UNITED STATES PATENT AND TRADEMARK OFFICE

Commissioner for Patents
United States Patent and Trademark Office
P.O. Box 1450
Alexandria, VA 22313-1450
www.uspto.gov

GEORGE A. ROLSTON
45 SHEPPARD AVE EAST
SUITE 900
TORONTO ON M2N5W-9 CA CANADA

COPY MAILED
NOV 14 2006
OFFICE OF PETITIONS

In re Application of	:	
Robert Peter Ignagni	:	
Application No. 29/196398	:	ON PETITION
Filing or 371(c) Date12/30/2003	:	
Title of Invention:	:	
RAILING BRACKET RADIUSSED	:	

This is a decision on the Petition for Revival of an Application for Patent Abandoned Unintentionally Under 37 C.F.R. § 1.137(b), March 30, 2006.

This Petition is hereby **granted**.

The above-identified application became abandoned for failure to timely reply to the Office communication, mailed March 18, 2005. The Notice set a two (2) month period for reply. Extensions of time under 37 CFR 1.136(a) were available. Applicant filed an incorrect set of drawings on May 2, 2005. No complete and proper reply having been received, the application became abandoned on May 19, 2005. A Notice of Abandonment was mailed February 28, 2006.

Applicant files the instant petition and drawings in response to the Office communication. Accordingly, the petition is granted.

This application is being forwarded to Technology Center Art Unit 2915 for processing of the response.

Applicant also filed an extension of time request and fee; however, no extension of time is available once the application is abandoned. A refund of the extension of time fee has been scheduled via Treasury Check.

Telephone inquiries concerning this decision should be directed to the undersigned at (571) 272-3232.

Derek L. Woods
Attorney
Office of Petitions

UNITED STATES PATENT AND TRADEMARK OFFICE

Commissioner for Patents
United States Patent and Trademark Office
P.O. Box 1450
Alexandria, VA 22313-1450
www.uspto.gov

COPY MAILED

AUG 01 2006

OFFICE OF PETITIONS

MERCHANT & GOULD PC
P.O. BOX 2903
MINNEAPOLIS, MN 55402-0903

In re Application of :
Smit : DECISION GRANTING PETITION
Application No. 29/196,583 : UNDER 37 CFR 1.137(b)
Filed: December 29, 2003 :
Atty. Dkt. No.: 09424.0221US01 :

This decision is in response to the petition under 37 CFR 1.137(b), filed April 11, 2006.

The petition is **GRANTED**.

The above-identified application became abandoned April 12, 2005 for failure to timely submit a proper reply to the Notice of Allowance (Notice) mailed January 11, 2005. The Notice set a three month statutory period of time for reply. Notice of Abandonment was mailed March 20, 2006.

A grantable petition under 37 CFR 1.137(b) requires submission of: (1) the reply required to the outstanding Office action or notice, unless previously filed; (2) the petition fee as set forth in § 1.17(m); (3) a statement that the entire delay in filing the required reply from the due date for the reply until the filing of a grantable petition pursuant to this paragraph was unintentional. The Director may require additional information where there is a question whether the delay was unintentional; and (4) any terminal disclaimer (and fee as set forth in § 1.20(d)) required pursuant to 37 CFR 1.137(d).

The instant petition has been reviewed and found in compliance with the provisions of 37 CFR 1.137(b). Accordingly, the failure to timely submit a proper reply to the Notice is accepted as having been unintentionally delayed.

This application is being forwarded to the Office of Patent Publication for further processing.

Telephone inquiries regarding this decision should be directed to the undersigned at (571) 272-3205.

Alesia M. Brown
Petitions Attorney
Office of Petitions

UNITED STATES PATENT AND TRADEMARK OFFICE

Commissioner for Patents
United States Patent and Trademark Office
P.O. Box 1450
Alexandria, VA 22313-1450
www.uspto.gov

MOORE & VAN ALLEN PLLC
P.O. BOX 13706
Research Triangle Park NC 27709

COPY MAILED

MAR 17 2005

OFFICE OF PETITIONS

In re Application of

Hart, et al.

Application No. 29/196,609

Filed: December 31, 2003

Attorney Docket No. 014033-000034

: DECISION ON

: PETITION

This is a decision on the petition under 37 CFR 1.137(b), filed February 11, 2005, to revive the above-identified application.

The petition is **granted**.

This application became abandoned on November 13, 2004, for failure to file timely new corrected drawings as required by the Notice of Allowability mailed August 12, 2004. The aforementioned notice set forth a three (3) month statutory period for reply. No reply was received within the allowable period. A Notice of Abandonment was mailed on January 20, 2005.

The new corrected drawings, filed February 11, 2005, are noted.

The application is being forwarded to Technology Center 2900, GAU 2911 for response to the amendment filed February 11, 2005.

Telephone inquiries concerning this matter may be directed to the undersigned at (571) 272-3222.

Kenya A. McLaughlin
Petitions Attorney
Office of Petitions

UNITED STATES PATENT AND TRADEMARK OFFICE

COMMISSIONER FOR PATENTS
UNITED STATES PATENT AND TRADEMARK OFFICE
P.O. BOX 1450
ALEXANDRIA, VA 22313-1450
www.uspto.gov

John K. Kim
McCarter & English, LLP
Four Gateway Center
100 Mulberry Street
Newark, NJ 07102

COPY MAILED

OCT 27 2004

OFFICE OF PETITIONS

In re Application of	:
Fedorov, et al.	: DECISION GRANTING STATUS
Application No. 29/196,620	: UNDER 37 CFR 1.47(a)
Filed: December 31, 2003	:
Atty. Dkt. No.: ROSE ART-40085	:
For: BOARD ASSEMBLY WITH	:
STORAGE POCKET	:

This decision is in response to the petition under 37 CFR 1.47(a), filed September 13, 2004.

The petition is **GRANTED**.

Petitioner has shown that inventor Gennadi Fedorov has refused to execute the declaration for the above-identified application after having been presented with the application papers.

The above-identified application and papers have been reviewed and found in compliance with 37 CFR 1.47(a). This application is hereby accorded Rule 1.47(a) status.

As provided in Rule 1.47(c), this Office will forward notice of this application's filing to the non-signing inventors at the addresses given in the petition. Notice of the filing of this application will also be published in the Official Gazette.

After this decision is mailed, the above-identified application will be returned to the Office of Initial Patent Examination for further processing.

Telephone inquiries regarding this decision should be directed to the undersigned at (571) 272-3205.

Alesia M. Brown
Petitions Attorney
Office of Petitions

UNITED STATES PATENT AND TRADEMARK OFFICE

COMMISSIONER FOR PATENTS
UNITED STATES PATENT AND TRADEMARK OFFICE
P.O. BOX 1450
ALEXANDRIA, VA 22313-1450
www.uspto.gov

Mr. Gennadi Fedorov
20 Deer Run
Andover, New Jersey 07821

COPY MAILED

OCT 27 2004

OFFICE OF PETITIONS

In re Application of	:	
Fedorov, et al.	:	
Application No. 29/196,620	:	LETTER
Filed: December 31, 2003	:	
Docket No.: ROSE ART-40085	:	
For: BOARD ASSEMBLY WITH	:	
STORAGE POCKET	:	

Dear Sir:

You are named as an inventor in the above-identified United States patent application filed under the provisions of 35 U.S.C. 116 (United States Code) and 37 C.F.R. § 1.47(a), Rules of Practice in Patent Cases. Should a patent be granted on the application you will be designated therein as a joint inventor.

As a named inventor you are entitled to inspect any paper in the file wrapper of the application, order copies of all or any part thereof (at a prepaid cost as per 37 C.F.R. § 1.19) or make your position of record in the application. Alternatively, you may arrange to do any of the preceding through a registered patent attorney or agent presenting written authorization from you. If you care to join the application, counsel of record (see below) would presumably assist you. Joining in the application would entail the filing of an appropriate oath or declaration by you pursuant to 37 C.F.R. § 1.63.

Telephone inquiries regarding this communication should be directed to the undersigned at (571) 272-3205. Requests for information regarding your application should be directed to the File Information Unit at (703) 308-2733. Information regarding how to pay for and order a copy of the application, or a specific paper in the application, should be directed to Certification Division at (703) 308-9726 or 1-800-972-6382 (outside the Washington D.C. area).

Telephone inquiries regarding this matter should be directed to the undersigned at (571) 272-3205.

Alesia M. Brown
Senior Petitions Attorney
Office of Petitions

UNITED STATES PATENT AND TRADEMARK OFFICE

Commissioner for Patents
United States Patent and Trademark Office
P.O. Box 1450
Alexandria, VA 22313-1450
www.uspto.gov

H. ADRIAN OLIPHANT
3538 BELVEDERE WAY
CORONA CA 92882

COPY MAILED

NOV 3 0 2005

OFFICE OF PETITIONS

In re Application of
H. Adrian Oliphant
Application No. 29/196,628
Filed: January 2, 2004
Title of Invention: **BUG-OUT PET DISH**

ON PETITION

This is a decision on the petition filed September 21, 2005 under 37 CFR 1.137(b),[1] to revive the above-identified application.

The petition under 37 CFR 1.137 (b) is **DISMISSED**.

Any further petition to revive the above-identified application must be submitted within TWO (2) MONTHS from the mail date of this decision. Extensions of time under 37 CFR 1.136(b) are permitted. The reconsideration request should include a cover letter entitled "Petition under 37 CFR 1.137." This is **not** final agency action within the meaning of 5 U.S.C. § 704.

This application became abandoned June 13, 2005 for failure to timely pay the issue fee on or before June 10, 2005. A Notice of Allowability was mailed on March 10, 2005 and required the filing of corrected drawings. The corrected drawings were also not received in the USPTO by June 10, 2005. Accordingly, the Notice of Abandonment was mailed on August 22, 2005.

While the issue fee and corrected drawings have been submitted with the instant

---

[1] Effective December 1, 1997, the provisions of 37 CFR 1.137(b) now provide that where the delay in reply was unintentional, a petition may be filed to revive an abandoned application or a lapsed patent pursuant to 37 CFR 1.137(b). A grantable petition filed under the provisions of 37 CFR 1.137(b) must be accompanied by:

(1) the required reply, unless previously filed. In a nonprovisional application abandoned for failure to prosecute, the required reply may be met by the filing of a continuing application. In a nonprovisional application filed on or after June 8, 1995, and abandoned for failure to prosecute, the required reply may also be met by the filing of a request for continued examination in compliance with § 1.114. In an application or patent, abandoned or lapsed for failure to pay the issue fee or any portion thereof, the required reply must be the payment of the issue fee or any outstanding balance thereof.

(2) the petition fee as set forth in 37 CFR 1.17(m);

(3) a statement that the entire delay in filing the required reply from the due date for the reply until the filing of a grantable petition pursuant to 37 CFR 1.137(b) was unintentional. The Commissioner may required additional information where there is a question whether the delay was unintentional; and

(4) any terminal disclaimer (and fee as set forth in 37 CFR 1.20(d)) required pursuant to 37 CFR 1.137(c)).

petition, the petition does not satisfy requirements (1) and (4) of the regulation.

Applicant's submission of annotated drawings does not appear to be in compliance with 37 CFR 1.121(d). See also MPEP 608.02(t) and petitioner must submit a Terminal Disclaimer with any renewed petition since this is a design application. **Petitioner should note that submission of any renewed petition without the required reply will be construed as intentional delay.**

Further correspondence with respect to this matter should be addressed as follows:

By mail: Mail Stop Petitions
Commissioner for Patents
P.O. Box 1450
Alexandria VA 22313-1450

By FAX: (571) 273-8300
ATTN: Office of Petitions

Telephone inquiries concerning this matter may be directed to the undersigned Petitions Attorney at (571) 272-3212.

Patricia Faison-Ball

Patricia Faison-Ball
Senior Petitions Attorney
Office of Petitions

UNITED STATES PATENT AND TRADEMARK OFFICE

Commissioner for Patents
United States Patent and Trademark Office
P.O. Box 1450
Alexandria, VA 22313-1450
www.uspto.gov

COPY MAILED

FEB 0 8 2006

OFFICE OF PETITIONS

H. ADRIAN OLIPHANT
3538 BELVEDERE WAY
CORONA CA 92882

In re Application of :
H. Adrian Oliphant :
Application No. 29/196,628 : ON PETITION
Filed: January 2, 2004 :
Title of Invention: **BUG-OUT PET DISH** :

This is a decision on the renewed petition filed January 19, 2006 under 37 CFR 1.137(b),[1] to revive the above-identified application.

The petition under 37 CFR 1.137 (b) is **GRANTED**.

This application became abandoned June 13, 2005 for failure to timely pay the issue fee on or before June 10, 2005. Also, a Notice of Allowability was mailed on March 10, 2005 and required the filing of corrected drawings. The corrected drawings were also not received in the USPTO by June 10, 2005. Accordingly, the Notice of Abandonment was mailed on August 22, 2005. A petition filed September 21, 2005 was dismissed in a decision mailed November 30, 2005 because applicant's submission of annotated drawings was not in compliance with 37 CFR 1.121(d) and because pursuant to MPEP 608.02(t), a required Terminal Disclaimer was not submitted with the petition.

Comes now petitioner with drawings which have been reviewed and appear to be in compliance, and with a Terminal Disclaimer. All other requirements under 37 CFR 1.137(b) having been met, this matter is being referred to the Publishing Division to be processed into a patent.

Telephone inquiries concerning this matter may be directed to the undersigned Petitions Attorney at (571) 272-3212.

Patricia Faison-Ball

Patricia Faison-Ball
Senior Petitions Attorney
Office of Petitions

---

[1]Effective December 1, 1997, the provisions of 37 CFR 1.137(b) now provide that where the delay in reply was unintentional, a petition may be filed to revive an abandoned application or a lapsed patent pursuant to 37 CFR 1.137(b). A grantable petition filed under the provisions of 37 CFR 1.137(b) must be accompanied by:

(1) the required reply, unless previously filed. In a nonprovisional application abandoned for failure to prosecute, the required reply may be met by the filing of a continuing application. In a nonprovisional application filed on or after June 8, 1995, and abandoned for failure to prosecute, the required reply may also be met by the filing of a request for continued examination in compliance with § 1.114. In an application or patent, abandoned or lapsed for failure to pay the issue fee or any portion thereof, the required reply must be the payment of the issue fee or any outstanding balance thereof.

(2) the petition fee as set forth in 37 CFR 1.17(m);

(3) a statement that the entire delay in filing the required reply from the due date for the reply until the filing of a grantable petition pursuant to 37 CFR 1.137(b) was unintentional. The Commissioner may required additional information where there is a question whether the delay was unintentional; and

(4) any terminal disclaimer (and fee as set forth in 37 CFR 1.20(d)) required pursuant to 37 CFR 1.137(c)).

UNITED STATES PATENT AND TRADEMARK OFFICE

Commissioner for Patents
United States Patent and Trademark Office
P.O. Box 1450
Alexandria, VA 22313-1450
www.uspto.gov

LOCKE LIDDELL & SAPP LLP
ATTN. DOCKETING
600 TRAVIS #3400
HOUSTON TX 77002

COPY MAILED

AUG 30 2006

OFFICE OF PETITIONS

In re Application of
Kiyo Hoshino :
Application No. 29/196,748 : ON PETITION
Filed: January 5, 2004 :
Attorney Docket Number: 021827-036US :

This is a decision on the petition, filed April 17, 2006 under 37 CFR 1.137(b)[1], to revive the above identified application.

The petition is **GRANTED**.

This application became abandoned June 8, 2005 for failure to pay the issue fee. Accordingly, a Notice of Abandonment was mailed March 17, 2006.

All other requirements of 37 CFR 1.137(b), including the filing of a terminal disclaimer, having now been met, this matter is being referred to the Publishing Division to be processed into a patent.

Telephone inquiries concerning this matter may be directed to the undersigned Petitions Attorney at (571) 272-3212.

Patricia Faison-Ball
Senior Petitions Attorney
Office of Petitions

---

[1]Effective December 1, 1997, the provisions of 37 CFR 1.137(b) now provide that where the delay in reply was unintentional, a petition may be filed to revive an abandoned application or a lapsed patent pursuant to 37 CFR 1.137(b). A grantable petition filed under the provisions of 37 CFR 1.137(b) must be accompanied by:

(1) the required reply, unless previously filed. In a nonprovisional application abandoned for failure to prosecute, the required reply may be met by the filing of a continuing application. In an application or patent, abandoned or lapsed for failure to pay the issue fee or any portion thereof, the required reply must be the payment of the issue fee or any outstanding balance thereof.

(2) the petition fee as set forth in 37 CFR 1.17(m);

(3) a statement that the entire delay in filing the required reply from the due date for the reply until the filing of a grantable petition pursuant to 37 CFR 1.137(b) was unintentional. The Commissioner may required additional information where there is a question whether the delay was unintentional; and

(4) any terminal disclaimer (and fee as set forth in 37 CFR 1.20(d)) required pursuant to 37 CFR 1.137(c)).

OIPE JC32
JAN 2 1 2005
PATENT & TRADEMARK OFFICE

imiis

10 January 2005

SPECIAL PROCEDURES SUBMISSION

DFW
FILE COPY
PETITION GRANTED
FEB 1 8 2005
William Krynski
Special Program Examiner
TC 1700
FEB 1 8 2005
FEB 1 8 2005

Commissioner of Patents
P O Box 1450
Alexandria
Virginia
22313 / 1450
USA

By fax to: 001 703 872 9306
By post to: Address shown above
Pages: 3 total

2913
Lieberman

Dear Sir / Madam,

US design patent application no 29/196772

This application was filed on 5 January 2004, on my behalf by attorney Dennis A Gross, of DBA The Hill Form. I am writing to file a petition to make special this application owing to actual infringement. On 17 December 2004 an advert in Beauty Times (attached) alerted me to the existence of the Omega Part, 'The Open Self Part Wig', available from a New Jersey-based company called Modu Trading.

The claims of my application are directed to a single invention, the NewHair™ wig. A rigid comparison of the infringing device, the Omega Part, 'The Open Self Part Wig' shown in the Beauty Times advert, unquestionably infringes the claims of my application for my NewHair™ wig.

In filing my US application, I submitted the same claims as my UK design patents:
(1) Design patent 3012207, granted 15 April 2004
(2) Design patent 3015055, granted 5 November 2004
(3) Design patent 3015056, granted 5 November 2004

My US application is of the same scope to the claims of the UK granted design patents. In order to grant my design patents in the UK, a pre-examination search that satisfies your requirements has already been made by the UK patent office.

I served the infringing party, Modu Trading, with notice by writing to them on 29 December 2004 (attached).

I have sent a cheque in the post (express delivery) for the fee of $130.00 (set forth in the MPEP Rule 37 CFR 1.17(h)), made payable to Director of the United States Patent and Trademark Office.

If you have any questions or require any further information from me, please let me know.

Many thanks in advance for all your assistance.

Yours sincerely

Simi Belo, Imiis Limited
Cell: +44 (0) 7966 170 875 Switchboard: +44 (0) 845 056 9716
Email: simi@imiis.com Fax: +44 (0) 845 367 3137

Attached: (1) Advert for Omega Part, 'The Open Self Part Wig' in Beauty Times magazine
(2) Letter to Modu Trading 29 December 2004

01/25/2005 SSITHIB1 00000028 29196772
01 FC:1464 130.00 OP

Imiis Limited
PO Box 43858
London NW6 2WP UK

T: +44 (0) 845 056 9316
F: +44 (0) 20 7372 9706
E: enquiries@imiis.com
www.imiis.com

NewHair™
from Imiis

Registered in the UK no 4891221

UNITED STATES PATENT AND TRADEMARK OFFICE

Commissioner for Patents
United States Patent and Trademark Office
P.O. Box 1450
Alexandria, VA 22313-1450
www.uspto.gov

KNOBBE MARTENS OLSON & BEAR
2040 MAIN STREET
FOURTEENTH FLOOR
IRVINE, CA 92614

COPY MAILED

SEP 10 2004

OFFICE OF PETITIONS

In re Application of	:	
Charbel Karam	:	
Application No. 29/196,774	:	NOTICE
Filed: January 5, 2004	:	
Attorney Docket No. ZACSE1.001DUS	:	

This is a notice regarding your request for acceptance of a fee deficiency submission under 37 CFR 1.28. On September 1, 1998, the Court of Appeals for the Federal Circuit held that 37 CFR 1.28(c) is the sole provision governing the time for correction of the erroneous payment of the issue fee as a small entity. **See DH Technology v. Synergystex International, Inc. 154 F.3d 1333, 47 USPQ2d 1865 (Fed. Cir. Sept. 1, 1998).**

The Office no longer investigates or rejects original or reissue applications under 37 CFR 1.56. **1098 Off. Gaz. Pat. Office 502 (January 3, 1989)**. Therefore, nothing in this Notice is intended to imply that an investigation was done.

Your fee deficiency submission under 37 CFR 1.28 is hereby **ACCEPTED**.

Inquiries related to this communication should be directed to the Office of Petitions Staff at (703) 305-9285.

This matter is being referred to Technology Center AU 2913.

Wan Laymon

Wan Laymon
Petitions Examiner
Office of Petitions
Office of the Deputy Commissioner
for Patent Examination Policy

UNITED STATES PATENT AND TRADEMARK OFFICE

Commissioner for Patents
United States Patent and Trademark Office
P.O. Box 1450
Alexandria, VA 22313-1450
www.uspto.gov

COPY MAILED
FEB 13 2006
OFFICE OF PETITIONS

BACHMAN & LAPOINTE
900 CHAPEL STREET
SUITE 1201
NEW HAVEN CT 06510

In re Application of	:	
Jens Sorenson	:	
Application No. 29/196,946	:	ON PETITION
Filed: January 7, 2004	:	
Attorney Docket No. 03-738	:	

This is a decision on the petition, filed September 19, 2005, under 37 CFR 1.181(a) to Withdraw Holding of Abandonment.

The petition is **GRANTED**.

The application was held abandoned for failure to timely reply to the Notice To File Missing Parts Of Nonprovisional Application mailed March 19, 2004.

The petition states that the application had been assigned to an incorrect customer number and that the Notice was never received. To support this assertion, the petitioner has submitted a copy of the docket records covering the date upon which a response would have been docketed if the notice had been received. Additionally, a review of the application file shows the customer number as 34707 on the transmittal letter submitted upon filing of the above application on January 7, 2004.

In view of the above, the holding of abandonment is hereby withdrawn and the application restored to pending status.

Telephone inquiries concerning this decision should be directed to the undersigned at (571) 272-3208.

This matter is being forwarded to the Office of Initial Patent Examination.

Karen Creasy

Karen Creasy
Petitions Examiner
Office of Petitions

SPE RESPONSE FOR CERTIFICATE OF CORRECTION

Paper No.:12072005

DATE : December 7, 2005

TO SPE OF : ART UNIT 2913

SUBJECT : Request for Certificate of Correction on Patent No.: D505882

A response is requested with respect to the accompanying request for a certificate of correction.

Please complete this form and return with file, within **7** days to:
Certificates of Correction Branch - PK 3-910
Palm location **7590** - Tel. No. 305-8201

With respect to the change(s) requested, correcting Office and/or Applicant's errors, should the patent read as shown in the certificate of correction? No new matter should be introduced, nor should the scope or meaning of the claims be changed.

Thank You For Your Assistance **Certificates of Correction Branch**

The request for issuing the above-identified correction(s) is hereby:
Note your decision on the appropriate box.

☒ **Approved** **All** changes apply.

☐ **Approved in Part** Specify below which changes **do not** apply.

☐ **Denied** State the reasons for denial below.

Comments:

change the title to "flower pot" on the the cover page

Caron D. Veynar

SPE: Caron Veynar **Art Unit** 2913

UNITED STATES PATENT AND TRADEMARK OFFICE

Commissioner for Patents
United States Patent and Trademark Office
P.O. Box 1450
Alexandria, VA 22313-1450
www.uspto.gov

KLAUS J. BACH
4407 TWIN OAKS DRIVE
MURRYSVILLE PA 15668

COPY MAILED
DEC 1 2 2008

In re Application of :
Herbert Richter :
Application No. 29/197,001 : ON PETITION
Filed: January 8, 2004 :
Attorney Docket No.: RI 186-D :

This is a decision on the petition filed December 2, 2008 under 37 CFR 1.181 to withdraw the holding of abandonment for the above-identified application.

The petition under 37 CFR 1.181 is **GRANTED**.

The application was held abandoned on April 11, 2006, for failure to timely file corrected drawings in response to the Notice of Allowability mailed January 10, 2006. Accordingly, a Notice of Abandonment was mailed July 20, 2006.

Petitioner asserts that 1 sheet of drawings was mailed January 14, 2006 and provides as proof a copy of the transmittal with a certificate of mail dated January 14, 2006. Additionally, 1 sheet of drawings was included with the petition.

A search of the application file and the USPTO records does not reveal receipt of the drawings but in view of the evidence provided, the petition is compliant with 37 CFR 1.8(b) and accordingly, the abandonment is hereby withdrawn. No petition fee is necessary and none has been charged.

This matter will be referred to the Publishing Division for a review of the drawings submitted January 14, 2006 a copy of which has been submitted with the petition.

Telephone inquiries concerning this matter may be directed to the undersigned Petitions Attorney at (571) 272-3212.

Patricia Faison-Ball

Patricia Faison-Ball
Senior Petitions Attorney
Office of Petitions

UNITED STATES PATENT AND TRADEMARK OFFICE

COMMISSIONER FOR PATENTS
UNITED STATES PATENT AND TRADEMARK OFFICE
P.O. BOX 1450
ALEXANDRIA, VA 22313-1450
www.uspto.gov

KOLISCH HARTWELL, P.C.
520 S.W. YAMHILL STREET
SUITE 200
PORTLAND, OR 97204

COPY MAILED

DEC 06 2004

OFFICE OF PETITIONS

In re Application of :
Bjorn Refsum, et al. :
Application No. 29/197,028 : NOTICE
Filed: January 5, 2004 :
Attorney Docket No. OPA 315

This is a notice regarding your request for acceptance of a fee deficiency submission under 37 CFR 1.28. On September 1, 1998, the Court of Appeals for the Federal Circuit held that 37 CFR 1.28(c) is the sole provision governing the time for correction of the erroneous payment of the issue fee as a small entity. **See DH Technology v. Synergystex International, Inc. 154 F.3d 1333, 47 USPQ2d 1865 (Fed. Cir. Sept. 1, 1998).**

The Office no longer investigates or rejects original or reissue applications under 37 CFR 1.56. **1098 Off. Gaz. Pat. Office 502 (January 3, 1989)**. Therefore, nothing in this Notice is intended to imply that an investigation was done.

Your fee deficiency submission under 37 CFR 1.28 is hereby **ACCEPTED**.

Inquiries related to this communication should be directed to the Office of Petitions Staff at (571) 272-3201.

This file is being referred to Publishing Division.

Sherry D. Brinkley
Petitions Examiner
Office of Petitions
Office of the Deputy Commissioner
for Patent Examination Policy

UNITED STATES PATENT AND TRADEMARK OFFICE

COMMISSIONER FOR PATENTS
UNITED STATES PATENT AND TRADEMARK OFFICE
P.O. BOX 1450
ALEXANDRIA, VA 22313-1450
www.uspto.gov

KOLISCH HARTWELL, P.C.
520 S.W. YAMHILL STREET
SUITE 200
PORTLAND, OR 97204

COPY MAILED

DEC 17 2004

OFFICE OF PETITIONS

In re Application of	:	
Hilde Angelfoss Oxseth	:	
Application No. 29/197,030	:	NOTICE
Filed: January 5, 2004	:	
Attorney Docket No. OPA 314		

This is a notice regarding your request for acceptance of a fee deficiency submission under 37 CFR 1.28. On September 1, 1998, the Court of Appeals for the Federal Circuit held that 37 CFR 1.28(c) is the sole provision governing the time for correction of the erroneous payment of the issue fee as a small entity. **See DH Technology v. Synergystex International, Inc. 154 F.3d 1333, 47 USPQ2d 1865 (Fed. Cir. Sept. 1, 1998).**

The Office no longer investigates or rejects original or reissue applications under 37 CFR 1.56. **1098 Off. Gaz. Pat. Office 502 (January 3, 1989)**. Therefore, nothing in this Notice is intended to imply that an investigation was done.

Your fee deficiency submission under 37 CFR 1.28 is hereby **ACCEPTED**.

Inquiries related to this communication should be directed to the Office of Petitions Staff at (571) 272-3201.

This file is being forwarded to Technology Center 2914 for examination in due course.

Sherry D. Brinkley
Petitions Examiner
Office of Petitions
Office of the Deputy Commissioner
for Patent Examination Policy

UNITED STATES PATENT AND TRADEMARK OFFICE

Commissioner for Patents
United States Patent and Trademark Office
P.O. Box 1450
Alexandria, VA 22313-1450
www.uspto.gov

KOLISCH HARTWELL, P.C.
520 S.W. YAMHILL STREET
SUITE 200
PORTLAND, OR 97204

COPY MAILED

OCT 19 2004

OFFICE OF PETITIONS

In re Application of	:	
Refsum et al.	:	
Application No. 29/197,036	:	ON PETITION
Filed: January 5, 2004	:	
Attorney Docket No. OPA 317	:	

This is a notice regarding your request for acceptance of a fee deficiency submission under 37 CFR 1.28. On September 1, 1998, the Court of Appeals for the Federal Circuit held that 37 CFR 1.28(c) is the sole provision governing the time for correction of the erroneous payment of the issue fee as a small entity. **See DH Technology v. Synergystex International, Inc. 154 F.3d 1333, 47 USPQ2d 1865 (Fed. Cir. Sept. 1, 1998).**

The Office no longer investigates or rejects original or reissue applications under 37 CFR 1.56. **1098 Off. Gaz. Pat. Office 502 (January 3, 1989)**. Therefore, nothing in this Notice is intended to imply that an investigation was done.

Your fee deficiency submission under 37 CFR 1.28 is hereby **ACCEPTED**.

Inquiries related to this communication should be directed to the undersigned at (571) 272-3206.

Liana Chase

Liana Chase
Petitions Examiner
Office of Petitions
Office of the Deputy Commissioner
for Patent Examination Policy

UNITED STATES PATENT AND TRADEMARK OFFICE

Commissioner for Patents
United States Patent and Trademark Office
P.O. Box 1450
Alexandria, VA 22313-1450
www.uspto.gov

KOLISCH HARTWELL P.C.
520 S.W. YAMHILL STREET
SUITE 200
PORTLAND, OR 97204

8/4/05

In re Application of
Bjorn Refsum
Serial No.: 29/197,036
Filed: January 5, 2004
Attorney Docket No.: OPA 317

: PETITION DECISION

This is in response to applicant's Petition to Withdraw Holding of Abandonment, which is being treated as a Petition under 37 CFR 1.181, received March 28, 2005, based on having responded to the Office action.

This petition is **GRANTED.**

This application was held abandoned based on applicant's failure to fully respond to the Notice of Allowance mailed September 7, 2004. As no response was received by December 7, 2004, a Notice of Abandonment was mailed February 14, 2005. This petition followed.

Applicant has stated that a response was timely filed, and has submitted a copy of the Issue Fee Transmittal, which has a Certificate of Mailing or Transmission date of September 24, 2004.

The application will be forwarded to Publication Division for printing as a patent in due course.

Should there be any questions with respect to this decision, please contact Sandra Morris; by mail addressed to: Director, Technology Center 1700/2900, P.O. Box 1450, Alexandria, VA 22313-1450; or by telephone at (571) 272-2622 or by facsimile transmission at (571) 273-2622.

Jacqueline M. Stone

Jacqueline Stone
Director, Technology Center 1700/2900

UNITED STATES PATENT AND TRADEMARK OFFICE

Commissioner for Patents
United States Patent and Trademark Office
P.O. Box 1450
Alexandria, VA 22313-1450
www.uspto.gov

KOLISCH HARTWELL, P.C.
520 S.W. YAMHILL STREET
SUITE 200
PORTLAND, OR 97204

COPY MAILED
NOV 03 2004
OFFICE OF PETITIONS

In re Application of	:	
Refsum et al.	:	
Application No. 29/197,037	:	ON PETITION
Filed: January 5, 2004	:	
Attorney Docket No. OPA 318	:	

This is a notice regarding your request for acceptance of a fee deficiency submission under 37 CFR 1.28. On September 1, 1998, the Court of Appeals for the Federal Circuit held that 37 CFR 1.28(c) is the sole provision governing the time for correction of the erroneous payment of the issue fee as a small entity. **See DH Technology v. Synergystex International, Inc. 154 F.3d 1333, 47 USPQ2d 1865 (Fed. Cir. Sept. 1, 1998).**

The Office no longer investigates or rejects original or reissue applications under 37 CFR 1.56. **1098 Off. Gaz. Pat. Office 502 (January 3, 1989)**. Therefore, nothing in this Notice is intended to imply that an investigation was done.

Your fee deficiency submission under 37 CFR 1.28 is hereby **ACCEPTED**.

Inquiries related to this communication should be directed to the undersigned at (571) 272-3282.

Liana Chase

Liana Chase
Petitions Examiner
Office of Petitions
Office of the Deputy Commissioner
for Patent Examination Policy

UNITED STATES PATENT AND TRADEMARK OFFICE

Commissioner for Patents
United States Patent and Trademark Office
P.O. Box 1450
Alexandria, VA 22313-1450
www.uspto.gov

KOLISCH HARTWELL, P.C.
520 S.W. YAMHILL STREET
SUITE 200
PORTLAND, OR 97204

COPY MAILED

NOV 03 2004

OFFICE OF PETITIONS

In re Application of	:	
Oxseth, Hilde Angelfoss	:	
Application No. 29/197,038	:	ON PETITION
Filed: January 5, 2004	:	
Attorney Docket No. OPA 316	:	

This is a notice regarding your request for acceptance of a fee deficiency submission under 37 CFR 1.28. On September 1, 1998, the Court of Appeals for the Federal Circuit held that 37 CFR 1.28(c) is the sole provision governing the time for correction of the erroneous payment of the issue fee as a small entity. **See DH Technology v. Synergystex International, Inc. 154 F.3d 1333, 47 USPQ2d 1865 (Fed. Cir. Sept. 1, 1998).**

The Office no longer investigates or rejects original or reissue applications under 37 CFR 1.56. **1098 Off. Gaz. Pat. Office 502 (January 3, 1989)**. Therefore, nothing in this Notice is intended to imply that an investigation was done.

Your fee deficiency submission under 37 CFR 1.28 is hereby **ACCEPTED**.

Inquiries related to this communication should be directed to the undersigned at (571) 272-3282.

Liana Chase

Liana Chase
Petitions Examiner
Office of Petitions
Office of the Deputy Commissioner
for Patent Examination Policy

UNITED STATES PATENT AND TRADEMARK OFFICE

Commissioner for Patents
United States Patent and Trademark Office
P.O. Box 1450
Alexandria, VA 22313-1450
www.uspto.gov

NORRIS McLAUGHLIN & MARCUS
875 THIRD AVENUE
18TH FLOOR
NEW YORK, NY 10022

COPY MAILED
JAN 0 5 2006
OFFICE OF PETITIONS

In re Patent No. D509,892	:	
Issue Date: September 20, 2005	:	
Application No. 29/197,064	:	ON PETITION
Filed: January 9, 2004	:	
Attorney Docket No. 102792-240	:	

This is a decision on the petition filed October 19, 2005, which is being treated as a request under 37 CFR 3.81(b)[1] to correct the assignee on the front page of the above-identified patent by way of a Certificate of Correction.

The request is **granted**.

Telephone inquiries concerning this matter may be directed to the undersigned at (571) 272-3218. Any questions concerning the issuance of the Certificate of Correction should be directed to the Certificates of Correction Branch at (703) 305-8309.

The file is being forwarded to the Certificates of Correction Branch for issuance of the requested Certificate of Correction.

Frances Hicks
Petitions Examiner
Office of Petitions

---

[1] *See* Official Gazette of June 22, 2004

UNITED STATES PATENT AND TRADEMARK OFFICE

Commissioner for Patents
United States Patent and Trademark Office
P.O. Box 1450
Alexandria, VA 22313-1450
www.uspto.gov

NIKOLAI & MERSEREAU, P.A.
900 SECOND AVENUE SOUTH
SUITE 820
MINNEAPOLIS, MN 55402

COPY MAILED
OCT 0 2 2006
OFFICE OF PETITIONS

In re Patent No. D502316
:
Issue Date: March 1, 2005
:
Application No. 29/197,138
: ON PETITION
Filed: January 8, 2004
:
Attorney Docket No. CFP-015661(15745/430)

This is a decision on the petition filed July 8, 2005, which is being treated as a request under 37 CFR 3.81(b)[1] to correct data on the front page of the above-identified patent by way of Certificate of Correction.

The request is **granted**.

Deposit account 08-1265 will be charged $130.00 for the request.

Telephone inquiries concerning this matter may be directed to the undersigned at (571) 272-3222. Any questions concerning the issuance of the Certificate of Correction should be directed to the Certificate of Correction Branch at (703) 305-8309.

The file is being forwarded to the Certificate of Correction Branch for issuance of the requested Certificate of Correction.

Kenya A. McLaughlin
Petitions Attorney
Office of Petitions

[1] See *Official Gazette* of June 22, 2004.

UNITED STATES PATENT AND TRADEMARK OFFICE

Commissioner for Patents
United States Patent and Trademark Office
P.O. Box 1450
Alexandria, VA 22313-1450
www.uspto.gov

Paper No.

Terence P. O'Brien
Wilson Sporting Goods Co.
8700 W. Bryn Mawr Avenue
Chicago IL 60631

COPY MAILED

MAY 25 2007

OFFICE OF PETITIONS

In re Application of	:	
Lilly et al.	:	DECISION ON PETITION
Application No. 29/197,159	:	
Filed: January 12, 2004	:	
Attorney Docket No. WRO179	:	

This is a decision on the "PETITION TO WITHDRAW NOTICE OF ABANDONMENT BASED ON FAILURE TO TIMELY FILE A REPLY TO THE OFFICE COMMUNICATION DATED MAY 22, 2006 IN ACCORDANCE WITH 37 C.F.R. § 1.181" filed January 17, 2007.

The above-identified application became abandoned for failure to file a reply to the Office communication mailed May 22, 2006. This Office communication set a one-month period for reply, with extensions of time obtainable under § 1.136(a). No reply considered received and no extension obtained, the above-identified application became abandoned on June 23, 2006. A Notice of Abandonment was mailed on January 4, 2007.

In response, applicants timely filed the instant petition. Petitioner states that on August 14, 2006, applicants timely filed an Amendment in response to the Office action via Express Mail through the U.S. Postal Service. In support thereof, petitioner submitted a copy of their return postcard and the response.

A postcard receipt, which itemizes and properly identifies the items, which are being filed, serves as *prima facie* evidence of receipt in the Office of all items listed thereon on the date stamped thereon by the Office. See MPEP 503. A review of

petitioner's postcard receipt reveals that: 1) it was date stamped as received in the USPTO on August 14, 2006; 2) it specifically identifies the items being filed, including "Amendment Transmittal", "Replacement Drawings for Figures 1 through 4 (3 Sheets)" and "Amendment in Response to Off. Act. Dated May 22, 2006 (2 pages)" and 3) it lacks any annotation of non-receipt of any item denoted on the postcard. Thus, the evidence shows that the response was received on August 14, 2006. Further, a review of the response reveals that it included an authorization to charge the extension of time fee required for response within the second month to a Deposit Account. (Pursuant to this authorization the extension of time fee was previously charged). Accordingly, the response is considered timely filed on August 14, 2006.

In view thereof, the notice of abandonment mailed January 4, 2007 is hereby **VACATED**, and the holding of abandonment is hereby **WITHDRAWN**.

The petition under § 1.181 is **GRANTED**.

No fee is required on petition under § 1.181.

Technology Center AU 2912 has been advised of this decision. The application file is, thereby, forwarded to the Technology Center's technical staff to withdraw the holding of abandonment and for the examiner to consider the response resubmitted on petition filed January 17, 2007.

Telephone inquiries specific to this decision should be directed to the undersigned at (571) 272-3219.

Nancy Johnson
Senior Petitions Attorney
Office of Petitions

UNITED STATES PATENT AND TRADEMARK OFFICE

Commissioner for Patents
United States Patent and Trademark Office
P.O. Box 1450
Alexandria, VA 22313-1450
www.uspto.gov

MAY 20 2004

WELSH & FLAXMAN LLC
2450 CRYSTAL DRIVE, SUITE 112
ARLINGTON, VA 22202

In re Application of	:	
Anthony J. Antonious	:	DECISION ON PETITION
Serial No.: 29/197,176	:	
Filed: January 13, 2004	:	
For: Metalwood Type Golf Club Head	:	

This is in response to applicants' petition filed January 13, 2004, to make the above-identified application special under the provisions of 37 CFR 1.102(c), based on the age of the applicant.

Applicant has satisfied the provisions set forth in M.P.E.P. 708.02, IV. Therefore the petition is **GRANTED**.

The application will be forwarded to the examiner for action on the merits commensurate with this decision.

Should there be any questions with regard to this letter please contact John Kittle by letter addressed to the Director, Technology Center 3700/2900, P.O. Box 1450 Alexandria, VA 22313-1450 or by telephone at (703) 308-0873 or by facsimile transmission at (703) 308-3139.

John E. Kittle
Director,
Technology Center 3700/2900

UNITED STATES PATENT AND TRADEMARK OFFICE

Commissioner for Patents
United States Patent and Trademark Office
P.O. Box 1450
Alexandria, VA 22313-1450
www.uspto.gov

OLSON & HIERL, LTD.
36th Floor
20 North Wacker Drive
Chicago IL 60606

COPY MAILED

AUG 29 2005

OFFICE OF PETITIONS

In re Application of

D. Bernacchi, et al.

Application No. 29/197,209

Filed: January 9, 2004

Attorney Docket No. DB-D02

DECISION ON PETITION

This is a decision on the petition under 37 CFR 1.137(b), filed August 18, 2005, to revive the above-identified application.

The petition is **GRANTED**.

The above-cited application became abandoned for failure to reply in a timely manner to the non-final Office action mailed November 3, 2004, which set a shortened statutory period for reply of one (1) month from its mailing date. No extensions of time were obtained within the allowable period. Accordingly, the application became abandoned on December 4, 2004. A Notice of Abandonment was mailed on June 17, 2005.

The election filed August 18, 2005, is also noted.

The terminal disclaimer filed August 18, 2005 is also noted.

The application is being forwarded to Technology Center 2900, GAU 2912 for further processing.

Telephone inquiries concerning this decision should be directed to the undersigned at (571) 272-3222.

Kenya A. McLaughlin

Kenya A. McLaughlin
Petitions Attorney
Office of Petitions

UNITED STATES PATENT AND TRADEMARK OFFICE

Commissioner for Patents
United States Patent and Trademark Office
P.O. Box 1450
Alexandria, VA 22313-1450
www.uspto.gov

12-6-06

Patent No. : D518,292
Inventor(s) : Makoto Nakagawa
Issued : April 4, 2006
Title : CONTACT LENS CONTAINER FOR USE IN A REFRIGERATOR
Docket No. :

Re: Request for Certificate of Correction

Consideration has been given your request for the issuance of a certificate of correction for the above-identified patent under the provisions of 37 CFR 1.322 and/or 1.323.

Assignees' names and addresses (assignment data) printed in a patent are based *solely* on information supplied in the appropriate space for identifying the assignment data, i.e., item 3 of the Fee(s) Transmittal Form PTOL-85B. After payment of the issue fee, correction of assignment data submitted on the PTOL-85B can only be done by Certificate of Correction under 37 CFR 1.323, with a request under 37 CFR 3.81(b).

A request for a patent to be corrected to state the name of the assignee must:

A. state that the assignment was submitted for recordation as set forth in 37 CFR 3.11 before issuance of the patent;
B. include a request for a certificate of correction under 37 CFR 1.323 along with the fee set forth in 37 CFR 1.20(a); and
C. include the processing fee set forth in 37 CFR 1.17(i).

If the request is granted, Certificates of Correction Branch will be notified that a Certificate of Correction may be issued.
See Manual of Patent Examining Procedure, Section 1481.01 (Rev. 3) (Oct. 2005).

Applicant has not included items A and or C above, accordingly, the request for Certificate of Correction to add or change the assignee data is dismissed.
Any request under 37 CFR 3.81(b) should be directed to the following address or facsimile number:

By mail: Mail Stop PETITIONS
Commissioner for Patents
Post Office Box 1450
Alexandria, VA 22313-1450

By hand: Customer Service Window
Mail Stop Petitions
Randolph Building
401 Dulany Street
Alexandria, VA 22314

By fax: 571-273-8300
ATTN: Office of Petitions

If a fee (currently $100) was previously submitted for consideration of a Request for Certificate of Correction, under CFR 1.323, to correct assignment data, no additional fee is required.

In view of the foregoing, your request is hereby denied.

Eva James
For Cecelia Newman
Decisions & Certificates
of Correction Branch
(703) **308-9390 ext. 124** or (703) 305-8309

Rossi, Kimms & McDowell LLP
P.O. Box 826
Ashburn, Virginia, 20146-0826

ej

UNITED STATES PATENT AND TRADEMARK OFFICE

Commissioner for Patents
United States Patent and Trademark Office
P.O. Box 1450
Alexandria, VA 22313-1450
www.uspto.gov

COPY MAILED

JUL 06 2007

OFFICE OF PETITIONS

ROSSI, KIMMS & McDOWELL LLP.
P.O. BOX 826
ASHBURN VA 20146-0826

In re Patent No. D518,292

Issue Date: April 4, 2006

Application No. 29/197,213

Filed: January 9, 2004

Attorney Docket No. **KASA:030**

ON PETITION

This is a decision on the petition filed December 7, 2006, which is being treated as a request under 37 CFR 3.81(b)[1] to correct the assignee data on the front page of the above-identified patent by way of a Certificate of Correction.

The request is **granted**.

Telephone inquiries concerning this matter may be directed to the undersigned at (571) 272-3222. Any questions concerning the issuance of the Certificate of Correction should be directed to the Certificate of Correction Branch at (703) 305-8309.

The file is being forwarded to the Certificate of Correction Branch for issuance of the requested Certificate of Correction.

Kenya A. McLaughlin
Petitions Attorney
Office of Petitions

[1] See *Official Gazette* of June 22, 2004.

UNITED STATES PATENT AND TRADEMARK OFFICE

Commissioner for Patents
United States Patent and Trademark Office
P.O. Box 1450
Alexandria, VA 22313-1450
www.uspto.gov

FOLEY & LARDNER LLP
777 EAST WISCONSIN AVENUE
SUITE 3800
MILWAUKEE WI 53202-5308

COPY MAILED

FEB 15 2006

OFFICE OF PETITIONS

In re Application of	:	
Wasserman et al.	:	DECISION ACCORDING STATUS
Application No. 29/197,231	:	UNDER 37 CFR 1.47(a)
Filed: January 13, 2005	:	
Attorney Docket No. 062103-0459	:	

This is in response to the petition under 37 CFR 1.47(a), filed January 13, 2004.

The petition is granted.

Petitioner showed that Ronnie I. Matteucci, the non-signing inventor, constructively refused to join in the filing of the above-identified application after having been presented with the application papers via email and certified mail. In the Declaration of Facts, Todd A. Rathe stated he sent the application papers to Mr. Matteucci via email, as well as certified mail to his last known address. On November 15, 2003, Jan Matteucci signed the certified mail return receipt. Copies of the return receipt and a USPS Track and Confirm print out accompany the petition. Mr. Matteucci did not respond to the request to sign the declaration.

The above-identified application and papers have been reviewed and found in compliance with 37 CFR 1.47(a). This application is hereby accorded Rule 1.47(a) status. As provided in Rule 1.47(c), this Office will forward notice of this application's filing to the non-signing inventor at the address given in the present petition. Notice of the filing of this application will also be published in the Official Gazette.

The matter is being referred to the Office of Patent Publication.

Telephone inquiries related to this decision may be directed to the undersigned at (571) 272-3211.

Christina Tartera Donnell

Christina Tartera Donnell
Senior Petitions Attorney
Office of Petitions

UNITED STATES PATENT AND TRADEMARK OFFICE

Commissioner for Patents
United States Patent and Trademark Office
P.O. Box 1450
Alexandria, VA 22313-1450
www.uspto.gov

Ronnie I. Matteucci
W226 N2572 Oakwood Lane
Waukesha, WI 53186

COPY MAILED
FEB 15 2006
OFFICE OF PETITIONS

In re Application of :
Wasserman et al. :
Application No. 29/197,231 : LETTER
Filed: January 13, 2005 :
Attorney Docket No. 062103-0459 :

Dear Mr. Matteucci:

You are named as a joint inventor in the above-identified United States patent application filed under the provisions of 35 U.S.C. 116 (United States Code) and 37 CFR 1.47(a), Rules of Practice in Patent Cases. Should a patent be granted on the application you will be designated therein as a joint inventor.

As a named inventor you are entitled to inspect any paper in the file wrapper of the application, order copies of all or any part thereof (at a prepaid cost per 37 CFR 1.19) or make your position of record in the application. Alternatively, you may arrange to do any of the preceding through a registered patent attorney or agent presenting written authorization from you. If you care to join the application, counsel of record (see below) would presumably assist you. Joining in the application would entail the filing of an appropriate oath or declaration by you pursuant to 37 CFR 1.63.

Requests for information regarding your application should be directed to the File Information Unit at (703) 308-2733. Information regarding how to pay for and order a copy of the application, or a specific paper in the application, should be directed to Certification Division at (703) 308-9726 or 1-800-972-6382 (outside the Washington D.C. area).

C. T. Donnell
Christina Tartera Donnell
Senior Petitions Attorney
Office of Petitions

FOLEY & LARDNER LLP
777 EAST WISCONSIN AVENUE
SUITE 3800
MILWAUKEE WI 53202-5308

UNITED STATES PATENT AND TRADEMARK OFFICE

COMMISSIONER FOR PATENTS
UNITED STATES PATENT AND TRADEMARK OFFICE
P.O. BOX 1450
ALEXANDRIA, VA 22313-1450
www.uspto.gov
DIW Nov-05

3M INNOVATIVE PROPERTIES COMPANY
PO BOX 33427
ST. PAUL MN 55133-3427

COPY MAILED
NOV 29 2005
OFFICE OF PETITIONS

In re Application of	:	
Bozouklian et al.	:	
Application No. 29/197,242	:	DECISION ON PETITION
Filed: 13 January, 2004	:	
Atty Docket No. 58849US003	:	

This is a decision on the petition filed on 31 October, 2005, under 37 CFR 1.137(b),[1] to revive the above-identified application.

The petition is **GRANTED**.

---

[1] Effective December 1, 1997, the provisions of 37 CFR 1.137(b) now provide that where the delay in reply was unintentional, a petition may be filed to revive an abandoned application or a lapsed patent pursuant to 37 CFR 1.137(b). A grantable petition filed under the provisions of 37 CFR 1.137(b) must be accompanied by:

(1) the required reply, unless previously filed. In a nonprovisional application abandoned for failure to prosecute, the required reply may be met by the filing of a continuing application. In a nonprovisional utility or plant application filed on or after June 8, 1995, and abandoned for failure to prosecute, the required reply may also be met by the filing of a request for continuing examination in compliance with § 1.114. In an application or patent, abandoned or lapsed for failure to pay the issue fee or any portion thereof, the required reply must be the payment of the issue fee or any outstanding balance thereof. In an application abandoned for failure to pay the publication fee, the required reply must include payment of the publication fee.

(2) the petition fee as set forth in 37 CFR 1.17(m);

(3) a statement that the entire delay in filing the required reply from the due date for the reply until the filing of a grantable petition pursuant to 37 CFR 1.137(b) was unintentional. The Commissioner may required additional information where there is a question whether the delay was unintentional; and

(4) any terminal disclaimer (and fee as set forth in 37 CFR 1.20(d)) required pursuant to 37 CFR 1.137(c)).

The application became abandoned on 26 October, 2005, for failure to timely submit corrected drawings in response to the Notice of Allowability mailed on 25 July, 2005, which set a three (3) month shortened statutory period for reply. The filing of the present petition precedes the mailing of Notice of Abandonment.

Petitioners have submitted corrected drawings. The examiner has indicated that the drawings are acceptable.

The terminal disclaimer filed on 31 October, 2005, under 37 CFR 1.137(c) has been entered and made of record. Effective 8 September, 2000, 37 CFR 1.137(c)(1) has been added to state that a terminal disclaimer filed pursuant to this rule must dedicate to the public a terminal part of the term of any patent granted thereon equivalent to the lesser of: 1) the period of abandonment of the application; or 2) the period extending beyond twenty years from the date on which the application for patent was filed in the United States, or, if the application contains a specific reference to an earlier filed application(s) under 35 U.S.C. 120, 121, or 365(c).[2] Accordingly, the period of the terminal disclaimer filed on 31 October, 2005, will be equivalent to the lesser period (1) or (2), as noted above, for this application.

The application is being referred to the Publishing Division for processing into a patent.

Telephone inquiries concerning this matter may be directed to the undersigned at (571)272-3231.

DWood

Douglas I. Wood
Senior Petitions Attorney
Office of Petitions

[2] 65 Fed. Reg. 54,674 (2000).

UNITED STATES PATENT AND TRADEMARK OFFICE

Commissioner for Patents
United States Patent and Trademark Office
P.O. Box 1450
Alexandria, VA 22313-1450
www.uspto.gov

HODGSON RUSS LLP
ONE M & T PLAZA
SUITE 2000
BUFFALO, NY 14203-2391

COPY MAILED

NOV 1 0 2004

OFFICE OF PETITIONS

In re Application of :
Norris, et al. :
Application No. 29/197,275 : ON PETITION
Filed: January 13, 2004 :
Attorney Docket No. 17789.0045 :

This is a decision on the petition filed August 13, 2004, to waive the rules and accept the correction of the assignee, which has been treated as a petition under 37 CFR 1.182 to correct the assignee data on the issue fee transmittal.

The petition is granted.

The file and corrected assignee information will be forwarded to Publications, however, as the issue fee has been paid, the patent may issue before the correction can be placed on the patent. If this were to occur, applicant will have to file a request for a certificate of correction.

Telephone inquiries concerning this matter may be directed to the undersigned at (571)272-3228.

Edward J. Tannouse
Petitions Attorney
Office of Petitions
United States Patent and Trademark Office

UNITED STATES PATENT AND TRADEMARK OFFICE

Commissioner for Patents
United States Patent and Trademark Office
P.O. Box 1450
Alexandria, VA 22313-1450
www.uspto.gov

HODGSON RUSS LLP
ONE M & T PLAZA
SUITE 2000
BUFFALO, NY 14203-2391

COPY MAILED

NOV 1 2 2004

OFFICE OF PETITIONS

In re Application of	:	
Norris, et al.	:	
Application No. 29/197,275	:	ON PETITION
Filed: January 13, 2004	:	
Attorney Docket No. 17789.0045	:	

This is a decision on the petition filed August 13, 2004, to waive the rules and accept the correction of the assignee data on the issue fee transmittal. The decision on petition, mailed on November 10, 2004, is hereby vacated and replaced by the instant decision.

The petition is granted.

The file and corrected assignee information will be forwarded to Publications, however, as the issue fee has been paid, the patent may issue before the correction can be placed on the patent. If this were to occur, applicant will have to file a request for a certificate of correction.

Telephone inquiries concerning this matter may be directed to the undersigned at (571)272-3228.

Edward J. Tannouse
Petitions Attorney
Office of Petitions
United States Patent and Trademark Office

UNITED STATES PATENT AND TRADEMARK OFFICE

Commissioner for Patents
United States Patent and Trademark Office
P.O. Box 1450
Alexandria, VA 22313-1450
www.uspto.gov

PATENT & TRADEMARK COUNSEL
THE GILLETTE COMPANY
39TH FLOOR
PRUDENTIAL TOWER BLDG.
BOSTON, MA 02199

COPY MAILED

JUL 07 2006

OFFICE OF PETITIONS

In re Application of	:	
Gray et al.	:	
Application No. 29/197,334	:	ON PETITION
Filed: January 14, 2004	:	
Attorney Docket No. 8142	:	

This is a decision on the petition under 37 C.F.R. § 1.137(b), filed April 17, 2006, to revive the above-identified application.

The petition is **GRANTED.**

The petition satisfies the conditions for revival pursuant to the provisions of 37 CFR 1.137(b) in that (1) the reply in the form of corrected drawings; (2) the petition fee; (3) the required statement of unintentional delay; and (4) a terminal disclaimer and fee have been received. Accordingly, the response has been accepted as having been unintentionally delayed.

This matter is being referred to Technology Center 2900 for further examination on the merits.

Telephone inquiries regarding this decision should be directed to the undersigned at (571) 272-3282.

Liana Chase
Petitions Examiner
Office of Petitions

UNITED STATES PATENT AND TRADEMARK OFFICE

Commissioner for Patents
United States Patent and Trademark Office
P.O. Box 1450
Alexandria, VA 22313-1450
www.uspto.gov

KEITH KLINE, ESQ.
PRO-TECHTOR INTERNATIONAL SERVICES
20775 NORADA COURT
SARATOGA, CA 95070-3018

6/24/05

In re Application of
Wen Cheng Hsieh
Serial No.: 29/197,349
Filed: January 12, 2004
Attorney Docket No.: 1472004

: PETITION DECISION

This is a decision on the Petition to Revive under 37 CFR 1.137(b), received May 6, 2005, to revive an unintentionally abandoned application.

The petition is **DISMISSED**.

This application became abandoned for failure to respond to the Notice of Allowance and Issue Fee due, mailed November 12, 2004, which required formal drawings and the issue fee. As no response was received by February 14, 2005, a Notice of Abandonment was mailed April 8, 2005. This petition followed.

A grantable petition under 37 CFR 1.137(b), as revised December 1, 1997, requires four items: (1) a petition and petition fee; (2) a complete response if not earlier made; (3) a statement that the entire period of delay in prosecution was unintentional; and (4) a terminal disclaimer and disclaimer fee. Applicant's petition lacks items (2) and (4). A terminal disclaimer and fee is required for all design petitions (4), and applicant did not submit formal drawings, as required by the Examiner in the Notice of Allowance.

Any renewed petition in order to be considered timely must be filed within TWO MONTHS of the date of mailing of this decision.

Should there be any questions with respect to this decision, please contact Sandra Morris; by mail addressed to: Director, Technology Center 1700/2900, P.O. Box 1450, Alexandria, VA 22313-1450; or by telephone at (571) 272-2622.

Jacqueline M. Stone

Jacqueline Stone
Director, Technology Center 1700/2900

UNITED STATES PATENT AND TRADEMARK OFFICE

Commissioner for Patents
United States Patent and Trademark Office
P.O. Box 1450
Alexandria, VA 22313-1450
www.uspto.gov

PRO-TECHTOR INTERNATIONAL SERVICES
20775 NORADA COURT
SARATOGA, CA 95070

COPY MAILED

SEP 3 0 2005

OFFICE OF PETITIONS

In re Application of	:	
Wen Cheng Hsieh	:	
Application No. 29/197,349	:	ON PETITION
Filed: January 12, 2004	:	
Attorney Docket No. 1472004	:	

This is a decision on the renewed petition under 37 CFR 1.137(b), filed September 6, 2005, to revive the above-identified application.

The petition is **GRANTED.**

The above-identified application became abandoned for failure to submit the Issue fee and formal drawings in a timely manner in reply to the Notice of Allowance mailed November 12, 2004, which set a statutory period for reply of three (3) months. Accordingly, the above-identified application became abandoned on February 13, 2005.

Telephone inquiries concerning this decision should be directed to the undersigned at (571) 272-3210.

This matter is being referred to the Publishing Division for further processing.

Irvin Dingle
Petitions Examiner
Office of Petitions

UNITED STATES PATENT AND TRADEMARK OFFICE

UNITED STATES DEPARTMENT OF COMMERCE
United States Patent and Trademark Office
Address: COMMISSIONER FOR PATENTS
P.O. Box 1450
Alexandria, Virginia 22313-1450
www.uspto.gov

APPL NO.	FILING OR 371 (c) DATE	ART UNIT	FIL FEE REC'D	ATTY.DOCKET NO	DRAWINGS	TOT CLMS	IND CLMS
29/197,354	01/14/2004	2913	470	225935	13	1	1

CONFIRMATION NO. 3878

CORRECTED FILING RECEIPT

OC000000012372654

23460
LEYDIG VOIT & MAYER, LTD
TWO PRUDENTIAL PLAZA, SUITE 4900
180 NORTH STETSON AVENUE
CHICAGO, IL 60601-6780

Date Mailed: 04/15/2004

Receipt is acknowledged of this regular Patent Application. It will be considered in its order and you will be notified as to the results of the examination: Be sure to provide the U.S. APPLICATION NUMBER, FILING DATE, NAME OF APPLICANT, and TITLE OF INVENTION when inquiring about this application. Fees transmitted by check or draft are subject to collection. Please verify the accuracy of the data presented on this receipt. **If an error is noted on this Filing Receipt, please write to the Office of Initial Patent Examination's Filing Receipt Corrections, facsimile number 703-746-9195. Please provide a copy of this Filing Receipt with the changes noted thereon. If you received a "Notice to File Missing Parts" for this application, please submit any corrections to this Filing Receipt with your reply to the Notice. When the USPTO processes the reply to the Notice, the USPTO will generate another Filing Receipt incorporating the requested corrections (if appropriate).**

Applicant(s)

Kenneth D. Robinson, Laguna Niguel, CA;

Domestic Priority data as claimed by applicant

Foreign Applications

If Required, Foreign Filing License Granted: 03/24/2004

Projected Publication Date: None, application is not eligible for pre-grant publication

Non-Publication Request: No

Early Publication Request: No

Title

Preformed artificial nails and tips having flared free edge

Preliminary Class

D28

LICENSE FOR FOREIGN FILING UNDER
Title 35, United States Code, Section 184
Title 37, Code of Federal Regulations, 5.11 & 5.15

GRANTED

The applicant has been granted a license under 35 U.S.C. 184, if the phrase "IF REQUIRED, FOREIGN FILING LICENSE GRANTED" followed by a date appears on this form. Such licenses are issued in all applications where the conditions for issuance of a license have been met, regardless of whether or not a license may be required as set forth in 37 CFR 5.15. The scope and limitations of this license are set forth in 37 CFR 5.15(a) unless an earlier license has been issued under 37 CFR 5.15(b). The license is subject to revocation upon written notification. The date indicated is the effective date of the license, unless an earlier license of similar scope has been granted under 37 CFR 5.13 or 5.14.

This license is to be retained by the licensee and may be used at any time on or after the effective date thereof unless it is revoked. This license is automatically transferred to any related applications(s) filed under 37 CFR 1.53(d). This license is not retroactive.

The grant of a license does not in any way lessen the responsibility of a licensee for the security of the subject matter as imposed by any Government contract or the provisions of existing laws relating to espionage and the national security or the export of technical data. Licensees should apprise themselves of current regulations especially with respect to certain countries, of other agencies, particularly the Office of Defense Trade Controls, Department of State (with respect to Arms, Munitions and Implements of War (22 CFR 121-128)); the Office of Export Administration, Department of Commerce (15 CFR 370.10 (j)); the Office of Foreign Assets Control, Department of Treasury (31 CFR Parts 500+) and the Department of Energy.

NOT GRANTED

No license under 35 U.S.C. 184 has been granted at this time, if the phrase "IF REQUIRED, FOREIGN FILING LICENSE GRANTED" DOES NOT appear on this form. Applicant may still petition for a license under 37 CFR 5.12, if a license is desired before the expiration of 6 months from the filing date of the application. If 6 months has lapsed from the filing date of this application and the licensee has not received any indication of a secrecy order under 35 U.S.C. 181, the licensee may foreign file the application pursuant to 37 CFR 5.15(b).

UNITED STATES PATENT AND TRADEMARK OFFICE

DEC 02 2004

COMMISSIONER FOR PATENTS
UNITED STATES PATENT AND TRADEMARK OFFICE
P.O. BOX 1450
ALEXANDRIA, VA 22313-1450
www.uspto.gov

STURM & FIX LLP
206 SIXTH AVENUE
SUITE 1213
DES MOINES IA 50309-4076

In re Application of
Leroy L Peterson
Serial No.: 29/197,560
Filed: January 16, 2004
Attorney Docket No.: 3-1189-217

: PETITION DECISION

This is in response to applicant's Petition to Withdraw Abandonment, which is being treated as a Petition under 37 CFR 1.181, filed September 9, 2004, based on having responded to the Office action.

A review of the file history shows that a Notice of Allowance was mailed April 27, 2004, setting a three month statutory period to pay the Issue fee and submit formal drawings. The issue fee was received July 15, 2004; however, as no formal drawings were submitted by July 27, 2004, a Notice of Abandonment was mailed on September 1, 2004.

Applicant has provided a copy of the response, which was eventually matched with the application. Therefore, the response was timely filed, and the application was obviously abandoned by the Office in error.

Applicant's petition is **GRANTED.**

The application will be promptly forwarded to Publications to be printed as a patent in due course.

Should there be any questions with respect to this decision, please contact Sandra Morris; by mail addressed to: Director, Technology Center 3700/2900, P.O. Box 1450, Alexandria, VA 22313-1450; or by telephone at (571) 272-2622.

John Kittle
Director, Technology Center 3700/2900

UNITED STATES PATENT AND TRADEMARK OFFICE

DEC 02 2004

COMMISSIONER FOR PATENTS
UNITED STATES PATENT AND TRADEMARK OFFICE
P.O. BOX 1450
ALEXANDRIA, VA 22313-1450
www.uspto.gov

STURM & FIX LLP
206 SIXTH AVENUE
SUITE 1213
DES MOINES IA 50309-4076

In re Application of
Leroy L Peterson
Serial No.: 29/197,562
Filed: January 16, 2004
Attorney Docket No.: 3-1189-220

: PETITION DECISION

This is in response to applicant's Petition to Withdraw Abandonment, which is being treated as a Petition under 37 CFR 1.181, filed September 9, 2004, based on having responded to the Office action.

A review of the file history shows that a Notice of Allowance was mailed April 20 2004, setting a three month statutory period to pay the Issue fee and submit formal drawings. The issue fee was received July 15, 2004; however, as no formal drawings were submitted by July 20, 2004, a Notice of Abandonment was mailed on September 1, 2004.

Applicant has provided a copy of the response, which was eventually matched with the application. Therefore, the response was timely filed, and the application was obviously abandoned by the Office in error.

Applicant's petition is **GRANTED.**

The application will be promptly forwarded to Publications to be printed as a patent in due course.

Should there be any questions with respect to this decision, please contact Sandra Morris; by mail addressed to: Director, Technology Center 3700/2900, P.O. Box 1450, Alexandria, VA 22313-1450; or by telephone at (571) 272-2622.

John Kittle
Director, Technology Center 3700/2900

UNITED STATES PATENT AND TRADEMARK OFFICE

DEC 02 2004

COMMISSIONER FOR PATENTS
UNITED STATES PATENT AND TRADEMARK OFFICE
P.O. BOX 1450
ALEXANDRIA, VA 22313-1450
www.uspto.gov

STURM & FIX LLP
206 SIXTH AVENUE
SUITE 1213
DES MOINES IA 50309-4076

In re Application of
Leroy L Peterson
Serial No.: 29/197,563
Filed: January 16, 2004
Attorney Docket No.: 3-1189-219

: PETITION DECISION

This is in response to applicant's Petition to Withdraw Abandonment, which is being treated as a Petition under 37 CFR 1.181, filed September 9, 2004, based on having responded to the Office action.

A review of the file history shows that a Notice of Allowance was mailed April 20 2004, setting a three month statutory period to pay the Issue fee and submit formal drawings. The issue fee was received July 15, 2004; however, as no formal drawings were submitted by July 20, 2004, a Notice of Abandonment was mailed on September 1, 2004.

Applicant has provided a copy of the response, which was eventually matched with the application. Therefore, the response was timely filed, and the application was obviously abandoned by the Office in error.

Applicant's petition is **GRANTED.**

The application will be promptly forwarded to Publications to be printed as a patent in due course.

Should there be any questions with respect to this decision, please contact Sandra Morris; by mail addressed to: Director, Technology Center 3700/2900, P.O. Box 1450, Alexandria, VA 22313-1450; or by telephone at (571) 272-2622.

John Kittle
Director, Technology Center 3700/2900

UNITED STATES PATENT AND TRADEMARK OFFICE

COMMISSIONER FOR PATENTS
UNITED STATES PATENT AND TRADEMARK OFFICE
P.O. BOX 1450
ALEXANDRIA, VA 22313-1450
www.uspto.gov

LUMEN INTELLECTUAL PROPERTY SERVICES, INC.
2345 YALE STREET, 2ND FLOOR
PALO ALTO, CA 94306

In re Application of
Jianli Shen
Serial No.: 29/197,597
Filed: January 15, 2004
Attorney Docket No.: CNT-102/DES

: PETITION DECISION

This is a decision on applicant's petition to revive patent application under 37 CFR 1.137(b), received January 31, 2005, to revive an unintentionally abandoned application.

This application became abandoned for failure to fully respond to the Notice of Allowance mailed August 12, 2004, which set a three-month statutory period to pay the Issue fee. As no response was received by November 12, 2004, a Notice of Abandonment was mailed to applicant January 20, 2005. Applicant then filed this petition.

A grantable petition for a design application under 37 CFR 1.137(b), as revised December 1, 1997, requires four items: (1) a petition and petition fee; (2) a complete response if not earlier made; (3) a statement that the entire period of delay in prosecution was unintentional; and (4) a terminal disclaimer and disclaimer fee. The requirement for filing a terminal disclaimer (4) has been waived, as the Petition was filed within one month of the mailing of the Notice of Abandonment.

Applicant's petition is **GRANTED**.

The application will be forwarded to Publications to be printed as a patent in due course.

Should there be any questions with respect to this decision, please contact Sandra Morris; by mail addressed to: Director, Technology Center 1700/2900, P.O. Box 1450, Alexandria, VA 22313-1450; or by telephone at (571) 272-2622 or by facsimile transmission at (571) 273-2622.

JMStone

Jacqueline Stone
Director, Technology Center 1700/2900

UNITED STATES PATENT AND TRADEMARK OFFICE

Commissioner for Patents
United States Patent and Trademark Office
P.O. Box 1450
Alexandria, VA 22313-1450
www.uspto.gov

COPY MAILED

APR 11 2005

OFFICE OF PETITIONS

KODA & ANDROLIA
2029 CENTURY PARK EAST, SUITE 1140
LOS ANGELES, CA 90067

In re Application of :
Ikuo Ikegaki :DECISION ON PETITIONS
Application No. 29/197,612 :UNDER 37 CFR 1.314 AND
Filed: January 16, 2004 :37 CFR 1.55(a)(1)
Attorney Docket No. 37J 408 :

This is a decision on the petition under 37 CFR 1.314, filed February 7, 2005, to defer issuance of the above-identified application into a patent and on the petition under 37 CFR 55(a), filed March 15, 2005, for entry of priority papers submitted after the date the issue fee was paid.

The petition under 37 CFR 1.314 is **granted**.

The petition under 37 CFR 1.55(a)(1) is **granted**.

Receipt is acknowledged of papers submitted under 35 USC 119.

The priority papers are accepted as timely filed and have been placed of record in the file.

Petitioner is advised that the rule affecting the submission of a claim for priority of a certified priority document under 37 CFR 1.55(a) was changed effective November 7, 2000. In effect, the Office will permit applicants to file a priority claim or certified priority document with the processing fee set forth in 37 CFR 1.17(i) between the date the issue fee is paid and the date a patent is issued. The Office will, however, merely place such submission in the application file but will not attempt to determine whether the applicant has met the conditions of 35 USC 119(a)-(d) to make the priority claim information in the text of the patent. In such a situation, the patent will not contain the priority claim information. The patentee may request a certificate of correction under 35 U.S.C. § 255 and 1.323 and a determination of entitlement for such priority will be made after the patent is granted. See Federal Register/Vol. 65, No. 175, September 8, 2000, page 54622.

Nevertheless, since the instant petition is before the deciding official prior to issuance, action on the petition under 37 CFR 1.55(a) has been taken. However, if the printing of the patent has progressed to the point where the priority data cannot be included on the printed patent, petitioner may request a certificate of correction pursuant to the provisions of 37 CFR 1.323 and pay the required fee of $100 therefor.

Any questions concerning this decision on petition should be directed to the undersigned at (571) 272-3218. Any questions concerning the issuance of this application into a patent should be directed to Customer Services at (703) 308-6789.

The matter is being referred to Publishing Division.

Frances Hicks

Frances Hicks
Lead Petitions Examiner
Office of Petitions
Office of the Deputy Commissioner
for Patent Examination Policy

UNITED STATES PATENT AND TRADEMARK OFFICE

Commissioner for Patents
United States Patent and Trademark Office
P.O. Box 1450
Alexandria, VA 22313-1450
www.uspto.gov

PERKINS COIE
P.O. BOX 2168
MENLO PARK, CA 94026-2168

COPY MAILED

OCT 20 2004

OFFICE OF PETITIONS

In re Application of :
Charles Wade Albritton et al :
Application No. 29/197,615 : NOTICE
Filed: January 15, 2004 :
Attorney Docket No. 37469-8039.US01 :

This is a notice regarding your request for acceptance of a fee deficiency submission under 37 CFR 1.28. On September 1, 1998, the Court of Appeals for the Federal Circuit held that 37 CFR 1.28(c) is the sole provision governing the time for correction of the erroneous payment of the issue fee as a small entity. **See DH Technology v. Synergystex International, Inc. 154 F.3d 1333, 47 USPQ2d 1865 (Fed. Cir. Sept. 1, 1998).**

The Office no longer investigates or rejects original or reissue applications under 37 CFR 1.56. **1098 Off. Gaz. Pat. Office 502 (January 3, 1989)**. Therefore, nothing in this Notice is intended to imply that an investigation was done.

Your fee deficiency submission under 37 CFR 1.28 is hereby **ACCEPTED**.

Inquiries related to this communication should be directed to Wan Laymon at (571) 272-3220.

This matter is being referred to Publishing Division.

Wan Laymon
Petitions Examiner
Office of Petitions
Office of the Deputy Commissioner
for Patent Examination Policy

UNITED STATES PATENT AND TRADEMARK OFFICE

Commissioner for Patents
United States Patent and Trademark Office
P.O. Box 1450
Alexandria, VA 22313-1450
www.uspto.gov

PATTERSON & SHERIDAN, L.L.P.
3040 POST OAK BOULEVARD
SUITE 1500
HOUSTON TX 77056

COPY MAILED

JUN 11 2008

OFFICE OF PETITIONS

In re Application of	:	
Panosian, Michael	:	
Application No. 29/197,634	:	DECISION ON PETITION
Filed: January 16, 2004	:	
Attorney Docket No. CAHD/0010	:	

This is a decision on the petition under 37 C.F.R. § 1.137(b), filed May 15, 2008, to revive the above-identified application.

The petition is **DISMISSED**.

Any request for reconsideration must be submitted within TWO (2) MONTHS from the mail date of this decision. No further petition fee is required for the request. Extensions of time under 37 CFR 1.136(a) are permitted. The reconsideration request should include a cover letter entitled "Renewed Petition under 37 CFR 1.137(b)." This is **not** a final agency action within the meaning of 5 U.S.C. § 704.

A grantable petition under 37 CFR 1.137(b) must be accompanied by:
(1) the required reply,[1]
(2) the petition fee,
(3) a statement that the entire delay in filing the required reply from the due date for the reply until the filing of a grantable petition pursuant to 37 CFR 1.137(b) was unintentional, and
(4) a terminal disclaimer and fee if the application was filed on or before June 8, 1995 or if the application is a design application.

Where there is a question as to whether either the abandonment or the delay in filing a petition under 37 CFR 1.137 was unintentional, the Commissioner may require additional information.[2]

The instant petition lacks item(s) (4). Petitioner did submit the Issue Fee Transmittal with payment of the issue fee. However, since the instant application is a design application, a terminal disclaimer is required by 37 CFR 1.137(b). A blank form is enclosed for petitioner's convenience.

---

[1] In a nonprovisional application abandoned for failure to prosecute, the required reply may be met by the filing of a continuing application. In an application or patent, abandoned or lapsed for failure to pay the issue fee or any portion thereof, the required reply must be the payment of the issue fee or any outstanding balance thereof.

[2] See MPEP 711.03(c)(III)(C) and (D).

Further correspondence with respect to this matter should be addressed as follows:

By mail: Mail Stop PETITIONS
Commissioner for Patents
Post Office Box 1450
Alexandria, VA 22313-1450

By hand: Customer Window located at:

U.S. Patent and Trademark Office
Customer Service Window Randolph Building
401 Dulany Street
Alexandria, VA 22314

By fax: (571) 273-8300
ATTN: Office of Petitions

Any questions concerning this matter may be directed to the undersigned at (571) 272-3206.

Liana Walsh
Petitions Examiner
Office of Petitions

Enclosure: PTO/SB/63

PTO/SB/63 (01-08)
Approved for use through 06/30/2008. OMB 0651-0031
U.S. Patent and Trademark Office; U.S. DEPARTMENT OF COMMERCE
Under the Paperwork Reduction Act of 1995, no persons are required to a collection of information unless it displays a valid OMB control number.

TERMINAL DISCLAIMER TO ACCOMPANY PETITION

Docket Number (Optional)

In re Application of:

Name:

Application Number:

Filed:

For:

The owner*, _____ of _____ percent interest in the above-identified application hereby disclaims a terminal part of the term of any patent granted the above-identified application equivalent to: (1) if the above-identified application is a design application, the period of abandonment of the above-identified application, and (2) if the above-identified application is a utility or plant application, the lesser of: (a) the period of abandonment of the application; or (b) the period extending beyond twenty years from the date on which the above-identified application was filed in the United States or, if the application contains a specific reference to an earlier filed application(s) under 35 U.S.C. 120, 121, or 365(c), from the date on which the earliest such application was filed. This disclaimer also applies to any patent granted on a utility or plant application filed before June 8, 1995, or a design application, that contains a specific reference under 35 U.S.C. 120, 121, or 365(c) to the above-identified application. This disclaimer is binding upon the grantee, and its successors or assigns.

Check either box 1 or 2 below, if appropriate.

1. ☐ For submissions on behalf of an organization (e.g., corporation, partnership, university, government agency, etc.), the undersigned is empowered to act on behalf of the organization.
2. ☐ The undersigned is an attorney or agent of record. Registration Number_____.

Signature	Date
Typed or Printed Name	Telephone Number

☐ Terminal disclaimer fee under 37 CFR 1.20(d) included.

WARNING: Information on this form may become public. Credit card information should not be included on this form. Provide credit card information and authorization on PTO-2038.

* Statement under 37 CFR 3.73(b) is required if terminal disclaimer is signed by the assignee (owner). Form PTO/SB/96 may be used for making this certification. See MPEP § 324.

This collection of information is required by 37 CFR 1.137. The information is required to obtain or retain a benefit by the public which is to file (and by the USPTO to process) an application. Confidentiality is governed by 35 U.S.C. 122 and 37 CFR 1.11 and 1.14. This collection is estimated to take 12 minutes to complete, including gathering, preparing, and submitting the completed application form to the USPTO. Time will vary depending upon the individual case. Any comments on the amount of time you require to complete this form and/or suggestions for reducing this burden, should be sent to the Chief Information Officer, U.S. Patent and Trademark Office, U.S. Department of Commerce, P.O. Box 1450, Alexandria, VA 22313-1450. DO NOT SEND FEES OR COMPLETED FORMS TO THIS ADDRESS. **SEND TO: Commissioner for Patents, P.O. Box 1450, Alexandria, VA 22313-1450.**

If you need assistance in completing the form, call 1-800-PTO-9199 and select option 2.

Privacy Act Statement

The **Privacy Act of 1974 (P.L. 93-579)** requires that you be given certain information in connection with your submission of the attached form related to a patent application or patent. Accordingly, pursuant to the requirements of the Act, please be advised that: (1) the general authority for the collection of this information is 35 U.S.C. 2(b)(2); (2) furnishing of the information solicited is voluntary; and (3) the principal purpose for which the information is used by the U.S. Patent and Trademark Office is to process and/or examine your submission related to a patent application or patent. If you do not furnish the requested information, the U.S. Patent and Trademark Office may not be able to process and/or examine your submission, which may result in termination of proceedings or abandonment of the application or expiration of the patent.

The information provided by you in this form will be subject to the following routine uses:

1. The information on this form will be treated confidentially to the extent allowed under the Freedom of Information Act (5 U.S.C. 552) and the Privacy Act (5 U.S.C 552a). Records from this system of records may be disclosed to the Department of Justice to determine whether disclosure of these records is required by the Freedom of Information Act.
2. A record from this system of records may be disclosed, as a routine use, in the course of presenting evidence to a court, magistrate, or administrative tribunal, including disclosures to opposing counsel in the course of settlement negotiations.
3. A record in this system of records may be disclosed, as a routine use, to a Member of Congress submitting a request involving an individual, to whom the record pertains, when the individual has requested assistance from the Member with respect to the subject matter of the record.
4. A record in this system of records may be disclosed, as a routine use, to a contractor of the Agency having need for the information in order to perform a contract. Recipients of information shall be required to comply with the requirements of the Privacy Act of 1974, as amended, pursuant to 5 U.S.C. 552a(m).
5. A record related to an International Application filed under the Patent Cooperation Treaty in this system of records may be disclosed, as a routine use, to the International Bureau of the World Intellectual Property Organization, pursuant to the Patent Cooperation Treaty.
6. A record in this system of records may be disclosed, as a routine use, to another federal agency for purposes of National Security review (35 U.S.C. 181) and for review pursuant to the Atomic Energy Act (42 U.S.C. 218(c)).
7. A record from this system of records may be disclosed, as a routine use, to the Administrator, General Services, or his/her designee, during an inspection of records conducted by GSA as part of that agency's responsibility to recommend improvements in records management practices and programs, under authority of 44 U.S.C. 2904 and 2906. Such disclosure shall be made in accordance with the GSA regulations governing inspection of records for this purpose, and any other relevant (*i.e.*, GSA or Commerce) directive. Such disclosure shall not be used to make determinations about individuals.
8. A record from this system of records may be disclosed, as a routine use, to the public after either publication of the application pursuant to 35 U.S.C. 122(b) or issuance of a patent pursuant to 35 U.S.C. 151. Further, a record may be disclosed, subject to the limitations of 37 CFR 1.14, as a routine use, to the public if the record was filed in an application which became abandoned or in which the proceedings were terminated and which application is referenced by either a published application, an application open to public inspection or an issued patent.
9. A record from this system of records may be disclosed, as a routine use, to a Federal, State, or local law enforcement agency, if the USPTO becomes aware of a violation or potential violation of law or regulation.

UNITED STATES PATENT AND TRADEMARK OFFICE

Commissioner for Patents
United States Patent and Trademark Office
P.O. Box 1450
Alexandria, VA 22313-1450
www.uspto.gov

PATTERSON & SHERIDAN, L.L.P.
3040 POST OAK BOULEVARD
SUITE 1500
HOUSTON TX 77056

COPY MAILED

AUG 0 7 2008

OFFICE OF PETITIONS

In re Application of	:	
Panosian, Michael	:	
Application No. 29/197,634	:	ON PETITION
Filed: January 16, 2004	:	
Attorney Docket No. CAHD/0010	:	

This is a decision on the petition under 37 C.F.R. § 1.137(b), filed July 17, 2008, to revive the above-identified application.

The petition is **GRANTED**.

Petitioner has now satisfied the requirements under 37 CFR 1.137(b) with the submission of the terminal disclaimer and fee. The terminal disclaimer has been entered and is hereby accepted.

Telephone inquiries concerning this decision should be directed to the undersigned at (571) 272-3206.

This matter is being referred to the Office of Data Management for processing into a patent.

Liana Walsh
Petitions Examiner
Office of Petitions

UNITED STATES PATENT AND TRADEMARK OFFICE

Commissioner for Patents
United States Patent and Trademark Office
P.O. Box 1450
Alexandria, VA 22313-1450
www.uspto.gov

CALFEE HALTER & GRISWOLD, LLP
800 SUPERIOR AVENUE
SUITE 1400
CLEVELAND OH 44114

COPY MAILED

SEP 0 6 2005

OFFICE OF PETITIONS

In re Application of	:	
Jones, Ronald	:	
Application No. 29/197,637	:	ON PETITION
Filed: January 20, 2004	:	
Attorney Docket No. 27475/06987	:	

This is a decision on the petition filed August 1, 2005, requesting that the above-identified application be accorded a filing date of January 16, 2004, rather than the presently accorded date of January 20, 2004. The petition is properly treated as a petition under 37 CFR 1.10(c).

Applicant requests the earlier filing date on the basis that the application was purportedly deposited with the U.S. Postal Service (USPS) as Express Mail on January 16, 2004 pursuant to 37 CFR 1.10. In support, applicant has submitted a copy of Express Mail label No. EL 084753594 US showing a handwritten "date-in" of "January 16, 2004." The same Express Mail receipt number appears on the original "Design Patent Application Transmittal." Additionally, the Express Mail label number appears on the Certificate of Mailing by "Express Mail" and includes a statement of express mailing dated January 16, 2004 on the cover page for the application papers.

In view of the above evidence, it is concluded that the application was deposited as "Express Mail" with the USPS on January 16, 2004.

The petition is **GRANTED**.

This matter is being referred to the Publishing Division for processing into a patent.

Telephone inquiries concerning this matter may be directed Paralegal Liana Chase at (571) 272-3206.

Frances Hicks
Petitions Examiner
Office of Petitions
Office of the Deputy Commissioner
for Patent Examination Policy

UNITED STATES PATENT AND TRADEMARK OFFICE

Commissioner for Patents
United States Patent and Trademark Office
P.O. Box 1450
Alexandria, VA 22313-1450
www.uspto.gov

PERKINS COIE LLP
P.O. BOX 2168
MENLO PARK CA 94026

COPY MAILED

OCT 1 5 2004

OFFICE OF PETITIONS

In re Application of :
Charles W. Albritton et al :
Application No. 29/197,644 :
Filed: January 15, 2004 :
Attorney Docket No. 37469-8036.US01 :

NOTICE

This is a notice regarding your request for acceptance of a fee deficiency submission under 37 CFR 1.28. On September 1, 1998, the Court of Appeals for the Federal Circuit held that 37 CFR 1.28(c) is the sole provision governing the time for correction of the erroneous payment of the issue fee as a small entity. **See DH Technology v. Synergystex International, Inc. 154 F.3d 1333, 47 USPQ2d 1865 (Fed. Cir. Sept. 1, 1998).**

The Office no longer investigates or rejects original or reissue applications under 37 CFR 1.56. **1098 Off. Gaz. Pat. Office 502 (January 3, 1989)**. Therefore, nothing in this Notice is intended to imply that an investigation was done.

Your fee deficiency submission under 37 CFR 1.28 is hereby **ACCEPTED**.

Inquiries related to this communication should be directed to the undersigned at (571) 272-3208.

This file is being referred to Patent Publication.

Karen Creasy

Karen Creasy
Petitions Examiner
Office of Petitions
Office of the Deputy Commissioner
for Patent Examination Policy

UNITED STATES PATENT AND TRADEMARK OFFICE

Commissioner for Patents
United States Patent and Trademark Office
P.O. Box 1450
Alexandria, VA 22313-1450
www.uspto.gov

PERKINS COIE LLP
P.O. BOX 2168
MENLO PARK CA 94026

COPY MAILED

OCT 1 5 2004

OFFICE OF PETITIONS

NOTICE

In re Application of :
Charles W. Albritton et al :
Application No. 29/197,544 :
Filed: January 15, 2004 :
Attorney Docket No. 37469-8038.US01 :

This is a notice regarding your request for acceptance of a fee deficiency submission under 37 CFR 1.28. On September 1, 1998, the Court of Appeals for the Federal Circuit held that 37 CFR 1.28(c) is the sole provision governing the time for correction of the erroneous payment of the issue fee as a small entity. **See DH Technology v. Synergystex International, Inc. 154 F.3d 1333, 47 USPQ2d 1865 (Fed. Cir. Sept. 1, 1998).**

The Office no longer investigates or rejects original or reissue applications under 37 CFR 1.56. **1098 Off. Gaz. Pat. Office 502 (January 3, 1989)**. Therefore, nothing in this Notice is intended to imply that an investigation was done.

Your fee deficiency submission under 37 CFR 1.28 is hereby **ACCEPTED**.

Inquiries related to this communication should be directed to the undersigned at (571) 272-3208.

This file is being referred to Patent Publication.

Karen Creasy

Karen Creasy
Petitions Examiner
Office of Petitions
Office of the Deputy Commissioner
for Patent Examination Policy

UNITED STATES PATENT AND TRADEMARK OFFICE

COMMISSIONER FOR PATENTS
UNITED STATES PATENT AND TRADEMARK OFFICE
P.O. BOX 1450
ALEXANDRIA, VA 22313-1450
www.uspto.gov

HARNESS, DICKEY, & PIERCE, P.L.C
7700 BONHOMME, STE 400
ST. LOUIS, MO 63105

COPY MAILED

FEB 06 2006

OFFICE OF PETITIONS

In re Application of :
Conway et al. :
Application No. 29/197,678 :
Filed: January 16, 2004 :
Attorney Docket No. :
9858-000368 :

This is a decision in response to the petition under 37 CFR 1.137(b), filed September 1, 2005, to revive the above-identified application.

This Petition is hereby **granted**.

The above-identified application became abandoned for failure to timely and properly reply to the Notice of Allowability, mailed January 25, 2005. The Notice set a non-extendable three (3) month period for reply. No reply having been received, the application became abandoned April 26, 2005. A Notice of Abandonment was mailed on August 3, 2005.

With the instant petition, Applicant has completed the requirements for a grantable petition, which has been approved by the Examiner.

This application is being forwarded to Publishing Division for processing into a patent.

Telephone inquiries concerning this matter should be directed to the undersigned at (571) 272-3232.

Derek L. Woods
Attorney
Office of Petitions

UNITED STATES PATENT AND TRADEMARK OFFICE

Commissioner for Patents
United States Patent and Trademark Office
P.O. Box 1450
Alexandria, VA 22313-1450
www.uspto.gov

DAVID I. ROCHE
BAKER & MCKENZIE LLP
130 EAST RANDOLPH DRIVE
CHICAGO IL 60601

COPY MAILED

DEC 0 5 2007

OFFICE OF PETITIONS

In re Application of	:	
Berg et al.	:	
Application No. 29/197712	:	DECISION ON
Filing or 371(c) Date: 01/20/2004	:	PETITION
Title of Invention:	:	
PERCUSSION CASE		:

This is a decision on the Petition for Revival of an Application for Patent Abandoned Unintentionally Under 37 C.F.R. § 1.137(b), filed September 12, 2007.

This Petition is hereby dismissed.

Any further petition to revive the above-identified application must be submitted within TWO (2) MONTHS from the mail date of this decision. Extensions of time under 37 CFR 1.136(a) are permitted. The reconsideration request should include a cover letter entitled "Renewed Petition under 37 CFR 1.137." This is not final agency action within the meaning of 5 U.S.C. § 704.

The above-identified application became abandoned for failure to timely and properly reply to the Notice of Allowability, mailed March 28, 2007. The Notices set a non-extendable three (3) month period for reply. The Notice of Allowability required corrected drawings.

Applicant submitted an amendment and drawings on July 2, 2007; however, the amendment and drawings were not entered. Applicant was notified in an Office communication mailed July 24, 2007.

No complete and proper reply having been received, the application became abandoned on June 29, 2007. A Notice of Abandonment was mailed August 22, 2007.

Applicant files the present petition and drawings; however, no Terminal Disclaimer has been filed.

Applicable Law, Rules and MPEP

A petition to revive an abandoned application on the grounds that the failure to reply was unintentional (37 CFR 1.137(b)) must be accompanied by: (1) the required reply (which has been filed); (2) a statement that the entire delay in filing the required reply from the

due date for the reply until the filing of a grantable petition pursuant to 37 CFR 1.137(b) was unintentional; (3) any terminal disclaimer required pursuant to 37 CFR 1.137(d) (see above discussion); and (4) the petition fee as set forth in 37 CFR 1.17(m).

A terminal disclaimer and the terminal disclaimer fee is required under 37 CFR 1.137(d) if the application is: (1) a design application, (2) a utility application filed before June 8, 1995, or (3) a plant application filed before June 8, 1995.

Since the above-identified application is a design application, 37 CFR 1.137(d) requires a terminal disclaimer dedicating to the public a terminal part of the term of any patent granted on the application or any patent granted on any continuing application that contains a specific reference under 35 U.S.C. 120, 121, or 365(c) to the application. The period to be disclaimed will be a terminal part of the patent to be granted equivalent to the period of abandonment. The period of abandonment will be computed to be the number of months from the date of abandonment to the date of filing a grantable petition. A terminal disclaimer fee of $130 ($65 if small entity) is required. If the terminal disclaimer is signed by an assignee, the assignee must comply with the requirements of 37 CFR 3.73(b).

Further correspondence with respect to this matter should be addressed as follows:

By mail: Director for Patents
PO Box 1450
Alexandria, VA 22313-1450

By FAX: (571) 273-8300
Attn: Office of Petitions

By hand: Customer Service Window
Randolph Building
401 Dulany Street
Alexandria, VA 22314

Telephone inquiries concerning this matter should be directed to the undersigned at (571) 272-3232.

Derek L. Woods
Attorney
Office of Petitions

Enclosure: Terminal Disclaimer Form

PTO/SB/63 (11-07)
Approved for use through 11/30/2007. OMB 0651-0031
U.S. Patent and Trademark Office; U.S. DEPARTMENT OF COMMERCE
Under the Paperwork Reduction Act of 1995, no persons are required to a collection of information unless it displays a valid OMB control number.

TERMINAL DISCLAIMER TO ACCOMPANY PETITION

Docket Number (Optional)

In re Application of:

Name:

Application Number:

Filed:

For:

The owner*, _____ of _____ percent interest in the above-identified application hereby disclaims a terminal part of the term of any patent granted the above-identified application equivalent to: (1) if the above-identified application is a design application, the period of abandonment of the above-identified application, and (2) if the above-identified application is a utility or plant application, the lesser of: (a) the period of abandonment of the application; or (b) the period extending beyond twenty years from the date on which the above-identified application was filed in the United States or, if the application contains a specific reference to an earlier filed application(s) under 35 U.S.C. 120, 121, or 365(c), from the date on which the earliest such application was filed. This disclaimer also applies to any patent granted on a utility or plant application filed before June 8, 1995, or a design application, that contains a specific reference under 35 U.S.C. 120, 121, or 365(c) to the above-identified application. This disclaimer is binding upon the grantee, and its successors or assigns.

Check either box 1 or 2 below, if appropriate.

1. ☐ For submissions on behalf of an organization (e.g., corporation, partnership, university, government agency, etc.), the undersigned is empowered to act on behalf of the organization.
2. ☐ The undersigned is an attorney or agent of record. Registration Number_____.

Signature	Date
Typed or Printed Name	Telephone Number

☐ Terminal disclaimer fee under 37 CFR 1.20(d) included.

WARNING: Information on this form may become public. Credit card information should not be included on this form. Provide credit card information and authorization on PTO-2038.

* Statement under 37 CFR 3.73(b) is required if terminal disclaimer is signed by the assignee (owner). Form PTO/SB/96 may be used for making this certification. See MPEP § 324.

This collection of information is required by 37 CFR 1.137. The information is required to obtain or retain a benefit by the public which is to file (and by the USPTO to process) an application. Confidentiality is governed by 35 U.S.C. 122 and 37 CFR 1.11 and 1.14. This collection is estimated to take 12 minutes to complete, including gathering, preparing, and submitting the completed application form to the USPTO. Time will vary depending upon the individual case. Any comments on the amount of time you require to complete this form and/or suggestions for reducing this burden, should be sent to the Chief Information Officer, U.S. Patent and Trademark Office, U.S. Department of Commerce, P.O. Box 1450, Alexandria, VA 22313-1450. DO NOT SEND FEES OR COMPLETED FORMS TO THIS ADDRESS. **SEND TO: Commissioner for Patents, P.O. Box 1450, Alexandria, VA 22313-1450.**

If you need assistance in completing the form, call 1-800-PTO-9199 and select option 2.

Privacy Act Statement

The **Privacy Act of 1974 (P.L. 93-579)** requires that you be given certain information in connection with your submission of the attached form related to a patent application or patent. Accordingly, pursuant to the requirements of the Act, please be advised that: (1) the general authority for the collection of this information is 35 U.S.C. 2(b)(2); (2) furnishing of the information solicited is voluntary; and (3) the principal purpose for which the information is used by the U.S. Patent and Trademark Office is to process and/or examine your submission related to a patent application or patent. If you do not furnish the requested information, the U.S. Patent and Trademark Office may not be able to process and/or examine your submission, which may result in termination of proceedings or abandonment of the application or expiration of the patent.

The information provided by you in this form will be subject to the following routine uses:

1. The information on this form will be treated confidentially to the extent allowed under the Freedom of Information Act (5 U.S.C. 552) and the Privacy Act (5 U.S.C 552a). Records from this system of records may be disclosed to the Department of Justice to determine whether disclosure of these records is required by the Freedom of Information Act.
2. A record from this system of records may be disclosed, as a routine use, in the course of presenting evidence to a court, magistrate, or administrative tribunal, including disclosures to opposing counsel in the course of settlement negotiations.
3. A record in this system of records may be disclosed, as a routine use, to a Member of Congress submitting a request involving an individual, to whom the record pertains, when the individual has requested assistance from the Member with respect to the subject matter of the record.
4. A record in this system of records may be disclosed, as a routine use, to a contractor of the Agency having need for the information in order to perform a contract. Recipients of information shall be required to comply with the requirements of the Privacy Act of 1974, as amended, pursuant to 5 U.S.C. 552a(m).
5. A record related to an International Application filed under the Patent Cooperation Treaty in this system of records may be disclosed, as a routine use, to the International Bureau of the World Intellectual Property Organization, pursuant to the Patent Cooperation Treaty.
6. A record in this system of records may be disclosed, as a routine use, to another federal agency for purposes of National Security review (35 U.S.C. 181) and for review pursuant to the Atomic Energy Act (42 U.S.C. 218(c)).
7. A record from this system of records may be disclosed, as a routine use, to the Administrator, General Services, or his/her designee, during an inspection of records conducted by GSA as part of that agency's responsibility to recommend improvements in records management practices and programs, under authority of 44 U.S.C. 2904 and 2906. Such disclosure shall be made in accordance with the GSA regulations governing inspection of records for this purpose, and any other relevant (*i.e.*, GSA or Commerce) directive. Such disclosure shall not be used to make determinations about individuals.
8. A record from this system of records may be disclosed, as a routine use, to the public after either publication of the application pursuant to 35 U.S.C. 122(b) or issuance of a patent pursuant to 35 U.S.C. 151. Further, a record may be disclosed, subject to the limitations of 37 CFR 1.14, as a routine use, to the public if the record was filed in an application which became abandoned or in which the proceedings were terminated and which application is referenced by either a published application, an application open to public inspection or an issued patent.
9. A record from this system of records may be disclosed, as a routine use, to a Federal, State, or local law enforcement agency, if the USPTO becomes aware of a violation or potential violation of law or regulation.

UNITED STATES PATENT AND TRADEMARK OFFICE

Commissioner for Patents
United States Patent and Trademark Office
P.O. Box 1450
Alexandria, VA 22313-1450
www.uspto.gov

DAVID I. ROCHE
BAKER & MCKENZIE LLP
130 EAST RANDOLPH DRIVE
CHICAGO IL 60601

COPY MAILED
APR 25 2008
OFFICE OF PETITIONS

In re Application of	:	
Berg et al.	:	
Application No. 29/197712	:	DECISION ON
Filing or 371(c) Date: 01/20/2004	:	PETITION
Title of Invention:	:	
PERCUSSION CASE		:

This is a decision on the renewed Petition for Revival of an Application for Patent Abandoned Unintentionally Under 37 C.F.R. § 1.137(b), filed February 23, 2008.

This Petition is hereby granted.

The above-identified application became abandoned for failure to timely and properly reply to the Notice of Allowability, mailed March 28, 2007. The Notices set a non-extendable three (3) month period for reply. The Notice of Allowability required corrected drawings. Applicant submitted an amendment and drawings on July 2, 2007; however, the amendment and drawings were not entered. Applicant was notified in an Office communication mailed July 24, 2007. No complete and proper reply having been received, the application became abandoned on June 29, 2007. A Notice of Abandonment was mailed August 22, 2007.

The renewed petition satisfies the requirements of 37 CFR 1.137(b) in that petitioner has supplied (1) the reply in the form of the issue fee and corrected drawings; (2) the petition fee, (3) a proper statement of unintentional delay, and (4) a terminal disclaimer and fee as required by 37 CFR 1.137(d). Accordingly, the failure to timely pay the issue fee as required by the Notice is accepted as being unintentionally delayed.

The terminal disclaimer is accepted and has been made of record. Any continuing application filed from this application must contain a copy of the terminal disclaimer. The copy of the terminal disclaimer must be filed with a cover letter requesting the terminal disclaimer be recorded on the continuing application. A copy of this decision should be attached to the cover letter.

This application is being referred to Publishing Division for processing into a patent.

Telephone inquiries concerning this decision should be directed to the undersigned at (571) 272-3232.

Derek L. Woods
Attorney
Office of Petitions

UNITED STATES PATENT AND TRADEMARK OFFICE

COMMISSIONER FOR PATENTS
UNITED STATES PATENT AND TRADEMARK OFFICE
P.O. BOX 1450
ALEXANDRIA, VA 22313-1450
www.uspto.gov

APR 22 2004

NATTER & NATTER
25 WEST 43 STREET
NEW YORK NY 10036

In re Application of	:	
Lalo Eyal	:	
Serial No.: 29/197,754	:	DECISION ON
Filed: January 20, 2004	:	PETITON TO MAKE SPECIAL
For: Watch Case	:	

This is in response to applicants' petition filed April 7, 2004, to make the above-identified application special under the provisions of 37 CFR 1.102(d), based on infringement.

Applicant has satisfied the provisions set forth in M.P.E.P. 708.02, II. Therefore the petition is **GRANTED**.

The application will be forwarded to the examiner for action on the merits commensurate with this decision.

Should there be any questions with regard to this letter please contact John Kittle by letter addressed to the Director, Technology Center 3700/2900, P.O. Box 1450 Alexandria, VA 22313-1450 or by telephone at (703) 308-0873 or by facsimile transmission at (703) 308-3139.

John E. Kittle

John E. Kittle
Director
Technology Center 3700/2900

UNITED STATES PATENT AND TRADEMARK OFFICE

COMMISSIONER FOR PATENTS
UNITED STATES PATENT AND TRADEMARK OFFICE
P.O. BOX 1450
ALEXANDRIA, VA 22313-1450
www.uspto.gov

MINTZ, LEVIN, COHN, FERRIS, GLOVSKY
AND POPEO, P.C.
ONE FINANCIAL CENTER
BOSTON MA 02111

COPY MAILED
AUG 17 2005
OFFICE OF PETITIONS

In re Patent No. D502785 :
Issue Date: March 8, 2005 :
Application No. 29/197,825 : ON PETITION
Filed: January 21, 2004 :
Attorney Docket No. 25739-030 :

This is a decision on the petition under 37 CFR 1.182, filed April 9, 2005, to reprint the front page of the Letters Patent.

The petition is GRANTED.

The front page of the Letters Patent will be reprinted to correctly include joint inventor Jordan Nollman on the copy provided to petitioner. However, this copy will be the only copy to show such correction. The original Letters Patent and the correction made by way of the certificate of correction will remain in the archives of the USPTO.

The file is being forwarded to the Certificates of Correction Branch for appropriate processing of a Certificate of Correction to place in the archives of the PTO. Afterwards, the file will be forwarded to Publishing Division for reprinting of the front page of the original Letters Patent.

No fee for the certificate of correction will be charged to counsel's deposit account; however, the $400 petition fee under 37 CFR 1.182 to reprint the front page of the Letters Patent will be charged as authorized.

Telephone inquiries concerning this matter may be directed to the undersigned at (571) 272-3204.

Sherry D. Brinkley
Petitions Examiner
Office of Petitions
Office of the Deputy Commissioner
for Patent Examination Policy

UNITED STATES PATENT AND TRADEMARK OFFICE

Commissioner for Patents
United States Patent and Trademark Office
P.O. Box 1450
Alexandria, VA 22313-1450
www.uspto.gov

DAMON NAWROZKI
3101 BATAVIA AVENUE
BALTIMORE, MD 21214

COPY MAILED

AUG 0 2 2004

OFFICE OF PETITIONS

In re Application of	:	
Gabriel Concari and Damon Nawrozki	:	
Application No. 29/197,849	:	LETTER
Filed: January 21, 2004	:	
Attorney Docket No. TN-09424	:	
Title: RADIO	:	

Dear Mr. Nawrozki:

You are named as a joint inventor in the above-identified United States patent application filed under the provisions of 35 U.S.C. 116 (United States Code) and 37 CFR 1.47(a), Rules of Practice in Patent Cases. Should a patent be granted on the application you will be designated therein as a joint inventor.

As a named inventor you are entitled to inspect any paper in the file wrapper of the application, order copies of all or any part thereof (at a prepaid cost per 37 CFR 1.19) or make your position of record in the application. Alternatively, you may arrange to do any of the preceding through a registered patent attorney or agent presenting written authorization from you. If you care to join the application, counsel of record (see below) would presumably assist you. Joining in the application would entail the filing of an appropriate oath or declaration by you pursuant to 37 CFR 1.63. However, no action on your part is required for this patent to issue with you as a named inventor.

Telephone inquiries regarding this communication should be directed to Petitions Attorney Nancy Johnson at (703) 305-0309. Requests for information regarding your application should be directed to the File Information Unit at (703) 308-2733. Information regarding how to pay for and order a copy of the application, or a specific paper in the application, should be directed to the Certification Division at (703) 308-9726 or 1-800-972-6382 (outside the Washington D.C. area).

Nancy Johnson
Senior Petitions Attorney
Office of Petitions

Black & Decker Inc.
TW-199
701 E. Joppa Road
Towson, MD 21286

UNITED STATES PATENT AND TRADEMARK OFFICE

Commissioner for Patents
United States Patent and Trademark Office
P.O. Box 1450
Alexandria, VA 22313-1450
www.uspto.gov

Paper No.

Black & Decker Inc.
TW-199
701 E. Joppa Road
Towson, MD 21286

COPY MAILED

AUG 0 2 2004

OFFICE OF PETITIONS

In re Application of Gabriel Concari and Damon Nawrozki Application No. 29/197,849 Filed: January 21, 2004 Attorney Docket No. TN-09424 Title: RADIO	DECISION ACCORDING STATUS UNDER 37 CFR 1.47(a)

This is a decision on the PETITION under 37 C.F.R. § 1.47(a), filed June 1, 2004 (certificate of mailing May 27, 2004).

The petition is **GRANTED**.

The above-identified application was filed on January 21, 2004, with an unexecuted declaration. Accordingly, on March 30, 2004, a "Notice to File Missing Parts of Nonprovisional Application" was mailed, requiring an executed oath or declaration, and a surcharge for its late filing.

In response, rule 47 applicant timely filed the instant petition (and fee); the late surcharge; and a declaration executed by joint inventor Concari on behalf of himself/herself and on behalf of non-signing joint inventor Nawrozki. Rule 47 applicant maintains that status under 37 CFR 1.47 is proper because joint inventor Nawrozki refuses to join in the application for patent.

By declaration of patent attorney Adan Ayala, petitioner has shown that the application papers were presented to inventor Nawrozki, but by his conduct, he refused to sign. The petition includes documentary evidence that the papers were presented by both first class mail and by Federal Express delivery. The petition includes a statement of the last known address of the non-signing inventor.

The declaration filed June 1, 2004, and the petition have been reviewed and found in compliance with 37 CFR 1.47(a).

This application is hereby accorded Rule 1.47(a) status.

As provided in new Rule 1.47(c), this Office will forward notice of this application's filing to the non-signing inventor at the address given in the petition. Notice of the filing of this application will also be published in the Official Gazette.

The application will be examined in Technology Center 2914 in due course.

Telephone inquiries regarding this decision should be directed to the undersigned at (703) 305-0309.

Nancy Johnson
Senior Petitions Attorney
Office of Petitions

UNITED STATES PATENT AND TRADEMARK OFFICE

Commissioner for Patents
United States Patent and Trademark Office
P.O. Box 1450
Alexandria, VA 22313-1450
www.uspto.gov

INDIANAPOLIS OFFICE 27879
BRINKS HOFER GILSON & LIONE
ONE INDIANA SQUARE, SUITE 1600
INDIANAPOLIS IN 46204-2033

COPY MAILED

FEB 05 2007

OFFICE OF PETITIONS

In re Patent of	:	
Livingston, et al.	:	
Patent No. D528,003	:	
Issue Date: September 12, 2006	:	Decision on Petition
Application No. 29/197,872	:	
Filing Date: January 21, 2004	:	
Attorney Docket No. 580/4093	:	

This is a decision on the September 18, 2006 request under 37 CFR 3.81 to accept the correction of the assignee data.

The request under 37 CFR 3.81 is **dismissed**.

Effective June 25, 2004, 37 CFR 3.81(b) has been revised to no longer require the correction of the assignee data prior to issuance of the patent. Therefore, a petition to waive the rule is unnecessary. 37 CFR 3.81(b) currently states:

> Any request for issuance of an application in the name of the assignee submitted after the date of payment of the issue fee, and any request for a patent to be corrected to state the name of the assignee, must state that the assignment was submitted for recordation as set forth in § 3.11 before issuance of the patent, and must include a request for a certificate of correction under § 1.323 of this chapter (accompanied by the fee set forth in § 1.20(a)) and the processing fee set forth in § 1.17(i) of this chapter.

In other words, the request under 37 CFR 3.81(b) will be granted when:

(1) a request under 37 CFR 3.81 and the fee set forth in 37 CFR 1.17(i) are filed,
(2) the assignment was submitted for recordation prior to issuance of the patent, and
(3) a request for a certificate of correction and the fee set forth in 37 CFR 1.20(a) are submitted.

Deposit account no. 23-1925 will be charged the required $100.00 certificate of correction fee.

Petitioner has not met the requirements set forth above because the proposed certificate of correction does not list the city in Colorado in which Ball Corporation is located. A **city** and state is required. Therefore, the request is dismissed.

Further correspondence with respect to this matter should be addressed as follows:

By mail: Mail Stop PETITION
Commissioner for Patents
Post Office Box 1450
Alexandria, VA 22313-1450

By hand: U.S. Patent and Trademark Office
Customer Service Window, Mail Stop Petition
Randolph Building
401 Dulany Street
Alexandria, VA 22314

By FAX: (571) 273-8300 - ATTN: Office of Petitions

The file is being forwarded to Files Repository.

Telephone inquiries should be directed to the undersigned at (571) 272-3230.

Shirene Willis Brantley
Petitions Attorney
Office of Petitions

UNITED STATES PATENT AND TRADEMARK OFFICE

Commissioner for Patents
United States Patent and Trademark Office
P.O. Box 1450
Alexandria, VA 22313-1450
www.uspto.gov

INDIANAPOLIS OFFICE 27879
BRINKS HOFER GILSON & LIONE
ONE INDIANA SQUARE, SUITE 1600
INDIANAPOLIS IN 46204-2033

COPY MAILED

MAY 10 2007

OFFICE OF PETITIONS

In re Patent of	:	
Livingston, et al.	:	
Patent No. D528,003	:	
Issue Date: September 12, 2006	:	Decision on Petition
Application No. 29/197,872	:	
Filing Date: January 21, 2004	:	
Attorney Docket No. 580/4093	:	

This is a decision on the renewed request, filed, February 9, 2007, under 37 CFR 3.81(b)[1] to correct the assignee's name on the Fee(s) Transmittal form PTOL-85(b) by way of a certificate of correction.

The request is **GRANTED**.

Petitioner states that the correct assignee's name is Ball Corporation and that the incorrect assignee's name was included on the Fee(s) Transmittal form PTOL-85(b) at the time of payment of the issue fee. Accordingly, petitioner requests that a certificate of correction be issued to reflect the correct assignee on the front page of the Letters Patent in the patent to be issued from the application.

37 CFR 3.81(b), effective June 25, 2004, reads:

> *After payment of the issue fee:* Any request for issuance of an application in the name of the assignee submitted after the date of payment of the issue fee, and any request for a patent to be corrected to state the name of the assignee, must state that the assignment was submitted for recordation as set forth in § 3.11 before issuance of the patent, and must include a request for a certificate

[1] *See* MPEP 1309, subsection II; and Official Gazette of June 22, 2004.

of correction under § 1.323 of this chapter (accompanied by the fee set forth in § 1.20(a) and the processing fee set forth in § 1.17(i) of this chapter

The request was accompanied by a certificate of correction (and fee) as required by 3.81(b). Further, Office assignment records reflect that Ball Corporation is the assignee of record. Accordingly, as the request complies with the provisions of 37 CFR 3.81(b), it would be appropriate for a certificate of correction to be processed after issuance of this application into a patent.

Inquiries concerning this decision should be directed to the undersigned at (571) 272-3230. Any questions concerning the issuance of a certificate of correction should be directed to the Certificates of Correction Branch at (571) 272-4200.

This matter is being referred to the Certificates of Correction Branch for processing of a certificate of correction after issuance of this application into a patent.

Shirene Willis Brantley

Shirene Willis Brantley
Senior Petitions Attorney
Office of Petitions

UNITED STATES PATENT AND TRADEMARK OFFICE

Commissioner for Patents
United States Patent and Trademark Office
P.O. Box 1450
Alexandria, VA 22313-1450
www.uspto.gov
DIW Jun-06

GREER, BURNS & CRAIN, LTD.
SUITE 2500
300 SOUTH WACKER DRIVE
CHICAGO IL 60606

COPY MAILED
JUN 2 0 2006
OFFICE OF PETITIONS

In re Application of	:	
Simpson et al.	:	DECISION ON PETITION TO
Application No. 29/197,879	:	WITHDRAW HOLDING OF
Filed: 21 January, 2004	:	ABANDONMENT
Attorney Docket No. 0419.68789	:	

This is a decision on the petition filed on 2 May, 2006, which is treated as a petition to withdraw the holding of abandonment in the above-identified application.

The petition is **GRANTED**.

A review of the record reveals that an Office action requiring restriction or election was mailed on 20 September, 2005, which set a one (1) month shortened statutory period for reply. No extensions of the time for reply in accordance with 37 CFR 1.136(a) were obtained. As such, the application became for failure to timely reply to the Notice mailed on 20 September, 2005. The filing of the present petition precedes the mailing of Notice of Abandonment.

Petitioners assert that a reply to the Office action was timely filed. In support, petitioners have supplied a copy of the response, which contains a Certificate of Mailing or Transmission dated 13 October, 2005, stating that the correspondence was deposited in first class mail, and signed by attorney Paul G. Juettner (Reg. No. 30,270). The petition includes a statement by attorney Juettner in which he states he signed the certificate of mailing with a reasonable basis to expect the response would be deposited in first class mail with the USPS on 13 October, 2005.

The statement provided is considered to be a statement to the Satisfaction of the Director to the previous timely mailing or transmission of the reply.[1]

As petitioners have provided convincing evidence that a response to the election/restriction requirement was transmitted to the USPTO on 13 October, 2005, the showing of record is that a response was timely filed, and there is no abandonment in fact. Any inconvenience caused to applicant is regretted.

The application is being referred to Technology Center Art Unit 2912 for further processing.

Telephone inquiries concerning this matter may be directed to the undersigned at (571)272-3231.

D Wood

Douglas I. Wood
Senior Petitions Attorney
Office of Petitions

---

[1] See 37 CFR 1.8(b)(3).

UNITED STATES PATENT AND TRADEMARK OFFICE

Commissioner for Patents
United States Patent and Trademark Office
P.O. Box 1450
Alexandria, VA 22313-1450
www.uspto.go

COPY MAILED

NOV 1 8 2005

OFFICE OF PETITIONS

Chu-Li Wang
No. 149, (Room 9, 10/F.)
Lin Sen Road, Sec.1
Taiwan 701 TW TAIWAN

In re Patent No.	:	
D494915	:	
Application No. 29/197,892	:	DECISION GRANTING PETITION
Filing Date: January 22, 2004	:	
Issue Date: August 24, 2004	:	
Attorney Docket No. DEF2200	:	

This is concerning the communication filed January 11, 2005, which will be treated as a petition under 37 CFR 1.182 requesting a duplicate Letters Patent for the above-cited application.

The petition is **granted.**

The Publishing Division is directed to issue duplicate Letters Patent.

Any questions concerning this matter may directed to the undersigned at (571) 272-3222. Any questions concerning issuance of the duplicate Letter Patent should be directed to Kimberly Terrell (703) 308-9250.

A copy of this decision is being forwarded to Publishing Division for issuance of duplicate Letters Patent.

Kenya A. McLaughlin
Petitions Attorney
Office of Petitions

cc: Kimberly Terrell, South Tower 8th Floor, C-41 (Fax: (703)746-4658)

UNITED STATES PATENT AND TRADEMARK OFFICE

COMMISSIONER FOR PATENTS
UNITED STATES PATENT AND TRADEMARK OFFICE
P.O. BOX 1450
ALEXANDRIA, VA 22313-1450
www.uspto.gov

APR 27 2004

BANNER & WITCOFF, LTD
ELEVENTH FLOOR
1001 G STREET, N.W.
WASHINGTON, D.C. 2001-4597

In re Application of	:	
David J. Roulo	:	
Serial No.: 29/197,905	:	DECISION ON PETITION
Filed: January 23, 2004	:	
For: Portion Of A Show Sole	:	

This is in response to the petition applicant filed on February 24, 2004 to make the above-identified application special under the provisions of 37 CFR 1.102(d).

Applicant has satisfied the provisions set forth in M.P.E.P. 708.02, VIII, thus the petition is **GRANTED**.

The application will be forwarded to the examiner for action on the merits commensurate with this decision.

Should there be any questions with regard to this letter please contact John Kittle by letter addressed to the Director, Technology Center 3700/2900, P.O. Box 1450 Alexandria, VA 22313-1450, or by telephone at (703) 308-0873 or by facsimile transmission at (703) 308-3139.

John E. Kittle

John E. Kittle
Director
Technology Center 3700/2900

UNITED STATES PATENT AND TRADEMARK OFFICE

Commissioner for Patents
United States Patent and Trademark Office
P.O. Box 1450
Alexandria, VA 22313-1450
www.uspto.gov

MAY 04 2004

BANNER & WITCOFF, LTD
ELEVENTH FLOOR
1001 G STREET, N.W.
WASHINGTON, D.C. 2001-4597

In re Application of	:	
David J. Roulo	:	
Serial No.: 29/197,906	:	DECISION ON PETITION
Filed: January 23, 2004	:	
For: Portion Of A Shoe Upper	:	

This is in response to the petition applicant filed on February 24, 2004 to make the above-identified application special under the provisions of 37 CFR 1.102(d).

Applicant has satisfied the provisions set forth in M.P.E.P. 708.02, VIII, thus the petition is **GRANTED**.

The application will be forwarded to the examiner for action on the merits commensurate with this decision.

Should there be any questions with regard to this letter please contact John Kittle by letter addressed to the Director, Technology Center 3700/2900, P.O. Box 1450 Alexandria, VA 22313-1450, or by telephone at (703) 308-0873 or by facsimile transmission at (703) 308-3139.

John E. Kittle
Director
Technology Center 3700/2900

UNITED STATES PATENT AND TRADEMARK OFFICE

Commissioner for Patents
United States Patent and Trademark Office
P.O. Box 1450
Alexandria, VA 22313-1450
www.uspto.gov

ROBERT L. FARRIS
REISING, ETHINGTON, BARNES,
KISSELLE & LEARMAN, PC
5291 COLONY DRIVE NORTH
SAGINAW, MI 48603

COPY MAILED

SEP 2 2 2005

OFFICE OF PETITIONS

In re Application of	:	
Fedak, Niles	:	
Application No. 29/197,933	:	ON PETITION
Filed: January 21, 2004	:	
Attorney Docket No. 7334.3001.001	:	

This is a decision on the petition under 37 C.F.R. § 1.137(b), filed September 6, 2005, to revive the above-identified application.

The petition is **DISMISSED**.

Any request for reconsideration must be submitted within TWO (2) MONTHS from the mail date of this decision. No further petition fee is required for the request. Extensions of time under 37 CFR 1.136(a) are permitted. The reconsideration request should include a cover letter entitled "Renewed Petition under 37 CFR 1.137(b)." This is **not** a final agency action within the meaning of 5 U.S.C. § 704.

The above-identified application became abandoned for failure to submit formal drawings in a timely manner in reply to the Notice of Allowability mailed January 27, 2005, which set a non-extendable period for reply of three (3) months. Accordingly, the above-identified application became abandoned on April 28, 2005. A Notice of Abandonment was mailed on August 3, 2005.

A grantable petition under 37 CFR 1.137(b) must be accompanied by:
(1) the required reply,[1]
(2) the petition fee,
(3) a statement that the entire delay in filing the required reply from the due date for the reply until the filing of a grantable petition pursuant to 37 CFR 1.137(b) was unintentional, and
(4) a terminal disclaimer and fee if the application was filed on or before June 8, 1995 or if the application is a design application.

Where there is a question as to whether either the abandonment or the delay in filing a petition under 37 CFR 1.137 was unintentional, the Commissioner may require additional information.[2]

---

[1] In a nonprovisional application abandoned for failure to prosecute, the required reply may be met by the filing of a continuing application. In an application or patent, abandoned or lapsed for failure to pay the issue fee or any portion thereof, the required reply must be the payment of the issue fee or any outstanding balance thereof.

The instant petition lacks item (4). The Office acknowledges receipt of the corrected drawings. However, pursuant to 37 CFR 1.137(d)(1), any petition to revive a design application must be accompanied by a terminal disclaimer and fee. Accordingly, prior to revival of the instant application, the terminal disclaimer and requisite fee must be submitted.

Further correspondence with respect to this matter should be addressed as follows:

By mail: Mail Stop PETITIONS
Commissioner for Patents
Post Office Box 1450
Alexandria, VA 22313-1450

By hand: Customer Window located at:

U.S. Patent and Trademark Office
Customer Service Window Randolph Building
401 Dulany Street
Alexandria, VA 22314

By fax: (571) 273-8300
ATTN: Office of Petitions

Any questions concerning this matter may be directed to the undersigned at (571) 272-3206.

Liana Chase
Petitions Examiner
Office of Petitions

---

[2] See MPEP 711.03(c)(III)(C) and (D).

UNITED STATES PATENT AND TRADEMARK OFFICE

Commissioner for Patents
United States Patent and Trademark Office
P.O. Box 1450
Alexandria, VA 22313-1450
www.uspto.gov

ROBERT L. FARRIS
REISING, ETHINGTON, BARNES,
KISSELLE & LEARMAN, PC
5291 COLONY DRIVE NORTH
SAGINAW, MI 48603

COPY MAILED

OCT 26 2005

OFFICE OF PETITIONS

In re Application of	:	
Fedak, Niles	:	
Application No. 29/197,933	:	ON PETITION
Filed: January 21, 2004	:	
Attorney Docket No. 7334.3001.001	:	

This is a decision on the renewed petition under 37 C.F.R. § 1.137(b), filed October 17, 2005, to revive the above-identified application.

The petition is **GRANTED.**

This matter is being referred to the Publishing Division for processing into a patent.

Telephone inquiries regarding this decision should be directed to the undersigned at (571) 272-3206.

Liana Chase
Petitions Examiner
Office of Petitions

UNITED STATES PATENT AND TRADEMARK OFFICE

COMMISSIONER FOR PATENTS
UNITED STATES PATENT AND TRADEMARK OFFICE
P.O. BOX 1450
ALEXANDRIA, VA 22313-1450
www.uspto.gov

OSTROLENK FABER GERB & SOFFEN
1180 AVENUE OF THE AMERICAS
NEW YORK, NY 10036-8403

COPY MAILED

FEB 27 2006

OFFICE OF PETITIONS

In re Application of :
Noel Mayo, et al. :
Application No. 29/197,957 :
Filed: January 21, 2004 :
Attorney Docket No. D/10-672 DIV :

ON PETITION

This is a decision in response to the petition filed February 15, 2006 under 37 CFR 1.313(c)(3) to withdraw the above-identified application from issue after payment of the issue fee. This is also a decision on the communication filed February 27, 2006, which is being treated as a renewed petition under 37 CFR 1.313(c)(3). See 1233 *Official Gazette* 54 (April 11, 2000).

The petition filed February 15, 2006 is DISMISSED AS MOOT.

Petitioner requested that the application be withdrawn from issue to permit abandonment for consideration of a Request for Continued Examination (RCE) under 37 CFR 114. Since RCE practice under 37 CFR 1.114 does not apply to design applications, the petition is dismissed as involving a moot issue. Accordingly, the RCE and Amendment filed February 15, 2006 are being placed in the file without further consideration.

The renewed petition filed February 27, 2006 is GRANTED.

Petitioner requests that the application be withdrawn from issue to permit abandonment for consideration of a continued prosecution application (CPA) under 37 CFR 1.53(d). The petition is found to comply with the requirements of 37 CFR 1.313(c)(3). Accordingly, the application is withdrawn from issue.

Petitioner is advised that the issue fee paid on July 22, 2005, in the parent application is not refundable nor can it be applied towards any new Notice of Allowance which may issue on the CPA filed February 27, 2006.

Telephone inquiries should be directed to the undersigned at (571) 272-3204.

The application is being referred to Technology Center AU 2912 for processing of the CPA filed February 27, 2006.

Sherry D. Brinkley

Sherry D. Brinkley
Petitions Examiner
Office of Petitions

UNITED STATES PATENT AND TRADEMARK OFFICE

Commissioner for Patents
United States Patent and Trademark Office
P.O. Box 1450
Alexandria, VA 22313-1450
www.uspto.gov

Date : February 27, 2006

TO : Director, Office of Patent Publication

FROM : Office of the Deputy Commissioner for Patent Examination Policy

SUBJECT : Withdrawal from Issue of

Applicant(s) : Noel Mayo, et al.
Application No. : 29/197,957
Filed : January 21, 2004

The above-identified application has been assigned Patent No. D516,044 and an issue date of February 28, 2006.

It is hereby directed that this application be withdrawn from issue at the request of the applicant.

Do not refund the issue fee.

The following erratum should be published in the Official Gazette if the above-identified application is published in the OG of February 28, 2006:

> "All reference to Patent No. D516,044 to NOEL MAYO, ET AL. of PENNSYLVANIA for INFRARED HAND-HELD REMOTE CONTROL appearing in the Official Gazette of February 28, 2006, should be deleted since no patent was granted."

Sherry D. Brinkley
Petitions Examiner
Office of Petitions

cc: Paul Harrison, Crystal Park 3-44l (FAX-306-2737)
Deneise Boyd, Crystal Park 2, Suite 1100 (FAX-308-5413)
Mary Louise McAskill, Crystal Park 3-910 (FAX 305-4372)
Niomi Farmer, Crystal Park 3-9l0 (FAX-305-4372)
Mary E. Johnson (Cookie), P/OCS, CM1-6D07
Duane K.Davis, P/OCS, CM1-6A07
Tamara K. Greene, PK3-910

UNITED STATES PATENT AND TRADEMARK OFFICE

Commissioner for Patents
United States Patent and Trademark Office
P.O. Box 1450
Alexandria, VA 22313-1450
www.uspto.gov

CRAIG N. KILLEN
NELSON MULLINS RILEY & SCARBOROUGH
P O BOX 11070
COLUMBIA, SC 29211

COPY MAILED
JUL 19 2006
OFFICE OF PETITIONS

In re Application of	:
Nancy Rhodes	:
Application No. 29/197,962	: DECISION ON PETITION
Filed: January 22, 2004	: UNDER 37 CFR 1.137(b)
Attorney Docket No. 15911/09061	:

This is a decision on the petition under 37 CFR 1.137(b), filed April 17, 2006, to revive the above-identified application.

The petition is **DISMISSED**.

Any request for reconsideration of this decision must be submitted within TWO (2) MONTHS from the mail date of this decision. Extensions of time under 37 CFR 1.136(a) are permitted. The reconsideration request should include a cover letter entitled "Renewed Petition under 37 CFR 1.137(b)." This is **not** a final agency action within the meaning of 5 U.S.C. § 704.

A grantable petition under 37 CFR 1.137(b) must be accompanied by: (1) the required reply, unless previously filed; (2) the petition fee as set forth in 37 CFR 1.17(m); (3) a statement that the entire delay in filing the required reply from the due date for the reply until the filing of a grantable petition pursuant to 37 CFR 1.137(b) was unintentional; and (4) any terminal disclaimer (and fee as set forth in 37 CFR 1.20(d)) required by 37 CFR 1.137(c). Where there is a question as to whether either the abandonment or the delay in filing a petition under 37 CFR 1.137 was unintentional, the Director may require additional information. See MPEP 711.03(c).

The instant petition lacks item (4). In this regard, the format of the terminal disclaimer received with the petition is not acceptable. A blank terminal disclaimer form having an acceptable format accompanies this decision on petition.

As noted above, this application became abandoned for failure to

timely pay the issue fee. In an application or patent, abandoned or lapsed for failure to pay the issue fee or any portion thereof, the required reply must be the payment of the issue fee or any outstanding balance thereof. See MPEP 711.03(c)(II)(A)(1). Therefore, the filing of a request for continued examination under 37 CFR 1.114 or the filing of a request for a continued prosecution application under 37 CFR 1.53(d) is not a proper reply under 37 CFR 1.137(a)(1) or (b)(1).
It is noted that petitioner had submitted a $395 fee for the improper request for continued examination on September 26, 2005. As the request was improper, the fee submitted therefor is unnecessary. Accordingly, this $395 fee will be applied towards the issue fee due in this application. The balance due of $5 will be charged to petitioner's deposit account as authorized[1].

Further correspondence with respect to this matter should be addressed as follows:

By mail: Mail Stop PETITIONS
Commissioner for Patents
Post Office Box 1450
Alexandria, VA 22313-1450

By hand: Customer Service Window
Mail Stop Petitions
Randolph Building
401 Dulany Street
Alexandria, VA 22314

By fax: (571) 273-8300
ATTN: Office of Petitions

Any questions concerning this matter may be directed to the undersigned at (571) 272-3218.

Frances Hicks
Petitions Examiner
Office of Petitions

ATTACHMENT: Blank Terminal Disclaimer Form

---

[1] The issue fee is not refundable nor can it be applied towards any future Notice of Allowance and Fee(s) Due which may issue in this application.

PTO/SB/63 (09-04)
Approved for use through 07/31/2006. OMB 0651-0031
U.S. Patent and Trademark Office; U.S. DEPARTMENT OF COMMERCE
Under the Paperwork Reduction Act of 1995, no persons are required to a collection of information unless it displays a valid OMB control number.

TERMINAL DISCLAIMER TO ACCOMPANY PETITION	Docket Number (Optional)

In re Application of:

Name:

Application Number:

Filed:

For:

The owner*, _____ of _____ percent interest in the above-identified application hereby disclaims a terminal part of the term of any patent granted the above-identified application equivalent to: (1) if the above-identified application is a design application, the period of abandonment of the above-identified application, and (2) if the above-identified application is a utility or plant application, the lesser of: (a) the period of abandonment of the application; or (b) the period extending beyond twenty years from the date on which the above-identified application was filed in the United States or, if the application contains a specific reference to an earlier filed application(s) under 35 U.S.C. 120, 121, or 365(c), from the date on which the earliest such application was filed. This disclaimer also applies to any patent granted on a utility or plant application filed before June 8, 1995, or a design application, that contains a specific reference under 35 U.S.C. 120, 121, or 365(c) to the above-identified application. This disclaimer is binding upon the grantee, and its successors or assigns.

Check either box 1 or 2 below, if appropriate.

1. ☐ For submissions on behalf of an organization (e.g., corporation, partnership, university, government agency, etc.), the undersigned is empowered to act on behalf of the organization.
2. ☐ The undersigned is an attorney or agent of record. Registration Number_____.

_____	_____
Signature	Date
_____	_____
Typed or Printed Name	Telephone Number

☐ Terminal disclaimer fee under 37 CFR 1.20(d) included.

WARNING: Information on this form may become public. Credit card information should not be included on this form. Provide credit card information and authorization on PTO-2038.

* Statement under 37 CFR 3.73(b) is required if terminal disclaimer is signed by the assignee (owner). Form PTO/SB/96 may be used for making this certification. See MPEP § 324.

This collection of information is required by 37 CFR 1.137. The information is required to obtain or retain a benefit by the public which is to file (and by the USPTO to process) an application. Confidentiality is governed by 35 U.S.C. 122 and 37 CFR 1.11 and 1.14. This collection is estimated to take 12 minutes to complete, including gathering, preparing, and submitting the completed application form to the USPTO. Time will vary depending upon the individual case. Any comments on the amount of time you require to complete this form and/or suggestions for reducing this burden, should be sent to the Chief Information Officer, U.S. Patent and Trademark Office, U.S. Department of Commerce, P.O. Box 1450, Alexandria, VA 22313-1450. DO NOT SEND FEES OR COMPLETED FORMS TO THIS ADDRESS. **SEND TO: Commissioner for Patents, P.O. Box 1450, Alexandria, VA 22313-1450.**

If you need assistance in completing the form, call 1-800-PTO-9199 and select option 2.

UNITED STATES PATENT AND TRADEMARK OFFICE

Commissioner for Patents
United States Patent and Trademark Office
P.O. Box 1450
Alexandria, VA 22313-1450
www.uspto.gov

Craig N. Killen
Nelson Mullins Riley & Scarborough
P.O. Box 11070
Columbia SC 29211

COPY MAILED

NOV 0 4 2008

OFFICE OF PETITIONS

In re Application of :
Nancy Rhodes :
Application No. 29/197,962 :
Filed: January 22, 2004 :
Attorney Docket No. 15911/09061 :

ON PETITION

This is a decision on the second renewed petition under 37 CFR 1.137(b), filed September 21, 2006, to revive the above-identified application.

The petition is **GRANTED**.

The above-identified application became abandoned for failure to submit the issue fee in a timely manner in reply to the Notice of Allowance/Allowability mailed June 21, 2005, which set a statutory period for reply of three (3) months. Accordingly, by operation of law, the above-identified application became abandoned on September 22, 2005.

The petition decision mailed July 19, 2006 indicates the petition under 37 CFR 1.137(b) filed April 17, 2006 was dismissed as failing to provide a proper terminal disclaimer.

The renewed petition includes a proper terminal disclaimer.

The renewed petition satisfies the conditions for revival pursuant to the provisions of 37 CFR 1.137(b) in that (1) the reply in the form of a request for Continued Prosecution Application; (2) the petition fee of $750; (3) the required statement of unintentional delay; and (4) the terminal disclaimer and fee have been received. Accordingly, the request for Continued Prosecution Application is accepted as having been unintentionally delayed.

The request for change of correspondence address filed October 28, 2008 has not been accepted. Craig Killen signed the request as the attorney or agent of record. Office records show there is **no** attorney of record in the above identified application. A courtesy copy of this decision is sent to the address associated with Customer Number 27530 but all further correspondence will be mailed only to the current address of record.

Telephone inquiries concerning this decision should be directed to Carl Friedman at (571) 272-6842.

The application file is being referred to Technology Center Art Unit 2911 for further processing of the Continued Prosecution Application .

Carl Friedman
Petitions Examiner
Office of Petitions

Cc: NELSON MULLINS RILEY & SCARBOROUGH, LLP
1320 MAIN STREET, 17TH FLOOR
COLUMBIA, SC 29201

UNITED STATES PATENT AND TRADEMARK OFFICE

Commissioner for Patents
United States Patent and Trademark Office
P.O. Box 1450
Alexandria, VA 22313-1450
www.uspto.gov

Craig N. Killen
Nelson Mullins Riley & Scarborough
P.O. Box 11070
Columbia SC 29211

COPY MAILED

NOV 0 4 2008

OFFICE OF PETITIONS

In re Application of :
Nancy Rhodes :
Application No. 29/197,962 : ON PETITION
Filed: January 22, 2004 :
Attorney Docket No. 15911/09061 :

This is a decision on the second renewed petition under 37 CFR 1.137(b), filed September 21, 2006, to revive the above-identified application.

The petition is **GRANTED**.

The above-identified application became abandoned for failure to submit the issue fee in a timely manner in reply to the Notice of Allowance/Allowability mailed June 21, 2005, which set a statutory period for reply of three (3) months. Accordingly, by operation of law, the above-identified application became abandoned on September 22, 2005.

The petition decision mailed July 19, 2006 indicates the petition under 37 CFR 1.137(b) filed April 17, 2006 was dismissed as failing to provide a proper terminal disclaimer.

The renewed petition includes a proper terminal disclaimer.

The renewed petition satisfies the conditions for revival pursuant to the provisions of 37 CFR 1.137(b) in that (1) the reply in the form of a request for Continued Prosecution Application; (2) the petition fee of $750; (3) the required statement of unintentional delay; and (4) the terminal disclaimer and fee have been received. Accordingly, the request for Continued Prosecution Application is accepted as having been unintentionally delayed.

The request for change of correspondence address filed October 28, 2008 has not been accepted. Craig Killen signed the request as the attorney or agent of record. Office records show there is **no** attorney of record in the above identified application. A courtesy copy of this decision is sent to the address associated with Customer Number 27530 but all further correspondence will be mailed only to the current address of record.

Copied from 29197262 on 01/03/2009

Telephone inquiries concerning this decision should be directed to Carl Friedman at (571) 272-6842.

The application file is being referred to Technology Center Art Unit 2911 for further processing of the Continued Prosecution Application .

Carl Friedman
Petitions Examiner
Office of Petitions

Cc: NELSON MULLINS RILEY & SCARBOROUGH, LLP
1320 MAIN STREET, 17TH FLOOR
COLUMBIA, SC 29201

Copied from 29197262 on 01/03/2009

UNITED STATES PATENT AND TRADEMARK OFFICE

Commissioner for Patents
United States Patent and Trademark Office
P.O. Box 1450
Alexandria, VA 22313-1450
www.uspto.gov

James R. Brueggemann, Esquire
Sheppard, Mullin, Richter & Hampton LLP
333 South Hope Street, 48th Floor
Los Angeles, CA 90071-1448

COPY MAILED

JAN 24 2005

OFFICE OF PETITIONS

In re Application of
Olsavsky et al.
Application No. 29/198,007
Filed: January 22, 2004
Attorney Docket No. 0EKM-109435
For: Golf Club Head

Letter

This is a decision on the petition under 37 CFR 1.47(a), filed July 30, 2004. A copy of the petition was resubmitted on September 24, 2004.

The petition is **DISMISSED**.

Any request for reconsideration of this decision must be submitted within TWO (2) MONTHS from the mail date of this decision. Extensions of time under 37 CFR 1.136(a) are permitted. Any response should be entitled "Request for Reconsideration of Petition Under 37 CFR 1.47(a)" and may include an oath or declaration executed by the inventor. **Failure to respond will result in abandonment of the application.**

A grantable petition under 37 CFR 1.47(a) requires

(1) proof that the non-signing inventor cannot be found or reached after diligent effort or that the inventor refuses to sign after having been presented with the application papers (specification, claims, and drawings),
(2) a proper oath or Declaration executed by the available joint inventor(s),
(3) the fee of $130 as specified in 37 CFR § 1.17(h), and
(4) the last known address of the omitted inventor(s).

In addition to the above requirements, the signing inventors must sign the declaration on behalf of the non-signing inventor. See MPEP 409.03(a).

The instant petition fails to satisfy (2). The mailing address listed on a declaration may be an address different than the listed residential address when an inventor customarily receives his or her mail at the mailing address listed. For example, an inventor may receive most of his or her mail at a post office box. The petition states that the mailing address for the non-signing inventor is different than the mailing address listed on the petition. In addition, the mailing address listed for the other inventors is the address of the assignee. No evidence has been provided to indicate all the inventors customarily have their mailed delivered to the address for the assignee.

Either a supplemental declaration, OR an Application Data Sheet, should be submitted correcting any incorrectly listed mailing addresses on the original declaration.

Further correspondence with respect to this matter should be addressed as follows:

By mail: Mail Stop Petition
Commissioner for Patents
P.O. Box 1450
Alexandria, VA 22313-1450

By facsimile: (703) 872-9306
Attn: Office of Petitions

If a request for reconsideration is filed, and a decision on the new petition is not received within three months, petitioner may wish to call the number below to check on the status of the renewed petition.

Since the original petition was filed on July 30, 2004, petitioner's deposit account will be charged for a two month extension of time.

Telephone inquiries should be directed to Petitions Attorney Steven Brantley at (571) 272-3203.

Charles Steven Brantley
Petitions Attorney
Office of Petitions

UNITED STATES PATENT AND TRADEMARK OFFICE

Commissioner for Patents
United States Patent and Trademark Office
P.O. Box 1450
Alexandria, VA 22313-1450
www.uspto.gov

James R. Brueggemann, Esquire
Sheppard, Mullin, Richter & Hampton LLP
333 South Hope Street, 48th Floor
Los Angeles, CA 90071-1448

COPY MAILED

APR 21 2005

OFFICE OF PETITIONS

In re Application of Olsavsky et al. Application No. 29/198,007 Filed: January 22, 2004 Attorney Docket No. 0EKM-109435 For: Golf Club Head	: : : : : :	Decision according status under 37 CFR 1.47(a)

This is a decision on the renewed petition under 37 CFR 1.47(a), filed March 24, 2005.

The petition is **granted**.

The above-identified application and papers have been reviewed and found in compliance with 37 CFR 1.47(a). This application is hereby accorded Rule 1.47(a) status.

As provided in Rule 1.47(c), this Office will forward notice of this application's filing to the non-signing inventor at the address given in the petition. Notice of the filing of this application will also be published in the Official Gazette.

The Office of Initial Patent Examination will be informed of the instant decision.

Telephone inquiries should be directed to Petitions Attorney Steven Brantley at (571) 272-3203.

Charles Steven Brantley
Petitions Attorney
Office of Petitions

UNITED STATES PATENT AND TRADEMARK OFFICE

Commissioner for Patents
United States Patent and Trademark Office
P.O. Box 1450
Alexandria, VA 22313-1450
www.uspto.gov

Paper No.

Craig N. Killen
Nelson Mullins Riley &
Scarborough
P.O. Box 11070
Columbia SC 29211

COPY MAILED

JAN 25 2007

OFFICE OF PETITIONS

In re Application of	:	
Nancy Rhodes	:	DECISION ON
Application No. 29/198,008	:	PETITION
Filed: January 23, 2004	:	
Atty Docket No. 15911-09058	:	

This is a decision on the PETITION TO REVIVE UNINTENTIONALLY ABANDONED APPLICATION UNDER 37 C.F.R. 1.137(b) filed June 6, 2006.

The petition is **DISMISSED**.

Any request for reconsideration of this decision must be submitted within TWO (2) MONTHS from the mail date of this decision. Extensions of time under 37 C.F.R. § 1.136(a) are permitted. The reconsideration request should include a cover letter entitled "Renewed Petition under 37 C.F.R. § 1.137(b)."

The above-identified application became abandoned for failure to timely pay the required issue fee within the statutory period of three months from the mailing date, January 28, 2005, of the Notice of Allowance. On April 28, 2005, applicant filed an unambiguous Request for Continued Examination (RCE). As this

was improper[1], and no further period for reply could be obtained, the application became abandoned effective April 29, 2005. A courtesy Notice of Abandonment was mailed on June 14, 2006.

The instant petition was promptly filed. The petition includes a proposed reply in the form of a continued prosecution application (CPA), payment of the petition fee, the required statement of unintentional delay and a terminal disclaimer (and disclaimer fee).

While the revival of applications abandoned for failure to timely prosecute and for failure to timely pay the issue fee are incorporated together in 37 CFR 1.137, the statutory provisions for the revival of an application abandoned for failure to timely prosecute and for failure to timely submit the issue fee are mutually exclusive. See Brenner v. Ebbert, 398 F.2d 762, 157 USPQ 609 (D.C. Cir. 1968). 35 U.S.C. 151 authorizes the acceptance of a delayed payment of the issue fee, if the issue fee "is submitted ... and the delay in payment is shown to have been unavoidable." 35 U.S.C. 41(a)(7) likewise authorizes the acceptance of an "unintentionally delayed payment of the fee for issuing each patent." Thus, 35 U.S.C. 41(a)(7) and 151 each require payment of the issue fee as a condition of reviving an application abandoned or patent lapsed for failure to pay the issue fee. Therefore, the filing of a continuing application without payment of the issue fee or any outstanding balance thereof is not an acceptable reply in an application abandoned or patent lapsed for failure to pay the issue fee or any portion thereof.

In order to revive this application abandoned for failure to pay the issue fee, petitioner must submit payment of the issue fee.

Petitioner is advised that the issue fee paid in the parent application is not refundable nor can it be applied towards any new Notice of Allowance, which may issue on the CPA.

Further correspondence with respect to this decision should be addressed as follows:

---

[1] If, however, applicant files an unambiguous transmittal paper that is an RCE in a design application, it will be treated as an improper RCE. A "Notice of Improper Request for Continued Examination (RCE)" was mailed on June 9, 2006. An RCE is not a type of new application filing. Therefore, the Office cannot convert an RCE (whether proper or improper) to a new application such as a CPA under 37 CFR 1.53(d). See MPEP 706.07(h).

By mail: Mail Stop Petition
Commissioner for Patents
P.O. Box 1450
Alexandria, VA 22313-1450

By FAX: (571) 273-8300
ATTN: NANCY JOHNSON
SENIOR PETITIONS ATTORNEY

By hand: Customer Service Window
Randolph Building
401 Dulany Street
Alexandria, VA 22314

Telephone inquiries specific to this matter should be directed to the undersigned at (571) 272-3219.

Nancy Johnson
Senior Petitions Attorney
Office of Petitions

UNITED STATES PATENT AND TRADEMARK OFFICE

Commissioner for Patents
United States Patent and Trademark Office
P.O. Box 1450
Alexandria, VA 22313-1450
www.uspto.gov

Paper No.

Craig N. Killen
Nelson Mullins Riley &
Scarborough
P.O. Box 11070
Columbia SC 29211

COPY MAILED

MAY 25 2007

OFFICE OF PETITIONS

In re Application of	:	
Nancy Rhodes	:	DECISION ON
Application No. 29/198,008	:	PETITION
Filed: January 23, 2004	:	
Atty Docket No. 15911-09058	:	

This is a decision on the RENEWED PETITION UNDER 37 CFR 1.137(b) filed March 19, 2007.

The petition is **GRANTED**.

The above-identified application became abandoned for failure to timely pay the required issue fee within the statutory period of three months from the mailing date, January 28, 2005, of the Notice of Allowance. On April 28, 2005, applicant filed an unambiguous Request for Continued Examination (RCE). As this was improper, and no further period for reply could be obtained, the application became abandoned effective April 29, 2005. A courtesy Notice of Abandonment was mailed on June 14, 2006.

By decision mailed January 25, 2007, the initial petition to revive filed June 6, 2006 was dismissed. The petition included a proposed reply in the form of a continued prosecution application (CPA). However, because the application became abandoned for failure to timely pay the issue fee, submission of

the issue fee was required for revival. The petition also included a new Terminal Disclaimer to Accompany Petition.

Applicants have now met all requirements for revival.

Petitioner is again advised that the issue fee paid in the parent application is not refundable nor can it be applied towards any new Notice of Allowance, which may issue on the CPA.

Technology Center AU 2911 has been advised of this decision. The application is being forwarded to Technology Center AU 2911 for processing of the continued prosecution application (CPA) filed June 6, 2006.

Telephone inquiries specific to this matter should be directed to the undersigned at (571) 272-3219.

Nancy Johnson
Senior Petitions Attorney
Office of Petitions

UNITED STATES PATENT AND TRADEMARK OFFICE

Commissioner for Patents
United States Patent and Trademark Office
P.O. Box 1450
Alexandria, VA 22313-1450
www.uspto.gov

BEESON SKINNER BEVERLY, LLP
ONE KAISER PLAZA
SUITE 2360
OAKLAND, CA 94612

6/24/05

In re Application of
Shannon Dow
Serial No.: 29/198,067
Filed: January 22, 2004
Attorney Docket No.: K3014-001D

: PETITION DECISION

This is a decision on applicant's petition to revive patent application under 37 CFR 1.137(b), filed April 15, 2005, to revive an unintentionally abandoned application.

This application became abandoned for failure to respond to the Notice of Allowance mailed January 6, 2005, which set a three-month statutory period to submit the Issue Fee and formal drawings. As no response was received by April 6, 2005, the application was abandoned; applicant then filed this petition.

A grantable petition for a design application under 37 CFR 1.137(b), as revised December 1, 1997, requires four items: (1) a petition and petition fee; (2) a complete response if not earlier made; (3) a statement that the entire period of delay in prosecution was unintentional; and (4) a terminal disclaimer and disclaimer fee. The requirement for a terminal disclaimer has been waived, as the petition was filed before the mailing of the Notice of Abandonment.

Applicant's petition is **GRANTED**.

The application will be forwarded to Publication Division for printing as a patent in due course.

The terminal disclaimer fee of $65.00 will be refunded to applicant's Deposit account 19-2383, as directed.

Should there be any questions with respect to this decision, please contact Sandra Morris; by mail addressed to: Director, Technology Center 1700/2900, P.O. Box 1450, Alexandria, VA 22313-1450; or by telephone at (571) 272-2622.

Jacqueline M. Stone

Jacqueline Stone
Director, Technology Center 1700/2900

UNITED STATES PATENT AND TRADEMARK OFFICE

Commissioner for Patents
United States Patent and Trademark Office
P.O. Box 1450
Alexandria, VA 22313-1450
www.uspto.gov

DARRELL F. MARQUETTE
KARSTEN MANUFACTURING CORPORATION
2201 W. DESERT COVE
PHOENIX, AZ 85029

COPY MAILED

FEB 17 2005

OFFICE OF PETITIONS

In re Application of	:
John C. Souza et al	: DECISION GRANTING PETITION
Application No. 29/198,071	: UNDER 37 CFR 1.313(c)(3)
Filed: January 23, 2004	:
Attorney Docket No. KMC-584A	:

This is a decision on the petition under 37 CFR 1.313(c)(3), filed January 13, 2004 to withdraw the above-identified application from issue after payment of the issue fee.

The petition is **GRANTED**.

The above-identified application is hereby withdrawn from issue in favor of a continued prosecution application (CPA) under 37 CFR 1.53(d).

Petitioner is advised that the issue fee paid on December 6, 2004 in the parent application is not refundable nor can it be applied towards any new Notice of Allowance which may issue on the CPA filed January 13, 2004.

It is noted that the CPA request filed with the instant petition was also accompanied by a specification. However, pursuant to a telephone conversation with petitioner (Mr. Darrell F. Marquette) on February 15, 2005, petitioner stated that this specification is merely a copy of the instant design application as originally filed and was not meant to be the filing of a new application under 37 CFR 1.53(b). Accordingly, the specification submitted with the instant petition will not be processed as a new application but merely placed in the file and marked as a copy of the original design application.

Telephone inquiries should be directed to the undersigned at (571) 272-3218.

This matter is being referred to Technology Center AU 2912 for processing of the CPA, consideration of the IDS and appropriate action on the preliminary amendment submitted concurrently with the instant petition.

Frances Hicks

Frances Hicks
Petitions Examiner
Office of Petitions
Office of the Deputy Commissioner
for Patent Examination Policy

UNITED STATES PATENT AND TRADEMARK OFFICE

Commissioner for Patents
United States Patent and Trademark Office
P.O. Box 1450
Alexandria, VA 22313-1450
www.uspto.gov

CHARLES Y. LACKEY
P.O. BOX 5871
WINSTON-SALEM, NC 27113-5871

COPY MAILED

APR 19 2006

OFFICE OF PETITIONS

ON PETITION

In re Application of :
Joseph Brian Russell :
Application No. 29/198,097 :
Filed: January 26, 2004 :
Attorney Docket No. N/A :

This is a decision on the petition under 37 CFR 1.137(a), filed January 3, 2006, to revive the above-identified application.

The petition is **GRANTED**.

This application became abandoned for failure to timely pay the issue fee on or before October 12, 2005 and to timely file corrected drawings on or before October 12, 2005 as required by the Notice of Allowability mailed July 12, 2005. Accordingly, this application became abandoned on October 13, 2005. A Notice of Abandonment was mailed on December 7, 2005.

This application is being forwarded to Technology Center 2900 for review of the drawings filed January 3, 2006.

Telephone inquiries concerning this matter may be directed to the undersigned at (571) 272-3228.

Edward J. Tannouse
Petitions Attorney
Office of Petitions
Office of the Deputy Commissioner
for Patent Examination Policy

UNITED STATES PATENT AND TRADEMARK OFFICE

Commissioner for Patents
United States Patent and Trademark Office
P.O. Box 1450
Alexandria, VA 22313-1450
www.uspto.gov

NIKOLAI & MERSEREAU, P.A.
900 SECOND AVENUE SOUTH
SUITE 820
MINNEAPOLIS, MN 55402

COPY MAILED
APR 1 8 2006
OFFICE OF PETITIONS

Patent No. D497183 :
Issue Date: October 12, 2004 :
Application No. 29/198,112 : ON PETITION
Filed: January 20, 2004 :
Attorney Docket No. DUSA040124 :

This is a decision on the papers styled, "Petition For Original Copy," filed March 23, 2006, which has been treated as a petition under 37 CFR 1.182, requesting issuance of a duplicate Letters Patent for the above-identified application.

Petitioner requests issuance of duplicate letters patent due to non-receipt of the original letters patent.

The showing required to establish non-receipt of an Office communication, in this instance, the letters patent, must include a statement from the practitioner stating that the Office communication was not received by the practitioner and attesting to the fact that a search of the file jacket and docket records indicates that the Office communication was not received. A copy of the docket, or any postal or office records where the non-received Office communication would have been entered had it been received, must be attached to and referenced in practitioner's statement.

Accordingly, the petition is **dismissed**.

The $400.00 petition fee (37 CFR 1.17(f)) will be charged to deposit account no. 08-1265.

Further correspondence with respect to this matter should be addressed as follows:

By mail: Mail Stop Petition
Commissioner for Patents
Box 1450
Alexandria, VA 22313

By FAX: (571) 273-8300
Attn: Office of Petitions

By hand: Customer Service Window
Randolph Building
401 Dulany Street
Alexandria, VA 22314

Any questions concerning this matter may be directed to the undersigned at (571) 272-3228.

Edward J. Tannouse
Petitions Attorney
Office of Petitions
Office of the Deputy Commissioner
for Patent Examination Policy

UNITED STATES PATENT AND TRADEMARK OFFICE

Commissioner for Patents
United States Patent and Trademark Office
P.O. Box 1450
Alexandria, VA 22313-1450
www.uspto.gov

SEP 2 8 2005

In re Application of	:	
STAHL.	:	
Serial Number: 29/198,122	:	PETITION UNDER
Filed: January 26, 2004	:	M.P.E.P.708.02
For: MAGNETICALLY ASSISTED GENERATOR SHAFT	:	

This is in response to the petition filed September 15, 2005, requesting that the above-identified application be granted Special Status under Sections 708.02 of the MPEP (**no fee required**). The petitioner asserts that the invention will save energy. MPEP 708.02 VI indicates special status will be granted to patent applications for inventions which materially contribute to (A) the discovery or development of energy resources, or (B) the more efficient utilization and conservation of energy resources.

It is noted the instant application is an application for a design patent. In a design patent application, the subject matter, which is claimed, is the design embodied in or applied to an article of manufacture and not the article itself. The subject matter of a design patent application may relate to the configuration or shape of an article, to surface ornamentation applied to an article or a combination of the two. The declaration accompanying the petition explaining how the invention contributes to the more efficient utilization and conservation of energy resources is directed to the way in which the shaft is used and includes details, such as the inclusion of magnets, which are not covered in the instant design application. As such, the configuration of the shaft alone, as claimed in the design application, would not produce the energy savings indicated in the declaration accompanying the petition.

The petition is **DISMISSED.**

R Crispino

Richard Crispino, Special Programs Examiner
Technology Center 1700
Chemical and Materials Engineering

Michael Anthony Stahl
2902 Gallalee Road
Huntsville, AL 35801

PET DEC

O I P E IAP27
NOV 28 2005
PATENT & TRADEMARK OFFICE

PTO/SB/83 (04-05)
Approved for use through 11/30/2005. OMB 0651-0035
U.S. Patent and Trademark Office, U.S. DEPARTMENT OF COMMERCE
Under the Paperwork Reduction Act of 1995, no persons are required to respond to a collection of information unless it displays a valid OMB control number.

REQUEST FOR WITHDRAWAL AS ATTORNEY OR AGENT AND CHANGE OF CORRESPONDENCE ADDRESS

Application Number	29/198,138
Filing Date	01/24/2004
First Named Inventor	Jerome L. Kvistad
Art Unit	2912
Examiner Name	Siegel, Mitchell
Attorney Docket Number	1050-002

To: Commissioner for Patents
P.O. Box 1450
Alexandria, VA 22313-1450

Approved 9/21/06
Jacqueline M. Stone, Director
Technology Center 1700/2900

Please withdraw me as attorney or agent for the above identified patent application, and

- ☐ all the attorneys/agents of record.
- ☐ the attorneys/agents (with registration numbers) listed on the attached paper(s), or
- ☑ the attorneys/agents associated with Customer Number 00044163

NOTE: This box can only be checked when the power of attorney of record in the application is to all the practitioners associated with a customer number.

The reasons for this request are: Client wishes to manage application from this point.

CORRESPONDENCE ADDRESS

1. ☐ The correspondence address is NOT affected by this withdrawal.
2. ☑ Change the correspondence address and direct all future correspondence to:

☐ The address associated with Customer Number:

OR

☐ Firm *or* Individual Name					
Address	Jerome L. Kvistad USA Amusements, Inc. 240 - 103rd Avenue NW				
City	Coon Rapids	State	MN	Zip	55448
Country	US				
Telephone	763-757-6129			Email	
Signature					
Name	Kevin W. Cyr			Registration No.	40,976
Date	November 23, 2005			Telephone No.	952-545-8755

NOTE: Withdrawal is effective when approved rather than when received. Unless there are at least 30 days between approval of withdrawal and the expiration date of a time period for response or possible extension period, the request to withdraw is normally disapproved.

This collection of information is required by 37 CFR 1.36. The information is required to obtain or retain a benefit by the public which is to file (and by the USPTO to process) an application. Confidentiality is governed by 35 U.S.C. 122 and 37 CFR 1.11 and 1.14. This collection is estimated to take 12 minutes to complete, including gathering, preparing, and submitting the completed application form to the USPTO. Time will vary depending upon the individual case. Any comments on the amount of time you require to complete this form and/or suggestions for reducing this burden, should be sent to the Chief Information Officer, U.S. Patent and Trademark Office, U.S. Department of Commerce, P.O. Box 1450, Alexandria, VA 22313-1450. DO NOT SEND FEES OR COMPLETED FORMS TO THIS ADDRESS. SEND TO: **Commissioner for Patents, P.O. Box 1450, Alexandria, VA 22313-1450.**

If you need assistance in completing the form, call 1-800-PTO-9199 and select option 2.

UNITED STATES PATENT AND TRADEMARK OFFICE

COMMISSIONER FOR PATENTS
UNITED STATES PATENT AND TRADEMARK OFFICE
P.O. BOX 1450
ALEXANDRIA, VA 22313-1450
www.uspto.gov

STEVEN RABIN
RABIN & BERDO, P.C.
1101 14TH STREET, SUITE 500
WASHINGTON, DC 20005

COPY MAILED

MAY 17 2007

OFFICE OF PETITIONS

In re Patent No. D-519,888	:	
Issue Date: May 2, 2006	:	
Application No. 29/198,165	:	NOTICE OF FEE DUE
Filed: January 26, 2004	:	UNDER 37 CFR 1.28(c)
Attorney Docket No. TAIW 605-131	:	

This is in response to the petition under 37 CFR 1.28(c), filed September 29, 2006, to accept a fee deficiency.

The petition is dismissed.

The fee payment is deficient by $90. Accordingly, in order to accept the fee deficiency payment under 37 CFR 1.28(c), the balance due of $90 must be submitted.

Further correspondence with respect to this matter should be addressed as follows:

By Mail: Mail Stop PETITION
Commissioner for Patents
P. O. Box 1450
Alexandria, VA 22313-1450

By hand: U. S. Patent and Trademark Office
Customer Service Window, Mail Stop Petitions
Randolph Building
401 Dulany Street
Alexandria, VA 22314

The centralized facsimile number is **(571) 273-8300.**

Telephone inquiries concerning this decision should be directed to the undersigned at (571) 272-3218.

Frances Hicks
Petitions Examiner
Office of Petitions

UNITED STATES PATENT AND TRADEMARK OFFICE

Commissioner for Patents
United States Patent and Trademark Office
P.O. Box 1450
Alexandria, VA 22313-1450
www.uspto.gov

STEVEN RABIN
RABIN & BERDO, P.C.
1101 14TH STREET, SUITE 500
WASHINGTON, DC 20005

COPY MAILED

JUN 27 2007

OFFICE OF PETITIONS

In re Patent No. D-519,888	:	
Issue Date: May 2, 2006	:	
Application No. 29/198,165	:	NOTICE
Filed: January 26, 2004	:	
Attorney Docket No. TAIW 605-131	:	

This is a notice regarding your request, filed September 29, 2006, for acceptance of a fee deficiency submission under 37 CFR 1.28.[1] On September 1, 1998, the Court of Appeals for the Federal Circuit held that 37 CFR 1.28(c) is the sole provision governing the time for correction of the erroneous payment of the issue fee as a small entity. **See DH Technology v. Synergystex International, Inc. 154 F.3d 1333, 47 USPQ2d 1865 (Fed. Cir. Sept. 1, 1998).**

The Office no longer investigates or rejects original or reissue applications under 37 CFR 1.56. **1098 Off. Gaz. Pat. Office 502 (January 3, 1989)**. Therefore, nothing in this Notice is intended to imply that an investigation was done.

Your fee deficiency submission under 37 CFR 1.28 is hereby **ACCEPTED**.

This file is no longer entitled to small entity status.

Inquiries related to this communication should be directed to the undersigned at (571) 272-3218.

Frances Hicks
Petitions Examiner
Office of Petitions

[1] The decision mailed May 17, 2007 is vacated.

UNITED STATES PATENT AND TRADEMARK OFFICE

COMMISSIONER FOR PATENTS
UNITED STATES PATENT AND TRADEMARK OFFICE
P.O. BOX 1450
ALEXANDRIA, VA 22313-1450
www.uspto.gov

APR 07 2004

TRASK BRITT
P.O. BOX 2550
SALT LAKE CITY UT 84110

In re Application of	:	
Steven F. Smith	:	
Serial No.: 29/198,219	:	DECISION ON PETITION
Filed: January 27, 2004	:	
For: Side Element Of A Shoe Upper	:	

This is in response to the petition applicant filed on January 30, 2004 to make the above-identified application special under the provisions of 37 CFR 1.102(d).

Applicant has satisfied the provisions set forth in M.P.E.P. 708.02, VIII, thus the petition is **GRANTED**.

The application will be forwarded to the examiner for action on the merits commensurate with this decision.

Should there be any questions with regard to this letter please contact John Kittle by letter addressed to the Director, Technology Center 3700/2900, P.O. Box 1450 Alexandria, VA 22313-1450, or by telephone at (703) 308-0873 or by facsimile transmission at (703) 308-3139.

John E. Kittle
Director
Technology Center 3700/2900

UNITED STATES PATENT AND TRADEMARK OFFICE

NOV 18 2004

COMMISSIONER FOR PATENTS
UNITED STATES PATENT AND TRADEMARK OFFICE
P.O. BOX 1450
ALEXANDRIA, VA 22313-1450
www.uspto.gov

MARK J MURPHY
COOK, ALEX, MCFARRON, MANZO
CUMMINGS & MEHLER, LTD.
200 W. ADAMS STREET, SUITE 2850
CHICAGO, IL 60606

In re Application of	
Robert Farber	:
Serial No.: 29/198,224	:
Filed: January 27, 2004	: PETITION DECISION
Attorney Docket No.: 1407-0010	:
	:

This is a decision on applicant's petition to revive patent application under 37 CFR 1.137(b), filed on September 2, 2004, to revive an unintentionally abandoned application.

This application became abandoned for failure to timely respond to the Notice of Allowance and Issue fee due mailed April 20, 2004. Applicant filed a Request for Continued Examination (RCE) on June 3, 2004; applicant was advised that this request was denied August 25, 2004, as RCE's do not apply to design patent applications. This petition followed.

A grantable petition under 37 CFR 1.137(b), as revised December 1, 1997, requires four items: (1) a petition and petition fee; (2) a complete response if not earlier made; (3) a statement that the entire period of delay in prosecution was unintentional; and (4) a terminal disclaimer and disclaimer fee. The filing of a Continued Prosecution Application (CPA) is considered a proper response. Applicant is advised that as the petition was filed before the mailing of the Notice of Abandonment, the requirement for a terminal disclaimer was been waived.

Applicant's petition is **GRANTED**.

The $55.00 terminal disclaimer fee and $385.00 RCE fee will be credited, and the $640.00 fee for the CPA will be withdrawn from applicant's Deposit Account 50-1039, as directed.

The application will be forwarded to be processed as a CPA in due course.

Should there be any questions with respect to this decision, please contact Sandra Morris; by mail addressed to: Director, Technology Center 3700/2900, P.O. Box 1450, Alexandria, VA 22313-1450; or by telephone at (571) 272-2622.

John Kittle
Director, Technology Center 3700/2900

UNITED STATES PATENT AND TRADEMARK OFFICE

COMMISSIONER FOR PATENTS
UNITED STATES PATENT AND TRADEMARK OFFICE
P.O. BOX 1450
ALEXANDRIA, VA 22313-1450
www.uspto.gov

APR 01 2004

TRASK BRITT
P.O. BOX 2550
SALT LAKE CITY UT 84110

In re Application of	:	
Scott Patt	:	
Serial No.: 29/198,254	:	DECISION ON PETITION
Filed: January 27, 2004	:	
For: Side Element Of A Shoe Upper	:	

This is in response to the petition applicant filed on January 27, 2004 to make the above-identified application special under the provisions of 37 CFR 1.102(d).

Applicant has satisfied the provisions set forth in M.P.E.P. 708.02, VIII, thus the petition is **GRANTED**.

The application will be forwarded to the examiner for action on the merits commensurate with this decision.

Should there be any questions with regard to this letter please contact John Kittle by letter addressed to the Director, Technology Center 3700/2900, P.O. Box 1450 Alexandria, VA 22313-1450, or by telephone at (703) 308-0873 or by facsimile transmission at (703) 308-3139.

John E. Kittle
Director
Technology Center 3700/2900

IN THE UNITED STATES PATENT AND TRADEMARK OFFICE

Applicant(s): Brandenburg	
Serial No.: 29/198,255	Art Unit: 2912
Filed: 1/27/2004	
Title: Case for Holding a Music Player	Examiner: Prabhakar G. Deshmukh
Attorney Docket No.: 089987	

PETITION TO MAKE SPECIAL UNDER 37 C.F.R. 1.102(d)

Commissioner for Patents
P.O. Box 1450
Alexandria, VA 22313-1450

Dear Sir:

This is a Petition to Make Special the above-identified patent application. The 1.17(h) petition fee has been provided via the attached Petition Fee Transmittal. The basis for this petition is that the design is being infringed.

In accordance with MPEP 708.02 II:

(a) there is an infringing product actually on the market, as evidenced by Attachment 1. The product is available at http://www.macally.com. The product was first observed at a trade show on Jan. 11, 2005;

(b) A rigid comparison of the alleged infringing product with the claim of the pending application has been made, particularly Figures 14-17 (reproduced for convenience in Attachment 2), and the claim is unquestionably infringed;

(c) a thorough search of the prior art has been made and was submitted with the original patent application on Form PTO-1449. The most pertinent prior art is attached hereto (Attachment 3).

PETITION GRANTED

William Krynski
Special Program Examiner
TC 1700
APR - 4 2005

Attorney Docket No. 03-1229.01

Application Serial No. 29/198,261

OIPE JC163
APR 1 1 2005
PATENT & TRADEMARK OFFICE

IN THE UNITED STATES PATENT AND TRADEMARK OFFICE

In re the application of:		)	
	Lee Bender	)	
Serial No.:	29/198,261	)	Art Unit: 2913
Filed:	January 27, 2004	)	Stevens, Maurice
For:	Ornamental Design for an	)	Docket No. 03-1229.01
	Auto Intake Plenum	)	
		)	
		)	

37 C.F.R. § 1.102 PETITION TO MAKE SPECIAL DUE TO INFRINGEMENT

Commissioner for Patents
P.O. Box 1450
Alexandria, VA 22313-1450
Attn: Special Program Examiner:

Dear Sir or Madam:

Applicant hereby petition to make this application special because the application is directed to an invention that is, in the opinion of the Applicant's Attorney, actually infringed. As a showing of this fact, accompanying this petition is a declaration by the Applicant's Attorney, George P. Kobler, that there is an infringing product actually on the market, that a rigid comparison of the alleged infringing product has been made, and that, in his opinion, some of the claims are unquestionably infringed, and that he has caused to be made a careful and thorough search of the prior art.

04/12/2005 TBESHAH1 00000037 29198261
01 FC:1464 130.00 OP

PETITION GRANTED

Richard Crispino
Special Program Examiner
Technology Center 1700
MAY 25 2005

UNITED STATES PATENT AND TRADEMARK OFFICE

Commissioner for Patents
United States Patent and Trademark Office
P.O. Box 1450
Alexandria, VA 22313-1450
www.uspto.gov

SEP 17 2004

KCO LAW P.L.L.C.
/DBA KEADY, OLDS & MAIER, PLLC
128 NORTH PITT STREET, 2ND FLOOR
ALEXANDRIA VA 22314

In re Application of	:	
Thomas J. Wood	:	
Serial No. 29/198,316	:	DECISION ON PETITION
Filed: January 29, 2004	:	
Title: Nasal Interface Including Ventilation Insert	:	

This is in response to applicants' petition filed June 23, 2004, to make the above-identified application special under the provisions of 37 CFR 1.102(c), based on the age of the applicant.

Applicant has satisfied the provisions set forth in M.P.E.P. 708.02, IV. Therefore the petition is **GRANTED**.

The application will be forwarded to the examiner for action on the merits commensurate with this decision.

Should there be any questions with regard to this letter please contact John Kittle by letter addressed to the Director, Technology Center 3700/2900, P.O. Box 1450 Alexandria, VA 22313-1450, or by telephone at (703) 308-0873 or by facsimile transmission at (703) 308-3139.

John E. Kittle
Director
Technology Center 3700/2900

UNITED STATES PATENT AND TRADEMARK OFFICE

Commissioner for Patents
United States Patent and Trademark Office
P.O. Box 1450
Alexandria, VA 22313-1450
www.uspto.gov

KOLISCH HARTWELL, P.C.
520 S.W. YAMHILL STREET
SUITE 200
PORTLAND OR 97204

COPY MAILED

AUG 2 5 2004

OFFICE OF PETITIONS

In re Application of :
Bjorn Refsum :
Application No. 29/198,340 :
Filed: January 27, 2004 :
Attorney Docket No. OPA 309DIV :

NOTICE

This is a notice regarding your request for acceptance of a fee deficiency submission under 37 CFR 1.28. On September 1, 1998, the Court of Appeals for the Federal Circuit held that 37 CFR 1.28(c) is the sole provision governing the time for correction of the erroneous payment of the issue fee as a small entity. **See DH Technology v. Synergystex International, Inc. 154 F.3d 1333, 47 USPQ2d 1865 (Fed. Cir. Sept. 1, 1998).**

The Office no longer investigates or rejects original or reissue applications under 37 CFR 1.56. **1098 Off. Gaz. Pat. Office 502 (January 3, 1989).** Therefore, nothing in this Notice is intended to imply that an investigation was done.

Your fee deficiency submission under 37 CFR 1.28 is hereby **ACCEPTED.**

Inquiries related to this communication should be directed to the undersigned at (703) 305-8859.

This file is being referred to the Office of Initial Patent Examination.

Karen Creasy

Karen Creasy
Petitions Examiner
Office of Petitions
Office of the Deputy Commissioner
for Patent Examination Policy

UNITED STATES PATENT AND TRADEMARK OFFICE

Commissioner for Patents
United States Patent and Trademark Office
P.O. Box 1450
Alexandria, VA 22313-1450
www.uspto.gov

KOLISCH HARTWELL, P.C.
520 S.W. YAMHILL STREET
SUITE 200
PORTLAND OR 97204

COPY MAILED

AUG 2 5 2004

OFFICE OF PETITIONS

In re Application of :
Bjorn Refsum :
Application No. 29/198,342 :
Filed: January 27, 2004 :
Attorney Docket No. OPA 309DIV1 :

NOTICE

This is a notice regarding your request for acceptance of a fee deficiency submission under 37 CFR 1.28. On September 1, 1998, the Court of Appeals for the Federal Circuit held that 37 CFR 1.28(c) is the sole provision governing the time for correction of the erroneous payment of the issue fee as a small entity. **See DH Technology v. Synergystex International, Inc. 154 F.3d 1333, 47 USPQ2d 1865 (Fed. Cir. Sept. 1, 1998).**

The Office no longer investigates or rejects original or reissue applications under 37 CFR 1.56. **1098 Off. Gaz. Pat. Office 502 (January 3, 1989).** Therefore, nothing in this Notice is intended to imply that an investigation was done.

Your fee deficiency submission under 37 CFR 1.28 is hereby **ACCEPTED.**

Inquiries related to this communication should be directed to the undersigned at (703) 305-8859.

This file is being referred to the Office of Initial Patent Examination.

Karen Creasy

Karen Creasy
Petitions Examiner
Office of Petitions
Office of the Deputy Commissioner
for Patent Examination Policy

SPE RESPONSE FOR CERTIFICATE OF CORRECTION

Paper No.: _____

DATE : 4/7/06

TO SPE OF : ART UNIT 2913

SUBJECT : Request for Certificate of Correction for Appl. No.: 29198347 Patent No.: D510508

Please respond to this request for a certificate of correction within 7 days.

Please review the requested changes/corrections as shown in the **COCIN** document(s) in the IFW application image. No new matter should be introduced, nor should the scope or meaning of the claims be changed.

Please complete the response (see below) and forward the completed response to scanning using document code **COCX**.

Valerie Jackson
Certificates of Correction Branch
703-308-9390 ext. 114

Thank You For Your Assistance

The request for issuing the above-identified correction(s) is hereby:

Note your decision on the appropriate box.

- [X] **Approved** — All changes apply.
- [ ] **Approved in Part** — Specify below which changes **do not** apply.
- [ ] **Denied** — State the reasons for denial below.

Comments: _____

Caron D Veynar
CARON D. VEYNAR
SUPERVISORY PATENT EXAMINER

CARON D. VEYNAR
SUPERVISORY PATENT EXAMINER

SPE

2913
Art Unit

PTOL-306 (REV. 7/03)

U.S. DEPARTMENT OF COMMERCE Patent and Trademark Office

UNITED STATES PATENT AND TRADEMARK OFFICE

COMMISSIONER FOR PATENTS
UNITED STATES PATENT AND TRADEMARK OFFICE
P.O. BOX 1450
ALEXANDRIA, VA 22313-1450
www.uspto.gov

ATTENTION OF CHARLES A. JACOBSON
MERCHANT & GOULD P.C.
P.O. BOX 2903
MINNEAPOLIS, MN 55402-0903

6/24/05

In re Application of
Walter Thomas Bray Jr.
Serial No.: 29/198,389
Filed: January 28, 2004
Attorney Docket No.: 8530.605USD1

: PETITION DECISION

This is a decision on applicant's petition to revive patent application under 37 CFR 1.137(b), received April 22, 2005, to revive an unintentionally abandoned application.

This application became abandoned for failure to timely respond to the Notice of Allowance mailed June 18, 2004. Applicant filed a Request for Continued Examination (RCE) on September 17, 2004; applicant was advised that this request was denied March 7, 2005, as RCE's do not apply to design patent applications. Therefore, as a complete response was not received by September 20, 2004, the application was abandoned; this petition followed.

A grantable petition under 37 CFR 1.137(b), as revised December 1, 1997, requires four items: (1) a petition and petition fee; (2) a complete response if not earlier made; (3) a statement that the entire period of delay in prosecution was unintentional; and (4) a terminal disclaimer and disclaimer fee. Applicant is advised that as the petition was filed before the mailing of the Notice of Abandonment, the requirement for a terminal disclaimer was been waived.

Applicant's petition is **GRANTED**.

The application will be forwarded to Publications Branch to be printed as a patent in due course.

Should there be any questions with respect to this decision, please contact Sandra Morris; by mail addressed to: Director, Technology Center 1700/2900, P.O. Box 1450, Alexandria, VA 22313-1450; or by telephone at (571) 272-2622.

JMStone

Jacqueline Stone
Director, Technology Center 1700/2900

UNITED STATES PATENT AND TRADEMARK OFFICE

COMMISSIONER FOR PATENTS
UNITED STATES PATENT AND TRADEMARK OFFICE
P.O. BOX 1450
ALEXANDRIA, VA 22313-1450
www.uspto.gov

OCT 31 2005

SAND & SEBOLT
AEGIS TOWER, SUITE 1100
4940 MUNSON STREET, NW
CANTON OH 44718-3615

In re Application of
Robert S. Morrison
Serial No.: 29/ 198,416
Filed: January 28, 2004
Attorney Docket No.: 1579031US1CD

: PETITION DECISION

This is a decision on applicant's Petition to Accept Delayed Payment of Issue Fee, which is being treated as a Petition under 37 CFR 1.137(b) received November 15, 2004, to revive an unintentionally abandoned application.

This application became abandoned for failure to respond to the Notice of Allowance mailed July 20, 2004, which set a three-month statutory period to pay the Issue fee. As no response was submitted by October 20, 2004, the application was abandoned; this petition followed.

A grantable petition under 37 CFR 1.137(b), as revised December 1, 1997, requires four items: (1) a petition and petition fee; (2) a complete response if not earlier made; (3) a statement that the entire period of delay in prosecution was unintentional; and (4) a terminal disclaimer and disclaimer fee.

The statement that the delay in payment of the issue fee was unintentional will be accepted. It is construed as meaning that "the entire delay in filing the required reply from the due date for the reply until the filing of a grantable petition pursuant to 37 CFR 1.137(b) was unintentional." If this is an incorrect statement in view of the new rules, petitioner is required to provide a statement to that effect. Furthermore, because the Petition was filed before the mailing of the Notice of Abandonment, the requirement for a terminal disclaimer and fee has been waived.

Applicant's petition is **GRANTED.**

The application will be forwarded to Publications Branch to be issued into a Patent in due course.

Should there be any questions with respect to this decision, please contact Sandra Morris; by mail addressed to: Director, Technology Center 1700/2900, P.O. Box 1450, Alexandria, VA 22313-1450; or by telephone at (571) 272-2622.

Jacqueline Stone
Director, Technology Center 1700/2900

UNITED STATES PATENT AND TRADEMARK OFFICE

Commissioner for Patents
United States Patent and Trademark Office
P.O. Box 1450
Alexandria, VA 22313-1450
www.uspto.gov

MAINE & ASMUS
100 MAIN STREET
P O BOX 3445
NASHUA NH 03061-3445

COPY MAILED
SEP 0 6 2006
OFFICE OF PETITIONS

In re Patent No. D512687 :
Issue Date: December 13, 2005 :
Application No. 29/198,419 : ON PETITION
Filed: January 29, 2004 :
Attorney Docket Number: 81762/335 :

This is in response to the paper filed May 23, 2006 requesting that status as a Small Entity be removed and for acceptance of a fee deficiency submission. The paper is being treated as a petition under 37 CFR 1.28

On September 1, 1998, the Court of Appeals for the Federal Circuit held that 37 CFR 1.28(c) is the sole provision governing the time for correction of the erroneous payment of the issue fee as a small entity. See DH Technology v. Synergystex International, Inc.. 154 F.33d 1333, 47 USPQ2d 1865 (Fed. Cir. Sept. 1, 1998).

The Office no longer investigates or rejects original or reissue applications under 37 CFR 1.56. 1098 Off. Gaz. Pat. Office 502 (January 3, 1989). Therefore nothing in this Notice is intended to imply that an investigation was done.

Your fee deficiency submission under 37 CFR 1.28 is hereby accepted and the petition is **GRANTED**.

Inquiries related to this communication should be directed to the Office of Petitions Staff at (571) 272-3282.

Patricia Faison-Ball

Patricia Faison-Ball
Senior Petitions Attorney
Office of Petitions

UNITED STATES PATENT AND TRADEMARK OFFICE

Commissioner for Patents
United States Patent and Trademark Office
P.O. Box 1450
Alexandria, VA 22313-1450
www.uspto.gov

8/15/05

JOHN S. PRATT, ESQ.
KILPATRICK STOCKTON, LLP
1100 PEACHTREE STREET
ATLANTA, GA 30309

In re Application of
Carroll Broome
Serial No.: 29/198,422
Filed: January 29, 2004
Attorney Docket No.: 51683/296581

: PETITION DECISION

This is a decision on the Petition to Revive under 37 CFR 1.137(b), received June 16, 2005, to revive an unintentionally abandoned application. Applicant's assistance in submitting the issue fee transmittal form by facsimile was appreciated.

The petition is **DISMISSED**.

This application became abandoned for failure to respond to the Notice of Allowance and Issue Fee due, mailed October 7, 2004, which required payment of the Issue fee, a new oath or declaration, and formal drawings. As no response was received by January 7, 2005, the application was abandoned; this petition followed.

A grantable petition under 37 CFR 1.137(b), as revised December 1, 1997, requires four items: (1) a petition and petition fee; (2) a complete response if not earlier made; (3) a statement that the entire period of delay in prosecution was unintentional; and (4) a terminal disclaimer and disclaimer fee. Applicant's petition lacks item (2); applicant has not submitted the new oath or declaration and formal drawings required by the Examiner in the Examiner's amendment of October 7, 2004.

Any renewed petition in order to be considered timely must be filed within TWO MONTHS of the date of mailing of this decision.

Should there be any questions with respect to this decision, please contact Sandra Morris; by mail addressed to: Director, Technology Center 1700/2900, P.O. Box 1450, Alexandria, VA 22313-1450; or by telephone at (571) 272-2622.

Jacqueline M. Stone

Jacqueline Stone
Director, Technology Center 1700/2900

UNITED STATES PATENT AND TRADEMARK OFFICE

Commissioner for Patents
United States Patent and Trademark Office
P.O. Box 1450
Alexandria, VA 22313-1450
www.uspto.gov

JOHN S. PRATT, ESQ
KILPATRICK STOCKTON, LLP
1100 PEACHTREE STREET
ATLANTA GA 30309

COPY MAILED

OCT 20 2005

OFFICE OF PETITIONS

In re Application of
Carroll Broome :
Application No. 29/198,422 : ON PETITION
Filed: January 29, 2004 :
Attorney Docket Number: 51683/296581 :

This is a decision on the renewed petition, filed September 28, 2005 under 37 CFR 1.137(b)[1], to revive the above identified application.

The petition is **GRANTED**.

This application became abandoned January 8, 2005 for failure to pay the issue fee, file formal drawings and an oath or declaration. Accordingly, a Notice of Abandonment was mailed March 14, 2005. A petition to revive was filed June 16, 2005 with the issue fee but did not include the formal drawings and oath or declaration. Thus, a decision dismissing the petition was mailed August 15, 2005.

Comes now petitioner with the instant renewed petition, formal drawings and oath or declaration.

All other requirements of 37 CFR 1.137(b) having now been met, this matter is being referred to the Publishing Division for review of the drawings shown as having been received in the PTO on September 28, 2005.

Telephone inquiries concerning this matter may be directed to the undersigned Petitions Attorney at (571) 272-3212.

Patricia Faison-Ball

Patricia Faison-Ball
Senior Petitions Attorney
Office of Petitions

---

[1]Effective December 1, 1997, the provisions of 37 CFR 1.137(b) now provide that where the delay in reply was unintentional, a petition may be filed to revive an abandoned application or a lapsed patent pursuant to 37 CFR 1.137(b). A grantable petition filed under the provisions of 37 CFR 1.137(b) must be accompanied by:

(1) the required reply, unless previously filed. In a nonprovisional application abandoned for failure to prosecute, the required reply may be met by the filing of a continuing application. In an application or patent, abandoned or lapsed for failure to pay the issue fee or any portion thereof, the required reply must be the payment of the issue fee or any outstanding balance thereof.

(2) the petition fee as set forth in 37 CFR 1.17(m);

(3) a statement that the entire delay in filing the required reply from the due date for the reply until the filing of a grantable petition pursuant to 37 CFR 1.137(b) was unintentional. The Commissioner may required additional information where there is a question whether the delay was unintentional; and

(4) any terminal disclaimer (and fee as set forth in 37 CFR 1.20(d)) required pursuant to 37 CFR 1.137(c)).

UNITED STATES PATENT AND TRADEMARK OFFICE

Commissioner for Patents
United States Patent and Trademark Office
P.O. Box 1450
Alexandria, VA 22313-1450
www.uspto.gov

HOGAN & HARTSON LLP
IP GROUP, COLUMBIA SQUARE
555 THIRTEENTH STREET, N.W.
WASHINGTON DC 20004

COPY MAILED

AUG 1 0 2007

OFFICE OF PETITIONS

In re Patent No. D510,982	:	
Application No. 29/198,433	:	
Filed: January 30, 2004	:	ON PETITION
Issued: October 25, 2005	:	
Attorney Docket No. 82062-0102	:	

April 11, 2006This is a decision on the petition, filed April 11, 2006, which is being treated as a request under 37 CFR 3.81(b)[1] to correct the assignee's name on the Fee(s) Transmittal form PTOL-85(b) so that the Letters Patent will issue to the assignee. The Office regrets the delay in acting on the instant petition.

The request is **DISMISSED**.

Petitioner states that the correct assignee's name is "Paini SPA Rubinetterie" and that an incorrect assignee's name was included on the Part B - Fee(s) Transmittal form at the time of payment of the issue fee.

37 CFR 3.81(b), effective June 25, 2004, reads:

> *After payment of the issue fee:* Any request for issuance of an application in the name of the assignee submitted after the date of payment of the issue fee, and any request for a patent to be corrected to state the name of the assignee, must state that the assignment was submitted for recordation as set forth in § 3.11 before issuance of the patent, and must include a request for a certificate of correction under § 1.323 of this chapter (accompanied by the fee set forth in § 1.20(a)) and the processing fee set forth in § 1.17(i) of this chapter.

Petitioner states in the instant petition that a Request for a Certificate of Correction was filed October 5, 2005. After a review of the file, the document cannot be located. As petitioner has failed to comply with the provisions of 37 CFR 3.81(b), the request cannot be granted at this time. *See also* MPEP 1481.01.

A review of Office database assignment records reflects that an assignment to "Paini SPA Rubinetterie" has been recorded. Therefore, upon submission of the required certificate of correction and fee, it would be appropriate for the Office to issue a certificate of correction to correct the front page of the Letters Patent to reflect that "Paini SPA Rubinetterie" was the

[1] *See* MPEP 1309, subsection II and Official Gazette of June 22, 2004

assignee of record at the time of issuance of the application into a patent. *Note also* 35 U.S.C. § 152.

In view of the above, **the Certificates of Correction Branch is instructed to issue a certificate of correction upon submission by petitioner of a request for a certificate of correction (and fee) which sets forth "Paini SPA Rubinetterie", as the assignee**. *No certificate of correction will be issued which sets forth an assignee other than the assignee set forth in this request. A copy of this decision* ***must*** *accompany the request for a Certificate of Correction.*

No further renewed request under 37 CFR 3.81(b) is necessary for consideration by the Office of Petitions for issuance of a certificate of correction in the name of the assignee set forth in this request, since this decision operates as an instruction to the Certificates of Correction Branch to issue the requested certificate of correction.

Inquiries concerning this decision should be directed to Petitions Examiner Liana Walsh at (571) 272-3206. Any questions concerning issuance of a certificate of correction should be directed to the Certificates of Correction Branch at (571) 272-4200.

Liana Walsh for
Frances Hicks
Petitions Examiner
Office of Petitions

PTAC

OIPE IAP74 NOV 14 2007 PATENT & TRADEMARK OFFICE

HOGAN & HARTSON

Hogan & Hartson LLP
Columbia Square
555 Thirteenth Street, NW
Washington, DC 20004
+1.202.637.5600 Tel
+1.202.637.5910 Fax

www.hhlaw.com

TELECOPY/FACSIMILE

To:	Company:	Fax Number:	Tel Number:
Examiner Tan-Uyen (Jackie) Ho	U.S. Patent and Trademark Office	571-273-2885	571-272-4200

From: Me'Lissa Garrison on behalf of Celine Jimenez Crowson

Date: November 14, 2007

Time:

Total number of pages incl. cover page: 7

For internal purposes only:

Client number: 82062-0102

Attorney billing number: 3087

Confirmation number: (202) 637-5600

The attached information is CONFIDENTIAL and is intended only for the use of the addressee(s) named above. If the reader of this message is not the intended recipient(s) or the employee or agent responsible for delivering the message to the intended recipient(s), please note that any dissemination, distribution or copying of this communication is strictly prohibited. Anyone who receives this communication in error should notify us immediately by telephone and return the original message to us at the above address via the U.S. Mail.

MESSAGE:

As stated in the Decision on Petition issued by Petition Examiner Liana Walsh dated August 10, 2007, please find attached a copy of the Decision on Petition and a copy the Certificate of Correction filed October 5, 2005 and PTO datestamped postcard of October 5, 2005.

We await receipt of the Granted Certificate of Correction.

PAGE 1/7 * RCVD AT 11/14/2007 12:06:12 PM [Eastern Standard Time] * SVR:USPTO-EFXRF-2/13 * DNIS:2732885 * CSID: * DURATION (mm-ss):01-58

UNITED STATES PATENT AND TRADEMARK OFFICE

OIPE IAP74 NOV 14 2007 PATENT & TRADEMARK OFFICE

Commissioner for Patents
United States Patent and Trademark Office
P.O. Box 1450
Alexandria, VA 22313-1450
www.uspto.gov

HOGAN & HARTSON LLP
IP GROUP, COLUMBIA SQUARE
555 THIRTEENTH STREET, N.W.
WASHINGTON DC 20004

HOGAN & HARTSON L.L.P.
AUG 20 2007
IP DOCKETING DEPT.

COPY MAILED
AUG 10 2007
OFFICE OF PETITIONS

In re Patent No. D510,982 :
Application No. 29/198,433 :
Filed: January 30, 2004 : ON PETITION
Issued: October 25, 2005 :
Attorney Docket No. 82062-0102 :

April 11, 2006This is a decision on the petition, filed April 11, 2006, which is being treated as a request under 37 CFR 3.81(b)[1] to correct the assignee's name on the Fee(s) Transmittal form PTOL-85(b) so that the Letters Patent will issue to the assignee. The Office regrets the delay in acting on the instant petition.

The request is **DISMISSED**.

Petitioner states that the correct assignee's name is "Paini SPA Rubinetterie" and that an incorrect assignee's name was included on the Part B - Fee(s) Transmittal form at the time of payment of the issue fee.

37 CFR 3.81(b), effective June 25, 2004, reads:

> *After payment of the issue fee:* Any request for issuance of an application in the name of the assignee submitted after the date of payment of the issue fee, and any request for a patent to be corrected to state the name of the assignee, must state that the assignment was submitted for recordation as set forth in § 3.11 before issuance of the patent, and must include a request for a certificate of correction under § 1.323 of this chapter (accompanied by the fee set forth in § 1.20(a)) and the processing fee set forth in § 1.17(i) of this chapter.

Petitioner states in the instant petition that a Request for a Certificate of Correction was filed October 5, 2005. After a review of the file, the document cannot be located. As petitioner has failed to comply with the provisions of 37 CFR 3.81(b), the request cannot be granted at this time. *See also* MPEP 1481.01.

A review of Office database assignment records reflects that an assignment to "Paini SPA Rubinetterie" has been recorded. Therefore, upon submission of the required certificate of correction and fee, it would be appropriate for the Office to issue a certificate of correction to correct the front page of the Letters Patent to reflect that "Paini SPA Rubinetterie" was the

[1] *See* MPEP 1309, subsection II and Official Gazette of June 22, 2004

assignee of record at the time of issuance of the application into a patent. *Note also* 35 U.S.C. § 152.

In view of the above, **the Certificates of Correction Branch is instructed to issue a certificate of correction upon submission by petitioner of a request for a certificate of correction (and fee) which sets forth "Paini SPA Rubinetterie", as the assignee**. *No certificate of correction will be issued which sets forth an assignee other than the assignee set forth in this request. A copy of this decision* ***must*** *accompany the request for a Certificate of Correction.*

No further renewed request under 37 CFR 3.81(b) is necessary for consideration by the Office of Petitions for issuance of a certificate of correction in the name of the assignee set forth in this request, since this decision operates as an instruction to the Certificates of Correction Branch to issue the requested certificate of correction.

Inquiries concerning this decision should be directed to Petitions Examiner Liana Walsh at (571) 272-3206. Any questions concerning issuance of a certificate of correction should be directed to the Certificates of Correction Branch at (571) 272-4200.

Liana Walsh for
Frances Hicks
Petitions Examiner
Office of Petitions

OIPE IAP74
NOV 14 2007
PATENT & TRADEMARK OFFICE

IN THE UNITED STATES PATENT AND TRADEMARK OFFICE

PLEASE STAMP AND RETURN TO SHOW RECEIPT OF:

Application No. : 29/198,433
Applicant(s) : Marco PAINI
Filed : January 30, 2004
For : TAP
TC/A.U. : 2914
Examiner : Gregory A. Andoll
Docket No. : 82062-0102
Customer No : 24633

Confirmation No.: 5429

OIPE IAP40
OCT 05 2005
PATENT & TRADEMARK OFFICE

ATTN: CERTIFICATE OF CORRECTION BRANCH

1. Request for Certificate of Correction
2. Certificate of Correction
3. Check No. 11930 in the amount of $100.00

Date: October 5, 2005
CJC:KGS:ksh

OIPE IAP74 NOV 14 2007 PATENT & TRADEMARK OFFICE

HOGAN & HARTSON L.L.P. 04-00
PATENT ACCOUNT - DC OFFICE
555 13TH STREET, N.W.
WASHINGTON, DC 20004

BANK OF AMERICA
WASHINGTON, DC 20006
15-120/540

11930

10/4/2005

PAY TO THE ORDER OF Commissioner of Patents and Trademarks $ **100.00

One Hundred Only********** DOLLARS

OVER $1,000 REQUIRES 2 SIGNATURES

MEMO 82062-00102 Certificate of Correction Fee

[redacted]

IN THE UNITED STATES PATENT AND TRADEMARK OFFICE

PLEASE STAMP AND RETURN TO SHOW RECEIPT OF:

Application No. : 29/198,433
Applicant(s) : Marco PAINI
Filed : January 30, 2004
For : TAP
TC/A.U. : 2914
Examiner : Gregory A. Andoll
Docket No. : 82062-0102
Customer No. : 24633

Confirmation No.: 5429

ATTN: CERTIFICATE OF CORRECTION BRANCH

1. Request for Certificate of Correction
2. Certificate of Correction
3. Check No. 11930 in the amount of $100.00

Date: October 5, 2005
CJC:KGS:ksh

OIPE IAP74 NOV 14 2007 PATENT & TRADEMARK OFFICE

IN THE UNITED STATES PATENT AND TRADEMARK OFFICE

Application No.	: 29/198,433	Confirmation No.: 5429
Applicant(s)	: Marco PAINI	
Filed	: January 30, 2004	
For	: TAP	
TC/A.U.	: 2914	
Examiner	: Gregory A. Andoll	
Docket No.	: 82062-0102	
Customer No.	: 24633	

ATTN.: CERTIFICATE OF CORRECTION BRANCH
Commissioner for Patents
P.O. Box 1450
Alexandria, Virginia 22313-1450

REQUEST FOR CERTIFICATE OF CORRECTION

Sir:

Pursuant to the provisions of 37 C.F.R. § 1.322, please enter the attached Certificate of Correction.

The statutory fee of $100.00 is attached.

Respectfully submitted,

HOGAN & HARTSON LLP

Dated: October 5, 2005

By: _____
Celine Jimenez Crowson
Registration No. 40,357

Kevin G. Shaw
Registration No. 43,110

HOGAN & HARTSON LLP
555 13th Street, N.W.
Washington, D.C. 20004
Telephone: 202-637-5600
Facsimile: 202-637-5910
e-mail: cjcrowson@hhlaw.com
Customer No. 24633

UNITED STATES PATENT AND TRADEMARK OFFICE
CERTIFICATE OF CORRECTION

APPLICATION NO.: 29/198,433
DATED: January 30, 2004
INVENTOR(S): Marco PAINI

In SECTION 73:

Please change the Assignee's name to read as follows:

PAINI SPA RUBINETTERIE

Attorney Docket No. 82062-0102

MAILING ADDRESS OF SENDER:

APPLICATION NO. 29/198,433
No. of add'l copies
@ 30¢ per page

0

HOGAN & HARTSON, LLP
555 Thirteenth Street, N.W.
Washington, D.C. 20004

FORM PTO 1050 (REV. 3-82)

UNITED STATES PATENT AND TRADEMARK OFFICE

Commissioner for Patents
United States Patent and Trademark Office
P.O. Box 1450
Alexandria, VA 22313-1450
www.uspto.gov

HOGAN & HARTSON LLP
IP GROUP, COLUMBIA SQUARE
555 THIRTEENTH STREET, N.W.
WASHINGTON, DC 20004

COPY MAILED
SEP 25 2006
OFFICE OF PETITIONS

In re Patent No. D512483 :

Issue Date: December 6, 2005 :

Application No. 29/198,438 : ON PETITION

Filed: January 30, 2004 :

Attorney Docket No. **82062-00105**

This is a decision on the petition filed April 11, 2006, which is being treated as a request under 37 CFR 3.81(b)[1] to correct the assignee data on the front page of the above-identified patent by way of a Certificate of Correction.

The request is **dismissed**.

A completed "Certificate of Correction" expressly specifying the desired correction did not accompany the request. Petitioner should complete the form PTO/SB/44, which is enclosed, and return it with any renewed request filed. Petitioner must also remit the certificate of correction of $100.00.

The renewed request may directed to the following:

By mail: Mail Stop Petitions
Commissioner for Patents
P.O. Box 1450
Alexandria, VA 22313-1450

By FAX: (571) 273-8300
Attn: Office of Petitions

Questions regarding this decision may be directed to the undersigned at (571)272-3222.

Kenya A. McLaughlin
Petitions Attorney
Office of Petitions

Enclosure: Form PTO/SB/44

[1] See *Official Gazette* of June 22, 2004.

UNITED STATES PATENT AND TRADEMARK OFFICE

Commissioner for Patents
United States Patent and Trademark Office
P.O. Box 1450
Alexandria, VA 22313-1450
www.uspto.gov

HOGAN & HARTSON LLP
IP GROUP, COLUMBIA SQUARE
555 THIRTEENTH STREET, N.W.
WASHINGTON, DC 20004

COPY MAILED

NOV 06 2006

OFFICE OF PETITIONS

In re Patent No. D512483

Issue Date: December 6, 2005

Application No. 29/198,438

Filed: January 30, 2004

Attorney Docket No. 82062-00105

ON PETITION

This is a decision on the petition filed April 11, 2006, which is being treated as a request under 37 CFR 3.81(b)[1] to correct the assignee on the front page of the above-identified patent by way of a Certificate of Correction.

The decision mailed September 25, 2006, is vacated.

The request is **granted**.

The Certificate of Correction filed, October 5, 2005, is noted.

Telephone inquiries concerning this matter may be directed to the undersigned at (571) 272-3222. Any questions concerning the issuance of the Certificate of Correction should be directed to the Certificate of Correction Branch at (703) 305-8309.

The file is being forwarded to the Certificate of Correction Branch for issuance of the requested Certificate of Correction.

Kenya A. McLaughlin
Petitions Attorney
Office of Petitions

[1] See *Official Gazette* of June 22, 2004.

UNITED STATES PATENT AND TRADEMARK OFFICE

JAN 31 2005

COMMISSIONER FOR PATENTS
UNITED STATES PATENT AND TRADEMARK OFFICE
P.O. BOX 1450
ALEXANDRIA, VA 22313-1450
www.uspto.gov

SAND & SEBOLT
AEGIS TOWER, SUITE 1100
4940 MUNSON STREET, NW
CANTON OH 44718-3615

In re Application of
Robert S. Morrison
Serial No.: 29/ 198,458
Filed: January 28, 2004
Attorney Docket No.: 1579031US1BD

: PETITION DECISION

This is a decision on applicant's Petition to Accept Delayed Payment of Issue Fee, which is being treated as a Petition under 37 CFR 1.137(b) received November 15, 2004, to revive an unintentionally abandoned application.

This application became abandoned for failure to respond to the Notice of Allowance mailed July 20, 2004, which set a three-month statutory period to pay the Issue fee. As no response was submitted by October 20, 2004, the application was abandoned; this petition followed.

A grantable petition under 37 CFR 1.137(b), as revised December 1, 1997, requires four items: (1) a petition and petition fee; (2) a complete response if not earlier made; (3) a statement that the entire period of delay in prosecution was unintentional; and (4) a terminal disclaimer and disclaimer fee.

The statement that the delay in payment of the issue fee was unintentional will be accepted. It is construed as meaning that "the entire delay in filing the required reply from the due date for the reply until the filing of a grantable petition pursuant to 37 CFR 1.137(b) was unintentional." If this is an incorrect statement in view of the new rules, petitioner is required to provide a statement to that effect. Furthermore, because the Petition was filed before the mailing of the Notice of Abandonment, the requirement for a terminal disclaimer and fee has been waived.

Applicant's petition is **GRANTED.**

The application will be forwarded to Publications Branch to be issued into a Patent in due course.

Should there be any questions with respect to this decision, please contact Sandra Morris; by mail addressed to: Director, Technology Center 1700/2900, P.O. Box 1450, Alexandria, VA 22313-1450; or by telephone at (571) 272-2622.

Jacqueline Stone
Director, Technology Center 1700/2900

UNITED STATES PATENT AND TRADEMARK OFFICE

Commissioner for Patents
United States Patent and Trademark Office
P.O. Box 1450
Alexandria, VA 22313-1450
www.uspto.gov

JUN 07 2004

BANNER & WITCOFF
1001 G STREET N W
SUITE 1100
WASHINGTON DC 20001

In re Application of	:	
Peter A. Hudson	:	
Serial No.: 29/198,461	:	DECISION ON PETITION
Filed: January 30, 2004	:	
For: Portion Of A Shoe Upper	:	

This is in response to the petition applicant filed on February 26, 2004 to make the above-identified application special under the provisions of 37 CFR 1.102(d).

Applicant has satisfied the provisions set forth in M.P.E.P. 708.02, VIII, thus the petition is **GRANTED**.

The application will be forwarded to the examiner for action on the merits commensurate with this decision.

Should there be any questions with regard to this letter please contact John Kittle by letter addressed to the Director, Technology Center 3700/2900, P.O. Box 1450 Alexandria, VA 22313-1450, or by telephone at (703) 308-0873 or by facsimile transmission at (703) 308-3139.

John E. Kittle
Director
Technology Center 3700/2900

UNITED STATES PATENT AND TRADEMARK OFFICE

Commissioner for Patents
United States Patent and Trademark Office
P.O. Box 1450
Alexandria, VA 22313-1450
www.uspto.gov

JUN 07 2004

BANNER & WITCOFF
1001 G STREET N W
SUITE 1100
WASHINGTON DC 20001

In re Application of	:	
Peter A. Hudson	:	
Serial No.: 29/198,462	:	DECISION ON PETITION
Filed: January 30, 2004	:	
For: Portion Of A Shoe Upper	:	

This is in response to the petition applicant filed on February 17, 2004 to make the above-identified application special under the provisions of 37 CFR 1.102(d).

Applicant has satisfied the provisions set forth in M.P.E.P. 708.02, VIII, thus the petition is **GRANTED**.

The application will be forwarded to the examiner for action on the merits commensurate with this decision.

Should there be any questions with regard to this letter please contact John Kittle by letter addressed to the Director, Technology Center 3700/2900, P.O. Box 1450 Alexandria, VA 22313-1450, or by telephone at (703) 308-0873 or by facsimile transmission at (703) 308-3139.

John E. Kittle
Director
Technology Center 3700/2900

UNITED STATES PATENT AND TRADEMARK OFFICE

Commissioner for Patents
United States Patent and Trademark Office
P.O. Box 1450
Alexandria, VA 22313-1450
www.uspto.gov

WILLIAM J SAPONE
COLEMAN SUDOL SAPONE P.C.
714 COLORADO AVENUE
BRIDGEPORT, CT 06605

6/24/05

In re Application of
Wai Hong Chan
Serial No.: 29/198,482
Filed: January 30, 2004
Attorney Docket No.: 650/9-1901

: PETITION DECISION

This is a decision on applicant's petition to revive patent application under 37 CFR 1.137(b), filed May 18, 2005, to revive an unintentionally abandoned application.

This application became abandoned for failure to respond to the Notice of Allowance mailed January 25, 2005, which set a three-month statutory period to submit the Issue Fee. As no response was received by April 25, 2005, the application was abandoned; applicant then filed this petition.

A grantable petition for a design application under 37 CFR 1.137(b), as revised December 1, 1997, requires four items: (1) a petition and petition fee; (2) a complete response if not earlier made; (3) a statement that the entire period of delay in prosecution was unintentional; and (4) a terminal disclaimer and disclaimer fee. The requirement for a terminal disclaimer has been waived, as the petition was filed before the mailing of the Notice of Abandonment.

Applicant's petition is **GRANTED**.

The application will be forwarded to Publication Division for printing as a patent in due course.

The terminal disclaimer fee of $65.00 will be refunded to applicant's Deposit account 04-0838, as directed.

Should there be any questions with respect to this decision, please contact Sandra Morris; by mail addressed to: Director, Technology Center 1700/2900, P.O. Box 1450, Alexandria, VA 22313-1450; or by telephone at (571) 272-2622.

Jacqueline M. Stone

Jacqueline Stone
Director, Technology Center 1700/2900

PTO/SB/63 (09-04)
Approved for use through 07/31/2006. OMB 0651-0031
U.S. Patent and Trademark Office; U.S. DEPARTMENT OF COMMERCE
Under the Paperwork Reduction Act of 1995, no persons are required to a collection of information unless it displays a valid OMB control number.

TERMINAL DISCLAIMER TO ACCOMPANY PETITION

Docket Number (Optional)
650/9-1801

In re Application of:

Name: Wai Hong CHAN

Application Number: 29/198,482

Filed: January 30, 2004

For: CLIP-ON READING LIGHT

RECEIVED
CENTRAL FAX CENTER
MAY 1 8 2005

The owner*, Sunrich Manufactory Ltd. of 100 percent interest in the above-identified application hereby disclaims a terminal part of the term of any patent granted the above-identified application equivalent to: (1) if the above-identified application is a design application, the period of abandonment of the above-identified application, and (2) if the above-identified application is a utility or plant application, the lesser of: (a) the period of abandonment of the application; or (b) the period extending beyond twenty years from the date on which the above-identified application was filed in the United States or, if the application contains a specific reference to an earlier filed application(s) under 35 U.S.C. 120, 121, or 365(c), from the date on which the earliest such application was filed. This disclaimer also applies to any patent granted on a utility or plant application filed before June 8, 1995, or a design application, that contains a specific reference under 35 U.S.C. 120, 121, or 365(c) to the above-identified application. This disclaimer is binding upon the grantee, and its successors or assigns.

Check either box 1 or 2 below, if appropriate.

1. ☐ For submissions on behalf of an organization (e.g., corporation, partnership, university, government agency, etc.), the undersigned is empowered to act on behalf of the organization.
2. ☑ The undersigned is an attorney or agent of record. Registration Number 32518.

Signature — Date: 5/18/05

Typed or Printed Name: William J. Sapone — Telephone Number: 203-366-3560

☑ Terminal disclaimer fee under 37 CFR 1.20(d) included.

WARNING: Information on this form may become public. Credit card information should not be included on this form. Provide credit card information and authorization on PTO-2038.

* Statement under 37 CFR 3.73(b) is required if terminal disclaimer is signed by the assignee (owner). Form PTO/SB/96 may be used for making this certification. See MPEP § 324.

This collection of information is required by 37 CFR 1.137. The information is required to obtain or retain a benefit by the public which is to file (and by the USPTO to process) an application. Confidentiality is governed by 35 U.S.C. 122 and 37 CFR 1.11 and 1.14. This collection is estimated to take 12 minutes to complete, including gathering, preparing, and submitting the completed application form to the USPTO. Time will vary depending upon the individual case. Any comments on the amount of time you require to complete this form and/or suggestions for reducing this burden, should be sent to the Chief Information Officer, U.S. Patent and Trademark Office, U.S. Department of Commerce, P.O. Box 1450, Alexandria, VA 22313-1450. DO NOT SEND FEES OR COMPLETED FORMS TO THIS ADDRESS. SEND TO: Commissioner for Patents, P.O. Box 1450, Alexandria, VA 22313-1450.

If you need assistance in completing the form, call 1-800-PTO-9199 and select option 2.

05/20/2005 EFLORES 00000094 040838 29198482
01 FC:2814 65.00 DA

UNITED STATES PATENT AND TRADEMARK OFFICE

COMMISSIONER FOR PATENTS
UNITED STATES PATENT AND TRADEMARK OFFICE
P.O. BOX 1450
ALEXANDRIA, VA 22313-1450
www.uspto.gov

APR 08 2004

SALTER & MICHAELSON
321 SOUTH MAIN STREET
PROVIDENCE, RI 02903-7128

In re Application of Vito A. Scola Serial No.: 29/198,528 Filed: January 31, 2004 For: Shopping Bag Carrier	: : : : :	DECISION ON PETITION

This is in response to the petition applicant filed on January 31, 2004 to make the above-identified application special under the provisions of 37 CFR 1.102(d).

Applicant has satisfied the provisions set forth in M.P.E.P. 708.02, VIII, thus the petition is **GRANTED**.

The application will be forwarded to the examiner for action on the merits commensurate with this decision.

Should there be any questions with regard to this letter please contact John Kittle by letter addressed to the Director, Technology Center 3700/2900, P.O. Box 1450 Alexandria, VA 22313-1450, or by telephone at (703) 308-0873 or by facsimile transmission at (703) 308-3139.

John E. Kittle
Director
Technology Center 3700/2900

UNITED STATES PATENT AND TRADEMARK OFFICE

Commissioner for Patents
United States Patent and Trademark Office
P.O. Box 1450
Alexandria, VA 22313-1450
www.uspto.gov

THE BLACK & DECKER CORPORATION
701 EAST JOPPA ROAD, TW199
TOWSON MD 21286

COPY MAILED

OCT 11 2006

OFFICE OF PETITIONS

In re Application of	:	
Etter et al.	:	
Application No. 29/198,534	:	ON PETITION
Filed: January 29, 2004	:	
Attorney Docket No. JK01461A	:	

This is a decision on the petition under 37 C.F.R. § 1.137(b), filed March 27, 2006, to revive the above-identified application.

The petition is **GRANTED.**

The petition satisfies the conditions for revival pursuant to the provisions of 37 CFR 1.137(b) in that (1) the reply in the form of an amendment; (2) the petition fee; (3) the required statement of unintentional delay have been received; and (4) a terminal disclaimer. Accordingly, the response has been accepted as having been unintentionally delayed.

This matter is being referred to Technology Center 2900 for further examination on the merits.

Telephone inquiries regarding this decision should be directed to the undersigned at (571) 272-3206.

Liana Chase Walsh
Petitions Examiner
Office of Petitions

UNITED STATES PATENT AND TRADEMARK OFFICE

Commissioner for Patents
United States Patent and Trademark Office
P.O. Box 1450
Alexandria, VA 22313-1450
www.uspto.gov

COPY MAILED

DEC 16 2004

OFFICE OF PETITIONS

MYERS BIGEL SIBLEY & SAJOVEC
P.O. BOX 37428
RALEIGH, NC 27627

In re Application of	:
Michael A. Rosado	:DECISION GRANTING FILING
Application No. 29/198,545	:DATE OF January 30, 2004
Filed: January 30, 2004	:
Attorney Docket No. 9008-48DS	:

This is a decision on the petition filed April 20, 2004, requesting that the above-identified application be accorded a filing date of January 30, 2004 rather than the presently accorded date of February 2, 2004.

Petitioner requests the earlier filing date on the basis that the application was purportedly deposited with the U.S. Postal Service (USPS) as Express Mail on January 30, 2004, pursuant to 37 CFR 1.10. In support, petitioner has submitted a copy of Express Mail label No. EV 353592997 US showing a stamped date of January 30, 2004. The same Express Mail receipt number appears on the original "Utility Patent Application Transmittal."

In view of the USPS receipt stamp of January 30, 2004, appearing on the same Express Mail label number as shown on the transmittal for the instant application. Petitioner also provided a copy of the USPS Track and Confirmation receipt which shows an acceptance date of January 30, 2004. It is concluded that the application was deposited as "Express Mail" with the USPS on January 30, 2004.

The petition is **granted**.

Telephone inquiries specific to this decision on petition should be directed to Karen Creasy at (571)272-3208.

This application is being referred to the Office of Initial Patent Examination for processing with a filing date of January 30, 2004, and for mailing of a corrected filing receipt.

Brian Hearn
for Senior Petitions Examiner
Office of Petitions
Office of the Deputy Commissioner
for Patent Examination Policy

UNITED STATES PATENT AND TRADEMARK OFFICE

Commissioner for Patents
United States Patent and Trademark Office
P.O. Box 1450
Alexandria, VA 22313-1450
www.uspto.gov

HOGAN & HARTSON LLP
IP GROUP, COLUMBIA SQUARE
555 THIRTEENTH STREET, N.W.
WASHINGTON, DC 20004

COPY MAILED

SEP 15 2006

OFFICE OF PETITIONS

In re Patent No. D512484

Issue Date: December 6, 2005

Application No. 29/198,556

Filed: January 30, 2004

Attorney Docket No. 82062-00103

ON PETITION

This is a decision on the petition filed April 11, 2006, which is being treated as a request under 37 CFR 3.81(b)[1] to correct the assignee on the front page of the above-identified patent by way of Certificate of Correction.

The request is **granted**.

Telephone inquiries concerning this matter may be directed to the undersigned at (571) 272-3222. Any questions concerning the issuance of the Certificate of Correction should be directed to the Certificate of Correction Branch at (703) 305-8309.

The file is being forwarded to the Certificate of Correction Branch for issuance of the requested Certificate of Correction.

Kenya A. McLaughlin
Petitions Attorney
Office of Petitions

[1] See *Official Gazette* of June 22, 2004.

UNITED STATES PATENT AND TRADEMARK OFFICE

UNITED STATES DEPARTMENT OF COMMERCE
United States Patent and Trademark Office
Address: COMMISSIONER FOR PATENTS
P.O. Box 1450
Alexandria, Virginia 22313-1450
www.uspto.gov

APPL NO.	FILING OR 371 (c) DATE	ART UNIT	FIL FEE REC'D	ATTY.DOCKET NO	DRAWINGS	TOT CLMS	IND CLMS
29/198,586	01/30/2004	2912	170	PA2641US	3	1	1

CONFIRMATION NO. 7437

CORRECTED FILING RECEIPT

OC000000013533012

22830
CARR & FERRELL LLP
2200 GENG ROAD
PALO ALTO, CA 94303

Date Mailed: 08/13/2004

Receipt is acknowledged of this regular Patent Application. It will be considered in its order and you will be notified as to the results of the examination. Be sure to provide the U.S. APPLICATION NUMBER, FILING DATE, NAME OF APPLICANT, and TITLE OF INVENTION when inquiring about this application. Fees transmitted by check or draft are subject to collection. Please verify the accuracy of the data presented on this receipt. **If an error is noted on this Filing Receipt, please write to the Office of Initial Patent Examination's Filing Receipt Corrections, facsimile number 703-746-9195. Please provide a copy of this Filing Receipt with the changes noted thereon. If you received a "Notice to File Missing Parts" for this application, please submit any corrections to this Filing Receipt with your reply to the Notice. When the USPTO processes the reply to the Notice, the USPTO will generate another Filing Receipt incorporating the requested corrections (if appropriate).**

Applicant(s)

Holly Andrews-Kramer, Menlo Park, CA;

Domestic Priority data as claimed by applicant

Foreign Applications

If Required, Foreign Filing License Granted: 04/02/2004

Projected Publication Date: None, application is not eligible for pre-grant publication

Non-Publication Request: No

Early Publication Request: No

**** SMALL ENTITY ****

Title

Shoe midsole

Preliminary Class

D02

LICENSE FOR FOREIGN FILING UNDER
Title 35, United States Code, Section 184
Title 37, Code of Federal Regulations, 5.11 & 5.15

GRANTED

The applicant has been granted a license under 35 U.S.C. 184, if the phrase "IF REQUIRED, FOREIGN FILING LICENSE GRANTED" followed by a date appears on this form. Such licenses are issued in all applications where the conditions for issuance of a license have been met, regardless of whether or not a license may be required as set forth in 37 CFR 5.15. The scope and limitations of this license are set forth in 37 CFR 5.15(a) unless an earlier license has been issued under 37 CFR 5.15(b). The license is subject to revocation upon written notification. The date indicated is the effective date of the license, unless an earlier license of similar scope has been granted under 37 CFR 5.13 or 5.14.

This license is to be retained by the licensee and may be used at any time on or after the effective date thereof unless it is revoked. This license is automatically transferred to any related applications(s) filed under 37 CFR 1.53(d). This license is not retroactive.

The grant of a license does not in any way lessen the responsibility of a licensee for the security of the subject matter as imposed by any Government contract or the provisions of existing laws relating to espionage and the national security or the export of technical data. Licensees should apprise themselves of current regulations especially with respect to certain countries, of other agencies, particularly the Office of Defense Trade Controls, Department of State (with respect to Arms, Munitions and Implements of War (22 CFR 121-128)); the Office of Export Administration, Department of Commerce (15 CFR 370.10 (j)); the Office of Foreign Assets Control, Department of Treasury (31 CFR Parts 500+) and the Department of Energy.

NOT GRANTED

No license under 35 U.S.C. 184 has been granted at this time, if the phrase "IF REQUIRED, FOREIGN FILING LICENSE GRANTED" DOES NOT appear on this form. Applicant may still petition for a license under 37 CFR 5.12, if a license is desired before the expiration of 6 months from the filing date of the application. If 6 months has lapsed from the filing date of this application and the licensee has not received any indication of a secrecy order under 35 U.S.C. 181, the licensee may foreign file the application pursuant to 37 CFR 5.15(b).

UNITED STATES PATENT AND TRADEMARK OFFICE

COMMISSIONER FOR PATENTS
UNITED STATES PATENT AND TRADEMARK OFFICE
P.O. BOX 1450
ALEXANDRIA, VA 22313-1450
www.uspto.gov
DIW Oct-06

HOGAN & HARTSON LLP
IP GROUP, COLUMBIA SQUARE
555 THIRTEENTH STREET, N.W.
WASHINGTON DC 20004

COPY MAILED
OCT 1 1 2006
OFFICE OF PETITIONS

In re Patent No. D513,308	:	
Issued: 27 December, 2005	:	
Application No. 29/198,613	:	ON PETITION
Filed: 30 January, 2004	:	
Atty Docket No. 82062-00104	:	

This is a decision on the petition filed on 7 July, 2006 (postcard date 11 April, 2006), which is being treated as a renewed request under 37 CFR 3.81(b)[1] to correct the assignee on the front page of the above-identified patent by way of a Certificate of Correction.

The petition is **granted**.

Telephone inquires concerning this matter may be directed to the undersigned at 571.272.3231. Any questions concerning the issuance of the Certificate of Correction should be directed to the Certificates of Correction Branch at 703.305.8309.

The file is being forwarded to the Certificates of Correction Branch for issuance of the requested Certificate of Correction.

D Wood
Douglas I. Wood
Senior Petitions Attorney
Office of Petitions

[1] See Official Gazette of 22 June, 2004.

SPE RESPONSE FOR CERTIFICATE OF CORRECTION

Paper No.:

DATE : August 16, 2007

TO SPE OF : ART UNIT 2916

SUBJECT : Request for Certificate of Correction on Patent No.: D513308

A response is requested with respect to the accompanying request for a certificate of correction.

Please complete this form and return with file, within **7** days to:
Certificates of Correction Branch - ST (South Tower) 9A22
Palm location **7590** - Tel. No. (703) 305-8309

With respect to the change(s) requested, correcting Office and/or Applicant's errors, should the patent read as shown in the certificate of correction? No new matter should be introduced, nor should the scope or meaning of the claims be changed.

Thank You For Your Assistance **Certificates of Correction Branch**

The request for issuing the above-identified correction(s) is hereby:

Note your decision on the appropriated box.

☒ **Approved** All changes apply.

☐ **Approved in Part** Specify below which changes **do not** apply.

☐ **Denied** State the reasons for denial below.

Comments:

See petition decision 10/11/2006

IAN SIMMONS
SUPERVISORY PATENT EXAMINER

SPE: Art Unit 2916

DO NOT SCAN! **Please forward case and paper to address shown below.**

SPE RESPONSE FOR CERTIFICATE OF CORRECTION

Paper No.: _____

DATE : 5-31-06

TO SPE OF : ART UNIT 2912

SUBJECT : Request for Certificate of Correction for Appl. No.: 29/198622 Patent No.: D515306 S

Please respond to this request for a certificate of correction within 7 days.

Please review the requested changes/corrections as shown in the attached certificate of correction. Please complete this form (see below) and forward it with the file to:

Certificates of Correction Branch (CofC)
South Tower - 9A22
Palm Location 7580

E. Jones
Certificates of Correction Branch
703-308-9390 ext. _____

Are these the correct drawings? Thanks

Thank You For Your Assistance

The request for issuing the above-identified correction(s) is hereby:

Note your decision on the appropriate box.

- ☑ **Approved** — All changes apply.
- ☐ **Approved in Part** — Specify below which changes **do not** apply.
- ☐ **Denied** — State the reasons for denial below.

Comments: _____

STELLA REID
SUPERVISORY DESIGN EXAMINER

SPE

2912
Art Unit

2913

UNITED STATES PATENT AND TRADEMARK OFFICE

Commissioner for Patents
United States Patent and Trademark Office
P.O. Box 1450
Alexandria, VA 22313-1450
www.uspto.gov

Dorsey & Whitney LLP
Intellectual Property Department
801 Grand, Suite 3900
Des Moines, IA 50309

COPY MAILED

NOV 16 2004

OFFICE OF PETITIONS

In re Application of	:	DECISION ACCORDING STATUS
Huffer et al.	:	UNDER 37 CFR 1.47(a)
Application No. 29/198,631	:	
Filed: January 30, 2004	:	
Attorney Docket No. 448320	:	

This is in response to the petition under 37 CFR 1.47(a), filed September 10, 2004 (certificate of mailing September 7, 2004). Petitioner obtained a three-month extension of time to reply. Therefore, the petition is filed timely.

The petition is granted.

Petitioner has shown that Samuel J. Marino, the non-signing inventor, has refused to join in the filing of the above-identified application after having been presented with the application papers. Specifically, the statement of facts of Keith Gausmann establishes that the inventor was presented with the application papers, including the specification, claims and drawings, but refused the request that he sign the declaration.

The above-identified application and papers have been reviewed and found in compliance with 37 CFR 1.47(a). This application is hereby accorded Rule 1.47(a) status. As provided in Rule 1.47(c), this Office will forward notice of this application's filing to the non-signing inventor at the address given in the present petition. Notice of the filing of this application will also be published in the Official Gazette.

The application is being referred to Technology Center Art Unit 2913 for examination in due course.

Telephone inquiries regarding this decision should be directed to the undersigned at (703) 306-5589.

Christina Tartera Donnell

Christina Tartera Donnell
Senior Petitions Attorney
Office of Petitions

SPE RESPONSE FOR CERTIFICATE OF CORRECTION

Paper No.: ——

DATE : 2/2/09

TO SPE OF : ART UNIT 2914

SUBJECT : Request for Certificate of Correction for Appl. No.: 29/198709 Patent No.: D566645S

D566,645

Please respond to this request for a certificate of correction within 7 days.

FOR IFW FILES:

Please review the requested changes/corrections as shown in the **COCIN** document(s) in the IFW application image. No new matter should be introduced, nor should the scope or meaning of the claims be changed.

Please complete the response (see below) and forward the completed response to scanning using document code **COCX**.

FOR PAPER FILES:

Please review the requested changes/corrections as shown in the attached certificate of correction. Please complete this form (see below) and forward it with the file to:

Certificates of Correction Branch (CofC)
South Tower - 9A22
Palm Location 7580

Virginia Tolbert
Certificates of Correction Branch
703-308-9390 ext. 113

Thank You For Your Assistance

The request for issuing the above-identified correction(s) is hereby:
Note your decision on the appropriate box.

- ☒ **Approved** — All changes apply.
- ☐ **Approved in Part** — Specify below which changes **do not** apply.
- ☐ **Denied** — State the reasons for denial below.

Comments: _____

SPE

2914
Art Unit

UNITED STATES PATENT AND TRADEMARK OFFICE

Commissioner for Patents
United States Patent and Trademark Office
P.O. Box 1450
Alexandria, VA 22313-1450
www.uspto.gov

John L. Doughty
ARRIS International, Inc.
3871 Lakefield Drive
Suwanee, GA 30024

COPY MAILED

SEP 2 8 2005

OFFICE OF PETITIONS

In re Application of

Hales, et al.

Application No. 29/198,744

Filed: February 4, 2004

Attorney Docket No. 0960-028

DECISION ON PETITION

This is a decision on the petition under 37 CFR §1.137(b), August 29, 2005, to revive the above-identified application.

The petition is **dismissed**.

Any request for reconsideration of this decision must be submitted within TWO (2) MONTHS from the mail date of this decision. Extensions of time under 37 CFR 1.136(a) are permitted. The reconsideration request should include a cover letter entitled "Renewed Petition" under 37 CFR 1.137(b)."

This application became abandoned for failure to respond in a timely manner to the Notice of Allowance and Issue Fee Due and Notice of Allowability, both mailed March 31, 2005. The notices allowed statutory periods for reply of three months from their mailing dates. No reply was received within the allowable period, and the application became abandoned on July1, 2005. A Notice of Abandonment was mailed on August 5, 3005.

Effective December 1, 1997, the provisions of 37 CFR 1.137(b) now provide that where the delay in reply was unintentional, a petition may be filed to revive an abandoned application or a lapsed patent pursuant to 37 CFR 1.137(b). A grantable petition pursuant to 37 CFR 1.137(b) must be accompanied by:

(1) the required reply, unless previously filed. In a non-provisional application abandoned for failure to prosecute, the required reply may be met by the filing of a continuing application. In an application or patent, abandoned or lapsed for failure to pay the issue fee, or any portion thereof, the required reply must be the payment of the issue fee or any outstanding balance thereof.

(2) the petition fee as set forth in 37 CFR 1.17(m);

(3) a statement that the entire delay in filing the required reply from the due date for the reply until the filing of a grantable petition pursuant to 37 CFR 1.137(b) was unintentional. The Commissioner may require additional information where there is a question whether the delay was unintentional; and

(4) any terminal disclaimer (and fee set forth in 37 CFR 1.20(d)) required pursuant to 37 CFR 1.137(d).

The instant renewed petition does not satisfy the requirements of item (1) and (4) above.

As to item (1), corrected drawings, as required by the Notice of Allowability, were not found with petition papers. Any renewed petition filed must be accompanied by corrected drawings satisfying the requirements set forth in the Notice of Allowability.

As to item (4), the terminal disclaimer was not found with the petition papers. Any renewed petition filed must be accompanied by the completed terminal disclaimer form, which is enclosed for petitioner's convenience. Pursuant to 37 CFR 1.137(d), the terminal disclaimer must dedicate to the public a terminal part of the term of any patent granted from this application that is equivalent to the period of abandonment of the application.

There is no indication that the person signing the instant petition was ever given a power of attorney or authorization of agent to prosecute the above-identified application. If the person signing the instant petition wishes to take further action in this case, the appropriate power of attorney or authorization of agent must be submitted.

Further correspondence with respect to this matter should be addressed as follows:

By mail: Mail Stop Petitions
Commissioner for Patents
United States Patent and Trademark Office
Box 1450
Alexandria, VA 22313-1450

By facsimile: (571) 273-8300

Telephone inquiries concerning this matter may be directed to the undersigned at (571) 272-3222.

Kenya A. McLaughlin

Kenya A. McLaughlin
Petitions Attorney
Office of Petitions

Enclosure: "Terminal Disclaimer to Accompany Petition"

UNITED STATES PATENT AND TRADEMARK OFFICE

Commissioner for Patents
United States Patent and Trademark Office
P.O. Box 1450
Alexandria, VA 22313-1450
www.uspto.gov

John L. Doughty
ARRIS International, Inc.
3871 Lakefield Drive
Suwanee, GA 30024

COPY MAILED

JAN 23 2006

OFFICE OF PETITIONS

In re Application of

Hales, et al.

Application No. 29/198,744

Filed: February 4, 2004

Attorney Docket No. 0960-028

DECISION ON PETITION

This is a decision on the renewed petition under 37 CFR 1.137(b), filed January 3, 2006, to revive the above-identified application.

The renewed petition is **granted**.

This application became abandoned for failure to respond in a timely manner to the Notice of Allowance and Issue Fee Due and Notice of Allowability, both mailed March 31, 2005. The notices allowed statutory periods for reply of three months from their mailing dates. No reply was received within the allowable period, and the application became abandoned on July1, 2005. A Notice of Abandonment was mailed on August 5, 3005. A petition under 37 CFR 1.137(b) was filed on August 29, 2005, and dismissed by a decision mailed September 28, 2005. The instant renewed petition was filed on January 3, 2006, along with a request for an extension of time within the second month.

The terminal disclaimer filed January 3, 2006, is noted.

The drawings filed January 3, 2006, are also noted.

The application is being forwarded to the Office of Patent Publications for further processing.

Telephone inquiries concerning this matter may be directed to the undersigned at (571) 272-3222.

Kenya A. McLaughlin
Petitions Attorney
Office of Petitions

UNITED STATES PATENT AND TRADEMARK OFFICE

Commissioner for Patents
United States Patent and Trademark Office
P.O. Box 1450
Alexandria, VA 22313-1450
www.uspto.gov

NORRIS MCLAUGHLIN & MARCUS
875 THIRD AVENUE, 18TH FLOOR
NEW YORK, NY 10022

COPY MAILED

MAR 21 2006

OFFICE OF PETITIONS

In re Patent No. D505,624	:	
Issue Date: May 31, 2005	:	
Application No. 29/198,771	:	ON PETITION
Filed: February 3, 2004	:	
Attorney Docket No. 102792-245	:	

This is a decision on the petition under 37 CFR 1.183, filed December 9, 2005, which is being treated under 37 CFR 3.81(b), to correct the name of the assignee on the front page of the above-identified patent by way of a Certificate of Correction.

The petition is **GRANTED**.

The patent file is being forwarded to the Certificates of Correction Branch for issuance of the requested Certificate of Correction.

Telephone inquiries concerning this decision may be directed to the undersigned at (571) 272-3220. Inquiries regarding the issuance of a certificate of correction should be directed to the Certificate of Correction Branch at (703) 305-8309.

Wan Laymon
Petitions Examiner
Office of Petitions

UNITED STATES PATENT AND TRADEMARK OFFICE

Commissioner for Patents
United States Patent and Trademark Office
P.O. Box 1450
Alexandria, VA 22313-1450
www.uspto.gov

Attn: David W. Osborne
THORPE NORTH & WESTERN, LLP
P.O. Box 1219
Sandy UT 84091-1219

COPY MAILED

JAN 0 3 2007

OFFICE OF PETITIONS

In re Application of :
Darren :
Application No. 29/198,802 : ON PETITION
Filed: February 3, 2004 :
Attorney Docket No. 20682.DES :
For: POUCH WITH CLOTH

This is a decision on the petition under 37 CFR 1.137(b), filed November 7, 2006 (certificate of mailing date November 2, 2006), to revive the above-identified application.

This application became abandoned for failure to timely submit corrected formal drawings within three (3) months of the mail date of the Notice of Allowability, mailed on December 6, 2005. Accordingly, this application became abandoned on March 7, 2006. A Notice of Abandonment was mailed on September 29, 2006.

Applicant has submitted a proper reply in the form of corrected formal drawings, an acceptable statement of the unintentional nature of the delay in responding to the December 6, 2005 Notice of Allowance and Fee(s) Due, a terminal disclaimer and required fee, and the petition fee.

The petition is **granted**.

This application is being forwarded to Publishing Division for consideration of the drawings filed on November 7, 2006 (certificate of mailing date November 2, 2006).

Telephone inquiries concerning this matter may be directed to the undersigned at (571) 272-3230.

Shirene Willis Brantley

Shirene Willis Brantley
Senior Petitions Attorney
Office of Petitions

UNITED STATES PATENT AND TRADEMARK OFFICE

COMMISSIONER FOR PATENTS
UNITED STATES PATENT AND TRADEMARK OFFICE
P.O. BOX 1450
ALEXANDRIA, VA 22313-1450
www.uspto.gov

KLARQUIST SPARKMAN, LLP
121 SW SALMON STREET
SUITE 1600
PORTLAND, OR 97204

APR 18 2005

In re Application of
Steven F. Rafoth
Serial No.: 29/198,831
Filed: February 4, 2004
Attorney Docket No.: 5105-67826-01

: PETITION DECISION

This is a decision on applicant's petition to revive patent application under 37 CFR 1.137(b), submitted February 15, 2005, to revive an unintentionally abandoned application.

This application became abandoned for failure to respond to the Notice of Allowance mailed November 12, 2004, which set a three-month statutory period to submit the Issue Fee. As no response was received by February 14, 2004, the application was abandoned. Applicant then filed this petition.

A grantable petition for a design application under 37 CFR 1.137(b), as revised December 1, 1997, requires four items: (1) a petition and petition fee; (2) a complete response if not earlier made; (3) a statement that the entire period of delay in prosecution was unintentional; and (4) a terminal disclaimer and disclaimer fee. The requirement for a terminal disclaimer has been waived, as the petition was filed before the mailing of the Notice of Abandonment.

Applicant's petition is **GRANTED**.

The application will be forwarded to Publication Division for printing as a patent in due course.

Should there be any questions with respect to this decision, please contact Sandra Morris; by mail addressed to: Director, Technology Center 1700/2900, P.O. Box 1450, Alexandria, VA 22313-1450; or by telephone at (571) 272-2622.

JMStone

Jacqueline Stone
Director, Technology Center 1700/2900

UNITED STATES PATENT AND TRADEMARK OFFICE

Commissioner for Patents
United States Patent and Trademark Office
P.O. Box 1450
Alexandria, VA 22313-1450
www.uspto.gov

8/19/05

KLARQUIST SPARKMAN, LLP
121 SW SALMON STREET
SUITE 1600
PORTLAND, OR 97204

In re Application of
Steven F. Rafoth
Serial No.: 29/198,831
Filed: February 4, 2004
Attorney Docket No.: 5105-67826-01

: ON PETITION

This is a response to applicant's supplemental petition to revive patent application under 37 CFR 1.137(b), submitted March 23, 2005, to revive an unintentionally abandoned application.

This application became abandoned for failure to respond to the Notice of Allowance mailed November 12, 2004, which set a three-month statutory period to submit the Issue Fee. As no response was received by February 14, 2004, the application was abandoned. Applicant filed a Petition to Revive February 18, 2005 which was granted.

A grantable petition for a design application under 37 CFR 1.137(b), as revised December 1, 1997, requires four items: (1) a petition and petition fee; (2) a complete response if not earlier made; (3) a statement that the entire period of delay in prosecution was unintentional; and (4) a terminal disclaimer and disclaimer fee. The requirement for a terminal disclaimer was waived, as the petition was filed before the mailing of the Notice of Abandonment.

Applicant's February 18, 2005 petition was previously granted. Therefore, the Terminal disclaimer and fee will not be processed.

The application will be returned to Publication Division for printing as a patent in due course.

Should there be any questions with respect to this decision, please contact Sandra Morris; by mail addressed to: Director, Technology Center 1700/2900, P.O. Box 1450, Alexandria, VA 22313-1450; or by telephone at (571) 272-2622.

Jacqueline M. Stone

Jacqueline Stone
Director, Technology Center 1700/2900

UNITED STATES PATENT AND TRADEMARK OFFICE

Commissioner for Patents
United States Patent and Trademark Office
P.O. Box 1450
Alexandria, VA 22313-1450
www.uspto.gov

THOMPSON COBURN, LLP
ONE US BANK PLAZA
SUITE 3500
ST LOUIS MO 63101

6/21/05

In re Application of
William T. Risdall
Serial No.: 29/198,837
Filed: February 5, 2004
Attorney Docket No.: 38572-46015

PETITION DECISION

This is a decision on applicant's Petition under 37 CFR 1.137(b) submitted May 17, 2005, to revive an unintentionally abandoned application.

This application became abandoned for failure to fully respond to the Notice of Allowance mailed February 16, 2005, which set a three-month statutory period to pay the Issue fee. As no response was received by May 16, 2005, the application was abandoned; this petition followed.

A grantable petition under 37 CFR 1.137(b), as revised December 1, 1997, requires four items: (1) a petition and petition fee; (2) a complete response if not earlier made; (3) a statement that the entire period of delay in prosecution was unintentional; and (4) a terminal disclaimer and disclaimer fee. The requirement for a terminal disclaimer has been waived, as the petition was submitted before the mailing of the Notice of Abandonment.

Applicant's petition is **GRANTED.**

The application will be forwarded to Publications Branch to be issued into a Patent in due course.

Should there be any questions with respect to this decision, please contact Sandra Morris; by mail addressed to: Director, Technology Center 1700/2900, P.O. Box 1450, Alexandria, VA 22313-1450; or by telephone at (571) 272-2622.

Jacqueline M. Stone

Jacqueline Stone
Director, Technology Center 1700/2900

UNITED STATES PATENT AND TRADEMARK OFFICE

COMMISSIONER FOR PATENTS
UNITED STATES PATENT AND TRADEMARK OFFICE
P.O. BOX 1450
ALEXANDRIA, VA 22313-1450
www.uspto.gov

PIPER RUDNICK, LLP
P.O. Box 64807
Chicago, IL 60664-0807

COPY MAILED

SEP 19 2008

OFFICE OF PETITIONS

In re Patent No. D,546,520	:	
Issue Date: July 10, 2007	:	
Application No. 29/198,889	:	DECISION ON PETITION
Filed: February 6, 2004	:	
Attorney Docket No. P6855DES	:	

This is a decision on the petition under 37 CFR 1.55(a)(2), filed November 29, 2007, requesting acceptance of a certified copy of a foreign priority document after issuance of the patent. A Request for Certificate of Correction to insert the foreign priority information in the text of the Letters Patent was filed on June 19, 2008.

There is no indication that the person signing the instant petition was ever given a power of attorney or authorization of agent to prosecute the above-identified application. However, in accordance with 37 CFR 1.34(a), the signature of Jennifer Lacroix appearing on the petition shall constitute a representation to the United States Patent and Trademark Office that she is authorized to represent the particular party on whose behalf she acts. A courtesy copy of this decision is being mailed to petitioner. Nevertheless, all future correspondence regarding this application file will be directed solely to the address of record until otherwise instructed.

The petition is **DISMISSED**.

Under the rule (37 CFR 1.55), an applicant who wishes to secure the right of priority must comply with certain formal requirements within a specified time. If these requirements are not complied with, the right of priority is lost and cannot thereafter be asserted.

Specifically, the requirements of the rule are (a) that the applicant must file a claim for the right and (b) he or she must also file a certified copy of the original foreign application, and (c) these papers must be filed within a certain time limit. The maximum time limit specified in the rule is that the claim for priority and the priority papers must both be filed before the patent is granted. *See* 37 CFR 1.55(a)(2). If the required papers are not filed within the time limit set, the right of priority is lost. As the record presently discloses that the certified copy of the priority document

was not filed in the application either during prosecution or prior to issuance of the application into a patent, the right of priority to the foreign patent application is lost.

With respect to the concurrently filed request for Certificate of Correction, a claim to foreign priority benefits cannot be perfected via a Certificate of Correction if the requirements of 35 U.S.C. § 119 and 37 CFR 1.55 have not been satisfied in the patented application or, if applicable, its parent. *See* In re Van Esdonk , 187 USPQ 671 (Comm'r. Pat.1975). As such, the request for a Certificate of Correction must also be dismissed as moot. *See* MPEP § 201.16.

However, a reissue was granted in Brenner v. State of Israel , 400 F.2d 789; 158 USPQ 584 (D.C. Cir. 1968), where the only ground urged was applicant's failure to file the certified copy of the original foreign application under 35 U.S.C. § 119 before the patent was granted. Under the circumstances of this case, petitioner may wish to seek relief from his predicament by way of reissue under 35 USC § 251. Id. *See* also 65 F.R. 57024 (Sept. 2000) MPEP §§ 201.16, 1402.

The petition fee is not being refunded, since the petition has been considered, notwithstanding the decision. See Ex parte VENTURA CITRUS ASSOCIATION, 71 USPQ 103, 104 (Comm'r Pat. 1946). The $100 fee for the Request for Certificate of Correction is unnecessary. As such, $100 has been credited to petitioner's deposit account.

Any questions concerning this decision should be directed to the undersigned at (571) 272-3226.

Andrea Smith
Petitions Examiner
Office of Petitions

cc: Jennifer Lacroix
Patent Group
DLA Piper US LLP
203 North LaSalle Street, Suite 1900
Chicago, IL 60601-1293

UNITED STATES PATENT AND TRADEMARK OFFICE

Commissioner for Patents
United States Patent and Trademark Office
P.O. Box 1450
Alexandria, VA 22313-1450
www.uspto.gov

QUARLES & BRADY LLP
411 E. WISCONSIN AVENUE
SUITE 2040
MILWAUKEE WI 53202-4497

COPY MAILED
DEC 05 2008

In re Application of
Terrence K. Mahon
Application No. 29/198,905
Filed: February 6, 2004
Attorney Docket No: 550299.00080

ON PETITION

This is a decision on the petition to withdraw the holding of abandonment, filed March 7, 2005, under 37 CFR 1.181, in accordance with the reasoning of the decision in Delgar Inc. v. Schuyler, 172 USPQ 513. Alternatively, petitioners seek to revive the abandoned application under 37 CFR 1.137(b).[1]

The petition under 37 CFR 1.181 is **GRANTED**.
The petition under 37 CFR 1.137(b) is **DISMISSED** as involving moot issues.

This application became abandoned on June 14, 20004, for failure to file a timely response to the Notice to File Missing Parts mailed April 13, 2004, which set a two (2) month statutory period for reply. Accordingly, a Notice of Abandonment was mailed January 5, 2005. Petitioner asserts that the office communication mailed April 13, 2004 was never received.

The file record discloses that the Office Action was mailed to the address of record which is the same address used for the Notice of Abandonment which was received. Petitioner has provided a copy of the docket report, wherein receipt of the Notice to File

---

[1]Effective December 1, 1997, the provisions of 37 CFR 1.137(b) now provide that where the delay in reply was unintentional, a petition may be filed to revive an abandoned application or a lapsed patent pursuant to 37 CFR 1.137(b). A grantable petition filed under the provisions of 37 CFR 1.137(b) must be accompanied by:

(1) the required reply, unless previously filed. In a nonprovisional application abandoned for failure to prosecute, the required reply may be met by the filing of a continuing application. In a nonprovisional application filed on or after June 8, 1995, and abandoned for failure to prosecute, the required reply may also be met by the filing of a request for continued examination in compliance with § 1.114. In an application or patent, abandoned or lapsed for failure to pay the issue fee or any portion thereof, the required reply must be the payment of the issue fee or any outstanding balance thereof. In an application abandoned for failure to pay the publication fee, the required reply must include payment of the publication fee.

(2) the petition fee as set forth in 37 CFR 1.17(m);

(3) a statement that the entire delay in filing the required reply from the due date for the reply until the filing of a grantable petition pursuant to 37 CFR 1.137(b) was unintentional. The Commissioner may required additional information where there is a question whether the delay was unintentional; and

(4) any terminal disclaimer (and fee as set forth in 37 CFR 1.20(d)) required pursuant to 37 CFR 1.137(c)).

Missing Parts mailed April 13, 2004 would have been filed, had it been received. To show that the Notice mailed April 13, 2004 was not received, petitioner also explains that after searching the docket it was concluded that no correspondence was received for this matter from the USPTO.

In that the statement from the petitioner and the exhibit from the docket record for the instant matter show no entry indicating receipt of the Notice to File Missing Parts mailed April 13, 2004, it is apparent that it was not received. The evidence submitted corroborates non-receipt of the Notice.

In view of the facts set forth in the petition, it is concluded that the Notice was never received at the address of record. Accordingly, the holding of abandonment is withdrawn. No petition fee is necessary and none has been charged. In view thereof, there is no need to treat the petition in the alternative under the unintentional standard.

This matter will be referred to th Office of Patent Application Processing for appropriate action on the response filed March 7, 2005 with the instant petition.

Telephone inquiries concerning this matter should be directed to the undersigned Petitions Attorney at (571) 272-3212.

Patricia Faison-Ball

Patricia Faison-Ball
Senior Petitions Attorney
Office of Petitions

UNITED STATES PATENT AND TRADEMARK OFFICE

Commissioner for Patents
United States Patent and Trademark Office
P.O. Box 1450
Alexandria, VA 22313-1450
www.uspto.gov

BRALDEY D. KITCHEN
25 SOUTHWIND
ALISO VIEJO, CA 92656

COPY MAILED
JUL 0 3 2006
OFFICE OF PETITIONS

In re Application of	:	
Kitchen et al.	:	
Application No. 29/198,932	:	ON PETITION
Filed: February 9, 2004	:	
Title: ELECTRICAL CONDUIT FITTING LOCKNUT WRENCH	:	

This is a decision on the petition under 37 C.F.R. § 1.137(b), filed April 17, 2006, to revive the above-identified application.

The petition is **GRANTED.**

The petition satisfies the conditions for revival pursuant to the provisions of 37 CFR 1.137(b) in that (1) the reply in the form of the Issue Fee Transmittal with payment of the issue fee; (2) the petition fee; (3) the required statement of unintentional delay have been received; and (4) a terminal disclaimer with fee. Accordingly, the response has been accepted as having been unintentionally delayed.

This matter is being referred to the Publishing Division for processing into a patent.

Telephone inquiries regarding this decision should be directed to the undersigned at (571) 272-3282.

Liana Chase
Petitions Examiner
Office of Petitions

UNITED STATES PATENT AND TRADEMARK OFFICE

Commissioner for Patents
United States Patent and Trademark Office
P.O. Box 1450
Alexandria, VA 22313-1450
www.uspto.gov

LEVISOHN, BERGER & LANGSAM, LLP
805 THIRD AVENUE, 19TH FLOOR
NEW YORK, NY 10022

COPY MAILED
OCT 28 2005
OFFICE OF PETITIONS

In re Application of :
Shah, et al. :
Application No. 29/198,999 :
Filed: February 6, 2004 :
Attorney Docket No. 1355.090

ON PETITION

This is a decision on the petition under 37 CFR 1.137(a), filed September 6, 2005, to revive the above-identified application.

The petition under 37 CFR 1.137(a) is **DISMISSED**.

Any request for reconsideration or petition under 37 CFR 1.137(b) must be submitted within TWO (2) MONTHS from the mail date of this decision. Extension of time under 37 CFR 1.136(a) are permitted. The reconsideration request should include a cover letter entitled "Renewed Petition Under 37 CFR 1.137(a)." This is **not** a final agency action within the meaning of 5 U.S.C § 704.

The above-identified application became abandoned for failure to reply to The "Notice of Allowance and Issue Fee Due" mailed October 28, 2004, which set a statutory period for reply of three (3) months from its mailing date. A proper response was not received within the allowed period, and the application became abandoned on January 29, 2005.

A grantable petition under 37 CFR 1.137(a)[1] must be accompanied by: (1) the required reply,[2] unless previously filed; (2) the petition fee as set forth in 37 CFR 1.17(1); (3) a showing to the satisfaction of the Commissioner that the entire delay in filing the required reply from the due date for the reply until the filing of a grantable petition pursuant to this paragraph was unavoidable; and (4) any terminal disclaimer required by 37 CFR 1.137(c).

[1] As amended effective December 1, 1997. See Changes to Patent Practice and Procedure; Final Rule Notice 62 Fed. Reg. 53131, 53194-95 (October 10, 1997), 1203 Off. Gaz. Pat. Office 63, 119-20 (October 21, 1997).

[2] In a nonprovisional application abandoned for failure to prosecute, the required reply may be met by the filing of a continuing application. In an application or patent, abandoned or lapsed for failure to pay the issue fee or any portion thereof, the required reply must be the payment of the issue fee or any outstanding balance thereof.

The instant petition lacks items (1) and (4).

The Commissioner is responsible for determining the standard for unavoidable delay and for applying that standard.

"In the specialized field of patent law, . . . the Commissioner of Patent and Trademarks is primarily responsible for the application and enforcement of the various narrow and technical statutory and regulatory provisions. The Commissioner's interpretation of those provisions is entitled to considerable deference."[3]

"[T]he Commissioner's discretion cannot remain wholly uncontrolled, if the facts **clearly** demonstrate that the applicant's delay in prosecuting the application was unavoidable, and that the Commissioner's adverse determination lacked **any** basis in reason or common sense."[4]

"The court's review of a Commissioner's decision is 'limited, however, to a determination of whether the agency finding was arbitrary, capricious, an abuse of discretion, or otherwise not in accordance with the law.'"[5]
"The scope of review under the arbitrary and capricious standard is narrow and a court is not to substitute its judgment for that of the agency."[6]

The standard

"[T]he question of whether an applicant's delay in prosecuting an application was unavoidable must be decided on a case-by-case basis, taking all of the facts and circumstances into account."[7] The general question asked by the Office is: "Did petitioner act as a reasonable and prudent person in relation to his most important business?"[8] Nonawarness of a PTO rule will not constitute unavoidable delay.[9]

---

[3]Rydeen v. Quigg, 748 F.Supp. 900, 904, 16 U.S.P.Q.2d (BNA) 1876 (D.D.C. 1990), aff'd without opinion (Rule 36), 937 F.2d 623 (Fed. Cir.1991) (citing Morganroth v. Quigg, 885 F.2d 843, 848, 12 U.S.P.Q.2d (BNA) 1125 (Fed. Cir. 1989); Ethicon, Inc. v. Quigg 849 F.2d 1422, 7 U.S.P.Q.2d (BNA 1152 (Fed. Cir. 1988) ("an agency' interpretation of a statute it administers is entitled to deference"); see also Chevron U.S.A. Inc. v. Natural Resources Defence Council, Inc., 467 U.S. 837, 844, 81 L. Ed. 694, 104 S. Ct. 2778 (1984) ("if the statute is silent or ambiguous with respect to the specific issue, the question for the court is whether the agency's answer is based on a permissible construction of the statute.")

[4]Commissariat A L'Energie Atomique et al. v. Watson, 274 F.2d 594, 597, 124 U.S.P.Q. (BNA) 126 (D.C. Cir. 1960) (emphasis added).

[5]Haines v. Quigg, 673 F. Supp. 314, 316, 5 U.S.P.Q.2d (BNA) 1130 (N.D. Ind. 1987) (citing Camp v. Pitts, 411 U.S. 138, 93 S. Ct.1241, 1244 (1973) (citing 5 U.S.C. §706 (2)(A)); Beerly v. Dept. of Treasury, 768 F.2d 942, 945 (7th Cir. 1985); Smith v. Mossinghoff, 217 U.S. App. D.C. 27, 671 F.2d 533, 538 (D.C. Cir.1982)).

[6]Ray v. Lehman, 55 F.3d 606, 608, 34 U.S.P.Q2d (BNA) 1786 (Fed. Cir. 1995) (citing Motor Vehicles Mfrs. Ass'n v. State Farm Mut. Auto. Ins. Co., 463 U.S. 29, 43, 77 L.Ed.2d 443, 103 S. Ct. 2856 (1983)).

[7]Id.

[8]See In re Mattulah, 38 App. D.C. 497 (D.C. Cir. 1912).

Application of the standard to the current facts and circumstances

In the instant petition, petitioner maintains that the circumstances leading to the abandonment of the application meet the aforementioned unavoidable standard and, therefore, petitioner qualifies for relief under 37 CFR 1.137(a). Petitioner argues that the present attorney of record was not aware that a Notice of Allowance and Issue Fee Due had been issued, as it was mailed to a previous attorney of record and the previous attorney of record did not inform petitioner of the mailing of the Notice of Allowance and Issue Fee Due.

With regard to item (3) above, petitioner's argument is not persuasive. The record reveals that the Notice of Allowance and Issue Fee Due, mailed October 28, 2004, was properly mailed to Ezra Sutton at an address in Woodbridge, New Jersey as this was address of record on October 28, 2004. The Revocation of Power of Attorney and Change of Correspondence Address was not filed until December 14, 2004. Applicants are required to provide the Office with prompt notification of a change of address. See MPEP 601.03. If, as in this case, an Office communication is mailed before applicant notifies the Office of a change in the correspondence address, any resulting abandonment of the application that occurs because the new attorney of record does not receive the previously mailed Office communication does not constitute unavoidable delay. Further to this point, Section 711.03 of the *Manual of Patent Examining Procedure* provides, in pertinent part, that:

> . . . where an application becomes abandoned as a consequence of a change of correspondence address (the Office action being mailed to the old, uncorrected address and failing to reach the the applicant n a sufficient time to permit a timely reply) an adequate showing of unavoidable delay will require a showing that due care was taken to adhere to the requirement of prompt notification in each concerned application of the change of correspondence address, and must include an adequate showing that a timely notification of the change of correspondence address was filed in the application concerned, and in a manner reasonably calculated to call attention to the fact that it was a notification of a change of address. The following do not constitute proper notification of a change of correspondence address . . . the lack of notification, or belated notification, to the U.S. Patent and Trademark Office of the change of correspondence address.

The change of correspondence address filed in this application was not timely and the Notice of Allowance and Issue Fee Due was properly mailed to the address of record. Thereafter, it either incumbent upon Mr. Sutton to apprise the new attorney of record of the applicant prosecution history or, if Mr. Sutton was not able or willing to do this, for the new attorney of record to promptly familiarize himself with the application's prosecution history. The instant petition

---

[9]See Smith v. Mossinghoff, 671 F.2d 533, 538, 213 U.S.P.Q. (BNA) 977 (Fed. Cir. 1982) (citing Potter v. Dann, 201 U.S.P.Q. (BNA) 574 (D.D.C. 1978) for the proposition that counsel's nonawarness of PTO rules does not constitute "unavoidable" delay)). Although court decisions have only addressed the issue of lack of knowledge of an attorney, there is no reason to expect a different result due to lack of knowledge on the part of a pro se (one who prosecutes on his own) applicant. It would be inequitable for a court to determine that a client who spends his hard earned money on an attorney who happens not to know a specific rule should be held to a higher standard than a pro se applicant who makes (or is forced to make) the decision to file the application without the assistance of counsel.

makes clear that the attorney of record was not prompted to learn more about the application's history until receiving the Supplemental Notice of Allowability in May of 2005—four months after the application became abandoned by operation of law. Arguably, the abandonment of the application might have been avoided if the Power of Attorney and Change of Correspondence Address were timely submitted or if a prompt effort were made to know the application's history soon after the new power of attorney was filed. The petition is dismissed, accordingly.

As to item (4), a terminal disclaimer pursuant to 37 CFR 1.137(d) was not found with the petition, but is required. Any renewed petition filed, or a petition under 37 CFR 1.137(b), must be accompanied by a terminal disclaimer satisfying the requirement of 37 CFR 1.137(d).

The instant petition fee of $250.00 will be charged to deposit account 02-2105.

Alternatively, petitioner may revive the application based on unintentional abandonment under 37 CFR 1.137(b) (enclosed). A grantable petition pursuant to 37 CFR 1.137(b) must be accompanied by the required reply, the required petition fee ($1,500.00 for a large entity and $750.00 for a verified small entity), and a statement that the **entire** delay in filing the required reply from the due date for the reply until the filing of a grantable petition pursuant to 37 CFR 1.137(b) was unintentional

Further correspondence with respect to this matter should be addressed as follows:

By mail: Commissioner for Patents
United States Patent and Trademark Office
Box 1450
Alexandria, VA 22313-1450

By facsimile: (571) 273-8300
Attn: Office of Petitions

Telephone inquiries concerning this matter may be directed to the undersigned at (571) 272-3222.

Kenya A. McLaughlin

Kenya A. McLaughlin
Petitions Attorney
Office of Petitions

Enclosure: Form PTO/SB/64

UNITED STATES PATENT AND TRADEMARK OFFICE

Commissioner for Patents
United States Patent and Trademark Office
P.O. Box 1450
Alexandria, VA 22313-1450
www.uspto.gov

BLANK ROME LLP
600 NEW HAMPSHIRE AVENUE,
N.W.
WASHINGTON, DC 20037

COPY MAILED

JAN 27 2006

OFFICE OF PETITIONS

In re Application of

Shah, et al.

Application No. 29/198,999

Filed: February 6, 2004

Attorney Docket No. 1355.090

DECISION ON PETITION

This is a decision on the petition under 37 CFR §1.137(b), November 15, 2005, to revive the above-identified application.

The petition is **dismissed**.

Any request for reconsideration of this decision must be submitted within TWO (2) MONTHS from the mail date of this decision. Extensions of time under 37 CFR 1.136(a) are permitted. The reconsideration request should include a cover letter entitled "Renewed Petition" under 37 CFR 1.137(b)."

The above-identified application became abandoned for failure to reply to The "Notice of Allowance and Issue Fee Due" mailed October 28, 2004, which set a statutory period for reply of three (3) months from its mailing date. A proper response was not received within the allowed period, and the application became abandoned on January 29, 2005.

Effective December 1, 1997, the provisions of 37 CFR 1.137(b) now provide that where the delay in reply was unintentional, a petition may be filed to revive an abandoned application or a lapsed patent pursuant to 37 CFR 1.137(b). A grantable petition pursuant to 37 CFR 1.137(b) must be accompanied by:

(1) the required reply, unless previously filed. In a non-provisional application abandoned for failure to prosecute, the required reply may be met by the filing of a continuing application. In an application or patent, abandoned or lapsed for failure to pay the issue fee, or any portion thereof, the required reply must be the payment of the issue fee or any outstanding balance thereof.

(2) the petition fee as set forth in 37 CFR 1.17(m);

(3) a statement that the entire delay in filing the required reply from the due date for the reply until the filing of a grantable petition pursuant to 37 CFR 1.137(b) was unintentional. The Commissioner may require additional information where there is a question whether the delay was unintentional; and

(4) any terminal disclaimer (and fee set forth in 37 CFR 1.20(d)) required pursuant to 37 CFR 1.137(d).

The instant petition does not satisfy the requirements of item (4) above.

As to item (4), the terminal disclaimer was not found with the petition papers. The subject application is a design application, therefore; a terminal disclaimer is required in order to revive the application. Any renewed petition filed must be accompanied by the completed terminal disclaimer form, which is enclosed for petitioner's convenience, and the fee required by 37 CFR 1.321. Pursuant to 37 CFR 1.137(d), the terminal disclaimer must dedicate to the public a terminal part of the term of any patent granted from this application that is equivalent to the period of abandonment of the application.

The address as cited on the petition differs from the address that is now of record for this application. Although a courtesy copy of this decision is being mailed to the address cited on the petition, all future correspondence will be mailed solely to the address of record until appropriate written instructions to the contrary are received.

Further correspondence with respect to this matter should be addressed as follows:

By mail: Mail Stop Petitions
Commissioner for Patents
United States Patent and Trademark Office
Box 1450
Alexandria, VA 22313-1450

By facsimile: (571) 273-8300

Telephone inquiries concerning this matter may be directed to the undersigned at (571) 272-3222.

Kenya A. McLaughlin
Petitions Attorney
Office of Petitions

Enclosure: "Terminal Disclaimer to Accompany Petition"

cc:
Levishon, Berger & Langsam, LLP
805 Third Avenue, 19th Floor
New York, NY 10022

UNITED STATES PATENT AND TRADEMARK OFFICE

Commissioner for Patents
United States Patent and Trademark Office
P.O. Box 1450
Alexandria, VA 22313-1450
www.uspto.gov

BLANK ROME LLP
600 NEW HAMPSHIRE AVENUE, N.W.
WASHINGTON, DC 20037

COPY MAILED

FEB 27 2006

OFFICE OF PETITIONS

In re Application of:
Shah, et al.
Application No. 29/198,999
Filed: February 6, 2004
Attorney Docket No. 1355.090

DECISION ON PETITION

This is a decision on the renewed petition under 37 CFR §1.137(b), filed February 17, 2006, to revive the above-identified application.

The renewed petition is **granted.**

The above-identified application became abandoned for failure to reply to The "Notice of Allowance and Issue Fee Due" mailed October 28, 2004, which set a statutory period for reply of three (3) months from its mailing date. A proper response was not received within the allowed period, and the application became abandoned on January 29, 2005. A petition under 37 CFR 1.137(b) was filed on November 15, 2005, and dismissed by a decision mailed January 27, 2006.

The terminal disclaimer filed February 17, 2006, is also noted.

The application is being forwarded to the Office of Patent Publications for further processing.

Telephone inquiries concerning this decision may be directed to the undersigned at (571) 272-3222.

Kenya A. McLaughlin
Petitions Attorney
Office of Petitions

UNITED STATES DEPARTMENT OF COMMERCE
Patent and Trademark Office
Address: COMMISSIONER OF PATENTS AND TRADEMARKS
Washington, D.C. 20231

SERIAL NUMBER	FILING DATE	FIRST NAMED APPLICANT	ATTORNEY DOCKET NO.
29/199,210	06-Apr-04	BRANDON LECK, ET AL.	25040-1131

Title: BOTTLE

Art Unit	Paper Number

Correspondence Address:
KEVIN K. KING
SUTHERLAND ASBILL & BRENNAN LLP
999 PEACHTREE STREET, NE
ATLANTA, GEORGIA 30309

PATENT & TRADEMARK OFFICE
MAILED
JUN 29 2004 N.N
LICENSING & REVIEW

Please find attached a communication from the Examiner regarding the Petition for Retroactive License under 37 CFR 5.25.

UNITED STATES PATENT AND TRADEMARK OFFICE

UNDER SECRETARY OF COMMERCE FOR INTELLECTUAL PROPERTY AND
DIRECTOR OF THE UNITED STATES PATENT AND TRADEMARK OFFICE
WASHINGTON, DC 20231
www.uspto.gov

Kevin W. King
SUTHERLAND ASBILL & BRENNAN LLP
999 Peachtree Street, NE
Atlanta, Georgia 30309-3996

In re:	Brandon Leck et al	:	DECISION ON REQUEST
Serial No.:	29/199,210	:	UNDER 37 CFR 5.25
Filing date:	06 April 2004		
Docket No:	25040-1131		

Title: BOTTLE

This is a decision on the petition filed on 06 April 2004 for a retroactive foreign filing license.

37 CFR 5.25(a) requires the following:

1. A listing of each of the foreign countries in which the unlicensed patent application material was filed,
2. The dates on which the material was filed in each country,
3. A verified statement (oath or declaration) containing:
   i. An averment that the subject matter in question was not under a secrecy order at the time it was filed abroad, and that it is not currently under a secrecy order,
   ii. A showing that the license has been diligently sought after discovery of the proscribed foreign filing, and
   iii. An explanation of why the material was filed abroad through error and without deceptive intent without the required license under § 5.11 first having been obtained, and
4. The required fee (§ 1.17(h)).

The petition is **Denied** at this time in that the petition is defective since the requirements set forth in 37 CFR 5.25(a) ii and iii have not been met. The declaration does not contain a narrative description of why the material was filed abroad through error and without deceptive intent without the required license nor does the statement show how the license was diligently sought after. The declaration must be made by the person who was authorized to decide to file the foreign application.

Accordingly, the provisions of 37 CFR 5.25 not having been fully met, the petition is denied, and in the absence of any response within **60 days** of the mailing date of this letter, such denial will

be made final and the final action under 35 U.S.C. 185 will be taken. Extensions of time may be had under 37 C.F.R. 1.136(a).

Andrea M. Valenti

Andrea M. Valenti
Patent Examiner
Group 3643
(703) 305-3010

16 June 2004

SPE RESPONSE FOR CERTIFICATE OF CORRECTION

Paper No.: _____

DATE : August 9, 2007

TO SPE OF : ART UNIT 2914

SUBJECT : Request for Certificate of Correction for Appl. No. 29/199248 patent no. D501486

Please respond to this request for a certificate of correction within 7 days.

Please review the requested changes/corrections as shown in the **COCIN** document(s) in the IFW application image. No new matter should be introduced, nor should the scope or meaning of the claims be changed.

Please complete the response (see below) and forward the completed response to scanning using document code **COCX**.

Magdalene Talley

Certificates of Correction Branch

703-308-9390 ext. 116

Thank You For Your Assistance

The request for issuing the above-identified correction(s) is hereby:

Note your decision on the appropriate box.

- ☐ **Approved** — **All** changes apply.
- ☐ **Approved in Part** — Specify below which changes **do not** apply.
- ☑ **Denied** — State the reasons for denial below.

Comments: Figs 1, 2, 3, 5, 6 and 7 contain new matter. See attached annotated drawings for specific location of prohibited new matter.

IAN SIMMONS
SUPERVISORY PATENT EXAMINER

SPE

2916
Art Unit

SPE RESPONSE FOR CERTIFICATE OF CORRECTION

Paper No.: _____

DATE : August 9, 2007

TO SPE OF : ART UNIT 2914

SUBJECT : Request for Certificate of Correction for Appl. No. 29/199248 patent no. D501486

Please respond to this request for a certificate of correction within 7 days.

Please review the requested changes/corrections as shown in the **COCIN** document(s) in the IFW application image. No new matter should be introduced, nor should the scope or meaning of the claims be changed.

Please complete the response (see below) and forward the completed response to scanning using document code **COCX**.

Magdalene Talley

Certificates of Correction Branch

703-308-9390 ext. 116

Thank You For Your Assistance

The request for issuing the above-identified correction(s) is hereby:

Note your decision on the appropriate box.

- ☐ **Approved** — All changes apply.
- ☐ **Approved in Part** — Specify below which changes **do not** apply.
- ☑ **Denied** — State the reasons for denial below.

Comments: Figs 1, 2, 3, 5, 6 and 7 contain new matter. See attached annotated drawings for specific location of prohibited new matter.

IAN SIMMONS
SUPERVISORY PATENT EXAMINER

SPE

2916
Art Unit

PTOL-308 (REV. 7/03)

U.S. DEPARTMENT OF COMMERCE Patent and Trademark Office

S.N. 29/199248

FIG. 2

29/199248

S.N. 29/199248

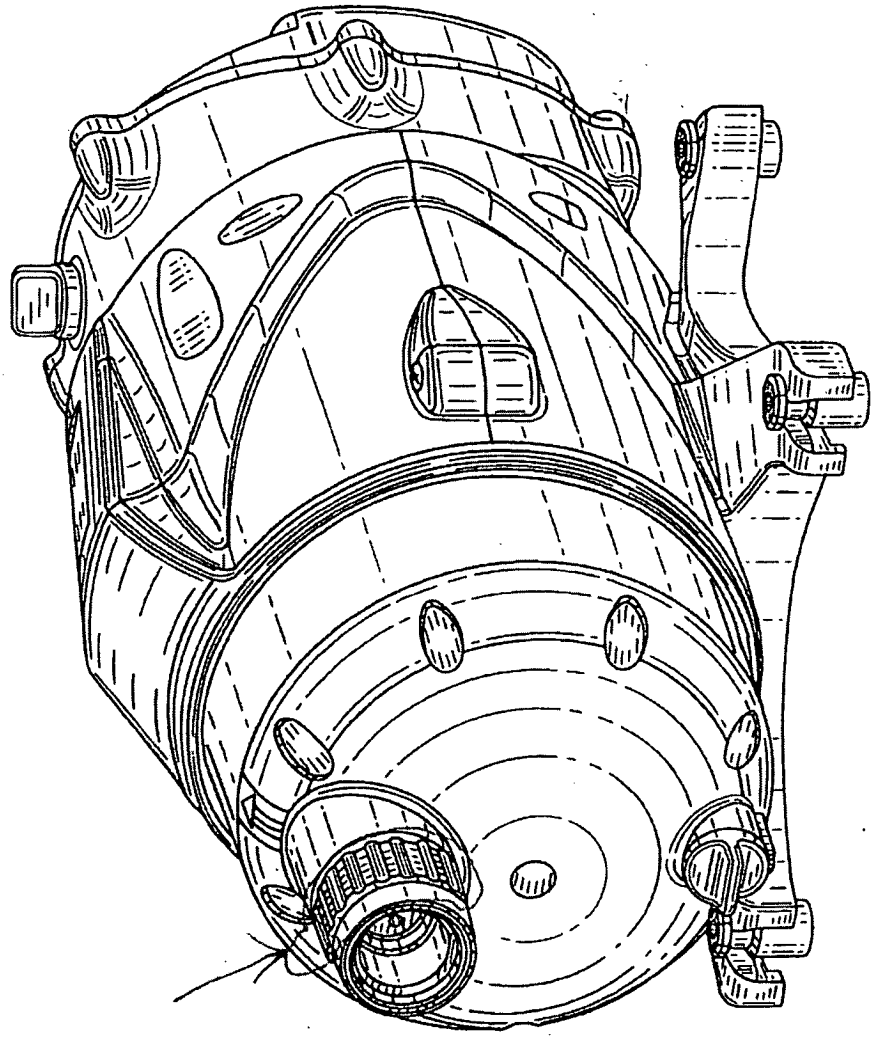

FIG. 3

S.N. 29/199248

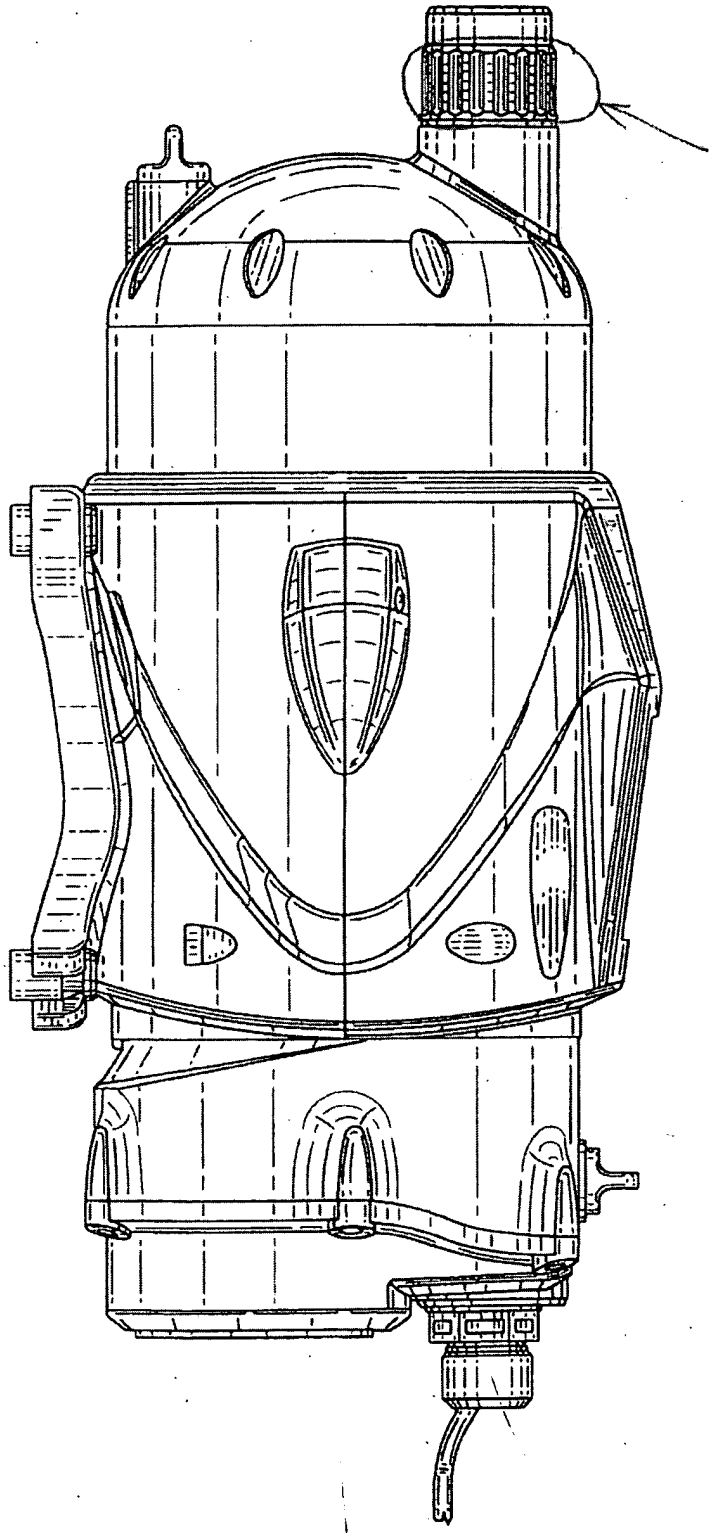

FIG. 5

S.N. 29/199248

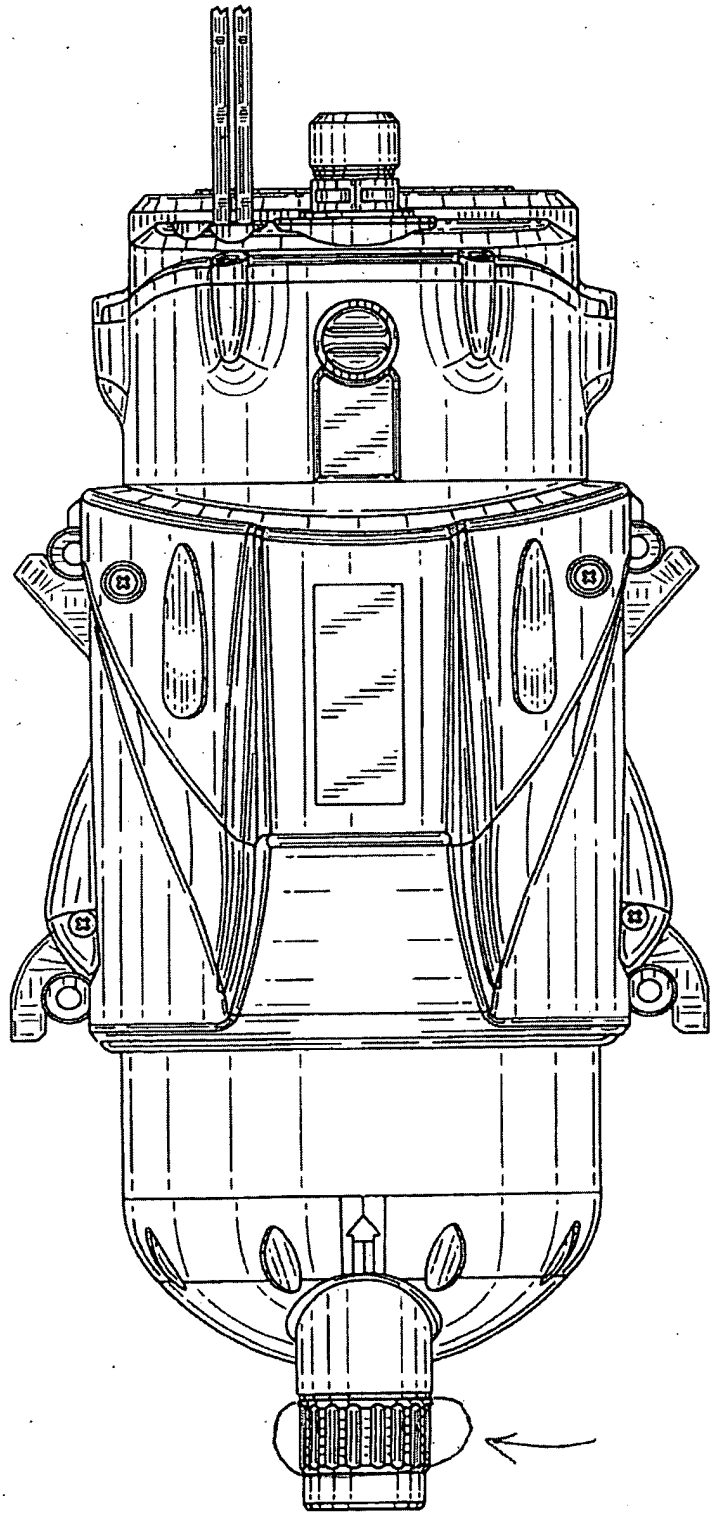

FIG. 6

S.N. 29/199248

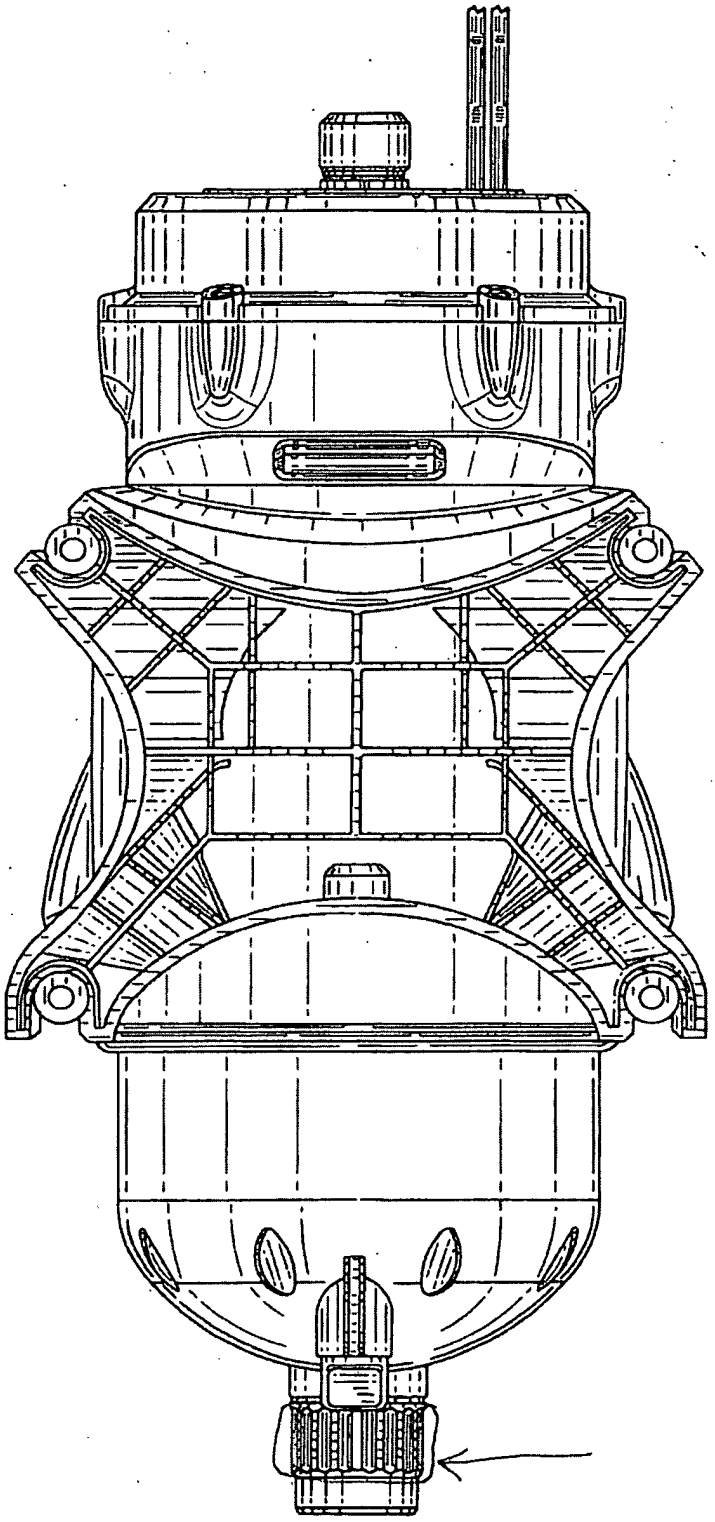

FIG. 7

UNITED STATES PATENT AND TRADEMARK OFFICE

Commissioner for Patents
United States Patent and Trademark Office
P.O. Box 1450
Alexandria, VA 22313-1450
www.uspto.gov

COPY MAILED
JUL 1 4 2004
OFFICE OF PETITIONS

Connolly Bove Lodge & Hutz LLP
P.O. Box 2207
Wilmington DE 19899-2207

In re Application of :
Daniel D. Friel :
Application No. 29/199,256 : DECISION GRANTING PETITION
Filed: February 11, 2004 :
Attorney Docket No. FRIEL-109 :

This is a decision on the petition filed June 1, 2004, requesting that the above-identified application be accorded a filing date of February 11, 2001.

On February 11, 2004, the above-identified application was filed. On April 19, 2004, the Office of Initial Patent Examination mailed a ∘otice of Incomplete Nonprovisional Application" (the Notice"), stating that the application had not been accorded a filing date as the application was deposited without a drawings and that the filing date would be the date the aforementioned items are received. A signed oath or declaration was also required.

In response, the present petition was filed wherein petitioner argues that three sheets of drawings were filed with the original application papers on February 11, 2004. In support, the petition is accompanied by a copy of applicants' postcard receipt whereby the Office acknowledged receipt of drawings with the application papers, although it is not clear how many sheets of drawings.

The evidence supplied with the petition is persuasive. The Office clearly acknowledged receiving some drawings. At this juncture, it is irrelevant that it is not clear how many drawings were received as petitioner is seeking a filing date which petitioner may have gotten with receipt of only one sheet of drawings.

The petition is granted.

The application is being returned to Initial Patent Examination Division for further processing with a filing date of February 11, 2004, including the copy of the drawings filed with the instant petition as part of the original disclosure.

Any inquiries related to this decision should be directed to Kenya A. McLaughlin, Petitions Attorney, at (703)305-0010

Kenya A. McLaughlin

Kenya A. McLaughlin
Petitions Attorney
Office of Petitions

UNITED STATES PATENT AND TRADEMARK OFFICE

Commissioner for Patents
United States Patent and Trademark Office
P.O. Box 1450
Alexandria, VA 22313-1450
www.uspto.gov

NOV 16 2004

CROWELL & MORING LLP
INTELLECTUAL PROPERTY GROUP
P.O. BOX 14300
WASHINGTON DC 20044-4300

In re Application of	:	
Peter Pfeiffer	:	
Application No: 29/199,294	:	WTHDRAWAL
Filed: February 13, 2004	:	FROM ISSUE
Title: Surface Configuration of a Taillight For a Vehicle	:	

The purpose of this communication is to inform you that the above-identified application is being withdrawn from issue pursuant to 37 C.F.R. 1.313.

The application is being withdrawn to permit reopening of prosecution to consider the petition to suspend. See 37CFR 1.313(b)(3).

PTO records reveal that the issue fee has not been paid. If the fee has been submitted, the applicant may request a refund or may request that the fee be credited to a deposit account. However, applicant may wait until the application is either again found allowable or held abandoned. If the application is allowed, upon receipt of a new Notice of Allowance and Issue Fee Due, applicant may request that the previously submitted issue fee be applied toward payment of the issue fee in the amount identified on the new Notice of Allowance and Issue Fee Due. If the application is abandoned, applicant may request either a refund or a credit to a deposit account.

The application is being forwarded to the Examiner for action.

John E. Kittle

John E. Kittle
Director
Technology Center 3700/2900

UNITED STATES PATENT AND TRADEMARK OFFICE

Commissioner for Patents
United States Patent and Trademark Office
P.O. Box 1450
Alexandria, VA 22313-1450
www.uspto.gov

JJGJR.: 08-05

Paper No: __

JOHN P. O'BANION
O'BANION & RITCHEY LLP
400 CAPITOL MALL SUITE 1550
SACRAMENTO CA 95814

COPY MAILED

AUG 1 1 2005

OFFICE OF PETITIONS

In re Application of
Regan :
Application No. 29/199,406 : ON PETITION
Filed: 13 February, 2004 :
Attorney Docket No. REG5453.01B :

This is a decision on the renewed petition filed on 18July, 2005, to revive the above-identified application under 37 C.F.R. §1.137(b) as abandoned due to unintentional delay.

For the reasons set forth below, the petition under 37 C.F.R. §1.137(b) is **GRANTED**.

BACKGROUND

The record reflects that:

- Petitioner failed to reply timely and properly to Notice of Allowance and Fees Due mailed on 7 March, 2005, with reply due under a non-extendable deadline on or before 7 June, 2005;
- the application went abandoned by operation of law after midnight 7 June, 2005;
- it does not appear that the Office mailed the Notice of Abandonment before the instant petition was filed;

- with the instant petition with fee, Petitioner filed the Issue Fee, as the reply, and made the statement of unintentional delay.

STATUTES, REGULATIONS AND ANALYSIS

Congress has authorized the Commissioner to "revive an application if the delay is shown to the satisfaction of the Commissioner to have been "unavoidable." 35 U.S.C. §133 (1994).[1]

The regulations at 37 C.F.R. §1.137(a) and (b) set forth the requirements for a petitioner to revive a previously unavoidably or unintentionally, respectively, abandoned application under this congressional grant of authority.

The language of 35 U.S.C. §133 and 37 C.F.R. §1.137(a) is clear, unambiguous, and without qualification: the delay in tendering the reply to the outstanding Office action, as well as filing the first petition seeking revival, must have been unavoidable for the reply now to be accepted on petition.[2] Delays in responding properly raise the question whether delays are unavoidable.[3] Where there is a question whether the delay was unavoidable, Petitioners must meet the burden of establishing that the delay was unavoidable within the meaning of 35 U.S.C. §133 and 37 C.F.R. §1.137(a).[4]

And the Petitioner must be diligent in attending to the matter.[5] Failure to do so does not constitute the care required under Pratt, and so cannot satisfy the test for diligence and due care. By contrast, unintentional delays are those that do not satisfy the very strict statutory and regulatory requirements of unavoidable delay, and also, by definition, are not intentional.

The requirements for a grantable petition under 37 C.F.R. §1.137(b) are the petition and fee, the

---

[1] 35 U.S.C. §133 provides:
35 U.S.C. §133 Time for prosecuting application.
Upon failure of the applicant to prosecute the application within six months after any action therein, of which notice has been given or mailed to the applicant, or within such shorter time, not less than thirty days, as fixed by the Commissioner in such action, the application shall be regarded as abandoned by the parties thereto, unless it be shown to the satisfaction of the Commissioner that such delay was unavoidable.

[2] Therefore, by example, an unavoidable delay in the payment of the Filing Fee might occur if a reply is shipped by the US Postal Service, but due to catastrophic accident, the delivery is not made.

[3] See: *Changes to Patent Practice and Procedure; Final Rule Notice*, 62 *Fed. Reg.* at 53158-59 (October 10, 1997), 1203 *Off. Gaz. Pat. Office* at 86-87 (October 21, 1997).

[4] See: In re Application of G, 11 USPQ2d 1378, 1380 (Comm'r Pats. 1989).

[5] See: Diligence in Filing Petitions to Revive and Petitions to Withdraw the Holding of Abandonment, 1124 Off. Gaz. Pat. Office 33 (March 19, 1991). It was and is Petitioner's burden to exercise diligence in seeking either to have the holding of abandonment withdrawn or the application revived. See 1124 Off. Gaz. Pat. Office supra.

statement (and possibly a showing) of unintentional delay, a proper reply, and–where appropriate--a terminal disclaimer and fee if the application was filed before 8 June, 1995.

Petitioner has satisfied the requirements of 37 C.F.R.§1.137(b).

CONCLUSION

Accordingly, the instant petition under 37 C.F.R. §1.137(b) hereby is **granted**.

The instant application is released to Publications Branch to be processed into a patent in due course.

Telephone inquiries concerning this decision may be directed to the undersigned at (571) 272-3214.

John J. Gillon, Jr.
Senior Attorney
Office of Petitions

UNITED STATES PATENT AND TRADEMARK OFFICE

Commissioner for Patents
United States Patent and Trademark Office
P.O. Box 1450
Alexandria, VA 22313-1450
www.uspto.gov

JOHN P. O'BANION
O'BANION & RITCHEY LLP
400 CAPITOL MALL SUITE 1550
SACRAMENTO, CA 95814

8/15/05

In re Application of
John E Regan
Serial No.: 29/199,406
Filed: February 13, 2004
Attorney Docket No.: REG5453.01B

: PETITION DECISION

This is a decision on applicant's petition to revive patent application under 37 CFR 1.137(b), filed June 8, 2005, to revive an unintentionally abandoned application.

This application became abandoned for failure to respond to the Notice of Allowance mailed March 7, 2005, which set a three-month statutory period to submit the Issue Fee. As no response was received by June 7, 2005, the application was abandoned; applicant then filed this petition.

A grantable petition for a design application under 37 CFR 1.137(b), as revised December 1, 1997, requires four items: (1) a petition and petition fee; (2) a complete response if not earlier made; (3) a statement that the entire period of delay in prosecution was unintentional; and (4) a terminal disclaimer and disclaimer fee. The requirement for a terminal disclaimer has been waived, as the petition was filed before the mailing of the Notice of Abandonment.

Applicant's petition is **GRANTED**.

The application will be forwarded to Publication Division for printing as a patent in due course.

Should there be any questions with respect to this decision, please contact Sandra Morris; by mail addressed to: Director, Technology Center 1700/2900, P.O. Box 1450, Alexandria, VA 22313-1450; or by telephone at (571) 272-2622.

Jacqueline M. Stone

Jacqueline Stone
Director, Technology Center 1700/2900

UNITED STATES PATENT AND TRADEMARK OFFICE

COMMISSIONER FOR PATENTS
UNITED STATES PATENT AND TRADEMARK OFFICE
P.O. BOX 1450
ALEXANDRIA, VA 22313-1450
www.uspto.gov

COPY MAILED

FEB 20 2007

OFFICE OF PETITIONS

RICHARD JOHN BARTZ
SUITE 350
6750 FRANCE AVENUE SOUTH
EDINA, MN 55435

In re Application of
Marc O. Nelson
Application No. 29/199,424
Filed: February 17, 2004
Attorney Docket No. N119.12.4

ON PETITION

This is a decision on the petition, filed August 9, 2006, under 37 CFR 1.137(b) to revive the above-identified application.

The application became abandoned for a failure to reply in a timely manner to an Office action mailed October 11, 2005. A Notice of Abandonment was mailed on May 22, 2006. In response, on August 9, 2006, the present petition was filed.

The petition satisfies the requirements of 37 CFR 1.137(b) in that petitioner has supplied (1) the reply in the form of an amendment; (2) the petition fee of $750.00; (3) the requisite statement of unintentional delay and (4) a terminal disclaimer, including the $65 fee as set forth in 37 CFR 1.20(d)).

The terminal disclaimer filed August 9, 2006 has been entered and made of record.

The application is being referred to Technology Center AU 2911 for consideration of the amendment filed August 9, 2006.

Telephone inquiries concerning this decision should be directed to the undersigned at (571) 272-3204. Inquiries relating to further prosecution should be directed to the Technology Center.

Sherry D. Brinkley
Petitions Examiner
Office of Petitions

UNITED STATES PATENT AND TRADEMARK OFFICE

Commissioner for Patents
United States Patent and Trademark Office
P.O. Box 1450
Alexandria, VA 22313-1450
www.uspto.gov

Devon A. Rolf
Garmin International, Inc.
1200 East 151st Street
Olathe, KS 66062

COPY MAILED

FEB 08 2006

OFFICE OF PETITIONS

In re Application of
Langner et al.
Application No. 29/199,434
Filed: February 13, 2004
Attorney Docket No. 702.317

DECISION ON PETITION

This is a decision on the "Petition to Withdraw Holding of Abandonment," filed on January 24, 2006.

On August 19, 2005, the Office mailed a Notice of Allowance and Fee(s) Due ("Notice of Allowance"), which set a three-month statutory period to reply. In the apparent absence of the timely payment of the issue and publication fees, the application was held abandoned on November 20, 2005. A Notice of Abandonment was mailed on January 12, 2006.

In the present petition, the practitioner requested that the Office withdraw the holding of abandonment due to non-receipt of the Notice of Allowance, remail the Notice and restart the period for response.

PETITION TO WITHDRAW THE HOLDING OF ABANDONMENT

A review of the record indicates no irregularity in the mailing of the Notice of Allowance, and in the absence of any irregularity in the mailing, there is a strong presumption that the Notice of Allowance was properly mailed to the address of record. This presumption may be overcome by a showing that the Notice of Allowance was not in fact received. The showing required to establish non-receipt of an Office communication must include a statement from the practitioner, stating that the practitioner did not receive the Office communication and attesting to the fact that a search of the file jacket and docket records indicates that the Office communication was not received. A copy of the docket record where the non-received Office communication would have been entered had it been received and docketed must be attached to and referenced in practitioner's statement.[1] For example, if a three-month period

[1] M.P.E.P. § 711.03(c); See Notice entitled "Withdrawing the Holding of Abandonment When Office Actions Are Not Received," 1156 O.G. 53 (November 16, 1993).

for reply was set in the non-received Office communication, a copy of the docket report showing all replies docketed for a date three months from the mail date of the non-received Office communication must be submitted as documentary proof of non-receipt of the Office communication. The showing outlined above may not be sufficient if there are circumstances that point to a conclusion that the Office communication may have been lost after receipt rather than a conclusion that the Office communication was lost in the mail (*e.g.* if the practitioner has a history of not receiving Office communications).

After reviewing the documents submitted on petition, the Office concludes that the showing of record is sufficient to warrant withdrawal of the holding of abandonment. The practitioner submitted a copy of the docket record where the non-received Notice of Allowance would have been entered had it been received and docketed. Additionally, the practitioner attested to the fact that a search of the file jacket and docket records indicated that the Notice of Allowance was not received.

As applicant made the required showing, the petition to withdraw the holding of abandonment is granted. In view of the evidence presented in support of the contention that the practitioner did not receive the original Notice of Allowance of August 19, 2005, **Technology Center Art Unit 2911 shall remail the Notice of Allowance and restart the period for response.**

This matter is being referred to Technology Center Art Unit 2911 for further action in accordance with the present decision.

Telephone inquiries related to this decision may be directed to the undersigned at (571) 272-3211.

Christina Tartera Donnell

Christina Tartera Donnell
Senior Petitions Attorney
Office of Petitions

UNITED STATES PATENT AND TRADEMARK OFFICE

COMMISSIONER FOR PATENTS
UNITED STATES PATENT AND TRADEMARK OFFICE
P.O. BOX 1450
ALEXANDRIA, VA 22313-1450
www.uspto.gov

Paper No.

BACON & THOMAS, PLLC
625 SLATERS LANE
FOURTH FLOOR
ALEXANDRIA, VA 22314

COPY MAILED

DEC 17 2004

OFFICE OF PETITIONS

In re Application of :
Lee et al. :
Application No. 29/199,514 :
Filed: February 18, 2004 :
For: PHOTOGRAPHABLE BINOCULARS : NOTICE

This is a notice regarding your request for acceptance of a fee deficiency submission under 37 CFR 1.28. On September 1, 1998, the Court of Appeals for the Federal Circuit held that 37 CFR 1.28(c) is the sole provision governing the time for correction of the erroneous payment of the issue fee as a small entity. **See DH Technology v. Synergystex International, Inc. 154 F.3d 1333, 47 USPQ2d 1865 (Fed. Cir. Sept. 1, 1998).**

The Office no longer investigates or rejects original or reissue applications under 37 CFR 1.56. **1098 Off. Gaz. Pat. Office 502 (January 3, 1989).** Therefore, nothing in this Notice is intended to imply that an investigation was done.

Your fee deficiency submission under 37 CFR 1.28 is hereby **ACCEPTED.**

This file is an Image File Wrapper file and, as such, no forwarding of the file is necessary. Processing of the application by the Publishing Division continues in due course.

Telephone inquiries concerning this matter should be directed to the undersigned at (571) 272-3232.

Derek L. Woods
Attorney Advisor
Office of Petitions

UNITED STATES PATENT AND TRADEMARK OFFICE

Commissioner for Patents
United States Patent and Trademark Office
P.O. Box 1450
Alexandria, VA 22313-1450
www.uspto.gov

MOTOROLA INC
600 NORTH US HIGHWAY 45
ROOM AS437
LIBERTYVILLE IL 60048-5343

COPY MAILED

DEC 23 2005

OFFICE OF PETITIONS

In re Application of	:	
Ma et al.	:	
Application No. 29/199,536	:	ON PETITION
Filed: February 17, 2004	:	
Attorney Docket No. CS24034RL	:	

This is a decision on the petition under 37 C.F.R. § 1.137(b), filed November 25, 2005, to revive the above-identified application.

The petition is **GRANTED.**

The petition satisfies the conditions for revival pursuant to the provisions of 37 CFR 1.137(b) in that (1) the reply in the form of Formal Drawings; (2) the petition fee; (3) the required statement of unintentional delay have been received; and (4) the terminal disclaimer and requisite fee. Accordingly, the response has been accepted as having been unintentionally delayed.

This matter is being referred to the Publishing Division.

Telephone inquiries regarding this decision should be directed to the undersigned at (571) 272-3282.

Liana Chase
Petitions Examiner
Office of Petitions

UNITED STATES PATENT AND TRADEMARK OFFICE

COMMISSIONER FOR PATENTS
UNITED STATES PATENT AND TRADEMARK OFFICE
P.O. BOX 1450
ALEXANDRIA, VA 22313-1450
www.uspto.gov

APR 27 2004

Barber Legal
P.O. Box 16220
Golden CO 80402-6004

In re Application of	:	
Kim et al	:	DECISION ON PETITION
Serial No.: 29/199,561	:	
Filed: February 18, 2004	:	
For: Multi-Dimensioned Easily Adjustable	:	
Single Sheet Container Formula With Indicia	:	

This is in response to applicants' petition filed February 18, 2004, to make the above-identified application special under the provisions of 37 CFR 1.102(c), based on the age of the applicant.

Applicant has satisfied the provisions set forth in M.P.E.P. 708.02, IV. Therefore the petition is **GRANTED**.

The application will be forwarded to the examiner for action on the merits commensurate with this decision.

Should there be any questions with regard to this letter please contact John Kittle by letter addressed to the Director, Technology Center 3700/2900, P.O. Box 1450 Alexandria, VA 22313-1450, or by telephone at (703) 308-0873 or by facsimile transmission at (703) 308-3139.

John E. Kittle

John E. Kittle
Director,
Technology Center 3700/2900

UNITED STATES PATENT AND TRADEMARK OFFICE

COMMISSIONER FOR PATENTS
UNITED STATES PATENT AND TRADEMARK OFFICE
P.O. BOX 1450
ALEXANDRIA, VA 22313-1450
www.uspto.gov

DRINKER BIDDLE & REATH
ONE LOGAN SQUARE
18TH AND CHERRY STREETS
PHILADELPHIA PA 19103-6996

In re Application of	:	
Andrew D. Breton et al	:	
Serial No.: 29/199,584	:	**REQUEST FOR EXPEDITED EXAMINATION**
Filed: February 18, 2004	:	
For: Teleconference Speakerphone	:	

This is in response to the Request for expedited examination applicant filed February 18, 2004, to expedite the above-identified application under the provisions of 37 CFR 1.155.

Applicant has satisfied the provisions set forth in 37 CFR 1.155, thus the petition is **GRANTED**.

The application will be forwarded to the examiner for action on the merits commensurate with this decision.

Should there be any questions with regard to this letter please contact John Kittle by letter addressed to the Director, Technology Center 3700/2900, P.O. Box 1450 Alexandria, VA 22313-1450 or by telephone at (703)308-0873 or by facsimile transmission at (703)308-3139.

John E. Kittle

John E. Kittle
Director
Technology Center 3700/2900

UNITED STATES PATENT AND TRADEMARK OFFICE

Commissioner for Patents
United States Patent and Trademark Office
P.O. Box 1450
Alexandria, VA 22313-1450
www.uspto.gov

RADER FISHMAN & GRAUER PLLC
LION BUILDING
1233 20TH STREET N.W., SUITE 501
WASHINGTON DC 20036

COPY MAILED

MAY 10 2007

OFFICE OF PETITIONS

In re Application of	:	
Minoru Shimizu et al.	:	
Application No. 29/199,592	:	ON PETITION
Filed: February 19, 2004	:	
Attorney Docket No. SDE-1496	:	

This is a decision on the petition under 37 CFR 1.137(b), filed November 2, 2006, to revive the above-identified design application.

The petition is **GRANTED**.

The petition satisfies the requirements of 37 CFR 1.137(b) in that petitioner has supplied (1) the reply in the form of a Continued Prosecution Application (CPA) under 37 CFR 1.53(d); (2) the petition fee of $1500; (3) a proper statement of unintentional delay; and (4) a terminal disclaimer and fee as required by 37 CFR 1.137(d).

The terminal disclaimer is accepted and has been made of record.

This application is being revived solely for purposes of continuity. As continuity has been established by this decision, the application is again abandoned in favor of the CPA.

Telephone inquiries concerning this decision should be directed to Terri Williams at (571) 272-2991.

This application is being referred to Technology Center AU 2916 for processing of the CPA.

Liana Walsh
Petitions Examiner
Office of Petitions

UNITED STATES PATENT AND TRADEMARK OFFICE

Commissioner for Patents
United States Patent and Trademark Office
P.O. Box 1450
Alexandria, VA 22313-1450
www.uspto.gov

BAKER BOTTS L.L.P.
30 ROCKEFELLER PLAZA
44TH FLOOR
NEW YORK NY 10112-4498

COPY MAILED

SEP 1 0 2008

OFFICE OF PETITIONS

In re Application of :
Fenton, et al. :
Application No. 29/199,605 :
Filed: February 18, 2004 :
Attorney Docket No. A36165-072841.0236 :

NOTICE

This is a notice regarding your request for acceptance of a fee deficiency submission under 37 CFR 1.28, filed July 10, 2008.

The Office no longer investigates or rejects original or reissue patent under 37 CFR 1.56. **1098 Off. Gaz. Pat. Office 502 (January 3, 1989)**. Therefore, nothing in this Notice is intended to imply that an investigation was done.

Your fee deficiency submission under 37 CFR 1.28 is hereby **ACCEPTED**. Deposit account no. 02-4377 will be charged $420.00.

This patent is no longer entitled to small entity status. Accordingly, all future fees paid in this patent must be paid at the large entity rate.

Inquiries related to this communication should be directed to the undersigned at (571) 272-3230.

Shirene Willis Brantley

Shirene Willis Brantley
Senior Petitions Attorney
Office of Petitions

UNITED STATES PATENT AND TRADEMARK OFFICE

Commissioner for Patents
United States Patent and Trademark Office
P.O. Box 1450
Alexandria, VA 22313-1450
www.uspto.gov

8/4/05

VENABLE, BAETJER, HOWARD & CIVILETTI, LLP
P.O. BOX 34385
WASHINGTON DC 20043-9998

In re Application of
Peter Zielke
Serial No.: 29/199,643
Filed: February 19, 2004
Attorney Docket No.: 32128-201189

: PETITION DECISION

This is a decision on applicant's Petition to revive patent application under 37 CFR 1.181 received March 7, 2005, due to non-receipt of the Office action.

This application became abandoned for failure to respond to the Notice to File Missing Parts of Nonprovisional Application, mailed April 21, 2004, which set a two-month statutory period to submit the filing fee, a signed oath or declaration and a surcharge. As no response was received by June 21, 2004, a Notice of Abandonment was mailed January 6, 2005. Applicant then filed this petition.

Applicant has submitted copies of the docket file and docket records, which show that the applicant never received the Notice to File Missing Parts. Therefore, the case will be returned to pending status.

Applicant's petition is **GRANTED.**

The application will be forwarded to an Examiner for prompt remailing of the Notice in due course.

Should there be any questions with respect to this decision, please contact Sandra Morris; by mail addressed to: Director, Technology Center 1700/2900, P.O. Box 1450, Alexandria, VA 22313-1450; or by telephone at (571) 272-2622.

Jacqueline M. Stone

Jacqueline Stone
Director, Technology Center 1700/2900

UNITED STATES PATENT AND TRADEMARK OFFICE

Commissioner for Patents
United States Patent and Trademark Office
P.O. Box 1450
Alexandria, VA 22313-1450
www.uspto.gov

BAKER BOTTS L.L.P.
30 ROCKEFELLER PLAZA
44TH FLOOR
NEW YORK NY 10112-4498

COPY MAILED

SEP 26 2008

OFFICE OF PETITIONS

In re Patent No. D536875 :
Issue Date: February 20, 2007 :
Application No. 29/199,677 :
Filed: February 18, 2004 :
Attorney Docket No. A36167-072841.0238 :

NOTICE

This is a notice regarding your request for acceptance of a fee deficiency submission under 37 CFR 1.28. On September 1, 1998, the Court of Appeals for the Federal Circuit held that 37 CFR 1.28(c) is the sole provision governing the time for correction of the erroneous payment of the issue fee as a small entity. **See DH Technology v. Synergystex International, Inc. 154 F.3d 1333, 47 USPQ2d 1865 (Fed. Cir. Sept. 1, 1998).**

The Office no longer investigates or rejects original or reissue applications under 37 CFR 1.56. **1098 Off. Gaz. Pat. Office 502 (January 3, 1989)**. Therefore, nothing in this Notice is intended to imply that an investigation was done.

Your fee deficiency submission under 37 CFR 1.28 is hereby **ACCEPTED**.

This application is no longer entitled to small entity status. Accordingly, all future fees paid in this application must be paid at the large entity rate.

Inquiries related to this communication should be directed to the undersigned at (571) 272-3222.

Kenya A. McLaughlin
Petitions Attorney
Office of Petitions

UNITED STATES PATENT AND TRADEMARK OFFICE

Commissioner for Patents
United States Patent and Trademark Office
P.O. Box 1450
Alexandria, VA 22313-1450
www.uspto.gov

BRIAN B DIEKHOFF
7733 FORSYTH 12TH FLOOR
ST LOUIS MO 63105

COPY MAILED
OCT 16 2006
OFFICE OF PETITIONS

In re Application of	:	
Kim Harvey	:	
Application No. 29/199,729	:	DECISION ON PETITION
Filed: February 19, 2004	:	
Attorney Docket No. 15119-505-46078	:	

This is a decision on the petition to withdraw the holding of abandonment under 37 CFR 1.181, filed July 31, 2006.

The petition is **GRANTED**.

The above-identified application was held abandoned for failure to timely file a response to the non-final Office action (a Restriction Requirement), mailed January 10, 2006. This Office action set a shortened statutory period for reply of one (1) month. The Office mailed a Notice of Abandonment on July 20, 2006.

A review of the application file reveals the presence of an Election, filed July 7, 2006, made timely by obtaining a five month extension of time. Accordingly, it is obvious that the Notice of Abandonment was mailed in error.

In view thereof, **the holding of abandonment is withdrawn**.

The Notice of Abandonment is hereby **VACATED**.

The matter is being forwarded to Group Art Unit 2914 for consideration of the reply (an Election) filed July 7, 2006 (made timely by obtaining a five month extension of time).

Telephone inquiries regarding this decision should be directed to the undersigned at (571)272-3207.

Cliff Congo
Petitions Attorney
Office of Petitions

UNITED STATES PATENT AND TRADEMARK OFFICE

Commissioner for Patents
United States Patent and Trademark Office
P.O. Box 1450
Alexandria, VA 22313-1450
www.uspto.gov

KIM HARVEY
9036 RIPON CT
INDIANAPOLIS IN 46268

COPY MAILED

SEP 22 2008

OFFICE OF PETITIONS

In re Application of	:	
Kim Harvey	:	
Application No. 29/199,729	:	ON PETITION
Filed: February 19, 2004	:	
Attorney Docket No. 15119-505-46078	:	

This is a decision on the letter filed August 15, 2008, which is being treated as a petition to withdraw the holding of abandonment.

The petition under 37 CFR 1.181 is **DISMISSED**.

Any request for reconsideration of this decision must be submitted within **TWO (2) MONTHS** from the mail date of this decision. The reconsideration request should include a cover letter entitled "Renewed Petition under 37 CFR 1.181". Extensions of time under 37 CFR 1.136(a) are permitted. No fee is required for a renewed petition.

The application was held abandoned due to failure to timely file corrected drawings in response to the Notice of Allowability mailed April 3, 2008. This Notice set a statutory period for reply of three (3) months. No corrected drawings having been received, the application became abandoned on July 4, 2008. The Office mailed a Notice of Abandonment on July 29, 2008.

Petitioner argues that the Examiner indicated to her to only send the issue fee. However, the Notice of Allowability was explicit in its requirement that corrected drawings were needed. As this was a statutory requirement, it could not be waived. There is no indication that the Office mailed a Supplemental Notice of Allowability, removing the requirement for corrected drawings.

While the instant petition does not merit withdrawing the holding of abandonment, petitioner may seek to revive the application pursuant to 37 CFR 1.137(a) or 37 CFR 1.137(b).

A grantable petition under 37 CFR 1.137(a) must be accompanied by: (1) the reply required to the outstanding Office action or notice, unless previously filed; (2) the petition fee set forth in 37 CFR 1.17(l); (3) a showing to the satisfaction of the Commissioner that the entire delay in filing the required reply from the due date for the reply until the filing of a grantable petition pursuant to this paragraph was unavoidable; and (4) any terminal disclaimer (and fee as set forth in 37 CFR 1.20(d)) required pursuant to 37 CFR 1.137(d).

A grantable petition pursuant to 37 CFR 1.137(b) must be accompanied by (1) The reply required to the outstanding Office action or notice, unless previously filed; (2) The petition fee as set forth in 37 CFR 1.17(m); and (3) A statement that the entire delay in filing the required reply from the due date for the reply until the filing of a grantable petition pursuant to this paragraph was unintentional.

Further correspondence with respect to this matter should be addressed as follows:

By mail: Mail Stop Petitions
Commissioner for Patents
P.O. Box 1450
Alexandria VA 22313-1450

By FAX: (571)273-8300
Attn: Office of Petitions

Telephone inquiries related to this decision should be directed to the undersigned at (571)272-3207.

Cliff Congo
Petitions Attorney
Office of Petitions

UNITED STATES PATENT AND TRADEMARK OFFICE

Commissioner for Patents
United States Patent and Trademark Office
P.O. Box 1450
Alexandria, VA 22313-1450
www.uspto.gov

COPY MAILED

JAN 05 2009

OFFICE OF PETITIONS

KIM HARVEY
9036 RIPON CT
INDIANAPOLIS IN 46268

In re Application of	:	
Kim Harvey	:	
Application No. 29/199,729	:	ON PETITION
Filed: February 19, 2004	:	
Attorney Docket No. 15119-505-46078	:	

This is a decision on the letter filed October 27, 2008, which is being treated as a renewed petition to withdraw the holding of abandonment.

The petition under 37 CFR 1.181 is **DISMISSED**.

Any request for reconsideration of this decision must be submitted within **TWO (2) MONTHS** from the mail date of this decision. The reconsideration request should include a cover letter entitled "Renewed Petition under 37 CFR 1.181". Extensions of time under 37 CFR 1.136(a) are permitted. No fee is required for a renewed petition.

The application was held abandoned due to failure to timely file corrected drawings in response to the Notice of Allowability mailed April 3, 2008. This Notice set a statutory period for reply of three (3) months. No corrected drawings having been received, the application became abandoned on July 4, 2008. The Office mailed a Notice of Abandonment on July 29, 2008.

Petitioner argues that the Examiner indicated to her to only send the issue fee. However, the Notice of Allowability was explicit in its requirement that corrected drawings were needed. As this was a statutory requirement, it could not be waived. There is no indication that the Office mailed a Supplemental Notice of Allowability, removing the requirement for corrected drawings.

Petitioner's arguments have been further considered, but are not deemed persuasive. While the instant petition does not merit withdrawing the holding of abandonment, petitioner is recommended to revive the application pursuant to 37 CFR 1.137(a).

A grantable petition under 37 CFR 1.137(a) must be accompanied by: (1) the reply required to the outstanding Office action or notice, unless previously filed; (2) the petition fee set forth in 37 CFR 1.17(l), (currently $270); (3) a showing to the satisfaction of the Commissioner that the entire delay in filing the required reply from the due date for the reply until the filing of a grantable petition pursuant to this paragraph was unavoidable; and (4) any terminal disclaimer (and fee as set forth in 37 CFR 1.20(d)) required pursuant to 37 CFR 1.137(d).

A blank form for a petition to revive under 37 CFR 1.137(a) is enclosed for petitioner's convenience.

Further correspondence with respect to this matter should be addressed as follows:

By mail: Mail Stop Petitions
Commissioner for Patents
P.O. Box 1450
Alexandria VA 22313-1450

By FAX: (571)273-8300
Attn: Office of Petitions

Telephone inquiries related to this decision should be directed to the undersigned at (571)272-3207.

Cliff Congo
Petitions Attorney
Office of Petitions

Enc: PTO/SB/61 (3 pages)
Privacy Act Statement (1 page)

PTO/SB/61 (11-08)
Approved for use through 12/31/2008. OMB 0651-0031
U.S. Patent and Trademark Office; U.S. DEPARTMENT OF COMMERCE
Under the Paperwork Reduction Act of 1995, no persons are required to respond to a collection of information unless it displays a valid OMB control number.

PETITION FOR REVIVAL OF AN APPLICATION FOR PATENT ABANDONED UNAVOIDABLY UNDER 37 CFR 1.137(a)	Docket Number (Optional)

First Named Inventor: _____ Art Unit: _____

Application Number: _____ Examiner: _____

Filed: _____

Title: _____

Attention: Office of Petitions
Mail Stop Petition
Commissioner for Patents
P.O. Box 1450
Alexandria, VA 22313-1450

NOTE: If information or assistance is needed in completing this form, please contact Petitions Information at (571) 272-3282.

The above-identified application became abandoned for failure to file a timely and proper reply to a notice or action by the United States Patent and Trademark Office. The date of abandonment is the day after the expiration date of the period set for reply in the Office notice or action plus any extensions of time actually obtained.

APPLICANT HEREBY PETITIONS FOR REVIVAL OF THIS APPLICATION.

NOTE: A grantable petition requires the following items:

(1) Petition fee.
(2) Reply and/or issue fee.
(3) Terminal disclaimer with disclaimer fee – required for all utility and plant applications filed before June 8, 1995, and for all design applications; and
(4) Adequate showing of the cause of unavoidable delay.

1. Petition fee

☐ Small entity – fee $_____ (37 CFR 1.17(l)). Applicant claims small entity status. See 37 CFR 1.27.

☐ Other than small entity – fee $_____ (37 CFR 1.17(l)).

2. Reply and/or fee

A The reply and/or fee to the above-noted Office action in the form of _____ (identify the type of reply):

☐ has been filed previously on _____ .

☐ is enclosed herewith.

B The issue fee of $ _____

☐ has been filed previously on _____ .

☐ is enclosed herewith.

This collection of information is required by 37 CFR 1.137(a). The information is required to obtain or retain a benefit by the public which is to file (and by the USPTO to process) an application. Confidentiality is governed by 35 U.S.C. 122 and 37 CFR 1.11 and 1.14. This collection is estimated to take 8 hours to complete, including gathering, preparing, and submitting the completed application form to the USPTO. Time will vary depending upon the individual case. Any comments on the amount of time you require to complete this form and/or suggestions for reducing this burden, should be sent to the Chief Information Officer, U.S. Patent and Trademark Office, U.S. Department of Commerce, P.O. Box 1450, Alexandria, VA 22313-1450. DO NOT SEND FEES OR COMPLETED FORMS TO THIS ADDRESS. **SEND TO: Mail Stop Petition, Commissioner for Patents, P.O. Box 1450, Alexandria, VA 22313-1450.**
If you need assistance in completing the form, call 1-800-PTO-9199 and select option 2.

Under the Paperwork Reduction Act of 1995, no persons are required to respond to a collection of information unless it displays a valid OMB control number.

PETITION FOR REVIVAL OF AN APPLICATION FOR PATENT ABANDONED UNAVOIDABLY UNDER 37 CFR 1.137(a)

3. Terminal disclaimer with disclaimer fee

☐ Since this utility/plant application was filed on or after June 8, 1995, no terminal disclaimer is required.

☐ A terminal disclaimer (and disclaimer fee (37 CFR 1.20(d)) of $ _____ for a small entity or $ _____ for other than a small entity) disclaiming the required period of time is enclosed herewith (see PTO/SB/63).

4. An adequate showing of the cause of the delay, and that the entire delay in filing the required reply from the due date for the reply until the filing of a grantable petition under 37 CFR 1.137(a) was unavoidable, is enclosed.

WARNING:

Petitioner/applicant is cautioned to avoid submitting personal information in documents filed in a patent application that may contribute to identity theft. Personal information such as social security numbers, bank account numbers, or credit card numbers (other than a check or credit card authorization form PTO-2038 submitted for payment purposes) is never required by the USPTO to support a petition or an application. If this type of personal information is included in documents submitted to the USPTO, petitioners/applicants should consider redacting such personal information from the documents before submitting them to the USPTO. Petitioner/applicant is advised that the record of a patent application is available to the public after publication of the application (unless a non-publication request in compliance with 37 CFR 1.213(a) is made in the application) or issuance of a patent. Furthermore, the record from an abandoned application may also be available to the public if the application is referenced in a published application or an issued patent (see 37 CFR 1.14). Checks and credit card authorization forms PTO-2038 submitted for payment purposes are not retained in the application file and therefore are not publicly available.

Signature	Date
Typed or printed name	Registration Number, if applicable
Address	Telephone Number
Address	

Enclosure
☐ Fee Payment
☐ Reply
☐ Terminal Disclaimer Form
☐ Additional sheets containing statements establishing unavoidable delay
☐ _____

CERTIFICATE OF MAILING OR TRANSMISSION (37 CFR 1.8(a))

I hereby certify that this correspondence is being:

☐ deposited with the United States Postal Service on the date shown below with sufficient postage as first class mail in an envelope addressed to **Mail Stop Petition**, Commissioner for Patents, P.O. Box 1450, Alexandria, VA 22313-1450.

☐ transmitted by facsimile on the date shown below to the United States Patent and Trademark Office at (571) 273-8300.

Date	Signature
	Typed or printed name of person signing certificate

Under the Paperwork Reduction Act of 1995, no persons are required to respond to a collection of information unless it displays a valid OMB control number.

PETITION FOR REVIVAL OF AN APPLICATION FOR PATENT ABANDONED UNAVOIDABLY UNDER 37 CFR 1.137(a)

NOTE: The following showing of the cause of unavoidable delay must be signed by all applicants or by any other party who is presenting statements concerning the cause of delay.

Signature	Date
Typed or printed name	Registration Number, if applicable

(In the space provided below, please explain in detail the reasons for the delay in filing a proper reply.)

(Please attach additional sheets if additional space is needed.)

Privacy Act Statement

The **Privacy Act of 1974 (P.L. 93-579)** requires that you be given certain information in connection with your submission of the attached form related to a patent application or patent. Accordingly, pursuant to the requirements of the Act, please be advised that: (1) the general authority for the collection of this information is 35 U.S.C. 2(b)(2); (2) furnishing of the information solicited is voluntary; and (3) the principal purpose for which the information is used by the U.S. Patent and Trademark Office is to process and/or examine your submission related to a patent application or patent. If you do not furnish the requested information, the U.S. Patent and Trademark Office may not be able to process and/or examine your submission, which may result in termination of proceedings or abandonment of the application or expiration of the patent.

The information provided by you in this form will be subject to the following routine uses:

1. The information on this form will be treated confidentially to the extent allowed under the Freedom of Information Act (5 U.S.C. 552) and the Privacy Act (5 U.S.C 552a). Records from this system of records may be disclosed to the Department of Justice to determine whether disclosure of these records is required by the Freedom of Information Act.
2. A record from this system of records may be disclosed, as a routine use, in the course of presenting evidence to a court, magistrate, or administrative tribunal, including disclosures to opposing counsel in the course of settlement negotiations.
3. A record in this system of records may be disclosed, as a routine use, to a Member of Congress submitting a request involving an individual, to whom the record pertains, when the individual has requested assistance from the Member with respect to the subject matter of the record.
4. A record in this system of records may be disclosed, as a routine use, to a contractor of the Agency having need for the information in order to perform a contract. Recipients of information shall be required to comply with the requirements of the Privacy Act of 1974, as amended, pursuant to 5 U.S.C. 552a(m).
5. A record related to an International Application filed under the Patent Cooperation Treaty in this system of records may be disclosed, as a routine use, to the International Bureau of the World Intellectual Property Organization, pursuant to the Patent Cooperation Treaty.
6. A record in this system of records may be disclosed, as a routine use, to another federal agency for purposes of National Security review (35 U.S.C. 181) and for review pursuant to the Atomic Energy Act (42 U.S.C. 218(c)).
7. A record from this system of records may be disclosed, as a routine use, to the Administrator, General Services, or his/her designee, during an inspection of records conducted by GSA as part of that agency's responsibility to recommend improvements in records management practices and programs, under authority of 44 U.S.C. 2904 and 2906. Such disclosure shall be made in accordance with the GSA regulations governing inspection of records for this purpose, and any other relevant (*i.e.*, GSA or Commerce) directive. Such disclosure shall not be used to make determinations about individuals.
8. A record from this system of records may be disclosed, as a routine use, to the public after either publication of the application pursuant to 35 U.S.C. 122(b) or issuance of a patent pursuant to 35 U.S.C. 151. Further, a record may be disclosed, subject to the limitations of 37 CFR 1.14, as a routine use, to the public if the record was filed in an application which became abandoned or in which the proceedings were terminated and which application is referenced by either a published application, an application open to public inspection or an issued patent.
9. A record from this system of records may be disclosed, as a routine use, to a Federal, State, or local law enforcement agency, if the USPTO becomes aware of a violation or potential violation of law or regulation.

UNITED STATES PATENT AND TRADEMARK OFFICE

Commissioner for Patents
United States Patent and Trademark Office
P.O. Box 1450
Alexandria, VA 22313-1450
www.uspto.gov

KIM HARVEY
9036 RIPON CT
INDIANAPOLIS IN 46268

COPY MAILED

MAR 0 2 2009

OFFICE OF PETITIONS

In re Application of	:	
Kim Harvey	:	
Application No. 29/199,729	:	ON PETITION
Filed: February 19, 2004	:	
Attorney Docket No. 15119-505-46078	:	

This is a decision on the petition to revive under 37 CFR 1.137(a), filed February 23, 2009.

The petition under 37 CFR 1.137(a) is **DISMISSED**.

Any request for reconsideration of this decision must be submitted within **TWO (2) MONTHS** from the mail date of this decision. The reconsideration request should include a cover letter entitled "Renewed Petition under 37 CFR 1.137(a)". Extensions of time under 37 CFR 1.136(a) are permitted. No additional petition fee is required for a renewed petition.

The application was held abandoned due to failure to timely file corrected drawings in response to the Notice of Allowability mailed April 3, 2008. This Notice set a statutory period for reply of three (3) months. No corrected drawings having been received, the application became abandoned on July 4, 2008. The Office mailed a Notice of Abandonment on July 29, 2008. Applicant filed a petition to withdraw the holding of abandonment on August 15, 2008 and October 27, 2008. However, the petitions were dismissed in decisions mailed on September 22, 2008 and January 5, 2009, respectively.

A grantable petition under 37 CFR 1.137(a) must be accompanied by: (1) the reply required to the outstanding Office action or notice, unless previously filed; (2) the petition fee set forth in 37 CFR 1.17(l), (currently $270); (3) a showing to the satisfaction of the Commissioner that the entire delay in filing the required reply from the due date for the reply until the filing of a grantable petition pursuant to this paragraph was unavoidable; and (4) any terminal disclaimer (and fee as set forth in 37 CFR 1.20(d)) required pursuant to 37 CFR 1.137(d).

The instant application is a design application, and as such, requires a terminal disclaimer. Petitioner submitted $65 for a terminal disclaimer; however, the fee for a terminal disclaimer is currently $70. Moreover, petitioner did not submit the terminal disclaimer form. Accordingly, on renewed petition, petitioner will need to complete the enclosed form, and submit the additional $5 for the terminal disclaimer fee.

Further correspondence with respect to this matter should be addressed as follows:

By mail: Mail Stop Petitions
Commissioner for Patents
P.O. Box 1450
Alexandria VA 22313-1450

By FAX: (571)273-8300
Attn: Office of Petitions

Telephone inquiries related to this decision should be directed to the undersigned at (571)272-3207.

Cliff Congo
Petitions Attorney
Office of Petitions

Enc: PTO/SB/63 (1 page)
Privacy Act Statement (1 page)

UNITED STATES PATENT AND TRADEMARK OFFICE

Commissioner for Patents
United States Patent and Trademark Office
P.O. Box 1450
Alexandria, VA 22313-1450
www.uspto.gov

KIM HARVEY
9036 RIPON CT
INDIANAPOLIS IN 46268

COPY MAILED

MAY 15 2009

OFFICE OF PETITIONS

In re Application of	:	
Kim Harvey	:	
Application No. 29/199,729	:	ON PETITION
Filed: February 19, 2004	:	
Attorney Docket No. 15119-505-46078	:	

This is a decision on the Terminal Disclaimer filed March 13, 2009, which is also being treated as a petition to revive under 37 CFR 1.137(a).

The petition under 37 CFR 1.137(a) is **GRANTED**.

The application was held abandoned due to failure to timely file corrected drawings in response to the Notice of Allowability mailed April 3, 2008. This Notice set a statutory period for reply of three (3) months. No corrected drawings having been received, the application became abandoned on July 4, 2008. The Office mailed a Notice of Abandonment on July 29, 2008. Applicant filed a petition to withdraw the holding of abandonment on August 15, 2008 and October 27, 2008. However, the petitions were dismissed in decisions mailed on September 22, 2008 and January 5, 2009, respectively. Applicant filed a petition to revive under 37 CFR 1.137(a) on February 23, 2009. However, the petition was dismissed in a decision mailed on March 2, 2009. The petition was dismissed because the Terminal Disclaimer submitted with the petition was $5 deficient (the terminal disclaimer fee was $70; applicant submitted $65).

With the instant petition, applicant has submitted the missing $5, and completed the Terminal Disclaimer form. The other requirements for a grantable petition under 37 CFR 1.137(a) have been previously satisfied.

The application is being forwarded to the Office of Data Management for processing into a patent.

Telephone inquiries related to this decision should be directed to the undersigned at (571)272-3207.

Cliff Congo
Petitions Attorney
Office of Petitions

UNITED STATES PATENT AND TRADEMARK OFFICE

Commissioner for Patents
United States Patent and Trademark Office
P.O. Box 1450
Alexandria, VA 22313-1450
www.uspto.gov

DONALD R SCHOONOVER
4211 ROLLING HILLS DRIVE
NIXA MO 65714-8771

COPY MAILED
AUG 24 2006
OFFICE OF PETITIONS

In re Application of	:	
Christopher Deblanco	:	
Application No. 29/199,740	:	DECISION ON PETITION
Filed: February 20, 2004	:	
Title: Child's Garage-Like	:	
Playhouse with Barn-Type Doors		

This is a decision on the petition to revive the above identified application under 37 CFR 1.137(b), filed February 6, 2006.

The petition is **GRANTED**.

The above-identified application became abandoned for failure to timely pay the issue fee and file drawings in response to the Notice of Allowance and Notice of Allowability, mailed July 26, 2005. These Notice set a statutory period for reply of three (3) months. No issue fee and drawings having been received, the application became abandoned on October 27, 2005. A Notice of Abandonment was mailed on December 7, 2005.

With the instant petition, petitioner submitted the issue fee and drawings, paid the petition fee, submitted a terminal disclaimer, and made the proper statement of unintentional delay.

The matter is being forwarded to the Office of Patent Publication for processing into a patent.

Telephone inquiries concerning this decision should be directed to the undersigned at 571-272-3207.

Cliff Congo
Petitions Attorney
Office of Petitions

UNITED STATES PATENT AND TRADEMARK OFFICE

COMMISSIONER FOR PATENTS
UNITED STATES PATENT AND TRADEMARK OFFICE
P.O. BOX 1450
ALEXANDRIA, VA 22313-1450
www.uspto.gov

MAR 0 1 2004

JEFFER, MANGELS, BUTLER & MARMARO, LLP
1900 AVENUE OF THE STARS, 7TH FLOOR
LOS ANGELES CA 90067

In re Application of	:	
Sean O'Shea et al	:	
Serial No.: 29/199,777	:	**REQUEST FOR EXPEDITED**
Filed: February 18, 2004	:	**EXAMINATION**
For: Footwear Outsole	:	

This is in response to the Request for expedited examination applicant filed February 18, 2004, to expedite the above-identified application under the provisions of 37 CFR 1.155.

Applicant has satisfied the provisions set forth in 37 CFR 1.155, thus the petition is **GRANTED**.

The application will be forwarded to the examiner for action on the merits commensurate with this decision.

Should there be any questions with regard to this letter please contact John Kittle by letter addressed to the Director, Technology Center 3700/2900, P.O. Box 1450 Alexandria, VA 22313-1450 or by telephone at (703)308-0873 or by facsimile transmission at (703)308-3139.

John E. Kittle

John E. Kittle
Director
Technology Center 3700/2900

UNITED STATES PATENT AND TRADEMARK OFFICE

Commissioner for Patents
United States Patent and Trademark Office
P.O. Box 1450
Alexandria, VA 22313-1450
www.uspto.gov

NIXON & VANDERHYE, PC
901 NORTH GLEBE ROAD, 11TH FLOOR
ARLINGTON, VA 22203

COPY MAILED
NOV 20 2006
OFFICE OF PETITIONS

In re Patent No. D501,207	:	
Issue Date: 01/25/2005	:	
Application No. 29/199,798	:	ON PETITION
Filing or 371(c) Date: 02/20/2004	:	
Title of Invention:	:	
INPUT/OUTPUT TERMINAL	:	
FOR A COMPUTER	:	

This is a decision on the "Petition for a Duplicate Letters Patent Under 37 CFR Section 1.182", filed August 8, 2006.

The petition is **GRANTED**.

The file record discloses that the instant application matured into U.S. Patent No. D501,207 on January 25, 2005. Petitioner, however, contends that the patent is irretrievably lost.

A copy of this decision is being forwarded to Publishing Division for issuance of a duplicate Letters Patent. The file is being forwarded to Files Repository.

Questions concerning this matter may be directed to the undersigned at 571-232-3232.

Derek L. Woods
Attorney
Office of Petitions

CC: Krystal Paige
South Tower 8th floor, Room C-32 (FAX 571-270-9937)

UNITED STATES PATENT AND TRADEMARK OFFICE

COMMISSIONER FOR PATENTS
UNITED STATES PATENT AND TRADEMARK OFFICE
P.O. BOX 1450
ALEXANDRIA, VA 22313-1450
www.uspto.gov

MAR 0 1 2004

BANNER & WITCOFF
1001 G STREET N W
SUITE 1100
WASHINGTON DC 20001

In re Application of	:	
Carl L. Madore	:	
Serial No.: 29/199,800	:	**REQUEST FOR EXPEDITED**
Filed: February 20, 2004	:	**EXAMINATION**
For: Golf Club Head	:	

This is in response to the Request for expedited examination applicant filed February 20, 2004, to expedite the above-identified application under the provisions of 37 CFR 1.155.

Applicant has satisfied the provisions set forth in 37 CFR 1.155, thus the petition is **GRANTED**.

The application will be forwarded to the examiner for action on the merits commensurate with this decision.

Should there be any questions with regard to this letter please contact John Kittle by letter addressed to the Director, Technology Center 3700/2900, P.O. Box 1450 Alexandria, VA 22313-1450 or by telephone at (703)308-0873 or by facsimile transmission at (703)308-3139.

John E. Kittle

John E. Kittle
Director
Technology Center 3700/2900

UNITED STATES PATENT AND TRADEMARK OFFICE

COMMISSIONER FOR PATENTS
UNITED STATES PATENT AND TRADEMARK OFFICE
P.O. BOX 1450
ALEXANDRIA, VA 22313-1450
www.uspto.gov

MAR 0 1 2004

BANNER & WITCOFF
1001 G STREET N W
SUITE 1100
WASHINGTON DC 20001

In re Application of	:	
Carl L. Madore	:	
Serial No.: 29/199,801	:	**REQUEST FOR EXPEDITED EXAMINATION**
Filed: February 20, 2004	:	
For: Portion of a Golf Club Head	:	

This is in response to the Request for expedited examination applicant filed February 20, 2004, to expedite the above-identified application under the provisions of 37 CFR 1.155.

Applicant has satisfied the provisions set forth in 37 CFR 1.155, thus the petition is **GRANTED**.

The application will be forwarded to the examiner for action on the merits commensurate with this decision.

Should there be any questions with regard to this letter please contact John Kittle by letter addressed to the Director, Technology Center 3700/2900, P.O. Box 1450 Alexandria, VA 22313-1450 or by telephone at (703)308-0873 or by facsimile transmission at (703)308-3139.

John E. Kittle

John E. Kittle
Director
Technology Center 3700/2900

UNITED STATES PATENT AND TRADEMARK OFFICE

COMMISSIONER FOR PATENTS
UNITED STATES PATENT AND TRADEMARK OFFICE
P.O. BOX 1450
ALEXANDRIA, VA 22313-1450
www.uspto.gov

MAR 01 2004

BANNER & WITCOFF
1001 G STREET N W
SUITE 1100
WASHINGTON DC 20001

In re Application of	:	
Carl L. Madore	:	
Serial No.: 29/199,802	:	**REQUEST FOR EXPEDITED EXAMINATION**
Filed: February 20, 2004	:	
For: Portion of a Golf Club Head	:	

This is in response to the Request for expedited examination applicant filed February 20, 2004, to expedite the above-identified application under the provisions of 37 CFR 1.155.

Applicant has satisfied the provisions set forth in 37 CFR 1.155, thus the petition is **GRANTED**.

The application will be forwarded to the examiner for action on the merits commensurate with this decision.

Should there be any questions with regard to this letter please contact John Kittle by letter addressed to the Director, Technology Center 3700/2900, P.O. Box 1450 Alexandria, VA 22313-1450 or by telephone at (703)308-0873 or by facsimile transmission at (703)308-3139.

John E. Kittle

John E. Kittle
Director
Technology Center 3700/2900

UNITED STATES PATENT AND TRADEMARK OFFICE

COMMISSIONER FOR PATENTS
UNITED STATES PATENT AND TRADEMARK OFFICE
P.O. BOX 1450
ALEXANDRIA, VA 22313-1450
www.uspto.gov

MAR 11 2004

BANNER & WITCOFF
1001 G STREET N W
SUITE 1100
WASHINGTON DC 20001

In re Application of	:	
Carl L. Madore	:	
Serial No.: 29/199,803	:	**REQUEST FOR EXPEDITED EXAMINATION**
Filed: February 20, 2004	:	
For: Portion of a Golf Club Head	:	

This is in response to the Request for expedited examination applicant filed February 20, 2004, to expedite the above-identified application under the provisions of 37 CFR 1.155.

Applicant has satisfied the provisions set forth in 37 CFR 1.155, thus the petition is **GRANTED**.

The application will be forwarded to the examiner for action on the merits commensurate with this decision.

Should there be any questions with regard to this letter please contact John Kittle by letter addressed to the Director, Technology Center 3700/2900, P.O. Box 1450 Alexandria, VA 22313-1450 or by telephone at (703)308-0873 or by facsimile transmission at (703)308-3139.

John E. Kittle

John E. Kittle
Director
Technology Center 3700/2900

UNITED STATES PATENT AND TRADEMARK OFFICE

COMMISSIONER FOR PATENTS
UNITED STATES PATENT AND TRADEMARK OFFICE
P.O. BOX 1450
ALEXANDRIA, VA 22313-1450
www.uspto.gov

MAR 0 1 2004

Coudert Brothers LLP
Attn: Lewis Reff
1114 Avenue of the Americas
New York NY 10036

In re Application of	:	
Park B. Smith	:	
Serial No.: 29/199,805	:	**REQUEST FOR EXPEDITED**
Filed: February 18, 2004	:	**EXAMINATION**
For: Raisable Panel		

This is in response to the Request for expedited examination applicant filed February 18, 2004, to expedite the above-identified application under the provisions of 37 CFR 1.155.

Applicant has satisfied the provisions set forth in 37 CFR 1.155, thus the petition is **GRANTED**.

The application will be forwarded to the examiner for action on the merits commensurate with this decision.

Should there be any questions with regard to this letter please contact John Kittle by letter addressed to the Director, Technology Center 3700/2900, P.O. Box 1450 Alexandria, VA 22313-1450 or by telephone at (703)308-0873 or by facsimile transmission at (703)308-3139.

John E. Kittle

John E. Kittle
Director
Technology Center 3700/2900

UNITED STATES PATENT AND TRADEMARK OFFICE

COMMISSIONER FOR PATENTS
UNITED STATES PATENT AND TRADEMARK OFFICE
P.O. BOX 1450
ALEXANDRIA, VA 22313-1450
www.uspto.gov

MAR 01 2004

Coudert Brothers LLP
Attn: Lewis Reff
1114 Avenue of the Americas
New York NY 10036

In re Application of	:	
Titus et al	:	
Serial No.: 29/199,807	:	**REQUEST FOR EXPEDITED EXAMINATION**
Filed: February 19, 2004	:	
For: Window Treatment Panel	:	

This is in response to the Request for expedited examination applicant filed February 19, 2004, to expedite the above-identified application under the provisions of 37 CFR 1.155.

Applicant has satisfied the provisions set forth in 37 CFR 1.155, thus the petition is **GRANTED**.

The application will be forwarded to the examiner for action on the merits commensurate with this decision.

Should there be any questions with regard to this letter please contact John Kittle by letter addressed to the Director, Technology Center 3700/2900, P.O. Box 1450 Alexandria, VA 22313-1450 or by telephone at (703)308-0873 or by facsimile transmission at (703)308-3139.

John E. Kittle

John E. Kittle
Director
Technology Center 3700/2900

UNITED STATES PATENT AND TRADEMARK OFFICE

Commissioner for Patents
United States Patent and Trademark Office
P.O. Box 1450
Alexandria, VA 22313-1450
www.uspto.gov

BINGHAM MCHALE LLP
2700 MARKET TOWER
10 WEST MARKET STREET
INDIANAPOLIS IN 46204-4900

COPY MAILED

NOV 0 3 2005

OFFICE OF PETITIONS

In re Application of	:	
Cowgill, Bruce H.	:	
Application No. 29/199,836	:	ON PETITION
Filed: February 19, 2004	:	
Attorney Docket No. 0389-43715	:	

This is a decision on the petition under 37 C.F.R. § 1.137(b), filed September 26, 2005, to revive the above-identified application.

The petition is **GRANTED.**

The petition satisfies the conditions for revival pursuant to the provisions of 37 CFR 1.137(b) in that (1) the reply in the form of formal drawings; (2) the petition fee; (3) the required statement of unintentional delay have been received; and (4) the terminal disclaimer and fee. Accordingly, the response has been accepted as having been unintentionally delayed.

The terminal disclaimer fee is $130.00, rather than $110.00. Accordingly, an additional $20.00 was charged to petitioner's deposit account as authorized.

This matter is being referred to the Publishing Division for processing into a patent.

Telephone inquiries regarding this decision should be directed to the undersigned at (571) 272-3282.

Liana Chase
Petitions Examiner
Office of Petitions

UNITED STATES PATENT AND TRADEMARK OFFICE

Commissioner for Patents
United States Patent and Trademark Office
P.O. Box 1450
Alexandria, VA 22313-1450
www.uspto.gov

MAY 04 2004

Larry F. Gitlin
RAPKIN, GITLIN & BEAUMONT
Suite 301
5855 Topanga Canyon Blvd.
Woodland Hills CA 91367

In re Application of	:	
Abbie Rapport	:	
Serial No.: 29/199,873	:	DECISION ON
Filed: February 23, 2004	:	PETITON TO MAKE SPECIAL
For: Bracelet	:	

This is in response to applicants' petition filed February 23, 2004, to make the above-identified application special under the provisions of 37 CFR 1.102(d), based on infringement.

Applicant has satisfied the provisions set forth in M.P.E.P. 708.02, II. Therefore the petition is **GRANTED**.

The application will be forwarded to the examiner for action on the merits commensurate with this decision.

Should there be any questions with regard to this letter please contact John Kittle by letter addressed to the Director, Technology Center 3700/2900, P.O. Box 1450 Alexandria, VA 22313-1450 or by telephone at (703) 308-0873 or by facsimile transmission at (703) 308-3139.

John E. Kittle

John E. Kittle
Director
Technology Center 3700/2900

UNITED STATES PATENT AND TRADEMARK OFFICE

Commissioner for Patents
United States Patent and Trademark Office
P.O. Box 1450
Alexandria, VA 22313-1450
www.uspto.gov

LERNER GREENBERG STEMER LLP
P.O. BOX 2480
HOLLYWOOD, FL 33022-2480

COPY MAILED
JUL 27 2006
OFFICE OF PETITIONS

In re Application of :
Norbert Scharte :
Application No. 29/199,876 : ON PETITION
Filed: February 20, 2004 :
Attorney Docket No. SCH-0940G :

This is a decision on the petition under 37 CFR 1.181, filed June 27, 2006, to withdraw the holding of abandonment.

The petition is **GRANTED**.

This application became abandoned for failure to timely file a proper reply to the non-final Office action mailed November 7, 2005, which set a one (1) month period for response. Accordingly, this application became abandoned on December 8, 2005. A Notice of Abandonment was mailed on June 13, 2006.

Petitioner asserts that a response to the November 7, 2005 Office action was submitted by facsimile on November 28, 2005. In support, petitioner has submitted a copy of the originally filed response. The response includes an executed Certificate of Facsimile Transmission under 37 CFR 1.8 dated November 28, 2005. Additionally, petitioner has submitted a copy of the "Transmission Report" that indicates transmission and receipt of the document on November 28, 2005. Furthermore, petitioner has submitted a statement under 37 CFR 1.8(b)(3) by Werner H. Stemer, the person who signed the Certificate of Facsimile Transmission.

Accordingly, the petition is granted and the holding of abandonment is withdrawn.

This application is being forwarded to Technology Center 2900, for review of the response, filed June 27, 2006 (originally filed November 28, 2005).

Telephone inquiries concerning this matter may be directed to the undersigned at (571) 272-3228.

Edward J. Tannouse
Petitions Attorney
Office of Petitions
Office of the Deputy Commissioner
for Patent Examination Policy

UNITED STATES PATENT AND TRADEMARK OFFICE

Commissioner for Patents
United States Patent and Trademark Office
P.O. Box 1450
Alexandria, VA 22313-1450
www.uspto.gov

MAY 04 2004

Larry F. Gitlin
RAPKIN, GITLIN & BEAUMONT
Suite 301
5855 Topanga Canyon Blvd.
Woodland Hills CA 91367

In re Application of	:	
Abbie Rapport	:	
Serial No.: 29/199,886	:	DECISION ON
Filed: February 23, 2004	:	PETITON TO MAKE SPECIAL
For: Bracelet	:	

This is in response to applicants' petition filed February 23, 2004, to make the above-identified application special under the provisions of 37 CFR 1.102(d), based on infringement.

Applicant has satisfied the provisions set forth in M.P.E.P. 708.02, II. Therefore the petition is **GRANTED**.

The application will be forwarded to the examiner for action on the merits commensurate with this decision.

Should there be any questions with regard to this letter please contact John Kittle by letter addressed to the Director, Technology Center 3700/2900, P.O. Box 1450 Alexandria, VA 22313-1450 or by telephone at (703) 308-0873 or by facsimile transmission at (703) 308-3139.

John E. Kittle

John E. Kittle
Director
Technology Center 3700/2900

UNITED STATES PATENT AND TRADEMARK OFFICE

Commissioner for Patents
United States Patent and Trademark Office
P.O. Box 1450
Alexandria, VA 22313-1450
www.uspto.gov

MAY 0 4 2004

Larry F. Gitlin
RAPKIN, GITLIN & BEAUMONT
Suite 301
5855 Topanga Canyon Blvd.
Woodland Hills CA 91367

In re Application of	:	
Abbie Rapport	:	
Serial No.: 29/199,887	:	DECISION ON
Filed: February 23, 2004	:	PETITON TO MAKE SPECIAL
For: Bracelet	:	

This is in response to applicants' petition filed February 23, 2004, to make the above-identified application special under the provisions of 37 CFR 1.102(d), based on infringement.

Applicant has satisfied the provisions set forth in M.P.E.P. 708.02, II. Therefore the petition is **GRANTED**.

The application will be forwarded to the examiner for action on the merits commensurate with this decision.

Should there be any questions with regard to this letter please contact John Kittle by letter addressed to the Director, Technology Center 3700/2900, P.O. Box 1450 Alexandria, VA 22313-1450 or by telephone at (703) 308-0873 or by facsimile transmission at (703) 308-3139.

John E. Kittle

John E. Kittle
Director
Technology Center 3700/2900

UNITED STATES PATENT AND TRADEMARK OFFICE

COMMISSIONER FOR PATENTS
UNITED STATES PATENT AND TRADEMARK OFFICE
P.O. BOX 1450
ALEXANDRIA, VA 22313-1450
www.uspto.gov

ALSTON & BIRD LLP
BANK OF AMERICA PLAZA
101 SOUTH TRYON STREET, SUITE 4000
CHARLOTTE, NC 28280-4000

COPY MAILED

MAY 06 2008

OFFICE OF PETITIONS

In re Application of
Kentaro Yammoto
Application No. 29/199,929
Filed: February 19, 2004
Attorney Docket No. 114218-034

ON PETITION

This is a decision on the petition under 37 CFR 1.137(b), filed February 6, 2008, to revive the above-identified design application.

The petition is **DISMISSED**.

Any request for reconsideration of this decision must be submitted within TWO (2) MONTHS from the mail date of this decision. Extensions of time under 37 CFR 1.136(a) are permitted. The reconsideration request should include a cover letter entitled "Renewed Petition under 37 CFR 1.137(b)." This is **not** a final agency action within the meaning of 5 U.S.C. ' 704.

The application became abandoned for failure s to timely pay the issue and publication fees on or before July 6, 2005, as required by the Notice of Allowance and Fee(s) Due, mailed April 6, 2005, which set a statutory period for reply of three (3) months. A Notice of Abandonment was mailed on October 12, 2005. On February 6, 2008, the present petition was filed.

A grantable petition under 37 CFR 1.137(b) must be accompanied by: (1) the required reply, unless previously filed; (2) the petition fee as set forth in 37 CFR 1.17(m); (3) a statement that the entire delay in filing the required reply from the due date for the reply until the filing of a grantable petition pursuant to 37 CFR 1.137(b) was unintentional; and (4) any terminal disclaimer (and fee as set forth in 37 CFR 1.20(d)) required by 37 CFR 1.137(c). Where there is a question as to whether either the abandonment or the delay in filing a petition under 37 CFR 1.137 was unintentional, the Director may require additional information. See MPEP 711.03(c)(II)(C) and (D).

The petition lacks item 1. In an application or patent, abandoned or lapsed for failure to pay the issue fee or any portion thereof, the required reply must be the payment of the issue fee or any outstanding balance thereof. Accordingly, the application cannot be revived until a proper response to the Notice of Allowance mailed October 12, 2005 is filed.

Further correspondence with respect to this matter should be addressed as follows:

By mail: Mail Stop PETITION
Commissioner for Patents
Post Office Box 1450
Alexandria, VA 22313-1450

By hand: U.S. Patent and Trademark Office
Customer Service Window, Mail Stop PETITION
Randolph Building
401 Dulany Street
Alexandria, VA 22314

The centralized facsimile number is **(571) 273-8300**.

Any questions concerning this matter may be directed to the undersigned at (571) 272-3204.

Sherry D. Brinkley
Petitions Examiner
Office of Petitions

UNITED STATES PATENT AND TRADEMARK OFFICE

Commissioner for Patents
United States Patent and Trademark Office
P.O. Box 1450
Alexandria, VA 22313-1450
www.uspto.gov

ALSTON & BIRD LLP
BANK OF AMERICA PLAZA
101 SOUTH TRYON STREET, SUITE 4000
CHARLOTTE, NC 28280-4000

COPY MAILED

AUG 05 2008

OFFICE OF PETITIONS

In re Application of
Kentaro Yammoto
Application No. 29/199,929
Filed: February 19, 2004
Attorney Docket No. 114218-034

ON PETITION

This is a decision on the renewed petition under 37 CFR 1.137(b), filed May 14, 2008, to revive the above-identified design application.

The petition is **GRANTED**.

The application became abandoned for failure to timely pay the issue fee on or before July 6, 2005, as required by the Notice of Allowance and Fee(s) Due mailed April 6, 2005. A Notice of Abandonment was mailed on October 12, 2005. On February 6, 2008, a petition under 37 CFR 1.137(b) was filed; however, the petition was dismissed in a decision mailed May 6, 2008. On May 14, 2008, the present petition was filed.

The above-identified application has been abandoned for an extended period of time. The U.S. Patent and Trademark Office is relying on petitioner's duty of candor and good faith and accepting the statement that "the entire delay in filing the required reply from the due date for the reply until the filing of a grantable petition pursuant to 37 CFR 1.137(b) was unintentional." *See* Changes to Patent Practice and Procedure, 62 Fed. Reg. at 53160 and 53178; 1203 Off. Gaz. Pat. Office at 88 and 103 (responses to comments 64 and 109) (applicant obligated under 37 CFR 10.18 to inquire into the underlying facts and circumstances when providing the statement required by 37 CFR 1.137(b) to the Patent and Trademark Office).

Accordingly, the petition now satisfies the requirements of 37 CFR 1.137(b) in that petitioner has supplied (1) the reply in the form of the $810 issue fee, (2) the petition fee of $1,540, (3) an adequate statement of unintentional delay, and (4) a terminal disclaimer and fee as required by 37 CFR 1.137(d). Accordingly, the failure to timely pay the issue fee as required by the Notice of March 23, 2007 is accepted as being unintentionally delayed.

The terminal disclaimer filed February 6, 2008 is accepted and has been made of record. Any continuing application filed from this application must contain a copy of the terminal disclaimer. The copy of the terminal disclaimer must be filed with a cover letter requesting the terminal disclaimer be recorded on the continuing application. A copy of this decision should be attached to the cover letter.

The application is being referred to the Office of Data Management to be processed into a patent.

Telephone inquires related to this decision should be directed to the undersigned at (571) 272-3204. Telephone inquiries related to processing as a patent should be directed to (571) 272-4200.

Sherry D. Brinkley
Petitions Examiner
Office of Petitions

UNITED STATES PATENT AND TRADEMARK OFFICE

Commissioner for Patents
United States Patent and Trademark Office
P.O. Box 1450
Alexandria, VA 22313-1450
www.uspto.gov

SHARON R. KANTOR
C/O: INSOUND MEDICAL, INC.
37500 CENTRAL COURT
NEWARK, CA 94560

COPY MAILED

JAN 2 5 2006

OFFICE OF PETITIONS

In re Application of	:	
Shennib et al.	:	
Application No. 29/199,934	:	ON PETITION
Filed: February 19, 2004	:	
Attorney Docket No. 022176-002500US	:	

This is a decision on the petition under 37 C.F.R. § 1.137(b), filed November 30, 2005, to revive the above-identified application.

The petition is **DISMISSED**.

Any request for reconsideration must be submitted within TWO (2) MONTHS from the mail date of this decision. No further petition fee is required for the request. Extensions of time under 37 CFR 1.136(a) are permitted. The reconsideration request should include a cover letter entitled "Renewed Petition under 37 CFR 1.137(b)." This is **not** a final agency action within the meaning of 5 U.S.C. § 704.

This application became abandoned for failure to timely reply to the non-final Office action mailed March 22, 2005. No extensions of time under the provisions of 37 CFR 1.136(a) were obtained. Accordingly, this application became abandoned on June 23, 2005. A Notice of Abandonment was mailed November 18, 2005.

A grantable petition under 37 CFR 1.137(b) must be accompanied by:
(1) the required reply,[1]
(2) the petition fee,
(3) a statement that the entire delay in filing the required reply from the due date for the reply until the filing of a grantable petition pursuant to 37 CFR 1.137(b) was unintentional, and
(4) a terminal disclaimer and fee if the application was filed on or before June 8, 1995 or if the application is a design application.

Where there is a question as to whether either the abandonment or the delay in filing a petition under 37 CFR 1.137 was unintentional, the Commissioner may require additional information.[2]

---

[1] In a nonprovisional application abandoned for failure to prosecute, the required reply may be met by the filing of a continuing application. In an application or patent, abandoned or lapsed for failure to pay the issue fee or any portion thereof, the required reply must be the payment of the issue fee or any outstanding balance thereof.

[2] See MPEP 711.03(c)(III)(C) and (D).

The instant petition lacks items (1) and (4).

As to item (1), the required reply has not been submitted. Petitioner stated that the Office action was never received. A copy is enclosed for petitioner's convenience.

As to item (4), due to the instant application being a design application, a terminal disclaimer and requisite fee must also be submitted. A blank terminal disclaimer is enclosed for petitioner's convenience.

The file does not indicate a change of address has been submitted, although the address given on the petition differs from the address of record. If appropriate, a request to change the address of record should be filed. A courtesy copy of this decision is being mailed to the address given on the petition; however, the Office will mail all future correspondence solely to the address of record.

Further correspondence with respect to this matter should be addressed as follows:

By mail: Mail Stop PETITIONS
Commissioner for Patents
Post Office Box 1450
Alexandria, VA 22313-1450

By hand: Customer Window located at:

U.S. Patent and Trademark Office
Customer Service Window Randolph Building
401 Dulany Street
Alexandria, VA 22314

By fax: (571) 273-8300
ATTN: Office of Petitions

Any questions concerning this matter may be directed to the undersigned at (571) 272-3206.

Liana Chase
Petitions Examiner
Office of Petitions

Enclosures: PTO/SB/62 – Terminal Disclaimer
Copy of Office action previously mailed on 03/22/05

Cc: TOWNSEND AND TOWNSEND AND CREW LLP
TWO EMBARCADERO CENTER
EIGHTH FLOOR
SAN FRANCISCO, CA 94111-3834

UNITED STATES PATENT AND TRADEMARK OFFICE

Commissioner for Patents
United States Patent and Trademark Office
P.O. Box 1450
Alexandria, VA 22313-1450
www.uspto.gov

TOWNSEND AND TOWNSEND AND CREW, LLP
TWO EMBARCADERO CENTER
EIGHTH FLOOR
SAN FRANCISCO CA 94111-3834

COPY MAILED

MAR 2 3 2006

OFFICE OF PETITIONS

In re Application of	:	
Shennib et al.	:	
Application No. 29/199,934	:	ON PETITION
Filed: February 19, 2004	:	
Attorney Docket No. 022176-002500US	:	

This is a decision on the renewed petition under 37 C.F.R. § 1.137(b), filed March 6, 2006, to revive the above-identified application.

The petition is **GRANTED.**

The petition satisfies the conditions for revival pursuant to the provisions of 37 CFR 1.137(b) in that (1) the reply in the form of an Amendment; (2) the petition fee; (3) the required statement of unintentional delay have been received; and (4) the terminal disclaimer. Accordingly, the response has been accepted as having been unintentionally delayed.

This matter is being referred to Technology Center 2914 for further examination on the merits.

Telephone inquiries regarding this decision should be directed to the undersigned at (571) 272-3282.

Liana Chase
Petitions Examiner
Office of Petitions

UNITED STATES PATENT AND TRADEMARK OFFICE

Commissioner for Patents
United States Patent and Trademark Office
P.O. Box 1450
Alexandria, VA 22313-1450
www.uspto.gov

TOWNSEND AND TOWNSEND AND CREW, LLP
TWO EMBARCADERO CENTER
EIGHTH FLOOR
SAN FRANCISCO CA 94111-3834

COPY MAILED

NOV 17 2006

OFFICE OF PETITIONS

In re Application of	:	
Shennib et al.	:	
Application No. 29/199,934	:	ON PETITION
Filed: February 19, 2004	:	
Attorney Docket No. ISM-D025	:	

This is a decision on the petition under 37 C.F.R. § 1.137(b), filed October 24, 2006, to revive the above-identified application.

The petition is **GRANTED.**

This matter is being referred to the Publishing Division for processing into a patent.

Telephone inquiries regarding this decision should be directed to the undersigned at (571) 272-3206.

Liana Walsh

Liana Chase Walsh
Petitions Examiner
Office of Petitions

SPE RESPONSE FOR CERTIFICATE OF CORRECTION

29/199971

Paper No.:20060905

DATE : September 5, 2006

TO SPE OF : ART UNIT 2913

SUBJECT : Request for Certificate of Correction on Patent No.: 1/4/2006

A response is requested with respect to the accompanying request for a certificate of correction.

Please complete this form and return with file, within **7** days to:
Certificates of Correction Branch - PK 3-910
Palm location **7590** - Tel. No. 305-8201

With respect to the change(s) requested, correcting Office and/or Applicant's errors, should the patent read as shown in the certificate of correction? No new matter should be introduced, nor should the scope or meaning of the claims be changed.

Valerie Jackson

Thank You For Your Assistance **Certificates of Correction Branch**

The request for issuing the above-identified correction(s) is hereby:
Note your decision on the appropriate box.

☒ **Approved** **All** changes apply.

☐ **Approved in Part** Specify below which changes **do not** apply.

☐ **Denied** State the reasons for denial below.

Comments:

Add third inventor: David M. Privett
Parker, CO.

Caron D Veynar

SPE: Caron D. Veynar **Art Unit** 2913

UNITED STATES PATENT AND TRADEMARK OFFICE

Commissioner for Patents
United States Patent and Trademark Office
P.O. Box 1450
Alexandria, VA 22313-1450
www.uspto.gov

PATENT LAW OFFICES
JOSEPH R. BIRKNER M E
4 EARLEY ROAD
PEABODY, MA 01960-1218

COPY MAILED

MAR 27 2006

OFFICE OF PETITIONS

In re Application of

Pimental, et al.

Application No. 29/200,028

Filed: February 23, 2004

Attorney Docket No. PIMED-41

DECISION ON PETITION

This is a decision on the petition under 37 CFR §1.137(b), February 9, 2006, to revive the above-identified application.

The petition is **dismissed**.

Any request for reconsideration of this decision must be submitted within TWO (2) MONTHS from the mail date of this decision. Extensions of time under 37 CFR 1.136(a) are permitted. The reconsideration request should include a cover letter entitled "Renewed Petition" under 37 CFR 1.137(b)."

This application became abandoned for failure to respond in a timely manner to the Notice of Allowance and Issue Fee Due mailed July 26, 2005. The notice allowed a statutory period for reply of three months from its mailing date. No reply was received within the allowable period, and the application became abandoned on October 27, 2005. A Notice of Abandonment was mailed on December 13, 2005.

Effective December 1, 1997, the provisions of 37 CFR 1.137(b) now provide that where the delay in reply was unintentional, a petition may be filed to revive an abandoned application or a lapsed patent pursuant to 37 CFR 1.137(b). A grantable petition pursuant to 37 CFR 1.137(b) must be accompanied by:

(1) the required reply, unless previously filed. In a non-provisional application abandoned for failure to prosecute, the required reply may be met by the filing of a continuing application. In an application or patent, abandoned or lapsed for failure to pay the issue fee, or any portion thereof, the required reply must be the payment of the issue fee or any outstanding balance thereof.

(2) the petition fee as set forth in 37 CFR 1.17(m);

(3) a statement that the entire delay in filing the required reply from the due date for the reply until the filing of a grantable petition pursuant to 37 CFR 1.137(b) was unintentional. The Commissioner may require additional information where there is a question whether the delay was unintentional; and

(4) any terminal disclaimer (and fee set forth in 37 CFR 1.20(d)) required pursuant to 37 CFR 1.137(d).

The instant petition does not satisfy the requirements of item (4) above.

As to item (4), the terminal disclaimer was not found with the petition papers. The subject application is a design application, therefore; a terminal disclaimer is required in order to revive the application. Any renewed petition filed must be accompanied by the completed terminal disclaimer form, which is enclosed for petitioner's convenience. Pursuant to 37 CFR 1.137(d), the terminal disclaimer must dedicate to the public a terminal part of the term of any patent granted from this application that is equivalent to the period of abandonment of the application.

Further correspondence with respect to this matter should be addressed as follows:

By mail: Mail Stop Petitions
Commissioner for Patents
United States Patent and Trademark Office
Box 1450
Alexandria, VA 22313-1450

By facsimile: (571) 273-8300

Telephone inquiries concerning this matter may be directed to the undersigned at (571) 272-3222.

Kenya A. McLaughlin

Kenya A. McLaughlin
Petitions Attorney
Office of Petitions

UNITED STATES PATENT AND TRADEMARK OFFICE

Commissioner for Patents
United States Patent and Trademark Office
P.O. Box 1450
Alexandria, VA 22313-1450
www.uspto.gov

COPY MAILED

MAY 10 2006

OFFICE OF PETITIONS

PATENT LAW OFFICES
JOSEPH R BIRKNER M E
4 EARLEY ROAD
PEABODY, MA 01960-1218

In re Application of:
Pimental, et al.
Application No. 29/200,028
Filed: February 23, 2004
Attorney Docket No. PIMED-41

DECISION ON PETITION

This is a decision on the renewed petition under 37 CFR §1.137(b), April 18, 2006, to revive the above-identified application.

The renewed petition is **granted.**

This application became abandoned for failure to timely remit the issue fee of $400.00 as required by the Notice of Allowance and Issue Fee Due (the "Notice") mailed July 26, 2005. The Notice set forth a three (3) month statutory period for reply. Accordingly, this application became abandoned on October 27, 2005. A petition under 37 CFR 1.137(b) was filed on February 9, 2006, and dismissed by a decision mailed March 27, 2006.

The issue fee was received on February 9, 2006. The terminal disclaimer filed April 18, 2006, is also noted.

The application is being forwarded to the Office of Patent Publications for processing into a patent.

Telephone inquiries concerning this matter may be directed to the undersigned at (571) 272-3222.

Kenya A. McLaughlin

Kenya A. McLaughlin
Petitions Attorney
Office of Petitions

UNITED STATES PATENT AND TRADEMARK OFFICE

Commissioner for Patents
United States Patent and Trademark Office
P.O. Box 1450
Alexandria, VA 22313-1450
www.uspto.gov

D. PETER HOCHBERG
1940 E. 6TH STREET – 6TH FLOOR
CLEVELAND, OH 44114

COPY MAILED

APR 14 2004

OFFICE OF PETITIONS

In re Application of	:	
Elaine Darling	:	
Application No. 29/200,097	:	NOTICE
Filed: February 24, 2004	:	
Attorney Docket No.		

This is a notice regarding your request for acceptance of a fee deficiency submission under 37 CFR 1.28. On September 1, 1998, the Court of Appeals for the Federal Circuit held that 37 CFR 1.28(c) is the sole provision governing the time for correction of the erroneous payment of the issue fee as a small entity. **See DH Technology v. Synergystex International, Inc. 154 F.3d 1333, 47 USPQ2d 1865 (Fed. Cir. Sept. 1, 1998).**

The Office no longer investigates or rejects original or reissue applications under 37 CFR 1.56. **1098 Off. Gaz. Pat. Office 502 (January 3, 1989)**. Therefore, nothing in this Notice is intended to imply that an investigation was done.

Your fee deficiency submission under 37 CFR 1.28 is hereby **ACCEPTED**.

Inquiries related to this communication should be directed to the Office of Petitions Staff at (703) 305-9285.

This file is being forwarded to the Initial Patent Examination Unit.

Irvin Dingle
Petitions Examiner
Office of Petitions
Office of the Deputy Commissioner
for Patent Examination Policy

UNITED STATES PATENT AND TRADEMARK OFFICE

Commissioner for Patents
United States Patent and Trademark Office
P.O. Box 1450
Alexandria, VA 22313-1450
www.uspto.gov

Birch Stewart Kolasch & Birch
PO Box 747
Falls Church, VA 22040-0747

COPY MAILED

DEC 28 2004

OFFICE OF PETITIONS

In re Application of	:	
Kondo et al.	:	DECISION GRANTING PETITION
Application No. 29/200,131	:	
Filed: February 25, 2004	:	
Attorney Docket No. 0033-0920P	:	

This is a decision on the petition filed December 3, 2004, requesting that the above-identified application be accorded a filing date of February 25, 2004.

On February 25, 2004, applicants deposited the above-identified application. On October 4, 2004, the Office of Initial Patent Examination mailed a "Notice Of Incomplete Nonprovisional Application," indicating that the specification did not include at least one claim, and stating that the filing date would be the date of receipt of a complete specification. Additionally, the Notice stated the oath or declaration appeared to have been omitted.

In response, on December 3, 2004, applicants filed the present petition, 1 page of specification including a claim, an executed declaration, a preliminary amendment, and an amendment to the specification. Additionally, applicants submitted a copy of a date-stamped postcard receipt, acknowledging receipt of, *inter alia*, a combined declaration and power of attorney and a specification on February 25, 2004.

Upon review of the record, a specification with 1 claim and a complete declaration have not been located among the application papers. However, the evidence is convincing that the application papers deposited on February 25, 2004, included a specification with a claim and a complete declaration, which were subsequently misplaced in the United States Patent and Trademark Office.

Therefore, the application, including 1 page of specification with a claim and a complete declaration, was complete on filing and will be granted a filing date of February 25, 2004.

Accordingly, the petition is granted. The Notice of Incomplete was sent in error and is hereby vacated. The $400.00 petition fee is unnecessary and will be refunded to Deposit Account No. 02-2448.[1]

The Office of Initial Patent Examination is directed to process the above-identified application with a **filing date of February 25, 2004**, using the specification and executed declaration submitted on December 3, 2004, and to mail a corrected filing receipt.

Any inquiries related to this decision should be directed to the undersigned at (571) 272-3211.

Christina Tartera Donnell

Christina Tartera Donnell
Senior Petitions Attorney
Office of Petitions

[1] The Office finance records indicate that applicants submitted $130.00 for the petition fee on December 3, 2004. However, the current fee for the petition is $400.00. The Office charged applicants' Deposit Account the difference of $270.00 on December 3, 2004.

UNITED STATES PATENT AND TRADEMARK OFFICE

Commissioner for Patents
United States Patent and Trademark Office
P.O. Box 1450
Alexandria, VA 22313-1450
www.uspto.gov

Chiara F. Orsini, Esquire
Meyer Unkovic & Scott LLP
1300 Oliver Building
Pittsburgh, PA 15222

COPY MAILED

MAR 16 2006

OFFICE OF PETITIONS

In re Application of

Crunick, et al.

Application No. 29/200,155

Filed: February 23, 2004

Attorney Docket No. 275286.102

DECISION ON PETITION

This is a decision on the petition to withdraw the holding of abandonment under 37 CFR 1.181(a), filed February 15, 2006.

The petition is **granted**.

This application was held abandoned on September 30, 2005, after no reply was received to the Office communication mailed August 29, 2005. The notice set forth a shortened period for reply of one month from its mailing date. A Notice of Abandonment was mailed January 24, 2006. The instant petition was filed on February 15, 2006. Petitioner maintains that the notice of August 29, 2005, was never received and provides a copy of the relevant docketing calendar as proof of the same.

Section 711.03(c)(II) of the *Manual of Patent Examining Procedure* ("MPEP") provides that in order to establish non-receipt of an Office action so as prove that the imposition of a holding of abandonment is improper, petitioner must: 1) provide a statement to the Office indicating that the Office action was not received by petitioner; 2) include in the statement an attestation to the fact that a review of the file jacket and docket records maintained by petitioner indicates that the Office action was not received; and 3) provide a copy of the docket record where the non-received Office communication would have been entered had it been received and docketed.

Petitioner has met the burden of proof as established by Section 711.03(c)(II) of the MPEP. The holding of abandonment is, therefore, withdrawn.

The application file is being forwarded to Technology Center 2900, GAU 2916 for further processing.

Questions concerning this decision should be directed to the undersigned at (571) 272-3222.

Kenya A. McLaughlin
Petitions Attorney
Office of Petitions

SPE RESPONSE FOR CERTIFICATE OF CORRECTION

Paper No.: _____

DATE : Jan. 20, 2006

TO SPE OF : ART UNIT 2912 (*Stella Reid*)

SUBJECT : Request for Certificate of Correction on Patent No.: D,510,754

A response is requested with respect to the accompanying request for a certificate of correction.

Please complete this form and return with file, within 7 days to:
Palm location **7580, Certificates of Correction Branch – South Tower – 9A22**
If response is for an IFW, **return to employee (named below) via PUBSCofC Team in MADRAS.**
With respect to the change(s) requested, correcting Office and/or Applicant's errors, should the patent read as shown in the certificate of correction (COCIN)? No new matter should be introduced, nor should the scope or meaning of the claims be changed.
Please see the photos – drawings, and Request for Corrected Patent. Your denial or approval decision is needed b low.

sp STM STM/ Power

Thank You For Your Assistance

Certificates of Correction Branch
Tel. No. 703-308-9390 x120

The request for issuing the above-identified correction(s) is hereby:
Note your decision on the appropriate box.

- ☑ **Approved** — **All** changes apply.
- ☐ **Approved in Part** — Specify below which changes **do not** apply.
- ☐ **Denied** — State the reasons for denial below.

Comments:

_____

_____

_____

_____

_____

_____ **SPE**

2912 **Art Unit**

UNITED STATES PATENT AND TRADEMARK OFFICE

Commissioner for Patents
United States Patent and Trademark Office
P.O. Box 1450
Alexandria, VA 22313-1450
www.uspto.gov

Mathew E. Corr
BOYLE, FREDRICKSON, NEWHOLM,
STEIN & GRATZ, S.C.
250 Plaza, Suite 1030
250 East Wisconsin Avenue
Milwaukee, WI 53202

COPY MAILED

SEP 25 2006

OFFICE OF PETITIONS

In re Application of Kulig, et al. Application No. 29/200,369 Filed: February 26, 2004 Attorney Docket No. 893.018	: : : :	ON PETITION

This is a decision on the "Petition under 37 CFR 1.182 for Entry of the Correct Drawings" filed August 3, 2005.

The petition is **granted.**

The subject application was filed on February 26, 2004, with several other applications covering similar inventions, but with distinct set of drawings. Of particular interest relative to this petition is application 29/200,365. The instant petition has been filed to correct an alleged scanning error by the USPTO. Petitioner alleges that the drawings for application 29/200,365 were incorrectly scanned into application 29/200,369. The instant petition requests that the copy of the drawings, as filed with the instant petition, be scanned into the application 29/200,369 and accorded a filing date of February 26, 2004.

The evidencing is convincing that the Office erred in scanning the drawings meant for application 29/200,365 into application 29/200,369. Accordingly, the copy of the drawings as filed with instant petition and as identified, as the drawings for application 29/200,369 will be scanned into application 29/200,369 and accorded a filing date of February 26, 2004.

The application file is being directed to Technology Center 2900, GAU 2914 for further processing.

Telephone inquiries concerning this matter may be directed to the undersigned at (571) 272-3222.

Kenya A. McLaughlin

Kenya A. McLaughlin
Petitions Attorney
Office of Petitions

UNITED STATES PATENT AND TRADEMARK OFFICE

OFFICE

SERIAL NUMBER	FILING DATE	FIRST NAMED APPLICANT	ATTORNEY DOCKET NO.
29/200388	02/27/04	SANDERS, PATRICIA J.	CIL2195

ASHKAN NAJAFI, P.A.
6817 SOUTHPOINT PARKWAY
SUITE 2301
JACKSONVILLE FL 32216

EXAMINER	
TABOR, LAVONE	
ART UNIT	PAPER NUMBER
2911	

DATE MAILED: 8/9/07

NOTICE OF RESCINDED ABANDONMENT

☐ **In response to your communication filed** 4/26/07

☒ **Through inadvertence, a Notice of Abandonment was mailed in the above-identified application. The Notice of Abandonment is hereby rescinded.**

FOR Manager, Publications Division
Office of Patent Publication
571-272-4200

UNITED STATES PATENT AND TRADEMARK OFFICE

Commissioner for Patents
United States Patent and Trademark Office
P.O. Box 1450
Alexandria, VA 22313-1450
www.uspto.gov

OCT 19 2004

BANNER & WITCOFF, LTD
ELEVENTH FLOOR
1001 G STREET, N.W.
WASHINGTON, D.C. 20001-4597

In re Application of	:	
Marc A. Newson	:	
Serial No.: 29/200,419	:	DECISION ON PETITION
Filed: February 27, 2004	:	
For: Portion of a Shoe Upper	:	

This is in response to the petition applicant filed on June 22, 2004 to make the above-identified application special under the provisions of 37 CFR 1.102(d).

Applicant has satisfied the provisions set forth in M.P.E.P. 708.02, VIII, thus the petition is **GRANTED**.

The application will be forwarded to the examiner for action on the merits commensurate with this decision.

Should there be any questions with regard to this letter please contact John Kittle by letter addressed to the Director, Technology Center 3700/2900, P.O. Box 1450 Alexandria, VA 22313-1450, or by telephone at (703) 308-0873 or by facsimile transmission at (703) 308-3139.

John E. Kittle
Director
Technology Center 3700/2900

SPE RESPONSE FOR CERTIFICATE OF CORRECTION

Paper No.: _____

DATE : 08/06/05

TO SPE OF : ART UNIT 2913

SUBJECT : Request for Certificate of Correction on Patent No.: 29/200420 D507562

A response is requested with respect to the accompanying request for a certificate of correction.

Please complete this form and return with file, within **7** days to:
Palm location **7580, Certificates of Correction Branch – South Tower – 9A22**
If response is for an IFW, **return to employee (named below) via PUBSCofC Team in MADRAS.**
With respect to the change(s) requested, correcting Office and/or Applicant's errors, should the patent read as shown in the certificate of correction (COCIN)? No new matter should be introduced, nor should the scope or meaning of the claims be changed.

Thank You For Your Assistance

Angela Green
Certificates of Correction Branch
Tel. No. 703-305-9380 ext. 123

The request for issuing the above-identified correction(s) is hereby:
Note your decision on the appropriate box.

- ☑ **Approved** — **All** changes apply.
- ☐ **Approved in Part** — Specify below which changes **do not** apply.
- ☐ **Denied** — State the reasons for denial below.

Comments:

The title, item (54), on the cover of the patent is inconsistent with the claim & Figure descriptions and therefore should be changed.

IAN SIMMONS
PATENT EXAMINER
SPE

2916
Art Unit

UNITED STATES PATENT AND TRADEMARK OFFICE

COMMISSIONER FOR PATENTS
UNITED STATES PATENT AND TRADEMARK OFFICE
P.O. BOX 1450
ALEXANDRIA, VA 22313-1450
www.uspto.gov

Brian L. Wamsley, Esq.
Goodwin Procter LLP
599 Lexington Avenue
New York NY 10022

COPY MAILED

JAN 16 2007

OFFICE OF PETITIONS

In re Application of	:	
Park	:	
Application No. 29/200,473	:	ON PETITION
Filed: February 24, 2004	:	
Attorney Docket No. 103799/134657	:	
For: AUXILIARY SPECTACLE FRAME		

This is a decision on the petition under 37 CFR 1.137(b), filed on August 22, 2006 (certificate of mailing date August 18, 2006), to revive the above-identified application.

The petition is **DISMISSED**.

Any request for reconsideration of this decision must be submitted within TWO (2) MONTHS from the mail date of this decision. Extensions of time under 37 CFR 1.136(a) are permitted. The reconsideration request should include a cover letter entitled "Renewed Petition under 37 CFR 1.137(b)." This is **not** final agency action within the meaning of 5 U.S.C. § 704.

The application became abandoned for failure to submit corrected formal drawings, the issue fee, and a completed PTOL-85B in response to the Notice of Allowance and Fee(s) Due and Notice of Allowability, both mailed February 2, 2006, which set a statutory period for reply of three (3) months. No reply was filed. Accordingly, the application became abandoned on May 3, 2006. A Notice of Abandonment was mailed on June 30, 2006.

A grantable petition under 37 CFR 1.137(b) must be accompanied by: (1) the required reply, unless previously filed; (2) the petition fee as set forth in 37 CFR 1.17(m); (3) a statement that the entire delay in filing the required reply from the due date for the reply until the filing of a grantable petition pursuant to 37 CFR 1.137(b) was unintentional; and (4) any terminal disclaimer (and fee as set forth in 37 CFR 1.20(d)) required by 37 CFR 1.137(c).

The instant petition lacks item (4).

With respect to item (4) above, a terminal disclaimer is missing from the instant petition and is required for all design applications, regardless of the application's filing date. 37 CFR 1.137(d)(1).

Further correspondence with respect to this matter should be addressed as follows:

By mail:
Mail Stop PETITION
Commissioner for Patents
Post Office Box 1450
Alexandria, VA 22313-1450

By hand:
U.S. Patent and Trademark Office
Customer Service Window, Mail Stop Petition
Randolph Building
401 Dulany Street
Alexandria, VA 22314

By FAX:
(571) 273-8300 - ATTN: Office of Petitions

Telephone inquiries should be directed to the undersigned at (571) 272-3230.

Shirene Willis Brantley

Shirene Willis Brantley
Senior Petitions Attorney
Office of Petitions

UNITED STATES PATENT AND TRADEMARK OFFICE

COMMISSIONER FOR PATENTS
UNITED STATES PATENT AND TRADEMARK OFFICE
P.O. BOX 1450
ALEXANDRIA, VA 22313-1450
www.uspto.gov

Brian L. Wamsley, Esq.
Goodwin Procter LLP
599 Lexington Avenue
New York NY 10022

COPY MAILED

APR 27 2007

OFFICE OF PETITIONS

In re Application of :
Park :
Application No. 29/200,473 :
Filed: February 24, 2004 :
Attorney Docket No. 103799/134657 :
For: AUXILIARY SPECTACLE FRAME

ON PETITION

This is a decision on the reconsideration petition under 37 CFR 1.137(b), filed on February 26, 2007 (certificate of mailing date February 23, 2007), to revive the above-identified application.

The application became abandoned for failure to submit corrected formal drawings, the issue fee, and a completed PTOL-85B in response to the Notice of Allowance and Fee(s) Due and Notice of Allowability, both mailed February 2, 2006, which set a statutory period for reply of three (3) months. No reply was filed. Accordingly, the application became abandoned on May 3, 2006. A Notice of Abandonment was mailed on June 30, 2006.

Applicant has submitted a proper reply in the form of the issue fee and a completed PTOL-85, an acceptable statement of the unintentional nature of the delay in responding to the February 2, 2006 Notice of Allowance and Fee(s) Due, the petition fee, and a terminal disclaimer.

The petition is **granted**.

This application is being forwarded to Publishing Division for processing into a patent.

Telephone inquiries should be directed to the undersigned at (571) 272-3230.

Shirene Willis Brantley

Shirene Willis Brantley
Senior Petitions Attorney
Office of Petitions

UNITED STATES PATENT AND TRADEMARK OFFICE

Commissioner for Patents
United States Patent and Trademark Office
P.O. Box 1450
Alexandria, VA 22313-1450
www.uspto.gov

AUG 04 2004

Arthur Jacob
25 East Salem Street
P.O. Box 686
Hackensack NJ 07601

In re Application of	:	
Donald Brushaber	:	
Serial No.: 29/200,482	:	DECISION ON PETITION
Filed: February 27, 2004	:	
For: Floating Dock Ladder	:	

This is in response to applicants' petition filed June 16, 2004, to make the above-identified application special under the provisions of 37 CFR 1.102(c), based on the age of the applicant.

Applicant has satisfied the provisions set forth in M.P.E.P. 708.02, IV. Therefore the petition is **GRANTED.**

The application will be forwarded to the examiner for action on the merits commensurate with this decision..

Should there be any questions with regard to this letter please contact John Kittle by letter addressed to the Director, Technology Center 3700/2900, P.O. Box 1450 Alexandria, VA 22313-1450, or by telephone at (703) 308-0873 or by facsimile transmission at (703) 308-3139.

John E. Kittle

John E. Kittle
Director
Technology Center 3700/2900

UNITED STATES PATENT AND TRADEMARK OFFICE

Commissioner for Patents
United States Patent and Trademark Office
P.O. Box 1450
Alexandria, VA 22313-1450
www.uspto.gov

AUG 24 2004

Arthur Jacob
25 East Salem Street
P.O. Box 686
Hackensack NJ 07601

In re Application of	:	
Donald Brushaber	:	DECISION ON PETITION
Serial No.: 29/200,483	:	
Filed: February 27, 2004	:	
For: Adustable Mooring Bracket	:	
	:	

This is in response to applicants' petition filed June 16, 2004, to make the above-identified application special under the provisions of 37 CFR 1.102(c), based on the age of the applicant.

Applicant has satisfied the provisions set forth in M.P.E.P. 708.02, IV. Therefore the petition is **GRANTED**.

The application will be forwarded to the examiner for action on the merits commensurate with this decision.

Should there be any questions with regard to this letter please contact John Kittle by letter, addressed to the Director, Technology Center 3700/2900, P.O. Box 1450 Alexandria, VA 22313-1450 Washington, DC 20231, or by telephone at (703) 308-0873 or by facsimile transmission at (703) 308-3139.

John E. Kittle

John E. Kittle
Director,
Technology Center 3700/2900

UNITED STATES PATENT AND TRADEMARK OFFICE

Commissioner for Patents
United States Patent and Trademark Office
P.O. Box 1450
Alexandria, VA 22313-1450
www.uspto.gov

COPY MAILED

OCT 0 2 2008

OFFICE OF PETITIONS

BARNES & THORNBURG LLP
P.O. BOX 2786
CHICAGO IL 60690-2786

In re Application of :
Illenberger et al. :
Application No. 29/200,491 : ON PETITION
Filed: February 27, 2004 :
Attorney Docket No. 926501-95602 :

This is a decision on

(1) the petition under 37 CFR 1.181 (no fee) requesting withdrawal of the holding of abandonment in the above-identified application and

(2) the petition under the unintentional provisions of 37 CFR 1.137(b) to revive the above-identified application.

These petitions were filed concurrently on April 1, 2008 and again on August 1, 2008,

The petition under 37 C.F.R. 1.181 is **DISMISSED** and the petition to revive under 37 C.F.R. 1.137(b) is **DISMISSED**.

This application was held abandoned for failure to timely respond to the Office action of December 18, 2007, which set a 2 month statutory period for reply. Accordingly, this application became abandoned on February 19, 2008.

Withdraw the Holding of Abandonment

Any request for reconsideration of this decision should be filed within two (2) months from the mail date of this decision. *Note* 37 CFR 1.181(f). The request for reconsideration should include a cover letter and be entitled as a "Renewed Petition under 37 CFR 1.181 to Withdraw the Holding of Abandonment."

Petitioner states that a reply was in fact timely filed. To support this assertion, petitioner has submitted a copy of a return postcard which acknowledges receipt by the U.S. Patent and Trademark Office (USPTO) on February 11, 2008 of, *inter alia,* a Response to Notice to File Corrected Application Papers, a Copy of Notice to File Corrected Application Papers, a Replacement Drawing Sheet, and an addressed postage paid receipt postcard. A copy of the previously submitted reply accompanies the petition.

However, the postcard receipt did not properly identify the reply such that it would provide prima facie evidence that the reply was timely filed. Such proper identification on the postcard receipt is required in showing that a reply was timely filed. MPEP 711.03(c)I.B. The Notice to File Corrected Application Papers (Notice) filed with the response to the Office action of December 18, 2007 did have the correct serial number for the above cited application, but this does not give proper identification to the entire submission. The postcard receipt and cover page to this filing identified an application with a different serial number and title than the application identified in the Notice. Also, the Replacement Drawing Sheet did not have any identifying information.

Accordingly, absent the required evidence to establish that a reply was timely filed, the petition requesting withdrawal of the holding of abandonment cannot be granted at this time.

Revive, Unintentional Delay

Any request for reconsideration of this decision must be submitted within TWO (2) MONTHS from the mail date of this decision. Extensions of time under 37 CFR 1.136(a) are permitted. The reconsideration request should include a cover letter entitled "Renewed Petition under 37 CFR 1.137(b)." This is **not** a final agency action within the meaning of 5 U.S.C. § 704.

A grantable petition under 37 CFR 1.137(b) must be accompanied by: (1) the required reply, unless previously filed; (2) the petition fee as set forth in 37 CFR 1.17(m); (3) a statement that the entire delay in filing the required reply from the due date for the reply until the filing of a grantable petition pursuant to 37 CFR 1.137(b) was unintentional; and (4) any terminal disclaimer (and fee as set forth in 37 CFR 1.20(d)) required by 37 CFR 1.137(d). Where there is a question as to whether either the abandonment or the delay in filing a petition under 37 CFR 1.137 was unintentional, the Director may require additional information. See MPEP 711.03(c)(II)(C) and (D). The present petition lacks item (4).

Since the above-identified application is a design application, 37 CFR 1.137(d) requires a terminal disclaimer dedicating to the public a terminal part of the term of any patent granted on the application or any patent granted on any continuing application that contains a specific reference under 35 U.S.C. 120, 121, or 365(c) to the application. A terminal disclaimer was not filed with the present petition. Such a disclaimer may be made via form PTO/SB/63.

In regard to the petition fee, the request authorizes the charging of additional fees to deposit account number 23-0920, and the fee set forth in 37 CFR 1.17(m) ($770.00 for a small entity), as required by 37 CFR 1.137(b), has been charged to said account.

In regard to the statement of delay, 37 CFR 1.137(b)(3) requires a statement that "the entire delay in filing the required reply from the due date for the reply until the filing of a grantable petition pursuant to 37 CFR 1.137(b) was unintentional." Since the statement appearing in the petition varies from the language required by 37 CFR 1.137(b)(3), the statement is being construed as the required statement. Petitioner must notify the Office if this is **not** a correct reading of the statement appearing in the petition.

Also, the application file does not indicate a change of address has been filed in this case, although the address given on the petition differs from the address of record. A change of address should be filed in this case in accordance with MPEP 601.03. A courtesy copy of this decision is being mailed to the address noted on the petition. However, until otherwise instructed, all future correspondence regarding this application will be mailed solely to the address of record.

Telephone inquiries concerning this decision should be directed to Christopher Bottorff at (571) 272-6692.

David Bucci
Petitions Examiner
Office of Petitions

cc: HUSCH BLACKWELL SANDERS, LLP
WELSH & KATZ
120 S RIVERSIDE PLAZA
22ND FLOOR
CHICAGO, IL 60606

UNITED STATES PATENT AND TRADEMARK OFFICE

Commissioner for Patents
United States Patent and Trademark Office
P.O. Box 1450
Alexandria, VA 22313-1450
www.uspto.gov

Husch Blackwell Sanders LLP Welsh & Katz
120 S RIVERSIDE PLAZA
22ND FLOOR
CHICAGO IL 60606

COPY MAILED
JAN 09 2009

In re Application of	:	
Illenberger et al.	:	
Application No. 29/200,491	:	ON PETITION
Filed: February 27, 2004	:	
Attorney Docket No. 926501-95602	:	

This is a decision on

(1) the renewed petition under 37 CFR 1.181 (no fee) requesting withdrawal of the holding of abandonment in the above-identified application and

(2) the renewed petition under the unintentional provisions of 37 CFR 1.137(b) to revive the above-identified application.

These renewed petitions were filed concurrently on October 7, 2008,

The petition under 37 C.F.R. 1.181 is **DISMISSED** and the petition to revive under 37 C.F.R. 1.137(b) is **GRANTED**.

This application was held abandoned for failure to timely respond to the Office action of December 18, 2007, which set a 2 month statutory period for reply. Accordingly, this application became abandoned on February 19, 2008.

Withdraw the Holding of Abandonment

Any request for reconsideration of this decision should be filed within two (2) months from the mail date of this decision. *Note* 37 CFR 1.181(f). The request for reconsideration should include a cover letter and be entitled as a "Renewed Petition under 37 CFR 1.181 to Withdraw the Holding of Abandonment."

The renewed petition has been carefully considered and again the postcard receipt has been determined as not properly identifying the reply such that it would provide *prima facie* evidence that the reply was timely filed.

Petitioner again asserts that a reply was in fact timely filed. To support this assertion, petitioner notes that the postcard acknowledging receipt of papers by the U.S. Patent and Trademark Office

(USPTO) on February 11, 2008 identifies all of the papers applicants assert were filed. These papers included, *inter alia,* a Response to Notice to File Corrected Application Papers, a Copy of Notice to File Corrected Application Papers, a Replacement Drawing Sheet, and an addressed postage paid receipt postcard.

However, the postcard receipt and cover page titled Response to Notice to File Corrected Application Papers identify that the filing is directed to application serial number 29/200,480 ('480 application), filed February 27, 2004, for applicant Michael C. Illenberger, and having the title "Ovalish Bottle." The postcard receipt and cover page do not identify that the filing is directed to the present application, serial number 29/200,491 ('491 application). Both the '480 application and the '491 application were filed February 27, 2004 for applicant Michael C. Illenberger, so these identifiers do not distinguish the filing as being directed to the '491 application. Also, previous correspondences filed in the '491 application by applicants identify numerous titles for the '491 application. The title was officially changed by amendment on October 18, 2004 as a "Dispensing Portion of a Dispenser," which corresponds with the official title on record with the USPTO. Accordingly, the title "Ovalish Bottle" does not distinguish the filing as being directed to the '491 application.

The copy of the Notice to File Corrected Application Papers attached to the filing did include serial number 29/200,491 among the identifiers on that page. However, this single identifier located on a subsequent page of the filing does not distinguish the filing as being directed to the '491 application when every other identifier listed in the filing indicates that the papers are directed to the '480 application. Moreover, when applicants submitted papers that substantially identified the '480 application, the burden and expense of determining that the papers were actually intended for the '491 application did not fall on the USPTO.

Also, the correct standard in determining if a holding of abandonment is to be withdrawn in instances such as this is whether or not the postcard receipt properly identified the reply such that it would provide prima facie evidence that the reply was timely filed. MPEP § 711.03(c) I.B. The listing of one document on the postcard receipt that includes different identifiers than the receipt and the other documents listed on the receipt does not properly identify the reply on the receipt as having been filed in the application identified on the one differing document listed. Here, the postcard receipt identified that the reply was directed to the '480 application and does not properly identify that the reply is directed to the '491 application. Accordingly, the receipt acknowledges that papers were received by the USPTO on February 11, 2008 in the '480 application. Therefore, absent the required evidence to establish that a reply was timely filed in the '491 application, the petition requesting withdrawal of the holding of abandonment is dismissed

Revive, Unintentional Delay

The petition satisfies the requirements of 37 CFR 1.137(b) in that petitioner has supplied (1) the reply in the form of Replacement Drawings; (2) the petition fee of $770.00; (3) a proper statement of unintentional delay; and (4) a terminal disclaimer and fee as required by 37 CFR 1.137(d).

The terminal disclaimer is accepted and has been made of record.

Telephone inquiries concerning this decision should be directed to Christopher Bottorff at (571) 272-6692.

This application is being referred to the Office of Data Management for processing into a patent.

David Bucci
Petitions Examiner
Office of Petitions

ak/rg
RLG

UNITED STATES PATENT AND TRADEMARK OFFICE

Commissioner for Patents
United States Patent and Trademark Office
P.O. Box 1450
Alexandria, VA 22313-1450
www.uspto.gov

WADE W. SHERMAN
JONES WALDO HOLBROOK & MCDONOUGH
SUITE 1500
170 SOUTH MAIN STREET
SALT LAKE CITY, UT 84095

COPY MAILED
FEB 1 3 2006
OFFICE OF PETITIONS

In re Application of	:	
Brian Shirley	:	
Application No. 29/200,554	:	ON PETITION
Filed: March 1, 2004	:	
Attorney Docket No. 15402.0005	:	

This is a decision on the petition under 37 CFR 1.137(b), filed October 28, 2005, to revive the above-identified application.

The petition is **GRANTED.**

The above-identified application became abandoned for failure to submit the Issue fee in a timely manner in reply to the Notice of Allowance mailed April 20, 2005, which set a statutory period for reply of three (3) months. Accordingly, the above-identified application became abandoned on July 21, 2005.

The petition satisfies the conditions for revival pursuant to the provisions of 37 CFR 1.137(b) in that (1) the reply in the form of payment of the issue fee; (2) the petition fee; and (3) the required statement of unintentional delay have been received. Accordingly, the issue fee is accepted as having been unintentionally delayed.

Telephone inquiries concerning this decision should be directed to the undersigned at (571) 272-3210.

This matter is being referred to the Publishing Division for further processing.

Irvin Dingle
Petitions Examiner
Office of Petitions

OIPE JC141
MAR 3 1 2004
PATENT & TRADEMARK OFFICE

04-01-04 30

IN THE UNITED STATES PATENT AND TRADEMARK OFFICE

Applicants:	David K. Pearson, Sr.
Application Number:	29/200,598
Date Filed:	March 2, 2004
Title:	Camshaft Balance Weight for Automotive Engines
Examiner:	--unknown-- Stevens, Maurice
Group Art Unit:	--unknown-- 2913

March 31, 2004

PETITION TO MAKE SPECIAL PURSUANT TO 37 CFR 1.102(c)

Commissioner for Patents
P.O. Box 1450
Alexandria, VA 22313-1450

Dear Commissioner:

Due to the fact that the applicant herein, David K. Pearson, Sr., is over 65 years old, he petitions the Commissioner to accord 'special' status to the instant patent application entitled "Cam Shaft Balance Weight For Automotive Engines", so that it can be advanced out of turn for expedited examination. No fee accompanies this Petition, however, a copy of his Driver's License is attached hereto as evidence of age being greater than 65 years.

For the above-stated reasons, the applicants herein respectfully request that the Commissioner give the instant patent application "special" status, so that it may receive expedited examination.

Respectfully submitted on behalf of David K. Pearson, Sr. by:

Dorothy S. Morse

Dorothy S. Morse, Esq. Attorney for Applicant
515 Park Drive, ~~N.W.~~
Bradenton, FL 34209-1847
(941) 747-4313 (phone)/ (941) 748-4008 (fax)
U.S. Patent and Trademark Office Registration Number: 38,977

PETITION GRANTED

R Crispino

Richard Crispino
Special Program Examiner
Technology Center 1700
MAY - 5 2005

UNITED STATES PATENT AND TRADEMARK OFFICE

Commissioner for Patents
United States Patent and Trademark Office
P.O. Box 1450
Alexandria, VA 22313-1450
www.uspto.gov

8/4/05

SYLMARK, INC
4929 WILSHIRE BLVD
SUITE 500
LOS ANGELES, CA 90010

In re Application of
Mitchell H. Babkes
Serial No.: 29/200,630
Filed: March 1, 2004
Attorney Docket No.: CM-4001US

: PETITION DECISION

This is a decision on applicant's petition to revive patent application under 37 CFR 1.137(b), received March 24, 2005, to revive an unintentionally abandoned application.

This application became abandoned for failure to respond to the Notice of Allowance mailed October 1, 2004, which set a three-month statutory period to submit the Issue Fee and formal drawings. The Issue fee was submitted October 6, 2004; however as no formal drawings were received by January 3, 2005, a Notice of Abandonment was mailed March 14, 2005. Applicant then filed this petition.

A grantable petition for a design application under 37 CFR 1.137(b), as revised December 1, 1997, requires four items: (1) a petition and petition fee; (2) a complete response if not earlier made; (3) a statement that the entire period of delay in prosecution was unintentional; and (4) a terminal disclaimer and disclaimer fee. The requirement for a terminal disclaimer has been waived, as the petition was filed within one month of the mailing of the Notice of Abandonment.

Applicant's petition is **GRANTED**.

The application will be forwarded to Publication Division for printing as a patent in due course.

The terminal disclaimer fee of $65.00 will be refunded to applicant's Deposit account 50-2922, as directed.

Should there be any questions with respect to this decision, please contact Sandra Morris; by mail addressed to: Director, Technology Center 1700/2900, P.O. Box 1450, Alexandria, VA 22313-1450; or by telephone at (571) 272-2622.

Jacqueline M. Stone

Jacqueline Stone
Director, Technology Center 1700/2900

UNITED STATES PATENT AND TRADEMARK OFFICE

Commissioner for Patents
United States Patent and Trademark Office
P.O. Box 1450
Alexandria, VA 22313-1450
www.uspto.gov

JACK A. KANZ
502 SOUTH COTTONWOOD DRIVE
RICHARDSON, TX 75080

COPY MAILED

JAN 26 2006

OFFICE OF PETITIONS

In re Application of

P. Belokin, et al.

Application No. 29/200,755

Filed: March 3, 2004

Attorney Docket No. 64215.15

DECISION ON PETITION

This is a decision on the petition under 37 CFR 1.181 to withdraw the holding of abandonment.

The petition under 37 CFR 1.181(a) to withdraw the holding of abandonment is **granted**.

This application was held abandoned on September 28, 2005, after no response was received to the Notice of Allowability and Notice of Allowance and Issue Fee Due both mailed June 27, 2005. The notices allowed a period for reply of three months from its mailing date A Notice of Abandonment was mailed on December 1, 2005, indicating that replies to the Notice of Allowability and Notice of Allowance and Issue Fee Due were not received.

Petitioner has established that petitioner did not receive the Notice of Allowability and Notice of Allowance and Issue Fee Due . The holding of abandonment is withdrawn, accordingly.

No petition fee is due.

The application file is being forwarded to the Office of Patent Publications for further processing.

Inquiries regarding this decision may be directed to the undersigned at (571) 272-3222.

Kenya A. McLaughlin
Petitions Attorney
Office of Petitions

UNITED STATES PATENT AND TRADEMARK OFFICE

Commissioner for Patents
United States Patent and Trademark Office
P.O. Box 1450
Alexandria, VA 22313-1450
www.uspto.gov

MAY 11 2004

BANNER & WITCOFF
1001 G STREET N W
SUITE 1100
WASHINGTON DC 20001

In re Application of	:	
David Dombrow	:	
Serial No.: 29/200,779	:	DECISION ON PETITION
Filed: March 5, 2004	:	
For: Portion of a shoe upper	:	

This is in response to the petition applicant filed on April 2, 2004 to make the above-identified application special under the provisions of 37 CFR 1.102(d).

Applicant has satisfied the provisions set forth in M.P.E.P. 708.02, VIII, thus the petition is **GRANTED**.

The application will be forwarded to the examiner for action on the merits commensurate with this decision.

Should there be any questions with regard to this letter please contact John Kittle by letter addressed to the Director, Technology Center 3700/2900, P.O. Box 1450 Alexandria, VA 22313-1450, or by telephone at (703) 308-0873 or by facsimile transmission at (703) 308-3139.

John E. Kittle

John E. Kittle
Director
Technology Center 3700/2900

UNITED STATES PATENT AND TRADEMARK OFFICE

Commissioner for Patents
United States Patent and Trademark Office
P.O. Box 1450
Alexandria, VA 22313-1450
www.uspto.gov

Stephen H. Bean
XanGo, LLC
3098 W. Executive Parkway
Lehi UT 84043

COPY MAILED

JAN 23 2007

OFFICE OF PETITIONS

In re Application of :
Matauch :
Application No. 29/200,782 :
Filed: March 3, 2004 :
Attorney Docket No. 1006.US :
For: BOTTLE

ON PETITION

This is a decision on the petition under 37 CFR 1.137(b), filed August 23, 2006, to revive the above-identified application.

The petition is **dismissed**.

Any request for reconsideration of this decision must be submitted within TWO (2) MONTHS from the mail date of this decision. Extensions of time under 37 CFR 1.136(a) are permitted. The reconsideration request should include a cover letter entitled "Renewed Petition under 37 CFR 1.137(b)." Petitioner is advised that this is not a final agency decision.

This application became abandoned for failure to timely reply to the *Ex parte Quayle* Office action, mailed November 2, 2005, which set a two month period for reply. This application became abandoned on January 3, 2006. A Notice of Abandonment was mailed on June 8, 2006.

A grantable petition pursuant to 37 CFR 1.137(b) must be accompanied by:

(1) the required reply, unless previously filed.

(2) the petition fee as set forth in 37 CFR 1.17(m);

(3) a statement that the **entire** delay in filing the required reply from the due date for the reply until the filing of a grantable petition pursuant to 37 CFR 1.137(b) was unintentional. The Director may require additional information where there is a question whether the delay was unintentional; and

(4) any terminal disclaimer (and fee set forth in 37 CFR 1.20(d)) required pursuant to 37 CFR 1.137(d).

The instant petition does not satisfy requirement (4) above.

37 CFR 1.137(d) requires that a petition under 37 CFR 1.137(b) be accompanied by a terminal disclaimer and fee regardless of the period of abandonment in a design application. This application is a design application. Thus, petitioner is required to submit a terminal disclaimer.

The statement of unintentional delay was not signed by a person who would have been in a position of knowing that the delay in filing a timely response was unintentional. In the event that petitioner has no knowledge that the delay was in fact unintentional, petitioner should make a reasonable inquiry to ascertain that, in fact, the delay was unintentional. If petitioner discovers that the delay was intentional, petitioner must so notify the Office. A courtesy copy of this decision is being mailed to petitioner. However, any future correspondence regarding this application will be mailed to the address of record.

Telephone inquiries concerning this decision should be directed to the undersigned at (571) 272-3230.

Further correspondence with respect to this matter should be addressed as follows:

By mail:
Mail Stop PETITION
Commissioner for Patents
Post Office Box 1450
Alexandria, VA 22313-1450

By hand:
U.S. Patent and Trademark Office
Customer Service Window, Mail Stop Petition
Randolph Building
401 Dulany Street
Alexandria, VA 22314

By FAX:
(571) 273-8300 - ATTN: Office of Petitions

Shirene Willis Brantley
Senior Petitions Attorney
Office of Petitions

CC: STOEL RIVES, LLP
ONE UTAH CENTER SUITE 1100
201 S. MAIN STREET
SALT LAKE CITY, UT 84111-4904

UNITED STATES PATENT AND TRADEMARK OFFICE

Commissioner for Patents
United States Patent and Trademark Office
P.O. Box 1450
Alexandria, VA 22313-1450
www.uspto.gov

STOEL RIVES LLP - SLC
201 SOUTH MAIN STREET
ONE UTAH CENTER
SALT LAKE CITY UT 84111

COPY MAILED

SEP 13 2007

OFFICE OF PETITIONS

In re Application of :
Matauch :
Application No. 29/200,782 : ON PETITION
Filed: March 3, 2004 :
Attorney Docket No. 1006.US :
For: BOTTLE

This is a decision on the reconsideration petition under 37 CFR 1.137(b), filed June 21, 2007 and resubmitted on June 25, 2007, to revive the above-identified application.

The petition is **dismissed**.

Any request for reconsideration of this decision must be submitted within TWO (2) MONTHS from the mail date of this decision. Extensions of time under 37 CFR 1.136(a) are permitted. The reconsideration request should include a cover letter entitled "Renewed Petition under 37 CFR 1.137(b)." Petitioner is advised that this is not a final agency decision.

This application became abandoned for failure to timely reply to the *Ex parte Quayle* Office action, mailed November 2, 2005, which set a two month period for reply. This application became abandoned on January 3, 2006. A Notice of Abandonment was mailed on June 8, 2006.

A grantable petition pursuant to 37 CFR 1.137(b) must be accompanied by:

(1) the required reply, unless previously filed.

(2) the petition fee as set forth in 37 CFR 1.17(m);

(3) a statement that the **entire** delay in filing the required reply from the due date for the reply until the filing of a grantable petition pursuant to 37 CFR 1.137(b) was unintentional. The Director may require additional information where there is a question whether the delay was unintentional; and

(4) any terminal disclaimer (and fee set forth in 37 CFR 1.20(d)) required pursuant to 37 CFR 1.137(d).

The instant petition does not satisfy requirement (4) above.

The terminal disclaimer submitted with the present reconsideration petition is signed by Ryan D. Benson. Practitioners associated with customer number 32642 were empowered to prosecute this application, per the Notice mailed on April 10, 2007. Ryan D. Benson is not associated with customer number 32642. Therefore, the terminal disclaimer is not signed by an attorney of record.

Please submit a terminal disclaimer, accompanied by the required $65.00 fee, signed by a practitioner associated with customer number 32642.

It is noted that petitioner paid two $65.00 terminal disclaimer fees and two $510.00 extension of time fees with the present reconsideration petition. The one terminal disclaimer fee and one extension of time fee will be refunded to petitioner's credit card.

Telephone inquiries concerning this decision should be directed to the undersigned at (571) 272-3230.

Further correspondence with respect to this matter should be addressed as follows:

By mail:
Mail Stop PETITION
Commissioner for Patents
Post Office Box 1450
Alexandria, VA 22313-1450

By hand:
U.S. Patent and Trademark Office
Customer Service Window, Mail Stop Petition
Randolph Building
401 Dulany Street
Alexandria, VA 22314

By FAX:
(571) 273-8300 - ATTN: Office of Petitions

Shirene Willis Brantley

Shirene Willis Brantley
Senior Petitions Attorney
Office of Petitions

RECEIVED
CENTRAL FAX CENTER
FEB 13 2008

UNITED STATES PATENT AND TRADEMARK OFFICE

Commissioner for Patents
United States Patent and Trademark Office
P.O. Box 1450
Alexandria, VA 22313-1450
www.uspto.gov

RECEIVED
SEP 17 2007
STOEL RIVES S.L.C.

STOEL RIVES LLP - SLC
201 SOUTH MAIN STREET
ONE UTAH CENTER
SALT LAKE CITY UT 84111

COPY MAILED
SEP 13 2007
OFFICE OF PETITIONS

In re Application of :
Matauch :
Application No. 29/200,782 :
Filed: March 3, 2004 :
Attorney Docket No. 1006.US - 62727/14 :
For: BOTTLE

ON PETITION

This is a decision on the reconsideration petition under 37 CFR 1.137(b), filed June 21, 2007 and resubmitted on June 25, 2007, to revive the above-identified application.

The petition is **dismissed**.

Any request for reconsideration of this decision must be submitted within TWO (2) MONTHS from the mail date of this decision. Extensions of time under 37 CFR 1.136(a) are permitted. The reconsideration request should include a cover letter entitled "Renewed Petition under 37 CFR 1.137(b)." Petitioner is advised that this is not a final agency decision.

This application became abandoned for failure to timely reply to the *Ex parte Quayle* Office action, mailed November 2, 2005, which set a two month period for reply. This application became abandoned on January 3, 2006. A Notice of Abandonment was mailed on June 8, 2006.

A grantable petition pursuant to 37 CFR 1.137(b) must be accompanied by:

(1) the required reply, unless previously filed.

(2) the petition fee as set forth in 37 CFR 1.17(m);

(3) a statement that the **entire** delay in filing the required reply from the due date for the reply until the filing of a grantable petition pursuant to 37 CFR 1.137(b) was unintentional. The Director may require additional information where there is a question whether the delay was unintentional; and

RECEIVED
CENTRAL FAX CENTER
FEB 13 2008

(4) any terminal disclaimer (and fee set forth in 37 CFR 1.20(d)) required pursuant to 37 CFR 1.137(d).

The instant petition does not satisfy requirement (4) above.

The terminal disclaimer submitted with the present reconsideration petition is signed by Ryan D. Benson. Practitioners associated with customer number 32642 were empowered to prosecute this application, per the Notice mailed on April 10, 2007. Ryan D. Benson is not associated with customer number 32642. Therefore, the terminal disclaimer is not signed by an attorney of record.

Please submit a terminal disclaimer, accompanied by the required $65.00 fee, signed by a practitioner associated with customer number 32642.

It is noted that petitioner paid two $65.00 terminal disclaimer fees and two $510.00 extension of time fees with the present reconsideration petition. The one terminal disclaimer fee and one extension of time fee will be refunded to petitioner's credit card.

Telephone inquiries concerning this decision should be directed to the undersigned at (571) 272-3230.

Further correspondence with respect to this matter should be addressed as follows:

By mail: Mail Stop PETITION
Commissioner for Patents
Post Office Box 1450
Alexandria, VA 22313-1450

By hand: U.S. Patent and Trademark Office
Customer Service Window, Mail Stop Petition
Randolph Building
401 Dulany Street
Alexandria, VA 22314

By FAX: (571) 273-8300 - ATTN: Office of Petitions

Shirene Willis Brantley

Shirene Willis Brantley
Senior Petitions Attorney
Office of Petitions

UNITED STATES PATENT AND TRADEMARK OFFICE

Commissioner for Patents
United States Patent and Trademark Office
P.O. Box 1450
Alexandria, VA 22313-1450
www.uspto.gov

STOEL RIVES LLP - SLC
201 SOUTH MAIN STREET
ONE UTAH CENTER
SALT LAKE CITY UT 84111

COPY MAILED

JUN 23 2008

OFFICE OF PETITIONS

In re Application of	:	
Matauch	:	
Application No. 29/200,782	:	ON PETITION
Filed: March 3, 2004	:	
Attorney Docket No. 1006.US	:	
For: BOTTLE		

This is a decision on the reconsideration petition under 37 CFR 1.137(b), filed February 13, 2008, to revive the above-identified application.

This application became abandoned for failure to timely reply to the *Ex parte Quayle* Office action, mailed November 2, 2005, which set a two month period for reply. This application became abandoned on January 3, 2006. A Notice of Abandonment was mailed on June 8, 2006.

Applicant has submitted a proper reply in the form of an amendment, an acceptable statement of the unintentional nature of the delay in responding to the November 2, 2005 *Ex parte Quayle* Office action, a terminal disclaimer and required fee, and the petition fee.

The petition is **granted**.

This application is being forwarded to Technology Center AU 2912 for consideration of the amendment filed on June 21, 2007 and resubmitted on June 25, 2007.

Telephone inquiries concerning this decision should be directed to the undersigned at (571) 272-3230.

Shirene Willis Brantley

Shirene Willis Brantley
Senior Petitions Attorney
Office of Petitions

UNITED STATES PATENT AND TRADEMARK OFFICE

Commissioner for Patents
United States Patent and Trademark Office
P.O. Box 1450
Alexandria, VA 22313-1450
www.uspto.gov

SYLMARK, INC.
4929 WILSHIRE BLVD
SUITE 500
LOS ANGELES CA 90010

COPY MAILED

OCT 19 2005

OFFICE OF PETITIONS

In re Application of
Mitchell H. Babkes
Application No. 29/200,822
Filed: March 3, 2004
Attorney Docket No.: MO-4001US

ON PETITION

This is a decision on the petition filed October 3, 2005. The petition is title "Petition to Revive" but will be treated under 37 CFR 1.181 to withdraw the holding of abandonment for the above-identified application.

The petition under 37 CFR 1.181 is **GRANTED**.

The application was held abandoned on March 15, 2005, for failure to timely submit the issue fee, as required by the Notice of Allowance and Issue Fee Due mailed on December 14, 2004. A three (3) month period for reply was set. Accordingly, a Notice of Abandonment was mailed on September 6, 2005.

Petitioner asserts that the issue fee transmittal and an authorization to charge the issue were mailed December 20, 2004.

In support, petitioner has submitted, *inter alia*, a copy of the issue fee transmittal form with the certificate of mail dated December 20, 2004 and a post card receipt date stamped December 27, 2004 by the USPTO. For payment of the issue fee, the copy of the issue fee transmittal form provided authorizes the issue fee to be charged to Deposit Account No. 50-2922.

A search of the application file and the USPTO records does not reveal receipt of the issue fee transmittal but, the petition complies with the requirements set forth in 37 CFR 1.8(b).

Accordingly, the Notice of Abandonment mailed on September 6, 2005, is hereby withdrawn. No petition fee is necessary and none has been charged.

This matter will be referred to the Publishing Division to be processed into a patent.

Telephone inquiries concerning this matter may be directed to the undersigned Petitions Attorney at (571) 272-3212.

Patricia Faison-Ball

Patricia Faison-Ball
Senior Petitions Attorney
Office of Petitions

UNITED STATES PATENT AND TRADEMARK OFFICE

Commissioner for Patents
United States Patent and Trademark Office
P.O. Box 1450
Alexandria, VA 22313-1450
www.uspto.gov

WOODCOCK WASHBURN, LLP
ONE LIBERTY PLACE, 46TH FLOOR
1650 MARKET STREET
PHILADELPHIA, PA 19103

COPY MAILED

JUL 20 2006

OFFICE OF PETITIONS

In re Application of	:	
Lewis Bresler, et. al.	:	
Application No. 29/200,890	:	DECISION ON PETITION
Filed: March 5, 2004	:	
Attorney Docket No. C8868-00232	:	

This is a decision on the petition under 37 CFR 1.182, filed, March 27, 2006, to change the order of the named inventors in the above-identified application.

The petition is **DISMISSED**.

The issue fee in this application was paid on February 14, 2006. Effective May 29, 2000, the Office changed the practice by clarifying that an amendment under 37 CFR 1.312 (after allowance) must be filed prior to or with payment of the issue fee, and eliminated 37 CFR 1.312(b). Since a change to the order of the inventors' names is an amendment to the application, and amendments are not permitted after the payment of the issue fee, a petition under 37 CFR 1.182 to change the order of the inventors' names cannot be granted.

In order to now have the Letters Patent reflect the desired order of inventorship, petitioner must file a petition to withdraw from issue under 37 CFR 1.313(c)(2), a request for continued examination (RCE), and a renewed petition under 37 CFR 1.182 (which may act as the submission requirement in 37 CFR 1.114). Additionally, it is strongly recommended that a Supplemental Application Data Sheet with the desired order of inventorship be submitted with any petition to withdraw from issue under 37 CFR 1.313(c)(2). *Note* MPEP § 605.04(f). Once the patent issues, there is no basis for the USPTO to change the order of the named inventors. *See* Fina Technology v. Ewen, 60 USPQ2D 1314 (Fed. Cir. 2001) (the order of the named inventors is not a clerical error contemplated by § 255; it likewise cannot be corrected in a judicial proceeding under that provision).

If petitioner decides to withdraw this application from issue under 37 CFR 1.313(c)(2), petitioner is advised that the petition must be submitted and granted by the appropriate officials before the date of issue. *Note* 37 CFR 1.313(d).

In view of the above, the petition under § 1.182 to amend the order of inventors cannot be granted.

Further correspondence with respect to this matter should be addressed as follows:

By mail: Mail Stop PETITIONS
Commissioner for Patents
Post Office Box 1450
Alexandria, VA 22313-1450

By hand: Customer Service Window
Mail Stop Petitions
Randolph Building
401 Dulany Street
Alexandria, VA 22314

By fax: (571) 273-8300
ATTN: Office of Petitions

Any questions concerning this matter may be directed to Andrea Smith at (571) 272-3226.

Andrea Smith
Petitions Examiner
Office of Petitions

UNITED STATES PATENT AND TRADEMARK OFFICE

Commissioner for Patents
United States Patent and Trademark Office
P.O. Box 1450
Alexandria, VA 22313-1450
www.uspto.gov

DAVID G. HENRY
P.O. BOX 1470
WACO, TX 76703

COPY MAILED

AUG 2 5 2005

OFFICE OF PETITIONS

In re Application of	:	
McMinn, David	:	
Application No. 29/200,937	:	ON PETITION
Filed: March 5, 2004	:	
Attorney Docket No. Jeweled Jar Candle	:	

This is a decision on the petition under 37 C.F.R. § 1.137(b), filed August 18, 2005, to revive the above-identified application.

The petition is **GRANTED.**

The above-identified application became abandoned for failure to submit the issue fee in a timely manner in reply to the Notice of Allowance mailed February 10, 2005, which set a statutory period for reply of three (3) months. Accordingly, the above-identified application became abandoned on May 11, 2005. A Notice of Abandonment was mailed on June 13, 2005.

Petitioner has met the requirements to revive the above-identified application pursuant to 37 CFR 1.137(b).

This matter is being referred to the Publishing Division for processing into a patent.

Telephone inquiries regarding this decision should be directed to the undersigned at (571) 272-3282.

Liana Chase
Petitions Examiner
Office of Petitions
Office of the Deputy Commissioner
for Patent Examination Policy

UNITED STATES PATENT AND TRADEMARK OFFICE

Commissioner for Patents
United States Patent and Trademark Office
P.O. Box 1450
Alexandria, VA 22313-1450
www.uspto.gov

DAVID G. HENRY
900 WASHINGTON AVENUE
P.O. BOX 1470
WACO, TX 76701

COPY MAILED

NOV 0 8 2005

OFFICE OF PETITIONS

In re Application of :
John J. Brown, et al. :
Application No. 29/200,993 :
Filed: March 8, 2004 :
Attorney Docket No. BROWN-ATV SEATING :

ON PETITION

This is a decision on the renewed petition under 37 CFR 1.137(b), filed September 1, 2005, to revive the above-identified application.

The petition is **GRANTED.**

The above-identified application became abandoned for failure to submit the issue fee and corrected drawings in a timely manner in reply to the Notice of Allowance/Notice of Allowability mailed March 31, 2005, which set a statutory period for reply of three (3) months. Accordingly, the above-identified application became abandoned at midnight on June 30, 2005.

Receipt is acknowledged of the corrected Drawings filed on March 31, 2005.

The petition satisfies the conditions for revival pursuant to the provisions of 37 CFR 1.137(b) in that (1) the reply in the form of payment of the issue fee and corrected drawings; (2) the petition fee; and (3) the required statement of unintentional delay have been received. Accordingly, the issue fee is accepted as having been unintentionally delayed.

Telephone inquiries concerning this decision should be directed to the undersigned at (571) 272-3229.

This application matter is being forwarded to the Publishing Division for further processing.

Retta Williams

Retta Williams
Petitions Examiner
Office of Petitions

UNITED STATES PATENT AND TRADEMARK OFFICE

Commissioner for Patents
United States Patent and Trademark Office
P.O. Box 1450
Alexandria, VA 22313-1450
www.uspto.gov

THOMPSON E FEHR
GOLDENWEST CORPORATE CENTER SUITE 300
5025 ADAMS AVENUE
OGDEN UT 84403

COPY MAILED
MAR 26 2007
OFFICE OF PETITIONS

In re Application of	:	
Cameron Simpson	:	
Application No. 29/201,004	:	ON PETITION
Filed: March 9, 2004	:	
Attorney Docket No. PSIMPL-TSL	:	

This is a decision on the petition to revive an unintentionally abandoned application under 37 CFR 1.137(b), filed January 5, 2007.

The petition under 37 CFR 1.137(b) is **GRANTED**.

The above-identified application became abandoned for failure to timely pay the issue fee in response to the Notice of Allowance mailed June 26, 2006. This notice set a statutory period for reply of three (3) months. No issue fee having been received, the application became abandoned on September 27, 2006. A Notice of Abandonment was mailed on November 8, 2006.

With the instant petition, applicants paid the petition fee, made the proper statement of unintentional delay, submitted a terminal disclaimer, and paid the issue fee.

The matter is being forwarded to the Office of Patent Publication for processing into a patent.

Telephone inquiries related to this decision should be directed to the undersigned at (571)272-3207.

Cliff Congo
Petitions Attorney
Office of Petitions

UNITED STATES PATENT AND TRADEMARK OFFICE

Commissioner for Patents
United States Patent and Trademark Office
P.O. Box 1450
Alexandria, VA 22313-1450
www.uspto.gov

THE GOODYEAR TIRE & RUBBER COMPANY
DEPARTMENT 823
1144 EAST MARKET STREET
AKRON OH 44316-0001

COPY MAILED

FEB 2 4 2005

OFFICE OF PETITIONS

In re Application of
Noelle Elizabeth Russell et al.
Application No. 29/201,005
Filed: March 9, 2004
Attorney Docket No. DN2004-028

: DECISION REFUSING STATUS
: UNDER 37 CFR 1.47(a)

This is in response to the petition filed March 9, 2004 and supplemented on May 24, 2004, upon the refusal of an inventor to execute the application. The petition is treated under 37 CFR 1.47(a)

The petition is **DISMISSED**.

Rule 47 applicant is given TWO MONTHS from the mailing date of this decision to respond, correcting the below-noted deficiencies. Any response should be entitled "Request for Reconsideration of Petition Under 37 CFR 1.47(a)" and may include an oath or declaration executed by the inventor. **Failure to respond will result in abandonment of the application.** Any extensions of time will be governed by 37 CFR 1.136(a).

The above-identified application was filed on March 9, 2004, but without a signed declaration. A Petition was filed with the application but the petition was incomplete and thus was not addressed on the merits. Accordingly, on May 11, 2004, a "Notice To File Missing Parts of Application" was mailed, requiring *inter alia* a properly executed oath or declaration.

In response, on May 24, 2004, the present petition was filed with an oath or declaration executed by all of the joint inventors except Billy Joe Ratliff, Jr. Petitioners file the instant petition because telephone calls to Mr. Ratliff have not been returned and because the application materials have been mailed to his last known address but Mr. Ratliff has still not returned the executed oath or declaration.

A grantable petition under 37 CFR 1.47(a) requires:

(1) proof that the non-signing inventor cannot be reached or refuses to sign the oath or declaration after having been presented with the application papers (specification, claims and drawings);

(2) an acceptable oath or declaration in compliance with 35 U.S.C. §§ 115 and 116;

(3) the petition fee; and
(4) a statement of the last known address of the non-signing inventor.

The present petition lacks items (2) and (4).

As to item (2), an oath or declaration with Mr. Ratliff's name on it for the instant patent application, in compliance with 37 CFR 1.63, has not been presented. An executed oath or declaration has been presented for the remaining five inventors however.

With respect to item (4), the last known address of inventor Ratliff has not been provided as required by 37 CFR 1.47. Petitioners must provide a statement of the last known address of the nonsigning inventors. That address should be the last known address at which the inventors customarily receive mail. Ordinarily, the last known address will be the last known residence of the nonsigning inventor.

Further correspondence with respect to this matter should be addressed as follows:

By mail: Mail Stop Petitions
Commissioner for Patents
P.O. Box 1450
Alexandria, VA 22313-1450

By FAX: (703) 872-9306
Office of Petitions

Telephone inquiries concerning this matter may be directed to the undersigned Petitions Attorney at (571) 272-3212.

Patricia Faison-Ball

Patricia Faison-Ball
Senior Petitions Attorney
Office of Petitions

UNITED STATES PATENT AND TRADEMARK OFFICE

Commissioner for Patents
United States Patent and Trademark Office
P.O. Box 1450
Alexandria, VA 22313-1450
www.uspto.gov

THE GOODYEAR TIRE & RUBBER COMPANY
DEPARTMENT 823
1144 EAST MARKET STREET
AKRON OH 44316-0001

COPY MAILED

APR 14 2005

OFFICE OF PETITIONS

In re Application of
Noelle Elizabeth Russell et al.
Application No. 29/201,005
Filed: March 9, 2004
Attorney Docket No. DN2004-028

: DECISION ACCORDING STATUS
: UNDER 37 CFR 1.47(a)

This decision is in response to the request for reconsideration filed April 6, 2005, under 37 CFR 1.47(a), in response to the decision mailed February 24, 2005, dismissing the petition filed March 9, 2004 and supplemented May 24, 2004.

The petition is **GRANTED**.

The above-identified application was filed on March 9, 2004, but without a signed declaration. A Petition was filed with the application but the petition was incomplete and thus was not addressed on the merits. Accordingly, on May 11, 2004, a "Notice To File Missing Parts of Application" was mailed, requiring *inter alia* a properly executed oath or declaration. In response, on May 24, 2004, a petition was filed with an oath or declaration executed by all of the joint inventors except Billy Joe Ratliff Jr., but was dismissed because an oath or declaration with Mr. Ratliff's name on it and a statement of his last known address had not been provided.

A grantable petition under 37 CFR 1.47(a) requires: (1) proof that the non-signing inventor cannot be reached or refuses to sign the oath or declaration after having been presented with the application papers (specification, claims and drawings); (2) an acceptable oath or declaration in compliance with 35 U.S.C. §§ 115 and 116; (3) the petition fee; and (4) a statement of the last known address of the non-signing inventor. The above-identified application and papers have been reviewed and found in compliance with 37 CFR 1.47(a). In view thereof, this application is hereby accorded Rule 1.47(a) status.

In response to the decision dismissing the petition filed March 9, 2004 and supplemented May 24, 2004, the instant request for reconsideration provides an oath or declaration bearing joint inventor Billy Joe Ratliff, Jr.'s name and a statement of his last known address.

All requirements under 37 CFR 1.47(a) therefore having been met, as provided in Rule

1.47(c), this Office will forward notice of this application's filing to the non-signing inventor at the address given in the petition. Notice of the filing of this application will also be published in the Official Gazette.

This application is being forwarded to Technology Center 2913 for examination in due course.

Telephone inquiries related to this decision should be directed to the undersigned Petitions Attorney at (571) 272-3212.

Patricia Faison-Ball

Patricia Faison-Ball
Senior Petitions Attorney
Office of Petitions

UNITED STATES PATENT AND TRADEMARK OFFICE

Commissioner for Patents
United States Patent and Trademark Office
P.O. Box 1450
Alexandria, VA 22313-1450
www.uspto.gov

BILLY JOE RATLIFF JR.
5130 WHITLOW COURT
COMMERCE TOWNSHIP, MI 48382

COPY MAILED

APR 14 2005

OFFICE OF PETITIONS

In re Application of
Noelle Elizabeth Russell et al.
Application No. 29/201,005
Filed: March 9, 2004
For: TIRE TREAD

Dear Mr. Ratliff:

You are named as a joint inventor in the above identified United States patent application, filed under the provisions of 35 U.S.C. 116 (United States Code), and 37 CFR 1.47(a), Rules of Practice in Patent Cases. Should a patent be granted on the application you will be designated therein as a joint inventor.

As a named inventor you are entitled to inspect any paper in the file wrapper of the application, order copies of all or any part thereof (at a prepaid cost per 37 CFR 1.19) or make your position of record in the application. Alternatively, you may arrange to do any of the preceding through a registered patent attorney or agent presenting written authorization from you. If you care to join the application, counsel of record (see below) would presumably assist you. Joining in the application would entail the filing of an appropriate oath or declaration by you pursuant to 37 CFR 1.63.

Telephone inquiries regarding this communication should be directed to the undersigned Petitions Attorney at (571) 272-3212. Requests for information regarding your application should be directed to the File Information Unit at 703/308-2733. Information regarding how to pay for and order a copy of the application, or a specific paper in the application, should be directed to Certification Division at 703/308-9726 or 1-800-972-6382 (outside the Washington D.C. area).

Patricia Faison-Ball
Senior Petitions Attorney
Office of Petitions

cc:
THE GOODYEAR TIRE & RUBBER COMPANY
DEPARTMENT 823
1144 EAST MARKET STREET
AKRON OH 44316-0001

UNITED STATES PATENT AND TRADEMARK OFFICE

Commissioner for Patents
United States Patent and Trademark Office
P.O. Box 1450
Alexandria, VA 22313-1450
www.uspto.gov

DYKEMA GOSSETT PLLC
FRANKLIN SQUARE, THIRD FLOOR WEST
1300 I STREET NW
WASHINGTON, DC 20005

COPY MAILED

AUG 3 1 2006

OFFICE OF PETITIONS

In re Patent No. D516,216	:	
Issue Date: February 28, 2006	:	
Application No. 29/201,057	:	ON PETITION
Filed: March 10, 2004	:	
Attorney Docket No. 66457-204-7	:	

This is a decision on the request, filed March 20, 2006, under 37 CFR 3.81(b) to include Phonak Holding AG of Stäfa, Switzerland, as the assignee on the front page of the above-identified patent by way of a Certificate of Correction.

The petition is **GRANTED**.

The matter is being referred to the Certificates of Correction Branch for issuance of the requested Certificate of Correction.

Telephone inquiries concerning this decision may be directed to the undersigned at (571) 272-3218. Inquiries regarding the issuance of a certificate of correction should be directed to the Certificate of Correction Branch at (571) 272-4200.

Frances Hicks
Petitions Examiner
Office of Petitions

UNITED STATES PATENT AND TRADEMARK OFFICE

Commissioner for Patents
United States Patent and Trademark Office
P.O. Box 1450
Alexandria, VA 22313-1450
www.uspto.gov

Timothy J. Klima
Harbin King & Klima
500 Ninth Street SE
Washington, DC 20003

COPY MAILED

APR 1 8 2008

OFFICE OF PETITIONS

In re Application of :
Igino Conti, et. al. :
Application No. 29/201,087 : ON PETITION
Filed: March 11, 2004 :
Attorney Docket No. 2545-0443 :

This is a decision on the petition under 37 CFR 1.137(b), filed on January 8, 2007 and July 5, 2007, to revive the above-identified application.

The petition is **DISMISSED**.

The above-identified application became abandoned for failure to timely respond to the Notice of Allowance and Fee(s) Due mailed October 5, 2006. A Notice of Abandonment was mailed on May 9, 2007.

A grantable petition under 37 CFR 1.137(b) must be accompanied by: (1) the required reply, unless previously filed; (2) the petition fee as set forth in 37 CFR 1.17(m); (3) a statement that the entire delay in filing the required reply from the due date for the reply until the filing of a grantable petition pursuant to 37 CFR 1.137(b) was unintentional; and (4) any terminal disclaimer (and fee as set forth in 37 CFR 1.20(d)) required by 37 CFR 1.137(d). Where there is a question as to whether either the abandonment or the delay in filing a petition under 37 CFR 1.137 was unintentional, the Commissioner may require additional information. See MPEP 711.03(c)(III)(C) and (D). The instant petition lacks item(s) (4).

The Office acknowledges receipt of $1,500 for the petition to revive fee, $800 for payment of the issue fee and $12 for four (4) advance order soft copies filed on January 8, 2007. However, a Terminal Disclaimer and $130 fee is required under 37 CFR 1.137(d) if the application is: (1) a design application, (2) a utility application filed before June 8, 1995, or (3) a plant application filed before June 8, 1995. The Terminal Disclaimer must dedicate to the public a terminal part of the term of any patent granted the application equivalent to the period of abandonment of the application, and must also apply to any patent granted on any application containing a specific reference under 35 U.S.C. 120, 121 or 365(c) to the application for which revival is sought.

Any request for reconsideration of this decision must be submitted within **TWO (2) MONTHS** from the mail date of this decision. Extensions of time under 37 CFR 1.136(a) is permitted. The reconsideration request should include a cover letter entitled "Renewed Petition under 37 CFR 1.137(b), and be accompanied by the required Terminal Disclaimer and $130 fee." This is **not** a final agency action within the meaning of 5 U.S.C. § 704.

Further correspondence with respect to this matter should be addressed as follows:

By mail: Mail Stop PETITION
Commissioner for Patents
P. O. Box 1450
Alexandria, VA 22313-1450

By hand: U. S. Patent and Trademark Office
Customer Service Window, Mail Stop Petitions
Randolph Building
401 Dulany Street
Alexandria, VA 22314

The centralized facsimile number is **(571) 273-8300.**

Telephone inquiries concerning this decision should be directed to the undersigned at (571) 272-3226.

Andrea Smith
Petitions Examiner
Office of Petitions

UNITED STATES PATENT AND TRADEMARK OFFICE

Commissioner for Patents
United States Patent and Trademark Office
P.O. Box 1450
Alexandria, VA 22313-1450
www.uspto.gov

Timothy J. Klima
Harbin King & Klima
500 Ninth Street SE
Washington, DC 20003

COPY MAILED

OCT 28 2008

OFFICE OF PETITIONS

In re Application of	:	
Igino Conti, et. al.	:	
Application No. 29/201,087	:	ON PETITION
Filed: March 11, 2004	:	
Attorney Docket No. 2545-0443	:	

This is a decision on the renewed petition under 37 CFR 1.137(b), filed on June 18, 2008, to revive the above-identified application.

The petition satisfies the requirements of 37 CFR 1.137(b) in that petitioner has supplied (1) the reply in the form of $800 for payment of the issue fee and a terminal disclaimer along with $130 fee; (2) the petition fee of $1,500 and (3) a proper statement of unintentional delay. Therefore, the petition is **GRANTED**.

The terminal disclaimer under 37 CFR 1.137(d), filed June 18, 2008, has been accepted and made of record. Any continuing application filed from this application must contain a copy of the terminal disclaimer. The copy of the terminal disclaimer must be filed with a cover letter requesting the terminal disclaimer be recorded on the continuing application. A copy of this decision should be attached to the cover letter.

This application file is being referred to the Office of Data Management to be processed into a patent.

Telephone inquiries concerning this decision should be directed to the undersigned at (571) 272-3226.

Andrea Smith
Petitions Examiner
Office of Petitions

UNITED STATES PATENT AND TRADEMARK OFFICE

COMMISSIONER FOR PATENTS
UNITED STATES PATENT AND TRADEMARK OFFICE
P.O. BOX 1450
ALEXANDRIA, VA 22313-1450
www.uspto.gov

Jeffrey J. Phillips
750 Bering Drive
Houston, TX 77057-2198

COPY MAILED

DEC 29 2005

OFFICE OF PETITIONS

In re Application of
Springer
Application No. 29/201,103
Filed: March 10, 2004
Docket No.: 10774.0035.NPUS00

DECISION ON PETITION

This is a decision on the petition under 37 CFR 1.137(b), filed November 25, 2005, to revive the above-identified application.

The petition is **GRANTED**.

This application became abandoned June 8, 2005 for failure to timely submit the issue fee in response to the Notice of Allowance and Issue Fee(s) Due ("Notice") mailed March 7, 2005. The Notice set a three month statutory period for reply. Notice of Abandonment was mailed August 22, 2005.

A grantable petition pursuant to 37 C.F.R. § 1.137(b) must be accompanied by: (1) the required reply to the outstanding Office action or notice, unless previously filed; (2) the petition fee as set forth in 37 C.F.R. § 1.17(m); (3) a statement that the entire delay in filing the required reply from the due date for the reply until the filing of a grantable petition pursuant to 37 C.F.R. § 1.137(b) was unintentional; and (4)any terminal disclaimer (and fee set forth in 37 C.F.R. § 1.20(d)) required pursuant to 37 C.F.R. § 1.137(c).

The instant petition has been reviewed and found in compliance with the provisions of 37 CFR 1.137(b). Accordingly, the failure to timely submit a proper reply to the Notice is accepted as having been unintentionally delayed.

There is no indication that petitioner herein was ever empowered to prosecute the instant application. If petitioner desires to receive future correspondence regarding this application, the appropriate power of attorney documentation must be submitted. A courtesy copy of this decision will be mailed to petitioner. However, all future correspondence will be directed to the address of record until such time as appropriate instructions are received to the contrary.

The change of correspondence address submitted herewith has not been entered into the record as it has not been executed by applicant.

Application No. 29/201,103

Furthermore, it is not apparent whether the person signing the statement of unintentional delay was in a position to have firsthand or direct knowledge of the facts and circumstances of the delay at issue. Nevertheless, such statement is being treated as having been made as the result of a reasonable inquiry into the facts and circumstances of such delay. In the event that such an inquiry has not been made, petitioner must make such an inquiry. If such inquiry results in the discovery that the delay in paying the maintenance fee under 37 CFR 1.378(c) was intentional, petitioner must notify the Office.

This application will be forwarded to the Publications Division for further processing.

Telephone inquiries concerning this matter may be directed to the undersigned at (571) 272-3205.

Alesia M. Brown
Petitions Attorney
Office of Petitions

CC: LOCKE LIDDELL & SAPP LLP
ATTN. DOCKETING
600 TRAVIS #3400
HOUSTON, TX 77002

UNITED STATES PATENT AND TRADEMARK OFFICE

Commissioner for Patents
United States Patent and Trademark Office
P.O. Box 1450
Alexandria, VA 22313-1450
www.uspto.gov

MACMILLAN SOBANSKI & TODD, LLC
ONE MARITIME PLAZA FOURTH FLOOR
720 WATER STREET
TOLEDO, OH 43604-1619

COPY MAILED

JAN 28 2005

OFFICE OF PETITIONS

In re Application of :
Charles F. Smiley et al :
Application No. 29/201,138 : ON PETITION
Filed: March 10, 2004 :
Attorney Docket No. 1-25706

This is a decision on the petition, filed January 27, 2005, under 37 CFR 1.313(c)(3) to withdraw the above-identified application from issue after payment of the issue fee.

The petition is **GRANTED**.

The above-identified application is withdrawn from issue for express abandonment in favor of a continuing application. See 37 CFR 1.313(c)(3).

The application is hereby withdrawn from issue, and the abandonment is hereby recognized.

Telephone inquiries should be directed to Irvin Dingle at (571) 272-3210.

Irvin Dingle
Petitions Examiner
Office of Petitions
Office of the Deputy Commissioner
for Patent Examination Policy

UNITED STATES PATENT AND TRADEMARK OFFICE

Commissioner for Patents
United States Patent and Trademark Office
P.O. Box 1450
Alexandria, VA 22313-1450
www.uspto.gov

THE PROCTER & GAMBLE COMPANY
Global Legal Department - IP
Sycamore Building - 4th Floor
299 East Sixth Street
CINCINNATI OH 45202

COPY MAILED
SEP 1 1 2008

In re Application of	:	
Gerhard Robert Willi Seizer et al.	:	
Application No. 29/201,153	:	DECISION ON PETITION
Filed: March 11, 2004	:	
Patent No. D505,865	:	
Issued: June 7, 2005	:	
Attorney Docket No. AD126&	:	

This is a decision on the request under 37 CFR 3.81(b)[1] filed November 14, 2007 to correct the name of the assignee on the front page of the above-identified patent by way of a Certificate of Correction.

The request is **GRANTED**..

Petitioner indicates that the correct assignees are both The Procter & Gamble Company and Matsushita Electric Works, LTD., and that Matsushita Electric Works, Ltd. was incorrectly omitted from the Fee(s) Transmittal form PTOL-85(b) at the time of payment of the issue fee. Accordingly, petitioner requests that a certificate of correction be issued to reflect the correct assignees on the front page of the Letters Patent in the patent to be issued from the application.

37 CFR 3.81(b), effective June 25, 2004, reads:

> *After payment of the issue fee:* Any request for issuance of an application in the name of the assignee submitted after the date of payment of the issue fee, and any request for a patent to be corrected to state the name of the assignee, must state that the assignment was submitted for recordation as set forth in § 3.11 before issuance of the patent, and must include a request for a certificate of correction under § 1.323 of this chapter (accompanied by the fee set forth in § 1.20(a) and the processing fee set forth in § 1.17(i) of this chapter.

---

[1] *See* MPEP 1309, subsection II; and Official Gazette of June 22, 2004.

The request was accompanied by a certificate of correction (and fee) as required by 3.81(b). Further, Office assignment records reflect that The Procter & Gamble Company and Matsushita Electric Works, LTD. are the assignees of record, which assignment was submitted for recordation as set forth in § 3.11 before issuance of the patent. Accordingly, as the request complies with the provisions of 37 CFR 3.81(b), it would be appropriate for a certificate of correction to be processed after issuance of this application into a patent.

Also, the processing fee set forth in § 1.17(i) ($130.00) has been charged to Deposit Account No. 16-2480 as authorized in the petition.

Telephone inquiries concerning this decision should be directed to Christopher Bottorff at (571) 272-6692. Inquiries regarding the issuance of a certificate of correction should be directed to the Certificate of Correction Branch at (571) 272-4200.

The Certificates of Correction Branch will be notified of this decision granting the petition under 37 CFR 3.81(b) and directing issuance of the requested Certificate of Correction.

Christopher Bottorff
Petitions Examiner
Office of Petitions

UNITED STATES PATENT AND TRADEMARK OFFICE

Commissioner for Patents
United States Patent and Trademark Office
P.O. Box 1450
Alexandria, VA 22313-1450
www.uspto.gov

JUN 2 1 2004

BANNER & WITCOFF
1001 G STREET N W
SUITE 1100
WASHINGTON DC 20001

In re Application of	:	
Jean Francois Fullum	:	
Serial No.: 29/201,165	:	DECISION ON PETITION
Filed: March 12, 2004	:	
For: Portion Of A Shoe Upper	:	

This is in response to the petition applicant filed on May 20, 2004 to make the above-identified application special under the provisions of 37 CFR 1.102(d).

Applicant has satisfied the provisions set forth in M.P.E.P. 708.02, VIII, thus the petition is **GRANTED**.

The application will be forwarded to the examiner for action on the merits commensurate with this decision.

Should there be any questions with regard to this letter please contact John Kittle by letter addressed to the Director, Technology Center 3700/2900, P.O. Box 1450 Alexandria, VA 22313-1450, or by telephone at (703) 308-0873 or by facsimile transmission at (703) 308-3139.

John E. Kittle

John E. Kittle
Director
Technology Center 3700/2900

UNITED STATES PATENT AND TRADEMARK OFFICE

Commissioner for Patents
United States Patent and Trademark Office
P.O. Box 1450
Alexandria, VA 22313-1450
www.uspto.gov

JUN 28 2004

BANNER & WITCOFF
1001 G STREET N W
SUITE 1100
WASHINGTON DC 20001

In re Application of	:	
Jean Francois Fullum	:	
Serial No.: 29/201,165	:	DECISION ON PETITION
Filed: March 12, 2004	:	
For: Portion of a Shoe Upper	:	

This is in response to the petition applicant filed on May 20, 2004 to make the above-identified application special under the provisions of 37 CFR 1.102(d).

Applicant has satisfied the provisions set forth in M.P.E.P. 708.02, VIII, thus the petition is **GRANTED**.

The application will be forwarded to the examiner for action on the merits commensurate with this decision.

Should there be any questions with regard to this letter please contact John Kittle by letter addressed to the Director, Technology Center 3700/2900, P.O. Box 1450 Alexandria, VA 22313-1450, or by telephone at (703) 308-0873 or by facsimile transmission at (703) 308-3139.

John E. Kittle

John E. Kittle
Director
Technology Center 3700/2900

UNITED STATES PATENT AND TRADEMARK OFFICE

Commissioner for Patents
United States Patent and Trademark Office
P.O. Box 1450
Alexandria, VA 22313-1450
www.uspto.gov

SEP 17 2004

BANNER & WITCOFF
1001 G STREET N W
SUITE 1100
WASHINGTON DC 20001

In re Application of	:	
John Hlavacs	:	
Serial No.: 29/201,166	:	DECISION ON PETITION
Filed: March 12, 2004	:	
For: Portion of a Shoe Upper	:	

This is in response to the petition applicant filed on June 14, 2004 to make the above-identified application special under the provisions of 37 CFR 1.102(d).

Applicant has satisfied the provisions set forth in M.P.E.P. 708.02, VIII, thus the petition is **GRANTED**.

The application will be forwarded to the examiner for action on the merits commensurate with this decision.

Should there be any questions with regard to this letter please contact John Kittle by letter addressed to the Director, Technology Center 3700/2900, P.O. Box 1450 Alexandria, VA 22313-1450, or by telephone at (703) 308-0873 or by facsimile transmission at (703) 308-3139.

John E. Kittle

John E. Kittle
Director
Technology Center 3700/2900

UNITED STATES PATENT AND TRADEMARK OFFICE

Commissioner for Patents
United States Patent and Trademark Office
P.O. Box 1450
Alexandria, VA 22313-1450
www.uspto.gov

MAY 20 2004

BANNER & WITCOFF
ELEVENTH FLOOR
1001 G STREET N W
WASHINGTON DC 20001

In re Application of	:	
Martin M. Lotti	:	
Serial No.: 29/201,167	:	DECISION ON PETITION
Filed: March 12, 2004	:	
For: Portion Of A Shoe Upper	:	

This is in response to the petition applicant filed on April 16, 2004 to make the above-identified application special under the provisions of 37 CFR 1.102(d).

Applicant has satisfied the provisions set forth in M.P.E.P. 708.02, VIII, thus the petition is **GRANTED**.

The application will be forwarded to the examiner for action on the merits commensurate with this decision.

Should there be any questions with regard to this letter please contact John Kittle by letter addressed to the Director, Technology Center 3700/2900, P.O. Box 1450 Alexandria, VA 22313-1450, or by telephone at (703) 308-0873 or by facsimile transmission at (703) 308-3139.

John E. Kittle

John E. Kittle
Director
Technology Center 3700/2900

UNITED STATES PATENT AND TRADEMARK OFFICE

Commissioner for Patents
United States Patent and Trademark Office
P.O. Box 1450
Alexandria, VA 22313-1450
www.uspto.gov

AUG 2 4 2004

BANNER & WITCOFF
ELEVENTH FLOOR
1001 G STREET N W
WASHINGTON DC 20001

In re Application of	:	
Peter M. Fogg	:	
Serial No.: 29/201,168	:	DECISION ON PETITION
Filed: March 12, 2004	:	
For: Portion Of A Shoe Upper	:	

This is in response to the petition applicant filed on July 12, 2004 to make the above-identified application special under the provisions of 37 CFR 1.102(d).

Applicant has satisfied the provisions set forth in M.P.E.P. 708.02, VIII, thus the petition is **GRANTED**.

The application will be forwarded to the examiner for action on the merits commensurate with this decision.

Should there be any questions with regard to this letter please contact John Kittle by letter addressed to the Director, Technology Center 3700/2900, P.O. Box 1450 Alexandria, VA 22313-1450, or by telephone at (703) 308-0873 or by facsimile transmission at (703) 308-3139.

John E. Kittle
Director
Technology Center 3700/2900

UNITED STATES PATENT AND TRADEMARK OFFICE

Commissioner for Patents
United States Patent and Trademark Office
P.O. Box 1450
Alexandria, VA 22313-1450
www.uspto.gov

JUN 2 1 2004

BANNER & WITCOFF
1001 G STREET N W
SUITE 1100
WASHINGTON DC 20001

In re Application of	:	
Kenneth Link	:	
Serial No.: 29/201,169	:	DECISION ON PETITION
Filed: March 12, 2004	:	
For: Portion Of A Shoe Upper	:	

This is in response to the petition applicant filed on May 21, 2004 to make the above-identified application special under the provisions of 37 CFR 1.102(d).

Applicant has satisfied the provisions set forth in M.P.E.P. 708.02, VIII, thus the petition is **GRANTED**.

The application will be forwarded to the examiner for action on the merits commensurate with this decision.

Should there be any questions with regard to this letter please contact John Kittle by letter addressed to the Director, Technology Center 3700/2900, P.O. Box 1450 Alexandria, VA 22313-1450, or by telephone at (703) 308-0873 or by facsimile transmission at (703) 308-3139.

John E. Kittle

John E. Kittle
Director
Technology Center 3700/2900

UNITED STATES PATENT AND TRADEMARK OFFICE

Commissioner for Patents
United States Patent and Trademark Office
P.O. Box 1450
Alexandria, VA 22313-1450
www.uspto.gov

COPY MAILED

MAR 0 2 2007

OFFICE OF PETITIONS

CASELLA & HESPOS
274 MADISON AVENUE
NEW YORK NY 10016

In re Application of
Mary Fitzgerald
Application No. 29/201,194
Filed: March 10, 2004
Attorney Docket No. FITZGERALD-1

ON PETITION

This is a decision on the petition under the unintentional provisions of 37 CFR 1.137(b), filed August 24, 2006, to revive the above-identified application.

The petition is **DISMISSED**.

Any request for reconsideration of this decision must be submitted within TWO (2) MONTHS from the mail date of this decision. Extensions of time under 37 CFR 1.136(a) are permitted. The reconsideration request should include a cover letter entitled "Renewed Petition under 37 CFR 1.137(b)." This is **not** a final agency action within the meaning of 5 U.S.C. § 704.

The application became abandoned for failure s to timely pay the issue on or before August 17, 2006, as required by the Notice of Allowance and Fee(s) Due, mailed May 17, 2006, which set a statutory period for reply of three (3) months. Accordingly, the application became abandoned on August 18, 2006.

A grantable petition under 37 CFR 1.137(b) must be accompanied by: (1) the required reply, unless previously filed; (2) the petition fee as set forth in 37 CFR 1.17(m); (3) a statement that the entire delay in filing the required reply from the due date for the reply until the filing of a grantable petition pursuant to 37 CFR 1.137(b) was unintentional; and (4) any terminal disclaimer (and fee as set forth in 37 CFR 1.20(d)) required by 37 CFR 1.137(d). Where there is a question as to whether either the abandonment or the delay in filing a petition under 37 CFR 1.137 was unintentional, the Director may require additional information. See MPEP 711.03(c)(II)(C) and (D). The instant petition lacks item(s) (4).

Since the above-identified application is a design application it requires a terminal disclaimer.

Further correspondence with respect to this matter should be addressed as follows:

By Mail: Mail Stop PETITION
Commissioner for Patents
P. O. Box 1450
Alexandria, VA 22313-1450

By hand: U. S. Patent and Trademark Office
Customer Service Window, Mail Stop Petitions
Randolph Building
401 Dulany Street
Alexandria, VA 22314

The centralized facsimile number is **(571) 273-8300.**

Telephone inquiries concerning this decision should be directed to Terri Williams at (571) 272-2991.

Liana Walsh
Petitions Examiner
Office of Petitions

UNITED STATES PATENT AND TRADEMARK OFFICE

Commissioner for Patents
United States Patent and Trademark Office
P.O. Box 1450
Alexandria, VA 22313-1450
www.uspto.gov

CASELLA & HESPOS
274 MADISON AVENUE
NEW YORK NY 10016

COPY MAILED
MAR 23 2007
OFFICE OF PETITIONS

In re Application of	:	
Mary Fitzgerald	:	
Application No. 29/201,194	:	DECISION ON PETITION
Filed: March 10, 2004	:	
Attorney Docket No. FITZGERALD-1	:	

CORRECTED DECISION

This is a decision on the petition under the unintentional provisions of 37 CFR 1.137(b), filed August 24, 2006, to revive the above-identified application.

The petition is **GRANTED**.

This application became abandoned for failure to timely pay the issue fee on or before August 17, 2006, as required by the Notice of Allowance and Fee(s) Due, mailed May 17, 2006. Accordingly, the date of abandonment of this application is August 18, 2006.

The petition satisfies the requirements of 37 CFR 1.137(b) in that petitioner has supplied (1) the reply in the form of payment of the issue fee of $400, (2) the petition fee of $750; and (3) a proper statement of unintentional delay.

Telephone inquiries concerning this decision should be directed to Terri Williams at (571) 272-2991.

This application is being referred to Publishing Division for processing into a patent.

Liana Walsh
Petitions Examiner
Office of Petitions

UNITED STATES PATENT AND TRADEMARK OFFICE

Commissioner for Patents
United States Patent and Trademark Office
P.O. Box 1450
Alexandria, VA 22313-1450
www.uspto.gov

COPY MAILED

NOV 29 2007

OFFICE OF PETITIONS

HAYNES AND BOONE LLP
901 MAIN STREET
SUITE 3100
DALLAS TX 75202

In re Application of	:	
Frank Blateri	:	
Application No. 29/201,230	:	DECISION ON PETITION
Filed: March 11, 2004	:	
Attorney Docket No. 23695.326	:	

This is a decision on the "SECOND REQUEST FOR CORRECTION OF PATENT OFFICE RECORDS AND WITHDRAWAL OF HOLDING OF ABANDONMENT", filed January 3, 2007.

The petition is **GRANTED.**

Applicant filed a petition to withdraw the holding of abandonment, incorrectly listing the serial number as 29/201,206. However, the Office was able to match the petition with the above, intended application. The petition was granted in a decision mailed on February 24, 2006. However, the decision was mailed in application no. 29/201,206, not 29/201,230. As such, the status of the above application remained abandoned, prompting applicant to file the instant petition.

In view thereof, **the holding of abandonment is withdrawn.**

The matter is being forwarded to Group Art Unit 2911 for consideration of the response filed April 11, 2005, a copy of which has been supplied with the instant petition.

Telephone inquiries regarding this decision should be directed to the undersigned at (571)272-3207.

Cliff Congo
Petitions Attorney
Office of Petitions

UNITED STATES PATENT AND TRADEMARK OFFICE

Commissioner for Patents
United States Patent and Trademark Office
P.O. Box 1450
Alexandria, VA 22313-1450
www.uspto.gov

9/22/05

H. MICHAEL BRUCKER
SUITE 110
5855 DOYLE STREET
EMERYVILLE, CA 94608

In re Application of
Sun Hui Chang
Serial No.: 29/201,249
Filed: March 10, 2004
Attorney Docket No.: Chang 0402

: PETITION DECISION

This is a decision on applicant's Petition to Revive under 37 CFR 1.181 received August 22, 2005, due to non-response of office action.

This application became abandoned for failure to respond to the Office action mailed January 5, 2005, which set a one-month shortened statutory period to respond. As no response was received by February 7, 2005, a Notice of Abandonment was mailed August 16, 2005. Applicant then filed this petition.

Applicant has submitted copies of the response with a Certificate of Mailing date of January 25, 2005 and a post card receipt. Therefore, as the response was timely filed, the case will be returned to pending status.

Applicant's petition is **GRANTED.**

The application will be forwarded to the Examiner for evaluation of applicant's response in due course.

Should there be any questions with respect to this decision, please contact Sandra Morris; by mail addressed to: Director, Technology Center 1700/2900, P.O. Box 1450, Alexandria, VA 22313-1450; or by telephone at (571) 272-2622.

Jacqueline M. Stone

Jacqueline Stone
Director, Technology Center 1700/2900

UNITED STATES PATENT AND TRADEMARK OFFICE

Commissioner for Patents
United States Patent and Trademark Office
P.O. Box 1450
Alexandria, VA 22313-1450
www.uspto.gov

Paper No.

H. Michael Brucker
Suite 110
5855 Doyle Street
Emeryville, CA 94608

COPY MAILED

JUN 21 2006

OFFICE OF PETITIONS

In re Application of	:	
Sun Hui Chang	:	DECISION ON PETITION
Application No. 29/201,249	:	
Filed: March 10, 2004	:	
Attorney Docket No. 6920	:	

This is a decision on the "PETITION UNDER 37 C.F.R. 1.181 TO WITHDRAW HOLDING OF ABANDONMENT," filed April 13, 2006.

The petition under § 1.181 is **DISMISSED**.

Any request for reconsideration pursuant to § 1.181 must be filed within **TWO (2) MONTHS** of the date of this decision in order to be considered timely. See 37 CFR §1.181(f).

The above-identified application became abandoned for failure to timely file corrected drawings in response to the "Notice of Allowability" mailed November 4, 2005. This Office action set a three-month non-extendable statutory period for reply. No reply having been received, the above-identified application became abandoned on February 5, 2006. A courtesy Notice of Abandonment was mailed on March 20, 2006.

Petitioner asserts that the Notice of Allowability was not received. Petitioner acknowledges receipt of the Notice of Allowance, but states that no Notice of Allowability accompanied the Notice of Allowance. In support thereof, petitioner cites their application file as establishing that only the Notice of Allowance was received as a thorough examination of their file

confirmed that it was not present therein and thus, was not received.

Petitioner's evidence is not persuasive. It is well-established Office practice that the Notice of Allowability is mailed with the Notice of Allowance. The Official record of the application supports a conclusion that this practice was followed in this instance. Both a Notice of Allowance and a Notice of Allowability dated November 4, 2005 are present in the Image File Wrapper of this application. There is no evidence that upon receipt of the Notice of Allowance that applicants contacted the Office to assert the lack of receipt of the Notice of Allowability.

Further, given Office practice, it is unclear why a registered practitioner having not received a Notice of Allowability would respond to the Notice of Allowance without questioning the absence of the Notice of Allowability.

Under the circumstances, it is concluded that withdrawal of the holding of abandonment is not warranted.

Applicant may submit a petition to revive pursuant to § 1.137(a) or § 1.137(b). On petition to revive of a design application, a terminal disclaimer (and disclaimer fee) is required.

Further correspondence with respect to this decision should be addressed as follows:

By mail: Mail Stop Petition
Commissioner for Patents
P.O. Box 1450
Alexandria, VA 22313-1450

By fax: (571) 273-8300
ATTN: Office of Petitions

By hand: Customer Service Window
Randolph Building
401 Dulany Street
Alexandria, VA 22314

Telephone inquiries concerning this decision should be directed to the undersigned at (571) 272-3219.

Nancy Johnson
Senior Petitions Attorney
Office of Petitions

UNITED STATES PATENT AND TRADEMARK OFFICE

Commissioner for Patents
United States Patent and Trademark Office
P.O. Box 1450
Alexandria, VA 22313-1450
www.uspto.gov

Paper No.

H. Michael Brucker
Suite 110
5855 Doyle Street
Emeryville, CA 94608

COPY MAILED

AUG 0 1 2006

OFFICE OF PETITIONS

In re Application of	:	
Sun Hui Chang	:	DECISION ON PETITION
Application No. 29/201,249	:	
Filed: March 10, 2004	:	
Attorney Docket No. 6920	:	

This is a decision on the "PETITION FOR REVIVAL OF AN APPLICATION FOR PATENT ABANDONED UNINTENTIONALLY UNDER 37 CFR 1.137(b)," filed June 30, 2006.

The petition is **GRANTED**.

The above-identified application became abandoned for failure to timely file corrected drawings in response to the "Notice of Allowability" mailed November 4, 2005. A courtesy Notice of Abandonment was mailed on March 20, 2006. By decision mailed June 21, 2006, a petition to withdraw the holding of abandonment filed April 13, 2006 was dismissed.

The initial petition included the required reply in the form of a corrected drawing sheet (1/10)[1]. On instant petition for revival, petitioner submitted payment of the issue fee, payment of the petition fee, the required statement of unintentional delay and a terminal disclaimer (and fee).

---

[1] Drawing Figs. 4-14 filed on March 10, 2005 and drawing Figures 2+3 filed on June 22, 2005 are accepted by the Examiner. See Notice of Allowability mailed November 4, 2005.

The Office of Patent Publication has been advised of this decision. The application is, thereby, forwarded to the Publishing Division for processing into a patent.

Telephone inquiries concerning this decision should be directed to the undersigned at (571) 272-3219.

Nancy Johnson
Senior Petitions Attorney
Office of Petitions

UNITED STATES PATENT AND TRADEMARK OFFICE

Commissioner for Patents
United States Patent and Trademark Office
P.O. Box 1450
Alexandria, VA 22313-1450
www.uspto.gov

SAND & SEBOLT
AEGIS TOWER, SUITE 1100
4940 MUNSON STREET, NW
CANTON OH 44718-3615

COPY MAILED

OCT 26 2004

OFFICE OF PETITIONS

In re Application of
Frank H. Copen et al.
Application No. 29/201,301
Filed: March 12, 2004
Attorney Docket No. 1796031US2AD

: DECISION REFUSING STATUS
: UNDER 37 CFR 1.47(b)

This is in response to the petition filed September 20, 2004, under 37 CFR 1.47(b).

The petition is **DISMISSED**.

Rule 47 applicant is given TWO MONTHS from the mailing date of this decision to reply, correcting the below-noted deficiencies. Any reply should be entitled "Request for Reconsideration of Petition Under 37 CFR 1.47(b)," and should only address the deficiencies noted below, except that the reply may include an oath or declaration executed by the non-signing inventor. **FAILURE TO RESPOND WILL RESULT IN ABANDONMENT OF THE APPLICATION**. Extensions of time may be obtained in accordance with 37 CFR 1.136(a).

The above-identified application was filed on March 12, 2004 without an executed oath or declaration.

Accordingly, on May 13, 2004, a "Notice To File Missing Parts of Nonprovisional Application" was mailed, requiring an executed oath or declaration and a surcharge for the late filing of the oath or declaration.

In response, on September 20, 2004, the present petition was filed, accompanied by the late filing surcharge and a three (3) month extension of time.

A grantable petition under 37 CFR 1.47(b) requires:

(1) proof that the non-signing inventor cannot be reached or refuses to sign the oath or declaration after having been presented with the application papers (specification, claims and drawings);

(2) an acceptable oath or declaration in compliance with 35 U.S.C. §§ 115 and 116;
(3) the petition fee;
(4) a statement of the last known address of the non-signing inventor;
(5) proof of proprietary interest, and
(6) proof of irreparable damage.

The petition lacks items (2).

As to item (2), an oath or declaration for the patent application in compliance with 37 CFR 1.63 and 1.64 has not been presented. A declaration in compliance with 37 CFR 1.63, 1.64, and 1.67 must be presented, signed by all of the signing inventors, if any. If no inventor(s) will sign the declaration, the declaration may be signed on behalf of the inventor by an assignee. The oath or declaration must be signed by an officer of the corporation (president, vice president, secretary, or treasurer) on behalf of and as agent for the non-signing inventor(s). The officer must identify his/her title in the declaration, as well as his/her mailing address, residence, if the applicant lives at a different location from where he or she customarily receives mail, as well as the citizenship of individual signing on behalf of the non-signing inventor. If the oath or declaration is not signed by an officer of the corporation, then proof of authority of the person signing on behalf of the corporation must be submitted.[1]

Further correspondence with respect to this matter should be addressed as follows:

By mail: Mail Stop Petition
Commissioner for Patents
P.O. Box 1450
Alexandria, VA 22313-1450

By FAX: (703) 872-9306

Telephone inquiries concerning this matter may be directed to the undersigned Petitions Attorney at (571) 272-3212.

Patricia Faison-Ball

Patricia Faison-Ball
Senior Petitions Attorney
Office of Petitions

---

[1] MPEP 409.03(b).

UNITED STATES PATENT AND TRADEMARK OFFICE

Commissioner for Patents
United States Patent and Trademark Office
P.O. Box 1450
Alexandria, VA 22313-1450
www.uspto.gov

SAND & SEBOLT
AEGIS TOWER, SUITE 1100
4940 MUNSON STREET, NW
CANTON OH 44718-3615

COPY MAILED

DEC 17 2004

OFFICE OF PETITIONS

In re Application of :
Frank H. Copen et al. :
Application No. 29/201,301 : DECISION ACCORDING STATUS
Filed: September 10, 2003 : UNDER 37 CFR 1.47(b)
Attorney Docket No: 1796031US2AD :

This is in response to the renewed petition filed under 37 CFR 1.47(b) on December 6, 2004.

The petition is **GRANTED**.

The above-identified application was filed on March 12, 2004 without an executed oath or declaration. Accordingly, on May 13, 2004, a "Notice To File Missing Parts of Nonprovisional Application" was mailed, requiring an executed oath or declaration and a surcharge for the late filing of the oath or declaration. In response, on September 20, 2004, a petition was filed, accompanied by the late filing surcharge and a three (3) month extension of time. On October 26, 2004, the petition was dismissed because the petitioners failed to show that the registered attorney had the authority to execute the oath or declaration on behalf of the assignee.

A grantable petition under 37 CFR 1.47(a) requires: (1) proof that the non-signing inventor cannot be reached or refuses to sign the oath or declaration after having been presented with the application papers (specification, claims and drawings); (2) an acceptable oath or declaration in compliance with 35 U.S.C. §§ 115 and 116; (3) the petition fee; and (4) a statement of the last known address of the non-signing inventor. The above-identified application and papers have been reviewed and found in compliance with 37 CFR 1.47(a). In view thereof, this application is hereby accorded Rule 1.47(a) status.

In response to the decision dismissing the petition filed September 20, 2004, the instant petition shows the authority by which the registered attorney has to execute the oath or declaration on behalf of the assignee.

All requirements under 37 CFR 1.47(b) therefore having been met, as provided in Rule

1.47(c), this Office will forward notice of this application's filing to the non-signing inventor at the address given in the petition. Notice of the filing of this application will also be published in the Official Gazette.

This application is being forwarded to the Office of Initial Patent Examination for further pre-examination processing.

Telephone inquiries related to this decision should be directed to the undersigned Petitions Attorney at (571) 272-3212.

Patricia Faison-Ball

Patricia Faison-Ball
Senior Petitions Attorney
Office of Petitions

UNITED STATES PATENT AND TRADEMARK OFFICE

Commissioner for Patents
United States Patent and Trademark Office
P.O. Box 1450
Alexandria, VA 22313-1450
www.uspto.gov

SEP 17 2004

TRASK BRITT
P.O. BOX 2550
SALT LAKE CITY UT 84110

In re Application of	:	
Mattthew Najee Rask	:	
Serial No.: 29/201,302	:	DECISION ON PETITION
Filed: March 12, 2004	:	
For: Side Element of a Shoe Upper	:	

This is in response to the petition applicant filed on March 12, 2004 to make the above-identified application special under the provisions of 37 CFR 1.102(d).

Applicant has satisfied the provisions set forth in M.P.E.P. 708.02, VIII, thus the petition is **GRANTED**.

The application will be forwarded to the examiner for action on the merits commensurate with this decision.

Should there be any questions with regard to this letter please contact John Kittle by letter addressed to the Director, Technology Center 3700/2900, P.O. Box 1450 Alexandria, VA 22313-1450, or by telephone at (703) 308-0873 or by facsimile transmission at (703) 308-3139.

John E. Kittle

John E. Kittle
Director
Technology Center 3700/2900

UNITED STATES PATENT AND TRADEMARK OFFICE

Commissioner for Patents
United States Patent and Trademark Office
P.O. Box 1450
Alexandria, VA 22313-1450
www.uspto.gov

SEP 17 2004

TRASK BRITT
P.O. BOX 2550
SALT LAKE CITY UT 84110

In re Application of	:	
Kenneth Link	:	
Serial No.: 29/201,303	:	DECISION ON PETITION
Filed: March 12, 2004	:	
For: Side Element of a Shoe Upper	:	

This is in response to the petition applicant filed on March 12, 2004 to make the above-identified application special under the provisions of 37 CFR 1.102(d).

Applicant has satisfied the provisions set forth in M.P.E.P. 708.02, VIII, thus the petition is **GRANTED**.

The application will be forwarded to the examiner for action on the merits commensurate with this decision.

Should there be any questions with regard to this letter please contact John Kittle by letter addressed to the Director, Technology Center 3700/2900, P.O. Box 1450 Alexandria, VA 22313-1450, or by telephone at (703) 308-0873 or by facsimile transmission at (703) 308-3139.

John E. Kittle

John E. Kittle
Director
Technology Center 3700/2900

UNITED STATES PATENT AND TRADEMARK OFFICE

Commissioner for Patents
United States Patent and Trademark Office
P.O. Box 1450
Alexandria, VA 22313-1450
www.uspto.gov

SEP 17 2005

TRASK BRITT
P.O. BOX 2550
SALT LAKE CITY UT 84110

In re Application of	:	
Kenneth Link	:	
Serial No.: 29/201,312	:	DECISION ON PETITION
Filed: March 12, 2004	:	
For: Side Element of a Shoe Upper	:	

This is in response to the petition applicant filed on March 12, 2004 to make the above-identified application special under the provisions of 37 CFR 1.102(d).

Applicant has satisfied the provisions set forth in M.P.E.P. 708.02, VIII, thus the petition is **GRANTED**.

The application will be forwarded to the examiner for action on the merits commensurate with this decision.

Should there be any questions with regard to this letter please contact John Kittle by letter addressed to the Director, Technology Center 3700/2900, P.O. Box 1450 Alexandria, VA 22313-1450, or by telephone at (703) 308-0873 or by facsimile transmission at (703) 308-3139.

John E. Kittle

John E. Kittle
Director
Technology Center 3700/2900

UNITED STATES PATENT AND TRADEMARK OFFICE

Commissioner for Patents
United States Patent and Trademark Office
P.O. Box 1450
Alexandria, VA 22313-1450
www.uspto.gov

JUL 14 2004

BANNER & WITCOFF
1001 G STREET N W
SUITE 1100
WASHINGTON DC 20001

In re Application of	:	
Brad Wahoske	:	
Serial No.: 29/201,317	:	DECISION ON PETITION
Filed: March 15, 2004	:	
For: Portion Of A Shoe Upper	:	

This is in response to the petition applicant filed on April 9, 2004 to make the above-identified application special under the provisions of 37 CFR 1.102(d).

Applicant has satisfied the provisions set forth in M.P.E.P. 708.02, VIII, thus the petition is **GRANTED**.

The application will be forwarded to the examiner for action on the merits commensurate with this decision.

Should there be any questions with regard to this letter please contact John Kittle by letter addressed to the Director, Technology Center 3700/2900, P.O. Box 1450 Alexandria, VA 22313-1450, or by telephone at (703) 308-0873 or by facsimile transmission at (703) 308-3139.

John E. Kittle
Director
Technology Center 3700/2900

UNITED STATES PATENT AND TRADEMARK OFFICE

Commissioner for Patents
United States Patent and Trademark Office
P.O. Box 1450
Alexandria, VA 22313-1450
www.uspto.gov

BAKER & BOTTS
30 ROCKEFELLER PLAZA
NEW YORK, NY 10112

COPY MAILED

MAR 27 2006

OFFICE OF PETITIONS

In re Application of

Yu, et al.

Application No. 29/201,325

Filed: March 12, 2004

Attorney Docket No. A36186-068275.0104

DECISION ON PETITION

This is a decision on the petition under 37 CFR 1.137(b), filed November 10, 2005, to revive the above-identified application.

The petition is **GRANTED**.

The above-cited application became abandoned for failure to reply in a timely manner to the Notice of Allowability mailed February 10, 2005, which set a statutory period for reply of three (3) months from its mailing date. The Notice of Allowability required corrected drawings to be filed. Accordingly, the application became abandoned on May 11, 2005. A Notice of Abandonment was mailed on August 4, 2005.

The response to the Notice of Allowability, filed November 10, 2005, is noted.

The terminal disclaimer filed November 10, 2005, is also noted.

The application is being forwarded to the Office of Patent Publications for further processing.

Telephone inquiries concerning this decision should be directed to the undersigned at (571) 272-3222.

Kenya A. McLaughlin
Petitions Attorney
Office of Petitions

UNITED STATES PATENT AND TRADEMARK OFFICE

Commissioner for Patents
United States Patent and Trademark Office
P.O. Box 1450
Alexandria, VA 22313-1450
www.uspto.gov

BAKER & BOTTS
30 ROCKEFELLER PLAZA
NEW YORK, NY 10112

COPY MAILED

MAR 27 2006

OFFICE OF PETITIONS

In re Application of

Yu, et al.

Application No. 29/201,326

Filed: March 12, 2004

Attorney Docket No. A36187-068275.0105

DECISION ON PETITION

This is a decision on the petition under 37 CFR 1.137(b), filed November 10, 2005, to revive the above-identified application.

The petition is **GRANTED**.

The above-cited application became abandoned for failure to reply in a timely manner to the Notice of Allowability mailed February 10, 2005, which set a statutory period for reply of three (3) months from its mailing date. The Notice of Allowability required corrected drawings to be filed. Accordingly, the application became abandoned on May 11, 2005. A Notice of Abandonment was mailed on August 3, 2005.

The response to the Notice of Allowability, filed November 10, 2005, is noted.

The terminal disclaimer filed November 10, 2005, is also noted.

The application is being forwarded to the Office of Patent Publications for further processing.

Telephone inquiries concerning this decision should be directed to the undersigned at (571) 272-3222.

Kenya A. McLaughlin
Petitions Attorney
Office of Petitions

UNITED STATES PATENT AND TRADEMARK OFFICE

Commissioner for Patents
United States Patent and Trademark Office
P.O. Box 1450
Alexandria, VA 22313-1450
www.uspto.gov

MAY 20 2004

BANNER & WITCOFF
ELEVENTH FLOOR
1001 G STREET N W
WASHINGTON DC 20001

In re Application of	:	
William Young	:	
Serial No.: 29/201,332	:	DECISION ON PETITION
Filed: March 15, 2004	:	
For: Portion Of A Shoe Upper	:	

This is in response to the petition applicant filed on April 9, 2004 to make the above-identified application special under the provisions of 37 CFR 1.102(d).

Applicant has satisfied the provisions set forth in M.P.E.P. 708.02, VIII, thus the petition is **GRANTED**.

The application will be forwarded to the examiner for action on the merits commensurate with this decision.

Should there be any questions with regard to this letter please contact John Kittle by letter addressed to the Director, Technology Center 3700/2900, P.O. Box 1450 Alexandria, VA 22313-1450, or by telephone at (703) 308-0873 or by facsimile transmission at (703) 308-3139.

John E. Kittle

John E. Kittle
Director
Technology Center 3700/2900

UNITED STATES PATENT AND TRADEMARK OFFICE

Commissioner for Patents
United States Patent and Trademark Office
P.O. Box 1450
Alexandria, VA 22313-1450
www.uspto.gov

MAY 20 2004

Stephen R. Greiner, Esquire
GREINER LAW OFFICES, P.C.
Suite 110
6701 Democracy Blvd.
Bethesda MD 20817

In re Application of	:	
Arnold H. Maarberg	:	DECISION ON PETITION
Serial No.: 29/201,383	:	
Filed: March 16, 2004	:	
For: Spaghetti Measurer	:	

This is in response to applicants' petition filed March 16, 2004, to make the above-identified application special under the provisions of 37 CFR 1.102(c), based on the age of the applicant.

Applicant has satisfied the provisions set forth in M.P.E.P. 708.02, IV. Therefore the petition is **GRANTED**.

The application will be forwarded to the examiner for action on the merits commensurate with this decision.

Should there be any questions with regard to this letter please contact John Kittle by letter addressed to the Director, Technology Center 3700/2900, P.O. Box 1450 Alexandria, VA 22313-1450 or by telephone at (703) 308-0873 or by facsimile transmission at (703) 308-3139.

John E. Kittle

John E. Kittle
Director,
Technology Center 3700/2900

UNITED STATES PATENT AND TRADEMARK OFFICE

Commissioner for Patents
United States Patent and Trademark Office
P.O. Box 1450
Alexandria, VA 22313-1450
www.uspto.gov

JUN 28 2004

BANNER & WITCOFF
ELEVENTH FLOOR
1001 G STREET N W
WASHINGTON DC 20001

In re Application of	:	
E. Scott Morris	:	
Serial No.: 29/201,388	:	DECISION ON PETITION
Filed: March 16, 2004	:	
For: Portion Of A Shoe Upper	:	

This is in response to the petition applicant filed on March 16, 2004 to make the above-identified application special under the provisions of 37 CFR 1.102(d).

Applicant has satisfied the provisions set forth in M.P.E.P. 708.02, VIII, thus the petition is **GRANTED**.

The application will be forwarded to the examiner for action on the merits commensurate with this decision.

Should there be any questions with regard to this letter please contact John Kittle by letter addressed to the Director, Technology Center 3700/2900, P.O. Box 1450 Alexandria, VA 22313-1450, or by telephone at (703) 308-0873 or by facsimile transmission at (703) 308-3139.

John E. Kittle

John E. Kittle
Director
Technology Center 3700/2900

UNITED STATES PATENT AND TRADEMARK OFFICE

Commissioner for Patents
United States Patent and Trademark Office
P.O. Box 1450
Alexandria, VA 22313-1450
www.uspto.gov

MAY 20 2004

BANNER & WITCOFF
ELEVENTH FLOOR
1001 G STREET N W
WASHINGTON DC 20001

In re Application of	:	
Tate E. Kuerbis	:	
Serial No.: 29/201,394	:	DECISION ON PETITION
Filed: March 16, 2004	:	
For: Portion Of A Shoe Upper	:	

This is in response to the petition applicant filed on March 16, 2004 to make the above-identified application special under the provisions of 37 CFR 1.102(d).

Applicant has satisfied the provisions set forth in M.P.E.P. 708.02, VIII, thus the petition is **GRANTED**.

The application will be forwarded to the examiner for action on the merits commensurate with this decision.

Should there be any questions with regard to this letter please contact John Kittle by letter addressed to the Director, Technology Center 3700/2900, P.O. Box 1450 Alexandria, VA 22313-1450, or by telephone at (703) 308-0873 or by facsimile transmission at (703) 308-3139.

John E. Kittle
Director
Technology Center 3700/2900

UNITED STATES PATENT AND TRADEMARK OFFICE

Commissioner for Patents
United States Patent and Trademark Office
P.O. Box 1450
Alexandria, VA 22313-1450
www.uspto.gov

MAY 20 2004

Edward R. Hardina
1138 Maravista Dr
Trinity FL 34655

In re Application of	:	
Edward Robert Hardina Jr.	:	
Serial No.: 29/201,398	:	DECISION ON PETITION
Filed: March 15, 2004	:	
For: Picture Hangar	:	
	:	

This is in response to applicants' petition filed March 15, 2004 to make the above-identified application special under the provisions of 37 CFR 1.102(c), based on the age of the applicant.

Applicant has satisfied the provisions set forth in M.P.E.P. 708.02, IV. Therefore the petition is **GRANTED**.

The application will be forwarded to the examiner for action on the merits commensurate with this decision.

Should there be any questions with regard to this letter please contact John Kittle by letter addressed to the Director, Technology Center 3700/2900, P.O. Box 1450 Alexandria, VA 22313-1450, or by telephone at (703) 308-0873 or by facsimile transmission at (703) 308-3139.

John E. Kittle

John E. Kittle
Director,
Technology Center 3700/2900

UNITED STATES PATENT AND TRADEMARK OFFICE

Commissioner for Patents
United States Patent and Trademark Office
P.O. Box 1450
Alexandria, VA 22313-1450
www.uspto.gov

EDWARD R. HARDINA
1138 MARAVISTA DRIVE
TRINITY, FL 34655

COPY MAILED

SEP 16 2005

OFFICE OF PETITIONS

In re Application of	:	
Edward Robert Hardina, Jr.	:	
Application No. 29/201,398	:	ON PETITION
Filed: May 19, 2003	:	
Attorney Docket No. N/A	:	

This is a decision on the papers styled, "Petition Under 37 CFR 1.181 To Change Filing Date," filed May 25, 2005, which has been treated as a petition under 37 CFR 1.10(e), requesting that the above-identified application be accorded a filing date of May 19, 2003, instead of the presently accorded filing date of March 15, 2004.

Petitioner alleges that the application was deposited in "Express Mail" service with the U.S. Postal Service on May 19, 2003. In support, petitioner has provided a copy of the Express Mail label, receipt no. ER128213365, showing a "Date-In" of May 19, 2003. The same Express Mail receipt number was referred to in the copy of the original Application Transmittal Letter submitted with the instant petition. Petitioner requests that the application be accorded a filing date of May 19, 2003.

The Office considers the date the paper or fee is shown to have been deposited as "Express Mail" to be the "Date-In" on the Express Mail label (MPEP 513). That is the date that verifies that the package was actually mailed. In view of the above, the evidence is convincing that the application was deposited as "Express Mail" with the U.S. Postal Service on May 19, 2003.

In view of the above, the petition is granted.

Accordingly, the above-identified application papers are entitled to a filing date of May 19, 2003.

Please note, the application file does not indicate a change of address has been filed in this case, although the address given on the petition differs from the address of record. A change of address should be filed in this case in accordance with MPEP 601.03.

Furthermore, there is no indication that petitioner herein was ever empowered to prosecute the instant application. If petitioner desires to receive future correspondence regarding this application, the appropriate power of attorney documentation must be submitted.

A courtesy copy of this decision will be mailed to petitioner. However, all future correspondence will be directed to the address of record until such time as appropriate instructions are received to the contrary.

The application is being forwarded to the Office of Initial Patent Examination for processing with a filing date of May 19, 2003 and the mailing of a corrected filing receipt.

Telephone inquiries concerning this matter may be directed to the undersigned at (571) 272-3228.

Edward J. Tannouse
Petitions Attorney
Office of Petitions
Office of the Deputy Commissioner
for Patent Examination Policy

cc.
RICHARD S. ELIAS
239 ALPINE DRIVE
LEESBURG, VA 20175

UNITED STATES
PATENT AND
TRADEMARK OFFICE

UNDER SECRETARY OF COMMERCE FOR INTELLECTUAL PROPERTY AND
DIRECTOR OF THE UNITED STATES PATENT AND TRADEMARK OFFICE
WASHINGTON, D.C. 20231
WWW.USPTO.GOV

MAR 19 2004

Glenn K. Robbins II
2000 Equitable Building
10 S. Broadway
St. Louis MO 63102

In re Application of	:	
Simon Nan	:	DECISION ON : REQUEST FOR
Serial No.: 29/201,430	:	EXPEDITED EXAMINATION
Filed: March 16, 2004	:	
For: Battery Control Box for Vibrator	:	

This is in response to the Request for expedited examination applicant filed on March 16, 2004 to expedite the above-identified application under the provisions of 37 CFR 1.155 .

Applicant has satisfied the provisions set forth in 37 CFR 1.155, thus the petition is **GRANTED**.

The application will be forwarded to the examiner for action on the merits commensurate with this decision.

Should there be any questions with regard to this letter please contact John Kittle by letter addressed to the Director, Technology Center 3700/2900, P.O. Box 1450 Alexandria, VA 22313-1450, or by telephone at (703)308-0873 or by facsimile transmission at (703)308-3139.

John E. Kittle

John E. Kittle
Director
Technology Center 3700/2900

UNITED STATES PATENT AND TRADEMARK OFFICE

Commissioner for Patents
United States Patent and Trademark Office
P.O. Box 1450
Alexandria, VA 22313-1450
www.uspto.gov

MAY 20 2004

TRASKBRITT
P.O. BOX 2550
SALT LAKE CITY, UT 84110-2550

In re Application of	:	
E. Scott Morris	:	
Serial No.: 29/201,433	:	DECISION ON PETITION
Filed: March 15, 2004	:	
For: Side Element Of A Shoe Upper	:	

This is in response to the petition applicant filed on March 15, 2004 to make the above-identified application special under the provisions of 37 CFR 1.102(d).

Applicant has satisfied the provisions set forth in M.P.E.P. 708.02, VIII, thus the petition is **GRANTED**.

The application will be forwarded to the examiner for action on the merits commensurate with this decision.

Should there be any questions with regard to this letter please contact John Kittle by letter addressed to the Director, Technology Center 3700/2900, P.O. Box 1450 Alexandria, VA 22313-1450, or by telephone at (703) 308-0873 or by facsimile transmission at (703) 308-3139.

John E. Kittle

John E. Kittle
Director
Technology Center 3700/2900

UNITED STATES PATENT AND TRADEMARK OFFICE

Commissioner for Patents
United States Patent and Trademark Office
P.O. Box 1450
Alexandria, VA 22313-1450
www.uspto.gov

MAY 20 2004

TRASKBRITT
P.O. BOX 2550
SALT LAKE CITY, UT 84110-2550

In re Application of	:	
E. Scott Morris	:	
Serial No.: 29/201,434	:	DECISION ON PETITION
Filed: March 15, 2004	:	
For: Side Element Of A Shoe Upper	:	

This is in response to the petition applicant filed on March 15, 2004 to make the above-identified application special under the provisions of 37 CFR 1.102(d).

Applicant has satisfied the provisions set forth in M.P.E.P. 708.02, VIII, thus the petition is **GRANTED**.

The application will be forwarded to the examiner for action on the merits commensurate with this decision.

Should there be any questions with regard to this letter please contact John Kittle by letter addressed to the Director, Technology Center 3700/2900, P.O. Box 1450 Alexandria, VA 22313-1450, or by telephone at (703) 308-0873 or by facsimile transmission at (703) 308-3139.

John E. Kittle
Director
Technology Center 3700/2900

UNITED STATES PATENT AND TRADEMARK OFFICE

Commissioner for Patents
United States Patent and Trademark Office
P.O. Box 1450
Alexandria, VA 22313-1450
www.uspto.gov

WORKMAN NYDEGGER
(F/K/A WORKMAN NYDEGGER & SEELEY)
60 EAST SOUTH TEMPLE
1000 EAGLE GATE TOWER
SALT LAKE CITY, UT 84111

COPY MAILED
OCT 18 2005
OFFICE OF PETITIONS

In re Application of	:
Bryan K. Hicks et al	: DECISION GRANTING PETITION
Application No. 29/201,442	: UNDER 37 CFR 1.313(c)(3)
Filed: March 16, 2004	:
Atty Docket No. 14591.2.1.1.1.1.1	:

This is a decision on the petition under 37 CFR 1.313(c)(3), filed October 17, 2005 to withdraw the above-identified application from issue after payment of the issue fee. This is also a decision on the concurrently filed petition under 37 CFR 1.182 for expedited handling of the petition under 37 CFR 1.313(c)(3).

The petition under 37 CFR 1.313(c)(3) is **GRANTED**.

The petition under 37 CFR 1.182 is **DISMISSED** as unnecessary since petitions to withdraw from issue are already handled on an expedited basis.

The above-identified application is hereby withdrawn from issue in favor of a continued prosecution application (CPA) under 37 CFR 1.53(d).

Petitioner is advised that the issue fee paid on June 14, 2005 in the parent application is not refundable nor can it be applied towards any new Notice of Allowance which may issue on the CPA filed October 17, 2005.

Telephone inquiries should be directed to the undersigned at (571) 272-3218.

This matter is being referred to Technology Center AU 2914 for processing of the CPA and consideration of the IDS.

Frances Hicks
Frances Hicks
Petitions Examiner
Office of Petitions

UNITED STATES PATENT AND TRADEMARK OFFICE

Commissioner for Patents
United States Patent and Trademark Office
P.O. Box 1450
Alexandria, VA 22313-1450
www.uspto.gov

THOMPSON E. FEHR
GOLDENWEST CORPORATE CENTER, SUITE 300
5025 ADAMS AVENUE
OGDEN UT 84403

COPY MAILED

APR 30 2008

OFFICE OF PETITIONS

In re Application of	:	
Ralph S. NORMAN	:	
Application No. 29/201,458	:	DECISION ON PETITION
Filed: March 15, 2004	:	
Attorney Docket No. **PNORMD**	:	

This is a decision on the petition under 37 CFR 1.137(b), filed February 19, 2008, to revive the above-identified design application.

The petition is **GRANTED**.

The application became abandoned for failure to timely pay the issue fee and submit corrected drawings on or before November 21, 2007, as required by the Notice of Allowance and Fee(s) Due, mailed August 21, 2007, which set a statutory period for reply of three (3) months. Accordingly, the application became abandoned on November 22, 2007. A Notice of Abandonment was mailed on December 18, 2007.

The petition satisfies the requirements of 37 CFR 1.137(b) in that petitioner has supplied (1) the reply in the form of the $400 issue fee and corrected drawings, (2) the petition fee of $770, (3) a proper statement of unintentional delay, and (4) a terminal disclaimer and fee as required by 37 CFR 1.137(d). Accordingly, the failure to timely pay the issue fee and submit corrected drawings as required by the Notice of Allowance and Issue Fees is accepted as being unintentionally delayed.

The terminal disclaimer is accepted and has been made of record. Any continuing application filed from this application must contain a copy of the terminal disclaimer. The copy of the terminal disclaimer must be filed with a cover letter requesting the terminal disclaimer be recorded on the continuing application. A copy of this decision should be attached to the cover letter.

This application is being referred to Publishing Division for further processing in accordance with this decision on petition.

David Bucci
Petitions Examiner
Office of Petitions

UNITED STATES PATENT AND TRADEMARK OFFICE

Commissioner for Patents
United States Patent and Trademark Office
P.O. Box 1450
Alexandria, VA 22313-1450
www.uspto.gov

JUN 2 1 2004

TRASK BRITT
P.O. BOX 2550
SALT LAKE CITY UT 84110

In re Application of	:	
John Hlavacs	:	
Serial No.: 29/201,459	:	DECISION ON PETITION
Filed: March 15, 2004	:	
For: Side Element Of A Shoe Upper	:	

This is in response to the petition applicant filed on March 15, 2004 to make the above-identified application special under the provisions of 37 CFR 1.102(d).

Applicant has satisfied the provisions set forth in M.P.E.P. 708.02, VIII, thus the petition is **GRANTED**.

The application will be forwarded to the examiner for action on the merits commensurate with this decision.

Should there be any questions with regard to this letter please contact John Kittle by letter addressed to the Director, Technology Center 3700/2900, P.O. Box 1450 Alexandria, VA 22313-1450, or by telephone at (703) 308-0873 or by facsimile transmission at (703) 308-3139.

John E. Kittle

John E. Kittle
Director
Technology Center 3700/2900

UNITED STATES PATENT AND TRADEMARK OFFICE

Commissioner for Patents
United States Patent and Trademark Office
P.O. Box 1450
Alexandria, VA 22313-1450
www.uspto.gov

JUN 2 1 2004

TRASK BRITT
P.O. BOX 2550
SALT LAKE CITY UT 84110

In re Application of	:	
Leonard Wozniak	:	
Serial No.: 29/201,460	:	DECISION ON PETITION
Filed: March 15, 2004	:	
For: Side Element Of A Shoe Upper	:	

This is in response to the petition applicant filed on March 15, 2004 to make the above-identified application special under the provisions of 37 CFR 1.102(d).

Applicant has satisfied the provisions set forth in M.P.E.P. 708.02, VIII, thus the petition is **GRANTED**.

The application will be forwarded to the examiner for action on the merits commensurate with this decision.

Should there be any questions with regard to this letter please contact John Kittle by letter addressed to the Director, Technology Center 3700/2900, P.O. Box 1450 Alexandria, VA 22313-1450, or by telephone at (703) 308-0873 or by facsimile transmission at (703) 308-3139.

John E. Kittle
Director
Technology Center 3700/2900

UNITED STATES PATENT AND TRADEMARK OFFICE

Commissioner for Patents
United States Patent and Trademark Office
P.O. Box 1450
Alexandria, VA 22313-1450
www.uspto.gov

JUN 28 2004

TRASK BRITT
P.O. BOX 2550
SALT LAKE CITY UT 84110

In re Application of	:	
William J. Cass	:	
Serial No.: 29/201,461	:	DECISION ON PETITION
Filed: March 15, 2004	:	
For: Side Element of a Shoe Upper	:	

This is in response to the petition applicant filed on March 15, 2004 to make the above-identified application special under the provisions of 37 CFR 1.102(d).

Applicant has satisfied the provisions set forth in M.P.E.P. 708.02, VIII, thus the petition is **GRANTED**.

The application will be forwarded to the examiner for action on the merits commensurate with this decision.

Should there be any questions with regard to this letter please contact John Kittle by letter addressed to the Director, Technology Center 3700/2900, P.O. Box 1450 Alexandria, VA 22313-1450, or by telephone at (703) 308-0873 or by facsimile transmission at (703) 308-3139.

John E. Kittle

John E. Kittle
Director
Technology Center 3700/2900

UNITED STATES PATENT AND TRADEMARK OFFICE

Commissioner for Patents
United States Patent and Trademark Office
P.O. Box 1450
Alexandria, VA 22313-1450
www.uspto.gov

WORKMAN NYDEGGER (F/K/A WORKMAN
NYDEGGER & SEELEY)
60 EAST SOUTH TEMPLE
1000 EAGLE GATE TOWER
SALT LAKE CITY UT 84111

COPY MAILED

SEP 27 2004

OFFICE OF PETITIONS

In re Application of :
Bryan K. Hicks et al :
Application No. 29/201,485 : ON PETITION
Filed: March 16, 2004 :
Attorney Docket No. 14591.2.1.1.1.1 :

This is a decision on the petition, filed September 24, 2004, under 37 CFR 1.313(c)(3) to withdraw the above-identified application from issue after payment of the issue fee.

The petition is **GRANTED**.

The above-identified application is withdrawn from issue in favor of a continued prosecution application (CPA) under 37 CFR 1.53(d).

Petitioner is advised that the issue fee paid on September 8, 2004 in the parent application is not refundable nor can it be applied towards any new Notice of Allowance which may issue on the CPA filed September 8, 2004.

Telephone inquiries should be directed to the undersigned at (703) 305-8859.

After receipt of the file in the Office of Petitions, the application will be forwarded to Technology Center Art Unit 2914 for processing of the CPA.

Karen Creasy

Karen Creasy
Petitions Examiner
Office of Petitions
Office of the Deputy Commissioner
for Patent Examination Policy

UNITED STATES PATENT AND TRADEMARK OFFICE

Commissioner for Patents
United States Patent and Trademark Office
P.O. Box 1450
Alexandria, VA 22313-1450
www.uspto.gov
DIW Mar-07

BANNER & WITCOFF, LTD.
1100 13th STREET, N.W.
SUITE 1200
WASHINGTON DC 20005-4051

COPY MAILED

MAR 2 6 2007

OFFICE OF PETITIONS

In re Patent No. D518,928	:	
Issued: 11 April, 2006	:	
Application No. 29/201,495	:	ON PETITION
Filed: 17 March, 2004	:	
Atty Docket No. 001582.00217	:	

This is a decision in reference to the "PETITION UNDER 37 CFR 1.183 FOR CERTIFICATE OF CORRECTION," filed on 22 May, 2006, which is being treated as a request under 37 CFR 3.81(b)[1] to add an assignee on the front page of the above-identified patent by way of a Certificate of Correction.

The petition is **granted**.

Petitioners should note that there is a fee of $100.00 for issuance of a certificate of correction fee is $100.00. The fee will be charged to counsel's deposit account.

Telephone inquires concerning this matter may be directed to the undersigned at 571.272.3231. Any questions concerning the issuance of the Certificate of Correction should be directed to the Certificates of Correction Branch at 703.305.8309.

The file is being forwarded to the Certificates of Correction Branch for issuance of the requested Certificate of Correction.

D Wood

Douglas I. Wood
Senior Petitions Attorney
Office of Petitions

---

[1] See Official Gazette of 22 June, 2004.

UNITED STATES PATENT AND TRADEMARK OFFICE

Commissioner for Patents
United States Patent and Trademark Office
P.O. Box 1450
Alexandria, VA 22313-1450
www.uspto.gov

MAY 20 2004

BANNER & WITCOFF
ELEVENTH FLOOR
1001 G STREET N W
WASHINGTON DC 20001

In re Application of	:	
E. Scott Morris	:	
Serial No.: 29/201,496	:	DECISION ON PETITION
Filed: March 17, 2004	:	
For: Portion Of A Shoe Upper	:	

This is in response to the petition applicant filed on March 17, 2004 to make the above-identified application special under the provisions of 37 CFR 1.102(d).

Applicant has satisfied the provisions set forth in M.P.E.P. 708.02, VIII, thus the petition is **GRANTED**.

The application will be forwarded to the examiner for action on the merits commensurate with this decision.

Should there be any questions with regard to this letter please contact John Kittle by letter addressed to the Director, Technology Center 3700/2900, P.O. Box 1450 Alexandria, VA 22313-1450, or by telephone at (703) 308-0873 or by facsimile transmission at (703) 308-3139.

John E. Kittle

John E. Kittle
Director
Technology Center 3700/2900

UNITED STATES PATENT AND TRADEMARK OFFICE

Commissioner for Patents
United States Patent and Trademark Office
P.O. Box 1450
Alexandria, VA 22313-1450
www.uspto.gov

MAY 20 2004

BANNER & WITCOFF
ELEVENTH FLOOR
1001 G STREET N W
WASHINGTON DC 20001

In re Application of	:	
Tate E. Kuerbis	:	
Serial No.: 29/201,497	:	DECISION ON PETITION
Filed: March 17, 2004	:	
For: Portion Of A Shoe Upper	:	

This is in response to the petition applicant filed on March 17, 2004 to make the above-identified application special under the provisions of 37 CFR 1.102(d).

Applicant has satisfied the provisions set forth in M.P.E.P. 708.02, VIII, thus the petition is **GRANTED**.

The application will be forwarded to the examiner for action on the merits commensurate with this decision.

Should there be any questions with regard to this letter please contact John Kittle by letter addressed to the Director, Technology Center 3700/2900, P.O. Box 1450 Alexandria, VA 22313-1450, or by telephone at (703) 308-0873 or by facsimile transmission at (703) 308-3139.

John E. Kittle
Director
Technology Center 3700/2900

UNITED STATES PATENT AND TRADEMARK OFFICE

Commissioner for Patents
United States Patent and Trademark Office
P.O. Box 1450
Alexandria, VA 22313-1450
www.uspto.gov

ROYLANCE, ABRAMS, BERDO & GOODMAN, L.L.P.
1300 19TH STREET, N.W.
SUITE 600
WASHINGTON, DC 20036

COPY MAILED

JAN 0 4 2005

OFFICE OF PETITIONS

In re Application of
Schaub, et al.
Application No.: 29/201,516
Filed: March 17, 2004
Attorney Docket No.: 46812 (P-6281/2)
For: SAMPLE TUBE TRAY

DECISION REFUSING STATUS
UNDER 37 CFR 1.47(a)

This is a decision on the petition under 37 CFR 1.47(a), filed November 17, 2004.

The petition is **DISMISSED**.

Any request for reconsideration of this decision must be submitted within TWO (2) MONTHS from the mail date of this decision. Extensions of time under 37 CFR 1.136(a) are permitted. Any response should be entitled "Request for Reconsideration of Petition Under 37 CFR 1.47(a)" and may include an oath or declaration executed by the inventor. **Failure to respond will result in abandonment of the application.**

The above-identified application was filed on March 17, 2004 without an executed oath or declaration. Accordingly, on May 17, 2004, a "Notice to File Missing Parts of Nonprovisional Application" was mailed, requiring an executed oath or declaration, filing fees, and a surcharge for their late filing.

In response, on November 17, 2004, a declaration executed by 8 of 9 joint inventors, the surcharge, application filing fees, the petition fee, and the instant petition were filed. A declaration of Attorney Martin Miller accompanies the petition. Mr. Miller shows that non-signing inventor Martin Lightner received a copy of the application, a declaration, and an assignment for the above-identified application, but did not respond to the request that he sign the declaration for the patent application.

A grantable petition under 37 CFR 1.47(a) requires

(1) a petition including proof of the pertinent facts establishing that the joint inventor(s) refuses to join, or cannot be found or reached after diligent effort,
(2) a proper oath or Declaration executed by the available joint inventor(s),
(3) the fee of $130 as specified in 37 CFR § 1.17(h), and
(4) the last known address of the omitted inventor(s).

This petition lacks item (2) above.

As to item (2), an oath or declaration for the patent application in compliance with 37 CFR 1.63 and 1.64 still has not been presented.

The declaration contains noninitialed, nondated alteration to Andrew Ervin's information. He appears to have altered his address by hand. 37 CFR 1.52(c) states that "[a]ny interlineation, erasure, cancellation or other alteration of the application papers filed should be made on or before the signing of the accompanying oath or declaration pursuant to 1.63...." This includes the oath or declaration. The Office will not consider whether noninitialed and or nondated alterations were made before or after signing of the oath or declaration but will require a new oath or declaration. See MPEP 605.04(a).

In addition, there are **two** listed 7th inventors. Kion Ervins and Andrew Ervins are both listed as the 7th inventor on the declaration.

An oath or declaration in compliance with 37 CFR 1.63 and 1.64 signed by the Rule 1.47 applicants on behalf of Mr. Lightner is REQUIRED. See MPEP 409.03(a).

Fortunately, the deficiencies or inaccuracies relate to a signing inventor. Thus, pursuant to 37 CFR 1.67(a)(2), Andrew Ervins can correct his address and list himself as the 9th inventor on a supplemental declaration identifying the entire inventive entity but signed only by him.

Further correspondence with respect to this matter should be addressed as follows:

By mail: Mail Stop PETITION
Commissioner for Patents
Post Office Box 1450
Alexandria, VA 22313-1450

By hand: U.S. Patent and Trademark Office
220 20th Street S.
Customer Window, Mail Stop Petition
Crystal Plaza 2, Lobby, Room 1B03
Arlington, VA 22202

By FAX: (703) 872-9306 – ATTN: Office of Petitions

Telephone inquiries should be directed to the undersigned at (571) 272-3230.

E. Shirene Willis

E. Shirene Willis
Senior Petitions Attorney
Office of Petitions

UNITED STATES PATENT AND TRADEMARK OFFICE

Commissioner for Patents
United States Patent and Trademark Office
P.O. Box 1450
Alexandria, VA 22313-1450
www.uspto.gov

ROYLANCE, ABRAMS, BERDO & GOODMAN, L.L.P.
1300 19TH STREET, N.W.
SUITE 600
WASHINGTON, DC 20036

COPY MAILED

MAR 07 2005

OFFICE OF PETITIONS

In re Application of
Schaub, et al.
Application No.: 29/201,516
Filed: March 17, 2004
Attorney Docket No.: 46812 (P-6281/2)
For: SAMPLE TUBE TRAY

DECISION ACCORDING STATUS
UNDER 37 CFR 1.47(a)

This is a decision on the reconsideration petition under 37 CFR 1.47(a), filed January 28, 2005.

The petition is **GRANTED**.

Petitioners have shown that the non-signing inventor, Martin Lightner, has constructively refused to join in the filing of the above-identified application after having been presented with the application papers. Specifically, the declaration/statement of facts of Attorney Martin Miller establishes that the inventor received a copy of the application papers, including the specification, claims and drawings, but the inventor failed to respond to the request that he sign the declaration for patent application. Petitioners have submitted a declaration in compliance with 37 CFR 1.63 and 1.64.

This application and papers have been reviewed and found in compliance with 37 CFR 1.47(a). This application is hereby accorded Rule 1.47(a) status.

As provided in Rule 1.47(c), this Office will forward notice of this application's filing to the non-signing inventor at the address given in the petition. Notice of the filing of this application will also be published in the Official Gazette.

After this decision is mailed, the above-identified application will be forwarded to the Office of Initial Patent Examination for further processing.

Telephone inquiries should be directed to the undersigned at (571) 272-3230.

E. Shirene Willis
Senior Petitions Attorney
Office of Petitions

UNITED STATES PATENT AND TRADEMARK OFFICE

Commissioner for Patents
United States Patent and Trademark Office
P.O. Box 1450
Alexandria, VA 22313-1450
www.uspto.gov

MARTIN LIGHTNER
536 COUNTRY RIDGE CIRCLE
BEL AIR, MD 21015

COPY MAILED

MAR 07 2005

OFFICE OF PETITIONS

In re Application of
Schaub, et al.
Application No.: 29/201,516
Filed: March 17, 2004
Attorney Docket No.: 46812 (P-6281/2)
For: SAMPLE TUBE TRAY

LETTER

Dear Mr. Lightner:

You are named as a joint inventor in the above identified United States patent application, filed under the provisions of 35 U.S.C. 116 (United States Code), and 37 CFR 1.47(a), Rules of Practice in Patent Cases. Should a patent be granted on the application you will be designated therein as a joint inventor.

As a named inventor you are entitled to inspect any paper in the file wrapper of the application, order copies of all or any part thereof (at a prepaid cost per 37 CFR 1.19) or make your position of record in the application. Alternatively, you may arrange to do any of the preceding through a registered patent attorney or agent presenting written authorization from you. If you care to join the application, counsel of record (see below) would presumably assist you. Joining in the application would entail the filing of an appropriate oath or declaration by you pursuant to 37 CFR 1.63.

Requests for information regarding your application should be directed to the File Information Unit at (703)308-2733. Information regarding how to pay for and order a copy of the application, or a specific paper in the application, should be directed to Certification Division at (703)308-9726 or 1(800)972-6382 (outside the Washington D.C. area).

Telephone inquiries regarding this communication should be directed to the undersigned at (571) 272-3230.

E. Shirene Willis

E. Shirene Willis
Senior Petitions Attorney
Office of Petitions

ATTORNEY OF RECORD: ROYLANCE, ABRAMS, BERDO & GOODMAN, L.L.P.
1300 19TH STREET, N.W.
SUITE 600
WASHINGTON, DC 20036

UNITED STATES PATENT AND TRADEMARK OFFICE

Commissioner for Patents
United States Patent and Trademark Office
P.O. Box 1450
Alexandria, VA 22313-1450
www.uspto.gov

BRADLEY F. RADEMAKER, ESQ.
WALLENSTEIN, WAGNER & ROCKEY, LTD.
53RD FLOOR
311 SOUTH WACKER DRIVE
CHICAGO IL 60606-6630

COPY MAILED

SEP 2 0 2005

OFFICE OF PETITIONS

In re Application of :
Erich J. SCHLOSSER et al. :
Application No. 29/201,518 :
Filed: March 16, 2004 :
Attorney Docket No. 217 D 963 :

ON PETITION

This is a decision on the petition under 37 CFR 1.137(b), filed August 4, 2005, to revive the above-identified application.

The petition is **GRANTED**.

The above-identified application became abandoned for failure to submit the issue fee in a timely manner in reply to the Notice of Allowance mailed November 18, 2004, which set a statutory period for reply of three (3) months. Accordingly, by operation of law, the above-identified application became abandoned on February 19, 2005.

The petition satisfies the conditions for revival pursuant to the provisions of 37 CFR 1.137(b) in that (1) the reply in the form of payment of the Issue Fee; (2) the petition fee of $1500; (3) the required statement of unintentional delay; and (4) any terminal disclaimer (and fee set forth in 37 CFR 1.20(d)) required pursuant to 37 CFR 1.137(c) have been received. Accordingly, the Issue Fee payment is accepted as having been unintentionally delayed.

The terminal disclaimer filed August 4, 2005 has been accepted.

Telephone inquiries concerning this decision should be directed to David A. Bucci at (571) 272-7099 or in his absence, the undersigned at (571) 272-3217.

The application file is being referred to the Office of Patent Publication.

Frances Hicks for
Brian Hearn
Petitions Examiner

UNITED STATES PATENT AND TRADEMARK OFFICE

Commissioner for Patents
United States Patent and Trademark Office
P.O. Box 1450
Alexandria, VA 22313-1450
www.uspto.gov

WILLIAM COLLARD
COLLARD & ROE, P.C.
1077 NORTHERN BOULEVARD
ROSLYN, NY 11576

COPY MAILED
NOV 0 8 2006
OFFICE OF PETITIONS

In re Application of	:	
Courtney Standley	:	
Application No. **29/201521**	:	ON PETITION
Filing or 371(c) Date **03/17/2004**	:	
Attorney Docket Number:	:	
STANDLEY - 1 (DESIGN)	:	

This is a decision on the Petition for Revival of an Application for Patent Abandoned Unintentionally Under 37 C.F.R. § 1.137(b), filed August 3, 2006.

This Petition is hereby **granted**.

The above-identified application became abandoned for failure to timely and properly reply to the Notice of Allowance and Issue Fee Due, mailed September 26, 2005. The Notice set a non-extendable three (3) month period for reply. No reply having been received, the application became abandoned on December 27, 2005. A Notice of Abandonment was mailed March 21, 2006.

Applicant has submitted the issue and publication fees with the instant petition. Accordingly, the petition is granted.

This application is being referred to Publishing Division for processing into a patent.

Telephone inquiries concerning this decision should be directed to the undersigned at (571) 272-3232.

Derek L. Woods
Attorney
Office of Petitions

SPE RESPONSE FOR CERTIFICATE OF CORRECTION

DATE : 5-13-09

Paper No.: _____

TO SPE OF : ART UNIT 2912

SUBJECT : Request for Certificate of Correction for Appl. No.: 29/261 523 Patent No.: D507493

Please respond to this request for a certificate of correction within 7 days.

FOR IFW FILES: Please Review COC

Please review the requested changes/corrections as shown in the **COCIN** document(s) in the IFW application image. No new matter should be introduced, nor should the scope or meaning of the claims be changed.

Please complete the response (see below) and forward the completed response to scanning using document code **COCX**.

FOR PAPER FILES:

Please review the requested changes/corrections as shown in the attached certificate of correction. Please complete this form (see below) and forward it with the file to:

Certificates of Correction Branch (C of C)
Randolph Square 9C62-D
Palm Location 7580

Ennis Young
Certificates of Correction Branch
703-756-1542

Thank You For Your Assistance

The request for issuing the above-identified correction(s) is hereby:
Note your decision on the appropriate box.

- ☑ **Approved** — **All** changes apply.
- ☐ **Approved in Part** — Specify below which changes **do not** apply.
- ☐ **Denied** — State the reasons for denial below.

Comments: _____

STELLA M. REID
SUPERVISORY PATENT EXAMINER
SPE

2912
Art Unit

UNITED STATES PATENT AND TRADEMARK OFFICE

Commissioner for Patents
United States Patent and Trademark Office
P.O. Box 1450
Alexandria, VA 22313-1450
www.uspto.gov

KUSNER & JAFFE
HIGHLAND PLACE SUITE 310
6151 WILSON MILLS ROAD
HIGHLAND HEIGHTS, OH 44143

COPY MAILED

NOV 1 5 2004

OFFICE OF PETITIONS

In re Application of	:	
Masato Yamamoto	:	
Application No. 29/201,525	:	NOTICE
Filed: March 1, 2004	:	
Attorney Docket No. MM8855US		

This is a notice regarding your request for acceptance of a fee deficiency submission under 37 CFR 1.28. On September 1, 1998, the Court of Appeals for the Federal Circuit held that 37 CFR 1.28(c) is the sole provision governing the time for correction of the erroneous payment of the issue fee as a small entity. **See DH Technology v. Synergystex International, Inc. 154 F.3d 1333, 47 USPQ2d 1865 (Fed. Cir. Sept. 1, 1998).**

The Office no longer investigates or rejects original or reissue applications under 37 CFR 1.56. **1098 Off. Gaz. Pat. Office 502 (January 3, 1989)**. Therefore, nothing in this Notice is intended to imply that an investigation was done.

Your fee deficiency submission under 37 CFR 1.28 is hereby **ACCEPTED**.

Inquiries related to this communication should be directed to the Office of Petitions Staff at (571) 272-3201.

This file is being forwarded to Technology Center 2914 for examination in due course.

Sherry D. Brinkley
Petitions Examiner
Office of Petitions
Office of the Deputy Commissioner
for Patent Examination Policy

UNITED STATES PATENT AND TRADEMARK OFFICE

Commissioner for Patents
United States Patent and Trademark Office
P.O. Box 1450
Alexandria, VA 22313-1450
www.uspto.gov

FRISHAUF, HOLTZ, GOODMAN & CHICK
767 THIRD AVENUE, 25TH FLOOR
NEW YORK, NY 10017-2023

COPY MAILED

APR 2 8 2004

OFFICE OF PETITIONS

ON PETITION

In re Application of
Kenji Takahata et al.
Application No. 29/201,545
Deposited: March 16, 2004
Atty Docket 4161/LH

This is a decision on the petition under 37 CFR 1.182, filed April 1, 2004, to change the order of the names of the inventors.

The petition is **granted**.

The order of the names of the inventors will be changed as follows:

1. Kenji Takahata
2. Yo Wada
3. Tadashi Suzuki

A corrected filing receipt reflecting the correct order of the names of the inventors is attached.

This application is being forwarded to the Office of Initial Patent Examination for continued pre-examination processing.

Telephone inquiries concerning this matter may be directed to the undersigned Petitions Attorney at (703)305-4497.

Patricia Faison-Ball

Patricia Faison-Ball
Senior Petitions Attorney
Office of Petitions

UNITED STATES PATENT AND TRADEMARK OFFICE

COMMISSIONER FOR PATENTS
UNITED STATES PATENT AND TRADEMARK OFFICE
P.O. BOX 1450
ALEXANDRIA, VA 22313-1450
www.uspto.gov

MAR 29 2004

TOWNSEND AND TOWNSEND AND CREW, LLP
TWO EMBARCADERO CENTER
EIGHTH FLOOR
SAN FRANCISCO CA 94111-3834

In re Application of	:	
Li Liu	:	
Serial No.: 29/201,574	:	**REQUEST FOR EXPEDITED EXAMINATION**
Filed: March 16, 2004	:	
For: Coreless Inductor Magnetic Strip	:	
Simulacrum For Right Angle Transaction	:	
Acceptance Systems	:	

This is in response to the Request for expedited examination applicant filed March 16, 2004, to expedite the above-identified application under the provisions of 37 CFR 1.155.

Applicant has satisfied the provisions set forth in 37 CFR 1.155, thus the petition is **GRANTED**.

The application will be forwarded to the examiner for action on the merits commensurate with this decision.

Should there be any questions with regard to this letter please contact John Kittle by letter addressed to the Director, Technology Center 3700/2900, and P.O. BOX 1450 ALEXANDRIA, VA 22313-1450 or by telephone at (703) 308-0873 or by facsimile transmission at (703) 308-3139.

John E. Kittle

John E. Kittle
Director
Technology Center 3700/2900

UNITED STATES PATENT AND TRADEMARK OFFICE

UNITED STATES DEPARTMENT OF COMMERCE
United States Patent and Trademark Office
Address: COMMISSIONER FOR PATENTS
P.O. Box 1450
Alexandria, Virginia 22313-1450
www.uspto.gov

APPL NO.	FILING OR 371 (c) DATE	ART UNIT	FIL FEE REC'D	ATTY.DOCKET NO	DRAWINGS	TOT CLMS	IND CLMS
29/201,597	03/16/2004	2911	170	ACO 383	1	1	1

CONFIRMATION NO. 4549

CORRECTED FILING RECEIPT

OC000000013996409

23581
KOLISCH HARTWELL, P.C.
520 S.W. YAMHILL STREET
SUITE 200
PORTLAND, OR 97204

Date Mailed: 10/05/2004

Receipt is acknowledged of this regular Patent Application. It will be considered in its order and you will be notified as to the results of the examination. Be sure to provide the U.S. APPLICATION NUMBER, FILING DATE, NAME OF APPLICANT, and TITLE OF INVENTION when inquiring about this application. Fees transmitted by check or draft are subject to collection. Please verify the accuracy of the data presented on this receipt. **If an error is noted on this Filing Receipt, please write to the Office of Initial Patent Examination's Filing Receipt Corrections, facsimile number 703-746-9195. Please provide a copy of this Filing Receipt with the changes noted thereon. If you received a "Notice to File Missing Parts" for this application, please submit any corrections to this Filing Receipt with your reply to the Notice. When the USPTO processes the reply to the Notice, the USPTO will generate another Filing Receipt incorporating the requested corrections (if appropriate).**

Applicant(s)

Keizo Nishimura, Kobe, JAPAN;

Power of Attorney:

J. PIERRE KOLISCH–15802
John M. McCormack–26948
Peter Heuser–27902
Edward B. Anderson–30154
David Cooper–33372
Pierre Van Rysselberghe–33557
Walter Karnstein–35565
Charles H. Devoe–37305
Anton Skaugset–38617
David D'Ascenzo–39952

Domestic Priority data as claimed by applicant

Foreign Applications

If Required, Foreign Filing License Granted: 05/13/2004

The number of your priority application, to be used for filing abroad under the Paris Convention is,
US29/201,597

Projected Publication Date: None, application is not eligible for pre-grant publication

Non-Publication Request: No

Early Publication Request: No

**** SMALL ENTITY ****

Title

Joint portion of a mouth bit

Preliminary Class

D30

LICENSE FOR FOREIGN FILING UNDER
Title 35, United States Code, Section 184
Title 37, Code of Federal Regulations, 5.11 & 5.15

GRANTED

The applicant has been granted a license under 35 U.S.C. 184, if the phrase "IF REQUIRED, FOREIGN FILING LICENSE GRANTED" followed by a date appears on this form. Such licenses are issued in all applications where the conditions for issuance of a license have been met, regardless of whether or not a license may be required as set forth in 37 CFR 5.15. The scope and limitations of this license are set forth in 37 CFR 5.15(a) unless an earlier license has been issued under 37 CFR 5.15(b). The license is subject to revocation upon written notification. The date indicated is the effective date of the license, unless an earlier license of similar scope has been granted under 37 CFR 5.13 or 5.14.

This license is to be retained by the licensee and may be used at any time on or after the effective date thereof unless it is revoked. This license is automatically transferred to any related applications(s) filed under 37 CFR 1.53(d). This license is not retroactive.

The grant of a license does not in any way lessen the responsibility of a licensee for the security of the subject matter as imposed by any Government contract or the provisions of existing laws relating to espionage and the national security or the export of technical data. Licensees should apprise themselves of current regulations especially with respect to certain countries, of other agencies, particularly the Office of Defense Trade Controls, Department of State (with respect to Arms, Munitions and Implements of War (22 CFR 121-128)); the Office of Export Administration, Department of Commerce (15 CFR 370.10 (j)); the Office of Foreign Assets Control, Department of Treasury (31 CFR Parts 500+) and the Department of Energy.

NOT GRANTED

No license under 35 U.S.C. 184 has been granted at this time, if the phrase "IF REQUIRED, FOREIGN FILING LICENSE GRANTED" DOES NOT appear on this form. Applicant may still petition for a license under 37 CFR 5.12, if a license is desired before the expiration of 6 months from the filing date of the application. If 6 months has lapsed from the filing date of this application and the licensee has not received any indication of a secrecy order under 35 U.S.C. 181, the licensee may foreign file the application pursuant to 37 CFR 5.15(b).

UNITED STATES PATENT AND TRADEMARK OFFICE

Commissioner for Patents
United States Patent and Trademark Office
P.O. Box 1450
Alexandria, VA 22313-1450
www.uspto.gov

KARSTEN MANUFACTURING CORPORATION
LEGAL DEPARTMENT
2201 WEST DESERT COVE
PHOENIX AZ 85029

COPY MAILED
MAR 2 8 2006
OFFICE OF PETITIONS

In re Application of

Nicolette, et al.

Application No. 29/201,623

Filed: March 17, 2004

Attorney Docket No. KMC-616

DECISION ON PETITION

This is a decision on the petition under 37 CFR §1.137(b), November 7, 2005, to revive the above-identified application.

The petition is **dismissed**.

Any request for reconsideration of this decision must be submitted within TWO (2) MONTHS from the mail date of this decision. Extensions of time under 37 CFR 1.136(a) are permitted. The reconsideration request should include a cover letter entitled "Renewed Petition" under 37 CFR 1.137(b)."

This application became abandoned for failure to respond in a timely manner to the Notice of Allowance and Issue Fee Due mailed February 10, 2005. The notice allowed a statutory period for reply of three months from its mailing date. A proper reply was not received within the allowable period, and the application became abandoned on May 11, 2005. A Notice of Abandonment was mailed on October 25, 2005.

Effective December 1, 1997, the provisions of 37 CFR 1.137(b) now provide that where the delay in reply was unintentional, a petition may be filed to revive an abandoned application or a lapsed patent pursuant to 37 CFR 1.137(b). A grantable petition pursuant to 37 CFR 1.137(b) must be accompanied by:

(1) the required reply, unless previously filed. In a non-provisional application abandoned for failure to prosecute, the required reply may be met by the filing of a continuing application. In an application or patent, abandoned or lapsed for failure to pay the issue fee, or any portion thereof, the required reply must be the payment of the issue fee or any outstanding balance thereof.

(2) the petition fee as set forth in 37 CFR 1.17(m);

(3) a statement that the entire delay in filing the required reply from the due date for the reply until the filing of a grantable petition pursuant to 37 CFR 1.137(b) was unintentional. The Commissioner may require additional information where there is a question whether the delay was unintentional; and

(4) any terminal disclaimer (and fee set forth in 37 CFR 1.20(d)) required pursuant to 37 CFR 1.137(d).

The instant petition does not satisfy the requirements of item (4) above.

As to item (4), the terminal disclaimer was not found with the petition papers. The subject application is a design application, therefore; a terminal disclaimer is required in order to revive the application. Any renewed petition filed must be accompanied by the completed terminal disclaimer form, which is enclosed for petitioner's convenience. Pursuant to 37 CFR 1.137(d), the terminal disclaimer must dedicate to the public a terminal part of the term of any patent granted from this application that is equivalent to the period of abandonment of the application.

Further correspondence with respect to this matter should be addressed as follows:

By mail: Mail Stop Petitions
Commissioner for Patents
United States Patent and Trademark Office
Box 1450
Alexandria, VA 22313-1450

By facsimile: (571) 273-8300

Telephone inquiries concerning this matter may be directed to the undersigned at (571) 272-3222.

Kenya A. McLaughlin

Kenya A. McLaughlin
Petitions Attorney
Office of Petitions

Enclosure: Form PTO/SB/62

PTO/SB/62 (09-04)
Approved for use through 07/31/2006. OMB 0651-0031
Patent and Trademark Office; U.S. DEPARTMENT OF COMMERCE
Under the Paperwork Reduction Act of 1995, no persons are required to respond to a collection of information unless it displays a valid OMB control number.

TERMINAL DISCLAIMER TO ACCOMPANY PETITION
(Period Specified)

Docket Number (Optional)

In re Application of:

Name:

Application Number:

Filed:

For:

The owner*, _____ of _____ percent interest in the above-identified application hereby disclaims the terminal _____ months of any patent granted on the above-identified application or on any application that contains a specific reference under 35 U.S.C. 120, 121, or 365(c) to this application. This disclaimer is binding upon the grantee, its successors or assigns.

Check either box 1 or 2 below, if appropriate.

1. ☐ For submissions on behalf of an organization (e.g., corporation, partnership, university, government agency, etc.), the person signing is empowered to act on behalf of the organization.

I hereby declare that all statements made herein of my own knowledge are true and that all statements made on information and belief are believed to be true; and further, that these statements are made with knowledge that willful false statements and the like so made are punishable by fine or imprisonment, or both, under Section 1001, Title 18 of the United States Code, and that such willful false statements may jeopardize the validity of the application or any patent issuing thereon.

2. ☐ The undersigned is an attorney of record. Registration Number _____

Signature	Date
Typed or printed name	Telephone Number

☐ Terminal disclaimer fee under 37 CFR 1.20(d) included.

WARNING: Information on this form may become public. Credit card information should not be included on this form. Provide credit card information and authorization on PTO-2038.

* Certification under 37 CFR 3.73(b) is required if terminal disclaimer is signed by the assignee (owner). Form PTO/SB/96 may be used for making this certification. See MPEP § 324.

This collection of information is required by 37 CFR 1.137. The information is required to obtain or retain a benefit by the public which is to file (and by the USPTO to process) an application. Confidentiality is governed by 35 U.S.C. 122 and 37 CFR 1.11 and 1.14. This collection is estimated to take 12 minutes to complete, including gathering, preparing, and submitting the completed application form to the USPTO. Time will vary depending upon the individual case. Any comments on the amount of time you require to complete this form and/or suggestions for reducing this burden, should be sent to the Chief Information Officer, U.S. Patent and Trademark Office, U.S. Department of Commerce, P.O. Box 1450, Alexandria, VA 22313-1450. DO NOT SEND FEES OR COMPLETED FORMS TO THIS ADDRESS. **SEND TO: Commissioner for Patents, P.O. Box 1450, Alexandria, VA 22313-1450.**

If you need assistance in completing the form, call 1-800-PTO-9199 and select option 2.

UNITED STATES PATENT AND TRADEMARK OFFICE

Commissioner for Patents
United States Patent and Trademark Office
P.O. Box 1450
Alexandria, VA 22313-1450
www.uspto.gov

KARSTEN MANUFACTURING CORPORATION
LEGAL DEPARTMENT
2201 WEST DESERT COVE
PHOENIX, AZ 85029

COPY MAILED

APR 19 2006

OFFICE OF PETITIONS

In re Application of:	:	
Nicolette, et al.	:	
Application No. 29/201,623	:	DECISION ON PETITION
Filed: March 17, 2004	:	
Attorney Docket No. KMC-616	:	

This is a decision on the renewed petition under 37 CFR §1.137(b), April 6, 2006, to revive the above-identified application.

The renewed petition is **granted.**

This application became abandoned for failure to respond in a timely manner to the Notice of Allowance and Issue Fee Due mailed February 10, 2005. The notice allowed a statutory period for reply of three months from its mailing date. A proper reply was not received within the allowable period, and the application became abandoned on May 11, 2005. A Notice of Abandonment was mailed on October 25, 2005. A petition under 37 CFR 1.137(b0 was filed on November 7, 2005, and dismissed by a decision mailed March 28, 2006.

The issue fee was received on November 7, 2005. The terminal disclaimer filed April 6, 2006, is also noted.

The petition fee of $1,500.00 was charged twice. There is no fee for a renewed petition under 37 CFR 1.137(b). Deposit account 11-0222 will be refunded said amount, in due course.

The application is being forwarded to the Office of Patent Publications for further processing.

Telephone inquiries concerning this matter may be directed to the undersigned at (571) 272-3222.

Kenya A. McLaughlin

Kenya A. McLaughlin
Petitions Attorney
Office of Petitions

UNITED STATES PATENT AND TRADEMARK OFFICE

Commissioner for Patents
United States Patent and Trademark Office
P.O. Box 1450
Alexandria, VA 22313-1450
www.uspto.gov

THE COCA-COLA COMPANY
PATENT & TECHNOLOGY DEPT - NAT 19
PO BOX 1734
ATLANTA GA 30301

COPY MAILED

APR 0 3 2006

OFFICE OF PETITIONS

In re Application of		
Schreuder, et al.	:	
Application No. 29/201,626	:	DECISION ON
Filed: March 18, 2004	:	PETITION
Attorney Docket No. RC249964	:	

This is in response to the "PETITION TO REVIVE", filed January 9, 2005, which is being treated as a petition under 37 CFR 1.181 to withdraw the holding of abandonment.

The petition under 37 CFR 1.181 is **GRANTED**.

The holding of abandonment is **WITHDRAWN**.

The above-identified application was held abandoned for failure to timely file a reply to the non-final Office action mailed May 5, 2005. A Notice of Abandonment was mailed on December 14, 2005.

A review of the application file reveals that applicant did file a response on May 23, 2005.

In view of the above, the holding of abandonment is withdrawn.

Given the basis for granting this petition, no petition fee was required, and none has been charged.

The application file is being forwarded to Group Art Unit 2912 for consideration of the response filed May 23, 2005.

Telephone inquiries related to this decision should be directed to the undersigned at 571-272-3207.

Cliff Congo
Petitions Attorney
Office of Petitions

UNITED STATES PATENT AND TRADEMARK OFFICE

Commissioner for Patents
United States Patent and Trademark Office
P.O. Box 1450
Alexandria, VA 22313-1450
www.uspto.gov

DORSEY & WHITNEY
INTELLECTUAL PROPERTY DEPARTMENT
370 SEVENTEENTH STREET
SUITE 4700
DENVER, CO 80202-5647

COPY MAILED

NOV 07 2005

OFFICE OF PETITIONS

In re Application of	:	
Catherine Ross et al	:	
Application No.29/201,630	:	ON PETITION
Filed: March 17, 2004	:	
Attorney Docket No. 33630/US	:	

This is a decision on the petition under 37 CFR 1.313(c), filed October 25, 2005, which is being treated under 37 CFR 1.313(c)(3), to withdraw the above-identified application from issue after payment of the issue fee.

The petition is **GRANTED**.

The above-identified application is hereby withdrawn from issue in favor of a continued prosecution application (CPA) under 37 CFR 1.53(d).

Petitioner is advised that the issue fee paid on September 19, 2005 in the parent application is not refundable nor can it be applied towards any new Notice of Allowance which may issue on the CPA filed October 27, 2005.

Telephone inquiries should be directed to the undersigned at (571) 272-3220.

This matter is being referred to Technology Center AU 2911 for processing of the CPA and consideration of the IDS.

Wan Laymon

Wan Laymon
Petitions Examiner
Office of Petitions

UNITED STATES PATENT AND TRADEMARK OFFICE

Commissioner for Patents
United States Patent and Trademark Office
P.O. Box 1450
Alexandria, VA 22313-1450
www.uspto.gov

GIBBONS P.C.
ONE GATEWAY CENTER
NEWARK NJ 07102

COPY MAILED

FEB 2 2 2007

OFFICE OF PETITIONS

In re Application of
SOMPOLINSKY, Mark
Application No. 29/201,718
Filed: March 19, 2004
Attorney Docket No. 103293/50483

DECISION ON PETITION

This is a decision on the petition under the unintentional provisions of 37 CFR 1.137(b), filed December 5, 2006, to revive the above-identified application.

The petition is **GRANTED**.

This application became abandoned for failure to timely pay the issue fee on or before September 1, 2006, as required by the Notice of Allowance and Fee(s) Due, mailed June 1, 2006 . Accordingly, the date of abandonment of this application is September 2, 2006 .

The petition satisfies the requirements of 37 CFR 1.137(b) in that petitioner has supplied (1) the reply in the form of payment of the issue fee of $400; (2) the petition fee of $750; (3) a proper statement of unintentional delay and (4) a terminal disclaimer, including the $65 fee as set forth in 37 CFR 1.20(d)).

The terminal disclaimer filed December 5, 2006 has been entered and made of record.

The file does not indicate a change of address has been submitted, although the address given on the petition differs from the address of record. If appropriate, a change of address should be filed in accordance with MPEP 601.03. A courtesy copy of this decision is being mailed to the address given on the petition; however, the office will mail all future correspondence solely to the address of record.

Telephone inquiries concerning this decision should be directed to Monica Graves at (571) 272-7253.

This application is being referred to Publishing Division for processing into a patent.

Sherry D. Brinkley
Petitions Examiner
Office of Petitions

cc: **ABHIK A. HUQ**
1700 TWO LOGAN SQUARE
18TH AND ARCH STREETS
PHILADELPHIA, PA 19103

UNITED STATES PATENT AND TRADEMARK OFFICE

Commissioner for Patents
United States Patent and Trademark Office
P.O. Box 1450
Alexandria, VA 22313-1450
www.uspto.gov

MCGARRY BAIR PC
171 MONROE AVE NW
SUITE 600
GRAND RAPIDS MI 49503

COPY MAILED
MAY 26 2006
OFFICE OF PETITIONS

In re Application of
Davis, et al. :
Application No. 29/201,726 : DECISION ON
Filed: March 19, 2004 : PETITION
Attorney Docket No., 71189-1615 :

This is in response to the petition to revive under 37 CFR 1.137(a), or in the alternative under 37 CFR 1.137(b), filed May 12, 2006.

The petition under 37 CFR 1.137(a) is **DISMISSED**.

The petition under 37 CFR 1.137(b) is **GRANTED**.

The above-identified application became abandoned for failure to timely file a reply to the non-final Office action mailed September 15, 2005. This Office action set a shortened statutory period for reply of three (3) months. No extensions of time under 37 CFR 1.136(a) were obtained. No reply having been received, the above-identified application became abandoned on December 16, 2005. A Notice of Abandonment was mailed on May 2, 2006.

Petition Under 37 CFR 1.137(a):

A grantable petition under 37 CFR 1.137(a) must be accompanied by: (1) the reply required to the outstanding Office action or notice, unless previously filed; (2) the petition fee set forth in 37 CFR 1.17(l); (3) a showing to the satisfaction of the Commissioner that the entire delay in filing the required reply from the due date for the reply until the filing of a grantable petition pursuant to this paragraph was unavoidable; and (4) any terminal disclaimer (and fee as set forth in 37 CFR 1.20(d)) required pursuant to 37 CFR 1.137(d). The instant petition lacks item (3).

Decisions on reviving abandoned applications on the basis of "unavoidable" delay have adopted the reasonably prudent person standard in determining if the delay was unavoidable: "The word 'unavoidable' ... is applicable to ordinary human affairs, and requires no more or greater care or diligence than is generally used and observed by prudent and careful men in relation to their most important business."[1]

Moreover, delay resulting from the lack of knowledge or improper application of the patent statutes, rules of practice or the Manual of Patent Examining Procedure, however, does not constitute "unavoidable" delay.[2]

Petitioner explains that he did timely file an Amendment on October 14, 2005. However, Petitioner admits that he sent the Amendment to an incorrect facsimile number. Petitioner then categorizes the resulting abandonment and delay as "unavoidable". Petitioner' argument is not persuasive. Petitioner's sending the amendment to an incorrect facsimile number is an error that could have been avoided with the reasonable exercise of due care.

Accordingly, the entire period of delay in the above-identified application can not be characterized as "unavoidable".

The petition fee required for a petition to revive is required for the filing, not merely the grant, of the petition.[3] Accordingly, the $500 petition fee has been charged to Deposit Account No. 50-2003, as authorized.

Petition Under 37 CFR 1.137(b):

A grantable petition under 37 CFR 1.137(b) must be accompanied by: (1) the required reply, unless previously filed; (2) the petition fee as set forth in 37 CFR 1.17(m); (3) a statement that the entire delay in filing the required reply from the due date for the reply until the filing of a grantable petition pursuant to 37 CFR 1.137(b) was unintentional; and (4) any terminal disclaimer (and fee as set forth in 37 CFR 1.20(d)) required by 37 CFR 1.137(d).

With the instant petition, petitioner paid the petition fee, submitted the required reply in the form of an Amendment, and made the proper statement of unintentional delay. Petitioner also submitted a terminal disclaimer, which is a necessary requirement to revive a design application.

---

[1] In re Mattulath, 38 App. D.C. 497, 514-15 (1912)(*quoting* Ex parte Pratt, 1887 Dec. Comm'r Pat. 31, 32-33 (1887)); see also Winkler v. Ladd, 221 F. Supp. 550, 552, 138 U.S.P.Q. 666, 167-68 (D.D.C. 1963), aff'd, 143 U.S.P.Q. 172 (D.C. Cir. 1963); Ex parte Henrich, 1913 Dec. Comm'r Pat. 139, 141 (1913).

[2] See Haines, 673 F. Supp. at 317, 5 U.S.P.Q. 2d at 1132; Vincent v. Mossinghoff, 230 U.S.P.Q. 621, 624 (D.D.C. 1985); Smith v. Diamond, 209 U.S.P.Q. 1091 (D.D.C. 1981); Potter v. Dann, 201 U.S.P.Q. 574 (D.D.C. 1978); Ex parte Murray, 1891 Dec. Comm'r Pat. 130, 131 (1891).

[3] See MPEP 711.03(c)(II)(B).

The $1500 petition fee has been charged to Deposit Account No. 50-2003, as authorized.

The application file is being forwarded to the Group Art Unit 2915 for consideration of the Amendment, filed May 12, 2006.

Telephone inquiries related to this decision should be directed to the undersigned at 571-272-3207.

Cliff Congo
Petitions Attorney
Office of Petitions

UNITED STATES PATENT AND TRADEMARK OFFICE

Commissioner for Patents
United States Patent and Trademark Office
P.O. Box 1450
Alexandria, VA 22313-1450
www.uspto.gov

JUN 2 1 2004

BANNER & WITCOFF
1001 G STREET N W
SUITE 1100
WASHINGTON DC 20001

In re Application of	:	
Brad Wahoske et al	:	
Serial No.: 29/201,766	:	DECISION ON PETITION
Filed: March 22, 2004	:	
For: Portion Of A Shoe Sole	:	

This is in response to the petition applicant filed on May 18, 2004 to make the above-identified application special under the provisions of 37 CFR 1.102(d).

Applicant has satisfied the provisions set forth in M.P.E.P. 708.02, VIII, thus the petition is **GRANTED**.

The application will be forwarded to the examiner for action on the merits commensurate with this decision.

Should there be any questions with regard to this letter please contact John Kittle by letter addressed to the Director, Technology Center 3700/2900, P.O. Box 1450 Alexandria, VA 22313-1450, or by telephone at (703) 308-0873 or by facsimile transmission at (703) 308-3139.

John E. Kittle

John E. Kittle
Director
Technology Center 3700/2900

UNITED STATES PATENT AND TRADEMARK OFFICE

Commissioner for Patents
United States Patent and Trademark Office
P.O. Box 1450
Alexandria, VA 22313-1450
www.uspto.gov

SQUIRE SANDERS & DEMPSEY
14TH FLOOR
801 S. FIGUEROA STREET
LOS ANGELES, CA 90017-5554

COPY MAILED

FEB 04 2005

OFFICE OF PETITIONS

In re Application of	:	
Lubov Azria	:	
Application No. 29/201,771	:	NOTICE
Filed: March 19, 2004	:	
Attorney Docket No. 41130-00416	:	

This is a notice regarding your request for acceptance of a fee deficiency submission under 37 CFR 1.28. On September 1, 1998, the Court of Appeals for the Federal Circuit held that 37 CFR 1.28(c) is the sole provision governing the time for correction of the erroneous payment of the issue fee as a small entity. **See DH Technology v. Synergystex International, Inc. 154 F.3d 1333, 47 USPQ2d 1865 (Fed. Cir. Sept. 1, 1998).**

The Office no longer investigates or rejects original or reissue applications under 37 CFR 1.56. **1098 Off. Gaz. Pat. Office 502 (January 3, 1989)**. Therefore, nothing in this Notice is intended to imply that an investigation was done.

Your fee deficiency submission under 37 CFR 1.28 is hereby **ACCEPTED**.

Inquiries related to this communication should be directed to the Office of Petitions Staff at (703) 305-9285.

This matter is being referred to Publishing Division.

Wan Laymon
Petitions Examiner
Office of Petitions
Office of the Deputy Commissioner
for Patent Examination Policy

UNITED STATES PATENT AND TRADEMARK OFFICE

Commissioner for Patents
United States Patent and Trademark Office
P.O. Box 1450
Alexandria, VA 22313-1450
www.uspto.gov

JUN 28 2004

BANNER & WITCOFF
1001 G STREET N W
SUITE 1100
WASHINGTON DC 20001

In re Application of	:	
Susan Sokolowski	:	
Serial No.: 29/201,773	:	DECISION ON PETITION
Filed: March 22, 2004	:	
For: Portion of a Shoe Midsole	:	

This is in response to the petition applicant filed on May 20, 2004 to make the above-identified application special under the provisions of 37 CFR 1.102(d).

Applicant has satisfied the provisions set forth in M.P.E.P. 708.02, VIII, thus the petition is **GRANTED**.

The application will be forwarded to the examiner for action on the merits commensurate with this decision.

Should there be any questions with regard to this letter please contact John Kittle by letter addressed to the Director, Technology Center 3700/2900, P.O. Box 1450 Alexandria, VA 22313-1450, or by telephone at (703) 308-0873 or by facsimile transmission at (703) 308-3139.

John E. Kittle

John E. Kittle
Director
Technology Center 3700/2900

UNITED STATES PATENT AND TRADEMARK OFFICE

Commissioner for Patents
United States Patent and Trademark Office
P.O. Box 1450
Alexandria, VA 22313-1450
www.uspto.gov

JUN 21 2004

BANNER & WITCOFF
1001 G STREET N W
SUITE 1100
WASHINGTON DC 20001

In re Application of	:	
Susan Sokolowski	:	
Serial No.: 29/201,774	:	DECISION ON PETITION
Filed: March 22, 2004	:	
For: Portion Of A Shoe Midsole	:	

This is in response to the petition applicant filed on March 22, 2004 to make the above-identified application special under the provisions of 37 CFR 1.102(d).

Applicant has satisfied the provisions set forth in M.P.E.P. 708.02, VIII, thus the petition is **GRANTED**.

The application will be forwarded to the examiner for action on the merits commensurate with this decision.

Should there be any questions with regard to this letter please contact John Kittle by letter addressed to the Director, Technology Center 3700/2900, P.O. Box 1450 Alexandria, VA 22313-1450, or by telephone at (703) 308-0873 or by facsimile transmission at (703) 308-3139.

John E. Kittle
Director
Technology Center 3700/2900

UNITED STATES PATENT AND TRADEMARK OFFICE

Commissioner for Patents
United States Patent and Trademark Office
P.O. Box 1450
Alexandria, VA 22313-1450
www.uspto.gov

JUN 28 2004

BANNER & WITCOFF
1001 G STREET N W
SUITE 1100
WASHINGTON DC 20001

In re Application of	:	
Susan Sokolowski	:	
Serial No.: 29/201,775	:	DECISION ON PETITION
Filed: March 22, 2004	:	
For: Portion of a Shoe Midsole	:	

This is in response to the petition applicant filed on May 20, 2004 to make the above-identified application special under the provisions of 37 CFR 1.102(d).

Applicant has satisfied the provisions set forth in M.P.E.P. 708.02, VIII, thus the petition is **GRANTED**.

The application will be forwarded to the examiner for action on the merits commensurate with this decision.

Should there be any questions with regard to this letter please contact John Kittle by letter addressed to the Director, Technology Center 3700/2900, P.O. Box 1450 Alexandria, VA 22313-1450, or by telephone at (703) 308-0873 or by facsimile transmission at (703) 308-3139.

John E. Kittle
Director
Technology Center 3700/2900

UNITED STATES PATENT AND TRADEMARK OFFICE

Commissioner for Patents
United States Patent and Trademark Office
P.O. Box 1450
Alexandria, VA 22313-1450
www.uspto.gov

HOGAN & HARTSON
IP GROUP, COLUMBIA SQUARE
555 THIRTEENTH STREET, N.W.
WASHINGTON, DC 20004

COPY MAILED

JAN 0 3 2005

OFFICE OF PETITIONS

In re Application of	:	
Nate Cervantes et al	:	
Application No. 29/201,874	:	NOTICE
Filed: March 23, 2004	:	
Attorney Docket No. 19463-0009	:	

This is a notice regarding your request for acceptance of a fee deficiency submission under 37 CFR 1.28. On September 1, 1998, the Court of Appeals for the Federal Circuit held that 37 CFR 1.28(c) is the sole provision governing the time for correction of the erroneous payment of the issue fee as a small entity. **See DH Technology v. Synergystex International, Inc. 154 F.3d 1333, 47 USPQ2d 1865 (Fed. Cir. Sept. 1, 1998).**

The Office no longer investigates or rejects original or reissue applications under 37 CFR 1.56. **1098 Off. Gaz. Pat. Office 502 (January 3, 1989)**. Therefore, nothing in this Notice is intended to imply that an investigation was done.

Your fee deficiency submission under 37 CFR 1.28 is hereby **ACCEPTED**.

Inquiries related to this communication should be directed to Wan Laymon at (571) 272-3220.

This matter is being referred to Publishing Division.

Wan Laymon

Wan Laymon
Petitions Examiner
Office of Petitions
Office of the Deputy Commissioner
for Patent Examination Policy

UNITED STATES PATENT AND TRADEMARK OFFICE

Commissioner for Patents
United States Patent and Trademark Office
P.O. Box 1450
Alexandria, VA 22313-1450
www.uspto.gov

HOGAN & HARTSON LLP
IP GROUP, COLUMBIA SQUARE
555 THIRTEENTH STREET, N.W.
WASHINGTON, DC 20004

COPY MAILED

MAY 0 4 2005

OFFICE OF PETITIONS

In re Application of
Nate Cervantes, et al.
Application No. 29/201,875
Filed: March 23, 2004
Attorney Docket No. 19463-0008

ON PETITION

This is a notice regarding your request for acceptance of a fee deficiency submission under 37 CFR 1.28. On September 1, 1998, the Court of Appeals for the Federal Circuit held that 37 CFR 1.28(c) is the sole provision governing the time for correction of the erroneous payment of the issue fee as a small entity. **See DH Technology v. Synergystex International, Inc. 154 F.3d 1333, 47 USPQ2d 1865 (Fed. Cir. Sept. 1, 1998).**

The Office no longer investigates or rejects original or reissue applications under 37 CFR 1.56. **1098 Off. Gaz. Pat. Office 502 (January 3, 1989).** Therefore, nothing in this Notice is intended to imply that an investigation was done.

Your fee deficiency submission under 37 CFR 1.28 is hereby **ACCEPTED**.

Telephone inquiries concerning this decision should be directed to the undersigned at (571) 272-3229.

The application matter is being referred to the Publication Division.

Retta Williams

Retta Williams
Petitions Examiner
Office of Petitions
Office of the Deputy Commissioner
for Patent Examination Policy

UNITED STATES PATENT AND TRADEMARK OFFICE

Commissioner for Patents
United States Patent and Trademark Office
P.O. Box 1450
Alexandria, VA 22313-1450
www.uspto.gov

RAYMOND NATHANIEL ERVIN
RAYMOND N. ERVIN, LTD.
4238 NORTH ARLINGTON HEIGHTS ROAD
SUITE B-135
ARLINGTON HEIGHTS, IL 60004

COPY MAILED

OCT 0 5 2004

OFFICE OF PETITIONS

ON PETITION

In re Application of :
Andrew and Linda Berger :
Application No. 29/201,908 :
Filed: March 22, 2004 :
Attorney Docket No. AX-O4-DES001 :

This is a decision on the petition filed June 29, 2004, to accord the above-identified application a filing date of March 22, 2004.

On March 22, 2004, the application was filed.

On June 16, 2004, the Office of Initial Patent Examination mailed a Notice stating that drawings were not present and that a filing date had not been accorded and the filing date would be the date of receipt of drawings.

In response, the present petition was filed alleging that 3 sheets of drawings were deposited on March 22, 2004. When the application was filed, the attorney wisely and prudently submitted a postcard to serve as a receipt for the items listed on the postcard. Petitioner has submitted a copy of the postcard receipt which acknowledges receipt of 3 sheets of drawings on March 22, 2004.[1] Petitioner has also submitted a copy of the missing documentation - 3 sheets of drawings.

Upon review of the record, the drawings deposited on March 22, 2004, have not been located. However, the evidence is convincing that the application papers deposited on March 22, 2004, included the drawings and that the drawings were subsequently misplaced in the PTO. Therefore, the application is complete and entitled to a filing date of March 22, 2004.

In view of the above, the petition is **granted**. The copy of the drawings submitted with the petition will be used for examination purposes.

A refund of the petition fee of $130 will be scheduled.

The Notice mailed June 16, 2004, was sent in error and is hereby vacated.

The Office of Initial Patent Examination will be notified to further process the application using a filing date of March 22, 2004, using the application papers filed on March 22, 2004, and the copy of the three sheets of drawings filed on June 29, 2004.

---

[1] Evidence of receipt of any correspondence filed in the Patent and Trademark Office can be obtained by submitting a self addressed post card properly itemizing and identifying the paper or papers being filed. Upon receipt of the correspondence, the Patent and Trademark Office will check the listing on the post card against the papers submitted, making sure that all items listed are present and will then stamp the postcard with an Official date stamp and place the post card in the outgoing mail. "A post card receipt which itemizes and properly identifies the papers which are being filed serves as *prima facie* evidence of receipt in the PTO of all items listed thereon by the PTO." M.P.E.P. § 503.

Telephone inquiries may be directed to Petitions Attorney Steven Brantley at (571) 272-3203.

Charles Steven Brantley
Senior Petitions Attorney
Office of Petitions

UNITED STATES PATENT AND TRADEMARK OFFICE

UNITED STATES DEPARTMENT OF COMMERCE
United States Patent and Trademark Office
Address: COMMISSIONER FOR PATENTS
P.O. Box 1450
Alexandria, Virginia 22313-1450
www.uspto.gov

APPLICATION NO.	FILING DATE	FIRST NAMED INVENTOR	ATTORNEY DOCKET NO.	CONFIRMATION NO.
29/201,908	03/22/2004	Andrew L. Berger	AX-04-DES001	1658

31992 7590 01/13/2006

RAYMOND NATHANIEL ERVIN,
RAYMOND N. ERVIN, LTD.
4238 NORTH ARLINGTON HEIGHTS ROAD
SUITE B-135
ARLINGTON HEIGHTS, IL 60004-1304

EXAMINER
BROOKS, CATHRON C

ART UNIT	PAPER NUMBER
2913.	

DATE MAILED: 01/13/2006

Please find below and/or attached an Office communication concerning this application or proceeding.

UNITED STATES PATENT AND TRADEMARK OFFICE

COMMISSIONER FOR PATENTS
UNITED STATES PATENT AND TRADEMARK OFFICE
P.O. BOX 1450
ALEXANDRIA, VA 22313-1450
www.uspto.gov

In re Patent No. BERGER ET AL. Issue Date: na Appl No.: 29/201,908 Filed: March 22, 2004 Expandable Corner Shelf	**DECISION GRANTING PETITION** *37 CFR 1.324*

This is a decision on the petition filed 12/15/05 to correct inventorship under 37 CFR 1.324.

The petition is granted.

The patented file is being forwarded to Certificate of Corrections Branch for issuance of a certificate naming only the actual inventor or inventors.

Caron Veynar
Supervisory Patent Examiner
Art Unit 2913
Technology Center 2900

RAYMOND NATHANIEL ERVIN,
RAYMOND N. ERVIN, LTD.
4238 NORTH ARLINGTON HEIGHTS ROAD
SUITE B-135
ARLINGTON HEIGHTS, IL 60004-1304

Cathron C. Brooks
Primary Examiner
Art Unit: 2913

UNITED STATES PATENT AND TRADEMARK OFFICE

Commissioner for Patents
United States Patent and Trademark Office
P.O. Box 1450
Alexandria, VA 22313-1450
www.uspto.gov

POLLACK, P.C.
THE CHRYSLER BUILDING
132 EAST 43RD STREET, SUITE 760
NEW YORK NY 10017

COPY MAILED
APR 21 2006
OFFICE OF PETITIONS

In re Application of Targetti :
Application No. 29/201,911 : Decision on Petition
Filing Date: March 22, 2004 :
Attorney Docket No. 1014.1030DES :

This is a decision on the petition under 37 CFR 1.181, filed February 21, 2006, to withdraw the holding of abandonment.

The petition is **granted.**

The above-identified application became abandoned for failure to submit the issue fee and publication fee in a timely manner in reply to the Notice of Allowance mailed June 28, 2005, which set a statutory period for reply of three (3) months. Accordingly, the above-identified application became abandoned on September 29, 2005. A Notice of Abandonment was mailed on December 13, 2005.

Petitioner contends, and has established, the Notice of Allowance was never received. Therefore, the Notice of Abandonment is hereby vacated and the holding of abandonment withdrawn.

The Office of Publications will be informed of the instant decision and will issue the application as a patent in due course.

Telephone inquiries regarding this communication should be directed to Petitions Attorney Steven Brantley at (571) 272-3203.

Charles Steven Brantley
Senior Petitions Attorney
Office of Petitions

UNITED STATES PATENT AND TRADEMARK OFFICE

Commissioner for Patents
United States Patent and Trademark Office
P.O. Box 1450
Alexandria, VA 22313-1450
www.uspto.gov

POLLACK, P.C.
THE CHRYSLER BUILDING
132 EAST 43RD STREET, SUITE 760
NEW YORK, NY 10017

COPY MAILED

OCT 3 1 2008

OFFICE OF PETITIONS

In re Patent No. D,526,735	:	
Issue Date: August 15, 2006	:	
Application No. 29/201,911	:	NOTICE
Filed: March 22, 2004	:	
Attorney Docket No. 1014.1030DES	:	

This is a notice regarding your request for acceptance of a fee deficiency submission under 37 CFR 1.28.

The Office no longer investigates or rejects original or reissue patent under 37 CFR 1.56. **1098 Off. Gaz. Pat. Office 502 (January 3, 1989)**. Therefore, nothing in this Notice is intended to imply that an investigation was done.

Your fee deficiency submission under 37 CFR 1.28 is hereby **ACCEPTED**.

This patent is no longer entitled to small entity status. Accordingly, all future fees paid in this patent must be paid at the large entity rate.

Inquiries related to this communication should be directed to the undersigned at (571) 272-6059.

The patent file will be forwarded to the Files Repository.

Alicia Kelley
Petitions Examiner
Office of Petitions

UNITED STATES PATENT AND TRADEMARK OFFICE

Commissioner for Patents
United States Patent and Trademark Office
P.O. Box 1450
Alexandria, VA 22313-1450
www.uspto.gov

BRYAN CAVE LLP
TWO NORTH CENTRAL AVENUE,
SUITE 2200
PHOENIX, AZ 85004

COPY MAILED

JAN 3 1 2007

OFFICE OF PETITIONS

In re Application of

Sanderholm, et al.

Application No. 29/201,921

Filing Date: March 22, 2004

Attorney Docket No. 14398-0002

ON PETITION

This is a decision on the petition under 37 CFR §1.137(b), filed August 31, 2006, in the above-identified application.

The petition is **dismissed**.

Any request for reconsideration of this decision must be submitted within TWO (2) MONTHS from the mail date of this decision. Extensions of time under 37 CFR 1.136(a) are permitted. The reconsideration request should include a cover letter entitled "Renewed Petition" under 37 CFR 1.137(b)."

This application became abandoned for failure to respond in a timely manner to the Notice of Allowance and Issue Fee Due mailed July 8, 2005. The notice allowed a statutory period for reply of three months from its mailing date. An issue fee payment was received on September 29, 2005, but was not accompanied by the Issue Fee Transmittal Form PTOL 85-B. The application became abandoned on October 9, 2005. A Notice of Abandonment was mailed on May 30, 2006.

It is noted that petitioner requests that the instant petition fee be refunded. It is noted that a grantable petition under 37 CFR 1.137(b), must be accompanied by the petition fee. In this case, the petition under 37 CFR 1.137(b) is appropriate because the application was properly held abandoned because Form PTOL-85b did not accompany the issue fee payment. The Notice of Allowance and Issue Fee Due, mailed July 8, 2005, provides, in pertinent part, that, "[t]he PTOL-85b (or an Equivalent) must be returned within this period even if no fee is due or the application will be regarded as abandoned." Neither Form PTOL-85B, or its equivalent accompanied the issue fee payment. Accordingly, the application was properly abandoned and the petition under 37 CFR 1.137(b), along with the required fee, is an appropriate way to revive the application.

Effective December 1, 1997, the provisions of 37 CFR 1.137(b) now provide that where the delay in reply was unintentional, a petition may be filed to revive an abandoned application or a lapsed patent pursuant to 37 CFR 1.137(b). A grantable petition pursuant to 37 CFR 1.137(b) must be accompanied by:

(1) the required reply, unless previously filed. In a non-provisional application

abandoned for failure to prosecute, the required reply may be met by the filing of a continuing application. In an application or patent, abandoned or lapsed for failure to pay the issue fee, or any portion thereof, the required reply must be the payment of the issue fee or any outstanding balance thereof.

(2) the petition fee as set forth in 37 CFR 1.17(m);

(3) a statement that the entire delay in filing the required reply from the due date for the reply until the filing of a grantable petition pursuant to 37 CFR 1.137(b) was unintentional. The Commissioner may require additional information where there is a question whether the delay was unintentional; and

(4) any terminal disclaimer (and fee set forth in 37 CFR 1.20(d)) required pursuant to 37 CFR 1.137(d).

The instant petition does not satisfy the requirements of items (1) and (4) above.

As to item (1), Form PTOL-85B did not accompany the petition. The renewed petition must be accompanied by Form PTOL-85B to be considered grantable. A copy of the form is enclosed for petitioner's convenience.

As to item (4), the terminal disclaimer was not found with the petition papers. The subject application is a design application, therefore; a terminal disclaimer is required in order to revive the application. Any renewed petition filed must be accompanied by the completed terminal disclaimer form, which is enclosed for petitioner's convenience. Pursuant to 37 CFR 1.137(d), the terminal disclaimer must dedicate to the public a terminal part of the term of any patent granted from this application that is equivalent to the period of abandonment of the application.

Further correspondence with respect to this matter should be addressed as follows:

By mail: Mail Stop Petitions
Commissioner for Patents
United States Patent and Trademark Office
Box 1450
Alexandria, VA 22313-1450

By facsimile: (571) 273-8300

Telephone inquiries concerning this matter may be directed to the undersigned at (571) 272-3222.

Kenya A. McLaughlin
Petitions Attorney
Office of Petitions

Enclosures: Form PTOL-85(b) mailed July 8, 2005
Terminal Disclaimer

PART B - FEE(S) TRANSMITTAL

Complete and send this form, together with applicable fee(s), to: Mail **Mail Stop ISSUE FEE**
Commissioner for Patents
P.O. Box 1450
Alexandria, Virginia 22313-1450
or Fax (571) 273-2885

INSTRUCTIONS: This form should be used for transmitting the ISSUE FEE and PUBLICATION FEE (if required). Blocks 1 through 5 should be completed where appropriate. All further correspondence including the Patent, advance orders and notification of maintenance fees will be mailed to the current correspondence address as indicated unless corrected below or directed otherwise in Block 1, by (a) specifying a new correspondence address; and/or (b) indicating a separate "FEE ADDRESS" for maintenance fee notifications.

CURRENT CORRESPONDENCE ADDRESS (Note: Use Block 1 for any change of address)

46019 7590 07/08/2005

BRYAN CAVE LLP
TWO NORTH CENTRAL AVENUE, SUITE 2200
PHOENIX, AZ 85004

Note: A certificate of mailing can only be used for domestic mailings of the Fee(s) Transmittal. This certificate cannot be used for any other accompanying papers. Each additional paper, such as an assignment or formal drawing, must have its own certificate of mailing or transmission.

Certificate of Mailing or Transmission
I hereby certify that this Fee(s) Transmittal is being deposited with the United States Postal Service with sufficient postage for first class mail in an envelope addressed to the Mail Stop ISSUE FEE address above, or being facsimile transmitted to the USPTO (571) 273-2885, on the date indicated below.

(Depositor's name)
(Signature)
(Date)

APPLICATION NO.	FILING DATE	FIRST NAMED INVENTOR	ATTORNEY DOCKET NO.	CONFIRMATION NO.
29/201,921	03/22/2004	Davin Saderholm	14398-0002	1663

TITLE OF INVENTION: GOGGLE

APPLN. TYPE	SMALL ENTITY	ISSUE FEE	PUBLICATION FEE	TOTAL FEE(S) DUE	DATE DUE
nonprovisional	YES	$400	$0	$400	10/11/2005

EXAMINER	ART UNIT	CLASS-SUBCLASS
BARKAI, RAPHAEL	2915	D16-300000

1. Change of correspondence address or indication of "Fee Address" (37 CFR 1.363).
- ☐ Change of correspondence address (or Change of Correspondence Address form PTO/SB/122) attached.
- ☐ "Fee Address" indication (or "Fee Address" Indication form PTO/SB/47; Rev 03-02 or more recent) attached. **Use of a Customer Number is required.**

2. For printing on the patent front page, list
(1) the names of up to 3 registered patent attorneys or agents OR, alternatively,
(2) the name of a single firm (having as a member a registered attorney or agent) and the names of up to 2 registered patent attorneys or agents. If no name is listed, no name will be printed.

1 _____
2 _____
3 _____

3. ASSIGNEE NAME AND RESIDENCE DATA TO BE PRINTED ON THE PATENT (print or type)

PLEASE NOTE: Unless an assignee is identified below, no assignee data will appear on the patent. If an assignee is identified below, the document has been filed for recordation as set forth in 37 CFR 3.11. Completion of this form is NOT a substitute for filing an assignment.

(A) NAME OF ASSIGNEE (B) RESIDENCE: (CITY and STATE OR COUNTRY)

Please check the appropriate assignee category or categories (will not be printed on the patent) : ☐ Individual ☐ Corporation or other private group entity ☐ Government

4a. The following fee(s) are enclosed:
- ☐ Issue Fee
- ☐ Publication Fee (No small entity discount permitted)
- ☐ Advance Order - # of Copies _____

4b. Payment of Fee(s):
- ☐ A check in the amount of the fee(s) is enclosed.
- ☐ Payment by credit card. Form PTO-2038 is attached.
- ☐ The Director is hereby authorized by charge the required fee(s), or credit any overpayment, to Deposit Account Number _____ (enclose an extra copy of this form).

5. **Change in Entity Status** (from status indicated above)
- ☐ a. Applicant claims SMALL ENTITY status. See 37 CFR 1.27.
- ☐ b. Applicant is no longer claiming SMALL ENTITY status. See 37 CFR 1.27(g)(2).

The Director of the USPTO is requested to apply the Issue Fee and Publication Fee (if any) or to re-apply any previously paid issue fee to the application identified above.
NOTE: The Issue Fee and Publication Fee (if required) will not be accepted from anyone other than the applicant; a registered attorney or agent; or the assignee or other party in interest as shown by the records of the United States Patent and Trademark Office.

Authorized Signature _____ Date _____

Typed or printed name _____ Registration No. _____

This collection of information is required by 37 CFR 1.311. The information is required to obtain or retain a benefit by the public which is to file (and by the USPTO to process) an application. Confidentiality is governed by 35 U.S.C. 122 and 37 CFR 1.14. This collection is estimated to take 12 minutes to complete, including gathering, preparing, and submitting the completed application form to the USPTO. Time will vary depending upon the individual case. Any comments on the amount of time you require to complete this form and/or suggestions for reducing this burden, should be sent to the Chief Information Officer, U.S. Patent and Trademark Office, U.S. Department of Commerce, P.O. Box 1450, Alexandria, Virginia 22313-1450. DO NOT SEND FEES OR COMPLETED FORMS TO THIS ADDRESS. SEND TO: Commissioner for Patents, P.O. Box 1450, Alexandria, Virginia 22313-1450.

Under the Paperwork Reduction Act of 1995, no persons are required to respond to a collection of information unless it displays a valid OMB control number.

PTO/SB/63 (09-06)
Approved for use through 03/31/2007. OMB 0651-0031
U.S. Patent and Trademark Office; U.S. DEPARTMENT OF COMMERCE
Under the Paperwork Reduction Act of 1995, no persons are required to a collection of information unless it displays a valid OMB control number.

TERMINAL DISCLAIMER TO ACCOMPANY PETITION

Docket Number (Optional)

In re Application of:

Name:

Application Number:

Filed:

For:

The owner*, _____ of _____ percent interest in the above-identified application hereby disclaims a terminal part of the term of any patent granted the above-identified application equivalent to: (1) if the above-identified application is a design application, the period of abandonment of the above-identified application, and (2) if the above-identified application is a utility or plant application, the lesser of: (a) the period of abandonment of the application; or (b) the period extending beyond twenty years from the date on which the above-identified application was filed in the United States or, if the application contains a specific reference to an earlier filed application(s) under 35 U.S.C. 120, 121, or 365(c), from the date on which the earliest such application was filed. This disclaimer also applies to any patent granted on a utility or plant application filed before June 8, 1995, or a design application, that contains a specific reference under 35 U.S.C. 120, 121, or 365(c) to the above-identified application. This disclaimer is binding upon the grantee, and its successors or assigns.

Check either box 1 or 2 below, if appropriate.

1. ☐ For submissions on behalf of an organization (e.g., corporation, partnership, university, government agency, etc.), the undersigned is empowered to act on behalf of the organization.

2. ☐ The undersigned is an attorney or agent of record. Registration Number_____.

_____	_____
Signature	Date
_____	_____
Typed or Printed Name	Telephone Number

☐ Terminal disclaimer fee under 37 CFR 1.20(d) included.

WARNING: Information on this form may become public. Credit card information should not be included on this form. Provide credit card information and authorization on PTO-2038.

* Statement under 37 CFR 3.73(b) is required if terminal disclaimer is signed by the assignee (owner). Form PTO/SB/96 may be used for making this certification. See MPEP § 324.

This collection of information is required by 37 CFR 1.137. The information is required to obtain or retain a benefit by the public which is to file (and by the USPTO to process) an application. Confidentiality is governed by 35 U.S.C. 122 and 37 CFR 1.11 and 1.14. This collection is estimated to take 12 minutes to complete, including gathering, preparing, and submitting the completed application form to the USPTO. Time will vary depending upon the individual case. Any comments on the amount of time you require to complete this form and/or suggestions for reducing this burden, should be sent to the Chief Information Officer, U.S. Patent and Trademark Office, U.S. Department of Commerce, P.O. Box 1450, Alexandria, VA 22313-1450. DO NOT SEND FEES OR COMPLETED FORMS TO THIS ADDRESS. **SEND TO: Commissioner for Patents, P.O. Box 1450, Alexandria, VA 22313-1450.**

If you need assistance in completing the form, call 1-800-PTO-9199 and select option 2.

UNITED STATES PATENT AND TRADEMARK OFFICE

Commissioner for Patents
United States Patent and Trademark Office
P.O. Box 1450
Alexandria, VA 22313-1450
www.uspto.gov

BRYAN CAVE LLP
TWO NORTH CENTRAL AVENUE
SUITE 2200
PHOENIX, AZ 85004

COPY MAILED

MAY 14 2007

OFFICE OF PETITIONS

In re Application of

Sanderholm, et al.

Application No. 29/201,921

Filed: March 22, 2004

Attorney Docket No. 14398-0002

: DECISION ON

: PETITION

This is a decision on the renewed petition under 37 CFR 1.137(b), filed March 28, 2007, to revive the above-identified application.

The renewed petition is **granted**.

This application became abandoned for failure to respond in a timely manner to the Notice of Allowance and Issue Fee Due mailed July 8, 2005. The notice allowed a statutory period for reply of three months from its mailing date. No reply was received within the allowable period, and the application became abandoned on October 9, 2005. A Notice of Abandonment was mailed on May 30, 2006. A petition under 37 CFR 1.137(b) was filed on August 31, 2006, and dismissed by a decision mailed January 31, 2007.

The terminal disclaimer, filed March 28, 2007, is noted.

Form PTOL-85B, filed March 28, 2007, is also noted.

The application is being forwarded to the Office of Patent Publications for further processing.

Telephone inquiries concerning this matter may be directed to the undersigned at (571) 272-3222.

Kenya A. McLaughlin
Petitions Attorney
Office of Petitions

UNITED STATES PATENT AND TRADEMARK OFFICE

Commissioner for Patents
United States Patent and Trademark Office
P.O. Box 1450
Alexandria, VA 22313-1450
www.uspto.gov

JJGJR.: 06-06

Paper No: __

POLLACK, P.C.
THE CHRYSLER BUILDING
132 EAST 43RD STREET, SUITE 760
NEW YORK NY 10017

COPY MAILED

JUN 12 2006

OFFICE OF PETITIONS

In re Application of	:	
Godoy.	:	
Application No. 29/201,945	:	ON PETITION
Filed: 23 March, 2004	:	
Attorney Docket No. 741014.1015DIV	:	

This is a decision on a petition filed on 25 November, 2005, under 37 C.F.R. §1.137(b).

For the reasons set forth below, the petition under 37 C.F.R. §1.137(b) is **GRANTED**.

BACKGROUND

The record indicates:

- Petitioner failed to reply timely and properly to the Notice of Allowance/Allowability and Fees Due (Drawings Requirement) mailed on 27 May, 2005, with reply due under a non-extendable deadline on or before Monday, 29 August, 2005;
- the application went abandoned by operation of law after midnight 27 August, 2005;
- the Office mailed the Notice of Abandonment on 19 October, 2005;
- Petitioner filed the instant petition (with fee) on 25 November, 2005, with a reply in the form drawings, statement of unintentional delay and a terminal disclaimer and fee–thus

Petitioner appears to have satisfied the regulatory requirements under 37 C.F.R. §1.137(b).

STATUTES, REGULATIONS AND ANALYSIS

Congress has authorized the Commissioner to "revive an application if the delay is shown to the satisfaction of the Commissioner to have been "unavoidable." 35 U.S.C. §133 (1994).[1]

The regulations at 37 C.F.R. §1.137(a) and (b) set forth the requirements for a petitioner to revive a previously unavoidably or unintentionally, respectively, abandoned application under this congressional grant of authority. The language of 35 U.S.C. §133 and 37 C.F.R. §1.137(a) is clear, unambiguous, and without qualification: the delay in tendering the reply to the outstanding Office action, as well as filing the first petition seeking revival, must have been unavoidable for the reply now to be accepted on petition.[2]

Delays in responding properly raise the question whether delays are unavoidable.[3] Where there is a question whether the delay was unavoidable, Petitioners must meet the burden of establishing that the delay was unavoidable within the meaning of 35 U.S.C. §133 and 37 C.F.R. §1.137(a).[4] And the Petitioner must be diligent in attending to the matter.[5] Failure to do so does not constitute the care required under Pratt, and so cannot satisfy the test for diligence and due care.

(By contrast, unintentional delays are those that do not satisfy the very strict statutory and regulatory requirements of unavoidable delay, and also, by definition, are not intentional.[6]))

---

[1] 35 U.S.C. §133 provides:
35 U.S.C. §133 Time for prosecuting application.
Upon failure of the applicant to prosecute the application within six months after any action therein, of which notice has been given or mailed to the applicant, or within such shorter time, not less than thirty days, as fixed by the Commissioner in such action, the application shall be regarded as abandoned by the parties thereto, unless it be shown to the satisfaction of the Commissioner that such delay was unavoidable.

[2] Therefore, by example, an unavoidable delay in the payment of the Filing Fee might occur if a reply is shipped by the US Postal Service, but due to catastrophic accident, the delivery is not made.

[3] See: *Changes to Patent Practice and Procedure*; *Final Rule Notice*, 62 *Fed. Reg.* at 53158-59 (October 10, 1997), 1203 *Off. Gaz. Pat. Office* at 86-87 (October 21, 1997).

[4] See: In re Application of G, 11 USPQ2d 1378, 1380 (Comm'r Pats. 1989).

[5] See: Diligence in Filing Petitions to Revive and Petitions to Withdraw the Holding of Abandonment, 1124 Off. Gaz. Pat. Office 33 (March 19, 1991). It was and is Petitioner's burden to exercise diligence in seeking either to have the holding of abandonment withdrawn or the application revived. See 1124 Off. Gaz. Pat. Office supra.

[6] Therefore, by example, an unintentional delay in the reply might occur if the reply and transmittal form are to be prepared for shipment by the US Postal Service, but other pressing matters distract one's attention and the mail is not timely deposited for shipment.

Allegations as to
Unintentional Delay

The requirements for relief under the provisions of 37 C.F.R. §1.137(b) are: petition, fee, reply, showing of unintentional delay, and–where appropriate–a terminal disclaimer and fee.

It appears that Petitioner has satisfied the requirements of the regulation.

The terminal disclaimer filed on 25 November, 2005, under 37 C.F.R. §1.137(d) was entered and made of record.[7]

CONCLUSION

Because Petitioner appears to have satisfied the regulatory requirements, regulation, the petition under 37 C.F.R. §1.137(b) is **granted**.

The application is released to Publications Branch to be processed into a patent in due course.

Telephone inquiries concerning this decision may be directed to the undersigned at (571) 272-3214.

John J. Gillon, Jr.
Senior Attorney
Office of Petitions

[7] The regulations at 37 C.F.R. §1.137(d)(1) state that a terminal disclaimer filed pursuant to this rule must dedicate to the public a terminal part of the term of any patent granted thereon equivalent to the lesser of: 1) the period of abandonment of the application; or 2) the period extending beyond twenty years from the date on which the application for the patent was filed in the United States, or, if the application contains a specific reference to an earlier filed application(s) under 35 U.S.C. 120, 121 or 365(c), from the date on which the earliest such application was filed. Effective 20 September, 2000 (65 Fed. Reg. 54674, 8 September, 2000).

UNITED STATES PATENT AND TRADEMARK OFFICE

Commissioner for Patents
United States Patent and Trademark Office
P.O. Box 1450
Alexandria, VA 22313-1450
www.uspto.gov

JUN 23 2004

Ted Masters
23344 8th Street
Newhall CA 91321

In re Application of	:	
John Baron Wang	:	
Serial No.: 29/201,952	:	DECISION ON
Filed: March 22, 2004	:	PETITON TO MAKE SPECIAL
For: Motor Driven Vehicle For Transporting:		
A Standing Person	:	

This is in response to applicants' petition filed June 1, 2004, to make the above-identified application special under the provisions of 37 CFR 1.102(d), based on infringement.

Applicant has satisfied the provisions set forth in M.P.E.P. 708.02, II. Therefore the petition is **GRANTED**.

The application will be forwarded to the examiner for action on the merits commensurate with this decision.

Should there be any questions with regard to this letter please contact John Kittle by letter addressed to the Director, Technology Center 3700/2900, P.O. Box 1450 Alexandria, VA 22313-1450 or by telephone at (703) 308-0873 or by facsimile transmission at (703) 308-3139.

John E. Kittle

John E. Kittle
Director
Technology Center 3700/2900

UNITED STATES PATENT AND TRADEMARK OFFICE

Commissioner for Patents
United States Patent and Trademark Office
P.O. Box 1450
Alexandria, VA 22313-1450
www.uspto.gov

DANIEL R. POTE
INGRASSIA FISHER & LORENZ
SUITE 325
7150 E. CAMELBACK ROAD
SCOTTSDALE, AZ 85251

COPY MAILED

FEB 0 6 2006

OFFICE OF PETITIONS

In re Application of	:	
Der Jeou Chou et al	:	
Application No. 29/201,970	:	ON PETITION
Filed: March 24, 2004	:	
Attorney Docket No. 40566.0500	:	

This is a decision on the petition under 37 CFR 1.137(b), filed December 7, 2005, to revive the above-identified application.

The petition is **DISMISSED**.

Any request for reconsideration of this decision must be submitted within TWO (2) MONTHS from the mail date of this decision. Extensions of time under 37 CFR 1.136(a) are permitted. The reconsideration request should include a cover letter entitled "Renewed Petition under 37 CFR 1.137(b)." No additional fee is required with any renewed petition. Petitioner is advised that this is **not** a final agency action decision.

The above-identified application became abandoned for failure to submit the issue fee and formal drawings in a timely manner in reply to the Notice of Allowance and Notice of Allowability mailed June 15, 2005, which set a statutory period for reply of three (3) months. Accordingly, the above-identified application became abandoned on September 16, 2005.

A grantable petition to revive an abandoned application under 37 CFR 1.137(b) must be accompanied by: (1) the required reply (unless previously filed), which may met by the filing of a continuing application in a nonprovisional application abandoned for failure to prosecute, but must be the payment of the issue fee or any outstanding balance thereof in an application or patent, abandoned or lapsed for failure to pay the issue fee or any portion thereof; (2) the petition fee as set forth in 37 CFR 1.17(m); (3) a statement that the entire delay in filing the required reply from the due date for the reply until the filing of a grantable petition pursuant

to 37 CFR 1.137(b) was unintentional; and (4) any terminal disclaimer required pursuant to 37 CFR 1.137(d). This petition lacks item (4) above.

The terminal disclaimer filed December 7, 2005 under 37 CFR 1.137(d) is not acceptable: (1) the percent interest is missing; (2) signed by attorney who is not of record. A blank form for filing a terminal disclaimer is attached.

Further correspondence with respect to this matter should be addressed as follows:

By mail: Mail Stop PETITIONS
Commissioner for Patents
Post Office Box 1450
Alexandria, VA 22313-1450

By hand: Customer Service Window
Randolph Building
401 Dulany Street
Alexandria, VA 22314

By fax: (571) 273-8300
ATTN: Office of Petitions

It is not apparent whether the person signing the statement of unintentional delay was in a position to have firsthand or direct knowledge of the facts and circumstances of the delay at issue. Nevertheless, such statement is being treated as having been made as the result of a reasonable inquiry into the facts and circumstances of such delay. See 37 CFR 10.18(b) and Changes to Patent Practice and Procedure; Final Rule Notice, 62 Fed. Reg. 53131, 53178 (October 10, 1997), 1203 Off. Gaz. Pat. Office 63, 103 (October 21, 1997). In the event that such an inquiry has not been made, petitioner must make such an inquiry. If such inquiry results in the discovery that it is not correct that the entire delay in filing the required reply from the due date for the reply until the filing of a grantable petition pursuant to 37 CFR 1.137(b) was unintentional, petitioner must notify the Office.

There is no indication that the person signing the instant petition was ever given a power of attorney or authorization of agent to prosecute the above-identified application. If the person signing the instant petition desires to receive future correspondence regarding this application, the appropriate power of attorney or authorization of agent must be submitted. While a courtesy copy of this decision

is being mailed to the person signing the instant petition, all future correspondence will be directed to the address of currently of record until such time as appropriate instructions are received to the contrary.

Telephone inquiries concerning this decision should be directed to Wan Laymon at (571) 272-3220.

Wan Laymon
Petitions Examiner
Office of Petitions
Office of the Deputy Commissioner
for Patent Examination Policy

Attachment: PTO/SB/63

cc: SNELL & WILMER
ONE ARIZONA CENTER
400 EAST VAN BUREN
PHOENIX, AZ 85004-2202

UNITED STATES PATENT AND TRADEMARK OFFICE

Commissioner for Patents
United States Patent and Trademark Office
P.O. Box 1450
Alexandria, VA 22313-1450
www.uspto.gov

QUARLES & BRADY LLP
RENAISSANCE ONE
TWO NORTH CENTRAL AVENUE
PHOENIX AZ 85004-2391

COPY MAILED

JUL 11 2006

OFFICE OF PETITIONS

In re Application of	:	
Chou et al.	:	
Application No. 29/201,970	:	ON PETITION
Filed: March 24, 2004	:	
Attorney Docket No. 125182.00008	:	

This is a decision on the renewed petition under 37 C.F.R. § 1.137(b), filed April 3, 2006, to revive the above-identified application.

The petition is **GRANTED.**

This matter is being referred to the Publishing Division for processing into a patent.

Telephone inquiries regarding this decision should be directed to the undersigned at (571) 272-3282.

Liana Chase
Petitions Examiner
Office of Petitions

UNITED STATES DEPARTMENT OF COMMERCE
Patent and Trademark Office
ASSISTANT SECRETARY OF COMMERCE AND
COMMISSIONER OF PATENTS AND TRADEMARKS
Washington, DC 20231

2/13/08

Patent No. :D526717
Inventor(s) :Yamaguchi et al.
Issued :8/15/2006
Title : SPRAYER CARTRIDGE
Atty.doc./File No.

Request for Certificates of Correction

Consideration has been given to your request for the issuance of a Certificate of Correction, for the above – identified patent under the provisions of CFR 1.322.

Inspection of the application for the patent reveals that item [73] is printed in accordance with the record and there need to be a petition letter granted to change this correction and a fee of 230. Therefore being no fault on the Patent and Trademark Office, It has no authority to issue a certificate of correction under the provision of 1.322.

In view of the forgoing, your request in this matter, is hereby denied.

Future written correspondence concerning this matter should be filed and directed to Decisions & Certificates of Correction Branch.

Henry Randall
Cecelia Newman
Decisions & Certificates
of Correction Branch
(703) 308-9390 Ext. 108

THE PROCTER & GAMBLE COMPANY
INTELLECTUAL PROPERTY DIVISION
WINTON HILL BUSINESS CENTER – BOX 412
6250 CENTER HILL AVENUE
CINCINNATI, OH

HR/CBN

UNITED STATES PATENT AND TRADEMARK OFFICE

Commissioner for Patents
United States Patent and Trademark Office
P.O. Box 1450
Alexandria, VA 22313-1450
www.uspto.gov

THE PROCTER & GAMBLE COMPANY
GLOBAL LEGAL DEPARTMENT - IP
SYCAMORE BUILDING - 4TH FLOOR
299 EAST SIXTH STREET
CINCINNATI OH 45202

COPY MAILED

SEP 17 2008

OFFICE OF PETITIONS

In re Patent No. D526717 :
Issued: August 15, 2006 :
Application No. 29/202,006 : ON PETITION
Filed: March 24, 2004 :
Attorney Docket Number: AD134& :

This is a decision on the petition filed March 6, 2008, to correct the assignee's name on the front of the Patent. The petition is treated under 37 CFR 3.81(b)[1].

The petition is **GRANTED**.

Petitioner seeks to correct an error on the face of the patent in which the name of the second assignee was omitted due to petitioner's failure to include the assignee's name on the Fee(s) Transmittal form PTOL-85(b). Petitioner does not indicate that the failure to include the correct assignee name on the Fee(s) Transmittal form PTOL-85(b) was inadvertent, however, it will be so construed. Petitioner must notify the Office if this is **not** a correct interpretation of the statement contained in the petition.

37 CFR 3.81(b), effective June 25, 2004, reads:

> *After payment of the issue fee:* Any request for issuance of an application in the name of the assignee submitted after the date of payment of the issue fee, and any request for a patent to be corrected to state the name of the assignee, must state that the assignment was submitted for recordation as set forth in § 3.11 before issuance of the patent, and must include a request for a certificate of correction under § 1.323 of this chapter (accompanied by the fee set forth in § 1.20(a) and the processing fee set forth in § 1.17(i) of this chapter.

---

[1] *See* Official Gazette of June 22, 2004

The request is accompanied by a certificate of correction (and fee) as required by 3.81(b). Further, Office assignment records reflect that Matsushita Electric Works, Ltd. is also an assignee of record. Accordingly, as the request complies with the provisions of 37 CFR 3.81(b), it would be appropriate for a certificate of correction to issue.

The petition fee in the amount of $130.00 and the certificate of correction fee in the amount of $100.00 have been charged to deposit account no. 16-2480 as authorized.

Inquiries concerning this decision should be directed to the undersigned at (571) 272-3212. Any questions concerning the issuance of a certificate of correction should be directed to the Certificates of Correction Branch at (703) 305-8309.

This matter is being referred to the Certificates of Correction Branch for issuance of a certificate of correction.

Patricia Faison-Ball

Patricia Faison-Ball
Senior Petitions Attorney
Office of Petitions

PET DEC

OIPE JC81
APR 18 2005
PATENT & TRADEMARK OFFICE

IN THE UNITED STATES PATENT AND TRADEMARK OFFICE

IN RE APPLICATION OF:	Reinhard Zetsche	
CASE:	041125DES	REQUEST FOR EXPEDITED EXAMINATION
SER. NO.:	29/202,021	
FILING DATE:	March 24, 2004	(filing date granted)
FOR:	SANITARY FITTING	

Approved 6/29/05
JMStone
Jacqueline M. Stone, Director
Technology Center 1700

COMMISSIONER
FOR PATENTS
P.O. Box 1450
Alexandria, VA 22313-1450

ATTENTION OF:

EXAMINER:

Dear Sir:

If any charges or fees must be paid in connection with the following communication, they may be paid out of our Deposit Account No. 50-0545.

REQUEST FOR EXPEDITED EXAMINATION

In accordance with 37 CFR 1.155, Applicant hereby requests that the above-identified design patent application be granted special status, and advanced out of turn for immediate and expedited examination.

In support of this request, Applicant states that a pre-examination search was conducted in Class 4, Subclasses 675-677 and 507 (Baths, Closets, Sinks and Spittons), Class 137, Subclass 801 (Fluid Handling), and Class D23, Subclasses 238, 245 and

FACTOR & LAKE, LTD.
1327 W. Washington Blvd, Suite 5G/H
Chicago, IL 60607
(312) 226-1818 Telephone
(312) 226-1919 Facsimile

Jody L. Factor	**34157**
Micheal D. Lake	**33727**
William J. Lenz	**44208**
Joseph M. Kinsella Jr.	**45743**
Jacob D. Koering	**51890**
Nick Lee	**54260**

04/19/2005 AMONDAF1 00000005 29202021
01 FC:1802 900.00 OP

UNITED STATES PATENT AND TRADEMARK OFFICE

Commissioner for Patents
United States Patent and Trademark Office
P.O. Box 1450
Alexandria, VA 22313-1450
www.uspto.gov

MAY 27 2004

Bobby Kim
Suite 312
1450 So. Havana Street
Aurora CO 80012

In re Application :
Richard H. Kim et al :
Serial No.: 29/202,024 : DECISION ON PETITION
Filed: March 24, 2004 :
For: Adjustable Container Cutting Die Design:

This is in response to applicants' petition filed March 24, 2004, to make the above-identified application special under the provisions of 37 CFR 1.102(c), based on the age of the applicant.

Applicant has satisfied the provisions set forth in M.P.E.P. 708.02, IV. Therefore the petition is **GRANTED**.

The application will be forwarded to the examiner for action on the merits commensurate with this decision.

Should there be any questions with regard to this letter please contact John Kittle by letter addressed to the Director, Technology Center 3700/2900, P.O. Box 1450 Alexandria, VA 22313-1450, or by telephone at (703) 308-0873 or by facsimile transmission at (703) 308-3139.

John E. Kittle
Director
Technology Center 3700/2900

UNITED STATES PATENT AND TRADEMARK OFFICE

COMMISSIONER FOR PATENTS
UNITED STATES PATENT AND TRADEMARK OFFICE
P.O. BOX 1450
ALEXANDRIA, VA 22313-1450
www.uspto.gov

HOVEY WILLIAMS LLP
SUITE 400
2405 GRAND BOULEVARD
KANSAS CITY, MO 64108

5/6/05

In re Application of
Daniel R. Oakley
Serial No.: 29/202,093
Filed: March 25, 2004
Attorney Docket No.: 34586

: PETITION DECISION

This is a decision on applicant's petition to revive patent application under 37 CFR 1.137(b), received February 15, 2005, to revive an unintentionally abandoned application.

This application became abandoned for failure to fully respond to the Notice of Allowance mailed August 24, 2004, which set a three-month statutory period to submit the Issue Fee and formal drawings. The Issue fee was submitted November 16, 2004; however, as no formal drawings were received by November 24, 2004, a Notice of Abandonment was mailed January 20, 2005. Applicant then filed this petition.

A grantable petition for a design application under 37 CFR 1.137(b), as revised December 1, 1997, requires four items: (1) a petition and petition fee; (2) a complete response if not earlier made; (3) a statement that the entire period of delay in prosecution was unintentional; and (4) a terminal disclaimer and disclaimer fee. The requirement for a terminal disclaimer has been waived, as the petition was filed within one month of the mailing of the Notice of Abandonment.

Applicant's petition is **GRANTED**.

The Terminal Disclaimer fee of $65.00 will be refunded to applicant's Deposit Account 19-0522, as directed.

The application will be forwarded to Publication Division for printing as a patent in due course.

Should there be any questions with respect to this decision, please contact Sandra Morris; by mail addressed to: Director, Technology Center 1700/2900, P.O. Box 1450, Alexandria, VA 22313-1450; or by telephone at (571) 272-2622.

JMStone

Jacqueline Stone
Director, Technology Center 1700/2900

UNITED STATES PATENT AND TRADEMARK OFFICE

COMMISSIONER FOR PATENTS
UNITED STATES PATENT AND TRADEMARK OFFICE
P.O. BOX 1450
ALEXANDRIA, VA 22313-1450
www.uspto.gov

APR 01 2004

JEFFER, MANGELS, BUTLER & MARMARO, LLP
1900 AVENUE OF THE STARS, 7TH FLOOR
LOS ANGELES CA 90067

In re Application of	:	
Fiona Adams et al	:	
Serial No.: 29/202,129	:	**REQUEST FOR EXPEDITED EXAMINATION**
Filed: March 26, 2004	:	
For: Footwear Outsole	:	

This is in response to the Request for expedited examination applicant filed March 26, 2004, to expedite the above-identified application under the provisions of 37 CFR 1.155.

Applicant has satisfied the provisions set forth in 37 CFR 1.155, thus the petition is **GRANTED**.

The application will be forwarded to the examiner for action on the merits commensurate with this decision.

Should there be any questions with regard to this letter please contact John Kittle by letter addressed to the Director, Technology Center 3700/2900, and P.O. BOX 1450 ALEXANDRIA, VA 22313-1450 or by telephone at (703) 308-0873 or by facsimile transmission at (703) 308-3139.

John E. Kittle
Director
Technology Center 3700/2900

UNITED STATES PATENT AND TRADEMARK OFFICE

UNITED STATES DEPARTMENT OF COMMERCE
United States Patent and Trademark Office
Address: COMMISSIONER FOR PATENTS
P.O. Box 1450
Alexandria, Virginia 22313-1450
www.uspto.gov

APPL NO.	FILING OR 371 (c) DATE	ART UNIT	FIL FEE REC'D	ATTY.DOCKET NO	DRAWINGS	TOT CLMS	IND CLMS
29/202,129	03/25/2004	2914	170	63584-5093	8	1	1

CONFIRMATION NO. 5209

CORRECTED FILING RECEIPT

OC000000012517106

24574
JEFFER, MANGELS, BUTLER & MARMARO, LLP
1900 AVENUE OF THE STARS, 7TH FLOOR
LOS ANGELES, CA 90067

Date Mailed: 05/04/2004

Receipt is acknowledged of this regular Patent Application. It will be considered in its order and you will be notified as to the results of the examination. Be sure to provide the U.S. APPLICATION NUMBER, FILING DATE, NAME OF APPLICANT, and TITLE OF INVENTION when inquiring about this application. Fees transmitted by check or draft are subject to collection. Please verify the accuracy of the data presented on this receipt. **If an error is noted on this Filing Receipt, please write to the Office of Initial Patent Examination's Filing Receipt Corrections, facsimile number 703-746-9195. Please provide a copy of this Filing Receipt with the changes noted thereon. If you received a "Notice to File Missing Parts" for this application, please submit any corrections to this Filing Receipt with your reply to the Notice. When the USPTO processes the reply to the Notice, the USPTO will generate another Filing Receipt incorporating the requested corrections (if appropriate).**

Applicant(s)

Fiona Adams, Santa Barbara, CA;
Christjane Burg, Santa Barbara, CA;

Domestic Priority data as claimed by applicant

Foreign Applications

If Required, Foreign Filing License Granted: 03/30/2004

Projected Publication Date: None, application is not eligible for pre-grant publication

Non-Publication Request: No

Early Publication Request: No

**** SMALL ENTITY ****

Title

FOOTWARE OUTSOLE

Preliminary Class

D02

LICENSE FOR FOREIGN FILING UNDER
Title 35, United States Code, Section 184
Title 37, Code of Federal Regulations, 5.11 & 5.15

GRANTED

The applicant has been granted a license under 35 U.S.C. 184, if the phrase "IF REQUIRED, FOREIGN FILING LICENSE GRANTED" followed by a date appears on this form. Such licenses are issued in all applications where the conditions for issuance of a license have been met, regardless of whether or not a license may be required as set forth in 37 CFR 5.15. The scope and limitations of this license are set forth in 37 CFR 5.15(a) unless an earlier license has been issued under 37 CFR 5.15(b). The license is subject to revocation upon written notification. The date indicated is the effective date of the license, unless an earlier license of similar scope has been granted under 37 CFR 5.13 or 5.14.

This license is to be retained by the licensee and may be used at any time on or after the effective date thereof unless it is revoked. This license is automatically transferred to any related applications(s) filed under 37 CFR 1.53(d). This license is not retroactive.

The grant of a license does not in any way lessen the responsibility of a licensee for the security of the subject matter as imposed by any Government contract or the provisions of existing laws relating to espionage and the national security or the export of technical data. Licensees should apprise themselves of current regulations especially with respect to certain countries, of other agencies, particularly the Office of Defense Trade Controls, Department of State (with respect to Arms, Munitions and Implements of War (22 CFR 121-128)); the Office of Export Administration, Department of Commerce (15 CFR 370.10 (j)); the Office of Foreign Assets Control, Department of Treasury (31 CFR Parts 500+) and the Department of Energy.

NOT GRANTED

No license under 35 U.S.C. 184 has been granted at this time, if the phrase "IF REQUIRED, FOREIGN FILING LICENSE GRANTED" DOES NOT appear on this form. Applicant may still petition for a license under 37 CFR 5.12, if a license is desired before the expiration of 6 months from the filing date of the application. If 6 months has lapsed from the filing date of this application and the licensee has not received any indication of a secrecy order under 35 U.S.C. 181, the licensee may foreign file the application pursuant to 37 CFR 5.15(b).

UNITED STATES PATENT AND TRADEMARK OFFICE

Commissioner for Patents
United States Patent and Trademark Office
P.O. Box 1450
Alexandria, VA 22313-1450
www.uspto.gov

JOSEPH T. REGARD, LTD PLC
PO DRAWER 429
MADISONVILLE LA 70447-0429

COPY MAILED

NOV 01 2007

OFFICE OF PETITIONS

ON PETITION

In re Application of	:
Masoorifar, Eshrat	:
Application No. 29/202,133	:
Filed: March 26, 2004	:
Attorney Docket No. MASO401D	:

This is a decision on the petition under 37 C.F.R. § 1.137(b), filed September 14, 2007, to revive the above-identified application.

The petition is **GRANTED.**

The petition satisfies the conditions for revival pursuant to the provisions of 37 CFR 1.137(b) in that (1) the reply in the form of the Issue Fee Transmittal with payment of the issue fee; (2) the petition fee; (3) the required statement of unintentional delay; and (4) the terminal disclaimer and fee have been received. Accordingly, the response has been accepted as having been unintentionally delayed.

This matter is being referred to the Publishing Division for processing into a patent.

Telephone inquiries regarding this decision should be directed to the undersigned at (571) 272-3206.

Liana Walsh
Petitions Examiner
Office of Petitions

UNITED STATES PATENT AND TRADEMARK OFFICE

Commissioner for Patents
United States Patent and Trademark Office
P.O. Box 1450
Alexandria, VA 22313-1450
www.uspto.gov

COPY MAILED

FEB 15 2007

OFFICE OF PETITIONS

GOLDSTEIN LAW OFFICES, P.C.
2071 CLOVE ROAD - 204
STATEN ISLAND NY 10304

In re Patent No. D513,327
Issue Date: December 27, 2005
Application No. 29/202,143
Filed: March 26, 2004
Attorney Docket No. 16059

ON PETITION

This is a decision on the petition under 37 CFR 1.182, filed October 16, 2006, requesting issuance of duplicate Letters Patent for the above-identified application.

The petition is granted.

The Publishing Division is directed to issue duplicate Letters Patent.

Any questions concerning this matter may be directed to the undersigned at (571) 272-3208. Any questions concerning issuance of the duplicate Letters Patent should be directed to Krystal Paige at (703) 308-9250 x 139.

A copy of this decision is being forwarded to Publishing Division for issuance of a duplicate Letters Patent.

Karen Creasy

Karen Creasy
Petitions Examiner
Office of Petitions

cc: Krystal Paige, South Tower, 8C32 (Fax 571-273-9756)

UNITED STATES PATENT AND TRADEMARK OFFICE

Commissioner for Patents
United States Patent and Trademark Office
P.O. Box 1450
Alexandria, VA 22313-1450
www.uspto.gov

JUN 2 1 2004

TRASK BRITT
P.O. BOX 2550
SALT LAKE CITY UT 84110

In re Application of	:	
John Hlavacs	:	
Serial No.: 29/202,156	:	DECISION ON PETITION
Filed: March 26, 2004	:	
For: Side Element Of A Shoe Upper	:	

This is in response to the petition applicant filed on March 26, 2004 to make the above-identified application special under the provisions of 37 CFR 1.102(d).

Applicant has satisfied the provisions set forth in M.P.E.P. 708.02, VIII, thus the petition is **GRANTED**.

The application will be forwarded to the examiner for action on the merits commensurate with this decision.

Should there be any questions with regard to this letter please contact John Kittle by letter addressed to the Director, Technology Center 3700/2900, P.O. Box 1450 Alexandria, VA 22313-1450, or by telephone at (703) 308-0873 or by facsimile transmission at (703) 308-3139.

John E. Kittle
Director
Technology Center 3700/2900

UNITED STATES PATENT AND TRADEMARK OFFICE

Commissioner for Patents
United States Patent and Trademark Office
P.O. Box 1450
Alexandria, VA 22313-1450
www.uspto.gov

COPY MAILED
JUN 0 5 2006
OFFICE OF PETITIONS

JOHN S. EGBERT
HARRISON & EBGERT
412 MAIN STREET, 7TH FLOOR
HOUSTON, TX 77002

In re Application of	:
Mehmet Emre Kutukcuoglu	: DECISION ON PETITION
Application No. 29/202,160	: UNDER 37 CFR 1.137(b)
Filed: March 29, 2004	:
Attorney Docket No. 1285-131	:

This is a decision on the petition under 37 CFR 1.137(b), filed March 29, 2006, to revive the above-identified application.

The petition is **dismissed**.

Any request for reconsideration of this decision must be submitted within TWO (2) MONTHS from the mail date of this decision. Extensions of time under 37 CFR 1.136(a) are permitted. The reconsideration request should include a cover letter entitled "Renewed Petition under 37 CFR 1.137(b)." This is **not** a final agency action within the meaning of 5 U.S.C. § 704.

This application became abandoned for failure to timely pay the issue and publication fees on or before November 10, 2005 as required by the Notice of Allowance and Fee(s) Due, mailed August 10, 2005. A Notice of Abandonment was mailed on January 25, 2006.

A grantable petition under 37 CFR 1.137(b) must be accompanied by: (1) the required reply, unless previously filed; (2) the petition fee as set forth in 37 CFR 1.17(m); (3) a statement that the entire delay in filing the required reply from the due date for the reply until the filing of a grantable petition pursuant to 37 CFR 1.137(b) was unintentional; and (4) any terminal disclaimer (and fee as set forth in 37 CFR 1.20(d)) required by 37 CFR 1.137(d). Where there is a question as to whether either the abandonment or the delay in filing a petition under 37 CFR 1.137 was unintentional, the Director may require additional information. See MPEP 711.03(c)(III)(C) and (D). The instant petition lacks item (4).

The rule at 37 CFR 1.137(d) requires the submission of a terminal disclaimer as a condition for reviving an abandoned design application. Accordingly, a proper terminal disclaimer and fee are required before the petition to revive can be granted.

Further correspondence with respect to this matter should be addressed as follows:

By mail: Mail Stop PETITIONS
Commissioner for Patents
Post Office Box 1450
Alexandria, VA 22313-1450

By hand: Customer Service Window
Mail Stop Petitions
Randolph Building
401 Dulany Street
Alexandria, VA 22314

By fax: (571) 273-8300
ATTN: Office of Petitions

Any questions concerning this matter may be directed to the undersigned at (571) 272-3218.

Frances Hicks
Petitions Examiner
Office of Petitions

UNITED STATES PATENT AND TRADEMARK OFFICE

Commissioner for Patents
United States Patent and Trademark Office
P.O. Box 1450
Alexandria, VA 22313-1450
www.uspto.gov

JOHN S. EGBERT
HARRISON & EBGERT
412 MAIN STREET, 7TH FLOOR
HOUSTON, TX 77002

COPY MAILED

JUL 19 2006

OFFICE OF PETITIONS

In re Application of	:
Mehmet Emre Kutukcuoglu	: DECISION ON PETITION
Application No. 29/202,160	: UNDER 37 CFR 1.137(b)
Filed: March 29, 2004	:
Attorney Docket No. 1285-131	:

This is a decision on the renewed petition under 37 CFR 1.137(b), filed June 19, 2006, to revive the above-identified application.

The petition is **GRANTED**.

This application became abandoned for failure to timely pay the issue and publication fees on or before November 10, 2005 as required by the Notice of Allowance and Fee(s) Due, mailed August 10, 2005. A Notice of Abandonment was mailed on January 25, 2006.

The petition satisfies the conditions for revival pursuant to the provisions of 37 CFR 1.137(b) in that (1) the reply in the form of payment of the $400 issue fee, (2) the $750 petition fee, (3) the required statement of unintentional delay, and (4) a terminal disclaimer in accordance with 37 CFR 1.137(d) have been received. Accordingly, the issue fee is accepted as having been unintentionally delayed.

The terminal disclaimer filed on June 19, 2006 has been accepted and made of record in this application file.

Telephone inquiries concerning this decision should be directed to the undersigned at (571) 272-3218.

The application file is being referred to Publishing Division.

Frances Hicks
Petitions Examiner
Office of Petitions

UNITED STATES PATENT AND TRADEMARK OFFICE

Commissioner for Patents
United States Patent and Trademark Office
P.O. Box 1450
Alexandria, VA 22313-1450
www.uspto.gov

AUG 04 2004

TRASK BRITT
P.O. BOX 2550
SALT LAKE CITY UT 84110

In re Application of	:	
Leonard Wozniak	:	
Serial No.: 29/202,166	:	DECISION ON PETITION
Filed: March 26, 2004	:	
For: Side Element of a Shoe Upper	:	

This is in response to the petition applicant filed on March 26, 2004, to make the above-identified application special under the provisions of 37 CFR 1.102(d).

Applicant has satisfied the provisions set forth in M.P.E.P. 708.02, VIII, thus the petition is **GRANTED**.

The application will be forwarded to the examiner for action on the merits commensurate with this decision.

Should there be any questions with regard to this letter please contact John Kittle by letter addressed to the Director, Technology Center 3700/2900, P.O. Box 1450 Alexandria, VA 22313-1450, or by telephone at (703) 308-0873 or by facsimile transmission at (703) 308-3139.

John E. Kittle

John E. Kittle
Director
Technology Center 3700/2900

UNITED STATES PATENT AND TRADEMARK OFFICE

Commissioner for Patents
United States Patent and Trademark Office
P.O. Box 1450
Alexandria, VA 22313-1450
www.uspto.gov

JUL 14 2004

BANNER & WITCOFF
1001 G STREET N W
SUITE 1100
WASHINGTON DC 20001

In re Application of	:	
Julio Ceasar Panariello, Jr.	:	
Serial No.: 29/202,222	:	DECISION ON PETITION
Filed: March 29, 2004	:	
For: Portion Of A Shoe Upper	:	

This is in response to the petition applicant filed on June 10, 2004 to make the above-identified application special under the provisions of 37 CFR 1.102(d).

Applicant has satisfied the provisions set forth in M.P.E.P. 708.02, VIII, thus the petition is **GRANTED**.

The application will be forwarded to the examiner for action on the merits commensurate with this decision.

Should there be any questions with regard to this letter please contact John Kittle by letter addressed to the Director, Technology Center 3700/2900, P.O. Box 1450 Alexandria, VA 22313-1450, or by telephone at (703) 308-0873 or by facsimile transmission at (703) 308-3139.

John E. Kittle

John E. Kittle
Director
Technology Center 3700/2900

UNITED STATES PATENT AND TRADEMARK OFFICE

Commissioner for Patents
United States Patent and Trademark Office
P.O. Box 1450
Alexandria, VA 22313-1450
www.uspto.gov

JUL 14 2004

BANNER & WITCOFF
1001 G STREET N W
SUITE 1100
WASHINGTON DC 20001

In re Application of	:	
Julio Ceasar Panariello, Jr.	:	
Serial No.: 29/202,223	:	DECISION ON PETITION
Filed: March 29, 2004	:	
For: Portion Of A Shoe Upper	:	

This is in response to the petition applicant filed on June 10, 2004 to make the above-identified application special under the provisions of 37 CFR 1.102(d).

Applicant has satisfied the provisions set forth in M.P.E.P. 708.02, VIII, thus the petition is **GRANTED**.

The application will be forwarded to the examiner for action on the merits commensurate with this decision.

Should there be any questions with regard to this letter please contact John Kittle by letter addressed to the Director, Technology Center 3700/2900, P.O. Box 1450 Alexandria, VA 22313-1450, or by telephone at (703) 308-0873 or by facsimile transmission at (703) 308-3139.

John E. Kittle
Director
Technology Center 3700/2900

UNITED STATES PATENT AND TRADEMARK OFFICE

Commissioner for Patents
United States Patent and Trademark Office
P.O. Box 1450
Alexandria, VA 22313-1450
www.uspto.gov

JUL 14 2004

BANNER & WITCOFF
1001 G STREET N W
SUITE 1100
WASHINGTON DC 20001

In re Application of	:	
William Young	:	
Serial No.: 29/202,224	:	DECISION ON PETITION
Filed: March 29, 2004	:	
For: Portion Of A Shoe Upper	:	

This is in response to the petition applicant filed on June 10, 2004 to make the above-identified application special under the provisions of 37 CFR 1.102(d).

Applicant has satisfied the provisions set forth in M.P.E.P. 708.02, VIII, thus the petition is **GRANTED**.

The application will be forwarded to the examiner for action on the merits commensurate with this decision.

Should there be any questions with regard to this letter please contact John Kittle by letter addressed to the Director, Technology Center 3700/2900, P.O. Box 1450 Alexandria, VA 22313-1450, or by telephone at (703) 308-0873 or by facsimile transmission at (703) 308-3139.

John E. Kittle

John E. Kittle
Director
Technology Center 3700/2900

UNITED STATES PATENT AND TRADEMARK OFFICE

Commissioner for Patents
United States Patent and Trademark Office
P.O. Box 1450
Alexandria, VA 22313-1450
www.uspto.gov

MINTZ, LEVIN, COHN, FERRIS,
GLOVSKY AND POPEO, P.C.
ONE FINANCIAL CENTER
BOSTON, MA 02111

COPY MAILED

MAR 2 6 2007

OFFICE OF PETITIONS

In re Application of :
Samuel Messinger :
Application No. 29/202,259 : ON PETITION
Filed: March 29, 2004 :
Attorney Docket No. 29474-004DIV :

This is a decision on the petition under 37 CFR 1.137(b), filed January 12, 2007, to revive the above-identified design application.

The petition is **GRANTED**.

This application became abandoned for failure to timely pay the $400 issue fee due on or before April 10, 2006, as required by the Notice of Allowance and Fee(s) Due, mailed January 9, 2006. The date of abandonment of this application is April 11, 2006. A Notice of Abandonment was mailed on June 7, 2006.

The petition satisfies the requirements of 37 CFR 1.137(b) in that petitioner has supplied (1) payment of the $400 issue fee,[1] (2) the petition fee of $750, (3) a proper statement of unintentional delay, and (4) a terminal disclaimer and fee as required by 37 CFR 1.137(d). Accordingly, the issue fee is accepted as being unintentionally delayed.

The terminal disclaimer is accepted and has been made of record.

There is no indication that petitioner has submitted a Part B-Fee(s) Transmittal form (PTOL-85). Accordingly, if petitioner desires to have the information normally found thereon printed on the patent, the attached blank Fee(s) Transmittal form should be completed and returned to the Publishing Division within **ONE MONTH** from the mail date of this decision.

---

[1] The petition is accompanied by an issue fee payment of $700, whereas, the correct fee for a design application qualifying for small entity status is $400. Accordingly, as authorized, the $300 overpayment will be credited to petitioner's deposit account in due course.

It is not apparent whether the person signing the statement of unintentional delay was in a position to have firsthand or direct knowledge of the facts and circumstances of the delay at issue. Nevertheless, such statement is being treated as having been made as the result of a reasonable inquiry into the facts and circumstances of such delay. See 37 CFR 10.18(b) and Changes to Patent Practice and Procedure; Final Rule Notice, 62 Fed. Reg. 53131, 53178 (October 10, 1997), 1203 Off. Gaz. Pat. Office 63, 103 (October 21, 1997). In the event that such an inquiry has not been made, petitioner must make such an inquiry. If such inquiry results in the discovery that it is not correct that the entire delay in filing the required reply from the due date for the reply until the filing of a grantable petition pursuant to 37 CFR 1.137(b) was unintentional, petitioner must notify the Office.

Telephone inquiries concerning this decision should be directed to the undersigned at (571) 272-3218.

This application is being referred to Publishing Division for appropriate processing in accordance with this decision on petition.

Frances Hicks
Petitions Examiner
Office of Petitions

ATTACHMENT: Blank Part B - Fee(s) Transmittal Form

PART B - FEE(S) TRANSMITTAL

Complete and send this form, together with applicable fee(s), to: Mail **Mail Stop ISSUE FEE**
Commissioner for Patents
P.O. Box 1450
Alexandria, Virginia 22313-1450

or Fax **(571) 273-2885**

INSTRUCTIONS: This form should be used for transmitting the ISSUE FEE and PUBLICATION FEE (if required). Blocks 1 through 5 should be completed where appropriate. All further correspondence including the Patent, advance orders and notification of maintenance fees will be mailed to the current correspondence address as indicated unless corrected below or directed otherwise in Block 1, by (a) specifying a new correspondence address; and/or (b) indicating a separate "FEE ADDRESS" for maintenance fee notifications.

CURRENT CORRESPONDENCE ADDRESS (Note: Use Block 1 for any change of address)

7590 01/09/2006

STEPHAN A. PENDORF
PENDORF & CUTLIFF
5111 MEMORIAL HIGHWAY
TAMPA, FL 33634-7356

Note: A certificate of mailing can only be used for domestic mailings of the Fee(s) Transmittal. This certificate cannot be used for any other accompanying papers. Each additional paper, such as an assignment or formal drawing, must have its own certificate of mailing or transmission.

Certificate of Mailing or Transmission

I hereby certify that this Fee(s) Transmittal is being deposited with the United States Postal Service with sufficient postage for first class mail in an envelope addressed to the Mail Stop ISSUE FEE address above, or being facsimile transmitted to the USPTO (571) 273-2885, on the date indicated below.

(Depositor's name)

(Signature)

(Date)

APPLICATION NO.	FILING DATE	FIRST NAMED INVENTOR	ATTORNEY DOCKET NO.	CONFIRMATION NO.
29/202,259	03/29/2004	Samuel Messinger	3999.005	2411

TITLE OF INVENTION: INSERT FOR TOOTHBRUSH HOLDER

APPLN. TYPE	SMALL ENTITY	ISSUE FEE	PUBLICATION FEE	TOTAL FEE(S) DUE	DATE DUE
nonprovisional	YES	$400	$0	$400	04/10/2006

EXAMINER	ART UNIT	CLASS-SUBCLASS
VINSON, BRIAN N	2911	D06-534000

1. Change of correspondence address or indication of "Fee Address" (37 CFR 1.363).

☐ Change of correspondence address (or Change of Correspondence Address form PTO/SB/122) attached.

☐ "Fee Address" indication (or "Fee Address" Indication form PTO/SB/47; Rev 03-02 or more recent) attached. Use of a Customer Number is required.

2. For printing on the patent front page, list

(1) the names of up to 3 registered patent attorneys or agents OR, alternatively,

(2) the name of a single firm (having as a member a registered attorney or agent) and the names of up to 2 registered patent attorneys or agents. If no name is listed, no name will be printed.

1 _____

2 _____

3 _____

3. ASSIGNEE NAME AND RESIDENCE DATA TO BE PRINTED ON THE PATENT (print or type)

PLEASE NOTE: Unless an assignee is identified below, no assignee data will appear on the patent. If an assignee is identified below, the document has been filed for recordation as set forth in 37 CFR 3.11. Completion of this form is NOT a substitute for filing an assignment.

(A) NAME OF ASSIGNEE

(B) RESIDENCE: (CITY and STATE OR COUNTRY)

Please check the appropriate assignee category or categories (will not be printed on the patent): ☐ Individual ☐ Corporation or other private group entity ☐ Government

4a. The following fee(s) are enclosed:

☐ Issue Fee

☐ Publication Fee (No small entity discount permitted)

☐ Advance Order - # of Copies _____

4b. Payment of Fee(s):

☐ A check in the amount of the fee(s) is enclosed.

☐ Payment by credit card. Form PTO-2038 is attached.

☐ The Director is hereby authorized by charge the required fee(s), or credit any overpayment, to Deposit Account Number _____ (enclose an extra copy of this form).

5. Change in Entity Status (from status indicated above)

☐ a. Applicant claims SMALL ENTITY status. See 37 CFR 1.27.

☐ b. Applicant is no longer claiming SMALL ENTITY status. See 37 CFR 1.27(g)(2).

The Director of the USPTO is requested to apply the Issue Fee and Publication Fee (if any) or to re-apply any previously paid issue fee to the application identified above.
NOTE: The Issue Fee and Publication Fee (if required) will not be accepted from anyone other than the applicant; a registered attorney or agent; or the assignee or other party in interest as shown by the records of the United States Patent and Trademark Office.

Authorized Signature _____ Date _____

Typed or printed name _____ Registration No. _____

This collection of information is required by 37 CFR 1.311. The information is required to obtain or retain a benefit by the public which is to file (and by the USPTO to process) an application. Confidentiality is governed by 35 U.S.C. 122 and 37 CFR 1.14. This collection is estimated to take 12 minutes to complete, including gathering, preparing, and submitting the completed application form to the USPTO. Time will vary depending upon the individual case. Any comments on the amount of time you require to complete this form and/or suggestions for reducing this burden, should be sent to the Chief Information Officer, U.S. Patent and Trademark Office, U.S. Department of Commerce, P.O. Box 1450, Alexandria, Virginia 22313-1450. DO NOT SEND FEES OR COMPLETED FORMS TO THIS ADDRESS. SEND TO: Commissioner for Patents, P.O. Box 1450, Alexandria, Virginia 22313-1450.

Under the Paperwork Reduction Act of 1995, no persons are required to respond to a collection of information unless it displays a valid OMB control number.

UNITED STATES PATENT AND TRADEMARK OFFICE

COMMISSIONER FOR PATENTS
UNITED STATES PATENT AND TRADEMARK OFFICE
P.O. BOX 1450
ALEXANDRIA, VA 22313-1450
www.uspto.gov

5/6/05

THE PROCTER & GAMBLE COMPANY
INTELLECTUAL PROPERTY DIVISION
WINTON HILL TECHNICAL CENTER – BOX 161
6110 CENTER HILL AVENUE
CINCINNATI, OH 45224

In re Application of	
Naomi Ruth Nelson	:
Serial No.: 29/202,303	:
Filed: March 29, 2004	: PETITION DECISION
Attorney Docket No.: D-836C	:
	:

This is a decision on applicant's petition to revive patent application under 37 CFR 1.137(b), received March 1, 2005, to revive an unintentionally abandoned application.

This application became abandoned for failure to respond to the Notice of Allowance mailed November 30, 2004, which set a three-month statutory period to submit the Issue Fee. As no response was received by February 28, 2005, the application was abandoned. Applicant then filed this petition.

A grantable petition for a design application under 37 CFR 1.137(b), as revised December 1, 1997, requires four items: (1) a petition and petition fee; (2) a complete response if not earlier made; (3) a statement that the entire period of delay in prosecution was unintentional; and (4) a terminal disclaimer and disclaimer fee. The requirement for a terminal disclaimer has been waived, as the petition was filed before the mailing of the Notice of Abandonment.

Applicant's petition is **GRANTED**.

The application will be forwarded to Publication Division for printing as a patent in due course.

Should there be any questions with respect to this decision, please contact Sandra Morris; by mail addressed to: Director, Technology Center 1700/2900, P.O. Box 1450, Alexandria, VA 22313-1450; or by telephone at (571) 272-2622.

Jstone

Jacqueline Stone
Director, Technology Center 1700/2900

UNITED STATES PATENT AND TRADEMARK OFFICE

Commissioner for Patents
United States Patent and Trademark Office
P.O. Box 1450
Alexandria, VA 22313-1450
www.uspto.gov

BUCHANAN, INGERSOLL
& ROONEY PC
POST OFFICE BOX 1404
ALEXANDRIA VA 22313-1404

COPY MAILED

SEP 29 2009

OFFICE OF PETITIONS

In re Patent No. D592222 :
Issue Date: 12 May, 2009 :
Application No. 29/202,314 : ON PETITION
Filed: 30 March, 2004 :
Attorney Docket No. 003580-948 :

This is a decision on the petition filed on 23 June, 2009, under 37 C.F.R. §3.81(b) to correct, *inter alia*, the name of the assignee on the front page of the above-identified patent by way of a certificate of correction under 37 C.F.R. §1.323.

The request is **GRANTED**— upon the instant showing of the recordation of the assignment on 24 April, 2007, and the location of recordation as Reel/Frame 019235/0583.

Petitioner requests issuance of a certificate of correction the identification of the Assignee(s) to "**APPLE INC. (Cupertino, CA, USA)**" of the substance and in the form of that submitted therewith.

The Certificates of Correction Branch will be notified of this decision granting the petition under 37 C.F.R. §3.81(b) and directing issuance of the requested Certificate of Correction.

Inquiries regarding the issuance of a certificate of correction should be directed to the Certificate of Correction Branch at (571) 272-4200.

Patent No. D592222
Application No. 29/202,314

Telephone inquiries regarding this decision may be directed to the undersigned at (571) 272-3214—it is noted, however, that all practice before the Office is in writing (see: 37 C.F.R. §1.2[1]) regulations (37 C.F.R.) and the commentary on policy (MPEP). Therefore, no telephone discussion may be controlling or considered authority for Petitioner's action(s).

/John J. Gillon, Jr./
John J. Gillon, Jr.
Senior Attorney
Office of Petitions

---

[1] The regulations at 37 C.F.R. §1.2 provide:

§1.2 Business to be transacted in writing.

All business with the Patent and Trademark Office should be transacted in writing.The personal attendance of applicants or their attorneys or agents at the Patent and Trademark Office is unnecessary. The action of the Patent and Trademark Office will be based exclusively on the written record in the Office. No attention will be paid to any alleged oral promise, stipulation,or understanding in relation to which there is disagreement or doubt.

UNITED STATES PATENT AND TRADEMARK OFFICE

Commissioner for Patents
United States Patent and Trademark Office
P.O. Box 1450
Alexandria, VA 22313-1450
www.uspto.gov

JUL 14 2004

BANNER & WITCOFF
1001 G STREET N.W
SUITE 1100
WASHINGTON DC 20001

In re Application of	:	
Kenneth Link	:	
Serial No.: 29/202,331	:	DECISION ON PETITION
Filed: March 30, 2004	:	
For: Portion Of A Shoe Upper	:	

This is in response to the petition applicant filed on April 12, 2004 to make the above-identified application special under the provisions of 37 CFR 1.102(d).

Applicant has satisfied the provisions set forth in M.P.E.P. 708.02, VIII, thus the petition is **GRANTED**.

The application will be forwarded to the examiner for action on the merits commensurate with this decision.

Should there be any questions with regard to this letter please contact John Kittle by letter addressed to the Director, Technology Center 3700/2900, P.O. Box 1450 Alexandria, VA 22313-1450, or by telephone at (703) 308-0873 or by facsimile transmission at (703) 308-3139.

John E. Kittle

John E. Kittle
Director
Technology Center 3700/2900

UNITED STATES PATENT AND TRADEMARK OFFICE

Commissioner for Patents
United States Patent and Trademark Office
P.O. Box 1450
Alexandria, VA 22313-1450
www.uspto.gov

Seth M. Wilson
Bulkley, Richardson and Gelinas, LLP
Suite 2700, 1500 Main Street
Springfield MA 01115-5507

COPY MAILED

JUN 08 2007

OFFICE OF PETITIONS

In re Application of
FOLSOM et al.
Application No. 29/202,341
Filed: 03/30/2004
Attorney Docket No. 26841-1

DECISION ON PETITION

This is a decision on the petition under 37 CFR 1.181, filed December 15, 2006, to withdraw the holding of abandonment for the above-identified application.

This application was held abandoned for failure to pay the issue fee within the three-month statutory period for reply set forth in the Notice of Allowance and Fee(s) Due mailed on April 12, 2006. In the apparent absence of a timely filed response, the application was held abandoned and a Notice of Abandonment was mailed on December 7, 2006.

Petitioners asserted that they filed the Part B - Fee(s) Transmittal and "Fee Address" Indication Form on June 26, 2007, but that the documents were inadvertently directed to the wrong facsimile number. Petitioners requested that the Office withdraw the Notice of Abandonment pursuant to 37 CFR 1.181 and 1.8(b) and consider the Part B - Fee(s) Transmittal and "Fee Address" Indication Form as received in the USPTO on June 26, 2006.

Upon a review of the record, the Office has located the Part B - Fee(s) Transmittal, authorizing the USPTO to charge the Deposit Account in the amount of $400.00 for the issue fee. It appears that the Part B - Fee(s) Transmittal was received in the USPTO on June 26, 2006, as evidenced by Central Fax Center date-stamp. Accordingly, the issue fee was timely paid in response to the Notice of Allowance. The petition is **granted**.

The Notice of Abandonment is hereby withdrawn. The application is restored to pending status in view of the fact that a response was timely filed and received on June 26, 2006.

The matter is being referred to the Office of Patent Publications for processing as a patent.

Telephone inquiries concerning this matter may be directed to the undersigned at (571) 272-3211.

C. T. Donnell

Christina Tartera Donnell
Senior Petitions Attorney
Office of Petitions

UNITED STATES PATENT AND TRADEMARK OFFICE

Commissioner for Patents
United States Patent and Trademark Office
P.O. Box 1450
Alexandria, VA 22313-1450
www.uspto.gov

Seth M. Wilson
Bulkley, Richardson and Gelinas, LLP
Suite 2700, 1500 Main Street
Springfield MA 01115-5507

COPY MAILED

JUN 14 2007

OFFICE OF PETITIONS

In re Application of	:	
FOLSOM et al.	:	
Application No. 29/202,341	:	DECISION ON PETITION
Filed: 03/30/2004	:	
Attorney Docket No. 26841-1	:	

This is a decision on the petition under 37 CFR 1.181, filed December 15, 2006, to withdraw the holding of abandonment for the above-identified application.

This application was held abandoned for failure to pay the issue fee within the three-month statutory period for reply set forth in the Notice of Allowance and Fee(s) Due mailed on April 12, 2006. In the apparent absence of a timely filed response, the application was held abandoned and a Notice of Abandonment was mailed on December 7, 2006.

Petitioners asserted that they filed the Part B - Fee(s) Transmittal and "Fee Address" Indication Form on June 26, 2007, but that the documents were inadvertently directed to the wrong facsimile number. Petitioners requested that the Office withdraw the Notice of Abandonment pursuant to 37 CFR 1.181 and 1.8(b) and consider the Part B - Fee(s) Transmittal and "Fee Address" Indication Form as received in the USPTO on June 26, 2006.

Upon a review of the record, the Office has located the Part B - Fee(s) Transmittal, authorizing the USPTO to charge the Deposit Account in the amount of $400.00 for the issue fee. It appears that the Part B - Fee(s) Transmittal was received in the USPTO on June 26, 2006, as evidenced by Central Fax Center date-stamp. Accordingly, the issue fee was timely paid in response to the Notice of Allowance. The petition is **granted**.

The Notice of Abandonment is hereby withdrawn. The application is restored to pending status in view of the fact that a response was timely filed and received on June 26, 2006.

The matter is being referred to the Office of Patent Publications for processing as a patent.

Telephone inquiries concerning this matter may be directed to the undersigned at (571) 272-3211.

Christina Tartera Donnell

Christina Tartera Donnell
Senior Petitions Attorney
Office of Petitions

UNITED STATES PATENT AND TRADEMARK OFFICE

Commissioner for Patents
United States Patent and Trademark Office
P.O. Box 1450
Alexandria, VA 22313-1450
www.uspto.gov

Seth M. Wilson
Bulkley, Richardson and Gelinas, LLP
Suite 2700, 1500 Main Street
Springfield MA 01115-5507

COPY MAILED

JUN 2 2 2007

OFFICE OF PETITIONS

In re Application of :
FOLSOM et al. :
Application No. 29/202,341 : ON PETITION
Filed: 03/30/2004 :
Attorney Docket No. 26841-1 :

This is a corrected decision on the petition under 37 CFR 1.181, filed December 15, 2006, to withdraw the holding of abandonment for the above-identified application.

Upon further review, the Office has determined that this application became abandoned for failure to submit correct drawings in response to the Notice Regarding Drawings mailed on June 24, 2006.[1] The Notice set a two-month non-extendable period to correct the informalities. In the apparent absence of a timely filed response, the application was held abandoned on August 25, 2006. A Notice of Abandonment was mailed on December 7, 2006.

In view of the above, the decision granting the petition to withdraw the holding of abandonment mailed on June 8, 2007, and re-mailed on June 14, 2007, was in error. This application will remain in abandoned status until petitioner submits either (1) a grantable petition to revive under 37 CFR 1.137(a) or 1.137(b), the petition fee, corrected drawings, and a terminal disclaimer (and fee) or (2) a grantable petition to withdraw the holding of abandonment under 37 CFR 1.181 and corrected drawings.

Further correspondence with respect to this matter should be addressed as follows:

By mail: Mail Stop PETITIONS
Commissioner for Patents
Post Office Box 1450
Alexandria, VA 22313-1450

[1] USPTO records show that the issue fee was timely paid on June 26, 2006.

By hand: Customer Service Window
Mail Stop Petitions
Randolph Building
401 Dulany Street
Alexandria, VA 22314

By fax: (571) 273-8300
ATTN: Office of Petitions

Telephone inquiries concerning this matter may be directed to the undersigned at (571) 272-3211.

C. T. Donnell

Christina Tartera Donnell
Senior Petitions Attorney
Office of Petitions

Enclosures (2)

UNITED STATES PATENT AND TRADEMARK OFFICE

UNDER SECRETARY OF COMMERCE FOR INTELLECTUAL PROPERTY AND
DIRECTOR OF THE UNITED STATES PATENT AND TRADEMARK OFFICE

APPLICATION NUMBER	FILING/RECEIPT DATE	FIRST NAMES APPLICANT	ATTORNEY DOCKET NUMBER
29/202341	03/30/2004	FOLSOM, PETER	FLO-100 DIV

Dara L. Onofrio
ONOFRIO LAW
Suite 1600
1133 Broadway
New York NY 10010

Examiner
CLARK, DORIS

Art Unit
2914

Paper Number

Date Mailed: 06-24-06

Notice Regarding Drawings

Corrected drawings for the above-identified application, received in the USPTO on __08/30/2004___are still not acceptable for the reason(s) identified on the attached PTO-948. Applicant is given one opportunity to correct the informalities within a two-month time period from the mailing date of this Notice. **THIS TIME PERIOD IS NOT EXTENDABLE UNDER EITHER 37 CFR 1.136(a) OR 1.136(b). Failure to take corrective action within the set period will result in abandonment of the application.**

ATTACHMENT: PTO-948 Notice of Draftsperson's Patent Review
Nhan Tang –703-305-0333 – Ext. 132

RETURN CORRECTED DRAWINGS TO:
Commissioner for Patents
P.O. Box 1450
Alexandria, Virginia 22313-1450

Form PTO-948 (Rev. 06/03)
Application No. 29202341

U.S. DEPARTMENT OF COMMERCE
U.S. Patent and Trademark Office

NOTICE OF DRAFTSPERSON'S PATENT DRAWING REVIEW

The drawing(s) filed (insert date) 08/30/04 are:

A. ____ approved by the Draftsperson under 37 CFR 1.84 or 1.152.

B. ✓ objected to by the Draftsperson under 37 CFR 1.84 or 1.152 for the reasons indicated below. Corrected drawings are required.

1. DRAWINGS. 37 CFR 1.84(a): Acceptable categories of drawings: Black ink or Color (3 sets required).
___ Color drawings are not acceptable until petition is granted. Fig(s)____
___ Pencil and non black ink not permitted. Fig(s)____

2. PHOTOGRAPHS. 37 CFR 1.84(b)
___ One (1) full-tone set is required. Fig(s)____
___ Photographs may not be mounted. 37 CFR 1.84(e)
___ Photographs must meet paper size requirements of 37 CFR 1.84(f). Fig(s)____
___ Poor quality (half-tone). Fig(s)____

3. TYPE OF PAPER. 37 CFR 1.84(e)
___ Paper not flexible, strong, white, and durable. Fig(s)____
___ Erasures, alterations, overwritings, interlineations, folds, copy machine marks not accepted. Fig(s)____

4. SIZE OF PAPER. 37 CFR 1.84(f): Acceptable sizes:
21.0 cm by 29.7 cm (DIN size A4) or
21.6 cm by 27.9 cm (8 1/2x 11 inches)
___ All drawing sheets not the same size. Sheet(s)____
___ Drawings sheets not an acceptable size. Fig(s)____

5. MARGINS. 37 CFR 1.84(g): Acceptable margins:
Top 2.5 cm Left 2.5 cm Right 1.5 cm Bottom 1.0 cm
___ Margins not acceptable. Fig(s)____
____ Top (T) ____ Left (L)
____ Right (R) ____ Bottom (B)

6. VIEWS. 37 CFR 1.84(h)
REMINDER: Specification may require revision to correspond to drawing changes, e.g., if Fig. 1 is changed to Fig. 1A, Fig 1B and Fig. 1C, etc., the specification, at the Brief Description of the Drawings, must likewise be changed.
✓ Views not labeled separately or properly. Fig(s) 1-2-3

7. SECTIONAL VIEWS. 37 CFR 1.84(h)(3)
____ Sectional designation should be noted with Arabic or Roman numbers. Fig(s)____

8. ARRANGEMENT OF VIEWS. 37 CFR 1.84(i)
___ Words do not appear on a horizontal, left-to-right fashion when page is either upright or turned so that the top becomes the right side, except for graphs. Fig(s)____

9. SCALE. 37 CFR 1.84(k)
___ Scale not large enough to show mechanism without crowding when drawing is reduced in size to two-thirds in reproduction. Fig(s)____

10. CHARACTER OF LINES, NUMBERS, & LETTERS. 37 CFR 1.84(l)
___ Lines, numbers & letters not uniformly thick and well defined, clean, durable, and black (poor line quality). Fig(s)____

11. SHADING. 37 CFR 1.84(m)
___ Solid black areas pale. Fig(s)____
___ Solid black shading not permitted. Fig(s)____

12. NUMBERS, LETTERS, & REFERENCE CHARACTERS. 37 CFR 1.84(p)
___ Numbers and reference characters not plain and legible. Fig(s)____
___ Figure legends are poor. Fig(s)____
___ Numbers and reference characters not oriented in the same direction as the view. 37 CFR 1.84(p)(1) Fig(s)____
___ English alphabet not used. 37 CFR 1.84(p)(2) Fig(s)____
___ Numbers, letters and reference characters must be at least 32 cm (1/8 inch) in height. 37 CFR 1.84(p)(3). Fig(s)____

13. LEAD LINES. 37 CFR 1.84(q)
___ Lead lines missing. Fig(s)____

14. NUMBERING OF SHEETS OF DRAWINGS. 37 CFR 1.84(t)
___ Sheets not numbered consecutively, and in Arabic numbers beginning with number 1. Sheet(s)____

15. NUMBERING OF VIEWS. 37 CFR 1.84(u)
✓ Views not numbered consecutively, and in Arabic numerals, beginning with number 1. Fig(s) 1-3

16. DESIGN DRAWINGS. 37 CFR 1.152
___ Surface shading shown not appropriate. Fig(s)____
___ Solid black surface shading is not permitted except when used to represent the color black as well as color contrast. Fig(s)____

COMMENTS: Figs. should be renumbered Fig. 1-3

Reviewer Tang
If you have questions, call (703) 305-~~8000~~ 0333 x 132

Date 06/23/06
Attachment to Paper No. ____

UNITED STATES PATENT AND TRADEMARK OFFICE

Commissioner for Patents
United States Patent and Trademark Office
P.O. Box 1450
Alexandria, VA 22313-1450
www.uspto.gov

Seth M. Wilson
Bulkley, Richardson and Gelinas, LLP
Suite 2700, 1500 Main Street
Springfield MA 01115-5507

COPY MAILED
JUL 19 2007
OFFICE OF PETITIONS

In re Application of
Folsom et al.
Application No. 29/202,341
Filed: 03/30/2004
Attorney Docket No. 26841-1

ON PETITION

This is a decision on the renewed petition under 37 CFR 1.181, filed June 29, 2007, to withdraw the holding of abandonment for the above-identified application.

On June 24, 2006, the Office mailed a Notice Regarding Drawings, which set a two-month non-extendable period to correct the informalities. In the absence of a timely filed response, the application was held abandoned on August 25, 2006.[1] A Notice of Abandonment was mailed on December 7, 2006.

The practitioner asserted that he did not receive the Notice Regarding Drawings because the USPTO failed to mail the Notice to practitioner's address as filed with, and received by, the USPTO on June 23, 2006. Petitioner requested that the Office withdraw the holding of abandonment, accept the corrected drawings submitted with the present petition, and issue the patent.

A review of the record indicates that petitioner filed a Revocation of Power Attorney With New Power of Attorney and Change of Correspondence with the USPTO on June 23, 2006, prior to the mailing of the Notice Regarding Drawings. Although the Office received this document on June 23, 2006, it failed to enter the information into the record. Accordingly, the petition to withdraw the holding of abandonment is **GRANTED**.

The Office acknowledges receipt of the corrected drawings (Figures 1-3) submitted with this petition in response to the Notice of June 24, 2006.

This matter is being referred to the Office of Patent Publications for issuance of the patent.

Telephone inquiries concerning this matter may be directed to the undersigned at (571) 272-3211.

Christina Tartera Donnell

Christina Tartera Donnell
Senior Petitions Attorney
Office of Petitions

[1] USPTO records show that the issue fee was timely paid on June 26, 2006.

UNITED STATES PATENT AND TRADEMARK OFFICE

Commissioner for Patents
United States Patent and Trademark Office
P.O. Box 1450
Alexandria, VA 22313-1450
www.uspto.gov

OSTRAGER CHONG FLAHERTY & BROITMAN, P.C.
570 LEXINGTON AVENUE
FLOOR 17
NEW YORK NY 10022-6894

COPY MAILED
AUG 2 9 2008

In re Application of	:	
Guard et al.	:	
Application No. 29/202,347	:	ON PETITION
Filed: March 30, 2004	:	
Attorney Docket No. 04-0390	:	

This is a decision on the petition under 37 C.F.R. § 1.137(b), filed march 19, 2008, to revive the above-identified application.

The petition is **GRANTED**.

The petition satisfies the requirements of 37 CFR 1.137(b) in that petitioner has supplied (1) the reply in the form of a Notice of Appeal and a Pre-Appeal Brief Request for Review, (2) the petition fee, (3) a proper statement of unintentional delay, and (4) a terminal disclaimer.

The Notice of Appeal filed March 19, 2008, has been entered and made of record. Normally, the 2-month period for filing the appeal brief accompanied by the fee required by law, would run from the date of this decision. However, if view of the fact that a Pre-Appeal Brief Request for Review conference was filed concurrently with the Notice of Appeal, the time period set in 37 CFR 41.37(a)(1) is waived so that an appeal will not stand dismissed if an appeal brief is not filed within two months of the filing date of a notice of appeal, but is filed within one month of the decision on the request.

Telephone inquiries concerning this decision should be directed to the undersigned at (571) 272-3206.

This matter is being referred to Technology Center 2916 for processing of the Pre-Appeal Brief Request for Review submitted with the instant petition.

Liana Walsh
Petitions Examiner
Office of Petitions

UNITED STATES PATENT AND TRADEMARK OFFICE

Commissioner for Patents
United States Patent and Trademark Office
P.O. Box 1450
Alexandria, VA 22313-1450
www.uspto.gov

JUN 2 1 2004

JOSEPH J. VODHANEL, JR.
10937 GROVELAND AV
WHITTIER CA 90603

In re Application of	:	
Joseph J. Vodhanel, Jr.	:	
Serial No.: 29/202,380	:	DECISION ON PETITION
Filed: March 31, 2004	:	
For: Apparatus For Marking Cavity in Bun	:	

This is in response to applicants' petition filed March 31, 2004, to make the above-identified application special under the provisions of 37 CFR 1.102(c), based on the age of the applicant.

Applicant has satisfied the provisions set forth in M.P.E.P. 708.02, IV. Therefore the petition is **GRANTED**.

The application will be forwarded to the examiner for action on the merits commensurate with this decision.

Should there be any questions with regard to this letter please contact John Kittle by letter addressed to the Director, Technology Center 3700/2900, Washington, DC 20231, or by telephone at (703) 308-0873 or by facsimile transmission at (703) 308-3139.

John E. Kittle

John E. Kittle
Director,
Technology Center 3700/2900

UNITED STATES PATENT AND TRADEMARK OFFICE

Commissioner for Patents
United States Patent and Trademark Office
P.O. Box 1450
Alexandria, VA 22313-1450
www.uspto.gov

MICHAEL I. WOLFSON
GREENBERG TRAURIG
200 PARK AVENUE
NEW YORK, NY 10166

COPY MAILED

JUL 0 5 2006

OFFICE OF PETITIONS

In re Application of	:	
Greene et al.	:	
Application No. 29/202,436	:	ON PETITION
Filed: March 30, 2004	:	
Attorney Docket No. EURO-219A	:	
(86084.015001)		

This is a decision on the petition under 37 C.F.R. § 1.137(b), filed May 26, 2006, to revive the above-identified application.

The petition is **DISMISSED**.

Any request for reconsideration must be submitted within TWO (2) MONTHS from the mail date of this decision. No further petition fee is required for the request. Extensions of time under 37 CFR 1.136(a) are permitted. The reconsideration request should include a cover letter entitled "Renewed Petition under 37 CFR 1.137(b)." This is **not** a final agency action within the meaning of 5 U.S.C. § 704.

The above-identified application became abandoned for failure to submit formal drawings in a timely manner in reply to the Notice of Allowability mailed November 23, 2005, which set a non-extendable period for reply of three (3) months. Accordingly, the above-identified application became abandoned on February 24, 2006. A Notice of Abandonment was mailed on May 3, 2006.

A grantable petition under 37 CFR 1.137(b) must be accompanied by:
(1) the required reply,[1]
(2) the petition fee,
(3) a statement that the entire delay in filing the required reply from the due date for the reply until the filing of a grantable petition pursuant to 37 CFR 1.137(b) was unintentional, and
(4) a terminal disclaimer and fee if the application was filed on or before June 8, 1995 or if the application is a design application.

Where there is a question as to whether either the abandonment or the delay in filing a petition under 37 CFR 1.137 was unintentional, the Commissioner may require additional information.[2]

---

[1] In a nonprovisional application abandoned for failure to prosecute, the required reply may be met by the filing of a continuing application. In an application or patent, abandoned or lapsed for failure to pay the issue fee or any portion thereof, the required reply must be the payment of the issue fee or any outstanding balance thereof.

The instant petition lacks item (4). Since the instant application is a design application, a terminal disclaimer (with fee) is required for revival.

The petition fee is being charged to Deposit Account 50-1561.

Further correspondence with respect to this matter should be addressed as follows:

By mail: Mail Stop PETITIONS
Commissioner for Patents
Post Office Box 1450
Alexandria, VA 22313-1450

By hand: Customer Window located at:

U.S. Patent and Trademark Office
Customer Service Window Randolph Building
401 Dulany Street
Alexandria, VA 22314

By fax: (571) 273-8300
ATTN: Office of Petitions

Any questions concerning this matter may be directed to the undersigned at (571) 272-3206.

Liana Chase
Petitions Examiner
Office of Petitions

---

[2] See MPEP 711.03(c)(III)(C) and (D).

UNITED STATES PATENT AND TRADEMARK OFFICE

Commissioner for Patents
United States Patent and Trademark Office
P.O. Box 1450
Alexandria, VA 22313-1450
www.uspto.gov

MICHAEL I. WOLFSON
GREENBERG TRAURIG
200 PARK AVENUE
NEW YORK, NY 10166

COPY MAILED
DEC 21 2006
OFFICE OF PETITIONS

In re Application of	:	
Greene et al.	:	
Application No. 29/202,436	:	ON PETITION
Filed: March 30, 2004	:	
Attorney Docket No. EURO-219	:	
(86084.015001)		

This is a decision on the renewed petition under 37 C.F.R. § 1.137(b), filed July 17, 2006, to revive the above-identified application.

The petition is **GRANTED.**

This matter is being referred to the Publishing Division for processing into a patent.

Telephone inquiries regarding this decision should be directed to the undersigned at (571) 272-3206.

Liana Walsh
Petitions Examiner
Office of Petitions

UNITED STATES PATENT AND TRADEMARK OFFICE

Commissioner for Patents
United States Patent and Trademark Office
P.O. Box 1450
Alexandria, VA 22313-1450
www.uspto.gov

BEESON SKINNER BEVERLY, LLP
ONE KAISER PLAZA
SUITE 750
OAKLAND, CA 94612

COPY MAILED
OCT 25 2006
OFFICE OF PETITIONS

In re Application of	:	
Douglas J. Herst et al	:	
Application No. 29/202,456	:	ON PETITION
Filed: March 31, 2004	:	
Attorney Docket No. D202N-106I-D	:	

This is a decision on the petition under 37 CFR 1.137(b), filed March 9, 2006, to revive the above-identified application.

The petition is **GRANTED.**

The above-identified application became abandoned for failure to submit the Issue fee in a timely manner in reply to the Notice of Allowance mailed November 3, 2005, which set a statutory period for reply of three (3) months. Accordingly, the above-identified application became abandoned on February 4, 2006.

The petition satisfies the conditions for revival pursuant to the provisions of 37 CFR 1.137(b) in that (1) the reply in the form of payment of the issue fee; (2) the petition fee; and (3) the required statement of unintentional delay have been received. Accordingly, the issue fee is accepted as having been unintentionally delayed.

Telephone inquiries concerning this decision should be directed to the undersigned at (571) 272-3210.

This matter is being referred to the Publishing Division for further processing.

Irvin Dingle
Petitions Examiner
Office of Petitions

UNITED STATES PATENT AND TRADEMARK OFFICE

Commissioner for Patents
United States Patent and Trademark Office
P.O. Box 1450
Alexandria, VA 22313-1450
www.uspto.gov

JUN 2 1 2004

DOROTHY S. MORSE, ESQ.
515 PARK DRIVE NW
BRADENTON FL 34209-1847

In re Application of	:	
David K. Pearson, Sr.	:	
Serial No.: 29/202,500	:	DECISION ON PETITION
Filed: March 31, 2004	:	
For: Vernier Adjustable Timing Gears Having	:	
An Unequal Number of Hole Patterns in	:	
Adjoining Parts	:	

This is in response to applicants' petition filed March 31, 2004, to make the above-identified application special under the provisions of 37 CFR 1.102(c), based on the age of the applicant.

Applicant has satisfied the provisions set forth in M.P.E.P. 708.02, IV. Therefore the petition is **GRANTED**.

The application will be forwarded to the examiner for action on the merits commensurate with this decision.

Should there be any questions with regard to this letter please contact John Kittle by letter addressed to the Director, Technology Center 3700/2900, Washington, DC 20231, or by telephone at (703) 308-0873 or by facsimile transmission at (703) 308-3139.

John E. Kittle

John E. Kittle
Director,
Technology Center 3700/2900

UNITED STATES PATENT AND TRADEMARK OFFICE

Commissioner for Patents
United States Patent and Trademark Office
P.O. Box 1450
Alexandria, VA 22313-1450
www.uspto.gov

8/4/05

ROSENBERG, KLEIN & LEE
3458 ELLICOTT CENTER DRIVE, SUITE 101
ELLICOTT CITY, MD 21043

In re Application of
Yu Li
Serial No.: 29/202,504
Filed: April 1, 2004
Attorney Docket No.: MR1115-513

: PETITION DECISION

This is a decision on applicant's petition to revive patent application under 37 CFR 1.137(b), received April 5, 2005, to revive an unintentionally abandoned application.

This application became abandoned for failure to respond to the Notice of Allowance mailed October 21, 2004, which set a three-month statutory period to submit the Issue Fee. As no response was received by January 21, 2005, a Notice of Abandonment was mailed March 8, 2005. Applicant then filed this petition.

A grantable petition for a design application under 37 CFR 1.137(b), as revised December 1, 1997, requires four items: (1) a petition and petition fee; (2) a complete response if not earlier made; (3) a statement that the entire period of delay in prosecution was unintentional; and (4) a terminal disclaimer and disclaimer fee. The requirement for a terminal disclaimer has been waived, as the petition was filed within one month of the mailing of the Notice of Abandonment.

Applicant's petition is **GRANTED**.

The terminal disclaimer fee of $130.00 will be refunded to applicant's Deposit Account 18-2011, as directed.

The application will be forwarded to Publication Division for printing as a patent in due course.

Should there be any questions with respect to this decision, please contact Sandra Morris; by mail addressed to: Director, Technology Center 1700/2900, P.O. Box 1450, Alexandria, VA 22313-1450; or by telephone at (571) 272-2622.

Jacqueline M. Stone

Jacqueline Stone
Director, Technology Center 1700/2900

UNITED STATES PATENT AND TRADEMARK OFFICE

Commissioner for Patents
United States Patent and Trademark Office
P.O. Box 1450
Alexandria, VA 22313-1450
www.uspto.gov

JUL 2 1 2004

MICHAEL A. PAINTER
SUITE 850
8484 WILSHIRE BOULEVARD
BEVERLY HILLS CA 90211

In re Application of	:	
Rami Ben-Moshe	:	
Serial No.: 29/202,520	:	DECISION ON
Filed: April 1, 2004	:	PETITON TO MAKE SPECIAL
For: Portable Cooler	:	

This is in response to applicants' petition filed June 15, 2004, to make the above-identified application special under the provisions of 37 CFR 1.102(d), based on infringement.

Applicant has satisfied the provisions set forth in M.P.E.P. 708.02, II. Therefore the petition is **GRANTED**.

The application will be forwarded to the examiner for action on the merits commensurate with this decision.

Should there be any questions with regard to this letter please contact John Kittle by letter addressed to the Director, Technology Center 3700/2900, P.O. Box 1450 Alexandria, VA 22313-1450 or by telephone at (703) 308-0873 or by facsimile transmission at (703) 308-3139.

John E. Kittle

John E. Kittle
Director
Technology Center 3700/2900

UNITED STATES PATENT AND TRADEMARK OFFICE

Commissioner for Patents
United States Patent and Trademark Office
P.O. Box 1450
Alexandria, VA 22313-1450
www.uspto.gov

BARNES & THORNBURG, LLP
P.O. BOX 2786
CHICAGO, IL 60690-2786

COPY MAILED
MAR 27 2006
OFFICE OF PETITIONS

In re Application of

Ball, et al.

Application No. 29/202,529

Filed: March 31, 2004

Attorney Docket No. 36865-95807

DECISION ON PETITION

This is a decision on the petition under 37 CFR §1.137(b), January 13, 2006, to revive the above-identified application.

The petition is **dismissed**.

Any request for reconsideration of this decision must be submitted within TWO (2) MONTHS from the mail date of this decision. Extensions of time under 37 CFR 1.136(a) are permitted. The reconsideration request should include a cover letter entitled "Renewed Petition" under 37 CFR 1.137(b)."

This application became abandoned for failure to respond in a timely manner to the Notice of Allowance and Issue Fee Due mailed April 15, 2005. The notice allowed a statutory period for reply of three months from its mailing date. No reply was received within the allowable period, and the application became abandoned on July 16, 2005.

Effective December 1, 1997, the provisions of 37 CFR 1.137(b) now provide that where the delay in reply was unintentional, a petition may be filed to revive an abandoned application or a lapsed patent pursuant to 37 CFR 1.137(b). A grantable petition pursuant to 37 CFR 1.137(b) must be accompanied by:

(1) the required reply, unless previously filed. In a non-provisional application abandoned for failure to prosecute, the required reply may be met by the filing of a continuing application. In an application or patent, abandoned or lapsed for failure to pay the issue fee, or any portion thereof, the required reply must be the payment of the issue fee or any outstanding balance thereof.

(2) the petition fee as set forth in 37 CFR 1.17(m);

(3) a statement that the entire delay in filing the required reply from the due date for the reply until the filing of a grantable petition pursuant to 37 CFR 1.137(b) was unintentional. The Commissioner may require additional information where there is a question whether the delay was unintentional; and

(4) any terminal disclaimer (and fee set forth in 37 CFR 1.20(d)) required pursuant to 37 CFR 1.137(d).

The instant petition does not satisfy the requirements of item (4) above.

As to item (4), paragraph (4) of the petition document is noted as being the terminal disclaimer required by 37 CFR 1.137(d), however; the language as provided in the paragraph (4) is lacking. Petitioner should file a renewed petition with the completed Form PTO/SB/62, titled "Terminal Disclaimer to Accompany Petition". The form is enclosed for petitioner's convenience.

Further correspondence with respect to this matter should be addressed as follows:

By mail: Mail Stop Petitions
Commissioner for Patents
United States Patent and Trademark Office
Box 1450
Alexandria, VA 22313-1450

By facsimile: (571) 273-8300

Telephone inquiries concerning this matter may be directed to the undersigned at (571) 272-3222.

Kenya A. McLaughlin
Petitions Attorney
Office of Petitions

Enclosure: Form PTO/SB/62

UNITED STATES PATENT AND TRADEMARK OFFICE

Commissioner for Patents
United States Patent and Trademark Office
P.O. Box 1450
Alexandria, VA 22313-1450
www.uspto.gov

COPY MAILED

MAY 18 2006

OFFICE OF PETITIONS

BARNES & THORNBURG, LLP
P.O. BOX 2786
CHICAGO IL 60690-2786

In re Application of:	:	
Ball et al.	:	
Application No. 29/202,529	:	DECISION ON PETITION
Filed: March 31, 2004	:	
Attorney Docket No. 36865-95807	:	

This is a decision on the renewed petition under 37 CFR §1.137(b), May 8, 2006, to revive the above-identified application.

The renewed petition is **granted.**

This application became abandoned for failure to respond in a timely manner to the Notice of Allowance and Issue Fee Due mailed April 15, 2005. The notice allowed a statutory period for reply of three months from its mailing date. No reply was received within the allowable period, and the application became abandoned on July 16, 2005. A petition udenr3 7 CFR 1.137(b) was filed on January 13, 2006, and dismissed by a decision mailed March 27, 2006.

The terminal disclaimer, filed May 8, 2006, is noted and made of record.

The application is being forwarded to the Office of Patent Publications for further processing.

Telephone inquiries concerning this matter may be directed to the undersigned at (571) 272-3222.

Kenya A. McLaughlin
Petitions Attorney
Office of Petitions

UNITED STATES PATENT AND TRADEMARK OFFICE

Commissioner for Patents
United States Patent and Trademark Office
P.O. Box 1450
Alexandria, VA 22313-1450
www.uspto.gov

JUN 23 2004

David T. Bracken
The Law Office of David T. Bracken
4839 Bond Avenue
Orange CA 92869

In re Application of	:	
Zhihao Huang	:	
Serial No.: 29/202,532	:	
Filed: April 1, 2004	:	DECISION ON PETITION
For: Rotating Arm Flat Top Scale	:	

This is in response to applicants' Petition filed May 24, 2004, to make the above-identified application special under the provisions of 37 CFR 1.102(d), based on prospective manufacture.

Applicant has satisfied the provisions set forth in M.P.E.P. 708.02, II. Therefore the petition is **GRANTED**.

The application will be forwarded to the examiner for action on the merits commensurate with this decision.

Should there be any questions with regard to this letter please contact John Kittle, by letter addressed to the Director, Technology Center 3700/2900, P.O. Box 1450 Alexandria, VA 22313-1450, or by telephone at (703) 308-0873 or by facsimile transmission at (703) 308-3139.

John E. Kittle

John E. Kittle
Director
Technology Center 3700/2900

UNITED STATES PATENT AND TRADEMARK OFFICE

Commissioner for Patents
United States Patent and Trademark Office
P.O. Box 1450
Alexandria, VA 22313-1450
www.uspto.gov

ASHKAN NAJAFI, P.A.
6817 SOUTHPOINT PARKWAY
SUITE 2301
JACKSONVILLE FL 32216

COPY MAILED

FEB 0 2 2006

OFFICE OF PETITIONS

In re Application of :
William Lewandowski :
Application No. 29/202,542 :
Filed: April 2, 2004 :
Title: Mood Indicating Device :

ON PETITION

This is a decision on the petition under 37 CFR 1.181 to withdraw the holding of abandonment filed December 23, 2005 and December 27, 2005.

The petition to withdraw the holding of abandonment is **GRANTED**.

This application was held abandoned June 22, 2005 for failure to timely reply to the Office Action (Ex Parte Quayle Action) mailed on April 21, 2005. The Office Action set a two (2) month extendable time period for reply. A Notice of Abandonment was mailed December 13, 2005.

Petitioner asserts that a reply to the non-final Office Action was timely submitted on May 16, 2005. As evidence, petitioner has submitted a copy of the reply which contains a certificate of mailing pursuant to 37 CFR 1.8 and a copy of a date stamped postcard receipt which serves as prima facie evidence.

The response submitted May 16, 2005 has not been located in the Office, however, in view of the evidence submitted, the response is deemed timely.

The Notice of Abandonment is hereby vacated and the holding of abandonment is withdrawn.

The address on the petition differs from the correspondence address of record. While a courtesy copy of this decision is being mailed to the person signing the present petition, all future correspondence will be directed to the address currently of record until such time as appropriate instructions are received to the contrary.

The application file is being forwarded to the Technology Center 2900 for further processing.

Telephone inquiries concerning this matter should be directed to the undersigned at (571) 272-3215.

Charlema R. Grant
Petitions Attorney
Office of Petitions

cc: Ashkan Najafi
113 Lamplighter Lane
Ponte Vedra Beach, FL 32082

SPE RESPONSE FOR CERTIFICATE OF CORRECTION

Paper No.: _____

DATE : 7/22/2005

TO SPE OF : ART UNIT **2900(2911)**

SUBJECT : Request for Certificate of Correction on Patent No.: **D502,923**

A response is requested with respect to the accompanying request for a certificate of correction.

Please complete this form and return with file, within **7** days to:
Certificates of Correction Branch - PK 3-922
Palm location **7580** - Tel. No. 305-8309

With respect to the change(s) requested, correcting Office and/or Applicant's errors, should the patent read as shown in the certificate of correction? No new matter should be introduced, nor should the scope or meaning of the claims be changed.

Drawing change okay? YES, drawing change is fine.

Ernest C. White, LIE305-8339
Certificates of Correction Branch

Thank You For Your Assistance

The request for issuing the above-identified correction(s) is hereby:
Note your decision on the appropriate box.

- ☐ **Approved** — **All** changes apply.
- ☐ **Approved in Part** — Specify below which changes **do not** apply.
- ☐ **Denied** — State the reasons for denial below.

Comments:

Drawing change is fine.

/Cathron Brooks/
Supervisory Patent Examiner

SPE

2911

Art Unit

SPE RESPONSE FOR CERTIFICATE OF CORRECTION

Paper No.: _____

DATE : 7/22/2005

TO SPE OF : ART UNIT 2900(2911)

SUBJECT : Request for Certificate of Correction on Patent No.: D502,923

A response is requested with respect to the accompanying request for a certificate of correction.

Please complete this form and return with file, within **7** days to:
Certificates of Correction Branch - PK 3-922
Palm location **7580** - Tel. No. 305-8309

With respect to the change(s) requested, correcting Office and/or Applicant's errors, should the patent read as shown in the certificate of correction? No new matter should be introduced, nor should the scope or meaning of the claims be changed.

Drawing change okay? YES, drawing change is fine.

Ernest C. White, LIE305-8339

Thank You For Your Assistance

Certificates of Correction Branch

The request for issuing the above-identified correction(s) is hereby:

Note your decision on the appropriate box.

- ☐ **Approved** — **All** changes apply.
- ☐ **Approved in Part** — Specify below which changes **do not** apply.
- ☐ **Denied** — State the reasons for denial below.

Comments:

Drawing change is fine.

/Cathron Brooks/

Supervisory Patent Examiner

2911

SPE **Art Unit**

UNITED STATES PATENT AND TRADEMARK OFFICE

Commissioner for Patents
United States Patent and Trademark Office
P.O. Box 1450
Alexandria, VA 22313-1450
www.uspto.gov
DIW Nov-06

DEERE & COMPANY
ONE JOHN DEERE PLACE
MOLINE IL 61265

COPY MAILED
NOV 29 2006
OFFICE OF PETITIONS

In re Application of	:	
Arthur et al.	:	
Application No. 29/202,682	:	ON PETITION
Filed: 2 April, 2004	:	
Atty Docket 16666-US	:	

This is a decision in reference to the petition filed under 37 CFR 1.181 on 19 May, 2006, to withdraw the holding of abandonment.

This application became abandoned on 9 June, 2005, for failure to timely submit corrected drawings as required by the Notice of Allowability mailed on 8 March, 2005, which set a three (3) month statutory period for reply. Notice of Abandonment was mailed on 17 August, 2005. The present petition was filed on 19 May, 2006.

At the outset, it is noted that the petition to withdraw the holding of abandonment is untimely, as it was not filed within two months of the date of mailing of the Notice of Abandonment.

MPEP 711.03(c) states, in pertinent part:

In any design application, any utility application filed before June 8, 1995, or any plant application filed before June 8, 1995, if applicant receives a notice of abandonment, any petition to withdraw the holding of abandonment that is not filed within two months of the mail date of the notice of abandonment will not (absent extraordinary circumstances) be treated on its merits unless accompanied by a terminal disclaimer under 37 CFR 1.321(a), and the required fee set forth in 37 CFR 1.20(d). The period to be disclaimed is the terminal part of the term of any patent granted on the application, or of any patent granted on any utility or plant application that claims the benefit of the filing date of the application under 35 U.S.C. 120, 121, or

365(c), equivalent to the period between: (A) the date that is two months after the mail date of the notice of abandonment; and (B) the filing date of a grantable petition to withdraw the holding of abandonment.

Petitioners assert that the Examiner agreed, on 18 May, 2005, during a telephone call, to mail an Examiner's Amendment to resolve the corrected drawing requirement, and that, as such, corrected drawings were not required to be filed.

Petitioners' argument has been carefully considered, but is not persuasive.

In this regard, 37 CFR 1.135 states:

> (a) If an applicant of a patent application fails to reply within the time period provided under § 1.134 and § 1.136, the application will become abandoned unless an Office action indicates otherwise.
> (b) Prosecution of an application to save it from abandonment pursuant to paragraph (a) of this section must include such complete and proper reply as the condition of the application may require…

The Notice of Allowability mailed on 8 March, 2005, set a three (3) month statutory period for reply, and stated that corrected drawings were required. Petitioner, however, concededly failed to respond to the Office action. As such, the application became abandoned for failure to timely respond to the outstanding Office action.

Further, the showing of record does not support petitioners' assertion that the Examiner agreed to withdraw the requirement for corrected drawings or correct the drawings *sua sponte*. In this regard, the official file constitutes the showing of record. A review of the file reveals that the Notice mailed on 8 March, 2005, was not withdrawn or vacated. In the absence of evidence on the record that the subject Notice was withdrawn or vacated, petitioners' argument that no reply was required to the Notice of Allowability mailed on 8 March, 2005, is not persuasive.

Lastly, with regard to petitioners' implicit assertion that the examiner had agreed that no new drawings were required, there is no showing in the written record to support that allegation. As MPEP 711.03(c) states, a delay caused by an applicant's lack of knowledge or improper application of the patent statute, rules of practice or the MPEP is not rendered "unavoidable" due to: (A)

the applicant's reliance upon oral advice from USPTO employees; or (B) the USPTO's failure to advise the applicant of any deficiency in sufficient time to permit the applicant to take corrective action. See In re Sivertz, 227 USPQ 255, 256 (Comm'r Pat. 1985).

37 CFR 1.2 states that the action of the Patent and Trademark Office will be based exclusively on the written record in the Office. No attention will be paid to any alleged oral promise, stipulation, or understanding in relation to which there is disagreement or doubt.

As such, the showing of record is that the abandonment resulted from the failure of petitioners to respond to the Office action, rather than an error on the part of the USPTO.

As such the application is properly held abandoned.

The petition is **DISMISSED.**

Petitioner is advised to consider filing a petition to revive under 37 C.F.R. 1.137(b).

Any request for reconsideration must be filed within **TWO (2) MONTHS** of the date of this decision.

Further correspondence with respect to this matter should be addressed as follows:

By mail: Mail Stop Petition
Commissioner for Patents
P.O. Box 1450
Alexandria, VA 22313-1450

By FAX: (571) 273-8300
Attn: Office of Petitions

By hand: Customer Service Window
Mail Stop Petition
Randolph Building
401 Dulany Street
Alexandria, VA 22314

Telephone inquiries related to this decision should be directed to the undersigned at 571-272-3231.

D Wood

Douglas I. Wood
Senior Petitions Attorney
Office of Petitions

UNITED STATES PATENT AND TRADEMARK OFFICE

Commissioner for Patents
United States Patent and Trademark Office
P.O. Box 1450
Alexandria, VA 22313-1450
www.uspto.gov
DIW May-07

DEERE & COMPANY
ONE JOHN DEERE PLACE
MOLINE IL 61265

COPY MAILED

MAY 08 2007

OFFICE OF PETITIONS

In re Application of :
Arthur et al. :
Application No. 29/202,682 : DECISION ON PETITION
Filed: 2 April, 2004 :
Attorney Docket Number 16666-US :

This is a decision on the petition filed under 37 CFR 1.137(b),[1] on 15 February, 2007, to revive the above-identified application.

The petition is **GRANTED**.

The application became abandoned on 9 June, 2005, for failure to timely submit corrected drawings as required by the Notice of Allowability mailed on 8 March, 2005, which set a three (3)-month statutory period for reply Notice of Abandonment was mailed on 17 August, 2005. The petition to withdraw the holding of abandonment filed on 19 May, 2006, was dismissed on 29 November, 2006.

---

[1] Effective December 1, 1997, the provisions of 37 CFR 1.137(b) now provide that where the delay in reply was unintentional, a petition may be filed to revive an abandoned application or a lapsed patent pursuant to 37 CFR 1.137(b). A grantable petition filed under the provisions of 37 CFR 1.137(b) must be accompanied by:

(1) the required reply, unless previously filed. In a nonprovisional application abandoned for failure to prosecute, the required reply may be met by the filing of a continuing application. In a nonprovisional utility or plant application filed on or after June 8, 1995, and abandoned for failure to prosecute, the required reply may also be met by the filing of a request for continuing examination in compliance with § 1.114. In an application or patent, abandoned or lapsed for failure to pay the issue fee or any portion thereof, the required reply must be the payment of the issue fee or any outstanding balance thereof. In an application abandoned for failure to pay the publication fee, the required reply must include payment of the publication fee.

(2) the petition fee as set forth in 37 CFR 1.17(m);

(3) a statement that the entire delay in filing the required reply from the due date for the reply until the filing of a grantable petition pursuant to 37 CFR 1.137(b) was unintentional. The Commissioner may required additional information where there is a question whether the delay was unintentional; and

(4) any terminal disclaimer (and fee as set forth in 37 CFR 1.20(d)) required pursuant to 37 CFR 1.137(c)).

Since this application is revived for purposes of continuity only with the Continued Prosecution Application (CPA) filed on 15 February, 2007, and since continuity has been established by this decision reviving the application, the application is again abandoned in favor of the above-referenced CPA.

The terminal disclaimer filed on 15 February, 2007, under 37 CFR 1.137(c) has been entered and made of record. Effective 8 September, 2000, 37 CFR 1.137(c)(1) has been added to state that a terminal disclaimer filed pursuant to this rule must dedicate to the public a terminal part of the term of any patent granted thereon equivalent to the lesser of: 1) the period of abandonment of the application; or 2) the period extending beyond twenty years from the date on which the application for patent was filed in the United States, or, if the application contains a specific reference to an earlier filed application(s) under 35 U.S.C. 120, 121, or 365(c).[2] Accordingly, the period of the terminal disclaimer filed on 15 February, 2007, will be equivalent to the lesser period (1) or (2), as noted above, for this application

Receipt of the amendment and two (2) sheets of corrected drawings filed with the petition on 15 February, 2007, is acknowledged.

The application is being referred to Technology Center Art Unit 2912 for processing of the CPA filed on 15 February, 2007.

Telephone inquiries concerning this matter may be directed to the undersigned at (571)272-3231.

D Wood

Douglas I. Wood
Senior Petitions Attorney
Office of Petitions

[2] 65 Fed. Reg. 54,674 (2000).

REQUEST FOR WITHDRAWAL AS ATTORNEY OR AGENT		
	Application No.	29/202,685
	Filing Date	April 1, 2004
	First Named Inventor	Simpson
	Group Art Unit	2913
	Examiner Name	Stacia Cadmus
	Attorney Docket No.	47968/276828

Approved 5/8/06
Jacqueline M. Stone
Jacqueline M. Stone, Director
Technology Center 1700/2900

To: Commissioner for Patents
P.O. Box 1450
Alexandria, VA 22313-1450

Our firm (Customer Number 00826) hereby applies to withdraw as attorney or agent for the above-identified application.

The reasons for this request are:

Client has not responded to numerous calls, e-mails, and other written correspondence, and has not kept current with their account.

☐ The correspondence address is NOT affected by this withdrawal.
☒ Change the correspondence address and direct all future correspondence to:

David T. Simpson
160 Pebble Creek Drive
Covington, Georgia 30016

Respectfully submitted,

Scott E. Brient

Scott E. Brient
Registration No. 44,561

CUSTOMER NO. 00826
ALSTON & BIRD LLP
Bank of America Plaza
101 South Tryon Street, Suite 4000
Charlotte, NC 28280-4000
Tel Atlanta Office (404) 881-7000
Fax Atlanta Office (404) 881-7777

CERTIFICATION OF FACSIMILE TRANSMISSION

I hereby certify that this paper is being facsimile transmitted to the US Patent and Trademark Office Fax No. (571) 273-8300 on the date shown below.

Laisha Richardson 9/15/05
Laisha Richardson Date

BEST AVAILABLE COPY

UNITED STATES PATENT AND TRADEMARK OFFICE

Commissioner for Patents
United States Patent and Trademark Office
P.O. Box 1450
Alexandria, VA 22313-1450
www.uspto.gov

MICHAEL J. BOOTCHECK, LLC
P.O. BOX 3505
MCDONOUGH GA 30253

COPY MAILED

AUG 21 2007

OFFICE OF PETITIONS

In re Application of	:	
David T. Simpson	:	
Application No. 29/202685	:	
Filing or 371(c) Date: 04/01/2004	:	
Attorney Docket Number:	:	
2002.0002USD1	:	ON PETITION

This is a decision on the "Petition to Withdraw Holding of Abandonment of Application Under 37 CFR § 1.181 (No Fee Required), filed June 25, 2007.

This Petition is hereby **granted**.

The above-identified application became abandoned for failure to timely and properly reply to the Office Communication, mailed October 19, 2006. The Office Communication set a one (1) month period for reply. No response having been received, the application became abandoned on November 20, 2006. A Notice of Abandonment was mailed June 14, 2007.

With the instant petition, Applicant has demonstrated non-receipt of the Office action by a preponderance of the evidence[1].

In view of the foregoing, the petition is granted. The holding of abandonment is hereby withdrawn.

No petition fee has been charged and none is due.

The application will be referred to Technology Center Art Unit 2913 for re-mailing of the Office action and re-setting the period for reply.

Telephone inquiries concerning this Decision should be directed to the undersigned at (571) 272-3232.

Derek L. Woods
Attorney
Office of Petitions

[1] A review of Office records reveals that the Office action was inadvertently mailed to an incorrect correspondence address.

REQUEST FOR WITHDRAWAL AS ATTORNEY OR AGENT		
	Application No.	29/202,686
	Filing Date	April 1, 2004
	First Named Inventor	Simpson
	Group Art Unit	2913
	Examiner Name	Stacia Cadmus
	Attorney Docket No.	47968/271904

To: Commissioner for Patents
P.O. Box 1450
Alexandria, VA 22313-1450

Our firm (Customer Number 00826) hereby applies to withdraw as attorney or agent for the above-identified application.

The reasons for this request are:

Client has not responded to numerous calls, e-mails, and other written correspondence, and has not kept current with their account.

☐ The correspondence address is NOT affected by this withdrawal.
☒ Change the correspondence address and direct all future correspondence to:

David T. Simpson
160 Pebble Creek Drive
Covington, Georgia 30016

Approved 5-8-06
Jacqueline M. Stone
Jacqueline M. Stone, Director
Technology Center 1700/2900

Respectfully submitted,

Scott E. Brient

Scott E. Brient
Registration No. 44,561

CUSTOMER NO. 00826
ALSTON & BIRD LLP
Bank of America Plaza
101 South Tryon Street, Suite 4000
Charlotte, NC 28280-4000
Tel Atlanta Office (404) 881-7000
Fax Atlanta Office (404) 881-7777

CERTIFICATION OF FACSIMILE TRANSMISSION

I hereby certify that this paper is being facsimile transmitted to the US Patent and Trademark Office Fax No. (571) 273-8300 on the date shown below.

Laisha Richardson 9/15/05
Laisha Richardson Date

UNITED STATES PATENT AND TRADEMARK OFFICE

Commissioner for Patents
United States Patent and Trademark Office
P.O. Box 1450
Alexandria, VA 22313-1450
www.uspto.gov

MICHAEL J. BOOTCHECK, LLC
P.O. BOX 3505
MCDONOUGH GA 30253

COPY MAILED

AUG 2 4 2007

OFFICE OF PETITIONS

In re Application of :
David T. Simpson :
Application No. 29/202686 :
Filing or 371(c) Date: 04/01/2004 :
Attorney Docket Number: :
2002.0003USD1 : ON PETITION

This is a decision on the "Petition to Withdraw Holding of Abandonment of Application Under 37 CFR § 1.181 (No Fee Required), filed June 24, 2007.

This Petition is hereby **granted**.

The above-identified application became abandoned for failure to timely and properly reply to the Office Communication, mailed September 11, 2006. The Office Communication set a one (1) month period for reply. No response having been received, the application became abandoned on October 12, 2006. A Notice of Abandonment was mailed April 24, 2007.

With the instant petition, Applicant has demonstrated non-receipt of the Office action by a preponderance of the evidence[1].

In view of the foregoing, the petition is granted. The holding of abandonment is hereby withdrawn.

No petition fee has been charged and none is due.

The application will be referred to Technology Center Art Unit 2913 for re-mailing of the Office action and re-setting the period for reply.

Telephone inquiries concerning this Decision should be directed to the undersigned at (571) 272-3232.

Derek L. Woods
Attorney
Office of Petitions

[1] Office records reveal that the Office changed the correspondence address in accordance with a Request for Withdrawal of Attorney, filed September 15, 2006, on May 8, 2006, when the request was granted, and subsequently mailed the Office communication to that address, contrary to the Power of Attorney filed January 26, 2007.

REQUEST FOR WITHDRAWAL AS ATTORNEY OR AGENT		
	Application No.	29/202,687
	Filing Date	April 1, 2004
	First Named Inventor	Simpson
	Group Art Unit	2913
	Examiner Name	Stacia Cadmus
	Attorney Docket No.	47968/276832

To: Commissioner for Patents
P.O. Box 1450
Alexandria, VA 22313-1450

Our firm (Customer Number 00826) hereby applies to withdraw as attorney or agent for the above-identified application.

The reasons for this request are:

Client has not responded to numerous calls, e-mails, and other written correspondence, and has not kept current with their account.

☐ The correspondence address is NOT affected by this withdrawal.
☒ Change the correspondence address and direct all future correspondence to:

David T. Simpson
160 Pebble Creek Drive
Covington, Georgia 30016

Approved 5-8-06
Jacqueline M. Stone
Jacqueline M. Stone, Director
Technology Center 1700/2900

Respectfully submitted,

Scott E. Brient
Scott E. Brient
Registration No. 44,561

CUSTOMER NO. 00826
ALSTON & BIRD LLP
Bank of America Plaza
101 South Tryon Street, Suite 4000
Charlotte, NC 28280-4000
Tel Atlanta Office (404) 881-7000
Fax Atlanta Office (404) 881-7777

CERTIFICATION OF FACSIMILE TRANSMISSION

I hereby certify that this paper is being facsimile transmitted to the US Patent and Trademark Office Fax No. (571) 273-8300 on the date shown below.

Laisha Richardson 9/15/05
Laisha Richardson Date

BEST AVAILABLE COPY

UNITED STATES PATENT AND TRADEMARK OFFICE

COMMISSIONER FOR PATENTS
UNITED STATES PATENT AND TRADEMARK OFFICE
P.O. BOX 1450
ALEXANDRIA, VA 22313-1450
www.uspto.gov

CHARLES E. BAXLEY, ESQ.
90 JOHN STREET
THIRD FLOOR
NEW YORK, NY 10038

APR 18 2005

In re Application of
Yung-Hsiang Wu
Serial No.: 29/202,705
Filed: April 1, 2004
Attorney Docket No.: 14340 B

: PETITION DECISION

This is a decision on applicant's petition to revive patent application under 37 CFR 1.137(b), received February 4, 2005, to revive an unintentionally abandoned application.

This application became abandoned for failure to respond to the Notice of Allowance mailed September 23, 2004, which set a three-month statutory period to submit the Issue Fee. As no response was received by December 23, 2004, the application was abandoned. Applicant then filed this petition.

A grantable petition for a design application under 37 CFR 1.137(b), as revised December 1, 1997, requires four items: (1) a petition and petition fee; (2) a complete response if not earlier made; (3) a statement that the entire period of delay in prosecution was unintentional; and (4) a terminal disclaimer and disclaimer fee. The requirement for a terminal disclaimer has been waived, as the petition was filed before the mailing of the Notice of Abandonment.

Applicant's petition is **GRANTED**.

The application will be forwarded to Publication Division for printing as a patent in due course.

Should there be any questions with respect to this decision, please contact Sandra Morris; by mail addressed to: Director, Technology Center 1700/2900, P.O. Box 1450, Alexandria, VA 22313-1450; or by telephone at (571) 272-2622.

JMStone
Jacqueline Stone
Director, Technology Center 1700/2900

UNITED STATES PATENT AND TRADEMARK OFFICE

COMMISSIONER FOR PATENTS
UNITED STATES PATENT AND TRADEMARK OFFICE
P.O. BOX 1450
ALEXANDRIA, VA 22313-1450
www.uspto.gov

APR 18 2005

CHARLES E. BAXLEY, ESQ.
90 JOHN STREET
THIRD FLOOR
NEW YORK, NY 10038

In re Application of
Yung-Hsiang Wu
Serial No.: 29/202,707
Filed: April 1, 2004
Attorney Docket No.: 14341 B

: PETITION DECISION

This is a decision on applicant's petition to revive patent application under 37 CFR 1.137(b), received February 4, 2005, to revive an unintentionally abandoned application.

This application became abandoned for failure to respond to the Notice of Allowance mailed September 23, 2004, which set a three-month statutory period to submit the Issue Fee. As no response was received by December 23, 2004, the application was abandoned. Applicant then filed this petition.

A grantable petition for a design application under 37 CFR 1.137(b), as revised December 1, 1997, requires four items: (1) a petition and petition fee; (2) a complete response if not earlier made; (3) a statement that the entire period of delay in prosecution was unintentional; and (4) a terminal disclaimer and disclaimer fee. The requirement for a terminal disclaimer has been waived, as the petition was filed before the mailing of the Notice of Abandonment.

Applicant's petition is **GRANTED**.

The application will be forwarded to Publication Division for printing as a patent in due course.

Should there be any questions with respect to this decision, please contact Sandra Morris; by mail addressed to: Director, Technology Center 1700/2900, P.O. Box 1450, Alexandria, VA 22313-1450; or by telephone at (571) 272-2622.

JMstone
Jacqueline Stone
Director, Technology Center 1700/2900

UNITED STATES PATENT AND TRADEMARK OFFICE

Commissioner for Patents
United States Patent and Trademark Office
P.O. Box 1450
Alexandria, VA 22313-1450
www.uspto.gov

PHILIPS INTELLECTUAL PROPERTY
& STANDARDS
P.O. BOX 3001
BRIARCLIFF MANOR NY 10510

COPY MAILED

SEP 15 2006

OFFICE OF PETITIONS

In re Application of

Kang, et al. :

ON PETITION

Application No. 29/202,774

Filing Date: April 5, 2004

Attorney Docket No. PHND04807 :

This is a decision on the petition under 37 CFR §1.137(b), filed August 17, 2006, in the above-identified application.

The petition is **dismissed**.

Any request for reconsideration of this decision must be submitted within TWO (2) MONTHS from the mail date of this decision. Extensions of time under 37 CFR 1.136(a) are permitted. The reconsideration request should include a cover letter entitled "Renewed Petition" under 37 CFR 1.137(b)."

This application became abandoned for failure to respond in a timely manner to the Corrected Notice of Allowance and Issue Fee Due mailed June 23, 2005. The notice allowed a statutory period for reply of three months from its mailing date. No reply was received within the allowable period, and the application became abandoned on September 24, 2005. A Notice of Abandonment was mailed on May 31, 2006.

Effective December 1, 1997, the provisions of 37 CFR 1.137(b) now provide that where the delay in reply was unintentional, a petition may be filed to revive an abandoned application or a lapsed patent pursuant to 37 CFR 1.137(b). A grantable petition pursuant to 37 CFR 1.137(b) must be accompanied by:

(1) the required reply, unless previously filed. In a non-provisional application abandoned for failure to prosecute, the required reply may be met by the filing of a continuing application. In an application or patent, abandoned or lapsed for failure to pay the issue fee, or any portion thereof, the required reply must be the payment of the issue fee or any outstanding balance thereof.

(2) the petition fee as set forth in 37 CFR 1.17(m);

(3) a statement that the entire delay in filing the required reply from the due date for the reply until the filing of a grantable petition pursuant to 37 CFR 1.137(b) was unintentional. The Commissioner may require additional information where there is a question whether the delay was unintentional; and

(4) any terminal disclaimer (and fee set forth in 37 CFR 1.20(d)) required pursuant to 37 CFR 1.137(d).

The instant petition does not satisfy the requirements of item (4) above.

As to item (4), the terminal disclaimer was not found with the petition papers. The subject application is a design application, therefore; a terminal disclaimer is required in order to revive the application. Any renewed petition filed must be accompanied by the completed terminal disclaimer form, which is enclosed for petitioner's convenience. Pursuant to 37 CFR 1.137(d), the terminal disclaimer must dedicate to the public a terminal part of the term of any patent granted from this application that is equivalent to the period of abandonment of the application.

It is not apparent whether the person signing the statement of unintentional delay was in a position to have firsthand or direct knowledge of the facts and circumstances of the delay at issue. Nevertheless, such statement is being treated as having been made as the result of a reasonable inquiry into the facts and circumstances of such delay. See 37 CFR 10.18(b) and Changes to Patent Practice and Procedure; Final Rule Notice, 62 Fed. Reg. 53131, 53178 (October 10, 1997), 1203 Off. Gaz. Pat. Office 63, 103 (October 21, 1997). In the event that such an inquiry has not been made, petitioner must make such an inquiry. If such inquiry results in the discovery that it is not correct that the entire delay in filing the required reply from the due date for the reply until the filing of a grantable petition pursuant to 37 CFR 1.137(b) was unintentional, petitioner must notify the Office.

There is no indication that the person signing the instant petition was ever given a power of attorney or authorization of agent to prosecute the above-identified application. If the person signing the instant petition desires to receive future correspondence regarding this application, the appropriate power of attorney or authorization of agent must be submitted. While a courtesy copy of this decision is being mailed to the person signing the instant petition, all future correspondence will be directed to the address of currently of record until such time as appropriate instructions are received to the contrary.

Further correspondence with respect to this matter should be addressed as follows:

By mail: Mail Stop Petitions
Commissioner for Patents
United States Patent and Trademark Office
Box 1450
Alexandria, VA 22313-1450

By facsimile: (571) 273-8300

Telephone inquiries concerning this matter may be directed to the undersigned at (571) 272-3222.

Kenya A. McLaughlin
Petitions Attorney
Office of Petitions

Enclosure: "Terminal Disclaimer to Accompany Petition"

cc:

Edward W. Goodman
345 Scarborough Road
Briarcliff, NY 10510

UNITED STATES PATENT AND TRADEMARK OFFICE

Commissioner for Patents
United States Patent and Trademark Office
P.O. Box 1450
Alexandria, VA 22313-1450
www.uspto.gov

PHILIPS INTELLECTUAL
PROPERTY & STANDARDS
P.O. BOX 3001
BRIARCLIFF MANOR, NY 10510

COPY MAILED
NOV 06 2006
OFFICE OF PETITIONS

In re Application of

Kang, et al.

Application No. 29/202,774

Filed: April 5, 2004

Attorney Docket No. PHND04807

DECISION ON PETITION

This is a decision on the renewed petition under 37 CFR 1.137(b), filed October 3, 2006, 2006, to revive the above-identified application.

The renewed petition under 37 CFR 1.137(b) is **GRANTED**.

This application became abandoned for failure to respond in a timely manner to the Corrected Notice of Allowance and Issue Fee Due mailed June 23, 2005. The notice allowed a statutory period for reply of three months from its mailing date. No reply was received within the allowable period, and the application became abandoned on September 24, 2005. A Notice of Abandonment was mailed on May 31, 2006. A petition under 37 CFR 1.137(b) was filed on August 17, 2006, and dismissed by a decision mailed September 15, 2006.

The terminal disclaimer, filed October 3, 2006, is noted. Deposit account 14-1270 will be charged $130.00 for the terminal disclaimer fee.

The application is being forwarded to the Office of Patent Publications for further processing.

Telephone inquiries concerning this decision should be directed to the undersigned at (571) 272-3222.

Kenya A. McLaughlin
Petitions Attorney
Office of Petitions

Enclosures: "Notice o Acceptance of Power of Attorney"
"Notice Regarding Change of Power of Attorney"

UNITED STATES PATENT AND TRADEMARK OFFICE

Commissioner for Patents
United States Patent and Trademark Office
P.O. Box 1450
Alexandria, VA 22313-1450
www.uspto.gov

JUN 2 1 2004

BANNER & WITCOFF
1001 G STREET N W
SUITE 1100
WASHINGTON DC 20001

In re Application of	:	
Ben Sy Yun	:	
Serial No.: 29/202,787	:	DECISION ON PETITION
Filed: April 6, 2004	:	
For: Portion Of A Shoe Upper	:	

This is in response to the petition applicant filed on April 6, 2004 to make the above-identified application special under the provisions of 37 CFR 1.102(d).

Applicant has satisfied the provisions set forth in M.P.E.P. 708.02, VIII, thus the petition is **GRANTED**.

The application will be forwarded to the examiner for action on the merits commensurate with this decision.

Should there be any questions with regard to this letter please contact John Kittle by letter addressed to the Director, Technology Center 3700/2900, P.O. Box 1450 Alexandria, VA 22313-1450, or by telephone at (703) 308-0873 or by facsimile transmission at (703) 308-3139.

John E. Kittle
Director
Technology Center 3700/2900

UNITED STATES PATENT AND TRADEMARK OFFICE

Commissioner for Patents
United States Patent and Trademark Office
P.O. Box 1450
Alexandria, VA 22313-1450
www.uspto.gov

CHAN LAW GROUP LC
1055 W. 7TH STREET
SUITE 1880
LOS ANGELES, CA 90017

8/4/05

In re Application of
Wen Chung Lin
Serial No.: 29/202,800
Filed: April 5, 2004
Attorney Docket No.: 901.702

: PETITION DECISION

This is a decision on applicant's petition to revive patent application under 37 CFR 1.137(b), received March 7, 2005, to revive an unintentionally abandoned application.

This application became abandoned for failure to respond to the Notice of Allowance mailed September 21, 2004, which set a three-month statutory period to submit the Issue Fee and formal drawings. The Issue fee was received October 12, 2004; however, as no formal drawings were submitted by December 21, 2004, a Notice of Abandonment was mailed February 18, 2005. Applicant then filed this petition.

A grantable petition for a design application under 37 CFR 1.137(b), as revised December 1, 1997, requires four items: (1) a petition and petition fee; (2) a complete response if not earlier made; (3) a statement that the entire period of delay in prosecution was unintentional; and (4) a terminal disclaimer and disclaimer fee. The requirement for a terminal disclaimer has been waived, as the petition was filed within one month of the mailing of the Notice of Abandonment.

Applicant's petition is **GRANTED**.

The application will be forwarded to Publication Division for printing as a patent in due course.

Should there be any questions with respect to this decision, please contact Sandra Morris; by mail addressed to: Director, Technology Center 1700/2900, P.O. Box 1450, Alexandria, VA 22313-1450; or by telephone at (571) 272-2622.

Jacqueline M. Stone

Jacqueline Stone
Director, Technology Center 1700/2900

SCANI **Please forward case and paper to address shown below.**

SPE RESPONSE FOR CERTIFICATE OF CORRECTION

Paper No.: _____

DATE : 8/21/07

TO SPE OF : ART UNIT 2911 Cathron Brooks (Spe)

SUBJECT : Request for Certificate of Correction for Appl. No.: 29/202800 Patent No.: D511220

Please respond to this request for a certificate of correction within 7 days.

Please review the requested changes/corrections as shown in the attached certificate of correction. Please complete this form (see below) and forward it with the file to:

Certificates of Correction Branch (CofC)
South Tower - 9A22
Palm Location 7580

HENRY RANDALL
Certificates of Correction Branch
703-308-9390 ext. _____

Thank You For Your Assistance

The request for issuing the above-identified correction(s) is hereby:

Note your decision on the appropriate box.

- [x] Approved — All changes apply.
- [ ] Approved in Part — Specify below which changes do not apply.
- [ ] Denied — State the reasons for denial below.

Comments: _____

IAN SIMMONS
SUPERVISORY PATENT EXAMINER
SPE

2916
Art Unit

UNITED STATES PATENT AND TRADEMARK OFFICE

COMMISSIONER FOR PATENTS
UNITED STATES PATENT AND TRADEMARK OFFICE
P.O. BOX 1450
ALEXANDRIA, VA 22313-1450
www.uspto.gov

THOMPSON COBURN, LLP
ONE US BANK PLAZA
SUITE 3500
ST LOUIS, MO 63101

COPY MAILED

JUN 15 2005

OFFICE OF PETITIONS

In re Application of :
Donald D. Foster, et al :
Application No. 29/202,810 : ON PETITION
Filed: April 5, 2004 :
Attorney Docket No. 66179-47151 :

This is a decision on the petition, filed June 9, 2005, under 37 CFR 1.313(c)(3) to withdraw the above-identified application from issue after payment of the issue fee.

The petition is **DISMISSED as moot**.

Unfortunately, the petition was not referred to the appropriate official for a decision until June 14, 2005, the date upon which the above-identified application issued as U.S. Design Patent No. D506,134.

The inconvenience caused petitioner in this matter is sincerely regretted. However, petitioner's attention is directed to 37 CFR 1.313(d) which states that "A petition under this section [37 CFR 1.313(c)] will not be effective to withdraw the application from issue unless it is actually received and granted by the appropriate officials **before the date of issue**." In this case, the petition was not received in the Office of Petitions for consideration until June 14, 2005.

While petitions to withdraw from issue may be mailed to the Commissioner of Patents, as was done in this case, applicants were cautioned to hand carry petitions to withdraw from issue directly to the Office of Petitions to allow sufficient time to process the petition. *(See Revised Procedures for Papers Requiring Immediate Attention (Hand-Carried and Facsimile Transmissions), 1279 Off. Gaz. Pat. Office 149 (Feb. 24, 2004); Revised Procedures for Papers Requiring Immediate Attention, 1280 Off. Gaz. Pat. Office 917 (March 23, 2004).*

The Express Abandonment has not been recognized. An application which has issued as a patent cannot be expressly abandoned.

Telephone inquiries concerning this matter may be directed to the undersigned at (571) 272-3204.

Sherry D. Brinkley
Petitions Examiner
Office of Petitions
Office of the Deputy Commissioner
for Patent Examination Policy

UNITED STATES PATENT AND TRADEMARK OFFICE

Commissioner for Patents
United States Patent and Trademark Office
P.O. Box 1450
Alexandria, VA 22313-1450
www.uspto.gov

PERRY SAIDMAN
SAIDMAN DESIGNLAW GROUP
SUITE 510
1110 BONIFANT STREET
SILVER SPRING, MD 20910

8/4/05

In re Application of
Alain Juneau
Serial No.: 29/202,836
Filed: April 6, 2004
Attorney Docket No.: 1688.012:D2

: PETITION DECISION

This is a decision on applicant's petition to revive patent application under 37 CFR 1.137(a), received April 15, 2005, to revive an unintentionally abandoned application.

A review of the file history shows that the Office mailed a Notice of Allowance to applicant on December 27, 2004, setting a three-month statutory period to pay the Issue fee. As no response was filed by March 28, 2005, the application was abandoned. This petition followed.

A petition under 37 CFR 1.137(a), as revised December 1, 1997, requires (1) a petition and petition fee of, (2) the proposed response or Issue Fee, (3) a terminal disclaimer and disclaimer fee in any design application, and (4) an adequate showing of the cause of unavoidable delay. The requirement for a terminal disclaimer has been waived, as the petition was filed before the mailing of the Notice of Abandonment.

Applicant has documented that the response was not filed timely, due to an error concerning confusion of the correct docket number of this case and a copending application. Applicant is advised that in the both applications, the dockets numbers 1688.012:D1 and 1688.012:D2 were both used in the originally filed papers. In the Declaration, applicant did not assign the "D1" or "D2" designation with neither this application nor 29/202,855. In this application, the claims page and transmittal letter listed the docket number as 1688.012:D1, and not D2; only the specification labeled the case as D2. In the copending application, the specification and claim pages had D1, and the transmittal page had D2. As this error, as shown by the copy of the docketing list, caused applicant to believe that the issue fee wasn't due until April 12, which is when the Issue fee was due for 29/202,855, this error caused an unintentional delay in payment of the Issue fee.

Applicant's petition under 37 CFR 1.137(a) is **GRANTED**.

The Terminal disclaimer fee of $65.00 will be refunded to applicant's credit card, as directed.

The application will be forwarded to Publications Branch to issue into a Patent in due course.

Should there be any questions with respect to this decision, please contact Sandra Morris; by mail addressed to: Director, Technology Center 1700/2900, P.O. Box 1450, Alexandria, VA 22313-1450; or by telephone at (571) 272-2622.

Jacqueline M. Stone

Jacqueline Stone
Director, Technology Center 1700/2900

UNITED STATES PATENT AND TRADEMARK OFFICE

Commissioner for Patents
United States Patent and Trademark Office
P.O. Box 1450
Alexandria, VA 22313-1450
www.uspto.gov

RABIN & BERDO, PC
1101 14TH STREET, NW
SUITE 500
WASHINGTON, DC 20005

COPY MAILED
NOV 06 2006
OFFICE OF PETITIONS

In re Patent No. D,498,713	:	
Issue Date: November 23, 2004	:	
Application No. 29/202,887	:	NOTICE
Filed: April 7, 2004	:	
Patentee(s): Yu-Te Chou	:	

This is a notice regarding your request for acceptance of a fee deficiency submission under 37 CFR 1.28, filed September 29, 2006. On September 1, 1998, the Court of Appeals for the Federal Circuit held that 37 CFR 1.28(c) is the sole provision governing the time for correction of the erroneous payment of the issue fee as a small entity. **See DH Technology v. Synergystex International, Inc. 154 F.3d 1333, 47 USPQ2d 1865 (Fed. Cir. Sept. 1, 1998).**

There is no indication that the person signing the instant petition was ever given a power of attorney or authorization of agent to prosecute the above-identified patent. In accordance with 37 CFR 1.34(a), the signature appearing on the petition shall constitute a representation to the United States Patent and Trademark Office that he/she is authorized to represent the particular party in whose behalf he/she acts.

Further, the Office no longer investigates or rejects original or reissue applications under 37 CFR 1.56. **1098 Off. Gaz. Pat. Office 502 (January 3, 1989).** Therefore, nothing in this Notice is intended to imply that an investigation was done.

Your fee deficiency submission under 37 CFR 1.28 is hereby **ACCEPTED**. Therefore, status as a small entity has been removed and all future fees paid must be paid at the large entity rate.

Inquiries related to this communication should be directed to the undersigned at (571) 272-3226.

Andrea Smith
Petitions Examiner
Office of Petitions

UNITED STATES PATENT AND TRADEMARK OFFICE

Commissioner for Patents
United States Patent and Trademark Office
P.O. Box 1450
Alexandria, VA 22313-1450
www.uspto.gov

BIRCH STEWART KOLASCH & BIRCH
PO BOX 747
FALLS CHURCH VA 22040-0747

COPY MAILED

DEC 1 8 2006

OFFICE OF PETITIONS

In re Patent No. D498,714	:	
Issue Date: November 23, 2004	:	
Application No.: 29/202,902	:	NOTICE
Filed: April 7, 2004	:	
Attorney Docket No.: TAIW 605-125	:	

This is a notice regarding your request for acceptance of a fee deficiency submission under 37 CFR 1.28, filed September 29, 2006.

On September 1, 1998, the Court of Appeals for the Federal Circuit held that 37 CFR 1.28(c) is the sole provision governing the time for correction of the erroneous payment of the issue fee as a small entity. See DH Technology v. Synergystex International, Inc. 154 F.3d 1333, 47 USPQ2d 1865 (Fed. Cir. Sept. 1, 1998).

The Office no longer investigates or rejects original or reissue applications under 37 CFR 1.56. 1098 Off. Gaz. Pat. Office 502 (January 3, 1989). Therefore, nothing in this Notice is intended to imply that an investigation was done.

Your fee deficiency submission under 37 CFR 1.28 is hereby **ACCEPTED**. The change of status to a large entity has been entered and made of record.

The application file does not indicate a change of address has been filed in this case, although the address given on the petition differs from the address of record. A courtesy copy of this decision is being mailed to the address noted on the petition. However, until otherwise instructed, all future correspondence regarding this patent will be mailed solely to the address of record.

This file is being forwarded to the Files Repository.

Telephone inquiries concerning this matter may be directed to the undersigned at (571) 272-3230.

Shirene Willis Brantley

Shirene Willis Brantley
Petitions Attorney
Office of Petitions

cc: RABIN AND BERDO PC
1101 14TH ST NW, STE 500
WASHINGTON, DC 20005

UNITED STATES PATENT AND TRADEMARK OFFICE

Commissioner for Patents
United States Patent and Trademark Office
P.O. Box 1450
Alexandria, VA 22313-1450
www.uspto.gov

BANNER & WITCOFF
1001 G STREET N W
SUITE 1100
WASHINGTON, DC 20001

COPY MAILED

MAR 2 1 2005

OFFICE OF PETITIONS

In re Application of
Kuerbis et al.
Application No. 29/202,907
Filed: April 7, 2004
Attorney Docket No. 015127.00289
For: Shoe

DECISION ACCORDING
STATUS UNDER 37 CFR 1.47(a)

This is a decision on the petition under 37 CFR 1.47(a), filed November 30, 2004.

The petition is **granted**.

The above-identified application and papers have been reviewed and found in compliance with 37 CFR 1.47(a). This application is hereby accorded Rule 1.47(a) status.

Effective November 1, 2004, the fee for a petition under 37 CFR 1.47 was raised to $200.[1] Therefore, upon receipt of the petition, $200 rather than $130 was charged to petitioner's deposit account for the petition.

As provided in Rule 1.47(c), this Office will forward notice of this application's filing to the non-signing inventor at the address given in the petition. Notice of the filing of this application will also be published in the Official Gazette.

The Office of Initial Patent Examination will be informed of the instant decision.

Telephone inquiries concerning this decision should be directed to Petitions Attorney Steven Brantley at (571) 272-3203.

Charles Steven Brantley
Petitions Attorney
Office of Petitions

[1] See Revision of Patent Fees for Fiscal Year 2005, 69 Fed. Reg. 52604 (Aug. 27, 2004) and Changes to Support Implementation of the United States Patent and Trademark Office 21st Century Strategic Plan, 1287 Off. Gaz. Pat. Office 67 (Oct. 12, 2004).

UNITED STATES PATENT AND TRADEMARK OFFICE

Commissioner for Patents
United States Patent and Trademark Office
P.O. Box 1450
Alexandria, VA 22313-1450
www.uspto.gov

Mr. Marc A. Newson
5 Vernon Mansions
Queens Club Gardens
London W14 9TQ
ENGLAND

COPY MAILED

MAR 2 1 2005

OFFICE OF PETITIONS
Letter

In re Application of
Kuerbis et al.
Application No. 29/202,907
Filed: April 7, 2004
Attorney Docket No. 015127.00289
For: Shoe

Mr. Newson:

You are named as a joint inventor in the above identified United States patent application.

Should a patent be granted on the application you will be designated therein as a joint inventor.

As a named inventor you, or a registered patent attorney or agent on your behalf, have the right to obtain copies of any papers which are part of the file wrapper. Information regarding how to pay for and order a copy of the application, or a specific paper in the application, should be directed to Certification Division at (703)308-9726 or 1(800)972-6382 (outside the Washington D.C. area).

General requests for information regarding the application should be directed to the File Information Unit at (703)308-2733.

Telephone inquiries regarding this communication may be directed to Petitions Attorney Steven Brantley at (571) 272-3203.

Charles Steven Brantley
Petitions Attorney
Office of Petitions

cc: BANNER & WITCOFF
1001 G STREET N W
SUITE 1100
WASHINGTON, DC 20001

UNITED STATES PATENT AND TRADEMARK OFFICE

COMMISSIONER FOR PATENTS
UNITED STATES PATENT AND TRADEMARK OFFICE
P.O. BOX 1450
ALEXANDRIA, VA 22313-1450
WWW.USPTO.GOV

Paper No. None

BOYLE FREDRICKSON NEWHOLM STEIN & GRATZ, S.C.
250 E. WISCONSIN AVENUE
SUITE 1030
MILWAUKEE WI 53202

COPY MAILED

FEB 21 2007

OFFICE OF PETITIONS

In re Application of	:	
Helmut Jost et al.	:	
Application No. 29/202,910	:	DECISION ON PETITION
Filed: April 7, 2004	:	UNDER 37 C.F.R. §1.137(B)
Attorney Docket No.: 1077.001	:	
Title: COMBINED FORK AND RAKE	:	

This is a decision on the petition filed November 16, 2006, pursuant to 37 C.F.R. §1.137(b)[1], to revive the above-identified application.

The above-identified application became abandoned for failure to submit the issue fee and drawings in a timely manner in reply to the Notice of Allowance and Issue Fee Due, mailed August 11, 2006, which set a shortened statutory period for reply of three months. A response was received on November 14, 2006 (November 11, 2006 fell on a Sunday), however no extensions of time are

1 A grantable petition pursuant to 37 C.F.R §1.137(b) must be accompanied by:
(1) The reply required to the outstanding Office action or notice, unless previously filed;
(2) The petition fee as set forth in § 1.17(m);
(3) A statement that the entire delay in filing the required reply from the due date for the reply until the filing of a grantable petition pursuant to this paragraph was unintentional. The Commissioner may require additional information where there is a question whether the delay was unintentional, and;
(4) Any terminal disclaimer (and fee as set forth in § 1.20(d)) required pursuant to paragraph (d) of this section.

permitted for transmitting formal drawings or issue fees[2]. Accordingly, the above-identified application became abandoned on November 12, 2006.

With the present petition, the petition fee and the proper statement of unintentional delay have been submitted. The issue fee and formal drawings were previously received on November 14, 2006. No terminal disclaimer is required.

As such, the petition under 37 C.F.R. §1.137(b) is **GRANTED**.

The Office of Patent Publication will be notified of this decision so that the present application can be processed into a patent.

Telephone inquiries regarding *this decision* should be directed to the undersigned at (571) 272-3225[3]. All other inquiries concerning the status of the application should be directed to the Office of Patent Publication at 571-272-4200.

Paul Shanoski
Senior Attorney
Office of Petitions
United States Patent and Trademark Office

---

2 See MPEP §710.02(e).
3 Petitioner's representative will note that all practice before the Office should be in writing, and the action of the Office will be based exclusively on the written record in the Office. See 37 C.F.R. §1.2. As such, Petitioner's representative is reminded that no telephone discussion may be controlling or considered authority for any further action(s) of Petitioner's representative.

UNITED STATES PATENT AND TRADEMARK OFFICE

Commissioner for Patents
United States Patent and Trademark Office
P.O. Box 1450
Alexandria, VA 22313-1450
www.uspto.gov

MCDERMOTT WILL & EMERY LLP
227 WEST MONROE STREET
CHICAGO IL 60606-5096

COPY MAILED

MAR 0 5 2007

OFFICE OF PETITIONS

In re Application of	:	
Lasch, et al.	:	
Application No. 29/202,931	:	ON PETITION
Filed: April 7, 2004	:	
Attorney Docket No. 37355-246	:	

This is a decision on the petition to withdraw the holding of abandonment under 37 CFR 1.181, filed January 5, 2007.

The petition under 37 CFR 1.181 is **GRANTED**.

The holding of abandonment is **WITHDRAWN**.

The above-identified application was held abandoned for failure to timely file a response to the Notice to File Missing Parts mailed June 3, 2004. This Office action set a shortened period for reply of two (2) months. No reply having been received, the application became abandoned on August 4, 2004. A Notice of Abandonment was mailed on February 22, 2005.

A review of the file reveals that the Notice to File Missing Parts, for reasons not apparent, was returned to the Office as undeliverable on June 14, 2004. The action was addressed to the proper address of record.

The matter is being forwarded to the Office of Initial Patent Examination for pre-examination processing, using the declaration filed January 5, 2007.

Telephone inquiries related to this decision should be directed to the undersigned at (571)272-3207.

Cliff Congo
Petitions Attorney
Office of Petitions

UNITED STATES PATENT AND TRADEMARK OFFICE

Commissioner for Patents
United States Patent and Trademark Office
P.O. Box 1450
Alexandria, VA 22313-1450
www.uspto.gov

AMERICAN EXPRESS
TRAVEL RELATED SERVICES CO., INC.
c/o SNELL & WILMER, L.L.P.
ONE ARIZONA CENTER
400 E. VAN BUREN STREET
PHOENIX AZ 85004-2202

COPY MAILED

MAR 13 2008

In re Application of	:	
Lasch, et al.	:	
Application No. 29/202,942	:	DECISION
Filed: 7 April, 2004	:	
Attorney Docket No. 37355-245	:	

This is a decision on the petition filed on 5 January, 2007, and considered as a request to withdraw the holding of abandonment under 37 C.F.R. §1.181.

The Office regrets the delay in addressing this matter, however, the petition was presented to the attorneys in the Office of Petitions only at this writing.

The petition as considered under 37 C.F.R. §1.181 is **DISMISSED**.

NOTES: Any petition (and fee) for reconsideration of this decision must be submitted within two (2) months from the mail date of this decision. Extensions of time under 37 C.F.R. §1.136(a) are permitted. The reconsideration request should include a cover letter entitled "Renewed Petition under 37 C.F.R. §1.181" and/or "Renewed Petition under 37 C.F.R. §1.137(b)."

BACKGROUND

The record reflects that:

- Petitioner (former Counsel) failed to reply timely and properly to the Notice to File Missing Parts (oath/declaration and surcharge) action mailed on 3 June, 2004, with reply due on or before 3 August, 2004;

- though properly addressed as Petitioner had directed in the application transmittal ("Patrick D. Richards, 227 West Monroe, Chicago, IL 60606"), the Notice of Missing Parts was returned to the Office by the U.S. Postal Service (USPS) as undelivered on 18 June, 2004;

- the application went abandoned after midnight 3 August, 2004;

- the Office mailed the Notice of Abandonment on 22 February, 2005;

- though properly addressed as Petitioner had directed in the application transmittal, the Notice of Missing Parts was returned to the Office by the USPS as undelivered on 19 April, 2005;

- on 24 October, 2006, Petitioner filed a Notice of Change of Address correlated to what was averred to have been his Customer Number, but made no inquiry as to the instant application;

- on 5 January, 2007, Petitioner filed the instant two-page petition, with but four pages of copied documents in the form of the envelope and three pages of the filing receipt mailed to Petitioner but returned to the Office by the USPS—and Petitioner avers events but with no support for the delay between the filing date of the application (7 April, 2004) and the date on which Petitioner avers he had his paralegal first contact the Office (23 October, 2006.; and apparently there was another two-plus month delay before Petitioner filed the instant petition.

Indeed, two or more mailings from the Office to Petitioner were returned as undelivered. However, it is noted that the mailings were addressed by the Office as instructed by Petitioner and that the address of 227 West Monroe is that of an office building/tower. Although Petitioner's office is located in that building/tower, the Customer Number associated with Notice of Change of Address and with Petitioner's office specifies the firm as McDermott Will & Emery LLP, located at Suite 4400. That information detail, which Petitioner appears to have omitted from the Correspondence information on the application transmittal most certainly is the kind of detail which would differentiate between correspondence that is or is not delivered by the USPS to one located at a busy urban office building/tower.

Petitioner's failure to provide accurate and complete correspondence information is not an error of the Office, or of the USPS.

Moreover, particularly in light of the extended delay herein and in the absence of chronological and event detail and specifics—such as but not limited to a showing of the basis for the delay in the dates of contacts by Office personnel to/with Petitioner staff and/or Petitioner's staff contact with/to the Office and Petitioner's client—it is not possible to support an averment for withdrawal of the holding of abandonment.

Moreover, it is noted that new Counsel may have been appointed, and in light of that, the extended period of delay in this matter, and of the requirement that Counsel expressly state/demonstrate that he/she has made investigation of the details of the delay and make the showing that is described below as to "extended delay," with supporting statement(s) by the applicant or assignee (with supporting certificate under 37 C.F.R. §3.73(b)).

The regulations at 37 C.F.R. §1.181(f) indicate that "[a]ny petition under this part not filed within two months of the mailing date of the action or notice from which relief is requested may be dismissed as untimely, except as otherwise provided. This two-month period is not extendable."

The availability of applications and application papers online to applicants/practitioners who diligently associate their Customer Number with the respective application(s) now provides an applicant/practitioner on-demand information as to events/transactions in an application.

Out of an abundance of caution, Petitioners always are reminded that the filing of a petition under 37 C.F.R. §1.181 does not toll any periods that may be running any action by the Office and a petition seeking relief under the regulation must be filed within two (2) months of the act complained of (see: 37 C.F.R. §1.181(f)), and that those registered to practice and all others who make representations before the Office are reminded to inquire into the underlying facts of representations made to the Office and support averments with the appropriate documentation– since all owe to the Office the continuing duty to disclose.[1]

STATUTES, REGULATIONS AND ANALYSIS

Congress has authorized the Commissioner to "revive an application if the delay is shown to the satisfaction of the Commissioner to have been "unavoidable." 35 U.S.C. §133 (1994).[2]

The regulations at 37 C.F.R. §1.137(a) and (b) set forth the requirements for a petitioner to revive a previously unavoidably or unintentionally, respectively, abandoned application under this congressional grant of authority.

---

[1] See supplement of 17 June, 1999. The Patent and Trademark Office is relying on petitioner's duty of candor and good faith and accepting a statement made by Petitioner. See Changes to Patent Practice and Procedure, 62 Fed. Reg. at 53160 and 53178, 1203 Off. Gaz. Pat. Office at 88 and 103 (responses to comments 64 and 109)(applicant obligated under 37 C.F.R. §10.18 to inquire into the underlying facts and circumstances when providing statements to the Patent and Trademark Office).

[2] 35 U.S.C. §133 provides:

35 U.S.C. §133 Time for prosecuting application.

Upon failure of the applicant to prosecute the application within six months after any action therein, of which notice has been given or mailed to the applicant, or within such shorter time, not less than thirty days, as fixed by the Commissioner in such action, the application shall be regarded as abandoned by the parties thereto, unless it be shown to the satisfaction of the Commissioner that such delay was unavoidable.

The language of 35 U.S.C. §133 and 37 C.F.R. §1.137(a) is clear, unambiguous, and without qualification: the delay in tendering the reply to the outstanding Office action, as well as filing the first petition seeking revival, must have been unavoidable for the reply now to be accepted on petition.[4]

Delays in responding properly raise the question whether delays are unavoidable.[3] Where there is a question whether the delay was unavoidable, Petitioners must meet the burden of establishing that the delay was unavoidable within the meaning of 35 U.S.C. §133 and 37 C.F.R. §1.137(a).[4]

And the Petitioner must be diligent in attending to the matter.[5] Failure to do so does not constitute the care required under Pratt, and so cannot satisfy the test for diligence and due care.

(By contrast, unintentional delays are those that do not satisfy the very strict statutory and regulatory requirements of unavoidable delay, and also, by definition, are not intentional.[6]))

While the instant petition was not filed under the provisions of 37 C.F.R. §1.137(b) to revive the application, it appears that a petition under the regulation may be required herein, and new Counsel should be aware of the burdens that are associated with the petition in light of the extended period of delay herein.

As to Extended Delay

There are three periods to be considered during the evaluation of a petition in this context:

(1) the delay in reply that originally resulted in the abandonment;

(2) the delay in filing an initial petition to return the application to pending status; and

(3) the delay in filing a grantable petition pursuant to 37 C.F.R. §1.137(b) to revive the application.

Currently, the delay has not been shown to the satisfaction of the Director to be unintentional for periods (1) and (2).

---

[3] See: *Changes to Patent Practice and Procedure*; *Final Rule Notice*, 62 *Fed. Reg.* at 53158-59 (October 10, 1997), 1203 *Off. Gaz. Pat. Office* at 86-87 (October 21, 1997).

[4] See: In re Application of G, 11 USPQ2d 1378, 1380 (Comm'r Pats. 1989).

[5] See: Diligence in Filing Petitions to Revive and Petitions to Withdraw the Holding of Abandonment, 1124 Off. Gaz. Pat. Office 33 (March 19, 1991). It was and is Petitioner's burden to exercise diligence in seeking either to have the holding of abandonment withdrawn or the application revived. See 1124 Off. Gaz. Pat. Office supra.

[6] Therefore, by example, an unintentional delay in the reply might occur if the reply and transmittal form are to be prepared for shipment by the US Postal Service, but other pressing matters distract one's attention and the mail is not timely deposited for shipment.

The issue is not whether some of the delay was unintentional by any party; rather, the issue is whether the entire delay has been shown to the satisfaction of the Director to be unintentional. The relevant inquiry in determining whether a delay is intentional is whether the course of action resulting in the delay was, as here, deliberate.[7] A deliberate decision not to pursue further prosecution warrants the conclusion that the abandonment of this application was not unintentional.[8] If the delay results from a deliberate cause of action (or inaction), it cannot be considered unintentional delay.[9]

The question under 37 C.F.R. §1.137(b) is whether the delay on the part of the party having the right or authority to reply to avoid abandonment (or not reply) was unintentional. When the issue of revival is addressed, the focus must be on the rights and responsibilities of the parties as of the time of abandonment.[10]

As the courts have made clear, it is pointless for the Office to revive an abandoned—much less an intentionally abandoned—application without an adequate showing that the delay did not result from a deliberate course of action.[11]

Accordingly, if the delay in filing a reply to the final Office action stems from Counsel or Applicant's or the Assignee's deliberate course of action—to withhold a reply to the final Office action such that the application would go abandoned—then revival will be precluded.

The regulations at 37 C.F.R. §1.137(b) as amended, effective 1 December,1997, require, *inter alia*, that the entire delay was unintentional, but do not include a filing period requirement. Thus, the inquiry must be whether the delay in filing the first petition herein was not "unintentional" within the meaning of 35 USC §41(a)(7) and 37 C.F.R. §1.137(b), but rather the result of a decision on the part of Petitioner to delay the revival of the above-identified application.

As to Period (1):

The patent statute at 35 U.S.C. §41(a)(7) authorizes the Director to revive an "unintentionally abandoned application." The legislative history of Public Law 97-247 reveals that the purpose of 35 U.S.C. §41(a)(7) is to permit the Office to have more discretion than in 35 U.S.C. §§133 or 151 to revive abandoned applications in appropriate circumstances, but places a limit on this discretion, stating that: "[u]nder this section a petition accompanied by either a fee of $500 or a

---

[7] See In re Maldague, 10 USPQ2d 1477 (Comm'r Pat. 1988); In re Application of G, 11 USPQ2d 1378 (Comm'r Pat. 1989); Lawman Armor v. Simon, 2005 U.S. Dist. LEXIS 10843, 74 USPQ2d 1633 (E.D. Mich. 2005); Field Hybrids, LLC v. Toyota Motor Corp., 2005 U.S. Dist. LEXIS 1159 (D. Minn. Jan. 27, 2005).

[8] See Lawman, supra.

[9] Maldague, supra; G, supra; Lawman, supra; Field Hybrids, supra.

[10] See Kim v. Quigg, 781 F. Supp. 1280, 1284, 12 USPQ2d 1604, 1607 (E.D. Va. 1989).

[11] Maldague, supra; G, supra; Lawman, supra; Field Hybrids, supra; New York University v. Autodesk, 466 F. Supp.2d 563, 2006 U.S. Dist. LEXIS 93105 (S.D.N.Y. 2006)(same); Lumenyte Int'l Corp. v. Cable Lite Corp., Nos. 96-1011, 96-1077, 1996 U.S. App. LEXIS 16400, 1996 WL 383927 (Fed. Cir. July 9, 1996)(unpublished)(patent held unenforceable due to a finding of inequitable conduct in submitting an inappropriate statement that the abandonment was unintentional); Aristocrat Technologies v. International Game Technology, 2007 U.S. Dist. LEXIS 42854 (N.D. Ca. 2007)(USPTO misapplication of the standards of revival overturned causing patent invalidation).

fee of $50 would not be granted where the abandonment or the failure to pay the fee for issuing the patent was intentional as opposed to being unintentional or unavoidable."[12] [Emphasis supplied].

The revival of an intentionally abandoned application is antithetical to the meaning and intent of the statute and regulation.

35 U.S.C. §41(a)(7) authorizes the Director to accept a petition "for the revival of an unintentionally abandoned application for a patent." As amended December 1, 1997, 37 C.F.R. §1.137(b)(§3) provides that a petition under 37 C.F.R. §1.137(b) must be accompanied by a statement that the delay was unintentional, but provides that "[t]he Commissioner may require additional information where there is a question whether the delay was unintentional."

Where, as here, there is a question whether the initial delay was unintentional, the petitioner must meet the burden of establishing that the delay was unintentional within the meaning of 35 U.S.C. §41(a)(7) and 37 C.F.R. §1.137(b).[13] Here, in view of the inordinate delay seeking to resume prosecution, there is a question whether the entire delay was unintentional. Petitioner should note that the issue is not whether some of the delay was unintentional by any party; rather, the issue is whether the entire delay has been shown to the satisfaction of the Director to be unintentional.

The question under 37 C.F.R. §1.137(b) for period (1) is whether the delay on the part of the party having the right or authority to reply to avoid abandonment (or not reply) was unintentional. Accordingly, any renewed petition must clearly identify the party having the right to reply to avoid abandonment.

That party, in turn must explain what effort(s) was made to further reply to the outstanding Office action and, further, why no reply was filed. If no effort was made to further reply, then that party must explain why the delay in this application does not result from a deliberate course of action (or inaction).

Likewise, then-Counsel of Record at the time of abandonment, must explain why this application became abandoned while it was under their control and what efforts were made to further reply of itself and with whom this matter was discussed.

Copies of any correspondence relating to the filing, or to not filing a further reply to the outstanding Office action are required from responsible person(s), and whoever else was involved with this application at the time of abandonment.

Statements are required from any and all persons then the responsible person(s) having firsthand knowledge of the circumstances surrounding the lack of a reply to the outstanding Office action.

---

[12] See H.R. Rep. No. 542, 97th Cong., 2d Sess. 6-7 (1982), *reprinted in* 1982 U.S.C.C.A.N. 770-71.

[13] See: In re Application of G, 11 USPQ2d 1378, 1380 (Comm'r Pats. 1989).

As the courts have made clear, it is pointless for the USPTO to revive a long abandoned application without an adequate showing that the delay did not result from a deliberate course of action.[14]

As to Period (2):

Likewise, where the applicant deliberately chooses not to seek or persist in seeking the revival of an abandoned application, or where the applicant deliberately chooses to delay seeking the revival of an abandoned application, the resulting delay in seeking revival of the abandoned application cannot be considered as "unintentional" within the meaning of 37 C.F.R. §1.137(b).[15] The language of both 35 U.S.C. §41(a)(7) and 37 C.F.R. §1.137(b) are clear and unambiguous, and, furthermore, without qualification. That is, the delay in filing the reply during prosecution, as well as in filing the petition seeking revival, must have been, without qualification, "unintentional" for the reply to now be accepted on petition.

The Office requires that the entire delay be at least unintentional as a prerequisite to revival of an abandoned application to prevent abuse and injury to the public.[16] The December 1997 change to 37 C.F.R. §1.137 did not create any new right to overcome an intentional delay in seeking revival, or in renewing an attempt at seeking revival, of an abandoned application[17]. As the courts have since made clear, a protracted delay in seeking revival, as here, requires a petitioner's detailed explanation seeking to excuse the delay as opposed to USPTO acceptance of a general allegation of unintentional delay.[18]

Statements are required from any and all persons then the responsible person(s) having firsthand knowledge of the circumstances surrounding the protracted delay, after the abandonment date, in seeking revival.

As noted in MPEP §711.03(c)(II), subsection D, in instances in which such petition was not filed within 1 year of the date of abandonment of the application, applicants should include:

> (A) the date that the applicant first became aware of the abandonment of the application; and

---

[14] See: Lawman Armor v. Simon, 2005 U.S. Dist. LEXIS 10843, 74 USPQ2d 1633 (DC EMich 2005); Field Hybrids, LLC v. Toyota Motor Corp., 2005 U.S. Dist. LEXIS 1159 (D. Minn Jan. 27, 2005); Lumenyte Int'l Corp. v. Cable Lite Corp., Nos. 96-1011, 96-1077, 1996 U.S. App. LEXIS 16400, 1996 WL 383927 (Fed. Cir. July 9, 1996) (unpublished) (patents held unenforceable due to a finding of inequitable conduct in submitting an inappropriate statement that the abandonment was unintentional).

[15] See: MPEP 711.03(c).

[16] See: H.R. Rep. No. 542, 97th Cong., 2d Sess. 7 (1982), reprinted in 1982 U.S.C.C.A.N. 771 ("[i]n order to prevent abuse and injury to the public the Commissioner . . . could require applicants to act promptly after becoming aware of the abandonment").

[17] See: Changes to Patent Practice and Procedure; Final Rule Notice, 62 Fed. Reg. 53131, 53160 (October 10, 1997), 1203 Off. Gaz. Pat. Office 63, 87 (October 21, 1997), which clearly stated that any protracted delay (here, over years) could trigger, as here, a request for additional information.

[18] See: Lawman Armor v. Simon, 2005 U.S. Dist. LEXIS 10843, 74 USPQ2d 1633, at 1637-8 (DC EMich 2005); Field Hybrids, LLC v. Toyota Motor Corp., 2005 U.S. Dist. LEXIS 1159 (D. Minn Jan. 27, 2005) at *21-*23.

(B) a showing as to how the delay in discovering the abandoned status of the application occurred despite the exercise of due care or diligence on the part of the applicant.

In either instance, applicant's failure to carry the burden of proof to establish that the "entire" delay was "unavoidable" or "unintentional" may lead to the denial of a petition under 37 C.F.R. §1.137(b), regardless of the circumstances that originally resulted in the abandonment of the application.[19]

Allegations as to the Request to
Withdraw the Holding of Abandonment

The courts have determined the construct for properly supporting a petition seeking withdrawal of a holding of abandonment.[20] (See, also, the commentary at MPEP §711.03(c)(I)(A) and (B).)

And the regulation requires that relief be sought within two (2) months of the act complained of.

As noted above and particularly in light of the fact that several consecutive mailings seem not to have been delivered to Petitioner although those mailings were properly addressed by the Office, Petitioner appears to have failed to have made the required submission of documentary evidence in support of the petition (as discussed in the BACKGROUND, above), and Petitioner also appears not to have filed timely under the regulation.

CONCLUSION

Petitioner appears not to have satisfied the burdens herein, and the petition as considered under 37 C.F.R. §1.181 is **dismissed**.

ALTERNATIVE VENUE

Petitioner may wish to properly file a petition to the Commissioner requesting revival of an application abandoned due to unintentional delay under 37 C.F.R. §1.137(b). (See: http://www.uspto.gov/web/offices/pac/mpep/documents/0700_711_03_c.htm#sect711.03c)

A petition to revive on the grounds of unintentional delay must be filed promptly and such petition must be accompanied by the reply, the petition fee, a terminal disclaimer and fee where appropriate and a statement that "the entire delay in filing the required reply from the due date for the reply until the filing of a grantable petition was unintentional." (The statement is in the form available online.)

---

[19] See: New York University v. Autodesk, 2007 U.S. DIST LEXIS, U.S.District LEXIS 50832, *10 -*12 (S.D.N.Y. 2007)(protracted delay in seeking revival undercuts assertion of unintentional delay).

[20] See: Delgar v. Schulyer, 172 USPQ 513 (D.D.C. 1971).

Further correspondence with respect to this matter should be addressed as follows:

By mail: Commissioner for Patents
P.O. Box 1450
Alexandria, VA 22313-1450

By FAX: IFW Formal Filings
(571) 273-8300
ATTN.: Office of Petitions

By hand: Mail Stop: Petition
Customer Service Window
Randolph Building
401 Dulany Street
Alexandria, VA 22314

While telephone inquiries regarding this decision may be directed to the undersigned at (571) 272-3214, it is noted that all practice before the Office is in writing (see: 37 C.F.R. §1.2[21]) and the proper authority for action on any matter in this regard are the statutes (35 U.S.C.), regulations (37 C.F.R.) and the commentary on policy (MPEP). Therefore, no telephone discussion may be controlling or considered authority for Petitioner's action(s).

John J. Gillon, Jr.
Senior Attorney
Office of Petitions

[21] The regulations at 37 C.F.R. §1.2 provide:
§1.2 Business to be transacted in writing.
All business with the Patent and Trademark Office should be transacted in writing. The personal attendance of applicants or their attorneys or agents at the Patent and Trademark Office is unnecessary. The action of the Patent and Trademark Office will be based exclusively on the written record in the Office. No attention will be paid to any alleged oral promise, stipulation, or understanding in relation to which there is disagreement or doubt.

UNITED STATES PATENT AND TRADEMARK OFFICE

Commissioner for Patents
United States Patent and Trademark Office
P.O. Box 1450
Alexandria, VA 22313-1450
www.uspto.gov

SNELL & WILMER L.L.P. (AMEX)
ONE ARIZONA CENTER
400 E. VAN BUREN STREET
PHOENIX AZ 85004-2202

COPY MAILED

NOV 18 2008

OFFICE OF PETITIONS

In re Application of :
Lasch, et al. :
Application No. 29/202,942 : DECISION
Filed: 7 April, 2004 :
Attorney Docket No.: 90655.0700 :

This is a decision on the petition filed on 8 May, 2008, considered as a petition under 37 C.F.R. §1.137(b) to revive the application as having been abandoned due to unintentional delay.

The petition under 37 C.F.R. §1.137(b) is **GRANTED**.

As to Allegations of
Unintentional Delay

The requirements of a grantable petition pursuant to 37 C.F.R. §1.137(b) are the petition and fee therefor, a reply, a proper statement of unintentional delay under the regulation, and, where applicable, a terminal disclaimer and fee.

BACKGROUND

The record reflects that:

- Petitioner (former Counsel, Patrick D. Richards (Reg. No. 48,905)) failed to reply timely and properly to the Notice to File Missing Parts (oath/declaration and surcharge) action mailed by the Office of Patent Application Processing (OPAP) (formerly the Office of Initial Patent Examination (OIPE)) on 3 June, 2004, with reply due on or before 3 August, 2004;

- though properly addressed as Petitioner had directed in the application transmittal ("Patrick D. Richards, 227 West Monroe, Chicago, IL 60606"), the Notice of Missing Parts was returned to the Office by the U.S. Postal Service (USPS) as undelivered on 18 June, 2004;

- the application went abandoned after midnight 3 August, 2004;
- the Office mailed the Notice of Abandonment on 22 February, 2005;
- though properly addressed as Petitioner had directed in the application transmittal, the Notice of Missing Parts was returned to the Office by the USPS as undelivered on 19 April, 2005;
- on 24 October, 2006, Petitioner filed a Notice of Change of Address correlated to what was averred to have been his Customer Number, but made no inquiry as to the instant application;
- on 5 January, 2007, Petitioner Richards filed the original two-page petition under 37 C.F.R. §1.181 to withdraw the holding of abandonment, with a reply in the form of the oath/declaration and surcharge and but four pages of copied documents in the form of the envelope and three pages of the filing receipt mailed to Petitioner but returned to the Office by the USPS—and Petitioner avers events but with no support for the delay between the filing date of the application (7 April, 2004) and the date on which Petitioner avers he had his paralegal first contact the Office (23 October, 2006.; and apparently there was another two-plus month delay before Petitioner filed the instant petition—and the petition was dismissed on 13 March, 2008, for Petitioner's failure to satisfy the showing requirements set forth at MPEP §711.03(c).
- on 8 May, 2008, Petitioner/new Counsel Howard Sobelman (Reg. No. 39,038) filed the instant petition with fee, the reply in the form of an oath/declaration and surcharge having been previously filed, and made the statement of unintentional delay, with the statement showing set forth by Petitioner Richards.

The record (including the petitions filed on 5 January and 8 May, 2008) does not necessitate a finding that the delay between midnight 3 August, 2004 (the date of abandonment), and 8 May, 2008 (the date of filing of grantable petition), was not unintentional.

Rather, the Patent and Trademark Office is relying in this matter on the duty of candor and good faith of Petitioners/Counsel Patrick D. Richards (Reg. No. 48,905) and Howard Sobelman (Reg. No. 39,038) when accepting Petitioners' representation that the delay in filing the response <u>was</u> unintentional.[1]

The terminal disclaimer filed on 8 May, 2008, under 37 C.F.R. §1.137(d) has been made of record.

---

[1] *See:* <u>Changes to Patent Practice and Procedure</u>, 62 <u>Fed. Reg.</u> at 53160 and 53178, 1203 <u>Off. Gaz. Pat. Office</u> at 88 and 103 (responses to comments 64 and 109)(applicant obligated under 37 C.F.R. §10.18 to inquire into the underlying facts and circumstances when providing the statement required by 37 C.F.R. §1.137(b) to the Patent and Trademark Office).

Out of an abundance of caution, Petitioners always are reminded that those registered to practice and all others who make representations before the Office are to inquire into the underlying facts of representations made to the Office and support averments with the appropriate documentation–since all owe to the Office the continuing duty to disclose.[2]

The availability of applications and application papers online to applicants/practitioners who diligently associate their Customer Number with the respective application(s) now provides an applicant/practitioner on-demand information as to events/transactions in an application.

As to Allegations of
Unintentional Delay

The requirements under 37 C.F.R. §1.137(b) have been satisfied.

CONCLUSION

Accordingly, The petition under 37 C.F.R. §1.137(b) is **granted**.

The instant application is released to OPAP for further processing in due course.

Petitioner may find it beneficial to view Private PAIR within a fortnight of the instant decision to ensure that the revival has been acknowledged by the OPAP in response to this decision. It is noted that all inquiries with regard to that change in status need be directed to OPAP where that change of status must be effected—that does not occur in the Office of Petitions.

[2] See supplement of 17 June, 1999. The Patent and Trademark Office is relying on Petitioner's duty of candor and good faith and accepting a statement made by Petitioner. See Changes to Patent Practice and Procedure, 62 Fed. Reg. at 53160 and 53178, 1203 Off. Gaz. Pat. Office at 88 and 103 (responses to comments 64 and 109)(applicant obligated under 37 C.F.R. §10.18 to inquire into the underlying facts and circumstances when providing statements to the Patent and Trademark Office).

Telephone inquiries regarding this decision may be directed to the undersigned at (571) 272-3214—it is noted, however, that all practice before the Office is in writing (see: 37 C.F.R. §1.2[3]) and the proper authority for action on any matter in this regard are the statutes (35 U.S.C.), regulations (37 C.F.R.) and the commentary on policy (MPEP). Therefore, no telephone discussion may be controlling or considered authority for Petitioner's action(s).

/John J. Gillon, Jr./
John J. Gillon, Jr.
Senior Attorney
Office of Petitions

[3] The regulations at 37 C.F.R. §1.2 provide:

§1.2 Business to be transacted in writing.

All business with the Patent and Trademark Office should be transacted in writing. The personal attendance of applicants or their attorneys or agents at the Patent and Trademark Office is unnecessary. The action of the Patent and Trademark Office will be based exclusively on the written record in the Office. No attention will be paid to any alleged oral promise, stipulation, or understanding in relation to which there is disagreement or doubt.

UNITED STATES PATENT AND TRADEMARK OFFICE

Commissioner for Patents
United States Patent and Trademark Office
P.O. Box 1450
Alexandria, VA 22313-1450
www.uspto.gov

MCDERMOTT, WILL & EMERY LLP
227 WEST MONROE STREET
CHICAGO IL 60606-5096

COPY MAILED

MAR 19 2007

OFFICE OF PETITIONS

In re Application of :
Lasch et al. :
Application No. 29/202,952 : ON PETITION
Filed: April 7, 2004 :
Attorney Docket No. 37355-242 :

This is a decision on the petition under 37 CFR 1.181 to withdraw the holding of abandonment, filed January 5, 2007.

The petition to withdraw the holding of abandonment is **Dismissed**.

Any request for reconsideration should be filed within **TWO MONTHS** of the mailing date of this decision in order to be considered timely. 37 CFR 1.181(f). This time period may not be extended pursuant to 37 CFR 1.136.

This above-identified application became abandoned for failure to file a response to a Notice to File Missing Parts mailed on June 4, 2004. The Notice to Missing Parts set an extendable two (2) month period for reply. No timely request for extension of time was obtained under the provisions of 37 CFR §1.136(a). Accordingly, this application became abandoned on August 5, 2004. A Notice of Abandonment was mailed on February 22, 2005.

Petitioner asserts that the Notice mailed on June 4, 2004 was never received. A review of the record indicates the Notice while addressed properly was returned to the Office. It has come to the attention of the Office that several pieces of correspondence were returned to the Office.

It is further noted that the change of correspondence address submitted on petition request the correspondence address be changed to reflect the address associated with customer number 1923. The address associated with the customer number contains the same street address and zip code except the inclusion of the law firm name of McDermot Will and Emery LLP vs. addressee Patrick D. Richards. If the correspondence failed to reach petitioner because the address provided on filing was insufficient because the law firm is located in at least a fifty four (54) floor building, than petitioner is not entitled to a withdrawal of the holding of abandonment.

Where an application becomes abandoned as a consequence of a change of correspondence address (the Office action being mailed to the old, uncorrected address and failing to reach the applicant in sufficient time to permit a timely reply) an adequate showing of "unavoidable" delay will require a showing that due care was taken to adhere to the requirement for prompt notification in each concerned application of the change of address (see MPEP § 601.03), and must include an adequate showing that a timely notification of the change of address was filed in the application concerned, and in a manner reasonably calculated to call attention to the fact that it was a notification of a change of address. The lack of notification, or belated notification, to the U.S. Patent and Trademark Office of the change in correspondence address does not constitute unavoidable delay. See MPEP 711.03(c). Nor would the failure to promptly change the correspondence allow for withdrawing the holding of abandonment.

Thus petitioner should provide additional evidence that there is not a history of failure to receive correspondence because an insufficient address was provided on filing.

In view of the evidence presented, the holding of abandonment is vacated.

Further correspondence with respect to this matter should be addressed as follows:

By mail: Mail Stop Petition
Commissioner for Patents
P.O. Box 1450
Alexandria, VA 22313-1450

By facsimile: (571) 273-8300

By delivery service:
(FedEx, UPS, DHL, etc.)

U.S. Patent and Trademark Office
Customer Service Window,
Randolph Building
401 Dulany Street
Alexandria, VA 22314

Telephone inquiries concerning this matter should be directed to the undersigned at (571) 272-3215.

Charlema R. Grant

Charlema R. Grant
Petitions Attorney
Office of Petitions

UNITED STATES PATENT AND TRADEMARK OFFICE

Commissioner for Patents
United States Patent and Trademark Office
P.O. Box 1450
Alexandria, VA 22313-1450
www.uspto.gov

COPY MAILED

JUN 15 2007

OFFICE OF PETITIONS

MCDERMOTT, WILL & EMERY LLP
227 WEST MONROE STREET
CHICAGO IL 60606-5096

In re Application of
Lasch et al.
Application No. 29/202,952
Filed: April 7, 2004
Attorney Docket No. 37355-242

ON PETITION

This is a decision on the renewed petition under 37 CFR 1.181 to withdraw the holding of abandonment, filed May 21, 2007.

The petition to withdraw the holding of abandonment is **Granted**.

This above-identified application became abandoned for failure to file a response to a Notice to File Missing Parts mailed on June 4, 2004. The Notice to Missing Parts set an extendable two (2) month period for reply. No timely request for extension of time was obtained under the provisions of 37 CFR §1.136(a). Accordingly, this application became abandoned on August 5, 2004. A Notice of Abandonment was mailed on February 22, 2005. A petition was dismissed on March 19, 2007.

Petitioner asserts that the Notice mailed on June 4, 2004 was never received. A review of the record indicates the Notice while addressed properly was returned to the Office for unknown reasons. As such there was an irregularity in the mailing of the Notice which prevented petitioner from receiving the office communication.

In view of the evidence presented, the Notice of Abandonment is hereby vacated and the holding of abandonment is withdrawn.

In light of petitioner's submission of a reply to the Notice, the re-mailing of the Notice to File Missing Parts is not required.

This application is being forwarded to the Office of Initial Patent Examination for further processing

Telephone inquiries concerning this matter should be directed to the undersigned at (571) 272-3215.

Charlema R. Grant

Charlema R. Grant

Petitions Attorney

Office of Petitions

UNITED STATES PATENT AND TRADEMARK OFFICE

Commissioner for Patents
United States Patent and Trademark Office
P.O. Box 1450
Alexandria, VA 22313-1450
www.uspto.gov

MCDERMOTT, WILL & EMERY LLP
227 WEST MONROE STREET
CHICAGO IL 60606-5096

COPY MAILED

MAR 19 2007

OFFICE OF PETITIONS

In re Application of
Lasch et al.
Application No. 29/202,953
Filed: April 7, 2004
Attorney Docket No. 37355-243

ON PETITION

This is a decision on the petition under 37 CFR 1.181 to withdraw the holding of abandonment, filed January 5, 2007.

The petition to withdraw the holding of abandonment is **Dismissed**.

Any request for reconsideration should be filed within **TWO MONTHS** of the mailing date of this decision in order to be considered timely. 37 CFR 1.181(f). This time period may not be extended pursuant to 37 CFR 1.136.

This above-identified application became abandoned for failure to file a response to a Notice to File Missing Parts mailed on June 4, 2004. The Notice to Missing Parts set an extendable two (2) month period for reply. No timely request for extension of time was obtained under the provisions of 37 CFR §1.136(a). Accordingly, this application became abandoned on August 5, 2004. A Notice of Abandonment was mailed on February 22, 2005.

Petitioner asserts that the Notice mailed on June 4, 2004 was never received. A review of the record indicates the Notice while addressed properly was returned to the Office. It has come to the attention of the Office that several pieces of correspondence were returned to the Office.

It is further noted that the change of correspondence address submitted on petition request the correspondence address be changed to reflect the address associated with customer number 1923. The address associated with the customer number contains the same street address and zip code except the inclusion of the law firm name of McDermot Will and Emery LLP vs. addressee Patrick D. Richards. If the correspondence failed to reach petitioner because the address provided on filing was insufficient because the law firm is located in at least a fifty four (54) floor building than petitioner is not entitled to a withdrawal of the holding of abandonment.

Where an application becomes abandoned as a consequence of a change of correspondence address (the Office action being mailed to the old, uncorrected address and failing to reach the applicant in sufficient time to permit a timely reply) an adequate showing of "unavoidable" delay will require a showing that due care was taken to adhere to the requirement for prompt notification in each concerned application of the change of address (see MPEP § 601.03), and must include an adequate showing that a timely notification of the change of address was filed in the application concerned, and in a manner reasonably calculated to call attention to the fact that it was a notification of a change of address. The lack of notification, or belated notification, to the U.S. Patent and Trademark Office of the change in correspondence address does not constitute unavoidable delay. See MPEP 711.03(c). Nor would the failure to promptly change the correspondence allow for withdrawing the holding of abandonment.

Thus petitioner should provide additional evidence that there is not a history of failure to receive correspondence because an insufficient address was provided on filing.

In view of the evidence presented, the holding of abandonment is vacated.

Further correspondence with respect to this matter should be addressed as follows:

By mail: Mail Stop Petition
Commissioner for Patents
P.O. Box 1450
Alexandria, VA 22313-1450

By facsimile: (571) 273-8300

By delivery service:
(FedEx, UPS, DHL, etc.)

U.S. Patent and Trademark Office
Customer Service Window,
Randolph Building
401 Dulany Street
Alexandria, VA 22314

Telephone inquiries concerning this matter should be directed to the undersigned at (571) 272-3215.

Charlema R. Grant

Charlema R. Grant
Petitions Attorney
Office of Petitions

UNITED STATES PATENT AND TRADEMARK OFFICE

Commissioner for Patents
United States Patent and Trademark Office
P.O. Box 1450
Alexandria, VA 22313-1450
www.uspto.gov

MCDERMOTT, WILL & EMERY LLP
227 WEST MONROE STREET
CHICAGO IL 60606-5096

COPY MAILED

JUN 15 2007

OFFICE OF PETITIONS

In re Application of
Lasch et al.
Application No. 29/202,953
Filed: April 7, 2004
Attorney Docket No. 37355-243

ON PETITION

This is a decision on the renewed petition under 37 CFR 1.181 to withdraw the holding of abandonment, filed May 21, 2007.

The petition to withdraw the holding of abandonment is **Granted**.

This above-identified application became abandoned for failure to file a response to a Notice to File Missing Parts mailed on June 4, 2004. The Notice to Missing Parts set an extendable two (2) month period for reply. No timely request for extension of time was obtained under the provisions of 37 CFR §1.136(a). Accordingly, this application became abandoned on August 5, 2004. A Notice of Abandonment was mailed on February 22, 2005. A petition filed under 37 CFR 1.181 was dismissed on March 19, 2007.

Petitioner asserts that the Notice mailed on June 4, 2004 was never received. A review of the record indicates the Notice while addressed properly was returned to the Office for unknown reasons. As such there was an irregularity in the mailing of the Notice which prevented petitioner from receiving the office communication.

In view of the evidence presented, the Notice of Abandonment is hereby vacated and the holding of abandonment is withdrawn.

In light of petitioner's submission of a reply to the Notice, the re-mailing of the Notice to File Missing Parts is not required.

This application is being forwarded to the Office of Initial Patent Examination for further processing

Telephone inquiries concerning this matter should be directed to the undersigned at (571) 272-3215.

Charlema R. Grant

Charlema R. Grant
Petitions Attorney
Office of Petitions

UNITED STATES PATENT AND TRADEMARK OFFICE

Commissioner for Patents
United States Patent and Trademark Office
P.O. Box 1450
Alexandria, VA 22313-1450
www.uspto.gov

MCDERMOTT, WILL & EMERY LLP
227 WEST MONROE STREET
CHICAGO IL 60606-5096

COPY MAILED

MAR 19 2007

OFFICE OF PETITIONS

ON PETITION

In re Application of
Lasch et al.
Application No. 29/202,954
Filed: April 7, 2004
Attorney Docket No. 37355-244

This is a decision on the petition under 37 CFR 1.181 to withdraw the holding of abandonment, filed January 5, 2007.

The petition to withdraw the holding of abandonment is **Dismissed**.

Any request for reconsideration should be filed within **TWO MONTHS** of the mailing date of this decision in order to be considered timely. 37 CFR 1.181(f). This time period may not be extended pursuant to 37 CFR 1.136.

This above-identified application became abandoned for failure to file a response to a Notice to File Missing Parts mailed on June 4, 2004. The Notice to Missing Parts set an extendable two (2) month period for reply. No timely request for extension of time was obtained under the provisions of 37 CFR §1.136(a). Accordingly, this application became abandoned on August 5, 2004. A Notice of Abandonment was mailed on February 22, 2005.

Petitioner asserts that the Notice mailed on June 4, 2004 was never received. A review of the record indicates the Notice while addressed properly was returned to the Office. It has come to the attention of the Office that several pieces of correspondence were returned to the Office.

It is further noted that the change of correspondence address submitted on petition request the correspondence address be changed to reflect the address associated with customer number 1923. The address associated with the customer number contains the same street address and zip code except the inclusion of the law firm name of McDermot Will and Emery LLP vs. addressee Patrick D. Richards. If the correspondence failed to reach petitioner because the address provided on filing was insufficient because the law firm is located in at least a fifty four (54) floor building, than petitioner is not entitled to a withdrawal of the holding of abandonment.

Where an application becomes abandoned as a consequence of a change of correspondence address (the Office action being mailed to the old, uncorrected address and failing to reach the applicant in sufficient time to permit a timely reply) an adequate showing of "unavoidable" delay will require a showing that due care was taken to adhere to the requirement for prompt notification in each concerned application of the change of address (see MPEP § 601.03), and must include an adequate showing that a timely notification of the change of address was filed in the application concerned, and in a manner reasonably calculated to call attention to the fact that it was a notification of a change of address. The lack of notification, or belated notification, to the U.S. Patent and Trademark Office of the change in correspondence address does not constitute unavoidable delay. See MPEP 711.03(c). Nor would the failure to promptly change the correspondence allow for withdrawing the holding of abandonment.

Thus petitioner should provide additional evidence that there is not a history of failure to receive correspondence because an insufficient address was provided on filing.

In view of the evidence presented, the holding of abandonment is vacated.

Further correspondence with respect to this matter should be addressed as follows:

By mail:	Mail Stop Petition Commissioner for Patents P.O. Box 1450 Alexandria, VA 22313-1450
By facsimile:	(571) 273-8300
By delivery service:	U.S. Patent and Trademark Office

(FedEx, UPS, DHL, etc.) Customer Service Window,
Randolph Building
401 Dulany Street
Alexandria, VA 22314

Telephone inquiries concerning this matter should be directed to the undersigned at (571) 272-3215.

Charlema R. Grant

Charlema R. Grant
Petitions Attorney
Office of Petitions

UNITED STATES PATENT AND TRADEMARK OFFICE

Commissioner for Patents
United States Patent and Trademark Office
P.O. Box 1450
Alexandria, VA 22313-1450
www.uspto.gov

MCDERMOTT, WILL & EMERY LLP
227 WEST MONROE STREET
CHICAGO IL 60606-5096

COPY MAILED

JUN 15 2007

OFFICE OF PETITIONS

In re Application of
Lasch et al.
Application No. 29/202,954
Filed: April 7, 2004
Attorney Docket No. 37355-244

ON PETITION

This is a decision on the renewed petition under 37 CFR 1.181 to withdraw the holding of abandonment, filed May 21, 2007.

The petition to withdraw the holding of abandonment is **Granted**.

This above-identified application became abandoned for failure to file a response to a Notice to File Missing Parts mailed on June 4, 2004. The Notice to Missing Parts set an extendable two (2) month period for reply. No timely request for extension of time was obtained under the provisions of 37 CFR §1.136(a). Accordingly, this application became abandoned on August 5, 2004. A Notice of Abandonment was mailed on February 22, 2005. A petition was dismissed under 37 CFR 1.181 on March 19, 2007.

Petitioner asserts that the Notice mailed on June 4, 2004 was never received. A review of the record indicates the Notice while addressed properly was returned to the Office for unknown reasons. As such there was an irregularity in the mailing of the Notice which prevented petitioner from receiving the office communication.

In view of the evidence presented, the Notice of Abandonment is hereby vacated and the holding of abandonment is withdrawn.

In light of petitioner's submission of a reply to the Notice, the re-mailing of the Notice to File Missing Parts is not required.

This application is being forwarded to the Office of Initial Patent Examination for further processing

Telephone inquiries concerning this matter should be directed to the undersigned at (571) 272-3215.

Charlema R. Grant

Charlema R. Grant
Petitions Attorney
Office of Petitions

UNITED STATES PATENT AND TRADEMARK OFFICE

Commissioner for Patents
United States Patent and Trademark Office
P.O. Box 1450
Alexandria, VA 22313-1450
www.uspto.gov

KARSTEN MANUFACTURING CORPORATION
LEGAL DEPARTMENT
2201 WEST DESERT COVE
PHOENIX AZ 85029

COPY MAILED

DEC 2 0 2005

OFFICE OF PETITIONS

In re Application of
Chen et al.
Application No. 29/203,007
Filed: April 7, 2004
Attorney Docket Number: KMC-619
Title of Invention: Golf Driver Head

ON PETITION

This is a decision on the petition under 37 CFR 1.137(b), filed November 7, 2005, to revive the above-identified application.

This petition is hereby **Dismissed**.

Any request for reconsideration must be submitted within TWO (2) MONTHS from the mail date of this decision. Extensions of time under 37 CFR 1.136(a) are permitted. The reconsideration request should include a cover letter entitled "Renewed Petition under 37 CFR 1.137(b)." This is **not** final agency action within the meaning of 5 U.S.C. §704.

This application became abandoned for failure to timely submit the issue fee, as required by the Notice of Allowance and Fees Due, which was mailed February 18, 2005 and set a 3 month statutory period for reply. Extensions of time were not available under 37 CFR 1.136 (a). Accordingly, this application became abandoned on May 19, 2005. A Notice of Abandonment was mailed on October 25, 2005.

A grantable petition under 37 CFR 1.137(b) must be accompanied by: (1) the required reply, unless previously filed; (2) the petition fee as set forth in 37 CFR 1.17(m); (3) a statement that "the entire delay in filing the required reply from the due date for the reply until the filing of a grantable petition pursuant to 37 CFR 1.137(b) was unintentional"; and (4) any terminal disclaimer (and fee as set forth in 37 CFR 1.20(d)) required by 37 CFR 1.137(c). Where there is a question as to whether either the abandonment or the delay in filing a petition under 37 CFR 1.137 was unintentional, the

Commissioner may require additional information. See MPEP 711.03 (c)(III)(c) and (D).

The instant petition lacks item (4) the terminal disclaimer and fee. A terminal disclaimer and the $130 terminal disclaimer fee is required under 37 CFR 1.137(c) if the application is: (1) a design application, (2) a utility application filed before June 8, 1995, or (3) a plant application filed before June 8, 1995. The terminal disclaimer must dedicate to the public a terminal part of the term of any patent granted the application equivalent to the period of abandonment of the application, and must also apply to any patent granted on any application containing a specific reference under 35 U.S.C. 120, 121 or 365(c) to the application for which revival is sought.

Further correspondence with respect to this matter should be addressed as follows:

By mail:	Mail Stop Petition Commissioner for Patents P.O. Box 1450 Alexandria, VA 22313-1450
By facsimile:	(571) 273-8300
By delivery service: (FedEx, UPS, DHL, etc.)	U.S. Patent and Trademark Office Customer Service Window, Randolph Building 401 Dulany Street Alexandria, VA 22314

Telephone inquiries concerning this matter should be directed to the undersigned at (571) 272-3215.

Charlema R. Grant

Charlema R. Grant
Petitions Attorney
Office of Petitions

UNITED STATES PATENT AND TRADEMARK OFFICE

Commissioner for Patents
United States Patent and Trademark Office
P.O. Box 1450
Alexandria, VA 22313-1450
www.uspto.gov

KARSTEN MANUFACTURING CORPORATION
LEGAL DEPARTMENT
2201 WEST DESERT COVE
PHOENIX AZ 85029

COPY MAILED

FEB 17 2006

OFFICE OF PETITIONS

In re Application of :
Chen et al. :
Application No. 29/203,007 :
Filed: April 7, 2004 :
Title of Invention: Golf Driver Head :

ON PETITION

This is a decision on the renewed petition filed January 3, 2006, under 37 CFR 1.137(b) to revive the above-identified application.

This application became abandoned for failure to timely submit the issue fee, as required by the Notice of Allowance and Fees Due, which was mailed February 18, 2005 and set a 3 month statutory period for reply. Extensions of time were not available under 37 CFR 1.136 (a). Accordingly, this application became abandoned on May 19, 2005. A Notice of Abandonment was mailed on October 25, 2005.

The requirements for a grantable petition under 37 CFR 1.137(b) have been met. This petition is hereby **Granted**.

The Office is in receipt of the terminal disclaimer.

This application is being forwarded to the Office of Patent Publication for processing into a patent.

Telephone inquiries should be directed to the undersigned at (571) 272-3215.

Charlema R. Grant
Petitions Attorney
Office of Petitions

OIPE JC10
FEB 2 4 2005
PATENT & TRADEMARK OFFICE

PATENT

IN THE UNITED STATES PATENT AND TRADEMARK OFFICE

In re Application of:

Jeffrey Henderson

Serial No.: 29/203,011

Filed: April 8, 2004

For: SIDE ELEMENT OF A SHOE UPPER

Examiner: Domonic Simone

Group Art Unit: 2900

Attorney Docket No.: 2465-6334US

Simone

NOTICE OF EXPRESS MAILING

Express Mail Mailing Label Number: EL994825613

Date of Deposit with USPS: February 24, 2005

Person making Deposit: Laurence B. Bond

PETITION TO MAKE SPECIAL FOR NEW APPLICATION UNDER M.P.E.P. SECTION 708.02 VIII

Mail Stop Design
Commissioner for Patents
P.O. Box 1450
Alexandria, VA 22313-1450

Sir:

PETITION:

Applicant hereby petitions to make the above-referenced application, which has not received an examination by the Examiner, special.

CLAIMS:

In applicant's view, all of the claims of this application are directed to a single invention. If the Office determines that the application is not obviously directed to a single invention, then the applicant will make an election without traverse as a prerequisite to the grant of special status.

03/01/2005 SMINASS1 00000102 29203011
01 FC:1464 130.00 OP

PETITION GRANTED

Richard Crispino MAR 16 2005
Special Program Examiner
TC 1700

UNITED STATES PATENT AND TRADEMARK OFFICE

Commissioner for Patents
United States Patent and Trademark Office
P.O. Box 1450
Alexandria, VA 22313-1450
www.uspto.gov

G. Brian Pingel
Ste. 277
Regency West 5, 4500 Westown Parkway
West Des Moines IA 50266

COPY MAILED
NOV 1 6 2006
OFFICE OF PETITIONS

In re Application of
Greenspon
Application No. 29/203,017
Filed: April 8, 2004
Attorney Docket No. 13676/0009
For: DRINKING MUG WITH STIRRING APPARATUS

DECISION ON PETITION
UNDER 37 CFR 1.181

This is a decision on the petition under 37 CFR 1.181, filed October 27, 2006 (certificate of mailing date October 24, 2006), to withdraw the holding of abandonment of the above-identified application.

The petition under 37 CFR 1.181 is **GRANTED**.

This application was held abandoned due to applicant's alleged failure to reply within three months of the February 7, 2006 mailing of a non-final Office action. The Office contended that this application became abandoned on May 8, 2006. A Notice of Abandonment was mailed on September 25, 2006.

Petitioner asserts that a reply was timely filed on certificate of mailing date April 10, 2006 and received in the Office on April 24, 2006. In support of this assertion, petitioner has provided a copy of applicant's response that contains a proper certificate of mailing bearing an April 10, 2006 date of deposit.

In addition, petitioner has submitted an itemized postcard receipt showing an Office of Initial Patent Examination date stamp, citing April 24, 2006 as the date of receipt, affixed thereto. The postcard lists that the filing included drawings, a transmittal, and a certificate of mailing. The return postcard constitutes *prima facie* evidence that the items listed thereon were received in the Office on April 24, 2006. MPEP 503.

A review of the application file reveals that applicant's April 24, 2006 (certificate of mailing date April 10, 2006) reply is present.

Accordingly, the petition under 37 CFR 1.181 is **GRANTED**, the holding of abandonment is withdrawn, and the September 25, 2006 Notice of Abandonment is vacated.

After the mailing of this decision, the application file will be returned to Technology Center A.U. 2915 for consideration of the amendment and drawings filed on April 24, 2006 (certificate of mailing date April 10, 2006).

Any inquiries pertaining to this matter may be directed to the undersigned at (571) 272-3230.

Shirene Willis Brantley

Shirene Willis Brantley
Senior Petitions Attorney
Office of Petitions
Office of the Deputy Commissioner
for Patent Examination Policy

UNITED STATES PATENT AND TRADEMARK OFFICE

Commissioner for Patents
United States Patent and Trademark Office
P.O. Box 1450
Alexandria, VA 22313-1450
www.uspto.gov

G. Brian Pingel
Ste. 277
Regency West 5, 4500 Westown Parkway
West Des Moines IA 50266

COPY MAILED
NOV 1 6 2006
OFFICE OF PETITIONS

In re Application of Greenspon Application No. 29/203,018 Filed: April 8, 2004 Attorney Docket No. 13676/0008 For: DRINKING TUMBLER WITH STIRRING APPARATUS	DECISION ON PETITION UNDER 37 CFR 1.181

This is a decision on the petition under 37 CFR 1.181, filed October 27, 2006 (certificate of mailing date October 24, 2006), to withdraw the holding of abandonment of the above-identified application.

The petition under 37 CFR 1.181 is **GRANTED**.

This application was held abandoned due to applicant's alleged failure to reply within three months of the February 6, 2006 mailing of a non-final Office action. The Office contended that this application became abandoned on May 7, 2006. A Notice of Abandonment was mailed on September 22, 2006.

Petitioner asserts that the February 6, 2006 non-final Office action wa not received.

The showing required to establish non-receipt of an Office communication must include:

1. A statement from the practitioner stating that the Office communication was not received by the practitioner and attesting to the fact that a search of the file jacket and docket records indicates that the Office communication was not received.
2. A copy of the docket record where the non-received Office communication would have been entered had it been received and docketed must be attached to and referenced in practitioner's statement.[1]

[1] See notice entitled "Withdrawing the Holding of Abandonment When Office Actions Are Not Received," 1156 O.G. 53 (November 16, 1993).

Petitioner has submitted a copy of the calendar system/docket record where the requirement would have been entered had the February 6, 2006 non-final Office action been received. In addition, practitioner referenced the records in the petition and stated that a review of the file jacket and docket records for the February 6, 2006 non-final Office action was fruitless.

Petitioner has established non-receipt. The petition is **granted**, the Notice of Abandonment is vacated, and the holding of abandonment is withdrawn.

Petitioner has responded to the February 6, 2006 non-final Office action. Therefore, it is unnecessary to re-mail it. After the mailing of this decision, the application will be returned to Technology Center A.U. 2915 for consideration of applicant's reply filed on October 27, 2006 (certificate of mailing date October 24, 2006).

Telephone inquiries may be directed to the undersigned at (571) 272-3230.

Shirene Willis Brantley

Shirene Willis Brantley
Senior Petitions Attorney
Office of Petitions
Office of the Deputy Commissioner
for Patent Examination Policy

UNITED STATES PATENT AND TRADEMARK OFFICE

Commissioner for Patents
United States Patent and Trademark Office
P.O. Box 1450
Alexandria, VA 22313-1450
www.uspto.gov

ROBERT D. FISH
RUTAN & TUCKER LLP
611 ANTON BLVD 14TH FLOOR
COSTA MESA CA 92626-1931

COPY MAILED

APR 0 3 2006

OFFICE OF PETITIONS

In re Application of	:	
Thrush, Bruce A.	:	
Application No. 29/203,027	:	ON PETITION
Filed: April 9, 2004	:	
Attorney Docket No. 101342.0010DES	:	

This is a decision on the petition under 37 C.F.R. § 1.137(b), filed January 17, 2006, to revive the above-identified application.

The petition is **GRANTED.**

The petition satisfies the conditions for revival pursuant to the provisions of 37 CFR 1.137(b) in that (1) the reply in the form of a Response to the Office action, which includes an election; (2) the petition fee; (3) the required statement of unintentional delay have been received; and (4) the terminal disclaimer. Accordingly, the response has been accepted as having been unintentionally delayed.

This matter is being referred to Technology Center 2900 for further examination on the merits.

Telephone inquiries regarding this decision should be directed to the undersigned at (571) 272-3282.

Liana Chase
Petitions Examiner
Office of Petitions

UNITED STATES PATENT AND TRADEMARK OFFICE

Commissioner for Patents
United States Patent and Trademark Office
P.O. Box 1450
Alexandria, VA 22313-1450
www.uspto.gov

JUN 21 2004

TRASK BRITT
P.O. BOX 2550
SALT LAKE CITY UT 84110

In re Application of	:	
Steven F. Smith	:	
Serial No.: 29/203,046	:	DECISION ON PETITION
Filed: April 7, 2004	:	
For: Side Element Of A Shoe Upper	:	

This is in response to the petition applicant filed on April 7, 2004 to make the above-identified application special under the provisions of 37 CFR 1.102(d).

Applicant has satisfied the provisions set forth in M.P.E.P. 708.02, VIII, thus the petition is **GRANTED**.

The application will be forwarded to the examiner for action on the merits commensurate with this decision.

Should there be any questions with regard to this letter please contact John Kittle by letter addressed to the Director, Technology Center 3700/2900, P.O. Box 1450 Alexandria, VA 22313-1450, or by telephone at (703) 308-0873 or by facsimile transmission at (703) 308-3139.

John E. Kittle

John E. Kittle
Director
Technology Center 3700/2900

UNITED STATES PATENT AND TRADEMARK OFFICE

Commissioner for Patents
United States Patent and Trademark Office
P.O. Box 1450
Alexandria, VA 22313-1450
www.uspto.gov

JUN 2 1 2004

TRASK BRITT
P.O. BOX 2550
SALT LAKE CITY UT 84110

In re Application of	:	
Steven F. Smith	:	
Serial No.: 29/203,075	:	DECISION ON PETITION
Filed: April 7, 2004	:	
For: Side Element Of A Shoe Upper	:	

This is in response to the petition applicant filed on April 7, 2004 to make the above-identified application special under the provisions of 37 CFR 1.102(d).

Applicant has satisfied the provisions set forth in M.P.E.P. 708.02, VIII, thus the petition is **GRANTED**.

The application will be forwarded to the examiner for action on the merits commensurate with this decision.

Should there be any questions with regard to this letter please contact John Kittle by letter addressed to the Director, Technology Center 3700/2900, P.O. Box 1450 Alexandria, VA 22313-1450, or by telephone at (703) 308-0873 or by facsimile transmission at (703) 308-3139.

John E. Kittle

John E. Kittle
Director
Technology Center 3700/2900

UNITED STATES PATENT AND TRADEMARK OFFICE

Commissioner for Patents
United States Patent and Trademark Office
P.O. Box 1450
Alexandria, VA 22313-1450
www.uspto.gov

AUG 04 2004

TRASK BRITT
P.O. BOX 2550
SALT LAKE CITY UT 84110

In re Application of	:	
Damon Clegg	:	
Serial No.: 29/203,076	:	DECISION ON PETITION
Filed: April 7, 2004	:	
For: Side Element of a Shoe Upper	:	

This is in response to the petition applicant filed on April 7, 2004, to make the above-identified application special under the provisions of 37 CFR 1.102(d).

Applicant has satisfied the provisions set forth in M.P.E.P. 708.02, VIII, thus the petition is **GRANTED**.

The application will be forwarded to the examiner for action on the merits commensurate with this decision.

Should there be any questions with regard to this letter please contact John Kittle by letter addressed to the Director, Technology Center 3700/2900, P.O. Box 1450 Alexandria, VA 22313-1450, or by telephone at (703) 308-0873 or by facsimile transmission at (703) 308-3139.

John E. Kittle

John E. Kittle
Director
Technology Center 3700/2900

UNITED STATES PATENT AND TRADEMARK OFFICE

Commissioner for Patents
United States Patent and Trademark Office
P.O. Box 1450
Alexandria, VA 22313-1450
www.uspto.gov

JUL 2 1 2004

BANNER & WITCOFF
1001 G STREET N W
SUITE 1100
WASHINGTON DC 20001

In re Application of	:	
Sergio G. Lozano	:	
Serial No.: 29/203,082	:	DECISION ON PETITION
Filed: April 9, 2004	:	
For: Portion Of A Shoe Upper	:	

This is in response to the petition applicant filed on June 21, 2004 to make the above-identified application special under the provisions of 37 CFR 1.102(d).

Applicant has satisfied the provisions set forth in M.P.E.P. 708.02, VIII, thus the petition is **GRANTED**.

The application will be forwarded to the examiner for action on the merits commensurate with this decision.

Should there be any questions with regard to this letter please contact John Kittle by letter addressed to the Director, Technology Center 3700/2900, P.O. Box 1450 Alexandria, VA 22313-1450, or by telephone at (703) 308-0873 or by facsimile transmission at (703) 308-3139.

John E. Kittle

John E. Kittle
Director
Technology Center 3700/2900

UNITED STATES PATENT AND TRADEMARK OFFICE

Commissioner for Patents
United States Patent and Trademark Office
P.O. Box 1450
Alexandria, VA 22313-1450
www.uspto.gov

JUL 2 1 2004

BANNER & WITCOFF
1001 G STREET N W
SUITE 1100
WASHINGTON DC 20001

In re Application of	:	
Sergio G. Lozano	:	
Serial No.: 29/203,083	:	DECISION ON PETITION
Filed: April 9, 2004	:	
For: Portion Of A Shoe Upper	:	

This is in response to the petition applicant filed on June 15, 2004 to make the above-identified application special under the provisions of 37 CFR 1.102(d).

Applicant has satisfied the provisions set forth in M.P.E.P. 708.02, VIII, thus the petition is **GRANTED**.

The application will be forwarded to the examiner for action on the merits commensurate with this decision.

Should there be any questions with regard to this letter please contact John Kittle by letter addressed to the Director, Technology Center 3700/2900, P.O. Box 1450 Alexandria, VA 22313-1450, or by telephone at (703) 308-0873 or by facsimile transmission at (703) 308-3139.

John E. Kittle

John E. Kittle
Director
Technology Center 3700/2900

UNITED STATES PATENT AND TRADEMARK OFFICE

Commissioner for Patents
United States Patent and Trademark Office
P.O. Box 1450
Alexandria, VA 22313-1450
www.uspto.gov
DIW Feb-06

KENYON & KENYON
1500 K STREET, N.W.
WASHINGTON DC 20005

COPY MAILED
FEB 24 2006
OFFICE OF PETITIONS

In re Application of	:	
Mouchi et al.	:	
Application No. 29/203,089	:	DECISION ON PETITION
Filed: 9 April, 2004	:	
Atty Docket: 13058/14	:	

This is a decision on the petition under 37 CFR 1.55(a), requesting entry of priority papers submitted after the date the issue fee was paid.

The petition is **granted**.

Receipt is acknowledged of papers submitted under 35 USC 119.

The priority papers are accepted as timely filed and have been placed of record in the file.

Petitioner is advised that the rule affecting the submission of a claim for priority of a certified priority document under 37 CFR 1.55(a) was changed effective November 7, 2000. In effect, the Office will permit applicants to file a priority claim or certified priority document with the processing fee set forth in 37 CFR 1.17(i) between the date the issue fee is paid and the date a patent is issued. The Office will, however, merely place such submission in the application file but will not attempt to determine whether the applicant has met the conditions of 35 USC 119(a)-(d) to make the priority claim information in the text of the patent. In such a situation, the patent will not contain the priority claim information. The patentee may request a certificate of correction under 35 USC 255 and 1.323 and a determination of entitlement for such priority will be made after the patent is granted. See Federal Register/Vol. 65, No. 175, September 8, 2000, page 54622.

Nevertheless, since this matter is presently before the deciding official in the Office of Petitions, action on the petition under 37 CFR 1.55(a)(2) has been undertaken. However, if the printing of the patent has progressed to the point where the priority data cannot be included on the printed patent, a certificate of correction pursuant to the provisions of 37 CFR 1.323 (accompanied by the required fee of $100.00) should be requested.

Any questions concerning this decision on petition should be directed to Senior Petitions Attorney Douglas I. Wood at (571) 272-3231. Any questions concerning the issuance of this application into a patent should be directed to Customer Services at (571) 272-4200. Any questions concerning issuance of a certificate of correction should be directed to the Certificates of Correction Branch at (703) 305-8309.

The application file is being referred to the Publishing Division.

Frances Hicks
Lead Petitions Examiner
Office of Petitions

UNITED STATES PATENT AND TRADEMARK OFFICE

Commissioner for Patents
United States Patent and Trademark Office
P.O. Box 1450
Alexandria, VA 22313-1450
www.uspto.gov
DIW Feb-06

KENYON & KENYON
1500 K STREET, N.W.
WASHINGTON DC 20005

COPY MAILED

FEB 24 2006

OFFICE OF PETITIONS

In re Application of	:	
Mouchi et al.	:	
Application No. 29/203,090	:	DECISION ON PETITION
Filed: 9 April, 2004	:	
Atty Docket: 13058/1	:	

This is a decision on the petition under 37 CFR 1.55(a), requesting entry of priority papers submitted after the date the issue fee was paid.

The petition is **granted**.

Receipt is acknowledged of papers submitted under 35 USC 119.

The priority papers are accepted as timely filed and have been placed of record in the file.

Petitioner is advised that the rule affecting the submission of a claim for priority of a certified priority document under 37 CFR 1.55(a) was changed effective November 7, 2000. In effect, the Office will permit applicants to file a priority claim or certified priority document with the processing fee set forth in 37 CFR 1.17(i) between the date the issue fee is paid and the date a patent is issued. The Office will, however, merely place such submission in the application file but will not attempt to determine whether the applicant has met the conditions of 35 USC 119(a)-(d) to make the priority claim information in the text of the patent. In such a situation, the patent will not contain the priority claim information. The patentee may request a certificate of correction under 35 USC 255 and 1.323 and a determination of entitlement for such priority will be made after the patent is granted. See Federal Register/Vol. 65, No. 175, September 8, 2000, page 54622.

Nevertheless, since this matter is presently before the deciding official in the Office of Petitions, action on the matter under 37 CFR 1.55(a)(2) has been undertaken. However, if the printing of the patent has progressed to the point where the priority data cannot be included on the printed patent, a certificate of correction pursuant to the provisions of 37 CFR 1.323 (accompanied by the required fee of $100.00) should be requested.

Any questions concerning this decision on petition should be directed to Senior Petitions Attorney Douglas I. Wood at (571) 272-3231. Any questions concerning the issuance of this application into a patent should be directed to Customer Services at (571) 272-4200. Any questions concerning issuance of a certificate of correction should be directed to the Certificates of Correction Branch at (703) 305-8309.

The application file is being referred to the Publishing Division.

Frances Hicks

Frances Hicks
Lead Petitions Examiner
Office of Petitions

UNITED STATES PATENT AND TRADEMARK OFFICE

Commissioner for Patents
United States Patent and Trademark Office
P.O. Box 1450
Alexandria, VA 22313-1450
www.uspto.gov
DIW Feb-06

KENYON & KENYON
1500 K STREET, N.W.
WASHINGTON DC 20005

COPY MAILED

FEB 2 4 2006

OFFICE OF PETITIONS

In re Application of	:	
Mouchi et al.	:	
Application No. 29/203,091	:	DECISION ON PETITION
Filed: 9 April, 2004	:	
Atty Docket: 13058/13	:	

This is a decision on the petition under 37 CFR 1.55(a), requesting entry of priority papers submitted after the date the issue fee was paid.

The petition is **granted**.

Receipt is acknowledged of papers submitted under 35 USC 119.

The priority papers are accepted as timely filed and have been placed of record in the file.

Petitioner is advised that the rule affecting the submission of a claim for priority of a certified priority document under 37 CFR 1.55(a) was changed effective November 7, 2000. In effect, the Office will permit applicants to file a priority claim or certified priority document with the processing fee set forth in 37 CFR 1.17(i) between the date the issue fee is paid and the date a patent is issued. The Office will, however, merely place such submission in the application file but will not attempt to determine whether the applicant has met the conditions of 35 USC 119(a)-(d) to make the priority claim information in the text of the patent. In such a situation, the patent will not contain the priority claim information. The patentee may request a certificate of correction under 35 USC 255 and 1.323 and a determination of entitlement for such priority will be made after the patent is granted. See Federal Register/Vol. 65, No. 175, September 8, 2000, page 54622.

Nevertheless, since this matter is presently before the deciding official in the Office of Petitions, action on the petition under 37 CFR 1.55(a)(2) has been undertaken. However, if the printing of the patent has progressed to the point where the priority data cannot be included on the printed patent, a certificate of correction pursuant to the provisions of 37 CFR 1.323 (accompanied by the required fee of $100.00) should be requested.

Any questions concerning this decision on petition should be directed to Senior Petitions Attorney Douglas I. Wood at (571) 272-3231. Any questions concerning the issuance of this application into a patent should be directed to Customer Services at (571) 272-4200. Any questions concerning issuance of a certificate of correction should be directed to the Certificates of Correction Branch at (703) 305-8309.

The application file is being referred to the Publishing Division.

Frances Hicks
Lead Petitions Examiner
Office of Petitions

UNITED STATES PATENT AND TRADEMARK OFFICE

Commissioner for Patents
United States Patent and Trademark Office
P.O. Box 1450
Alexandria, VA 22313-1450
www.uspto.gov

KENYON & KENYON
1500 K Street, N.W.
Washington, DC 20005

COPY MAILED

DEC 01 2005

OFFICE OF PETITIONS

In re Application of :
Mouchi, et al. :
Application No. 29/203,098 :
Filed April 9, 2004 :
Attorney Docket No. 13058/10 :

This is a decision on the petition under 37 CFR 1.55(a)(2), filed June 17, 2005, for entry of priority papers submitted after the date the issue fee was paid.

The petition is **granted**.

Receipt of papers submitted under 35 U.S.C. § 119 is acknowledged.

The priority papers are accepted as timely filed and have been placed of record in the file.

Petitioner is advised that the rule affecting the submission of a claim for priority of a certified priority document under 37 CFR 1.55(a) was changed effective November 7, 2000. In effect, the Office will permit applicants to file a priority claim or certified priority document with the processing fee set forth in 37 CFR 1.17(i) between the date the issue fee is paid and the date a patent is issued. The Office will however, merely place such submission in the application file but will not attempt to determine whether the applicant has met the conditions of 35 U.S.C. § 119(a)-(d) to make the priority claim information in the text of the patent. In such a situation, the patent will not contain the priority claim information. In such an event, the patentee may request a certificate of correction under 35 U.S.C. § 255 and 1.323 and a determination of entitlement for such priority will be made after the patent is granted. See Federal Register Vol. 65, No. 175, September 8, 2000, page 54622.

Nevertheless, since the petition under 37 CFR 1.55(a) is now before the deciding official, a favorable decision has been rendered. However, if the printing of the patent has progressed to the point where the priority data cannot be included on the printed patent, petitioner may request a certificate of correction pursuant to the provisions of 37 CFR 1.323 and pay the required fee of $100.00

Any questions concerning this decision on petition should be directed to the undersigned at (571)272-3222. Any questions concerning the issuance of this application into a patent should be directed to Customer Services at (571) 272-4200.

This matter is being referred to the Publishing Division.

Kenya A. McLaughlin

Kenya A. McLaughlin
Petitions Attorney
Office of Petitions

UNITED STATES PATENT AND TRADEMARK OFFICE

Commissioner for Patents
United States Patent and Trademark Office
P.O. Box 1450
Alexandria, VA 22313-1450
www.uspto.gov

ALBIHNS STOCKHOLM AB
Linnegatan 2
BOX 5581
SE-114 85 Stockholm SWEDEN

COPY MAILED

SEP 12 2006

OFFICE OF PETITIONS

In re Application of	:	
ORELL	:	
Application No. 29/203,119	:	DECISION ON PETITION
Filed: April 09, 2004	:	TO WITHDRAW
Attorney Docket No. M11657	:	FROM RECORD
	:	

This is a decision on the Request to Withdraw as attorney or agent of record under 37 C.F.R. § 1.36(b), filed June 29, 2006.

The request is **NOT APPROVED**.

A grantable request to withdraw as attorney/agent of record must be signed by every attorney/agent seeking to withdraw or contain a clear indication that one attorney is signing on behalf of another/others. A request to withdraw will not be approved unless at least 30 (thirty) days would remain between the date of approval and the later of the expiration date of a time to file a response or the expiration date of the maximum time period which can be extended under 37 C.F.R. § 1.136(a).

The Office cannot approve the request at this time since the reasons provided do not meet any of the conditions under the mandatory or permissive categories enumerated in 37 CFR 10.40. Section 10.40 of Title 37 of the Code of Federal Regulation states, "[a] practitioner shall not withdraw from employment in a proceeding before the Office without permission from the Office[.]" More specifically, 37 CFR 10.40 states, "[i]f paragraph (b) of this section is not applicable, a practitioner may not request permission to withdraw in matter pending before the Office unless such request or such withdrawal is" for one the permissive reasons listed in 37 CFR 10.40(c). The reasons set forth in the request, "Leaving the employ of Customer No. 26288", do not meet any of the conditions set forth in 37 CFR 10.40.

All future communications from the Office will continue to be directed to the above-listed address until otherwise notified by applicant.

Telephone inquiries concerning this decision should be directed to Patricia Volpe at 571-272-6825.

David Bucci
Petitions Examiner
Office of Petitions

UNITED STATES PATENT AND TRADEMARK OFFICE

Commissioner for Patents
United States Patent and Trademark Office
P.O. Box 1450
Alexandria, VA 22313-1450
www.uspto.gov

JUN 28 2004

BANNER & WITCOFF
1001 G STREET N W
SUITE 1100
WASHINGTON DC 20001

In re Application of	:	
Matthew N. Rask	:	
Serial No.: 29/203,120	:	DECISION ON PETITION
Filed: April 9, 2004	:	
For: Portion Of A Shoe Midsole	:	

This is in response to the petition applicant filed on June 7, 2004 to make the above-identified application special under the provisions of 37 CFR 1.102(d).

Applicant has satisfied the provisions set forth in M.P.E.P. 708.02, VIII, thus the petition is **GRANTED**.

The application will be forwarded to the examiner for action on the merits commensurate with this decision.

Should there be any questions with regard to this letter please contact John Kittle by letter addressed to the Director, Technology Center 3700/2900, P.O. Box 1450 Alexandria, VA 22313-1450, or by telephone at (703) 308-0873 or by facsimile transmission at (703) 308-3139.

John E. Kittle
Director
Technology Center 3700/2900

UNITED STATES PATENT AND TRADEMARK OFFICE

Commissioner for Patents
United States Patent and Trademark Office
P.O. Box 1450
Alexandria, VA 22313-1450
www.uspto.gov

JUN 07 2004

BANNER & WITCOFF
1001 G STREET N W
SUITE 1100
WASHINGTON DC 20001

In re Application of	:	
Matthew N. Rask	:	
Serial No.: 29/203,121	:	DECISION ON PETITION
Filed: April 9, 2004	:	
For: Portion Of A Shoe Upper	:	

This is in response to the petition applicant filed on June 7, 2004 to make the above-identified application special under the provisions of 37 CFR 1.102(d).

Applicant has satisfied the provisions set forth in M.P.E.P. 708.02, VIII, thus the petition is **GRANTED**.

The application will be forwarded to the examiner for action on the merits commensurate with this decision.

Should there be any questions with regard to this letter please contact John Kittle by letter addressed to the Director, Technology Center 3700/2900, P.O. Box 1450 Alexandria, VA 22313-1450, or by telephone at (703) 308-0873 or by facsimile transmission at (703) 308-3139.

John E. Kittle
Director
Technology Center 3700/2900

UNITED STATES PATENT AND TRADEMARK OFFICE

Commissioner for Patents
United States Patent and Trademark Office
P.O. Box 1450
Alexandria, VA 22313-1450
www.uspto.gov
DIW 09-04

MARK MONTAGUE
COWAN, LIEBOWITZ & LATMAN, P.C.
1133 AVENUE OF THE AMERICAS
NEW YORK NY 10031-6799

COPY MAILED

SEP 2 1 2004

OFFICE OF PETITIONS

In re Application of	:	
Lion et al.	:	
Application No. 29/203,180	:	DECISION ON PETITION
Filed: 8 April, 2004	:	
Attorney Docket No. 25402-010	:	

This is a decision on the petition filed on 25 August, 2004, which is treated as a petition filed under 37 CFR 1.53 requesting that the above-identified application, including three (3) sheets of drawings containing Figures 19-24 described in the specification, be accorded a filing date of 8 April, 2004.

The petition is granted.

On 8 April, 2004, the application was filed.

On 4 August, 2004, Initial Patent Examination Division mailed a Notice of Omitted Item(s) in a Nonprovisional Application, stating that the application had been accorded a filing date 8 April, 2004, but that Figures 19-24 described in the specification appeared to have been omitted. A two (2) month period for reply was set.

In response, on 25 August, 2004, the present petition and a copy of one (3) sheets of drawings containing Figures 19-24, were filed. Petitioner argues that the three (3) drawing sheets were filed with the other application papers on 8 April, 2004, but were subsequently misplaced in the U.S. Patent and Trademark Office (Office). In support, a copy of petitioner's postcard receipt was supplied with the present petition. The postcard receipt shows an Office date stamp of 04/08/04, the above-identified application number, and identifies the application by

the inventor's name, invention title, and attorney docket number, and acknowledges receipt of, *inter alia*, "drawings (12 pages)". Petitioner requests that the application, including the three (3) sheet of drawings, be accorded a filing date of 8 April, 2004.

A review of the record reveals that nine (9) sheets of drawings received on 8 April, 2004, are located among the application papers in the official file. No sheets of drawings containing Figures 19-24 are located among the application papers received on 8 April, 2004. However, the evidence is convincing that the application papers deposited on 8 April, 2004, included three (3) sheet of drawings containing Figures 19-24, which were subsequently misplaced in the Office. Therefore, the application, including the three (3) sheets of drawings supplied with the present petition, is entitled to a filing date of 8 April, 2004.

In view of the above, the petition is granted. The Notice mailed on 4 August, 2004 is withdrawn. The petition fee of $130.00 will be credited to counsel's deposit account, No. 03-3415.

The application will be processed with the copy of the three (3) sheet of drawings supplied on 25 August, 2004, as a part of the original disclosure.

The application is being returned to Initial Patent Examination Division for further processing with a filing date of 8 April, 2004, using the application papers filed on that date, and the copy of three (3) sheets of drawings described in the specification supplied with the present petition, and for an indication in Office records that 12 sheets of drawings were present on filing.

Telephone inquiries should be directed to the undersigned at 703-308-6918.

D Wood

Douglas I. Wood
Senior Petitions Attorney
Office of Petitions

UNITED STATES PATENT AND TRADEMARK OFFICE

Commissioner for Patents
United States Patent and Trademark Office
P.O. Box 1450
Alexandria, VA 22313-1450
www.uspto.gov

MAY 20 2004

BANNER & WITCOFF
ELEVENTH FLOOR
1001 G STREET N W
WASHINGTON DC 20001

In re Application of	:	
Aaron Alexander C. Cooper	:	
Serial No.: 29/203,189	:	DECISION ON PETITION
Filed: April 12, 2004	:	
For: Portion Of A Shoe Upper	:	

This is in response to the petition applicant filed on May 3, 2004 to make the above-identified application special under the provisions of 37 CFR 1.102(d).

Applicant has satisfied the provisions set forth in M.P.E.P. 708.02, VIII, thus the petition is **GRANTED**.

The application will be forwarded to the examiner for action on the merits commensurate with this decision.

Should there be any questions with regard to this letter please contact John Kittle by letter addressed to the Director, Technology Center 3700/2900, P.O. Box 1450 Alexandria, VA 22313-1450, or by telephone at (703) 308-0873 or by facsimile transmission at (703) 308-3139.

John E. Kittle

John E. Kittle
Director
Technology Center 3700/2900

UNITED STATES PATENT AND TRADEMARK OFFICE

Commissioner for Patents
United States Patent and Trademark Office
Washington, D.C. 20231
www.uspto.gov

BUCHANAN INGERSOLL PC
(INCLUDING BURNS, DOANE, SWECKER & MATHIS)
POST OFFICE BOX 1404
ALEXANDRIA VA 22313-1404

COPY MAILED

FEB 17 2006

OFFICE OF PETITIONS

In re Application of :
Yves Marmier et al. :
Application No. 29/203,270 :
Filed: April 13, 2004 :
Attorney Docket No. 032498-026 :

ON PETITION

This is a decision on the petition filed January 17, 2006, to withdraw the holding of abandonment , which is treated under 37 CFR 1.181(b), in accordance with the reasoning of the decision in Delgar Inc. v. Schuyler, 172 USPQ 513.

The petition is **GRANTED**.

This application became abandoned for failure to pay the issue fee on or before August 2, 2005 as was required by the Notice of Allowance mailed May 2, 2005. This application therefore became abandoned on August 3, 2005. Accordingly, a Notice of Abandonment was mailed November 17, 2005.

The file record discloses that the Notice of Allowance was mailed to the address of record. However, petitioner contends that it was not received. In support, petitioner indicates that a search of the file jacket revealed that the Notice was not received and submits copies of pages from the docketing system, wherein receipt of the Notice of Allowance would have been entered, had it been received to substantiate the claim. The statement and attachments corroborate non-receipt of the Notice of Allowance.

In view of the facts set forth in the petition, it is concluded that the Notice of Allowance was never received. Accordingly, the holding of abandonment is withdrawn. No petition fee is due and none will be charged.

This application is being forwarded to the Technology Center 2915 for a remailing of the Notice of Allowance and Notice of Allowability.

Telephone inquiries concerning this matter should be directed to the undersigned Petitions Attorney at (571) 272-3212.

Patricia Faison-Ball

Patricia Faison-Ball
Senior Petitions Attorney
Office of Petitions

UNITED STATES PATENT AND TRADEMARK OFFICE

Commissioner for Patents
United States Patent and Trademark Office
P.O. Box 1450
Alexandria, VA 22313-1450
www.uspto.gov

Harbin King & Klima
500 Ninth Street, SE
Washington DC 20003

COPY MAILED

JAN 04 2008

OFFICE OF PETITIONS

In re Patent No. :
D502871 :
Application No. 29/203,279 :
Filing Date: April 13, 2004 :
Issue Date: March 15, 2005 :
Attorney Docket No. 2545-0448 :

DECISION GRANTING PETITION

This is a decision on the petition under 37 CFR 1.182, filed December 10, 2007, requesting issuance of duplicate Letters of Patent for the above-identified patent.

The petition is **granted**.

The file record discloses that the above-cited application matured into U.S. Patent No. D502871 on March 15, 2005. Petitioner contends, however, that the patent was received but lost thereafter.

In view of the facts set forth in the petition, it is concluded that the original Letters of Patent was lost after receipt. The Office of Patent Publications is directed to issue duplicate Letters of Patent.

Any questions concerning this decision may be directed to the undersigned at (571)272-3222. Any questions concerning issuance of the duplicate Letter of Patent should be directed to Krystal Paige at (703)308-9250.

A copy of this decision is being forwarded to the Office of Patent Publications for issuance of a duplicate Letter of Patent.

Kenya A. McLaughlin
Petitions Attorney
Office of Petitions

cc: Krystal Paige, P/OPPD, Crystal Park 3-910 (Fax 571-270-9937)

UNITED STATES PATENT AND TRADEMARK OFFICE

Commissioner for Patents
United States Patent and Trademark Office
P.O. Box 1450
Alexandria, VA 22313-1450
www.uspto.gov

9/22/05

ROSENBERG, KLEIN & LEE
3458 ELLICOTT CENTER DRIVE-SUITE 101
ELLICOTT CITY MD 21043

In re Application of
James Glenn Mohundro
Serial No.: 29/203,366
Filed: April 1, 2004
Attorney Docket No.: MR2049-481

: PETITION DECISION

This is a decision on applicant's petition to revive patent application under 37 CFR 1.137(b), filed August 5, 2005, to revive an unintentionally abandoned application.

This application became abandoned for failure to respond to the Notice of Allowance mailed December 27, 2004, which set a three-month statutory period to submit the Issue Fee and formal drawings. As no response was received by March 28, 2005, a Notice of Abandonment was mailed May 5, 2005. Applicant then filed this petition.

A grantable petition for a design application under 37 CFR 1.137(b), as revised December 1, 1997, requires four items: (1) a petition and petition fee; (2) a complete response if not earlier made; (3) a statement that the entire period of delay in prosecution was unintentional; and (4) a terminal disclaimer and disclaimer fee.

Applicant's petition is **GRANTED**.

The application will be forwarded to Publication Division for printing as a patent in due course.

Should there be any questions with respect to this decision, please contact Sandra Morris; by mail addressed to: Director, Technology Center 1700/2900, P.O. Box 1450, Alexandria, VA 22313-1450; or by telephone at (571) 272-2622.

Jacqueline M. Stone

Jacqueline Stone
Director, Technology Center 1700/2900

UNITED STATES PATENT AND TRADEMARK OFFICE

Commissioner for Patents
United States Patent and Trademark Office
P.O. Box 1450
Alexandria, VA 22313-1450
www.uspto.gov

KEVIN G. YOUNG
437-A IDLEWILD DRIVE
HOUMA LA 70364

COPY MAILED

NOV 0 4 2005

OFFICE OF PETITIONS

In re Application of :
Kevin G. Young et al. :
Application No. 29/203,430 : ON PETITION
Filed: April 15, 2004 :
Attorney Docket No.: NRL870 :

This is a decision on the petition filed July 27, 2005 under 37 CFR 1.137(b),[1] to revive the above-identified application.

The petition under 37 CFR 1.137 (b) is **DISMISSED**.

Any further petition to revive the above-identified application must be submitted within TWO (2) MONTHS from the mail date of this decision. Extensions of time under 37 CFR 1.136(b) are permitted. The reconsideration request should include a cover letter entitled "Petition under 37 CFR 1.137." This is **not** final agency action within the meaning of 5 U.S.C. § 704.

This application became abandoned June 24, 2005 for failure to timely pay the issue fee on or before June 23, 2005. The instant petition and this decision precede the mailing of the Notice of Abandonment.

The petition does not satisfy requirement (4) of the regulation.

Petitioner must submit a Terminal Disclaimer with any renewed petition since this is a

---

[1] Effective December 1, 1997, the provisions of 37 CFR 1.137(b) now provide that where the delay in reply was unintentional, a petition may be filed to revive an abandoned application or a lapsed patent pursuant to 37 CFR 1.137(b). A grantable petition filed under the provisions of 37 CFR 1.137(b) must be accompanied by:

(1) the required reply, unless previously filed. In a nonprovisional application abandoned for failure to prosecute, the required reply may be met by the filing of a continuing application. In a nonprovisional application filed on or after June 8, 1995, and abandoned for failure to prosecute, the required reply may also be met by the filing of a request for continued examination in compliance with § 1.114. In an application or patent, abandoned or lapsed for failure to pay the issue fee or any portion thereof, the required reply must be the payment of the issue fee or any outstanding balance thereof.

(2) the petition fee as set forth in 37 CFR 1.17(m);

(3) a statement that the entire delay in filing the required reply from the due date for the reply until the filing of a grantable petition pursuant to 37 CFR 1.137(b) was unintentional. The Commissioner may required additional information where there is a question whether the delay was unintentional; and

(4) any terminal disclaimer (and fee as set forth in 37 CFR 1.20(d)) required pursuant to 37 CFR 1.137(c)).

design application. **Petitioner should note that submission of any renewed petition without the required reply will be construed as intentional delay.**

Further correspondence with respect to this matter should be addressed as follows:

By mail: Mail Stop Petitions
Commissioner for Patents
P.O. Box 1450
Alexandria VA 22313-1450

By FAX: (571) 273-8300
ATTN: Office of Petitions

Telephone inquiries concerning this matter may be directed to the undersigned Petitions Attorney at (571) 272-3212.

Patricia Faison-Ball

Patricia Faison-Ball
Senior Petitions Attorney
Office of Petitions

UNITED STATES PATENT AND TRADEMARK OFFICE

Commissioner for Patents
United States Patent and Trademark Office
P.O. Box 1450
Alexandria, VA 22313-1450
www.uspto.gov

COPY MAILED
OCT 2 0 2006
OFFICE OF PETITIONS

DAVID A. LINGBECK
P.O. BOX 500
ST. MICHAEL MN 55376

In re Application of
Kevin G. Young et al.
Application No. 29/203,430
Filed: April 15, 2004
Attorney Docket No.: NRL870

ON PETITION

This is a decision on the correspondences filed April 12, 2006, September 19, 2006 and September 27, 2006 which are treated as a renewed petition uder 37 CFR 1.137(b),[1] to revive the above-identified application.

The petition under 37 CFR 1.137 (b) is **GRANTED**.

This application became abandoned June 24, 2005 for failure to timely pay the issue fee on or before June 23, 2005. Preceding the mailing of the Notice of Abandonment, a petition to revive was filed July 27, 2005 authorizing the payment of the issue fee and petition fee but was dismissed in a decision mailed November 4, 2005 because the petition was not accompanied by a terminal disclaimer.

All other requirements of 37 CFR 1.137(b), including the filing of a terminal disclaimer, having now been met, this matter is being referred to the Publishing Division.

Telephone inquiries concerning this matter may be directed to the undersigned Petitions Attorney at (571) 272-3212.

Patricia Faison-Ball

Patricia Faison-Ball
Senior Petitions Attorney
Office of Petitions

---

[1] Effective December 1, 1997, the provisions of 37 CFR 1.137(b) now provide that where the delay in reply was unintentional, a petition may be filed to revive an abandoned application or a lapsed patent pursuant to 37 CFR 1.137(b). A grantable petition filed under the provisions of 37 CFR 1.137(b) must be accompanied by:

(1) the required reply, unless previously filed. In a nonprovisional application abandoned for failure to prosecute, the required reply may be met by the filing of a continuing application. In a nonprovisional application filed on or after June 8, 1995, and abandoned for failure to prosecute, the required reply may also be met by the filing of a request for continued examination in compliance with § 1.114. In an application or patent, abandoned or lapsed for failure to pay the issue fee or any portion thereof, the required reply must be the payment of the issue fee or any outstanding balance thereof.

(2) the petition fee as set forth in 37 CFR 1.17(m);

(3) a statement that the entire delay in filing the required reply from the due date for the reply until the filing of a grantable petition pursuant to 37 CFR 1.137(b) was unintentional. The Commissioner may required additional information where there is a question whether the delay was unintentional; and

(4) any terminal disclaimer (and fee as set forth in 37 CFR 1.20(d)) required pursuant to 37 CFR 1.137(c)).

UNITED STATES PATENT AND TRADEMARK OFFICE

UNITED STATES DEPARTMENT OF COMMERCE
United States Patent and Trademark Office
Address: COMMISSIONER FOR PATENTS
P.O. Box 1450
Alexandria, Virginia 22313-1450
www.uspto.gov

APPLICATION NO.	FILING DATE	FIRST NAMED INVENTOR	ATTORNEY DOCKET NO.	CONFIRMATION NO.
29/203,456	04/14/2004	Fergus Johnathan Ardern	27722 USA	7223

23307 7590 05/27/2005

SYNNESTVEDT & LECHNER, LLP
2600 ARAMARK TOWER
1101 MARKET STREET
PHILADELPHIA, PA 191072950

EXAMINER
CLARK, DORIS

ART UNIT	PAPER NUMBER
2914	

DATE MAILED: 05/27/2005

Please find below and/or attached an Office communication concerning this application or proceeding.

UNITED STATES PATENT AND TRADEMARK OFFICE

Commissioner for Patents
United States Patent and Trademark Office
P.O. Box 1450
Alexandria, VA 22313-1450
www.uspto.gov

5/27/05

In re Application of	:	
Fergus Johnathan Ardern et. al.	:	
Serial Number : 29/203,456	:	WITHDRAWAL
Filed : April 14, 2004	:	FROM
For : CONSTRUCTIONAL OR GROUND	:	ISSUE
COVERING PANEL	:	

The purpose of this communication is to inform you that the above-identified application is being withdrawn from issue pursuant to 37 CFR 1.313.

The application is being withdrawn to permit reopening of prosecution. The reasons therefore will be communicated to you by the examiner.

PTO records reveal that the issue fee has not been paid. If the issue fee has been submitted, the applicant may request a refund or may request that the fee be credited to a deposit account. However, applicant may wait until the application is either again found allowable or held abandoned. If the application is allowed, upon receipt of a new Notice of Allowance and Issue Fee Due, applicant may request that the previously submitted issue fee to applied toward payment of the issue fee in the amount identified on the new Notice of Allowance and Issue Fee Due. If the application is abandoned, applicant may request either a refund or a credit to a deposit account.

The application is being forwarded to the examiner for action. Telephone inquires may be directed to Louis Zarfas at 571-272-2660.

JMstone

Jacqueline M. Stone, Director
Technology Center 1700
Chemical and Materials Engineering

SYNNESTVEDT & LECHNER, LLP
2600 Aramark Tower
1101 Market Street
Philadelphia, PA 19107-2950

UNITED STATES PATENT AND TRADEMARK OFFICE

Commissioner for Patents
United States Patent and Trademark Office
P.O. Box 1450
Alexandria, VA 22313-1450
www.uspto.gov

JUN 2 1 2004

WELSH & FLAXMAN LLC
2450 CRYSTAL DRIVE, SUITE 112
ARLINGTON, VA 22202

In re Application of	:	
Anthony J. Antonious	:	
Serial No.: 29/203,479	:	DECISION ON PETITION
Filed: April 15, 2004	:	
For: Metalwood Type Golf Club Head	:	

This is in response to applicants' petition filed April 15, 2004, to make the above-identified application special under the provisions of 37 CFR 1.102(c), based on the age of the applicant.

Applicant has satisfied the provisions set forth in M.P.E.P. 708.02, IV. Therefore the petition is **GRANTED**.

The application will be forwarded to the examiner for action on the merits commensurate with this decision.

Should there be any questions with regard to this letter please contact John Kittle by letter addressed to the Director, Technology Center 3700/2900, Washington, DC 20231, or by telephone at (703) 308-0873 or by facsimile transmission at (703) 308-3139.

John E. Kittle

John E. Kittle
Director,
Technology Center 3700/2900

UNITED STATES PATENT AND TRADEMARK OFFICE

Commissioner for Patents
United States Patent and Trademark Office
P.O. Box 1450
Alexandria, VA 22313-1450
www.uspto.gov

THE MATTHEWS FIRM
2000 BERING DRIVE
SUITE 700
HOUSTON, TX 77057

COPY MAILED

JUL 23 2008

OFFICE OF PETITIONS

In re Application of	:	
Bruce M. Grant	:	
Application No. 29/203,484	:	ON PETITION
Filed: April 14, 2004	:	
Attorney Docket No. Grant-001	:	

This is a decision on the petition under 37 CFR 1.137(b), filed on December 21, 2007, to revive the above-identified application.

The application became abandoned for failure to file a proper reply to the non-final Office action mailed December 19, 2005. A Notice of Abandonment was mailed on January 9, 2007.

The petition satisfies the requirements of 37 CFR 1.137(b) in that petitioner has supplied (1) the reply in the form of an amendment, four sheets of replacement drawings containing Figures 1-5, and $65 for the filing of a terminal disclaimer; (2) the petition fee of $770; and (3) a proper statement of unintentional delay. Therefore, the petition is **GRANTED**.

The Office acknowledges receipt of $525 for a three months extension of time filed on December 21, 2007. However, an extension of time under 37 CFR 1.136 must be filed prior to the expiration of the maximum extendable period for reply. See In re Application of S., 8 USPQ2d 1630, 1631 (Comm'r. Pats. 1988). Accordingly, since the $525 extension of time was subsequent to the maximum extendable period for reply, this fee is unnecessary and will be credited to petitioner's deposit account.

The terminal disclaimer under 37 CFR 1.137(d), filed December 21, 2007, has been accepted and made of record. Any continuing application filed from this application must contain a copy of the terminal disclaimer. The copy of the terminal disclaimer must be filed with a cover letter requesting the terminal disclaimer be recorded on the continuing application. A copy of this decision should be attached to the cover letter.

This application file is being referred to Technology Center Art Unit 2915 for further processing.

Telephone inquiries concerning this decision should be directed to the undersigned at (571) 272-3226.

Andrea Smith
Petitions Examiner
Office of Petitions

UNITED STATES PATENT AND TRADEMARK OFFICE

Commissioner for Patents
United States Patent and Trademark Office
P.O. Box 1450
Alexandria, VA 22313-1450
www.uspto.gov

SNELL & WILMER LLP
SUITE 1200
1920 MAIN STREET
IRVINE CA 92614-7230

COPY MAILED

MAY 1 3 2008

OFFICE OF PETITIONS

In re
Nghiem Duy Tran
Application No. 29/203,504
Filed: April 15, 2004
Patent No. D501,080 S
Issued: January 25, 2005
Attorney Docket No. 42565-3400

DECISION

This is a decision on the fee deficiency submission under 37 CFR 1.28(c), filed November 8, 2007.

The fee deficiency submission under 37 CFR 1.28, representing the difference between the small entity and large entity application filing fee, search fee, examination fee, and issue fee is hereby **accepted**.

The change of status to a large entity has been entered and made of record.

Telephone inquiries concerning this matter may be directed to the undersigned at (571) 272-3207.

Cliff Congo
Petitions Attorney
Office of Petitions

UNITED STATES PATENT AND TRADEMARK OFFICE

Commissioner for Patents
United States Patent and Trademark Office
P.O. Box 1450
Alexandria, VA 22313-1450
www.uspto.gov

SNELL & WILMER LLP (OC)
600 ANTON BOULEVARD
SUITE 1400
COSTA MESA CA 92626

COPY MAILED

DEC 0 7 2007

OFFICE OF PETITIONS

In re Patent No. D508,193	:	
Issue Date: August 9, 2005	:	
Application No. 29/203,537	:	NOTICE
Filed: April 15, 2004	:	
Attorney Docket No. 42565-3500	:	

This is a notice regarding your request for acceptance of a fee deficiency submission under 37 CFR 1.28. On September 1, 1998, the Court of Appeals for the Federal Circuit held that 37 CFR 1.28(c) is the sole provision governing the time for correction of the erroneous payment of the issue fee as a small entity. **See DH Technology v. Synergystex International, Inc. 154 F.3d 1333, 47 USPQ2d 1865 (Fed. Cir. Sept. 1, 1998).**

The Office no longer investigates or rejects original or reissue applications under 37 CFR 1.56. **1098 Off. Gaz. Pat. Office 502 (January 3, 1989).** Therefore, nothing in this Notice is intended to imply that an investigation was done.

Your fee deficiency submission under 37 CFR 1.28 is hereby **ACCEPTED**.

This patent is no longer entitled to small entity status. Accordingly, all future fees paid in this patent must be paid at the large entity rate.

Liana Walsh
Petitions Examiner
Office of Petitions

UNITED STATES PATENT AND TRADEMARK OFFICE

Commissioner for Patents
United States Patent and Trademark Office
P.O. Box 1450
Alexandria, VA 22313-1450
www.uspto.gov

SNELL & WILMER LLP (OC)
600 ANTON BOULEVARD
SUITE 1400
COSTA MESA CA 92626

COPY MAILED

DEC 0 7 2007

OFFICE OF PETITIONS

In re Patent No. D518,952	:	
Issue Date: April 18, 2006	:	
Application No. 29/203,538	:	NOTICE
Filed: April 15, 2004	:	
Attorney Docket No. 42565-3600	:	

This is a notice regarding your request for acceptance of a fee deficiency submission under 37 CFR 1.28. On September 1, 1998, the Court of Appeals for the Federal Circuit held that 37 CFR 1.28(c) is the sole provision governing the time for correction of the erroneous payment of the issue fee as a small entity. **See DH Technology v. Synergystex International, Inc. 154 F.3d 1333, 47 USPQ2d 1865 (Fed. Cir. Sept. 1, 1998).**

The Office no longer investigates or rejects original or reissue applications under 37 CFR 1.56. **1098 Off. Gaz. Pat. Office 502 (January 3, 1989).** Therefore, nothing in this Notice is intended to imply that an investigation was done.

Your fee deficiency submission under 37 CFR 1.28 is hereby **ACCEPTED**.

This patent is no longer entitled to small entity status. Accordingly, all future fees paid in this patent must be paid at the large entity rate.

Liana Walsh
Petitions Examiner
Office of Petitions

UNITED STATES PATENT AND TRADEMARK OFFICE

Commissioner for Patents
United States Patent and Trademark Office
P.O. Box 1450
Alexandria, VA 22313-1450
www.uspto.gov

ALBIN H. GESS
SNELL & WILMER L.L.P.
600 ANTON BOULEVARD, SUITE 1400
COSTA MESA, CA 92626-7689

COPY MAILED

APR 0 9 2008

OFFICE OF PETITIONS

In re Patent No. D513956 :
Issue Date: January 31, 2006 :
Application No. 29/203,555 : NOTICE
Filed: April 15, 2004 :
Attorney Docket No. 42565-3200

This is a notice regarding your request for acceptance of a fee deficiency submission under 37 CFR 1.28. On September 1, 1998, the Court of Appeals for the Federal Circuit held that 37 CFR 1.28(c) is the sole provision governing the time for correction of the erroneous payment of the issue fee as a small entity. **See DH Technology v. Synergystex International, Inc. 154 F.3d 1333, 47 USPQ2d 1865 (Fed. Cir. Sept. 1, 1998).**

The Office no longer investigates or rejects original or reissue applications under 37 CFR 1.56. **1098 Off. Gaz. Pat. Office 502 (January 3, 1989).** Therefore, nothing in this Notice is intended to imply that an investigation was done.

Your fee deficiency submission under 37 CFR 1.28 is hereby **ACCEPTED**.

Inquiries related to this communication should be directed to Irvin Dingle at (571) 272-3210.

Irvin Dingle
Petitions Examiner
Office of Petitions

UNITED STATES PATENT AND TRADEMARK OFFICE

Commissioner for Patents
United States Patent and Trademark Office
P.O. Box 1450
Alexandria, VA 22313-1450
www.uspto.gov

SNELL & WILMER LLP (OC)
600 ANTON BOULEVARD
SUITE 1400
COSTA MESA CA 92626

COPY MAILED

FEB 2 5 2008

OFFICE OF PETITIONS

In re Patent No. D509123	:	
Issued: 09/06/2005	:	
Application No. 29/203,557	:	NOTICE
Filed: 04/15/2004	:	
Attorney Docket No. 42565-3300	:	

This is a notice regarding your request for acceptance of a fee deficiency submission under 37 CFR 1.28, filed November 8, 2007.

The Office no longer investigates or rejects original or reissue patent under 37 CFR 1.56. **1098 Off. Gaz. Pat. Office 502 (January 3, 1989)**. Therefore, nothing in this Notice is intended to imply that an investigation was done.

Your fee deficiency submission under 37 CFR 1.28 is hereby **ACCEPTED**.

This patent is no longer entitled to small entity status. Accordingly, all future fees paid in this patent must be paid at the large entity rate.

The fee deficiency of $690.00 will be charged to the Deposit Account as requested.

Inquiries related to this communication should be directed to the undersigned at (571) 272-3211.

C. T. Donnell

Christina Tartera Donnell
Senior Petitions Attorney
Office of Petitions

SPE RESPONSE FOR CERTIFICATE OF CORRECTION

Paper No.: _____

DATE : 10-31-07

TO SPE OF : ART UNIT 2913

SUBJECT : Request for Certificate of Correction for Appl. No.: 29/603559 Patent No.: D592280

Please respond to this request for a certificate of correction within 7 days.

Please review the requested changes/corrections as shown in the **COCIN** document(s) in the IFW application image. No new matter should be introduced, nor should the scope or meaning of the claims be changed.

Should drawings be approved

Please complete the response (see below) and forward the completed response to scanning using document code **COCX**.

Ennis Young
Certificates of Correction Branch
703-308-9390 ext. 117

Thank You For Your Assistance

The request for issuing the above-identified correction(s) is hereby:

Note your decision on the appropriate box.

- [x] Approved — All changes apply.
- [ ] Approved in Part — Specify below which changes do not apply.
- [ ] Denied — State the reasons for denial below.

Comments: _____

Caron D. Weyman
SPE

293
Art Unit

UNITED STATES PATENT AND TRADEMARK OFFICE

Commissioner for Patents
United States Patent and Trademark Office
P.O. Box 1450
Alexandria, VA 22313-1450
www.uspto.gov

JUN 2 1 2004

BANNER & WITCOFF
1001 G STREET N W
SUITE 1100
WASHINGTON DC 20001

In re Application of	:	
John T. Stites et al	:	
Serial No.: 29/203,561	:	DECISION ON PETITION
Filed: April 16, 2004	:	
For: Bottom Portion of a Golf Club Head	:	
For A Putter	:	

This is in response to the petition applicant filed on April 16, 2004 to make the above-identified application special under the provisions of 37 CFR 1.102(d).

Applicant has satisfied the provisions set forth in M.P.E.P. 708.02, VIII, thus the petition is **GRANTED**.

The application will be forwarded to the examiner for action on the merits commensurate with this decision.

Should there be any questions with regard to this letter please contact John Kittle by letter addressed to the Director, Technology Center 3700/2900, P.O. Box 1450 Alexandria, VA 22313-1450, or by telephone at (703) 308-0873 or by facsimile transmission at (703) 308-3139.

John E. Kittle

John E. Kittle
Director
Technology Center 3700/2900

UNITED STATES PATENT AND TRADEMARK OFFICE

Commissioner for Patents
United States Patent and Trademark Office
P.O. Box 1450
Alexandria, VA 22313-1450
www.uspto.gov

JUN 21 2004

BANNER & WITCOFF
1001 G STREET N W
SUITE 1100
WASHINGTON DC 20001

In re Application of	:	
John T. Stites et al	:	
Serial No.: 29/203,562	:	DECISION ON PETITION
Filed: April 16, 2004	:	
For: Bottom Portion of a Golf Club Head	:	
For A Putter	:	

This is in response to the petition applicant filed on April 16, 2004 to make the above-identified application special under the provisions of 37 CFR 1.102(d).

Applicant has satisfied the provisions set forth in M.P.E.P. 708.02, VIII, thus the petition is **GRANTED**.

The application will be forwarded to the examiner for action on the merits commensurate with this decision.

Should there be any questions with regard to this letter please contact John Kittle by letter addressed to the Director, Technology Center 3700/2900, P.O. Box 1450 Alexandria, VA 22313-1450, or by telephone at (703) 308-0873 or by facsimile transmission at (703) 308-3139.

John E. Kittle
Director
Technology Center 3700/2900

UNITED STATES PATENT AND TRADEMARK OFFICE

Commissioner for Patents
United States Patent and Trademark Office
P.O. Box 1450
Alexandria, VA 22313-1450
www.uspto.gov

DENNISON SCHULTZ DOUGHERTY & MACDONALD
1727 KING STREET, SUITE 105
ALEXANDRIA, VA 22314

COPY MAILED

JUL 2 2 2005

OFFICE OF PETITIONS

In re Patent No. D503,635 :
Issue Date: April 5, 2005 :
Application No. 29/203,570 : ON PETITION
Filed: April 16, 2004 :
Attorney Docket No. 04043D :

This is a decision on the petition under 37 CFR 1.183, filed May 20, 2005, which is being treated as a petition under 37 CFR 3.81(b)[1] to accept the correction of the assignee on the front page of the above-identified patent.

The petition is **dismissed**.

Petitioner requests issuance of a certificate of correction in the name of "Stabila Messgerate Gustave Ulrich GmbH." However, Office PALM computer database assignment records reflect that an assignment in the name of the assignee sought by the certificate of correction was recorded as Stabila Messgerate Gustav Ulrich Gmbh. Accordingly, if reconsideration of this decision is requested, petitioner must supply either the reel and frame number where the recorded assignment appears or supply a copy of the recorded assignment. If the assignment was not recorded, or submitted for recordation, prior to issuance of this patent, a certificate of correction would not be in order. Note MPEP Section 307.

Further correspondence with respect to this matter should be addressed as follows:

By mail: Mail Stop PETITIONS
Commissioner for Patents
Post Office Box 1450
Alexandria, VA 22313-1450

By hand: Customer Service Window
Randolph Building

[1] *See* Official Gazette of June 22, 2004

401 Dulany Street
Alexandria, VA 22314

By fax: (571) 273-8300
ATTN: Office of Petitions

Telephone inquiries concerning this decision should be directed to Wan Laymon at (571) 272-3220.

Wan Laymon

Wan Laymon
Petitions Examiner
Office of Petitions
Office of the Deputy Commissioner
for Patent Examination Policy

UNITED STATES PATENT AND TRADEMARK OFFICE

COMMISSIONER FOR PATENTS
UNITED STATES PATENT AND TRADEMARK OFFICE
P.O. BOX 1450
ALEXANDRIA, VA 22313-1450
www.uspto.gov

6/24/05

BRUCE H. TROXELL
SUITE 1404
5205 LEESBURG PIKE
FALLS CHURCH, VA 22041

In re Application of
Wallace Woo
Serial No.: 29/203,662
Filed: April 19, 2004
Attorney Docket No.: BHT-3092-427

: PETITION DECISION

This is in response to applicant's Petition to Withdraw Holding of Abandonment under 37 CFR 1.181, filed February 9, 2005, based on having responded to the Office action.

This petition is **GRANTED.**

This application was held abandoned based on applicant's failure to fully respond to the Notice of Allowance mailed August 11, 2004. The Issue fee was received November 2, 2004; however, as no formal drawings were submitted by November 12, 2004, a Notice of Abandonment was mailed January 20, 2005. This petition followed.

Applicant has stated that a response was timely filed, and has submitted copies of the Issue Fee transmittal and formal drawings with a Post Card receipt, date stamped by the Office November 2, 2004. Applicant's assistance in remailing the formal drawings on April 4, 2005, was appreciated.

The application will be forwarded to Publication Division for printing as a patent in due course.

Should there be any questions with respect to this decision, please contact Sandra Morris; by mail addressed to: Director, Technology Center 1700/2900, P.O. Box 1450, Alexandria, VA 22313-1450; or by telephone at (571) 272-2622 or by facsimile transmission at (571) 273-2622.

JMStone

Jacqueline Stone
Director, Technology Center 1700/2900

UNITED STATES PATENT AND TRADEMARK OFFICE

Commissioner for Patents
United States Patent and Trademark Office
P.O. Box 1450
Alexandria, VA 22313-1450
www.uspto.gov

REISING, ETHINGTON, BARNES,
KISSELLE & LEARMAN, P.C.
5291 Colony Drive North
Saginaw MI 48603

COPY MAILED

NOV 04 2005

OFFICE OF PETITIONS

In re Application of :
Matias Rodriguez Jr. :
Application No. 29/203,725 : ON PETITION
Filed: April 19, 2004 :
Attorney Docket No.: 7387.3001.001 :

This is a decision on the petition filed September 6, 2005 under 37 CFR 1.137(b),[1] to revive the above-identified application.

The petition under 37 CFR 1.137 (b) is **DISMISSED**.

Any further petition to revive the above-identified application must be submitted within TWO (2) MONTHS from the mail date of this decision. Extensions of time under 37 CFR 1.136(b) are permitted. The reconsideration request should include a cover letter entitled "Petition under 37 CFR 1.137." This is **not** final agency action within the meaning of 5 U.S.C. § 704.

This application became abandoned June 11, 2005 for failure to file formal drawings on or before June 10, 2005, as required by the Notice of Allowability mailed March 10, 2005. the issue fee on or before June 23, 2005. Accordingly, a Notice of Abandonment was mailed August 17, 2005.

---

[1]Effective December 1, 1997, the provisions of 37 CFR 1.137(b) now provide that where the delay in reply was unintentional, a petition may be filed to revive an abandoned application or a lapsed patent pursuant to 37 CFR 1.137(b). A grantable petition filed under the provisions of 37 CFR 1.137(b) must be accompanied by:

(1) the required reply, unless previously filed. In a nonprovisional application abandoned for failure to prosecute, the required reply may be met by the filing of a continuing application. In a nonprovisional application filed on or after June 8, 1995, and abandoned for failure to prosecute, the required reply may also be met by the filing of a request for continued examination in compliance with § 1.114. In an application or patent, abandoned or lapsed for failure to pay the issue fee or any portion thereof, the required reply must be the payment of the issue fee or any outstanding balance thereof.

(2) the petition fee as set forth in 37 CFR 1.17(m);

(3) a statement that the entire delay in filing the required reply from the due date for the reply until the filing of a grantable petition pursuant to 37 CFR 1.137(b) was unintentional. The Commissioner may required additional information where there is a question whether the delay was unintentional; and

(4) any terminal disclaimer (and fee as set forth in 37 CFR 1.20(d)) required pursuant to 37 CFR 1.137(c)).

The petition does not satisfy requirement (4) of the regulation.

Petitioner must submit a Terminal Disclaimer with any renewed petition since this is a design application. **Petitioner should note that submission of any renewed petition without the required reply will be construed as intentional delay.**

Further correspondence with respect to this matter should be addressed as follows:

By mail: Mail Stop Petitions
Commissioner for Patents
P.O. Box 1450
Alexandria VA 22313-1450

By FAX: (571) 273-8300
ATTN: Office of Petitions

Telephone inquiries concerning this matter may be directed to the undersigned Petitions Attorney at (571) 272-3212.

Patricia Faison-Ball

Patricia Faison-Ball
Senior Petitions Attorney
Office of Petitions

UNITED STATES PATENT AND TRADEMARK OFFICE

Commissioner for Patents
United States Patent and Trademark Office
P.O. Box 1450
Alexandria, VA 22313-1450
www.uspto.gov

REISING, ETHINGTON, BARNES,
KISSELLE & LEARMAN, P.C.
5291 COLONY DRIVE NORTH
SAGINAW MI 48603

COPY MAILED

DEC 0 6 2005

OFFICE OF PETITIONS

In re Application of
Matias Rodriguez Jr.
Application No. 29/203,725
Filed: April 19, 2004
Attorney Docket No.: 7387.3001.001

ON PETITION

This is a decision on the renewed petition filed November 18, 2005, under 37 CFR 1.137(b),[1] to revive the above-identified application.

The petition under 37 CFR 1.137 (b) is **GRANTED**.

This application became abandoned June 11, 2005 for failure to file formal drawings on or before June 10, 2005, as required by the Notice of Allowability mailed March 10, 2005. the issue fee on or before June 23, 2005. Accordingly, a Notice of Abandonment was mailed August 17, 2005. A petition to revive filed September 6, 2005 was dismissed in a decision mailed November 4, 2005 because the petition did not include a terminal disclaimer.

Comes now petitioner with the instant renewed petition.

All other requirements of 37 CFR 1.137(b), including the filing of a terminal disclaimer, having now been met, this matter is being referred to the Publishing Division for review of the drawings shown as having been received in the PTO on November 18, 2005.

Telephone inquiries concerning this matter may be directed to the undersigned Petitions Attorney at (571) 272-3212.

Patricia Faison-Ball
Senior Petitions Attorney
Office of Petitions

---

[1] Effective December 1, 1997, the provisions of 37 CFR 1.137(b) now provide that where the delay in reply was unintentional, a petition may be filed to revive an abandoned application or a lapsed patent pursuant to 37 CFR 1.137(b). A grantable petition filed under the provisions of 37 CFR 1.137(b) must be accompanied by:

(1) the required reply, unless previously filed. In a nonprovisional application abandoned for failure to prosecute, the required reply may be met by the filing of a continuing application. In a nonprovisional application filed on or after June 8, 1995, and abandoned for failure to prosecute, the required reply may also be met by the filing of a request for continued examination in compliance with § 1.114. In an application or patent, abandoned or lapsed for failure to pay the issue fee or any portion thereof, the required reply must be the payment of the issue fee or any outstanding balance thereof.

(2) the petition fee as set forth in 37 CFR 1.17(m);

(3) a statement that the entire delay in filing the required reply from the due date for the reply until the filing of a grantable petition pursuant to 37 CFR 1.137(b) was unintentional. The Commissioner may required additional information where there is a question whether the delay was unintentional; and

(4) any terminal disclaimer (and fee as set forth in 37 CFR 1.20(d)) required pursuant to 37 CFR 1.137(c)).

UNITED STATES PATENT AND TRADEMARK OFFICE

Commissioner for Patents
United States Patent and Trademark Office
P.O. Box 1450
Alexandria, VA 22313-1450
www.uspto.gov

CALFEE HALTER & GRISWOLD, LLP
800 SUPERIOR AVENUE
SUITE 1400
CLEVELAND OH 44114

COPY MAILED
NOV 18 2008

In re Application of :
Mark E. ROSENKRANZ et al. :
Application No. 29/203,730 : DECISION ON PETITION
Filed: April 16, 2007 :
Attorney Docket No. 12873/04677 :

This is a decision on the petition under 37 CFR 1.137(b), filed June 05, 2008, to revive the above-identified design application.

The petition is **GRANTED**.

The application became abandoned for failure to timely pay the issue fee on or before September 06, 2007, as required by the Notice of Allowance and Fee(s) Due, mailed June 06, 2007, which set a statutory period for reply of three (3) months. Accordingly, the application became abandoned on September 07, 2007. A Notice of Abandonment was mailed on April 16, 2008.

The petition satisfies the requirements of 37 CFR 1.137(b) in that petitioner has supplied (1) the reply in the form of the $800 issue fee and corrected drawings, (2) the petition fee of $1540, (3) a proper statement of unintentional delay, and (4) a terminal disclaimer and fee as required by 37 CFR 1.137(d). Accordingly, the failure to timely pay the issue fee as required by the Notice of Allowance and Fee(s) Due, mailed June 06, 2007 is accepted as being unintentionally delayed.

The terminal disclaimer is accepted and has been made of record. Any continuing application filed from this application must contain a copy of the terminal disclaimer. The copy of the terminal disclaimer must be filed with a cover letter requesting the terminal disclaimer be recorded on the continuing application. A copy of this decision should be attached to the cover letter.

Telephone inquiries concerning this decision should be directed to K. Reichle at (571) 272-6051.

This application is being referred to Publishing Division for further processing in accordance with this decision on petition.

David Bucci
Petitions Examiner
Office of Petitions

UNITED STATES PATENT AND TRADEMARK OFFICE

Commissioner for Patents
United States Patent and Trademark Office
P.O. Box 1450
Alexandria, VA 22313-1450
www.uspto.gov

WILLIAM M. MERONE
KENYON & KENYON
1500 K STREET, N.W.
WASHINGTON, DC 20005

COPY MAILED

SEP 3 0 2005

OFFICE OF PETITIONS

In re Application of :
Guy Jarmon Mouchi et al :
Application No. 29/203,771 :
Filed: April 20, 2004 :
Attorney Docket No. 13058/17 :

ON PETITION

This is a decision on the petition under 37 CFR 1.55, filed June 17, 2005, which is being treated under 37 CFR 1.55(a), for entry of priority papers submitted after the date the issue fee was paid.

The petition is **granted**.

Receipt is acknowledged of papers submitted under 35 USC 119.

The priority papers are accepted as timely filed. The papers have been placed of record in the file.

Petitioner is advised that the rule affecting the submission of a claim for priority or a certified priority document under 37 CFR 1.55(a) was changed effective November 7, 2000. In effect, the Office will permit applicants to file a priority claim or certified priority document with the processing fee set forth in 37 CFR 1.17(i) between the date the issue fee is paid and the date a patent is issued. The Office will, however, merely place such submission in the application file but will not attempt to determine whether the applicant has met the conditions of 35 USC 119(a)-(d) to make the priority claim information in the text of the patent. In such a situation, the patent will not contain the priority claim information. The patentee may request a certificate of correction under 35 USC 255 and 1.323 and a determination of entitlement for such priority will be made after the patent is granted. See Federal Register/Vol. 65., No. 175, September 8, 2000, page 54622.

Nevertheless, since the instant petition was associated with the file and was before the deciding official prior to issuance, action on the petition under 37 CFR 1.55(a) has been taken. However, if the printing of the patent has progressed to the point where the priority data cannot be included on the printed patent, petitioner may request a certificate of correction pursuant to the provisions of 37 CFR 1.323 and pay the $100 fee therefor.

This matter is being referred to Publishing Division.

Any inquiries concerning this decision may be directed to Wan Laymon at (571) 272-3220. Any questions concerning the issuance of this application into a patent should be directed Customer Services at (703) 308-6789.

Frances Hicks

Frances Hicks
Lead Petitions Examiner
Office of Petitions
Office of the Deputy Commissioner
for Patent Examination Policy

UNITED STATES PATENT AND TRADEMARK OFFICE

Commissioner for Patents
United States Patent and Trademark Office
P.O. Box 1450
Alexandria, VA 22313-1450
www.uspto.gov

BUCHANAN INGERSOLL
& ROONEY PC
P.O. BOX 1404
ALEXANDRIA VA 22313-1404

COPY MAILED

MAR 13 2008

In re Application of	:	
Thimons, et al	:	
Patent No. D527,834	:	DECISION
Issue Date: 5 September, 2006	:	
Application No. 29/203,806	:	
Filed: 20 April, 2004	:	
Attorney Docket No. 040040	:	

This is a notice regarding the request for acceptance of a fee deficiency submission (properly considered under 37 C.F.R. §1.28) filed on 18 August, 2006.

The Office regrets the delay in addressing this matter, however, it was presented to the attorneys in the Office of Petitions only at this writing

On September 1, 1998, the Court of Appeals for the Federal Circuit held that 37 C.F.R. '1.28(c) is the sole provision governing the time for correction of the erroneous payment of the issue fee as a small entity. See DH Technology v. Synergystex International, Inc. 154 F.3d 1333, 47 USPQ2d 1865 (Fed. Cir. Sept. 1, 1998).

The Office no longer investigates or rejects original or reissue applications under 37 C.F.R. §1.56. 1098 Off. Gaz. Pat. Office 502 (January 3, 1989). Therefore, nothing in this notice is intended to imply that an investigation was done.

Your fee deficiency submission under 37 C.F.R. §1.28 hereby is **ACCEPTED**

This file is being released to IFW Files Repository.

Patent No. D 527,834
Application No. 29/203,806

The general phone number for the Office of Petitions which should be used for status requests is (571) 272-3282, however, it is noted that all practice before the Office is in writing (see: 37 C.F.R. §1.2[1]) and the proper authority for action on any matter in this regard are the statutes (35 U.S.C.), regulations (37 C.F.R.) and the commentary on policy (MPEP). Therefore, no telephone discussion may be controlling or considered authority for Petitioner's action(s).

John J. Gillon, Jr.
Senior Attorney
Office of Petitions

---

[1] The regulations at 37 C.F.R. §1.2 provide:

§1.2 Business to be transacted in writing.

All business with the Patent and Trademark Office should be transacted in writing. The personal attendance of applicants or their attorneys or agents at the Patent and Trademark Office is unnecessary. The action of the Patent and Trademark Office will be based exclusively on the written record in the Office. No attention will be paid to any alleged oral promise, stipulation, or understanding in relation to which there is disagreement or doubt.

UNITED STATES PATENT AND TRADEMARK OFFICE

Commissioner for Patents
United States Patent and Trademark Office
P.O. Box 1450
Alexandria, VA 22313-1450
www.uspto.gov

NIKOLAI & MERSEREAU, P.A.
900 SECOND AVENUE SOUTH
SUITE 820
MINNEAPOLIS, MN 55402

COPY MAILED

FEB 2 2 2007

OFFICE OF PETITIONS

In re Patent No. D497844 :
Issued: November 2, 2004 :
Application No.: 29/203,820 : ON PETITION
Filed: April 20, 2004 :
Attorney Docket No: **US113910-1** :

This is a regarding the "Deficiency Payment under 37 CFR 1.28(c)" filed September 29, 2006, which will be treated as a petition under 37 CFR 1.28(c).

The petition is **GRANTED.**

By the instant petition, petitioner informs the USPTO that the inventive entity is not eligible for small status. The loss of small entity status is acknowledged and noted in the file history.

Telephone inquiries regarding this decision should be directed to the undersigned at (571) 272-3222.

Kenya A. McLaughlin
Petitions Attorney
Office of Petitions

UNITED STATES PATENT AND TRADEMARK OFFICE

Commissioner for Patents
United States Patent and Trademark Office
P.O. Box 1450
Alexandria, VA 22313-1450
www.uspto.gov

6/24/05

NORRIS MCLAUGHLIN & MARCUS, P.A.
875 THIRD AVENUE
18TH FLOOR
NEW YORK, NY 10022

In re Application of
Lamson Nguyen
Serial No.: 29/203,832
Filed: April 19, 2004
Attorney Docket No.: 102792-275

: PETITION DECISION

This is a decision on applicant's petition to revive patent application under 37 CFR 1.137(b), submitted May 13, 2005, to revive an unintentionally abandoned application.

This application became abandoned for failure to respond to the Notice of Allowance mailed February 10, 2005, which set a three-month statutory period to submit the Issue Fee. As no response was received by May 10, 2005, the application was abandoned; applicant then filed this petition.

A grantable petition for a design application under 37 CFR 1.137(b), as revised December 1, 1997, requires four items: (1) a petition and petition fee; (2) a complete response if not earlier made; (3) a statement that the entire period of delay in prosecution was unintentional; and (4) a terminal disclaimer and disclaimer fee. The requirement for a terminal disclaimer has been waived, as the petition was filed before the mailing of the Notice of Abandonment.

Applicant's petition is **GRANTED**.

The application will be forwarded to Publication Division for printing as a patent in due course.

Should there be any questions with respect to this decision, please contact Sandra Morris; by mail addressed to: Director, Technology Center 1700/2900, P.O. Box 1450, Alexandria, VA 22313-1450; or by telephone at (571) 272-2622.

Jacqueline M. Stone

Jacqueline Stone
Director, Technology Center 1700/2900

UNITED STATES PATENT AND TRADEMARK OFFICE

Commissioner for Patents
United States Patent and Trademark Office
P.O. Box 1450
Alexandria, VA 22313-1450
www.uspto.gov
DIW Oct-06

NORRIS, MCLAUGHLIN & MARCUS
875 THIRD AVE
18TH FLOOR
NEW YORK NY 10022

COPY MAILED
OCT 13 2006
OFFICE OF PETITIONS

In re Patent No. D525,923	:	
Issued: 27 June, 2006	:	
Application No. 29/203,832	:	ON PETITION
Filed: 19 April, 2004	:	
Atty Dckt No. 102792-275	:	

This is a decision on the petition filed on 24 July, 2006, which is being treated as a request under 37 CFR 3.81(b)[1] to correct the assignee on the front page of the above-identified patent by way of a Certificate of Correction.

The petition is **granted**.

Counsel's deposit account will be charged the processing fee of $130.00 and the certificate of correction fee of $100.00, as authorized in the request.

Telephone inquires concerning this matter may be directed to the undersigned at 571.272.3231. Any questions concerning the issuance of the Certificate of Correction should be directed to the Certificates of Correction Branch at 703.305.8309.

The file is being referred to the Certificates of Correction Branch for issuance of the requested Certificate of Correction.

DWood

Douglas I. Wood
Senior Petitions Attorney
Office of Petitions

[1] See Official Gazette of 22 June, 2004.

UNITED STATES PATENT AND TRADEMARK OFFICE

Commissioner for Patents
United States Patent and Trademark Office
P.O. Box 1450
Alexandria, VA 22313-1450
www.uspto.gov

NORRIS, MCLAUGHLIN & MARCUS
875 THIRD AVE
18TH FLOOR
NEW YORK, NY 10022

COPY MAILED
SEP 15 2006
OFFICE OF PETITIONS

In re Patent No. D512480
:
Issue Date: December 6, 2005
:
Application No. 29/203,833
: ON PETITION
Filed: April 19, 2004
:
Attorney Docket No. 102792-277/11339D3 US6

This is a decision on the petition filed January 12, 2006, which is being treated as a request under 37 CFR 3.81(b)[1] to correct the assignee on the front page of the above-identified patent by way of Certificate of Correction.

The request is **granted**.

Deposit account 14-1263 will be charged $130.00 for the request and $100.00 for the certificate of correction fee.

Telephone inquiries concerning this matter may be directed to the undersigned at (571) 272-3222. Any questions concerning the issuance of the Certificate of Correction should be directed to the Certificate of Correction Branch at (703) 305-8309.

The file is being forwarded to the Certificate of Correction Branch for issuance of the requested Certificate of Correction.

Kenya A. McLaughlin
Petitions Attorney
Office of Petitions

[1] See *Official Gazette* of June 22, 2004.

29/203836

SPE RESPONSE FOR CERTIFICATE OF CORRECTION

Paper No.: _____

DATE : 12/2/05

TO SPE OF : ART UNIT 2913

SUBJECT : Request for Certificate of Correction on Patent No.:
A response is requested with respect to the accompanying request for a certificate of correction.

Please complete this form and return with file, within 7 days to:
Certificates of Correction Branch ~~PK 3-922~~ S/T 9A22
Palm location **7580** - Tel. No. 305-8309

With respect to the change(s) requested, correcting Office and/or Applicant's errors, should the patent read as shown in the certificate of correction? No new matter should be introduced, nor should the scope or meaning of the claims be changed.

Please Check Descriptions of the Fig.

Thank You For Your Assistance

Certificates of Correction Branch

The request for issuing the above-identified correction(s) is hereby:
Note your decision on the appropriate box.

- [X] **Approved** — All changes apply.
- [ ] **Approved in Part** — Specify below which changes **do not** apply.
- [ ] **Denied** — State the reasons for denial below.

Comments:

Delete Figure drawing 4 and insert new Fig. 3 description.

Caron D. Veynar
CARON D. VEYNAR
SUPERVISORY PATENT EXAMINER

SPE

2913
Art Unit

PTOL-306 (REV. 7/03)

U.S. DEPARTMENT OF COMMERCE Patent and Trademark Office

UNITED STATES PATENT AND TRADEMARK OFFICE

Commissioner for Patents
United States Patent and Trademark Office
P.O. Box 1450
Alexandria, VA 22313-1450
www.uspto.gov

8/4/05

ROSENBERG, KLEIN & LEE
3458 ELLICOTT CENTER DRIVE, SUITE 101
ELLICOTT CITY, MD 21043

In re Application of
Ming Chun Lai
Serial No.: 29/203,854
Filed: April 21, 2004
Attorney Docket No.: MR1115-521

: PETITION DECISION

This is a decision on applicant's petition to revive patent application under 37 CFR 1.137(b), received April 5, 2005, to revive an unintentionally abandoned application.

This application became abandoned for failure to respond to the Notice of Allowance mailed October 21, 2004, which set a three-month statutory period to submit the Issue Fee. As no response was received by January 21, 2005, a Notice of Abandonment was mailed March 8, 2005. Applicant then filed this petition.

A grantable petition for a design application under 37 CFR 1.137(b), as revised December 1, 1997, requires four items: (1) a petition and petition fee; (2) a complete response if not earlier made; (3) a statement that the entire period of delay in prosecution was unintentional; and (4) a terminal disclaimer and disclaimer fee. The requirement for a terminal disclaimer has been waived, as the petition was filed within one month of the mailing of the Notice of Abandonment.

Applicant's petition is **GRANTED**.

The application will be forwarded to Publication Division for printing as a patent in due course.

The terminal disclaimer fee of $130.00 will be refunded to applicant's Deposit account 18-2011, as directed.

Should there be any questions with respect to this decision, please contact Sandra Morris; by mail addressed to: Director, Technology Center 1700/2900, P.O. Box 1450, Alexandria, VA 22313-1450; or by telephone at (571) 272-2622.

Jacqueline M. Stone

Jacqueline Stone
Director, Technology Center 1700/2900

UNITED STATES PATENT AND TRADEMARK OFFICE

OFFICE

COPY MAILED

JUL 14 2006

Director's Office
Office of Patent Publication

J C PATENTS, INC.
4 VENTURE, SUITE 250
IRVINE, CA 92618

In re Application of	:	
KITAMURA, NOBUYUKI, et al.	:	
Application No. 29/203,951	:	**DECISION ON PETITION**
Filed: April 20, 2004	:	
Attorney Docket No. JCLA13280-DS	:	

This is a decision on the Petition To Withdraw Holding Of Abandonment, received in the United States Patent & Trademark (USPTO) via facsimile transmission on January 24, 2006.

The petition is **DISMISSED**.

The above-identified application was held abandoned for applicant's failure to timely pay the issue fee, as required in the Notice of Allowance and Fee(s) Due mailed March 21, 2005. The Notice of Abandonment, mailed on January 9, 2006 indicates, "The submitted fee of $0 is insufficient. A balance of $800 is due".

The Office acknowledges receipt of Part B – Fee(s) Transmittal via facsimile transmission on April 1, 2005, authorizing that the Issue Fee be charged to Deposit Account No. 50-0710. On April 4, 2005, when an attempt was made by the Office of Finance to charge the fees, there were insufficient funds in the Deposit Account to charge the required fee.

37 CFR 1.25 (a) and (b), which states in part:

> 1.25(a) ...An amount sufficient to cover all fee, services, copies, etc., requested must always be on deposit. Charges to accounts with insufficient funds will not be accepted."
>
> 1.25 (b) ...An authorization to charge a fee to a deposit account will not be considered payment of the fee on the date the authorization to charge the fee is effective as to the particular fee to be charged unless sufficient funds are present in the account to cover the fee.

In light of the non-compliance with 37 CFR 1.25, the holding of abandonment cannot be withdrawn.

Applicant may seek relief by filing a petition for Revival of Abandoned Application under CFR § 1.137 (a) or (b). (Forms are available at USPTO website http://www.uspto.gov)

- Under 37 CFR 1.137(a), a petition for the revival of an ***unavoidable*** abandoned application
- Under 37 CFR 1.137(b), a petition for the revival of an ***unintentionally*** abandoned application

Further inquires with respect to filing a petition under 37 CFR § 1.137 may be directed to the Office of Petitions at 571-272-3282 or addressed as follows:

By mail: Mail Stop Petitions
Commissioner for Patents
Office of Petitions
P O Box 1450
Alexandria, VA 22313-1450

Telephone inquires concerning this decision matter may be directed to the undersigned at 703 308-9250 Ext. 137.

Thomas E. Hawkins
Paralegal Specialist
Office of the Director
Office of Patent Publications

UNITED STATES PATENT AND TRADEMARK OFFICE

Commissioner for Patents
United States Patent and Trademark Office
P.O. Box 1450
Alexandria, VA 22313-1450
www.uspto.gov

J. C. PATENTS, INC.
4 VENTURE, SUITE 250
IRVINE, CA 92618

COPY MAILED

JAN 17 2007

OFFICE OF PETITIONS

In re Application of :
Nobuyuki Kitamura et al :
Application No. 29/203,951 : ON PETITION
Filed: April 20, 2004 :
Attorney Docket No. JCLA13280-DS :

This is a decision on the petition under 37 CFR 1.137(b), filed July 24, 2006, to revive the above-identified application.

The petition is **GRANTED.**

The above-identified application became abandoned for failure to submit the Issue fee in a timely manner in reply to the Notice of Allowance mailed March 21, 2005, which set a statutory period for reply of three (3) months. Accordingly, the above-identified application became abandoned on June 22, 2005.

Telephone inquiries concerning this decision should be directed to the undersigned at (571) 272-3210.

This matter is being referred to the Publishing Division for further processing.

Irvin Dingle
Petitions Examiner
Office of Petitions

UNITED STATES PATENT AND TRADEMARK OFFICE

Commissioner for Patents
United States Patent and Trademark Office
P.O. Box 1450
Alexandria, VA 22313-1450
www.uspto.gov

JENKENS & GILCHRIST PC
1445 ROSS AVENUE, SUITE 3200
DALLAS, TX 75202

COPY MAILED

JUL 0 8 2005

OFFICE OF PETITIONS

In re Application of	:
Stanfield Young	: DECISION GRANTING PETITION
Application No. 29/203,971	: UNDER 37 CFR 1.313(c)(3)
Filed: April 22, 2004	:
Attorney Docket No. 32151-419	:

This is a decision on the petition under 37 CFR 1.313(c)(3), filed July 6, 2005 to withdraw the above-identified application from issue after payment of the issue fee.

The petition is **GRANTED**.

The above-identified application is hereby withdrawn from issue in favor of a continued prosecution application (CPA) under 37 CFR 1.53(d).

Petitioner is advised that the issue fee paid on June 13, 2005 in the parent application is not refundable nor can it be applied towards any new Notice of Allowance which may issue on the CPA filed July 6, 2005.

In view of the mailing on July 7, 2005 of a notice of nonacceptance of the revocation and power of attorney filed on April 6, 2005, a courtesy copy of this decision is being mailed to petitioner. However, all future correspondence will be mailed to the above-noted address of record until the Office receives a statement complying with the provisions of 37 CFR 3.73(b).

Telephone inquiries should be directed to the undersigned at (571) 272-3218.

This matter is being referred to Technology Center AU 2911 for processing of the CPA and consideration of the Information Disclosure Statement.

Frances Hicks
Petitions Examiner
Office of Petitions

cc:

Lisa H. Meyerhoff
Baker & McKenzie LLP
2300 Trammel Crow Center
2001 Ross Avenue
Dallas, TX 75201

UNITED STATES PATENT AND TRADEMARK OFFICE

Commissioner for Patents
United States Patent and Trademark Office
P.O. Box 1450
Alexandria, VA 22313-1450
www.uspto.gov

COPY MAILED

JUL 0 8 2005

OFFICE OF PETITIONS

JENKENS & GILCHRIST PC
1445 ROSS AVENUE, SUITE 3200
DALLAS, TX 75202

In re Application of	:
Stanfield Young	: DECISION GRANTING PETITION
Application No. 29/203,996	: UNDER 37 CFR 1.313(c)(3)
Filed: April 22, 2004	:
Attorney Docket No. 32151-420	:

This is a decision on the petition under 37 CFR 1.313(c)(3), filed July 6, 2005 to withdraw the above-identified application from issue after payment of the issue fee.

The petition is **GRANTED**.

The above-identified application is hereby withdrawn from issue in favor of a continued prosecution application (CPA) under 37 CFR 1.53(d).

Petitioner is advised that the issue fee paid on June 13, 2005 in the parent application is not refundable nor can it be applied towards any new Notice of Allowance which may issue on the CPA filed July 6, 2005.

In view of the mailing on July 7, 2005 of a notice of nonacceptance of the revocation and power of attorney filed on April 6, 2005, a courtesy copy of this decision is being mailed to petitioner. However, all future correspondence will be mailed to the above-noted address of record until the Office receives a statement complying with the provisions of 37 CFR 3.73(b).

Telephone inquiries should be directed to the undersigned at (571) 272-3218.

This matter is being referred to Technology Center AU 2911 for processing of the CPA and consideration of the Information Disclosure Statement.

Frances Hicks
Petitions Examiner
Office of Petitions

cc:

Lisa H. Meyerhoff
Baker & McKenzie LLP
2300 Trammel Crow Center
2001 Ross Avenue
Dallas, TX 75201

UNITED STATES PATENT AND TRADEMARK OFFICE

Commissioner for Patents
United States Patent and Trademark Office
P.O. Box 1450
Alexandria, VA 22313-1450
www.uspto.gov

BAKER & MCKENZIE LLP
PATENT DEPARTMENT
2001 ROSS AVENUE
SUITE 2300
DALLAS TX 75201

COPY MAILED

APR 2 0 2006

OFFICE OF PETITIONS

In re Application of	:	
Young	:	
Application No. 29/203,996	:	ON PETITION
Filed: April 22, 2004	:	
Attorney Docket No. 31175330-000420	:	

This is a decision on the petition under 37 CFR 1.137(b), filed February 16, 2006 (certificate of mailing date February 13, 2006), to revive the above-identified application.

This application became abandoned for failure to timely pay the issue fee within three (3) months of the mailing of the Notice of Allowance and Fee(s) Due, mailed August 8, 2005. Accordingly, this application became abandoned on November 9, 2005. A Notice of Abandonment was mailed on February 21, 2006.

Applicant has submitted a proper reply in the form of the issue fee and a completed PTOL-85, an acceptable statement of the unintentional nature of the delay in responding to the August 8, 2005 Notice of Allowance and Fee(s) Due, the petition fee, and a terminal disclaimer.

The petition is **granted**.

This application is being forwarded to Publishing Division for processing into a patent.

Telephone inquiries concerning this matter may be directed to the undersigned at (571) 272-3230.

E. Shirene Willis
Senior Petitions Attorney
Office of Petitions

UNITED STATES PATENT AND TRADEMARK OFFICE

Commissioner for Patents
United States Patent and Trademark Office
P.O. Box 1450
Alexandria, VA 22313-1450
www.uspto.gov

Charles N.J. Ruggiero, Esq.
Ohlandt, Greeley, Ruggiero & Perle, L.L.P.
10th Floor
One Landmark Square
Stamford, CT 06901-2682

COPY MAILED

FEB 03 2005

OFFICE OF PETITIONS

In re Application of
Olsen and Wang
Application No.: 29/204,154
Filed: April 23, 2004
Attorney Docket No: 883.0070USD
For: SKILLET

: DECISION ACCORDING
: RULE 47(a) STATUS

This is in response to the petition under 37 CFR 1.47(a), filed November 17, 2004 (certificate of mailing dated November 15, 2004.)

The petition is **GRANTED**.

The above-identified application and papers have been reviewed and found in compliance with 37 CFR 1.47(a). This application is hereby accorded Rule 1.47(a) status.

The above-cited application was filed on April 23, 2004, without a properly executed declaration. On June 14, 2004, the Office of Initial Patent Examination mailed a Notice to File Missing Parts of Nonprovisional Application requiring a declaration signed by all named inventors and a surcharge of $130.00 for the late filing of the declaration, and a payment of the filing fee. On November 17, 2004, the instant petition was filed along with a request for an extension of time within the third month.

Petitioner has shown that inventor Wang expressly refused to join the prosecution of the application. The above-identified application and papers have been reviewed and found in compliance with 37 CFR 1.47(a). This application is hereby accorded Rule 1.47(a) status.

As provided in Rule 1.47(c), this Office will forward notice of this application's filing to the non-signing inventor at the addresses given in the petition. Notice of the filing of this application will also be published in the Official Gazette.

This application will be forwarded to the Office of Initial Patent Examination for further processing.

Telephone inquiries should be directed to the undersigned at (571) 272-3222.

Kenya A. McLaughlin
Petitions Attorney
Office of Petitions

UNITED STATES PATENT AND TRADEMARK OFFICE

Commissioner for Patents
United States Patent and Trademark Office
P.O. Box 1450
Alexandria, VA 22313-1450
www.uspto.gov

Dong Lei Wang
25A, Building 19
Bay Garden, Jidard
Zhou District, Zhauh City
Guan Dong Province, CHINA

COPY MAILED

FEB 03 2005

OFFICE OF PETITIONS

In re Application of :
Olsen and Wang :
Application No. 29/204,154 : LETTER
Filed: April 23, 2004 :
Attorney Docket No. 883.0070USD :
For: SKILLET

Dear Mr. Wang:

You are named as a joint inventor in the above-identified United States patent application filed under the provisions of 35 U.S.C. 116 (United States Code) and 37 CFR 1.47(a), Rules of Practice in Patent Cases. Should a patent be granted on the application you will be designated therein as a joint inventor.

As a joint inventor, you are entitled to inspect any paper in the file wrapper of the application, order copies of all or any part thereof (at a prepaid cost per 37 CFR 1.19) or make your position of record in the application. Alternatively, you may arrange to do any of the preceding through a registered patent attorney or agent presenting written authorization from you. If you care to join the application, counsel of record (see below) would presumably assist you. Joining in the application would entail the filing of an appropriate oath or declaration by you pursuant to 37 CFR 1.63. It should be further noted that any assignee of record of the entire interest in the application may request that the inventor(s) be excluded from access to the application. If the request is granted, you will be informed of that fact and will only be permitted to inspect the application on sufficient showing of why such inspection is necessary to conserve your rights. See *MPEP* 106, citing, *In re The Kellog Switchboard & Supply Company*, 1906 C.D. 274 (Comm'r Pat. 1906).

Telephone inquiries regarding this communication should be directed to Petitions Attorney Kenya A. McLaughlin at (571) 272-3222. Requests for information regarding your application should be directed to the File Information Unit at (703) 308-2733. Information regarding how to pay for and order a copy of the application, or a specific paper in the application, should be directed to Certification Division at (703) 308-9726 or 1-800-972-6382 (outside the Washington D.C. area).

Kenya A. McLaughlin

Kenya A. McLaughlin
Petitions Attorney
Office of Petitions

Charles N.J. Ruggiero, Esq.
Ohlandt, Greeley, Ruggiero & Perle, L.L.P.
10th Floor
One Landmark Square
Stamford CT 06901-2682

UNITED STATES PATENT AND TRADEMARK OFFICE

Commissioner for Patents
United States Patent and Trademark Office
P.O. Box 1450
Alexandria, VA 22313-1450
www.uspto.gov

JUN 29 2004

Robert P. Renke
Suite 250
28333 Telegraph Road
Southfield MI 48034

In re Application of	:	
Platto et al	:	
Serial No.: 29/204,169	:	DECISION ON
Filed: April 26, 2004	:	PETITON TO MAKE SPECIAL
For: Vehicle Front Grill	:	

This is in response to applicants' petition filed June 1, 2004, to make the above-identified application special under the provisions of 37 CFR 1.102(d), based on infringement.

Applicant has satisfied the provisions set forth in M.P.E.P. 708.02, II. Therefore the petition is **GRANTED**.

The application will be forwarded to the examiner for action on the merits commensurate with this decision.

Should there be any questions with regard to this letter please contact John Kittle by letter addressed to the Director, Technology Center 3700/2900, P.O. Box 1450 Alexandria, VA 22313-1450 or by telephone at (703) 308-0873 or by facsimile transmission at (703) 308-3139.

John E. Kittle

John E. Kittle
Director
Technology Center 3700/2900

UNITED STATES PATENT AND TRADEMARK OFFICE

OFFICE

SERIAL NUMBER	FILING DATE	FIRST NAMED APPLICANT	ATTORNEY DOCKET NO.
29/204,191	04/26/04	BUTTERBAUGH, JEFFREY LEE	D-909

THE PROCTER & GAMBLE COMPANY
INTELLECTUAL PROPERTY DIVISION
WINTON HILL BUSINESS CENTER - BOX 161
6110 CENTER HILL AVENUE
CINCINNATI OH 45224

EXAMINER	
NELSON, THORNTON	
ART UNIT	PAPER NUMBER
2915	

DATE MAILED: 10/4/06

NOTICE OF RESCINDED ABANDONMENT

☐ **In response to your communication filed _____**

☒ **Through inadvertence, a Notice of Abandonment was mailed in the above-identified application. The Notice of Abandonment is hereby rescinded.**

Manager, Publications Division
Office of Patent Publication
571-272-4200

UNITED STATES PATENT AND TRADEMARK OFFICE

Commissioner for Patents
United States Patent and Trademark Office
P.O. Box 1450
Alexandria, VA 22313-1450
www.uspto.gov

JUN 25 2004

ARMSTRONG, KRATZ, QUINTOS, HANSON
& BROOKS, LLP
Suite 220
502 Washington Avenue
Towson MD 21204

In re Application of	:	
Arthur E. Christensen	:	
Serial No.: 29/204,240	:	DECISION ON PETITION
Filed: April 27, 2004	:	
For: Article Adapted to be Secured to a	:	
Disposable Oil Filter to Facilitate the	:	
Removal Thereof	:	

This is in response to applicants' petition filed April 27, 2004, to make the above-identified application special under the provisions of 37 CFR 1.102(c), based on the age of the applicant.

Applicant has satisfied the provisions set forth in M.P.E.P. 708.02, IV. Therefore the petition is **GRANTED**.

The application will be forwarded to the examiner for action on the merits commensurate with this decision.

Should there be any questions with regard to this letter please contact John Kittle by letter addressed to the Director, Technology Center 3700/2900, Washington, DC 20231, or by telephone at (703) 308-0873 or by facsimile transmission at (703) 308-3139.

John E. Kittle

John E. Kittle
Director,
Technology Center 3700/2900

UNITED STATES PATENT AND TRADEMARK OFFICE

COMMISSIONER FOR PATENTS
UNITED STATES PATENT AND TRADEMARK OFFICE
P.O. BOX 1450
ALEXANDRIA, VA 22313-1450
www.uspto.gov

DAVID J LEVY, CORPORATE INTELLECTUAL PROPERTY
GLAXOSMITHKLINE
FIVE MOORE DR., PO BOX 13398
RESEARCH TRIANGLE PARK NC 27709-3398

6/24/05

In re Application of
Matthew Spencer Collins
Serial No.: 29/204,249
Filed: April 27, 2004
Attorney Docket No.: PB60480DES

: PETITION DECISION

This is in response to applicant's Petition to Withdraw the Holding of Abandonment, which is being treated as a Petition under 37 CFR 1.181, filed March 16, 2005, based on having responded to the Office action.

A review of the file history shows that a Notice to File Missing Parts was mailed June 18, 2004, setting a two month period to submit an oath or declaration and a surcharge. As no response was submitted by August 18, 2004, a Notice of Abandonment was mailed March 9, 2005. This petition followed.

Applicant has provided a copy of the response, which includes a Certificate of Transmission date of June 30, 2004 and an Auto-Reply from the Office. While this paper was never associated with the application, it is clear that the response was timely filed, and the application was clearly abandoned in error.

Applicant's petition is **GRANTED.**

The $130.00 surcharge for filing a late oath or declaration will be charged to applicant's Deposit Account 07-1392, as directed.

The application will be promptly forwarded to an Examiner for initial examination in due course.

Should there be any questions with respect to this decision, please contact Sandra Morris; by mail addressed to: Director, Technology Center 1700/2900, P.O. Box 1450, Alexandria, VA 22313-1450; or by telephone at (571) 272-2622.

Jacqueline M. Stone

Jacqueline Stone
Director, Technology Center 1700/2900

UNITED STATES PATENT AND TRADEMARK OFFICE

Commissioner for Patents
United States Patent and Trademark Office
P.O. Box 1450
Alexandria, VA 22313-1450
www.uspto.gov

BIRCH STEWART KOLASCH & BIRCH
PO BOX 747
FALLS CHURCH, VA 22040-0747

COPY MAILED

SEP 2 3 2004

OFFICE OF PETITIONS

In re Application of	:	
Young Gi Lee	:	
Application No. 29/204,277	:	ON PETITION
Filed: April 28, 2004	:	
Attorney Docket No. 0630-2003PUS1	:	

This is a decision on the papers styled, "Petition To Accept Earlier Filing Date" filed August 16, 2004, requesting that the above-identified application be accorded a filing date of April 28, 2004, including five (5) sheets of drawings.

The application was submitted on April 28, 2004. However, on June 16, 2004, the Office of Initial Patent Examination (OIPE) mailed a "Notice Of Incomplete Nonprovisional Application" that stated the application had not been accorded a filing date, and that the application was deposited without drawings.

In response, on August 16, 2004, the present petition was filed wherein petitioner argues that five (5) sheets of drawings were filed on April 28, 2004. The papers were accompanied by a copy of applicant's postcard receipt that acknowledges receipt of five (5) sheets of drawings on April 28, 2004. A review of the application file indicates the presence of zero (0) sheets of drawings filed on April 28, 2004. It is assumed that missing sheets of drawings were misplaced by the Office.

In view of the above, the petition is granted.

The $130.00 petition fee will be refunded to deposit account no. 02-2448.

This application will be returned to OIPE for further processing with a filing date of April 28, 2004, using the five (5) sheets of drawings, supplied on August 16, 2004.

Telephone inquiries concerning this matter may be directed to the undersigned at (703) 306-9200.

Edward J. Tannouse
Petitions Attorney
Office of Petitions
United States Patent and Trademark Office

UNITED STATES PATENT AND TRADEMARK OFFICE

Commissioner for Patents
United States Patent and Trademark Office
P.O. Box 1450
Alexandria, VA 22313-1450
www.uspto.gov

FULBRIGHT AND JAWORSKI LLP
555 S. FLOWER STREET, 41ST FLOOR
LOS ANGELES, CA 90071

COPY MAILED

APR 10 2007

OFFICE OF PETITIONS

In re Application of	:	
Roy Peers-Smith, et al.	:	
Application No. 29/204,369	:	ON PETITION
Filed: April 27, 2004	:	
Atty Docket No. LA-7567-101US/10405431	:	

This is a decision in response to the petition, filed November 8, 2006, which is being treated as a request under 37 CFR 3.81(b)[1] to correct the assignee's name on the Fee(s) Transmittal form PTOL-85(b) so that the Letters Patent will issue to the assignee.

The request is **DISMISSED**.

Petitioner states that the correct assignee's name is ALLEN-VANGUARD LTD and that an incorrect assignee's name was included on the Part B - Fee(s) Transmittal form at the time of payment of the issue fee. Accordingly, petitioner requests that the patent issue to ALLEN-VANGUARD LTD.

37 CFR 3.81(b), effective June 25, 2004, reads:

> *After payment of the issue fee:* Any request for issuance of an application in the name of the assignee submitted after the date of payment of the issue fee, and any request for a patent to be corrected to state the name of the assignee, must state that the assignment was submitted for recordation as set forth in § 3.11 before issuance of the patent, and must include a request for a certificate of correction under § 1.323 of this chapter (accompanied by the fee set forth in § 1.20(a)) and the processing fee set forth in § 1.17(i) of this chapter.

[1] *See* MPEP 1309, subsection II and Official Gazette of June 22, 2004

The request under 37 CFR 3.81(b) was not accompanied by a request for a certificate of correction (and fee) as required by 3.81(b). *See also* MPEP 1481.01. As petitioner has failed to comply with the provisions of 37 CFR 3.81(b), the request cannot be granted at this time.

A review of Office database assignment records reflects that an assignment to ALLEN-VANGUARD LTD has been recorded. Therefore, upon submission of the required certificate of correction and fee, it would be appropriate for the Office to issue a certificate of correction to correct the front page of the Letters Patent to reflect that ALLEN-VANGUARD LTD was the assignee of record at the time of issuance of the application into a patent. *Note also* 35 U.S.C. § 152.

In view of the above and **after issuance of this application into a patent, the Certificates of Correction Branch is instructed to issue a certificate of correction upon submission by petitioner of a request for a certificate of correction (and fee) which sets forth ALLEN-VANGUARD LTD, as the assignee**. *No certificate of correction will be issued which sets forth an assignee other than the assignee set forth in this request. A copy of this decision* ***must*** *accompany the request for a Certificate of Correction.*

No further renewed request under 37 CFR 3.81(b) is necessary for consideration by the Office of Petitions for issuance of a certificate of correction in the name of the assignee set forth in this request, since this decision operates as an instruction to the Certificates of Correction Branch to issue the requested certificate of correction.

Alternatively, if petitioner desires to have the correct assignee data appear on the front page of the Letters Patent, petitioner may wish to consider filing a petition to withdraw the subject application from issue under 37 CFR 1.313(c)(2). The petition to withdraw from issue under 37 CFR 1.313(c)(2) must be accompanied by a request for continued examination (RCE) and submission (which may be a request under 37 CFR 3.81(b)).

Inquiries concerning this decision should be directed to the undersigned at (571) 272-3204. Any questions concerning issuance of a certificate of correction should be directed to the Certificates of Correction Branch at (571) 272-4200.

Sherry D. Brinkley
Petitions Examiner
Office of Petitions

UNITED STATES PATENT AND TRADEMARK OFFICE

Commissioner for Patents
United States Patent and Trademark Office
P.O. Box 1450
Alexandria, VA 22313-1450
www.uspto.gov

LACKENBACH SIEGEL, LLP
LACKENBACH SIEGEL BUILDING
1 CHASE ROAD
SCARSDALE NY 10583

COPY MAILED
AUG 1 1 2006
OFFICE OF PETITIONS

In re Application of :
Voorn :
Application No. 29/204,382 : ON PETITION
Filed: April 28,2004 :
Title of Invention: Queen Cut Jewel :

This is a decision on the petition filed March 31, 2006, under 37 CFR 1.137(b) to revive the above-identified application. The petition was supplemented with a terminal disclaimer and accompanying fee on August 3, 2006.

This application became abandoned for failure to timely submit the issue fee , as required by the Notice of Allowance and Fee (s) Due which was mailed April 20, 2005. The Notice of Allowance and Fee (s) Due set a three (3) month statutory period for reply. Extensions of time were not available under the provisions of 37 CFR 1.136(a). Accordingly, this application became abandoned on July 21, 2005. This decision precedes the mailing of a Notice of Abandonment.

The requirements for a grantable petition under 37 CFR 1.137(b) have been met. This petition is hereby **Granted**.

This application is being forwarded to the Office of Patent Publication for processing into a patent.

Telephone inquiries should be directed to the undersigned at (571) 272-3215.

Charlema R. Grant

Charlema R. Grant
Petitions Attorney
Office of Petitions

UNITED STATES PATENT AND TRADEMARK OFFICE

COMMISSIONER FOR PATENTS
UNITED STATES PATENT AND TRADEMARK OFFICE
P.O. BOX 1450
ALEXANDRIA, VA 22313-1450
www.uspto.gov

LACKENBACH SIEGEL, LLP
LACKENBACH SIEGEL BUILDING
1 CHASE ROAD
SCARSDALE, NY 10583

COPY MAILED

JUL 07 2006

OFFICE OF PETITIONS

ON PETITION

In re Application of :
Adri Voorn :
Application No. 29/204,384 :
Filed: April 28, 2004 :
Attorney Docket No. DP-006 :

This is a decision on the petition under 37 CFR 1.137(b), filed on March 31, 2006, to revive the above-identified application.

The petition is **DISMISSED**.

The application became abandoned for failure to timely respond to the Notice of Allowance and Fee(s) Due mailed June 6, 2005. A Notice of Abandonment was mailed on February 21, 2006.

A grantable petition under 37 CFR 1.137(b) must be accompanied by: (1) the required reply, unless previously filed; (2) the petition fee as set forth in 37 CFR 1.17(m); (3) a statement that the entire delay in filing the required reply from the due date for the reply until the filing of a grantable petition pursuant to 37 CFR 1.137(b) was unintentional; and (4) any terminal disclaimer (and fee as set forth in 37 CFR 1.20(d)) required by 37 CFR 1.137(d). Where there is a question as to whether either the abandonment or the delay in filing a petition under 37 CFR 1.137 was unintentional, the Commissioner may require additional information. See MPEP 711.03(c)(III)(C) and (D). The instant petition lacks item(s) (4).

A Terminal Disclaimer and the $130 Terminal Disclaimer fee is required under 37 CFR 1.137(d) if the application is: (1) a design application, (2) a utility application filed before June 8, 1995, or (3) a plant application filed before June 8, 1995. The Terminal Disclaimer must dedicate to the public a terminal part of the term of any patent granted the application equivalent to the period of abandonment of the application, and must also apply to any patent granted on any application containing a specific reference under 35 U.S.C. 120, 121 or 365(c) to the application for which revival is sought.

Any request for reconsideration of this decision must be submitted within **TWO (2) MONTHS** from the mail date of this decision. Extensions of time under 37 CFR 1.136(a) are permitted. The reconsideration request should include a cover letter entitled "Renewed Petition under 37 CFR 1.137(b), and be accompanied by the required Terminal Disclaimer and $130 fee." This is **not** a final agency action within the meaning of 5 U.S.C. § 704.

Further correspondence with respect to this matter should be addressed as follows:

By Mail: Mail Stop PETITION
Commissioner for Patents
P. O. Box 1450
Alexandria, VA 22313-1450

By hand: U. S. Patent and Trademark Office
Customer Service Window, Mail Stop Petitions
Randolph Building
401 Dulany Street
Alexandria, VA 22314

The centralized facsimile number is **(571) 273-8300.**

Telephone inquiries concerning this decision should be directed to the undersigned at (571) 272-3226.

Andrea Smith
Petitions Examiner
Office of Petitions

UNITED STATES PATENT AND TRADEMARK OFFICE

Commissioner for Patents
United States Patent and Trademark Office
P.O. Box 1450
Alexandria, VA 22313-1450
www.uspto.gov

LACKENBACH SIEGEL, LLP
LACKENBACH SIEGEL BUILDING
1 CHASE ROAD
SCARSDALE, NY 10583

COPY MAILED

APR 07 2008

OFFICE OF PETITIONS

In re Application of :
Adri Voorn :
Application No. 29/204,384 : ON PETITION
Filed: April 28, 2004 :
Attorney Docket No. DP-006 :

This is a decision on the renewed petition under 37 CFR 1.137(b), filed on August 3, 2006, to revive the above-identified application. The delay in responding is regretted.

The application became abandoned for failure to timely respond to the Notice of Allowance and Fee(s) Due mailed June 6, 2005. A Notice of Abandonment was mailed on February 21, 2006.

The petition satisfies the requirements of 37 CFR 1.137(b), in that, petitioner has supplied (1) the reply in the form of $800 for payment of the issue fee and $130 for the filing of a terminal disclaimer; (2) the petition fee of $1,500; and (3) a proper statement of unintentional delay. Therefore, the petition is **GRANTED**.

The terminal disclaimer under 37 CFR 1.137(d), filed August 3, 2006, has been accepted and made of record.

This application file is being referred to the Office of Data Management for further processing into a patent.

Telephone inquiries concerning this decision should be directed to the undersigned at (571) 272-3226.

Andrea Smith
Petitions Examiner
Office of Petitions

UNITED STATES PATENT AND TRADEMARK OFFICE

COMMISSIONER FOR PATENTS
UNITED STATES PATENT AND TRADEMARK OFFICE
P.O. BOX 1450
ALEXANDRIA, VA 22313-1450
www.uspto.gov

LACKENBACH SIEGEL, LLP
LACKENBACH SIEGEL BUILDING
1 CHASE ROAD
SCARSDALE, NY 10583

COPY MAILED

JUL 07 2006

OFFICE OF PETITIONS

In re Application of	:	
Adri Voorn	:	
Application No. 29/204,389	:	ON PETITION
Filed: April 28, 2004	:	
Attorney Docket No. DP-001	:	

This is a decision on the petition under 37 CFR 1.137(b), filed on March 31, 2006, to revive the above-identified application.

The petition is **DISMISSED**.

The application became abandoned for failure to timely respond to the Notice of Allowance and Fee(s) Due mailed June 6, 2005. A Notice of Abandonment was mailed on February 21, 2006.

A grantable petition under 37 CFR 1.137(b) must be accompanied by: (1) the required reply, unless previously filed; (2) the petition fee as set forth in 37 CFR 1.17(m); (3) a statement that the entire delay in filing the required reply from the due date for the reply until the filing of a grantable petition pursuant to 37 CFR 1.137(b) was unintentional; and (4) any terminal disclaimer (and fee as set forth in 37 CFR 1.20(d)) required by 37 CFR 1.137(d). Where there is a question as to whether either the abandonment or the delay in filing a petition under 37 CFR 1.137 was unintentional, the Commissioner may require additional information. See MPEP 711.03(c)(III)(C) and (D). The instant petition lacks item(s) (4).

A Terminal Disclaimer and the $130 Terminal Disclaimer fee is required under 37 CFR 1.137(d) if the application is: (1) a design application, (2) a utility application filed before June 8, 1995, or (3) a plant application filed before June 8, 1995. The Terminal Disclaimer must dedicate to the public a terminal part of the term of any patent granted the application equivalent to the period of abandonment of the application, and must also apply to any patent granted on any application containing a specific reference under 35 U.S.C. 120, 121 or 365(c) to the application for which revival is sought.

Any request for reconsideration of this decision must be submitted within **TWO (2) MONTHS** from the mail date of this decision. Extensions of time under 37 CFR 1.136(a) are permitted. The reconsideration request should include a cover letter entitled "Renewed Petition under 37 CFR 1.137(b), and be accompanied by the required Terminal Disclaimer and $130 fee." This is **not** a final agency action within the meaning of 5 U.S.C. § 704.

Further correspondence with respect to this matter should be addressed as follows:

By Mail: Mail Stop PETITION
Commissioner for Patents
P. O. Box 1450
Alexandria, VA 22313-1450

By hand: U. S. Patent and Trademark Office
Customer Service Window, Mail Stop Petitions
Randolph Building
401 Dulany Street
Alexandria, VA 22314

The centralized facsimile number is **(571) 273-8300.**

Telephone inquiries concerning this decision should be directed to the undersigned at (571) 272-3226.

Andrea Smith
Petitions Examiner
Office of Petitions

UNITED STATES PATENT AND TRADEMARK OFFICE

Commissioner for Patents
United States Patent and Trademark Office
P.O. Box 1450
Alexandria, VA 22313-1450
www.uspto.gov

LACKENBACH SIEGEL, LLP
LACKENBACH SIEGEL BUILDING
1 CHASE ROAD
SCARSDALE, NY 10583

COPY MAILED

FEB 2 8 2008

OFFICE OF PETITIONS

In re Application of	:	
Adri Voorn	:	
Application No. 29/204,389	:	ON PETITION
Filed: April 28, 2004	:	
Attorney Docket No. DP--001	:	

This is a decision on the renewed petition under 37 CFR 1.137(b), filed on August 3, 2006, to revive the above-identified application. The delay in responding is regretted.

The application became abandoned for failure to timely respond to the Notice of Allowance and Fee(s) Due mailed June 6, 2005. A Notice of Abandonment was mailed on February 21, 2006.

The petition satisfies the requirements of 37 CFR 1.137(b), in that, petitioner has supplied (1) the reply in the form of $800 for payment of the issue fee and $130 for the filing of a terminal disclaimer; (2) the petition fee of $1,500; and (3) a proper statement of unintentional delay. Therefore, the petition is **GRANTED**.

The terminal disclaimer under 37 CFR 1.137(d), filed August 3, 2006, has been accepted and made of record.

This application file is being referred to the Office of Data Management for further processing into a patent.

Telephone inquiries concerning this decision should be directed to the undersigned at (571) 272-3226.

Andrea Smith
Petitions Examiner
Office of Petitions

UNITED STATES PATENT AND TRADEMARK OFFICE

UNITED STATES DEPARTMENT OF COMMERCE
United States Patent and Trademark Office
Address: COMMISSIONER FOR PATENTS
P.O. Box 1450
Alexandria, Virginia 22313-1450
www.uspto.gov

APPL NO.	FILING OR 371 (c) DATE	ART UNIT	FIL FEE REC'D	ATTY.DOCKET NO	DRAWINGS	TOT CLMS	IND CLMS
29/204,395	04/28/2004	2913	170	094626.00001	9	1	1

CONFIRMATION NO. 6348

CORRECTED FILING RECEIPT

OC000000013248102

Holland & Knight LLP
Suite 4100
100 N. Tampa Street
Tampa, FL 33602-3644

Date Mailed: 07/15/2004

Receipt is acknowledged of this regular Patent Application. It will be considered in its order and you will be notified as to the results of the examination. Be sure to provide the U.S. APPLICATION NUMBER, FILING DATE, NAME OF APPLICANT, and TITLE OF INVENTION when inquiring about this application. Fees transmitted by check or draft are subject to collection. Please verify the accuracy of the data presented on this receipt. **If an error is noted on this Filing Receipt, please write to the Office of Initial Patent Examination's Filing Receipt Corrections, facsimile number 703-746-9195. Please provide a copy of this Filing Receipt with the changes noted thereon. If you received a "Notice to File Missing Parts" for this application, please submit any corrections to this Filing Receipt with your reply to the Notice. When the USPTO processes the reply to the Notice, the USPTO will generate another Filing Receipt incorporating the requested corrections (if appropriate).**

Applicant(s)

Mark A. Porter, Weeki Wachee, FL;

Domestic Priority data as claimed by applicant

Foreign Applications

If Required, Foreign Filing License Granted: 06/16/2004

Projected Publication Date: None, application is not eligible for pre-grant publication

Non-Publication Request: No

Early Publication Request: No

**** SMALL ENTITY ****

Title

Humidor

Preliminary Class

D27

LICENSE FOR FOREIGN FILING UNDER
Title 35, United States Code, Section 184
Title 37, Code of Federal Regulations, 5.11 & 5.15

GRANTED

The applicant has been granted a license under 35 U.S.C. 184, if the phrase "IF REQUIRED, FOREIGN FILING LICENSE GRANTED" followed by a date appears on this form. Such licenses are issued in all applications where the conditions for issuance of a license have been met, regardless of whether or not a license may be required as set forth in 37 CFR 5.15. The scope and limitations of this license are set forth in 37 CFR 5.15(a) unless an earlier license has been issued under 37 CFR 5.15(b). The license is subject to revocation upon written notification. The date indicated is the effective date of the license, unless an earlier license of similar scope has been granted under 37 CFR 5.13 or 5.14.

This license is to be retained by the licensee and may be used at any time on or after the effective date thereof unless it is revoked. This license is automatically transferred to any related applications(s) filed under 37 CFR 1.53(d). This license is not retroactive.

The grant of a license does not in any way lessen the responsibility of a licensee for the security of the subject matter as imposed by any Government contract or the provisions of existing laws relating to espionage and the national security or the export of technical data. Licensees should apprise themselves of current regulations especially with respect to certain countries, of other agencies, particularly the Office of Defense Trade Controls, Department of State (with respect to Arms, Munitions and Implements of War (22 CFR 121-128)); the Office of Export Administration, Department of Commerce (15 CFR 370.10 (j)); the Office of Foreign Assets Control, Department of Treasury (31 CFR Parts 500+) and the Department of Energy.

NOT GRANTED

No license under 35 U.S.C. 184 has been granted at this time, if the phrase "IF REQUIRED, FOREIGN FILING LICENSE GRANTED" DOES NOT appear on this form. Applicant may still petition for a license under 37 CFR 5.12, if a license is desired before the expiration of 6 months from the filing date of the application. If 6 months has lapsed from the filing date of this application and the licensee has not received any indication of a secrecy order under 35 U.S.C. 181, the licensee may foreign file the application pursuant to 37 CFR 5.15(b).

UNITED STATES PATENT AND TRADEMARK OFFICE

COMMISSIONER FOR PATENTS
UNITED STATES PATENT AND TRADEMARK OFFICE
P.O. BOX 1450
ALEXANDRIA, VA 22313-1450
www.uspto.gov

QUARLES & BRADY LLP
411 E. WISCONSIN AVENUE
SUITE 2040
MILWAUKEE, WI 53202-4497

COPY MAILED

DEC 29 2004

OFFICE OF PETITIONS

In re Application of	:	
Kevin Lorimer, John Griffiths,David Wykes,	:	
Ian Heseltine, Philip Stankus, Oliver Bishop	:	
and Nick Smart	:	
Application No. 29/204,416	:	DECISION REFUSING STATUS
Filed: April 29, 2004	:	UNDER 37 CFR 1.47(a)
For: MEDICAL INSTRUMENT	:	

This is a decision in response to the "Petition To Accept A Patent Application Made By Other Inventors On Behalf of Non-Signing Inventor" filed October 21, 2004, which is being treated as apetition under 37 CFR 1.47(a).

A review of the record discloses that the above-identified application was filed on April 29, 2004 without an executed oath or declaration and naming Kevin Lorimer, John Griffiths, David Wykes, Ian Heseltine, Philip Stankus, Oliver Bishopand Nick Smart as joint inventors. On June 21, 2004, a Notice to File Missing Parts of Application was mailed requiring an executed oath or declaration and requisite surcharge. In response, on October 21, 2004, applicant filed, inter alia, a partially executed declaration and the present petition under 37 CFR 1.47(a).

The petition is DISMISSED.

A grantable petition under 37 CFR 1.47(a) requires: (1) proof that the non-signing inventor cannot be reached or refuses to sign the oath or declaration after having been presented with the application papers (specification, claims and drawings); (2) an acceptable oath or declaration in compliance with 35 U.S.C. 115 and 116; (3) the petition fee; and (4) a statement of the last known address of the non-signing inventor. Applicant lacks items (1) set forth above.

Rule 47 applicant is given TWO MONTHS from the mailing date of this decision to reply, correcting the below-noted deficiencies. Any reply should be entitled "Request for Reconsideration of Petition Under 37 CFR 1.47(a)," and should only address the deficiencies noted below, except that the reply may include an oath or declaration executed by the non-signing inventor. Any extensions of time will be governed by 37 CFR 1.136(a).

As to item (1) the petition is defective since applicant does not state that a copy of the application papers (specification, claims and drawings) was sent to the last known address of Mr. Wykes. Ms. Debbie Small states that "[o]n, or thereabouts July 10, 2004, I sent the Declaration for the above-identified patent application to Mr. Wykes at the Seattle, Washington address" and "On September 6, 2004, I sent another copy of the declaration for the subject patent application to Mr. Wykes..." Accordingly, a copy of the complete application papers should be sent to the last known address of Mr. Wykes with a request that he sign the declaration for the patent application.

Petitioner has not shown that inventor Wykes by his conduct refuses to join in the application. Before a refusal can be alleged, applicants must demonstrate that a *bona fide* attempt was made to present a copy of the application papers (specification, including claims, drawings, and oath or declaration) to the non-signing inventor. See MPEP 409.03(d). The evidence only supports a conclusion that the declaration was sent to inventor Wykes. A refusal by an inventor to sign an oath or declaration when the inventor has not been presented with the application papers does not itself suggest that the inventor is refusing to join the application unless it is clear that the inventor understands exactly what he or she is being asked to sign and refuses to accept the application papers. It is reasonable to require that the inventor be presented with the application papers before a petition under 37 CFR 1.47 is granted since such a procedure ensures that the inventor is apprised of the application to which the oath or declaration is directed. *In re Gray*, 115 USPQ 80 (Comm'r Pat. 1956).

Thus, on renewed petition, applicants must establish that the entire application package, including specification, claims and drawings, was presented to the non-signing inventor and he refused to sign. A copy of the application papers should be sent to the last known address of the non-signing inventor, or, if the inventor is represented by counsel, to the address of the non-signing inventor's attorney. Documentary evidence, including copies of the transmittal cover letters and return mail receipts, should be made part of the record.

Further correspondence with respect to this matter should be addressed as follows:

By mail: Mail Stop PETITION
Commissioner for Patents
Post Office Box 1450
Alexandria, VA 22313-1450

By hand: U.S. Patent and Trademark Office
220 20th Street S.
Customer Window, Mail Stop PETITION
Crystal Plaza Two, Lobby, Room 1B03
Arlington, VA 22202

The centralized facsimile number is **(703) 872-9306**.

Any questions concerning this matter may be directed to the undersigned at (571) 272-3204.

Sherry D. Brinkley

Sherry D. Brinkley
Petitions Examiner
Office of Petitions
Office of the Deputy Commissioner
For Patent Examination Policy

UNITED STATES PATENT AND TRADEMARK OFFICE

COMMISSIONER FOR PATENTS
UNITED STATES PATENT AND TRADEMARK OFFICE
P.O. BOX 1450
ALEXANDRIA, VA 22313-1450
www.uspto.gov

QUARLES & BRADY LLP
411 E. WISCONSIN AVENUE.
SUITE 2040
MILWAUKEE WI 53202-4497

COPY MAILED

MAY 27 2005

OFFICE OF PETITIONS

In re Application of
Kevin Lorimer, John Griffiths, David Wykes,
Ian Hesaltine, Philip Stankus, Oliver Bishop and
Nick Smart
Application No. 29/204,416
Filed: April 29, 2004
For: MEDICAL INSTRUMENT

DECISION ACCORDING STATUS
UNDER 37 CFR 1.47(a)

This is a decision on the "Request for Reconsideration of Petition under 37 CFR § 1.47(a)..." filed February 15, 2005.

The petition is **GRANTED**.

The above-identified application was filed on April 29, 2004, without an executed oath or declaration. Kevin Lorimer, John Griffiths, David Wykes, Ian Hesaltine, Philip Stankus, Oliver Bishop and Nick Smart were named as joint inventors. In response to a "Notice to File Missing Parts of Nonprovisional Application," mailed June 21, 2004, applicants filed the initial petition under §1.47(a)(and fee) and late surcharge under §1.16(l). The petition was dismissed in a decision mailed December 29, 2004. In response on February 15, 2005, the present request for reconsideration was filed wherein petitioner argues that the initial petition "clearly demonstrated a diligent effort to reach the Mr. Wykes," and should not have been dismissed.

Petitioner's argument is not well taken. On initial petition, petitioner neither established that he could not find or reach the inventor after diligent effort nor that the inventor had refused to join in the application after having been presented with all of the application papers.

Petitioner has now clarified that complete application papers, including the specification, claim and drawings, were sent to Mr. Wykes at his last known address, stating "[i]n summary, on several occasions Debbie Small mailed documents to Mr. Wykes at his last known addressed in Seattle, Washington without receiving a reply, George Haas mailed a complete copy of the subject application to Mr. Wykes at that address requesting him to sign the associated declaration and failed to receive a reply, and Mr. Haas used several means to locate a telephone number for Mr. Wykes to no avail." Thus, it can now be concluded that inventor Wykes' failure to respond to the request to sign the declaration constitutes a refusal within the meaning of § 1.47(a).

In view of the above, the declaration filed October 21, 2004 is being accepted as having complied with 37 C.F.R. § 1.47(a).

This application is hereby accorded Rule 1.47(a) status.

As provided in new Rule 1.47(c), this Office will forward notice of this application's filing to the non-signing inventors at the address given in the petition. Notice of the filing of this application will also be published in the Official Gazette.

The application file is being forwarded to Technology Center 1641 for appropriate action.

Telephone inquiries regarding this decision should be directed to the undersigned at (571) 272-3204.

Sherry D. Brinkley

Sherry D. Brinkley
Petitions Examiner
Office of Petitions
Office of the Deputy Commissioner
for Patent Examination Policy

UNITED STATES PATENT AND TRADEMARK OFFICE

COMMISSIONER FOR PATENTS
UNITED STATES PATENT AND TRADEMARK OFFICE
P.O. BOX 1450
ALEXANDRIA, VA 22313-1450
www.uspto.gov

DAVID WYKES
845 BELLEVUE PLACE EAST, APT. 206
SEATTLE, WA 98102

COPY MAILED

MAY 27 2005

OFFICE OF PETITIONS

In re Application of
Kevin Lorimer, John Griffiths, David Wykes,
Ian Hesaltine, Philip Stankus, Oliver Bishop and
Nick Smart
Application No. 29/204,416
Filed: April 29, 2004
For: MEDICAL INSTRUMENT

LETTER

Dear Mr. Wykes:

You are named as a joint inventor in the above-identified United States patent application filed under the provisions of 35 U.S.C. 116 (United States Code) and 37 CFR 1.47(a), Rules of Practice in Patent Cases. Should a patent be granted on the application you will be designated therein as a joint inventor.

As a named inventor you are entitled to inspect any paper in the file wrapper of the application, order copies of all or any part thereof (at a prepaid cost per 37 CFR 1.19) or make your position of record in the application. Alternatively, you may arrange to do any of the preceding through a registered patent attorney or agent presenting written authorization from you. If you care to join the application, counsel of record (see below) would presumably assist you. Joining in the application would entail the filing of an appropriate oath or declaration by you pursuant to 37 CFR 1.63.

Telephone inquiries regarding this communication should be directed to the undersigned at (571) 272-3204. Requests for information regarding your application should be directed to the File Information Unit at (703) 308-2733. Information regarding how to pay for and order a copy of the application, or a specific paper in the application should be directed to the Certification Division at (703) 308-9726 or 1-800-972-6382 (outside the Washington D.C. area).

Sherry D. Brinkley
Petitions Examiner
Office of Petitions
Office of the Deputy Commissioner
For Patent Examination Policy

cc: QUARLES & BRADY LLP
411 E. WISCONSIN AVENUE
SUITE 2040
MILWAUKEE WI 53202-4497

SPE RESPONSE FOR CERTIFICATE OF CORRECTION

Paper No.: _____

DATE : July 14, 2005

TO SPE OF : ART UNIT 2913

SUBJECT : Request for Certificate of Correction on Patent No.: D501,173

A response is requested with respect to the accompanying request for a certificate of correction.

Please complete this form and return with file, within **7** days to:
Palm location **7580, Certificates of Correction Branch – South Tower – 9A22**
If response is for an IFW, **return to employee (named below) via PUBSCofC Team in MADRAS.**
With respect to the change(s) requested, correcting Office and/or Applicant's errors, should the patent read as shown in the certificate of correction (COCIN)? No new matter should be introduced, nor should the scope or meaning of the claims be changed.

Magdalene Talley

Thank You For Your Assistance

Certificates of Correction Branch
Tel. No. 703-308-9309 ext. 116

The request for issuing the above-identified correction(s) is hereby:
Note your decision on the appropriate box.

- ☑ **Approved** — **All** changes apply.
- ☐ **Approved in Part** — Specify below which changes **do not** apply.
- ☐ **Denied** — State the reasons for denial below.

Comments:

STACIA CADMUS
PRIMARY EXAMINER

SPE **Art Unit**

UNITED STATES PATENT AND TRADEMARK OFFICE

Commissioner for Patents
United States Patent and Trademark Office
P.O. Box 1450
Alexandria, VA 22313-1450
www.uspto.gov

Paper No.

QUARLES & BRADY LLP
411 E. WISCONSIN AVENUE
SUITE 2040
MILWAUKEE, WI 53202-4497

COPY MAILED

FEB 11 2005

OFFICE OF PETITIONS

In re Application of Kevin Lorimer, John Griffiths, David Wykes, Ian Heseltine, Philip Stankus, Oliver Bishop and Nick Smart Application No. 29/204,449 Filing Date: April 29, 2004 Attorney Docket No. 121215.00005 Title: DOCKING DEVICE FOR A MEDICAL INSTRUMENT	DECISION REFUSING STATUS UNDER 37 CFR 1.47(a)

This is a decision on the "PETITION TO ACCEPT A PATENT APPLICATION MADE BY OTHER INVENTORS ON BEHALF OF NON-SIGNING INVENTOR" filed October 21, 2004.

The petition is **DISMISSED**.

Rule 47 applicant is given **TWO MONTHS** from the mailing date of this decision to reply, correcting the below-noted deficiencies. Any reply should be entitled "Request for Reconsideration of Petition Under 37 C.F.R. §1.47(a)," and should only address the deficiencies noted below, except that the reply may include an oath or declaration executed by the non-signing inventor. **Failure to respond will result in abandonment of the application.** Any extensions of time will be governed by 37 C.F.R. § 1.136(a).

The above-identified application was filed on April 29, 2004, with an unexecuted declaration. Accordingly, on June 21, 2004, the Office mailed a "Notice to File Missing Parts of Application," requiring an executed oath or declaration in compliance with § 1.63, and the surcharge under § 1.16(e) for its late filing. This Notice set a two-month period for reply, with extensions of time obtainable under § 1.136(a).

Applicants replied with the instant petition under § 1.47; payment of the petition fee and of the late surcharge; and a declaration executed by joint inventors Lorimer, Griffiths, Heseltine, Stankus, Bishop and Smart on behalf of themselves and on behalf of non-signing joint inventor David Wykes. This reply was made timely by an accompanying petition for an extension for

response within the second month (and fee). Rule 47 applicants assert that status under § 1.47 is proper because the co-inventor, David Wykes, has failed to respond to attempts to have him sign the declaration.

A grantable petition under 37 CFR § 1.47(a) requires: (1) an acceptable oath or declaration in compliance with 37 C.F.R. § 1.63 and 1.64 or 1.175; (2) proof that the non-signing inventor cannot be found or reached after diligent effort, or refuses to sign the oath or declaration after having been presented with the application papers (specification, claims and drawings); (3) the petition fee; and (4) a statement of the last known address of the non-signing inventor. The petition included payment of the petition fee; and a statement of the last known address of the non-signing inventor.

However, the petition is not grantable because requirement (2) has not been satisfied. Applicants have not shown that inventor Wykes cannot be found or reached to join in the application. The Royal Mail receipt provides evidence that the subject application was sent to Mr. Wykes at his last known address in Seattle, Washington. There is no evidence indicating that the correspondence was undeliverable at that address. Thus, the evidence presented supports a conclusion that inventor Wykes can be reached, but is not responding.

At the same time, petitioner has not shown that, by not responding, inventor Wykes has refused to join in the application. Before a refusal can be alleged, applicants must demonstrate that a *bona fide* attempt was made to present a copy of the application papers (specification, including claims, drawings, and oath or declaration) to the non-signing inventor. See MPEP 409.03(d). The evidence only supports a conclusion that the declaration for patent was presented to inventor Wykes. In her statement, Ms. Small states that "I sent yet another copy of the papers for the other invention to Mr. Wykes." Neither the statement of Ms. Small nor those of attorney George Haas or any other showings of record establish that the papers for this application were sent to inventor Wykes. A refusal by an inventor to sign an oath or declaration when the inventor has not been presented with the application papers does not itself suggest that the inventor is refusing to join the application unless it is clear that the inventor understands exactly what he or she is being asked to sign and refuses to accept the application papers. It is reasonable to require that the inventor be presented with the application papers before a petition under 37 CFR 1.47 is granted since such a procedure ensures that the inventor is apprised of the application to which the oath or declaration is directed. *In re Gray*, 115 USPQ 80 (Comm'r Pat. 1956).

Thus, on renewed petition, applicants must establish that the entire application package, including specification, claims and drawings, was presented to non-signing inventor Wykes and he subsequently refused to sign. If they have not already been sent, a copy of the application papers should be sent to the last known address of the non-signing inventor, or, if the inventor is represented by counsel, to the address of the non-signing inventor's attorney.

Moreover, the declaration for patent submitted must be in compliance with § 1.63. It is unclear whether the declaration includes the complete mailing addresses for all of the inventors (i.e. "SNAP HOUSE"). Petitioner is reminded of the provisions of § 1.76 which allow for correction of mailing addresses in declarations by use of an application data sheet.

Further correspondence with respect to this decision should be addressed as follows:

By mail: Mail Stop Petition
Commissioner for Patents
P.O. Box 1450
Alexandria, VA 22313-1450

By fax: (703) 872-9306
ATTN: Office of Petitions

By hand: Customer Service Window
Randolph Building
401 Dulany Street
Alexandria, VA 22314

Telephone inquiries related to this decision may be directed to the undersigned at (571) 272-3219).

Nancy Johnson

Nancy Johnson
Senior Petitions Attorney
Office of Petitions

UNITED STATES PATENT AND TRADEMARK OFFICE

Commissioner for Patents
United States Patent and Trademark Office
P.O. Box 1450
Alexandria, VA 22313-1450
www.uspto.gov

Paper No.

QUARLES & BRADY LLP
411 E. WISCONSIN AVENUE
SUITE 2040
MILWAUKEE, WI 53202-4497

COPY MAILED
MAY 11 2005
OFFICE OF PETITIONS

In re Application of Kevin Lorimer, John Griffiths, David Wykes, Ian Heseltine, Philip Stankus, Oliver Bishop and Nick Smart Application No. 29/204,449 Filing Date: April 29, 2004 Attorney Docket No. 121215.00005 Title: DOCKING DEVICE FOR A MEDICAL INSTRUMENT	DECISION ACCORDING STATUS UNDER 37 CFR 1.47(a)

This is a decision on the "REQUEST FOR RECONSIDERATION OF PETITION UNDER 37 C.F.R. 1.47(A) TO ACCEPT A PATENT APPLICATION MADE BY OTHER INVENTORS ON BEHALF OF NON-SIGNING INVENTOR" filed March 28, 2005.

The petition is **GRANTED**.

The above-identified application was filed on April 29, 2004, with an unexecuted declaration. In response to a "Notice to File Missing Parts of Application" mailed June 21, 2004, applicants filed, on October 21, 2004, the initial petition under § 1.47(a).

However, the petition was dismissed for failure to show that non-signing inventor David Wykes was unavailable to join in the application. Applicants failed to show that a bona fide attempt had been made to present all of the application papers to the non-signing inventor, such that, his refusal could be inferred from his conduct in not responding (Decision mailed February 11, 2005).

On renewed petition, by declaration of patent attorney George Haas, petitioner has shown that a complete copy of the application was presented to inventor Wykes by certified mail. Moreover, inventor Wykes has not responded to the written request to sign the declaration.

Furthermore, petitioner clarified that the address of inventor Bishop on the declaration as "Snap House" is a complete address.

In view thereof, it is concluded that petitioner has now met all of the requirements of § 1.47(a).

The declaration filed October 21, 2004, and the petition have been reviewed and both are now found in compliance with 37 C.F.R. § 1.47(a).

This application is hereby accorded Rule 1.47(a) status.

As provided in new Rule 1.47(c), this Office will forward notice of this application's filing to the non-signing inventor at the address given in the petition. Notice of the filing of this application will also be published in the Official Gazette.

The application file is being forwarded to the Office of Initial Patent Examination (OIPE) for completion of pre-examination processing.

Telephone inquiries regarding this decision should be directed to the undersigned at (571) 272-3219.

Nancy Johnson

Nancy Johnson
Senior Petitions Attorney
Office of Petitions

UNITED STATES PATENT AND TRADEMARK OFFICE

Commissioner for Patents
United States Patent and Trademark Office
P.O. Box 1450
Alexandria, VA 22313-1450
www.uspto.gov

Paper No.

David Wykes
845 Bellevus Place East
Apt. 206
Seattle, WA 98102

COPY MAILED

MAY 11 2005

OFFICE OF PETITIONS

In re Application of :
Kevin Lorimer, John Griffiths, :
David Wykes, Ian Heseltine, :
Philip Stankus, Oliver Bishop :
and Nick Smart : LETTER
Application No. 29/204,449 :
Filing Date: April 29, 2004 :
Attorney Docket No. 121215.00005 :
Title: DOCKING DEVICE FOR A :
MEDICAL INSTRUMENT :

Dear Mr. Wykes:

You are named as a joint inventor in the above-identified United States patent application filed under the provisions of 35 U.S.C. 116 (United States Code) and 37 CFR 1.47(a), Rules of Practice in Patent Cases. Should a patent be granted on the application you will be designated therein as a joint inventor.

As a named inventor you are entitled to inspect any paper in the file wrapper of the application, order copies of all or any part thereof (at a prepaid cost per 37 CFR 1.19) or make your position of record in the application. Alternatively, you may arrange to do any of the preceding through a registered patent attorney or agent presenting written authorization from you. If you care to join the application, counsel of record (see below) would presumably assist you. Joining in the application would entail the filing of an appropriate oath or declaration by you pursuant to 37 CFR 1.63.

Telephone inquiries regarding this communication should be directed to Petitions Attorney Nancy Johnson at (571) 272-3219. Requests for information regarding your application should be directed to the File Information Unit at (703) 308-2733. Information regarding how to pay for and order a copy of the application, or a specific paper in the application, should be directed to Certification Division at (703) 308-9726 or 1-800-972-6382 (outside the Washington D.C. area).

Nancy Johnson
Senior Petitions Attorney
Office of Petitions

QUARLES & BRADY LLP
411 E. WISCONSIN AVENUE
SUITE 2040
MILWAUKEE, WI 53202-4497

UNITED STATES PATENT AND TRADEMARK OFFICE

Commissioner for Patents
United States Patent and Trademark Office
P.O. Box 1450
Alexandria, VA 22313-1450
www.uspto.gov

TROXELL LAW OFFICE PLLC
SUITE 1404
5205 LEESBURG PIKE
FALLS CHURCH VA 22041

COPY MAILED

JUN 3 0 2008

OFFICE OF PETITIONS

In re Application of	:	
Cen et al.	:	
Application No. 29/204499	:	
Filing or 371(c) Date: 04/30/2004	:	ON PETITION
Patent Number: D521615	:	
Issue Date: 05/23/2006	:	
Title of Invention:	:	
COMBINED PAIR OF FAUCETS AND	:	
SINK	:	

This is a decision on the Petition Requesting Duplicate Letters Patent, filed December 17, 2007. The petition is properly treated under 37 CFR 1.182. The delay in treating this petition is regetted.

The petition is **DISMISSED**.

Petitioner files the present petition requesting a duplicate Letters Patent, and in support of the petition asserts that the original letters Patent was not received. Petitioner includes an authorization to charge $130.00 as the petition fee to Petitioner's deposit account.

Petitioner is advised that where nonreceipt of the letters Patent is alleged (no petition fee), the showing required is the same as that set forth in MPEP 711.03(c).

Applicable Law, Rules and MPEP

The MPEP 711.03(c)A, Petition To Withdraw Holding of Abandonment Based on Failure To Receive Office Action, provides

> In Delgar v. Schulyer, 172 USPQ 513 (D.D.C. 1971), the court decided that the Office should mail a new Notice of Allowance in view of the evidence presented in support of the contention that the applicant's representative did not receive the original Notice of Allowance. Under the reasoning of Delgar, an allegation that an Office action was never received may be considered in a petition to withdraw the holding of abandonment. If adequately supported, the Office may grant the petition to withdraw the holding of abandonment and remail the Office action. That is, the reasoning of Delgar is applicable regardless of whether an application is held abandoned for failure to timely pay the issue fee (35 U.S.C. 151) or for failure to prosecute (35 U.S.C. 133). To minimize costs and burdens to practitioners and the Office, the Office has modified the showing required to establish nonreceipt of an Office action. **The showing required to establish nonreceipt of an Office communication must include a statement from the practitioner stating that the Office communication was not received by the practitioner and attesting to the fact that a search of the file jacket and docket records indicates that the Office communication was not received. A copy of the docket record where the nonreceived Office communication would have been entered had it been received and docketed must be attached to and referenced in practitioner's statement.** For example, if a three month period for reply was set in the nonreceived Office action, a copy of the docket report showing all replies docketed for a date three months from the mail date of the nonreceived Office action must be submitted as documentary proof of nonreceipt of the Office action. **The showing outlined above may not be sufficient if there are circumstances that point to a conclusion that the Office action may have been lost after receipt rather than a conclusion that the Office action was lost in the mail (e.g., if the practitioner has a history of not receiving Office actions**). (Emphasis supplied)

MPEP 711.03(c)

The petition is dismissed without prejudice. Petitioner should file a request for reconsideration of petition and include the necessary statement(s) and evidence.

Alternatively, Petitioner may file a request for reconsideration of petition and include the appropriate petition fee. Petitioner is advised that the fee for a petition under 37 CFR 1.182 increased to $400.00 effective December 8, 2004. Before the petition may be addressed on its merits, the petition fee is required.

Further correspondence with respect to this matter should be addressed as follows:

By mail: Mail Stop PETITIONS

Director for Patents
Post Office Box 1450
Alexandria, VA 22313-1450

By hand: Customer Service Window
Mail Stop Petitions
Randolph Building
401 Dulany Street
Alexandria, VA 22314

By fax: (571) 273-8300
ATTN: Office of Petitions

Any questions concerning this matter may be directed to the undersigned at (571) 272-3232.

Derek L. Woods
Attorney
Office of Petitions

UNITED STATES PATENT AND TRADEMARK OFFICE

Commissioner for Patents
United States Patent and Trademark Office
P.O. Box 1450
Alexandria, VA 22313-1450
www.uspto.gov

Charles N.J. Ruggiero, Esq.
Ohlandt, Greeley, Ruggiero & Perle, L.L.P.
10th Floor
One Landmark Square
Stamford CT 06901-2682

COPY MAILED

FEB 10 2005

OFFICE OF PETITIONS

In re Application of	:	
Hui Quan Li	:	
Application No. 29/204,545	:	DECISION ACCORDING STATUS
Filed: April 29, 2004	:	UNDER 37 C.F.R. §1.47(b)
Attorney Docket Number: 833.0072USD	:	
Title of Invention: ICE CREAM MAKER	:	

This is in response to the petition for status under 37 C.F.R. §1.47(b), filed December 20, 2004.

The petition is **GRANTED**.

Applicant has satisfied the requirements of §1.47(b)[1]. Applicant, by declaration of persons with first hand knowledge and documentary evidence, demonstrated that the non-signing inventor has refused to sign the declaration. This declaration has been reviewed and is found in compliance with 1.63 and 1.64. Applicant paid the petition fee and included a statement of the non-signing inventor's last known address in the petition. Proprietary interest in the application has been established.

This application is hereby accorded Rule 1.47(b) status.

As provided in new Rule 1.47(c), this Office will forward notice of this application's filing to the non-signing inventor at the address given in the petition. Notice of the filing of this application will also be published in the Official Gazette.

The application file is being forwarded to the Office of Initial Patent Examination for processing.

Telephone inquiries regarding this decision should be directed to the undersigned at (571) 272-3215.

Charlema R. Grant
Petitions Attorney
Office of Petitions

---

[1] A grantable petition under 37 C.F.R. §1.47(b) requires: (1) proof that the non-signing inventor cannot be reached or refuses to sign the oath or declaration; (2) an acceptable oath or declaration; (3) the petition fee; (4) a statement of last known address of the non-signing inventor; (5) proof of proprietary interest; and (6) proof of irreparable damage.

UNITED STATES PATENT AND TRADEMARK OFFICE

Commissioner for Patents
United States Patent and Trademark Office
P.O. Box 1450
Alexandria, VA 22313-1450
www.uspto.gov

Hui Quan Li
Huanzhen Road
Yanbu, Nanhai
Guandog, China
AIRMAIL

COPY MAILED

FEB 10 2005

OFFICE OF PETITIONS

In re Application of
Hui Quan Li
Application No. 29/204,545
Filed: April 29, 2004
Attorney Docket Number: 833.0072USD
Title of Invention: ICE CREAM MAKER

LETTER

Dear Mr. Li:

You are named as the sole inventor in the above-identified United States patent application filed under the provisions of 35 U.S.C. 118 (United States Code) and 37 CFR 1.47(b). Should a patent be granted on the application you will be designated therein as the sole inventor.

As the named inventor you are entitled to inspect any paper in the file wrapper of the application, order copies of all or any part thereof (at a prepaid cost per 37 CFR 1.19) or make your position of record in the application. Alternatively, you may arrange to do any of the preceding through a registered patent attorney or agent presenting written authorization from you. If you care to join the application, counsel of record (see below) would presumably assist you. Joining in the application would entail the filing of an appropriate oath or declaration by you pursuant to 37 CFR 1.63.

Telephone inquiries regarding this communication should be directed to Petitions Attorney Charlema R. Grant at (571) 272-3215. Requests for information regarding your application should be directed to the File Information Unit at (703) 308-2733. Information regarding how to pay for and order a copy of the application, or a specific paper in the application, should be directed to Certification Division at (703) 308-9726 or 1-800-972-6382 (outside the Washington D.C. area).

Charlema R. Grant
Petitions Attorney
Office of Petitions

Charles N.J. Ruggiero, Esq.
Ohlandt, Greeley, Ruggiero & Perle, L.L.P.
10th Floor
One Landmark Square
Stamford CT 06901-2682

UNITED STATES PATENT AND TRADEMARK OFFICE

Commissioner for Patents
United States Patent and Trademark Office
P.O. Box 1450
Alexandria, VA 22313-1450
www.uspto.gov

Date :05/25/07

Patent No. : D538654 S
Ser. No. : 29/204,551
Inventor(s) : SEIDITA, THOMAS M.
Issued : 03/20/07
Title : **CROWN-LIKE PLASTIC CLOSURE**
Docket No. : HWR-0154DP

Re: Request for Certificate of Correction

Consideration has been given your request for the issuance of a certificate of correction for the above-identified patent under the provisions of Rule(s) 1.322 and/or 1.323.

Assignees' names and addresses (assignment data) printed in a patent, are based *solely* on information supplied in the appropriate space for identifying the assignment data, i.e., item 3 of the Issue Fee Transmittal Form PTOL-85B. Granting of a request under 37 CFR 3.81(b) is required to correct applicant's error providing ***incorrect or erroneous*** assignment data, *before* issuance of a Certificate of Correction, under 37 CFR 1.323 *(see Manual of Patent Examining Procedures (M.P.E.P) Chp.1400, sect. 1481).* This procedure is required *at any time after the issue fee is paid*, including after issuance of the patent.

In view of the foregoing, your request, in this mater, is hereby denied.

A request to correct the Assignee under 37 CFR 3.81(b) should include:

A. **the processing fee set forth in 37 CFR 1.117(h) (currently $130);**
B. a statement that the failure to include the correct assignee name on the PTOL-85B was inadvertent; and
C. a copy of the Notice of Recordation of Assignment Document, reflecting the reel and frame number where the assignment(s) is recorded and/or reflecting proof of *the date* the assignment was submitted for recordation.

In the Request, Applicant(s) may request that the file be forwarded to Certificates of Correction Branch, for issuance of a Certificate of Correction, if the Request is granted.

Any request under 37 CFR 3.81(b) should be directed to the following address or facsimile number:

By mail: Mail Stop PETITIONS
Commissioner for Patents
Post Office Box 1450
Alexandria, VA 22313-1450

By hand: Customer Service Window
Mail Stop Petitions
Randolph Building
401 Dulany Street
Alexandria, VA 22314

By fax: (703) 872-9306
ATTN: Office of Petitions

If a fee (currently $100) was previously submitted for consideration of a Request for Certificate of Correction, under CFR 1.323, to correct assignment data, , no additional fee is required.

Lamonte M. Newsome
For Cecelia Newman
Decisions & Certificates
of Correction Branch
(703) 308-9390 #112 or (703) 308-8309

KNOBLE, YOSHIDA & DUNLEAVY
EIGHT PENN CENTER
SUITE 1350, 1628 JOHN F KENNEDY BLVD
PHILADELPHIA PA 19103

LMN

UNITED STATES PATENT AND TRADEMARK OFFICE

Commissioner for Patents
United States Patent and Trademark Office
P.O. Box 1450
Alexandria, VA 22313-1450
www.uspto.gov

KNOBLE YOSHIDA & DUNLEAVY
EIGHT PENN CENTER
1628 JOHN F. KENNEDY BLVD., SUITE 1350
PHILADELPHIA, PA 19103

COPY MAILED

OCT 15 2007

OFFICE OF PETITIONS

In re Patent No. D538654	:	
Issue Date: May 20, 2007	:	
Application No. 29/204,551	:	ON PETITION
Filed: April 30, 2004	:	
Attorney Docket No. HWR-0154DP	:	

This is a decision on the petition filed June 22, 2007, which is being treated as a petition under 37 CFR 3.81(b)[1] to correct assignee's names on the front page of the above-identified patent by way of a Certificate of Correction.

The petition is **granted.**

Telephone inquiries concerning this matter may be directed to the undersigned at (571) 272-3210. Any questions concerning the issuance of the Certificate of Correction should be directed to the Certificates of Correction Branch at (703) 305-8309.

This application is being forwarded to the Certificates of Correction Branch for issuance of the requested Certificate of Correction.

Irvin Dingle
Petitions Examiner
Office of Petitions

[1] See Official Gazette of June 22, 2004

UNITED STATES PATENT AND TRADEMARK OFFICE

Commissioner for Patents
United States Patent and Trademark Office
P.O. Box 1450
Alexandria, VA 22313-1450
www.uspto.gov
DIW Feb-06

MOTOROLA, INC.
101 TOURNAMENT DRIVE
HORSHAM PA 19044

COPY MAILED

FEB 0 3 2006

OFFICE OF PETITIONS

In re Application of	:	
Storti et al.	:	DECISION ON PETITION TO
Application No. 29/204,579	:	WITHDRAW HOLDING OF
Filed: 30 April, 2004	:	ABANDONMENT
Attorney Docket No. BCS03494	:	

This is a decision on the petition filed on 5 January, 2006, to withdraw the holding of abandonment in the above-identified application.

The petition is **GRANTED**.

The application was held abandoned for failure to timely submit the issue fee in response to the Notice of Allowance and Fee(s) Due mailed on 6 July, 2005, which set a three (3) month statutory period for reply. Notice of Abandonment was mailed on 12 December, 2005.

Petitioners assert that the Notice of Allowance mailed on 6 July, 2005, was never received.

In the absence of any irregularity in the mailing of the final Office action, there is a strong presumption that the final Office action was properly mailed to practitioner at the address of record. This presumption may be overcome by a showing that the final Office action was not in fact received. The showing required to establish the failure to receive an Office communication must include a statement from the practitioner stating that the Office communication was not received by the practitioner and attesting to the fact that a search of the file jacket and docket records indicates that the Office action was not received. A copy of the docket record where the non-received Office action would have been entered had it been received and

docketed must be attached to and referenced in practitioner's statement. See "Withdrawing the Holding of Abandonment When Office Actions Are Not Received" 1156 Official Gazette 53 (November 16, 1993) and M.P.E.P. § 711.03(c). The showing outlined above may not be sufficient if there are circumstances that point to a conclusion that the final Office action may have been lost after receipt rather than a conclusion that the final Office action was lost in the mail.

A review of the record indicates that the Office action was properly mailed to the practitioner of record at the correspondence address of record at the time of mailing. Thus, there was no irregularity in mailing the Office action on the part of the United States Patent and Trademark Office.

In support of the petition, the petitioner has submitted verified statements from the practitioner, Benjamin D. Driscoll, stating that the Office communication was not received by the practicioner, and attesting to the fact that a search of the file jacket indicates that the Office action was not received. Copies of docket records for the above-identified application where the non-received Office action would have been entered had it been received and docketed are attached.

The petitioner has made a sufficient showing of nonreceipt of the Office action. Accordingly, the Notice of Abandonment is hereby vacated and the holding of abandonment withdrawn.

The petition is **GRANTED.**

The application file is being referred to Technology Center 2900 technical support staff for remailing of the Notice of Allowance and Fee(s) Due. The period for reply will be reset from the mailing date thereof.

Telephone inquiries concerning this matter may be directed to the undersigned at (571)272-3231.

D Wood

Douglas I. Wood
Senior Petitions Attorney
Office of Petitions

SPE RESPONSE FOR CERTIFICATE OF CORRECTION

Paper No.:20070507

DATE : May 07, 2007

TO SPE OF : ART UNIT 2913

SUBJECT : Request for Certificate of Correction on Patent No.: D504787

A response is requested with respect to the accompanying request for a certificate of correction.

Please complete this form and return with file, within **7** days to:
Certificates of Correction Branch - ST (South Tower) 9A22
Palm location **7590** - Tel. No. (703) 305-8309

With respect to the change(s) requested, correcting Office and/or Applicant's errors, should the patent read as shown in the certificate of correction? No new matter should be introduced, nor should the scope or meaning of the claims be changed.

Thank You For Your Assistance **Certificates of Correction Branch**

The request for issuing the above-identified correction(s) is hereby:

Note your decision on the appropriated box.

☒ **Approved**	All changes apply.
☐ **Approved in Part**	Specify below which changes **do not** apply.
☐ **Denied**	State the reasons for denial below.

Comments:

Caron D. Veynar

SPE: Caron Veynar Art Unit 2913

PTOL-306 (Rev. 7/03) U.S. DEPARTMENT OF COMMERCE Patent and Trademark Office

CARON D. VEYNAR
SUPERVISORY PATENT EXAMINER

UNITED STATES PATENT AND TRADEMARK OFFICE

Commissioner for Patents
United States Patent and Trademark Office
P.O. Box 1450
Alexandria, VA 22313-1450
www.uspto.gov

AUG 04 2004

BANNER & WITCOFF
1001 G STREET N W
SUITE 1100
WASHINGTON DC 20001

In re Application of	:	
Philip A. Frank	:	
Serial No.: 29/204,610	:	DECISION ON PETITION
Filed: May 3, 2004	:	
For: Portion of a Watch	:	

This is in response to the petition applicant filed on June 28, 2004, to make the above-identified application special under the provisions of 37 CFR 1.102(d).

Applicant has satisfied the provisions set forth in M.P.E.P. 708.02, VIII, thus the petition is **GRANTED**.

The application will be forwarded to the examiner for action on the merits commensurate with this decision.

Should there be any questions with regard to this letter please contact John Kittle by letter addressed to the Director, Technology Center 3700/2900, P.O. Box 1450 Alexandria, VA 22313-1450, or by telephone at (703) 308-0873 or by facsimile transmission at (703) 308-3139.

John E. Kittle

John E. Kittle
Director
Technology Center 3700/2900

UNITED STATES PATENT AND TRADEMARK OFFICE

Commissioner for Patents
United States Patent and Trademark Office
P.O. Box 1450
Alexandria, VA 22313-1450
www.uspto.gov

NOV 23 2005

BANNER & WITCOFF
1001 G STREET N W
SUITE 1100
WASHINGTON DC 20001

In re Application of	:	
Scott H. Wilson	:	
Serial No.: 29/204,614	:	DECISION ON PETITION
Filed: May 3, 2004	:	
For: Watch	:	

This is in response to the petition applicant filed on June 25, 2004 to make the above-identified application special under the provisions of 37 CFR 1.102(d).

Applicant has satisfied the provisions set forth in M.P.E.P. 708.02, VIII, thus the petition is **GRANTED**.

The application will be forwarded to the examiner for action on the merits commensurate with this decision.

Should there be any questions with regard to this letter please contact John Kittle by letter addressed to the Director, Technology Center 3700/2900, P.O. Box 1450 Alexandria, VA 22313-1450, or by telephone at (571) 272-2975 or by facsimile transmission at (571) 273-0275.

John E. Kittle

John E. Kittle
Director
Technology Center 3700/2900

UNITED STATES PATENT AND TRADEMARK OFFICE

Commissioner for Patents
United States Patent and Trademark Office
P.O. Box 1450
Alexandria, VA 22313-1450
www.uspto.gov

BANNER & WITCOFF
1001 G STREET NW
SUITE 1100
WASHINGTON, DC 20001

COPY MAILED

MAR 2 3 2005

OFFICE OF PETITIONS

In re Application of	:
Scott H. Wilson	:DECISION GRANTING PETITION
Application No. 29/204,614	:UNDER 37 CFR 1.313(c)(3
Filed: May 3, 2004	:
Attorney Docket No. 015127.00306	:

This is a decision on the petition under 37 CFR 1.313(c)(3), filed March 22, 2005, to withdraw the above-identified application from issue after payment of the issue fee.

The petition is **GRANTED**.

The above-identified application is hereby withdrawn from issue in favor of a continued prosecution application (CPA) under 37 CFR 1.53(d).

Petitioner is advised that the issue fee paid on December 22, 2004 in the parent application is not refundable nor can it be applied towards any new Notice of Allowance which may issue on the CPA filed March 22, 2005.

Telephone inquiries should be directed to the undersigned at (571) 272-3218.

The application is being forwarded to Technology Center AU 2913 for processing of the CPA and for consideration of the concurrently filed Information Disclosure Statement.

Frances Hicks
Petitions Examiner
Office of Petitions
Office of the Deputy Commissioner
for Patent Examination Policy

UNITED STATES PATENT AND TRADEMARK OFFICE

Commissioner for Patents
United States Patent and Trademark Office
P.O. Box 1450
Alexandria, VA 22313-1450
www.uspto.gov

AUG 04 2004

BANNER & WITCOFF
1001 G STREET N W
SUITE 1100
WASHINGTON DC 20001

In re Application of	:	
Aurelie C. Tu	:	
Serial No.: 29/204,615	:	DECISION ON PETITION
Filed: May 3, 2004	:	
For: Portion of a Watch	:	

This is in response to the petition applicant filed on June 22, 2004, to make the above-identified application special under the provisions of 37 CFR 1.102(d).

Applicant has satisfied the provisions set forth in M.P.E.P. 708.02, VIII, thus the petition is **GRANTED**.

The application will be forwarded to the examiner for action on the merits commensurate with this decision.

Should there be any questions with regard to this letter please contact John Kittle by letter addressed to the Director, Technology Center 3700/2900, P.O. Box 1450 Alexandria, VA 22313-1450, or by telephone at (703) 308-0873 or by facsimile transmission at (703) 308-3139.

John E. Kittle

John E. Kittle
Director
Technology Center 3700/2900

UNITED STATES PATENT AND TRADEMARK OFFICE

Commissioner for Patents
United States Patent and Trademark Office
P.O. Box 1450
Alexandria, VA 22313-1450
www.uspto.gov

SEP 02 2004

BANNER & WITCOFF
1001 G STREET N W
SUITE 1100
WASHINGTON DC 20001

In re Application of	:	
Scott H. Wilson	:	
Serial No.: 29/204,616	:	DECISION ON PETITION
Filed: May 3, 2004	:	
For: Portion of a Watch	:	

This is in response to the petition applicant filed on June 25, 2004 to make the above-identified application special under the provisions of 37 CFR 1.102(d).

Applicant has satisfied the provisions set forth in M.P.E.P. 708.02, VIII, thus the petition is **GRANTED**.

The application will be forwarded to the examiner for action on the merits commensurate with this decision.

Should there be any questions with regard to this letter please contact John Kittle by letter addressed to the Director, Technology Center 3700/2900, P.O. Box 1450 Alexandria, VA 22313-1450, or by telephone at (703) 308-0873 or by facsimile transmission at (703) 308-3139.

John E. Kittle
Director
Technology Center 3700/2900

UNITED STATES PATENT AND TRADEMARK OFFICE

Commissioner for Patents
United States Patent and Trademark Office
P.O. Box 1450
Alexandria, VA 22313-1450
www.uspto.gov

BANNER & WITCOFF
1001 G STREET NW
SUITE 1100
WASHINGTON, DC 20001

COPY MAILED

MAR 2 3 2005

OFFICE OF PETITIONS

In re Application of	:
Scott H. Wilson	:DECISION GRANTING PETITION
Application No. 29/204,616	:UNDER 37 CFR 1.313(c)(3
Filed: May 3, 2004	:
Attorney Docket No. 015127.00313	:

This is a decision on the petition under 37 CFR 1.313(c)(3), filed March 22, 2005, to withdraw the above-identified application from issue after payment of the issue fee.

The petition is **GRANTED**.

The above-identified application is hereby withdrawn from issue in favor of a continued prosecution application (CPA) under 37 CFR 1.53(d).

Petitioner is advised that the issue fee paid on December 22, 2004 in the parent application is not refundable nor can it be applied towards any new Notice of Allowance which may issue on the CPA filed March 22, 2005.

Telephone inquiries should be directed to the undersigned at (571) 272-3218.

The application is being forwarded to Technology Center AU 2913 for processing of the CPA and for consideration of the concurrently filed Information Disclosure Statement.

Frances Hicks

Frances Hicks
Petitions Examiner
Office of Petitions
Office of the Deputy Commissioner
for Patent Examination Policy

UNITED STATES PATENT AND TRADEMARK OFFICE

Commissioner for Patents
United States Patent and Trademark Office
P.O. Box 1450
Alexandria, VA 22313-1450
www.uspto.gov

BANNER & WITCOFF
1001 G STREET N W
SUITE 1100
WASHINGTON, DC 20001

COPY MAILED

MAR 2 3 2005

OFFICE OF PETITIONS

In re Application of	:	
Scott H. Wilson	:	
Application No. 29/204,617	:	ON PETITION
Filed: May 3, 2004	:	
Attorney Docket No. 015127.00327	:	

This is a decision on the petition, filed March 22, 2005, under 37 CFR 1.313(c)(3) to withdraw the above-identified application from issue after payment of the issue fee.

The petition is **GRANTED**.

The above-identified application is hereby withdrawn from issue in favor of a continued prosecution application (CPA) under 37 CFR 1.53(d).

Petitioner is advised that the issue fee paid on December 22, 2004 in the parent application is not refundable nor can it be applied towards any new Notice of Allowance which may issue on the CPA filed March 22, 2004.

Telephone inquiries should be directed to the undersigned at (571) 272-3220.

This matter is being referred Technology Center AU 2913 for processing of the CPA.

Wan Laymon
Petitions Examiner
Office of Petitions
Office of the Deputy Commissioner
for Patent Examination Policy

UNITED STATES PATENT AND TRADEMARK OFFICE

Commissioner for Patents
United States Patent and Trademark Office
P.O. Box 1450
Alexandria, VA 22313-1450
www.uspto.gov

LLOYD G. FARR
NELSON MULLINS RILEY & SCARBOROUGH
P.O. BOX 11070
COLUMBIA SC 29211

COPY MAILED

DEC 20 2004

OFFICE OF PETITIONS

ON PETITION

In re Application of :
Bruce Dexter et al :
Application No. 29/204,647 :
Filed: May 3, 2004 :
Attorney Docket No. 17745/09052-CON :

This is a decision on the "Petition to Correct a Priority Claim," filed December 6, 2004.

The petition is **dismissed** as **moot**.

Petitioner requests decision of a priority claim to design Application No. 29/175,706 which was inadvertently listed on the cover sheet filed with the instant application.

Petitioner's attention is directed to MPEP 201.11, which states:

> If the amendment or ADS to delete a benefit claim is submitted after the application has been allowed, the amendment or ADS will be treated under 37 CFR 1.312 (see MPEP § 714.16).

In view of the above, the filing of a petition is unnecessary and is dismissed as involving a moot issue.

The file does not indicate a change of address has been submitted, although the address given on the petition differs from the address of record. If appropriate, a change of address should be filed in accordance with MPEP 601.03. A courtesy copy of this decision is being mailed to the address given on the petition; however, the Office will mail all future correspondence solely to the address of record.

Inquiries related to this communication should be directed to the undersigned at (571) 272-3208.

This matter is being referred to Technology Center AU 2912 for treatment of the request to delete a priority claim to design Application No. 29/175,706.

Karen Creasy

Karen Creasy
Petitions Examiner
Office of Petitions
Office of the Deputy Commissioner
for Patent Examination Policy

cc:

LLOYD G. FARR
NELSON MULLINS RILEY & SCARBOROUGH
1320 MAIN STREET
COLUMBIA, SC 29201

UNITED STATES PATENT AND TRADEMARK OFFICE

UNITED STATES DEPARTMENT OF COMMERCE
United States Patent and Trademark Office
Address: COMMISSIONER FOR PATENTS
P.O. Box 1450
Alexandria, Virginia 22313-1450
www.uspto.gov

APPL NO.	FILING OR 371 (c) DATE	ART UNIT	FIL FEE REC'D	ATTY.DOCKET NO	DRAWINGS	TOT CLMS	IND CLMS
29/204,659	04/29/2004	2911	340	54317-036900	9	1	1

CONFIRMATION NO. 3107

CORRECTED FILING RECEIPT

OC000000013263025

Greenberg Traurig, LLP
Suite 400
2450 Colorado Avenue
Santa Monica, CA 90404

Date Mailed: 07/16/2004

Receipt is acknowledged of this regular Patent Application. It will be considered in its order and you will be notified as to the results of the examination. Be sure to provide the U.S. APPLICATION NUMBER, FILING DATE, NAME OF APPLICANT, and TITLE OF INVENTION when inquiring about this application. Fees transmitted by check or draft are subject to collection. Please verify the accuracy of the data presented on this receipt. **If an error is noted on this Filing Receipt, please write to the Office of Initial Patent Examination's Filing Receipt Corrections, facsimile number 703-746-9195. Please provide a copy of this Filing Receipt with the changes noted thereon. If you received a "Notice to File Missing Parts" for this application, please submit any corrections to this Filing Receipt with your reply to the Notice. When the USPTO processes the reply to the Notice, the USPTO will generate another Filing Receipt incorporating the requested corrections (if appropriate).**

Applicant(s)

Po Yi Ng, Residence Not Provided;
Chris Heatherly, Residence Not Provided;

Domestic Priority data as claimed by applicant

Foreign Applications

If Required, Foreign Filing License Granted: 06/17/2004

Projected Publication Date: None, application is not eligible for pre-grant publication

Non-Publication Request: No

Early Publication Request: No

Title

Button configuration

Preliminary Class

D14

LICENSE FOR FOREIGN FILING UNDER
Title 35, United States Code, Section 184
Title 37, Code of Federal Regulations, 5.11 & 5.15

GRANTED

The applicant has been granted a license under 35 U.S.C. 184, if the phrase "IF REQUIRED, FOREIGN FILING LICENSE GRANTED" followed by a date appears on this form. Such licenses are issued in all applications where the conditions for issuance of a license have been met, regardless of whether or not a license may be required as set forth in 37 CFR 5.15. The scope and limitations of this license are set forth in 37 CFR 5.15(a) unless an earlier license has been issued under 37 CFR 5.15(b). The license is subject to revocation upon written notification. The date indicated is the effective date of the license, unless an earlier license of similar scope has been granted under 37 CFR 5.13 or 5.14.

This license is to be retained by the licensee and may be used at any time on or after the effective date thereof unless it is revoked. This license is automatically transferred to any related applications(s) filed under 37 CFR 1.53(d). This license is not retroactive.

The grant of a license does not in any way lessen the responsibility of a licensee for the security of the subject matter as imposed by any Government contract or the provisions of existing laws relating to espionage and the national security or the export of technical data. Licensees should apprise themselves of current regulations especially with respect to certain countries, of other agencies, particularly the Office of Defense Trade Controls, Department of State (with respect to Arms, Munitions and Implements of War (22 CFR 121-128)); the Office of Export Administration, Department of Commerce (15 CFR 370.10 (j)); the Office of Foreign Assets Control, Department of Treasury (31 CFR Parts 500+) and the Department of Energy.

NOT GRANTED

No license under 35 U.S.C. 184 has been granted at this time, if the phrase "IF REQUIRED, FOREIGN FILING LICENSE GRANTED" DOES NOT appear on this form. Applicant may still petition for a license under 37 CFR 5.12, if a license is desired before the expiration of 6 months from the filing date of the application. If 6 months has lapsed from the filing date of this application and the licensee has not received any indication of a secrecy order under 35 U.S.C. 181, the licensee may foreign file the application pursuant to 37 CFR 5.15(b).

SPE RESPONSE FOR CERTIFICATE OF CORRECTION

Paper No.: _____

DATE : April 6, 2009

TO SPE OF : ART UNIT 2912
SUBJECT : Request for Certificate of Correction for Appl. No.: 29/204660 /D523305

Please respond to this request for a certificate of correction within 7 days.

FOR IFW FILES:

Please review the requested changes/corrections as shown in the **COCIN** document(s) in the IFW application image. No new matter should be introduced, nor should the scope or meaning of the claims be changed.

Please complete the response (see below) and forward the completed response to scanning using document code **COCX**.

FOR PAPER FILES:

Please review the requested changes/corrections as shown in the attached certificate of correction. Please complete this form (see below) and forward it with the file to:

Certificates of Correction Branch (CofC)
South Tower - 9A22
Palm Location 7580

Magdalene Talley
Certificates of Correction Branch
703-308-9390 ext. 120

Thank You For Your Assistance

The request for issuing the above-identified correction(s) is hereby:
Note your decision on the appropriate box.

- [X] **Approved** — **All** changes apply.
- [ ] **Approved in Part** — Specify below which changes **do not** apply.
- [ ] **Denied** — State the reasons for denial below.

Comments: _____

SPE

2915
Art Unit

PTOL-306 (REV. 7/03)

U.S. DEPARTMENT OF COMMERCE Patent and Trademark Office
ROBERT M. SPEAR
DESIGN PRACTICE SPECIALIST

UNITED STATES PATENT AND TRADEMARK OFFICE

Commissioner for Patents
United States Patent and Trademark Office
P.O. Box 1450
Alexandria, VA 22313-1450
www.uspto.gov

wk

Mailed: 10/23/06

In re application of	:	
Levesy	:	DECISION ON
Serial No. 29/204,801	:	PETITION
Filed: May 4, 2004	:	
For: Removable Shoe Ornament Set	:	

This is a response to applicants request TO WITHDRAW NOTICE OF ABANDONMENT, filed May 19, 2006. The petition requests that the abandonment, as set forth in the Notice of Abandonment mailed April 7, 2006 be withdrawn. A review of the file shows that applicant's address was not properly entered into the file.

DECISION

The instant request is accepted as a timely petition under 37 C.F.R. 1.181 (no fee).
The Petition is **GRANTED**.

The abandonment is withdrawn, the address will be corrected in the file and new notice of allowance will be sent.

Jacqueline Stone, Director
Technology Center 2900
Designs

Angelese Levesy
6205 Sprinkle Dr. N
Jacksonville, FL 32211-4735

OIPE IAP43
JAN 23 2006
PATENT & TRADEMARK OFFICE

PATENT APPLICATION

IN THE UNITED STATES PATENT AND TRADEMARK OFFICE

In re application of

Charles A. McCARTHY, III

Appln. No.: 29/204,886 Group Art Unit: 2911

Confirmation No.: 8564 Examiner: Heflin, Clare E.

Filed: May 5, 2004

For: SCONCE-TYPE LIGHTING FIXTURE

PETITION TO MAKE SPECIAL UNDER 37 C.F.R. § 1.102

Commissioner for Patents
P.O. Box 1450
Alexandria, VA 22313

Sir:

Pursuant to 37 C.F.R. § 1.102, Applicants hereby petition to make the application special.

A Statement regarding actual infringement is attached.

Please debit Deposit Account No. 10-0270 for the statutory fee of $130.00, under 37 C.F.R. § 1.17(i). Please charge any additional fees, except the issue fee, necessary to keep this application pending in the Patent and Trademark Office or credit any overpayment to Deposit Account No. 10-0270. A duplicate copy of this sheet is enclosed.

Respectfully submitted,

01/24/2006 SDENBOB1 00000003 100270 29204886
01 FC:1464 130.00 DA

Jansson, Shupe, Munger & Antaramian, Ltd.
245 Main Street
Racine, WI 53403
Telephone: (262) 632-6900
Facsimile: (262) 632-2257

John W. Bain
Registration No. 42,283

Attorney Docket No. KM-104US

Date: January 19, 2006

CERTIFICATE OF MAILING
I hereby certify that this correspondence is being deposited with the United States Postal Service as first class mail, with sufficient postage, in an envelope addressed to: MAIL STOP Petition
COMMISSIONER FOR PATENTS, ALEXANDRIA, VA 22313-1450 o
January 19, 2006
Teresa Zurawski Jan. 19, 2006
Name Teresa Zurawski Date

PETITION GRANTED

William Krynski,
Special Program Examiner
Technology Center 1700

FEB 9 2006

UNITED STATES PATENT AND TRADEMARK OFFICE

Commissioner for Patents
United States Patent and Trademark Office
P.O. Box 1450
Alexandria, VA 22313-1450
www.uspto.gov

JANSSON SHUPE & MUNGER LTD.
245 MAIN STREET
RACINE WI 53403

MAILED

OCT 23 2009

OFFICE OF PETITIONS

In re Application of	:	
Charles A. McCarthy III	:	
Application No. 29/204886	:	DECISION
Filing or 371(c) Date: 05/05/2004	:	ON PETITION
Patent No.: D526082	:	
Issue Date: 08/01/2006	:	
Attorney Docket Number:	:	
KM-104US	:	

This is a decision on the "Petition for Reprinting of Patent," filed February 8, 2008, to correct the name of the assignee on the front page of the above-identified patent. Petitioner does not cite to any laws, rules of MPEP section in support of the present petition. The petition is properly treated under 37 CFR 1.182.

The Petition is **dismissed**.

The patent issued in the name of assignee Kendall Manufacturing Company. A certificate of request for Certificate of Correction was filed August 21, 2006, requesting correction of the name of the assignee from Kendall to Kenall. Office records reveal that the request for Certificate of Correction was granted and the Office issued a Certificate of Correction on November 7, 2006.

Petitioner files the present petition and requests reprinting of the patent to delete the words Kendall Manufacturing Company and replace them with Kenall Manufacturing Company. (Emphasis supplied).

Applicable Law, Rules and MPEP

The applicable law, 35 U.S.C. 254, Certificate of correction of Patent and Trademark Office Mistake, provides:

Whenever a mistake in a patent, incurred through the fault of the Patent and Trademark Office, is clearly disclosed by the records of the Office, the Director may issue a certificate of correction stating the fact and nature of such mistake, under seal, without charge, to be recorded in the records of patents. A printed copy thereof shall be attached to each printed copy of the patent, and such certificate shall be considered as part of the

> original patent. Every such patent, together with such certificate, shall have the same effect and operation in law on the trial of actions for causes thereafter arising as if the same had been originally issued in such corrected form. The Director may issue a corrected patent without charge in lieu of and with like effect as a certificate of correction.

The applicable Rule, 37 CFR 3.81(b) states:

> After payment of the issue fee : Any request for issuance of an application in the name of the assignee submitted after the date of payment of the issue fee, and any request for a patent to be corrected to state the name of the assignee, must state that the assignment was submitted for recordation as set forth in § 3.11 before issuance of the patent, and must include a request for a certificate of correction under § 1.323 of this chapter (accompanied by the fee set forth in § 1.20(a)) and the processing fee set forth in § 1.17 (i) of this chapter.

The MPEP 1481.01, Correction of Assignees' Names, states:

> The Fee(s) Transmittal Form portion (PTOL-85B) of the Notice of Allowance provides a space (item 3) for assignment data which should be completed in order to comply with 37 CFR 3.81. Unless an assignee's name and address are identified in the appropriate space for specifying the assignee, (i.e., item 3 of the Fee(s) Transmittal Form PTOL-85B), the patent will issue to the applicant. Assignment data printed on the patent will be based solely on the information so supplied.
> Any request for the issuance of an application in the name of the assignee submitted after the date of payment of the issue fee, and any request for a patent to be corrected to state the name of the assignee must:
> (A) state that the assignment was submitted for recordation as set forth in 37 CFR 3.11 before issuance of the patent;
> (B) include a request for a certificate of correction under 37 CFR 1.323 along with the fee set forth in 37 CFR 1.20(a); and
> (C) include the processing fee set forth in 37 CFR 1.17(i).
> See 37 CFR 3.81(b).<

Analysis/conclusion

Applicant is reminded that a standard principle of statutory construction is: expressio unius est exclusion alterius (the mention of one thing implies exclusion of another thing), namely, absent legislative intent to the contrary, when a statute expressly provides a specific remedy for a specific situation, the statute is deemed to exclude other remedies for such situation. See, National R.R. Passenger Corp. v. National Ass'n of R.R. Passengers, 414 U.S. 453, 458 (1974); see, also, Botany Worsted Mills v. United States, 278 U.S. 282, 289 (1929) ("when a statute limits a thing to be done in a particular mode, it includes the negative of any other mode"). That is, the patent statute, 35 U.S.C.§ 254 (and its promulgating regulation 37 CFR 3.81(b)), provides

a specific mechanism whereby an applicant may petition the USPTO to correct the name of the assignee appearing on the patent.

In this instance, Office rules provide a mechanism for correcting the name of the assignee after payment of the issue fee. Petitioner herein filed a request for Certificate of Correction on August 21, 2006, requesting correction of the name of the assignee from Kendall to Kenall. Office records reveal that the request for Certificate of Correction was granted and the Office issued a Certificate of Correction on November 7, 2006.

Since there is a specific mechanism in place to remedy the requested relief, then it is inappropriate for the USPTO to contemplate circumventing that mechanism by creating another remedy. Moreover, the requested relief, correction of the name of the assignee, was granted pursuant to the applicable law, rule, and MPEP, when the Office issued a Certificate of Correction on November 7, 2006. The petition is, therefore, dismissed.

Telephone inquiries concerning this matter should be directed to the undersigned at (571) 272-3232. Any questions concerning the issuance of the Certificate of Correction should be directed to the Certificate of Correction Branch at (571) 272-4200.

/Derek L. Woods/
Derek L. Woods
Attorney
Office of Petitions

UNITED STATES PATENT AND TRADEMARK OFFICE

Commissioner for Patents
United States Patent and Trademark Office
P.O. Box 1450
Alexandria, VA 22313-1450
www.uspto.gov

JUN 29 2004

JONATHAN D. FEUCHTWANG
150 NORTH WACKER DRIVE
SUITE 1200
CHICAGO IL 60606

In re Application of	:	
Richard Agemura	:	
Serial No.: 29/204,896	:	DECISION ON PETITION
Filed: May 6, 2004	:	
For: Military Service Headstone Medallion	:	

This is in response to applicants' petition filed May 6, 2004, to make the above-identified application special under the provisions of 37 CFR 1.102(c), based on the age of the applicant.

Applicant has satisfied the provisions set forth in M.P.E.P. 708.02, IV. Therefore the petition is **GRANTED**.

The application will be forwarded to the examiner for action on the merits commensurate with this decision.

Should there be any questions with regard to this letter please contact John Kittle by letter addressed to the Director, Technology Center 3700/2900, Washington, DC 20231, or by telephone at (703) 308-0873 or by facsimile transmission at (703) 308-3139.

John E. Kittle

John E. Kittle
Director,
Technology Center 3700/2900

UNITED STATES PATENT AND TRADEMARK OFFICE

Commissioner for Patents
United States Patent and Trademark Office
P.O. Box 1450
Alexandria, VA 22313-1450
www.uspto.gov

JUN 07 2004

JONATHAN D. FEUCHTWANG
150 NORTH WACKER DRIVE
SUITE 1200
CHICAGO IL 60606

In re Application of	:	
Richard Agemura	:	DECISION PETITION
Serial No.: 29/204,897	:	
Filed: May 6, 2004	:	
For: Military Service Headstone Medallion	:	

This is in response to applicants' petition filed May 6, 2004, to make the above-identified application special under the provisions of 37 CFR 1.102(c), based on the age of the applicant.

Applicant has satisfied the provisions set forth in M.P.E.P. 708.02, IV. Therefore the petition is **GRANTED**.

The application will be forwarded to the examiner for action on the merits commensurate with this decision.

Should there be any questions with regard to this letter please contact John Kittle by letter addressed to the Director, Technology Center 3700/2900, P.O. Box 1450 Alexandria, VA 22313-1450, or by telephone at (703) 308-0873 or by facsimile transmission at (703) 308-3139.

John E. Kittle

John E. Kittle
Director,
Technology Center 3700/2900

UNITED STATES PATENT AND TRADEMARK OFFICE

Commissioner for Patents
United States Patent and Trademark Office
P.O. Box 1450
Alexandria, VA 22313-1450
www.uspto.gov

AUG 04 2004

JONATHAN D. FEUCHTWANG
150 NORTH WACKER DRIVE
SUITE 1200
CHICAGO IL 60606

In re Application of	:	
Richard Agemura	:	
Serial No.: 29/204,898	:	DECISION ON PETITION
Filed: May 6, 2004	:	
For: Military Service Headstone Medallion	:	

This is in response to applicants' petition filed May 6, 2004, to make the above-identified application special under the provisions of 37 CFR 1.102(c), based on the age of the applicant.

Applicant has satisfied the provisions set forth in M.P.E.P. 708.02, IV. Therefore the petition is **GRANTED.**

The application will be forwarded to the examiner for action on the merits commensurate with this decision..

Should there be any questions with regard to this letter please contact John Kittle by letter addressed to the Director, Technology Center 3700/2900, P.O. Box 1450 Alexandria, VA 22313-1450, or by telephone at (703) 308-0873 or by facsimile transmission at (703) 308-3139.

John E. Kittle
Director
Technology Center 3700/2900

UNITED STATES PATENT AND TRADEMARK OFFICE

COMMISSIONER FOR PATENTS
UNITED STATES PATENT AND TRADEMARK OFFICE
P.O. BOX 1450
ALEXANDRIA, VA 22313-1450
www.uspto.gov

COPY MAILED
JUL 17 2006
OFFICE OF PETITIONS

FULWIDER PATTON LEE & UTECHT, LLP
200 OCEANGATE, SUITE 1550
LONG BEACH CA 90802

In re Application of :
Berman : DECISION ON PETITION
Application No. 29/204,919 :
Filed: May 5, 2004 :
Docket No.: SADDB.68532 :

This is a decision on the petition under 37 CFR 1.181, filed June 13, 2006.

This application became abandoned July 1, 2005 for failure to timely submit a proper reply to the Office communication mailed March 31, 2005. Notice of Abandonment was mailed May 25, 2006.

Petitioner asserts non-receipt of the Office communication mailed May 31, 2005.

In the absence of any irregularity in the mailing of the Office communication, there is a strong presumption that the Office communication was properly mailed to practitioner at the address of record. This presumption may be overcome by a showing that the Notice was not in fact received. The showing required to establish non-receipt of an Office communication must include a statement from the practitioner stating that the Office communication was not received by the practitioner and attesting to the fact that a search of the file jacket and docket records indicates that the Office communication was not received. A copy of the docket record where the non-received Office communication would have been entered had it been received and docketed must be attached to and referenced in practitioner's statement. *See*, MPEP 711.03(c). The showing outlined above may not be sufficient if there are circumstances that point to a conclusion that the Office communication may have been lost after receipt rather than a conclusion that the Office communication was lost in the mail.

The copy of the docketing records submitted herewith fail to cover the time period where the non-received Office communication would have been entered had it been received.

In view thereof, the petition is hereby **DISMISSED**.

Any request for reconsideration of this decision must be submitted within **TWO (2) MONTHS** from mail date of this decision.

Extensions of time under 37 CFR 1.136(a) are permitted. The reconsideration request should include a cover letter entitled "Renewed Petition under 37 CFR 1.181." This is not a final agency decision.

Further correspondence with respect to this matter should be addressed as follows:

By mail: **Mail Stop Petition**
Commissioner for Patents
P.O. Box 1450
Alexandria, VA 22313-1450

By facsimile: (571) 272-8300

By hand: U.S. Patent and Trademark Office
Customer Service Window
Mail Stop Petition
Randolph Building
401 Dulany Street
Alexandria, VA 22314

Telephone inquiries concerning this matter may be directed to the undersigned at (571) 272-3205.

Alesia M. Brown
Petitions Attorney
Office of Petitions

UNITED STATES PATENT AND TRADEMARK OFFICE

COMMISSIONER FOR PATENTS
UNITED STATES PATENT AND TRADEMARK OFFICE
P.O. BOX 1450
ALEXANDRIA, VA 22313-1450
www.uspto.gov

COPY MAILED
DEC 0 4 2006
OFFICE OF PETITIONS

FULWIDER PATTON LEE & UTECHT, LLP
200 OCEANGATE, SUITE 1550
LONG BEACH CA 90802

In re Application of :
Berman : DECISION ON PETITION
Application No. 29/204,919 :
Filed: May 5, 2004 :
Docket No.: SADDB.68532 :

This is a decision on the renewed petition to withdraw the holding of abandonment under 37 CFR 1.181, filed September 5, 2006.

This application was held abandoned July 1, 2005 for failure to timely submit a proper reply to the Office communication mailed March 31, 2005. Notice of Abandonment was mailed May 25, 2006. A petition under 37 CFR 1.181 was filed June 13, 2006 and dismissed June 17, 2006.

Petitioner continues asserts non-receipt of the Office communication mailed May 31, 2005.

In the absence of any irregularity in the mailing of the Office communication, there is a strong presumption that the Office communication was properly mailed to practitioner at the address of record. This presumption may be overcome by a showing that the Notice was not in fact received. The showing required to establish non-receipt of an Office communication must include a statement from the practitioner stating that the Office communication was not received by the practitioner and attesting to the fact that a search of the file jacket and docket records indicates that the Office communication was not received. A copy of the docket record where the non-received Office communication would have been entered had it been received and docketed must be attached to and referenced in practitioner's statement. *See*, MPEP 711.03(c). The showing outlined above may not be sufficient if there are circumstances that point to a conclusion that the Office communication may have been lost after receipt rather than a conclusion that the Office communication was lost in the mail.

The arguments and supporting documentation presented have been carefully considered and support the conclusion that the non-final Office was not received.
In view thereof he Notice of Abandonment is hereby **VACATED** and the holding of abandonment is **WITHDRAWN**.

The application file is being forwarded to Technology Center 2900 for re-mailing of the Office communication. The time period for reply will be set in the re-mailed Office communication.

Telephone inquiries concerning this matter may be directed to the undersigned at (571) 272-3205.

Alesia M. Brown
Petitions Attorney
Office of Petitions

UNITED STATES PATENT AND TRADEMARK OFFICE

Commissioner for Patents
United States Patent and Trademark Office
P.O. Box 1450
Alexandria, VA 22313-1450
www.uspto.gov

COPY MAILED

SEP 1 0 2004

OFFICE OF PETITIONS

OLIFF & BERRIDGE, PLC
P.O. BOX 19928
ALEXANDRIA, VA 22320

In re Application of :
Mitsuharu Hattori :
Application No. 29/204,955 : DECISION GRANTING PETITION
Filed: May 7, 2004 :
Attorney Docket No. 119384 :

This is a decision on the petition filed July 9, 2004, requesting that the above-identified application be accorded a filing date of May 7, 2004.

On May 7, 2004, the above-identified application was filed. On June 22, 2004, the Office of Initial Patent Examination mailed a "Notice of Incomplete Application" (the "Notice"), stating that the application had not been accorded a filing date because no specification, including a claim, was found with the application papers. The Notice allowed a non-extendable two-month period for reply to the requirement to file the omitted item beginning from the mailing date of the Notice. The Notice also required an executed oath or declaration to be filed.

In response, on July 9, 2004, applicants filed the present petition, a copy of the specification, including one claim, and a postcard receipt date-stamped by the Office acknowledging receipt of one page of specification, among other items on May 7, 2004.

Upon review of the record, the specification was not located among the application papers. The evidence is convincing that the application papers deposited May 7, 2004, included a specification that included at least one claim. Therefore, the application, including the specification, and claim, was complete on filing and entitled to the presently accorded filing date of May 7, 2004.

Accordingly, the petition is granted.

The application file is being returned to the Office of Initial Patent Examination for further processing with a filing date of May 7, 2004. Deposit account 15-0461 will be refunded $130.00 that was remitted for the instant petition fee.

Any inquiries related to this decision should be directed to the undersigned at (703) 305-0010.

Kenya A. McLaughlin

Kenya A. McLaughlin
Petitions Attorney
Office of Petitions

UNITED STATES PATENT AND TRADEMARK OFFICE

Commissioner for Patents
United States Patent and Trademark Office
P.O. Box 1450
Alexandria, VA 22313-1450
www.uspto.gov

Michael E. McKee
Attorney at Law
804 Swaps Lane
Knoxville TN 37923

COPY MAILED

SEP 2 0 2004

OFFICE OF PETITIONS

In re Application of :
Paul Griffin :
Application No. 29/205,147 : ON PETITION
Filed: May 10, 2004 :
Attorney Docket No.: 200-014 :

This is a decision on the petition filed August 10, 2004, requesting in effect, that a Notice of Omitted Parts in a Nonprovisional Application[1] ("Notice") mailed August 3, 2004 be withdrawn.

The application was filed on May 10, 2004. However, on August 3, 2004, the Office of Initial Patent Examination (OIPE) mailed a Notice stating that the application had been accorded a filing date of May 10, 2004 but figures 4 and 5 described in the specification appeared to have been omitted.

In response, the present petition was filed wherein Petitioner contends 3 sheets of drawings which included figures 4 and 5 as described in the specification were filed on May 10, 2004. In support, the petition is accompanied by a copy of applicant's return postcard which lists 3 sheets of drawings. The petition is further accompanied by 1 sheet of drawings including figures 4 and 5.

Applicant's postcard receipt is prima facie evidence that 3 sheets of drawings were received on May 10, 2004, but figures 4 and 5 are not present in the file. Hence, it is clear that the papers for this application were mishandled by the Office. Therefore, it is concluded that 3 sheets of drawings including figures 4 and 5 of the specification were received on May 10, 2004, as shown in counsel's file, and later misplaced in the office.

The petition is Granted. The petition fee of $130.00 will be

[1]The above-identified application is a design application.

refunded via a treasury check.

Since figures 4 and 5 as described in the specification cannot be located in the Office, figures 4 and 5 supplied on August 10, 2004, will be used for processing and examination purposes.

The application will be returned to the Office of Initial Patent Examination for further processing with a filing date of May 10, 2004, using substitute page 3 that contains figures 4 and 5 supplied on August 10, 2004.

Telephone inquiries related to this decision may be directed to the undersigned at (703) 306-0251.

Charlema R. Grant
Petitions Attorney
Office of Petitions

SPE RESPONSE FOR CERTIFICATE OF CORRECTION

Paper No.:106

DATE : January 3, 2006

TO SPE OF : ART UNIT

SUBJECT : Request for Certificate of Correction on Patent No.:

A response is requested with respect to the accompanying request for a certificate of correction.

Please complete this form and return with file, within **7** days to:
Certificates of Correction Branch - PK 3-910
Palm location **7590** - Tel. No. 305-8201

With respect to the change(s) requested, correcting Office and/or Applicant's errors, should the patent read as shown in the certificate of correction? No new matter should be introduced, nor should the scope or meaning of the claims be changed.

Thank You For Your Assistance **Certificates of Correction Branch**

The request for issuing the above-identified correction(s) is hereby:
Note your decision on the appropriate box.

☒ **Approved** **All** changes apply.

☐ **Approved in Part** Specify below which changes **do not** apply.

☐ **Denied** State the reasons for denial below.

Comments:

change of inventorship

SPE: gary watson **Art Unit** 2915

UNITED STATES PATENT AND TRADEMARK OFFICE

Commissioner for Patents
United States Patent and Trademark Office
P.O. Box 1450
Alexandria, VA 22313-1450
www.uspto.gov

BANNER & WITCOFF, LTD.
28 STATE STREET
28th FLOOR
BOSTON, MA 02109-9601

COPY MAILED
DEC 29 2006
OFFICE OF PETITIONS

In re Application of :
Hyde, et al. :
Application No. 29/205,165 :
Filed: May 10, 2004 :
Attorney Docket No. 004844-00026

ON PETITION

This is a decision on the petition under 37 CFR 1.181 filed on September 25, 2006, and in duplicated on October 11, 2006,to withdraw the holding of abandonment.

The petition is **DISMISSED**.

The application became abandoned on October 12, 2005, after no response was received to the non-final Office action mailed July 12, 2005, which set a statutory period for reply of three-months from its mailing date. A response was filed on October 12, 2005, which the Technology Center determined to be inadequate. No further responses were received within the allowable period, and the application became abandoned on October 12, 2005. A Notice of Abandonment was mailed on September 21, 2006.

In the instant petition, petitioner states that no notice of inadequacy of the October 12, 2005, was ever issued by the Technology Center. To the contrary, petitioner states that Examiner John Windmuller stated on September 15, 2006, that the application would be allowed if replacement drawings were filed that bore an indication on each sheet that they were replacement sheets. Petitioner states that the replacement drawings were filed on September 15, 2006, and the record reflects the same.

It is noted that a petition to withdraw the holding of abandonment is only proper when there is some disagreement as to sufficiency of the reply filed, the controlling dates, or whether a reply was filed at all. See MPEP 711.03(c). It does not appear that petitioner disagrees with the fact that the response filed October 12, 2005, was not a *bona fide* response. A review of the application file reveals that the response of October 12, 2005, was deemed inadequate because the replacements drawing sheets filed did not indicate that they were replacement drawing sheets as required by 37 CFR 1.121. The record does not reflect that a proper response to the non-final Office action was filed within statutory period. In order to have the holding of abandonment withdrawn, petitioner must demonstrate that a *bona fide* reply was filed prior to the expiration of the shortened statutory period. The instant petition does not prove this. The petition is dismissed, accordingly.

Alternatively, petitioner may revive the application based on unintentional abandonment under 37 CFR 1.137(b). A grantable petition pursuant to 37 CFR 1.137(b) must be accompanied by the required reply, the required petition fee ($1500.00 for a large entity and $750.00 for a verified small entity), and a statement that the **entire** delay in filing the required reply from the due date for the reply until the filing of a grantable petition pursuant to 37 CFR 1.137(b) was unintentional.

Further correspondence with respect to this matter should be addressed as follows:

By mail: Commissioner for Patents
United States Patent and Trademark Office
Box 1450
Alexandria, VA 22313-1450

By facsimile: (571) 273-8300
Attn: Office of Petitions

Telephone inquiries concerning this decision should be directed to the undersigned (571) 272-3222.

Kenya A. McLaughlin
Petitions Attorney
Office of Petitions

UNITED STATES PATENT AND TRADEMARK OFFICE

Commissioner for Patents
United States Patent and Trademark Office
P.O. Box 1450
Alexandria, VA 22313-1450
www.uspto.gov

BANNER & WITCOFF, LTD.
28 STATE STREET
28th FLOOR
BOSTON, MA 02109-9601

COPY MAILED

MAR 2 8 2007

OFFICE OF PETITIONS

In re Application of

Hyde, et al.

Application No. 29/205,165

Filing Date: May 10, 2004

Attorney Docket No. 004844-00026

This is a decision on the petition under 37 CFR §1.137(b), filed January 4, 2007, in the above-identified application.

The petition is **dismissed**.

Any request for reconsideration of this decision must be submitted within TWO (2) MONTHS from the mail date of this decision. Extensions of time under 37 CFR 1.136(a) are permitted. The reconsideration request should include a cover letter entitled "Renewed Petition" under 37 CFR 1.137(b)."

The application became abandoned on October 12, 2005, after no response was received to the non-final Office action mailed July 12, 2005, which set a statutory period for reply of three-months from its mailing date. A response was filed on October 12, 2005, which the Technology Center determined to be inadequate. No further responses were received within the allowable period, and the application became abandoned on October 12, 2005. A Notice of Abandonment was mailed on September 21, 2006.

Effective December 1, 1997, the provisions of 37 CFR 1.137(b) now provide that where the delay in reply was unintentional, a petition may be filed to revive an abandoned application or a lapsed patent pursuant to 37 CFR 1.137(b). A grantable petition pursuant to 37 CFR 1.137(b) must be accompanied by:

(1) the required reply, unless previously filed. In a non-provisional application abandoned for failure to prosecute, the required reply may be met by the filing of a continuing application. In an application or patent, abandoned or lapsed for failure to pay the issue fee, or any portion thereof, the required reply must be the payment of the issue fee or any outstanding balance thereof.

(2) the petition fee as set forth in 37 CFR 1.17(m);

(3) a statement that the entire delay in filing the required reply from the due date for the reply until the filing of a grantable petition pursuant to 37 CFR 1.137(b) was unintentional. The Commissioner may require additional information where there is a question whether the delay was unintentional; and

(4) any terminal disclaimer (and fee set forth in 37 CFR 1.20(d)) required pursuant to 37 CFR 1.137(d).

The instant petition does not satisfy the requirements of item (4) above.

As to item (4), the terminal disclaimer was not found with the petition papers. The subject application is a design application, therefore; a terminal disclaimer is required in order to revive the application. Any renewed petition filed must be accompanied by the completed terminal disclaimer form, which is enclosed for petitioner's convenience. Pursuant to 37 CFR 1.137(d), the terminal disclaimer must dedicate to the public a terminal part of the term of any patent granted from this application that is equivalent to the period of abandonment of the application.

Further correspondence with respect to this matter should be addressed as follows:

By mail: Mail Stop Petitions
Commissioner for Patents
United States Patent and Trademark Office
Box 1450
Alexandria, VA 22313-1450

By facsimile: (571) 273-8300

Telephone inquiries concerning this matter may be directed to the undersigned at (571) 272-3222.

Kenya A. McLaughlin
Petitions Attorney
Office of Petitions

Enclosure: "Terminal Disclaimer to Accompany Petition"

PTO/SB/63 (09-06)
Approved for use through 03/31/2007. OMB 0651-0031
U.S. Patent and Trademark Office; U.S. DEPARTMENT OF COMMERCE
Under the Paperwork Reduction Act of 1995, no persons are required to a collection of information unless it displays a valid OMB control number.

TERMINAL DISCLAIMER TO ACCOMPANY PETITION

Docket Number (Optional)

In re Application of:

Name:

Application Number:

Filed:

For:

The owner*, _____ of _____ percent interest in the above-identified application hereby disclaims a terminal part of the term of any patent granted the above-identified application equivalent to: (1) if the above-identified application is a design application, the period of abandonment of the above-identified application, and (2) if the above-identified application is a utility or plant application, the lesser of: (a) the period of abandonment of the application; or (b) the period extending beyond twenty years from the date on which the above-identified application was filed in the United States or, if the application contains a specific reference to an earlier filed application(s) under 35 U.S.C. 120, 121, or 365(c), from the date on which the earliest such application was filed. This disclaimer also applies to any patent granted on a utility or plant application filed before June 8, 1995, or a design application, that contains a specific reference under 35 U.S.C. 120, 121, or 365(c) to the above-identified application. This disclaimer is binding upon the grantee, and its successors or assigns.

Check either box 1 or 2 below, if appropriate.

1. ☐ For submissions on behalf of an organization (e.g., corporation, partnership, university, government agency, etc.), the undersigned is empowered to act on behalf of the organization.
2. ☐ The undersigned is an attorney or agent of record. Registration Number_____.

Signature	Date
Typed or Printed Name	Telephone Number

☐ Terminal disclaimer fee under 37 CFR 1.20(d) included.

WARNING: Information on this form may become public. Credit card information should not be included on this form. Provide credit card information and authorization on PTO-2038.

* Statement under 37 CFR 3.73(b) is required if terminal disclaimer is signed by the assignee (owner). Form PTO/SB/96 may be used for making this certification. See MPEP § 324.

This collection of information is required by 37 CFR 1.137. The information is required to obtain or retain a benefit by the public which is to file (and by the USPTO to process) an application. Confidentiality is governed by 35 U.S.C. 122 and 37 CFR 1.11 and 1.14. This collection is estimated to take 12 minutes to complete, including gathering, preparing, and submitting the completed application form to the USPTO. Time will vary depending upon the individual case. Any comments on the amount of time you require to complete this form and/or suggestions for reducing this burden, should be sent to the Chief Information Officer, U.S. Patent and Trademark Office, U.S. Department of Commerce, P.O. Box 1450, Alexandria, VA 22313-1450. DO NOT SEND FEES OR COMPLETED FORMS TO THIS ADDRESS. SEND TO: **Commissioner for Patents, P.O. Box 1450, Alexandria, VA 22313-1450.**

If you need assistance in completing the form, call 1-800-PTO-9199 and select option 2.

Privacy Act Statement

The **Privacy Act of 1974 (P.L. 93-579)** requires that you be given certain information in connection with your submission of the attached form related to a patent application or patent. Accordingly, pursuant to the requirements of the Act, please be advised that: (1) the general authority for the collection of this information is 35 U.S.C. 2(b)(2); (2) furnishing of the information solicited is voluntary; and (3) the principal purpose for which the information is used by the U.S. Patent and Trademark Office is to process and/or examine your submission related to a patent application or patent. If you do not furnish the requested information, the U.S. Patent and Trademark Office may not be able to process and/or examine your submission, which may result in termination of proceedings or abandonment of the application or expiration of the patent.

The information provided by you in this form will be subject to the following routine uses:

1. The information on this form will be treated confidentially to the extent allowed under the Freedom of Information Act (5 U.S.C. 552) and the Privacy Act (5 U.S.C 552a). Records from this system of records may be disclosed to the Department of Justice to determine whether disclosure of these records is required by the Freedom of Information Act.
2. A record from this system of records may be disclosed, as a routine use, in the course of presenting evidence to a court, magistrate, or administrative tribunal, including disclosures to opposing counsel in the course of settlement negotiations.
3. A record in this system of records may be disclosed, as a routine use, to a Member of Congress submitting a request involving an individual, to whom the record pertains, when the individual has requested assistance from the Member with respect to the subject matter of the record.
4. A record in this system of records may be disclosed, as a routine use, to a contractor of the Agency having need for the information in order to perform a contract. Recipients of information shall be required to comply with the requirements of the Privacy Act of 1974, as amended, pursuant to 5 U.S.C. 552a(m).
5. A record related to an International Application filed under the Patent Cooperation Treaty in this system of records may be disclosed, as a routine use, to the International Bureau of the World Intellectual Property Organization, pursuant to the Patent Cooperation Treaty.
6. A record in this system of records may be disclosed, as a routine use, to another federal agency for purposes of National Security review (35 U.S.C. 181) and for review pursuant to the Atomic Energy Act (42 U.S.C. 218(c)).
7. A record from this system of records may be disclosed, as a routine use, to the Administrator, General Services, or his/her designee, during an inspection of records conducted by GSA as part of that agency's responsibility to recommend improvements in records management practices and programs, under authority of 44 U.S.C. 2904 and 2906. Such disclosure shall be made in accordance with the GSA regulations governing inspection of records for this purpose, and any other relevant (*i.e.*, GSA or Commerce) directive. Such disclosure shall not be used to make determinations about individuals.
8. A record from this system of records may be disclosed, as a routine use, to the public after either publication of the application pursuant to 35 U.S.C. 122(b) or issuance of a patent pursuant to 35 U.S.C. 151. Further, a record may be disclosed, subject to the limitations of 37 CFR 1.14, as a routine use, to the public if the record was filed in an application which became abandoned or in which the proceedings were terminated and which application is referenced by either a published application, an application open to public inspection or an issued patent.
9. A record from this system of records may be disclosed, as a routine use, to a Federal, State, or local law enforcement agency, if the USPTO becomes aware of a violation or potential violation of law or regulation.

UNITED STATES PATENT AND TRADEMARK OFFICE

Commissioner for Patents
United States Patent and Trademark Office
P.O. Box 1450
Alexandria, VA 22313-1450
www.uspto.gov

BANNER & WITCOFF, LTD.
28 STATE STREET
28th FLOOR
BOSTON, MA 02109-9601

COPY MAILED

MAY 25 2007

OFFICE OF PETITIONS

In re Application of

Hyde, et al.

Application No. 29/205,165

Filed: May 10, 2004

Attorney Docket No. 004844-00026

DECISION ON PETITION

This is a decision on the renewed petition under 37 CFR 1.137(b), filed September 15, 2006, to revive the above-identified application.

The renewed petition is **GRANTED**.

The application became abandoned on October 12, 2005, after no response was received to the non-final Office action mailed July 12, 2005, which set a statutory period for reply of three-months from its mailing date. A response was filed on October 12, 2005, which the Technology Center determined to be inadequate. No further responses were received within the allowable period, and the application became abandoned on October 12, 2005. A Notice of Abandonment was mailed on September 21, 2006.

The drawings filed September 15, 2006, are noted.

The application is being forwarded to Technology Center 2900, GAU 2914 for further processing.

Telephone inquiries concerning this decision should be directed to the undersigned at (571) 272-3222.

Kenya A. McLaughlin
Petitions Attorney
Office of Petitions

UNITED STATES PATENT AND TRADEMARK OFFICE

Commissioner for Patents
United States Patent and Trademark Office
P.O. Box 1450
Alexandria, VA 22313-1450
www.uspto.gov

BANNER & WITCOFF, LTD.
28 STATE STREET
28th FLOOR
BOSTON, MA 02109-9601

COPY MAILED

MAY 25 2007

OFFICE OF PETITIONS

In re Application of

Hyde, et al. :

Application No. 29/205,165

: DECISION ON PETITION

Filed: May 10, 2004

:

Attorney Docket No. 004844-00026

This is a decision on the renewed petition under 37 CFR 1.137(b), filed April 6, 2007, to revive the above-identified application.

The renewed petition is **GRANTED**.

The above-cited application became abandoned for failure to file a proper reply in a timely manner to the non-final Office action mailed July 12, 2005, which set a shortened statutory period for reply of three (3) months from its mailing date. No extension of time pursuant to 37 CFR 1.136(a) was obtained within the allowable period. Accordingly, the application became abandoned on October 12, 2005. A Notice of Abandonment was mailed September 21, 2006.

The terminal disclaimer filed April 6, 2007, is noted.

The application is being forwarded to Technology Center 2900, GAU 2914 for further processing.

Telephone inquiries concerning this decision should be directed to the undersigned at (571) 272-3222.

Kenya A. McLaughlin
Petitions Attorney
Office of Petitions

UNITED STATES PATENT AND TRADEMARK OFFICE

Commissioner for Patents
United States Patent and Trademark Office
P.O. Box 1450
Alexandria, VA 22313-1450
www.uspto.gov

BANNER & WITCOFF, LTD.
28 STATE STREET
28th FLOOR
BOSTON, MA 02109-9601

COPY MAILED
MAY 25 2007
OFFICE OF PETITIONS

In re Application of

Hyde, et al. :

Application No. 29/205,165

: DECISION ON PETITION

Filed: May 10, 2004

:

Attorney Docket No. 004844-00026

This is a decision on the renewed petition under 37 CFR 1.137(b), filed April 6, 2007, to revive the above-identified application.

The renewed petition is **GRANTED**.

The above-cited application became abandoned for failure to file a proper reply in a timely manner to the non-final Office action mailed July 12, 2005, which set a shortened statutory period for reply of three (3) months from its mailing date. No extension of time pursuant to 37 CFR 1.136(a) was obtained within the allowable period. Accordingly, the application became abandoned on October 12, 2005. A Notice of Abandonment was mailed September 21, 2006.

The terminal disclaimer filed April 6, 2007, is noted.

The application is being forwarded to Technology Center 2900, GAU 2914 for further processing.

Telephone inquiries concerning this decision should be directed to the undersigned at (571) 272-3222.

Kenya A. McLaughlin
Petitions Attorney
Office of Petitions

UNITED STATES PATENT AND TRADEMARK OFFICE

Commissioner for Patents
United States Patent and Trademark Office
P.O. Box 1450
Alexandria, VA 22313-1450
www.uspto.gov

MEHRMAN LAW OFFICE PC
ONE PREMIER PLAZA
5605 GLENRIDGE DRIVE
SUITE 795
ATLANTA, GA 30342

COPY MAILED

JUL 27 2006

OFFICE OF PETITIONS

In re Application of	:	
Neil McCord et al	:	
Application No. 29/205,259	:	DECISION GRANTING PETITION
Filed: May 12, 2004	:	UNDER 37 CFR 1.137(b)
Attorney Docket No. 4S01.1-080	:	

This is a decision on the petition under 37 CFR 1.137(b), filed June 12, 2006, to revive the above-identified application.

The petition is **GRANTED**.

This application became abandoned for failure to timely file corrected drawings on or before March 30, 2006, as required by the Notice of Allowability mailed December 30, 2005. A Notice of Abandonment was mailed on July 20, 2006.

The petition satisfies the conditions for revival pursuant to the provisions of 37 CFR 1.137(b) in that (1) the reply in the form of drawings (note attached Notice of Draftsperson's Patent Drawing Review); (2) the $750 petition fee; (3) the required statement of unintentional delay; and (4) a terminal disclaimer as required by 37 CFR 1.137(d) have been received. Accordingly, the reply to the Notice of December 30, 2005 is accepted as having been unintentionally delayed.

The terminal disclaimer filed June 12, 2006 has been accepted and made of record.

Telephone inquiries concerning this decision should be directed to the undersigned at (571) 272-3218.

This matter is being referred to Publishing Division.

Frances Hicks
Petitions Examiner
Office of Petitions

Attachment: Notice of Draftsperson's Patent Drawing Review

UNITED STATES PATENT AND TRADEMARK OFFICE

Commissioner for Patents
United States Patent and Trademark Office
P.O. Box 1450
Alexandria, VA 22313-1450
www.uspto.gov

MEHRMAN LAW OFFICE PC
ONE PREMIER PLAZA
5605 GLENRIDGE DRIVE
SUITE 795
ATLANTA, GA 30342

COPY MAILED

JUL 27 2006

OFFICE OF PETITIONS

In re Application of	:
Neil McCord et al	:
Application No. 29/205,260	: DECISION GRANTING PETITION
Filed: May 12, 2004	: UNDER 37 CFR 1.137(b)
Attorney Docket No. 4S01.1-090	:

This is a decision on the petition under 37 CFR 1.137(b), filed June 12, 2006, to revive the above-identified application.

The petition is **GRANTED**.

This application became abandoned for failure to timely file corrected drawings on or before February 17, 2006, as required by the Notice of Allowability mailed November 17, 2005. A Notice of Abandonment was mailed on April 24, 2006.

The petition satisfies the conditions for revival pursuant to the provisions of 37 CFR 1.137(b) in that (1) the reply in the form of drawings (note attached Notice of Draftsperson's Patent Drawing Review); (2) the $750 petition fee; (3) the required statement of unintentional delay; and (4) a terminal disclaimer as required by 37 CFR 1.137(d) have been received. Accordingly, the reply to the Notice of November 17, 2005 is accepted as having been unintentionally delayed.

The terminal disclaimer filed June 12, 2006 has been accepted and made of record.

Telephone inquiries concerning this decision should be directed to the undersigned at (571) 272-3218.

This matter is being referred to Publishing Division.

Frances Hicks
Petitions Examiner
Office of Petitions

Attachment: Notice of Draftsperson's Patent Drawing Review

UNITED STATES PATENT AND TRADEMARK OFFICE

Commissioner for Patents
United States Patent and Trademark Office
P.O. Box 1450
Alexandria, VA 22313-1450
www.uspto.gov

MEHRMAN LAW OFFICE PC
ONE PREMIER PLAZA
5605 GLENRIDGE DRIVE
SUITE 795
ATLANTA, GA 30342

COPY MAILED

JUL 27 2006

OFFICE OF PETITIONS

In re Application of	:	
Neil McCord et al	:	
Application No. 29/205,261	:	DECISION GRANTING PETITION
Filed: May 12, 2004	:	UNDER 37 CFR 1.137(b)
Attorney Docket No. 4S01.1-100	:	

This is a decision on the petition under 37 CFR 1.137(b), filed June 12, 2006, to revive the above-identified application.

The petition is **GRANTED**.

This application became abandoned for failure to timely file corrected drawings on or before February 17, 2006, as required by the Notice of Allowability mailed November 17, 2005. A Notice of Abandonment was mailed on April 24, 2006.

The petition satisfies the conditions for revival pursuant to the provisions of 37 CFR 1.137(b) in that (1) the reply in the form of drawings (note attached Notice of Draftsperson's Patent Drawing Review); (2) the $750 petition fee; (3) the required statement of unintentional delay; and (4) a terminal disclaimer as required by 37 CFR 1.137(d) have been received. Accordingly, the reply to the Notice of November 17, 2005 is accepted as having been unintentionally delayed.

The terminal disclaimer filed June 12, 2006 has been accepted and made of record.

Telephone inquiries concerning this decision should be directed to the undersigned at (571) 272-3218.

This matter is being referred to Publishing Division.

Frances Hicks
Petitions Examiner
Office of Petitions

Attachment: Notice of Draftsperson's Patent Drawing Review

UNITED STATES PATENT AND TRADEMARK OFFICE

COMMISSIONER FOR PATENTS
UNITED STATES PATENT AND TRADEMARK OFFICE
P.O. BOX 1450
ALEXANDRIA, VA 22313-1450
WWW.USPTO.GOV

Paper No. None

ASHKAN NAJAFI, P.A.
6817 SOUTHPOINT PARKWAY
SUITE 2301
JACKSONVILLE FL 32216

COPY MAILED
MAY 0 2 2006
OFFICE OF PETITIONS

In re Application of	:	
Judy Jackson	:	
Application No. 29/205,265	:	DECISION ON PETITION
Filed: May 12, 2004	:	UNDER 37 C.F.R. §1.181(A)
Attorney Docket Number: BHA407	:	
Title: STETHOSCOPE AND ASSOCIATED HEADSET	:	

This is a decision on the petition under 37 C.F.R. §1.181(a) to withdraw the holding of abandonment, filed on March 3, 2006.

BACKGROUND

The above-identified application became abandoned for failure to submit corrected drawings in a timely manner in reply to the Notice of Allowance and Issue Fee Due, mailed June 29, 2005, which set a shortened statutory period for reply of three (3) months. The issue fee was received on August 24, 2005. No extensions of time are permitted for transmitting formal drawings[1]. Accordingly, the above-identified application became abandoned on September 30, 2005. A Notice of Abandonment was mailed on January 30, 2006.

With the present petition, Petitioner has alleged that corrected drawings were submitted on September 15, 2005. Petitioner has included a copy of this response.

1 See MPEP §710.02(e).

RELEVANT PORTIONS OF THE C.F.R.

37 C.F.R. §1.8(b) sets forth, *in toto*:

> (b) In the event that correspondence is considered timely filed by being mailed or transmitted in accordance with paragraph (a) of this section, but not received in the U.S. Patent and Trademark Office after a reasonable amount of time has elapsed from the time of mailing or transmitting of the correspondence, or after the application is held to be abandoned, or after the proceeding is dismissed, terminated, or decided with prejudice, the correspondence will be considered timely if the party who forwarded such correspondence:
>
> (1) Informs the Office of the previous mailing or transmission of the correspondence promptly after becoming aware that the Office has no evidence of receipt of the correspondence;
>
> (2) Supplies an additional copy of the previously mailed or transmitted correspondence and certificate; and
>
> (3) Includes a statement which attests on a personal knowledge basis or to the satisfaction of the Director to the previous timely mailing or transmission. If the correspondence was sent by facsimile transmission, a copy of the sending unit's report confirming transmission may be used to support this statement.

ANALYSIS

The showing in the present petition is not sufficient to withdraw the holding of abandonment. Petitioner has asserted that he submitted a response to the non-final Office action on September 15, 2005.

Certificate of mailing practice provides a mechanism by which Applicants may evince that a paper was timely submitted to the Office, in the event that the correspondence is not received. Petitioner's submission has been reviewed, and it does not appear to contain a certificate of mailing. As such, it does not appear that Petitioner can comply with 37 C.F.R. §1.8(b)(2).

Petitioner has asserted that a certificate of mailing appears on the "transmittal form dated 09/15/2005[2]." No transmittal form bearing this date has been located in the electronic file. Perhaps Petitioner inadvertently failed to include this form when submitting this petition? Alternatively, a sheet has been located in the electronic file which bears this date - perhaps Petitioner is referring to this sheet? This sheet is entitled "Proposed Drawing Modification," but fails to contain a certificate of mailing.

---

2 Petition, page 1.

Pursuant to the discussion above, the petition under 37 C.F.R. §1.181 must be **DISMISSED**.

CONCLUSION

Any reply must be submitted within **TWO (2) MONTHS** from the mail date of this decision. Extensions of time under 37 C.F.R. §1.136(a) are permitted. The reply should include a cover letter entitled "Renewed Petition Under 37 C.F.R. 1.181." This is not a final agency action within the meaning of 5 U.S.C 704.

Alternatively, Petitioner may wish to consider filing a petition under 37 C.F.R. §§1.137(a) and/or (b).

Any subsequent petition should indicate in a prominent manner that the attorney handling this matter is Paul Shanoski, and may be submitted by mail[3], hand-delivery[4], or facsimile[5].

Paul Shanoski

Paul Shanoski
Senior Attorney
Office of Petitions
United States Patent and Trademark Office

---

3 Mail Stop Petition, Commissioner for Patents, United States Patent and Trademark Office, P.O. Box 1450, Alexandria, VA, 22313-1450.
4 Customer Window, Randolph Building, 401 Dulaney Street, Alexandria, VA, 22314.
5 (571) 273-8300- please note this is a central facsimile number.

UNITED STATES PATENT AND TRADEMARK OFFICE

COMMISSIONER FOR PATENTS
UNITED STATES PATENT AND TRADEMARK OFFICE
P.O. BOX 1450
ALEXANDRIA, VA 22313-1450
WWW.USPTO.GOV

Paper No. None

ASHKAN NAJAFI, P.A.
6817 SOUTHPOINT PARKWAY
SUITE 2301
JACKSONVILLE FL 32216

COPY MAILED
JUL 11 2006
OFFICE OF PETITIONS

In re Application of	:	
Judy Jackson	:	
Application No. 29/205,265	:	DECISION ON RENEWED PETITION
Filed: May 12, 2004	:	UNDER 37 C.F.R. §1.181(A)
Attorney Docket Number: BHA407	:	
Title: STETHOSCOPE AND ASSOCIATED HEADSET	:	

This is a decision on the renewed petition under 37 C.F.R. §1.181(a) to withdraw the holding of abandonment, filed on May 24, 2006.

BACKGROUND

The above-identified application became abandoned for failure to submit corrected drawings in a timely manner in reply to the Notice of Allowance and Issue Fee Due, mailed June 29, 2005, which set a shortened statutory period for reply of three (3) months. The issue fee was received on August 24, 2005. No extensions of time are permitted for transmitting formal drawings[1]. Accordingly, the above-identified application became abandoned on September 30, 2005. A Notice of Abandonment was mailed on January 30, 2006.

A petition was submitted on March 3, 2006, which was dismissed via the mailing of a decision on May 2, 2006. Petitioner asserted that corrected drawings had been presented to the Office on September 15, 2005 along with a certificate of mailing dated September 15, 2005. Petitioner included a copy of the

1 See MPEP §710.02(e).

drawings, but no paper which contained this certificate of mailing had been included with the petition.

RELEVANT PORTION OF THE C.F.R.

37 C.F.R. §1.8(b) sets forth, *in toto*:

> (b) In the event that correspondence is considered timely filed by being mailed or transmitted in accordance with paragraph (a) of this section, but not received in the U.S. Patent and Trademark Office after a reasonable amount of time has elapsed from the time of mailing or transmitting of the correspondence, or after the application is held to be abandoned, or after the proceeding is dismissed, terminated, or decided with prejudice, the correspondence will be considered timely if the party who forwarded such correspondence:
>
> (1) Informs the Office of the previous mailing or transmission of the correspondence promptly after becoming aware that the Office has no evidence of receipt of the correspondence;
>
> (2) Supplies an additional copy of the previously mailed or transmitted correspondence and certificate; and
>
> (3) Includes a statement which attests on a personal knowledge basis or to the satisfaction of the Director to the previous timely mailing or transmission. If the correspondence was sent by facsimile transmission, a copy of the sending unit's report confirming transmission may be used to support this statement.

ANALYSIS

The showing in the present petition is not sufficient to withdraw the holding of abandonment. Petitioner has asserted that he submitted a response to the non-final Office action on September 15, 2005, and has explained that the certificate of mailing had been omitted from the original petition. With this renewed petition, Petitioner has submitted a transmittal form, with the box adjacent to the text "drawings" which has been checked, bearing a certificate of mailing date of September 15, 2005.

Certificate of mailing practice provides a mechanism by which Applicants may evince that a paper was timely submitted to the Office, in the event that the correspondence is not received.

Petitioner's submission has been reviewed: with the original petition, Petitioner informed the Office of the previous mailing and provided an additional copy of the previously mailed correspondence. With this renewed petition, Petitioner has supplied an additional copy of the previously mailed certificate. However, it is noted that the certificate of

mailing was executed by one Ms. Vicki Kay Van Sickle, and it does not appear that Petitioner has included a statement from this individual. 37 C.F.R. §1.8(b)(3) requires the inclusion of a statement which attests on a personal knowledge basis or to the satisfaction of the Director to the previous timely mailing or transmission. On renewed petition, Petitioner may wish to include a statement from Ms. Kay Van Sickle.

Pursuant to the discussion above, the petition under 37 C.F.R. §1.181 must again be **DISMISSED**.

CONCLUSION

Any reply must be submitted within **TWO (2) MONTHS** from the mail date of this decision. Extensions of time under 37 C.F.R. §1.136(a) are permitted. The reply should include a cover letter entitled "Renewed Petition Under 37 C.F.R. 1.181." This is not a final agency action within the meaning of 5 U.S.C 704.

Alternatively, Petitioner may wish to consider filing a petition under 37 C.F.R. §§1.137(a) and/or (b).

Any subsequent petition should indicate in a prominent manner that the attorney handling this matter is Paul Shanoski, and may be submitted by mail[2], hand-delivery[3], or facsimile[4].

Paul Shanoski

Paul Shanoski
Senior Attorney
Office of Petitions
United States Patent and Trademark Office

2 Mail Stop Petition, Commissioner for Patents, United States Patent and Trademark Office, P.O. Box 1450, Alexandria, VA, 22313-1450.
3 Customer Window, Randolph Building, 401 Dulaney Street, Alexandria, VA, 22314.
4 (571) 273-8300- please note this is a central facsimile number.

UNITED STATES PATENT AND TRADEMARK OFFICE

COMMISSIONER FOR PATENTS
UNITED STATES PATENT AND TRADEMARK OFFICE
P.O. BOX 1450
ALEXANDRIA, VA 22313-1450
WWW.USPTO.GOV

Paper No. None

ASHKAN NAJAFI, P.A.
6817 SOUTHPOINT PARKWAY
SUITE 2301
JACKSONVILLE FL 32216

COPY MAILED
AUG 28 2006
OFFICE OF PETITIONS

In re Application of	:	
Judy Jackson	:	
Application No. 29/205,265	:	DECISION ON SECOND RENEWED
Filed: May 12, 2004	:	PETITION UNDER 37 C.F.R.
Attorney Docket Number: BHA407	:	§1.181(A)
Title: STETHOSCOPE AND	:	
ASSOCIATED HEADSET	:	

This is a decision on the second renewed petition under 37 C.F.R. §1.181(a) to withdraw the holding of abandonment, filed on August 3, 2006.

The above-identified application became abandoned for failure to submit corrected drawings in a timely manner in reply to the Notice of Allowance and Issue Fee Due, mailed June 29, 2005, which set a shortened statutory period for reply of three (3) months. The issue fee was received on August 24, 2005. No extensions of time are permitted for transmitting formal drawings[1]. Accordingly, the above-identified application became abandoned on September 30, 2005. A Notice of Abandonment was mailed on January 30, 2006.

A petition was submitted on March 3, 2006, which was dismissed via the mailing of a decision on May 2, 2006. Petitioner asserted that corrected drawings had been presented to the Office on September 15, 2005 along with a certificate of mailing dated September 15, 2005. Petitioner included a copy of the drawings, but no paper which contained this certificate of mailing was included with this petition.

1 See MPEP §710.02(e).

The renewed petition was filed on May 24, 2006 along with a transmittal form, which contained a box adjacent to the text "drawings" which had been checked, and bore a certificate of mailing date of September 15, 2005. The renewed petition was dismissed via the mailing of a decision on July 11, 2006 for failure to comply with 37 C.F.R. §1.8(b)(3).

With this second renewed petition, Petitioner has provided a statement of facts from Ms. Van Sickle, thus complying with 37 C.F.R. §1.8(b)(3).

As such, this second renewed petition is **GRANTED**.

The Office of Patent Publication will be notified of this decision, so that this application can receive further processing into a patent.

Telephone inquiries regarding *this decision* should be directed to the undersigned at (571) 272-3225[2]. All other inquiries concerning examination procedures or status of the application should be directed to the Technology Center.

Paul Shanoski
Senior Attorney
Office of Petitions
United States Patent and Trademark Office

Encl. Draftperson's Patent Drawing Review

---

2 Petitioner will note that all practice before the Office should be in writing, and the action of the Office will be based exclusively on the written record in the Office. See 37 C.F.R. §1.2. As such, Petitioner is reminded that no telephone discussion may be controlling or considered authority for Petitioner's further action(s).

Form PTO-948 (Rev. 06/03) 29205265
Application No.

U.S. DEPARTMENT OF COMMERCE
U.S. Patent and Trademark Office

NOTICE OF DRAFTSPERSON'S PATENT DRAWING REVIEW

The drawing(s) filed (insert date) 06/30/2006 are:

A. ✓ approved by the Draftsperson under 37 CFR 1.84 or 1.152.

B. ____ objected to by the Draftsperson under 37 CFR 1.84 or 1.152 for the reasons indicated below. Corrected drawings are required.

1. DRAWINGS. 37 CFR 1.84(a): Acceptable categories of drawings: Black ink or Color (3 sets required).
___ Color drawings are not acceptable until petition is granted. Fig(s)____
___ Pencil and non black ink not permitted. Fig(s)____

2. PHOTOGRAPHS. 37 CFR 1.84(b)
___ One (1) full-tone set is required. Fig(s)____
___ Photographs may not be mounted. 37 CFR 1.84(e)
___ Photographs must meet paper size requirements of 37 CFR 1.84(f). Fig(s)____
___ Poor quality (half-tone). Fig(s)____

3. TYPE OF PAPER. 37 CFR 1.84(e)
___ Paper not flexible, strong, white, and durable. Fig(s)____
___ Erasures, alterations, overwritings, interlineations, folds, copy machine marks not accepted. Fig(s)____

4. SIZE OF PAPER. 37 CFR 1.84(f): Acceptable sizes:
21.0 cm by 29.7 cm (DIN size A4) or
21.6 cm by 27.9 cm (8 1/2x 11 inches)
___ All drawing sheets not the same size. Sheet(s)____
___ Drawings sheets not an acceptable size. Fig(s)____

5. MARGINS. 37 CFR 1.84(g): Acceptable margins:
Top 2.5 cm Left 2.5 cm Right 1.5 cm Bottom 1.0 cm
___ Margins not acceptable. Fig(s)____
____Top (T) ____ Left (L)
____Right (R) ____ Bottom (B)

6. VIEWS. 37 CFR 1.84(h)
REMINDER: Specification may require revision to correspond to drawing changes, e.g., if Fig. 1 is changed to Fig. 1A, Fig 1B and Fig. 1C, etc., the specification, at the Brief Description of the Drawings, must likewise be changed.
___Views not labeled separately or properly. Fig(s)____

7. SECTIONAL VIEWS. 37 CFR 1.84(h)(3)
____ Sectional designation should be noted with Arabic or Roman numbers. Fig(s)____

8. ARRANGEMENT OF VIEWS. 37 CFR 1.84(i)
___ Words do not appear on a horizontal, left-to-right fashion when page is either upright or turned so that the top becomes the right side, except for graphs. Fig(s)____

9. SCALE. 37 CFR 1.84(k)
___ Scale not large enough to show mechanism without crowding when drawing is reduced in size to two-thirds in reproduction. Fig(s)____

10. CHARACTER OF LINES, NUMBERS, & LETTERS. 37 CFR 1.84(l)
___ Lines, numbers & letters not uniformly thick and well defined, clean, durable, and black (poor line quality). Fig(s)____

11. SHADING. 37 CFR 1.84(m)
___ Solid black areas pale. Fig(s)____
___ Solid black shading not permitted. Fig(s)____

12. NUMBERS, LETTERS, & REFERENCE CHARACTERS. 37 CFR 1.84(p)
___ Numbers and reference characters not plain and legible. Fig(s)____
___ Figure legends are poor. Fig(s)____
___ Numbers and reference characters not oriented in the same direction as the view. 37 CFR 1.84(p)(1) Fig(s)____
___ English alphabet not used. 37 CFR 1.84(p)(2) Fig(s)____
___ Numbers, letters and reference characters must be at least 32 cm (1/8 inch) in height. 37 CFR 1.84(p)(3). Fig(s)____

13. LEAD LINES. 37 CFR 1.84(q)
___ Lead lines missing. Fig(s)____

14. NUMBERING OF SHEETS OF DRAWINGS. 37 CFR 1.84(t)
___ Sheets not numbered consecutively, and in Arabic numbers beginning with number 1. Sheet(s)____

15. NUMBERING OF VIEWS. 37 CFR 1.84(u)
___ Views not numbered consecutively, and in Arabic numerals, beginning with number 1. Fig(s)____

16. DESIGN DRAWINGS. 37 CFR 1.152
___ Surface shading shown not appropriate. Fig(s)____
___ Solid black surface shading is not permitted except when used to represent the color black as well as color contrast. Fig(s)____

COMMENTS:

Reviewer Tang

Date 08/21/2006

If you have questions, call (703) 305.0333 x132

Attachment to Paper No. ____

☆ U.S. GOVERNMENT PRINTING OFFICE: 2003-300-153

UNITED STATES PATENT AND TRADEMARK OFFICE

Commissioner for Patents
United States Patent and Trademark Office
P.O. Box 1450
Alexandria, VA 22313-1450
www.uspto.gov

MEHRMAN LAW OFFICE, P.C.
ONE PREMIER PLAZA
5605 GLENRIDGE DRIVE, STE. 795
ATLANTA GA 30342

COPY MAILED
AUG 1 8 2006
OFFICE OF PETITIONS

In re Application of McCord et al. Application No. 29/205,277 Filed: May 12, 2004 Attorney Docket No. 4S01.1-070	: : : : :	DECISION ON PETITION

This is a decision on the petition under 37 CFR 1.137(b), filed June 12, 2006, to revive the above-identified application.

This application became abandoned for failure to timely submit the issue fee, as required by the Notice of Allowance and Fee (s) Due, and submit corrected drawings, as required by the Notice of Allowability both of which were mailed December 30, 2005. The Notice of Allowance and Issue Fee Due and the Notice of Allowability set a three (3) month period for reply. Extensions of time were not available under the provisions of 37 CFR §1.136(a). Accordingly, this application became abandoned on March 31, 2006. A Notice of Abandonment was mailed on May 4, 2006.

The requirements to revive a petition under 37 CFR §1.137(b) have been met. This petition is hereby **Granted**.

The Office is in receipt of the Terminal Disclaimer.

This application is being forwarded to the Office of Patent Publication for processing into a patent.

Telephone inquiries concerning this matter should be directed to the undersigned at (571) 272-3215.

Charlema R. Grant

Charlema R. Grant
Petitions Attorney
Office of Petitions

UNITED STATES PATENT AND TRADEMARK OFFICE

COMMISSIONER FOR PATENTS
UNITED STATES PATENT AND TRADEMARK OFFICE
P.O. BOX 1450
ALEXANDRIA, VA 22313-1450
www.uspto.gov

BEESON SKINNER BEVERLY LLP
ONE KAISER PLAZA, SUITE 750
OAKLAND, CA 94612

COPY MAILED

JAN 16 2008

OFFICE OF PETITIONS

In re Application of
Nicholas F. Talesfore, et al.
Application No. 29/205,328
Filed: May 11, 2004
Attorney Docket No. K200-046.CIP.DES

ON PETITION

This is a decision on the petition under 37 CFR 1.137(b), filed October 1, 2007, to revive the above-identified design application.

The petition is **GRANTED**.

The application became abandoned for failure to timely pay the issue fee on or before September 4, 2007, as required by the Notice of Allowance and Fee(s) Due, mailed June 1, 2007, which set a statutory period for reply of three (3) months. A Notice of Abandonment was mailed on September 26, 2007. In response, on October 1, 2007, the present petition was filed.

The petition satisfies the requirements of 37 CFR 1.137(b) in that petitioner has supplied (1) the reply in the form of the $400 issue fee, (2) the petition fee of $750, (3) an adequate statement of unintentional delay, and (4) a terminal disclaimer and fee as required by 37 CFR 1.137(d). Accordingly, the failure to timely pay the issue fee as required by the Notice of June 1, 2007 is accepted as being unintentionally delayed.

The terminal disclaimer is accepted and has been made of record. Any continuing application filed from this application must contain a copy of the terminal disclaimer. The copy of the terminal disclaimer must be filed with a cover letter requesting the terminal disclaimer be recorded on the continuing application. A copy of this decision should be attached to the cover letter.

The application is being referred to Publishing Division.

Telephone inquires related to this decision should be directed to the undersigned at (571) 272-3204. Telephone inquiries related to processing at Publishing Division should be directed to (571) 272-4200.

Sherry D. Brinkley
Petitions Examiner
Office of Petitions

re 29/205331

SPE RESPONSE FOR CERTIFICATE OF CORRECTION

Originally Wind 4-27-06

Paper No.: _____

DATE : September 29, 2006

TO SPE OF : ART UNIT 2915

SUBJECT : Request for Certificate of Correction for Appl. No.: 29/205331 patent No.: D511513

Please respond to this request for a certificate of correction within 7 days.

Please review the requested changes/corrections as shown in the **COCIN** document(s) in the IFW application image. No new matter should be introduced, nor should the scope or meaning of the claims be changed.

Please complete the response (see below) and forward the completed response to scanning using document code **COCX**.

Magdalene Talley

Certificates of Correction Branch

703-308-9390 ext. 116

Thank You For Your Assistance

The request for issuing the above-identified correction(s) is hereby:

Note your decision on the appropriate box.

- [x] **Approved** — **All** changes apply.
- [ ] **Approved in Part** — Specify below which changes **do not** apply.
- [ ] **Denied** — State the reasons for denial below.

Comments: THE PATENT DRAWINGS SHOULD CONSIST OF FIGS 1-7 OF THE REPLACEMENT DRAWINGS FILED 4-13-2005. (NOT THE ORIGINAL FILED DRAWINGS.)

[signature] 2916

SPE **Art Unit**

PTOL-306 (REV. 7/03)

U.S. DEPARTMENT OF COMMERCE Patent and Trademark Office

FOR IAN SIMMONS

SPE RESPONSE FOR CERTIFICATE OF CORRECTION

Originally Wand 4-27-06

Paper No.: _____

DATE : September 29, 2006

TO SPE OF : ART UNIT 2915

SUBJECT : Request for Certificate of Correction for Appl. No.: 29/205331 patent No.: D511513

Please respond to this request for a certificate of correction within 7 days.

Please review the requested changes/corrections as shown in the **COCIN** document(s) in the IFW application image. No new matter should be introduced, nor should the scope or meaning of the claims be changed.

Please complete the response (see below) and forward the completed response to scanning using document code **COCX**.

Magdalene Talley

Certificates of Correction Branch

703-308-9390 ext. 116

Thank You For Your Assistance

The request for issuing the above-identified correction(s) is hereby:

Note your decision on the appropriate box.

- ☒ **Approved** — **All** changes apply.
- ☐ **Approved in Part** — Specify below which changes **do not** apply.
- ☐ **Denied** — State the reasons for denial below.

Comments: _____

IAN SIMMONS
SUPERVISORY PATENT EXAMINER

2916

SPE **Art Unit**

PTOL-306 (REV. 7/03)

U.S. DEPARTMENT OF COMMERCE Patent and Trademark Office

UNITED STATES PATENT AND TRADEMARK OFFICE

Commissioner for Patents
United States Patent and Trademark Office
P.O. Box 1450
Alexandria, VA 22313-1450
www.uspto.gov

JJGJr: 09-05

Paper No: __

A. THOMAS KAMMER, ESQ.
HOFFMANN & BARON, LLP
6900 JERICHO TURNPIKE
SYOSSET NY 11791

COPY MAILED

SEP 2 2 2005

OFFICE OF PETITIONS

In re Application of	:	
Ryan	:	
Application No. 29/205,340	:	DECISION ON PETITION
Filed: 13 May, 2004	:	
Attorney Docket No.: 717-926 DES	:	

This is a decision on the renewed petition under 37 C.F.R. §1.53, and also considered under 37 C.F.R. §1.10, filed on 8 August, 2005, and seeking for the above-identified application a filing date of 13 May, 2004, rather than the presently accorded filing date of 12 May, 2004.

The petition is **GRANTED**.

BACKGROUND AND ANALYSIS

The starting point of the discussion is the controlling law, *i.e.*, the regulations at 37 C.F.R. §1.10.(c) provide in pertinent part:

* * *

> (c) Any person filing correspondence under this section that was received by the Office and delivered by the "Express Mail Post Office to Addressee" service of the USPS, who can show that there is a discrepancy between the filing date accorded by the Office to the correspondence and the date of deposit as shown by the "date-in" on the "Express Mail" mailing label or other official USPS notation, may petition the Director to accord the correspondence a filing date as of the "date-in" on the "Express Mail" mailing label or other official USPS notation, provided that:

> (1) The petition is filed promptly after the person becomes aware that the Office has accorded, or will accord, a filing date other than the USPS deposit date;
>
> (2) The number of the "Express Mail" mailing label was placed on the paper(s) or fee(s) that constitute the correspondence prior to the original mailing by "Express Mail;" and
>
> (3) The petition includes a true copy of the "Express Mail" mailing label showing the "date-in," and of any other official notation by the USPS relied upon to show the date of deposit. (Emphasis supplied.)[1]
>
> * * *

The record reflects that:

- the instant application was received by the Office on 14 May, 2004, and given a filing date of 12 May, 2004, while it appears that the US Postal Service (USPS) placed a date of "5/13/04" as the hand-written "date in," of its acceptance of the package bearing USPS Express Mail Label No. EL561493912US, and the petition contends that the instant application submitted with that USPS Express Mail Label Number was in fact deposited with the USPS on 13 May, 2003;

- the Office mailed a filing receipt on 25 June, 2004, bearing a filing date of 12 May, 2004, and on 6 July, 2004, Petitioner filed with the Office a request for a corrected filing receipt, to which request the Office responded on 29 July, 2004, with the statement that Petitioner had failed to enclose with the request a copy of the USPS Express Mail label;

- on 10 August, 2004, Petitioner filed with the Office a second request for a corrected filing receipt but again seems to have failed to enclose therewith a copy of the USPS Express

---

[1] The regulations at 37 C.F.R. §1.10 provide, in pertinent part:

§ 1.10 Filing of papers and fees by "Express Mail."

(a) Any correspondence received by the Patent and Trademark Office (Office) that was delivered by the "Express Mail Post Office to Addressee" service of the United States Postal Service (USPS) will be considered filed in the Office on the date of deposit with the USPS. The date of deposit with the USPS is shown by the "date-in" on the "Express Mail" mailing label or other official USPS notation. If the USPS deposit date cannot be determined, the correspondence will be accorded the Office receipt date as the filing date. See § 1.6(a).

* * *

(b) Correspondence should be deposited directly with an employee of the USPS to ensure that the person depositing the correspondence receives a legible copy of the "Express Mail" mailing label with the "date-in" clearly marked. Persons dealing indirectly with the employees of the USPS (such as by deposit in an "Express Mail" drop box) do so at the risk of not receiving a copy of the "Express Mail" mailing label with the desired "date-in" clearly marked. The paper(s) or fee(s) that constitute the correspondence should also include the "Express Mail" mailing label number thereon. See paragraphs (c), (d) and (e) of this section.

* * *

(f) The Office may require additional evidence to determine if the correspondence was deposited as "Express Mail" with the USPS on the date in question. (Emphasis supplied.) [48 Fed. Reg. 2708, Jan. 20, 1983, added effective Feb. 27, 1983; 48 Fed. Reg. 4285, Jan. 31, 1983, paras. (a) & (c), 49 Fed. Reg. 552, Jan. 4, 1984, effective Apr. 1, 1984; paras. (a)-(c) revised and paras. (d) - (f) added, 61 Fed. Reg. 56439, Nov. 1, 1996, effective Dec. 2, 1996; paras. (d) & (e) revised, 62 Fed. Reg. 53131, Oct. 10, 1997, effective Dec. 1, 1997]

Mail label, and this time the Office seems not to have responded to the request;

- Petitioner seems not to have readdressed this matter until the filing of the instant petition–almost a year to the date later, and with the instant petition Petitioner this time provides a copy of the USPS Express Mail label No. EL561493912US, which has a hand-written "date in" of "5/13/04" and a date stamped date of "MAY 13, 2004";

- while the petition does not refer to it, a review was made of the USPS "Track & Confirm" website (at www.usps.com) and a request was made for a tracking statement from the USPS as to the package bearing USPS Express Mail label No. EL561493912US, which request produced an Email response (a copy of which is being enclosed for Petitioner and a copy of which is being entered into the record) indicating "Acceptance SYOSSET NY 11791 05/13/04 4:51 p.m."

Petitioner is reminded as to the time requirements of under 37 C.F.R. §1.10. The fact that Petitioner twice requested corrected filing receipts is taken into consideration herein, but it is noted that Petitioner twice failed to submit a copy of the USPS Express Mail label (even after being requested to do so), and Petitioner seems to have lost track of the matter after the second request. Moreover, Petitioner does not appear to have appreciated the proper mechanism for correcting the matter at hand–i.e., a petition under the provisions of under 37 C.F.R. §1.10.

In addition, Petitioner would find it beneficial for record-keeping purposes and for creating an appropriate paper trail of evidence for matters such as these, to obtain such supporting documentation from the USPS website a day or two after delivery of a transmittal to the Office is scheduled.

Accordingly, the petition hereby is **granted**, and the petition fee is waived.

The instant file is released to OIPE to correct the filing date so as to accord to the instant application a filing date of 13 May, 2004, and to mail to Petitioner a corrected filing receipt reflecting a filing date of 13 May, 2004.

Telephone inquiries concerning this decision may be directed to the undersigned at (571) 272-3214.

John J. Gillon, Jr.
Senior Attorney
Office of Petitions

Encl: copy of the USPS Tracking Confirmation

UNITED STATES PATENT AND TRADEMARK OFFICE

Commissioner for Patents
United States Patent and Trademark Office
P.O. Box 1450
Alexandria, VA 22313-1450
www.uspto.gov

FROSS, ZELNICK, LEHRMAN & ZISSU
866 UNITED NATIONS PLAZA
NEW YORK NY 10017

COPY MAILED

JAN 0 8 2007

OFFICE OF PETITIONS

In re Patent No. D504216 :
Issue Date: April 26, 2005 :
Application No. 29/205,347 :
Filed: May 12, 2004 :
Attorney Docket No. JCHO USA PA-0416574 :

NOTICE

This is a notice regarding your request for acceptance of a fee deficiency submission under 37 CFR 1.28. On September 1, 1998, the Court of Appeals for the Federal Circuit held that 37 CFR 1.28(c) is the sole provision governing the time for correction of the erroneous payment of the issue fee as a small entity. **See DH Technology v. Synergystex International, Inc. 154 F.3d 1333, 47 USPQ2d 1865 (Fed. Cir. Sept. 1, 1998).**

The Office no longer investigates or rejects original or reissue applications under 37 CFR 1.56. **1098 Off. Gaz. Pat. Office 502 (January 3, 1989).** Therefore, nothing in this Notice is intended to imply that an investigation was done.

Your fee deficiency submission under 37 CFR 1.28 is hereby **ACCEPTED**.

This application no longer qualifies for small entity status. Accordingly, all future fees must be paid at the large entity rate.

Inquiries related to this communication should be directed to the undersigned at (571) 272-3208.

Karen Creasy

Karen Creasy
Petitions Examiner
Office of Petitions

UNITED STATES PATENT AND TRADEMARK OFFICE

Commissioner for Patents
United States Patent and Trademark Office
P.O. Box 1450
Alexandria, VA 22313-1450
www.uspto.gov

LAWRENCE E. APOLZON
FROSS ZELNICK LEHRMAN & ZISSU, P.C.
866 UNITED NATIONS PLAZA
NEW YORK, NY 10017

COPY MAILED
NOV 24 2006
OFFICE OF PETITIONS

In re Patent No. D501074 :
Issue Date: January 25, 2005 :
Application No. 29/205,349 : NOTICE
Filed: May 12, 2004 :
Attorney Docket No. JCHO USA PA-0416442

This is a notice regarding your request for acceptance of a fee deficiency submission under 37 CFR 1.28. On September 1, 1998, the Court of Appeals for the Federal Circuit held that 37 CFR 1.28(c) is the sole provision governing the time for correction of the erroneous payment of the issue fee as a small entity. **See DH Technology v. Synergystex International, Inc. 154 F.3d 1333, 47 USPQ2d 1865 (Fed. Cir. Sept. 1, 1998).**

The Office no longer investigates or rejects original or reissue applications under 37 CFR 1.56. **1098 Off. Gaz. Pat. Office 502 (January 3, 1989)**. Therefore, nothing in this Notice is intended to imply that an investigation was done.

Your fee deficiency submission under 37 CFR 1.28 is hereby **ACCEPTED**.

Inquiries related to this communication should be directed to Irvin Dingle at (571) 272-3210.

Irvin Dingle
Petitions Examiner
Office of Petitions

UNITED STATES PATENT AND TRADEMARK OFFICE

Commissioner for Patents
United States Patent and Trademark Office
P.O. Box 1450
Alexandria, VA 22313-1450
www.uspto.gov

LAWRENCE E. APOLZON
FROSS ZELNICK LEHRMAN & ZISSU, P.C.
866 UNITED NATIONS PLAZA
NEW YORK, NY 10017

COPY MAILED

JAN 22 2007

OFFICE OF PETITIONS

In re Patent No. D501709 :
Issue Date: February 15, 2005 :
Application No. 29/205,350 : NOTICE
Filed: May 12, 2004 :
Attorney Docket No. JCHO USA PA-0416440

This is a notice regarding your request for acceptance of a fee deficiency submission under 37 CFR 1.28. On September 1, 1998, the Court of Appeals for the Federal Circuit held that 37 CFR 1.28(c) is the sole provision governing the time for correction of the erroneous payment of the issue fee as a small entity. **See DH Technology v. Synergystex International, Inc. 154 F.3d 1333, 47 USPQ2d 1865 (Fed. Cir. Sept. 1, 1998).**

The Office no longer investigates or rejects original or reissue applications under 37 CFR 1.56. **1098 Off. Gaz. Pat. Office 502 (January 3, 1989)**. Therefore, nothing in this Notice is intended to imply that an investigation was done.

Your fee deficiency submission under 37 CFR 1.28 is hereby **ACCEPTED**.

Inquiries related to this communication should be directed to Irvin Dingle at (571) 272-3210.

Irvin Dingle
Petitions Examiner
Office of Petitions

UNITED STATES PATENT AND TRADEMARK OFFICE

Commissioner for Patents
United States Patent and Trademark Office
P.O. Box 1450
Alexandria, VA 22313-1450
www.uspto.gov

LAWRENCE E. APOLZON
FROSS ZELNICK LEHRMAN & ZISSU, P.C.
866 UNITED NATIONS PLAZA
NEW YORK, NY 10017

COPY MAILED

JAN 22 2007

OFFICE OF PETITIONS

In re Patent No. D521219 :
Issue Date: May 23, 2006 :
Application No. 29/205,351 : NOTICE
Filed: May 12, 2004 :
Attorney Docket No. JCHO USA PA-0416439

This is a notice regarding your request for acceptance of a fee deficiency submission under 37 CFR 1.28. On September 1, 1998, the Court of Appeals for the Federal Circuit held that 37 CFR 1.28(c) is the sole provision governing the time for correction of the erroneous payment of the issue fee as a small entity. **See DH Technology v. Synergystex International, Inc. 154 F.3d 1333, 47 USPQ2d 1865 (Fed. Cir. Sept. 1, 1998).**

The Office no longer investigates or rejects original or reissue applications under 37 CFR 1.56. **1098 Off. Gaz. Pat. Office 502 (January 3, 1989)**. Therefore, nothing in this Notice is intended to imply that an investigation was done.

Your fee deficiency submission under 37 CFR 1.28 is hereby **ACCEPTED**.

Inquiries related to this communication should be directed to Irvin Dingle at (571) 272-3210.

Irvin Dingle
Petitions Examiner
Office of Petitions

UNITED STATES PATENT AND TRADEMARK OFFICE

Commissioner for Patents
United States Patent and Trademark Office
P.O. Box 1450
Alexandria, VA 22313-1450
www.uspto.gov

LAWRENCE E. APOLZON
FROSS ZELNICK LEHRMAN & ZISSU, P.C.
866 UNITED NATIONS PLAZA
NEW YORK, NY 10017

COPY MAILED

JAN 22 2007

OFFICE OF PETITIONS

In re Patent No. D523616 :
Issue Date: June 27, 2006 :
Application No. 29/205,352 : NOTICE
Filed: May 12, 2004 :
Attorney Docket No. JCHO USA PA-0416569

This is a notice regarding your request for acceptance of a fee deficiency submission under 37 CFR 1.28. On September 1, 1998, the Court of Appeals for the Federal Circuit held that 37 CFR 1.28(c) is the sole provision governing the time for correction of the erroneous payment of the issue fee as a small entity. **See DH Technology v. Synergystex International, Inc. 154 F.3d 1333, 47 USPQ2d 1865 (Fed. Cir. Sept. 1, 1998).**

The Office no longer investigates or rejects original or reissue applications under 37 CFR 1.56. **1098 Off. Gaz. Pat. Office 502 (January 3, 1989)**. Therefore, nothing in this Notice is intended to imply that an investigation was done.

Your fee deficiency submission under 37 CFR 1.28 is hereby **ACCEPTED**.

Inquiries related to this communication should be directed to Irvin Dingle at (571) 272-3210.

Irvin Dingle
Petitions Examiner
Office of Petitions

UNITED STATES PATENT AND TRADEMARK OFFICE

Commissioner for Patents
United States Patent and Trademark Office
P.O. Box 1450
Alexandria, VA 22313-1450
www.uspto.gov

FROSS, ZELNICK, LEHRMAN & ZISSU PC
866 UNITED NATIONS PLAZA
NEW YORK, NY 10017

COPY MAILED

MAY 0 8 2007

OFFICE OF PETITIONS

In re Patent No. D-524,021	:	
Issue Date: July 4, 2006	:	
Application No. 29/205,358	:	NOTICE
Filed: May 12, 2004	:	
Attorney Docket No. JCHO USA PA-0416037	:	

This is a notice regarding your request for acceptance of a fee deficiency submission under 37 CFR 1.28. On September 1, 1998, the Court of Appeals for the Federal Circuit held that 37 CFR 1.28(c) is the sole provision governing the time for correction of the erroneous payment of the issue fee as a small entity. **See DH Technology v. Synergystex International, Inc. 154 F.3d 1333, 47 USPQ2d 1865 (Fed. Cir. Sept. 1, 1998).**

The Office no longer investigates or rejects original or reissue applications under 37 CFR 1.56. **1098 Off. Gaz. Pat. Office 502 (January 3, 1989)**. Therefore, nothing in this Notice is intended to imply that an investigation was done.

Your fee deficiency submission under 37 CFR 1.28 is hereby **ACCEPTED**.

This application is no longer entitled to small entity status. Accordingly, all future fees paid in this application must be paid at the large entity rate.

Inquiries related to this communication should be directed to the undersigned at (571) 272-3218.

Frances Hicks

Frances Hicks
Petitions Examiner
Office of Petitions

UNITED STATES PATENT AND TRADEMARK OFFICE

Commissioner for Patents
United States Patent and Trademark Office
P.O. Box 1450
Alexandria, VA 22313-1450
www.uspto.gov

FROSS, ZELNICK, LEHRMAN & ZISSU PC
866 UNITED NATIONS PLAZA
NEW YORK, NY 10017

COPY MAILED

MAY 0 8 2007

OFFICE OF PETITIONS

In re Patent No. D-501,710	:	
Issue Date: February 15, 2005	:	
Application No. 29/205,360	:	NOTICE
Filed: May 12, 2004	:	
Attorney Docket No. JCHO USA PA-0416436	:	

This is a notice regarding your request for acceptance of a fee deficiency submission under 37 CFR 1.28. On September 1, 1998, the Court of Appeals for the Federal Circuit held that 37 CFR 1.28(c) is the sole provision governing the time for correction of the erroneous payment of the issue fee as a small entity. **See DH Technology v. Synergystex International, Inc. 154 F.3d 1333, 47 USPQ2d 1865 (Fed. Cir. Sept. 1, 1998).**

The Office no longer investigates or rejects original or reissue applications under 37 CFR 1.56. **1098 Off. Gaz. Pat. Office 502 (January 3, 1989)**. Therefore, nothing in this Notice is intended to imply that an investigation was done.

Your fee deficiency submission under 37 CFR 1.28 is hereby **ACCEPTED**.

This application is no longer entitled to small entity status. Accordingly, all future fees paid in this application must be paid at the large entity rate.

Inquiries related to this communication should be directed to the undersigned at (571) 272-3218.

Frances Hicks
Petitions Examiner
Office of Petitions

UNITED STATES PATENT AND TRADEMARK OFFICE

Commissioner for Patents
United States Patent and Trademark Office
P.O. Box 1450
Alexandria, VA 22313-1450
www.uspto.gov

SCULLY SCOTT MURPHY & PRESSER, PC
400 GARDEN CITY PLAZA
SUITE 300
GARDEN CITY, NY 11530

COPY MAILED
JUL 21 2006
OFFICE OF PETITIONS

In re Application of

Lobman, et al.

Application No. 29/205,372

Filed: May 13, 2004

Attorney Docket No. 17457D

DECISION ON PETITION

This is a decision on the petition under 37 CFR 1.137(b), filed May 8, 2006, to revive the above-identified application.

The petition is **GRANTED**.

The above-cited application became abandoned for failure to reply in a timely manner to the Notice of Allowability mailed September 7, 2005, which set a statutory period for reply of three (3) months from its mailing date. The Notice of Allowability required corrected drawings to be filed. Accordingly, the application became abandoned on December 8, 2005. A Notice of Abandonment was mailed on January 30, 2006.

The drawings filed May 8, 2006, are noted.

The terminal disclaimer filed May 8, 2006, is also noted.

The application is being forwarded to the Office of Patent Publications for further processing.

Telephone inquiries concerning this decision should be directed to the undersigned at (571) 272-3222.

Kenya A. McLaughlin
Petitions Attorney
Office of Petitions

UNITED STATES PATENT AND TRADEMARK OFFICE

COMMISSIONER FOR PATENTS
UNITED STATES PATENT AND TRADEMARK OFFICE
P.O. BOX 1450
ALEXANDRIA, VA 22313-1450
www.uspto.gov

DYKEMA GOSSETT PLLC
FRANKLIN SQUARE, THIRD FLOOR WEST
1300 I STREET, NW
WASHINGTON DC 20005

COPY MAILED
SEP 29 2006
OFFICE OF PETITIONS

In re Application of :
Sorensen, et al. :
Application No. 29/205,414 : ON PETITION
Filed: May 14, 2004 :
Attorney Docket No. 66418-093-7 :
For: PARTS FOR A DISPLAY WALL

This is a decision on the petition under 37 CFR 1.181, filed July 24, 2006, requesting that the Office withdraw the holding of abandonment of the above-identified application.

The petition under 37 CFR 1.181 is **GRANTED**.

This application was held abandoned for failure to respond in a timely manner to the Notice of Allowability, mailed January 24, 2006, which set forth a three (3) month period to submit corrected drawings. The Office contended that this application became abandoned on April 25, 2006 for failure to reply. A Notice of Abandonment was mailed on July 20, 2006.

Petitioners assert that corrected drawings were timely filed on March 29, 2006. The undersigned finds this assertion completely convincing as the drawings are present in the application file.

The petition under 37 CFR 1.181 is **granted** and the Notice of Abandonment is **vacated**. No petition fee has been or will be charged in connection with this matter.

Accordingly, the application file will be forwarded to Publications Division for processing into a patent.

Telephone inquiries pertaining to this matter may be directed to the undersigned at (571) 272-3230.

Shirene Willis Brantley

Shirene Willis Brantley
Senior Petitions Attorney
Office of Petitions
Office of the Deputy Commissioner
for Patent Examination Policy

UNITED STATES PATENT AND TRADEMARK OFFICE

UNITED STATES DEPARTMENT OF COMMERCE
United States Patent and Trademark Office
Address: COMMISSIONER FOR PATENTS
P.O. Box 1450
Alexandria, Virginia 22313-1450
www.uspto.gov

APPL NO.	FILING OR 371 (c) DATE	ART UNIT	FIL FEE REC'D	ATTY.DOCKET NO	DRAWINGS	TOT CLMS	IND CLMS
29/205,417	05/13/2004	2912	170	63584-5100	5	1	1

CONFIRMATION NO. 7303

CORRECTED FILING RECEIPT

OC000000013062335

24574
JEFFER, MANGELS, BUTLER & MARMARO, LLP
1900 AVENUE OF THE STARS, 7TH FLOOR
LOS ANGELES, CA 90067

Date Mailed: 06/28/2004

Receipt is acknowledged of this regular Patent Application. It will be considered in its order and you will be notified as to the results of the examination. Be sure to provide the U.S. APPLICATION NUMBER, FILING DATE, NAME OF APPLICANT, and TITLE OF INVENTION when inquiring about this application. Fees transmitted by check or draft are subject to collection. Please verify the accuracy of the data presented on this receipt. **If an error is noted on this Filing Receipt, please write to the Office of Initial Patent Examination's Filing Receipt Corrections, facsimile number 703-746-9195. Please provide a copy of this Filing Receipt with the changes noted thereon. If you received a "Notice to File Missing Parts" for this application, please submit any corrections to this Filing Receipt with your reply to the Notice. When the USPTO processes the reply to the Notice, the USPTO will generate another Filing Receipt incorporating the requested corrections (if appropriate).**

Applicant(s)

Christjane Burg, Ventura, CA;
Salvatore Oliva, Winthrop, MA;

Domestic Priority data as claimed by applicant

Foreign Applications

If Required, Foreign Filing License Granted: 05/18/2004

Projected Publication Date: None, application is not eligible for pre-grant publication

Non-Publication Request: No

Early Publication Request: No

**** SMALL ENTITY ****

Title

Footwear outsole

Preliminary Class

D02

LICENSE FOR FOREIGN FILING UNDER
Title 35, United States Code, Section 184
Title 37, Code of Federal Regulations, 5.11 & 5.15

GRANTED

The applicant has been granted a license under 35 U.S.C. 184, if the phrase "IF REQUIRED, FOREIGN FILING LICENSE GRANTED" followed by a date appears on this form. Such licenses are issued in all applications where the conditions for issuance of a license have been met, regardless of whether or not a license may be required as set forth in 37 CFR 5.15. The scope and limitations of this license are set forth in 37 CFR 5.15(a) unless an earlier license has been issued under 37 CFR 5.15(b). The license is subject to revocation upon written notification. The date indicated is the effective date of the license, unless an earlier license of similar scope has been granted under 37 CFR 5.13 or 5.14.

This license is to be retained by the licensee and may be used at any time on or after the effective date thereof unless it is revoked. This license is automatically transferred to any related applications(s) filed under 37 CFR 1.53(d). This license is not retroactive.

The grant of a license does not in any way lessen the responsibility of a licensee for the security of the subject matter as imposed by any Government contract or the provisions of existing laws relating to espionage and the national security or the export of technical data. Licensees should apprise themselves of current regulations especially with respect to certain countries, of other agencies, particularly the Office of Defense Trade Controls, Department of State (with respect to Arms, Munitions and Implements of War (22 CFR 121-128)); the Office of Export Administration, Department of Commerce (15 CFR 370.10 (j)); the Office of Foreign Assets Control, Department of Treasury (31 CFR Parts 500+) and the Department of Energy.

NOT GRANTED

No license under 35 U.S.C. 184 has been granted at this time, if the phrase "IF REQUIRED, FOREIGN FILING LICENSE GRANTED" DOES NOT appear on this form. Applicant may still petition for a license under 37 CFR 5.12, if a license is desired before the expiration of 6 months from the filing date of the application. If 6 months has lapsed from the filing date of this application and the licensee has not received any indication of a secrecy order under 35 U.S.C. 181, the licensee may foreign file the application pursuant to 37 CFR 5.15(b).

UNITED STATES PATENT AND TRADEMARK OFFICE

Commissioner for Patents
United States Patent and Trademark Office
P.O. Box 1450
Alexandria, VA 22313-1450
www.uspto.gov

LEYDIG, VOIT & MAYER, LTD.
(SEATTLE OFFICE)
TWO PRUDENTIAL PLAZA
SUITE 4900
CHICAGO IL 60601-6780

COPY MAILED

FEB 0 2 2006

OFFICE OF PETITIONS

In re Application of	:	
Wilgus et al.	:	
Application No. 29/205,432	:	ON PETITION
Filed: May 14, 2004	:	
Attorney Docket No. 307159	:	

This is a decision on the petition under 37 C.F.R. § 1.137(b), filed January 18, 2006, to revive the above-identified application.

The petition is **DISMISSED**.

Any request for reconsideration must be submitted within TWO (2) MONTHS from the mail date of this decision. No further petition fee is required for the request. Extensions of time under 37 CFR 1.136(a) are permitted. The reconsideration request should include a cover letter entitled "Renewed Petition under 37 CFR 1.137(b)." This is **not** a final agency action within the meaning of 5 U.S.C. § 704.

A grantable petition under 37 CFR 1.137(b) must be accompanied by:
(1) the required reply,[1]
(2) the petition fee,
(3) a statement that the entire delay in filing the required reply from the due date for the reply until the filing of a grantable petition pursuant to 37 CFR 1.137(b) was unintentional, and
(4) a terminal disclaimer and fee if the application was filed on or before June 8, 1995 or if the application is a design application.

Where there is a question as to whether either the abandonment or the delay in filing a petition under 37 CFR 1.137 was unintentional, the Commissioner may require additional information.[2]

The instant petition lacks item (4). Since the instant application is a design application, a terminal disclaimer and fee is required to be submitted with a petition under 37 CFR 1.137(b).

---

[1] In a nonprovisional application abandoned for failure to prosecute, the required reply may be met by the filing of a continuing application. In an application or patent, abandoned or lapsed for failure to pay the issue fee or any portion thereof, the required reply must be the payment of the issue fee or any outstanding balance thereof.

[2] See MPEP 711.03(c)(III)(C) and (D).

Further correspondence with respect to this matter should be addressed as follows:

By mail:	Mail Stop PETITIONS Commissioner for Patents Post Office Box 1450 Alexandria, VA 22313-1450
By hand:	Customer Window located at: U.S. Patent and Trademark Office Customer Service Window Randolph Building 401 Dulany Street Alexandria, VA 22314
By fax:	(571) 273-8300 ATTN: Office of Petitions

Any questions concerning this matter may be directed to the undersigned at (571) 272-3206.

Liana Chase
Petitions Examiner
Office of Petitions

UNITED STATES PATENT AND TRADEMARK OFFICE

Commissioner for Patents
United States Patent and Trademark Office
P.O. Box 1450
Alexandria, VA 22313-1450
www.uspto.gov

LEYDIG, VOIT & MAYER, LTD.
(SEATTLE OFFICE)
TWO PRUDENTIAL PLAZA
SUITE 4900
CHICAGO IL 60601-6780

COPY MAILED

MAR 0 8 2006

OFFICE OF PETITIONS

In re Application of	:	
Wilgus et al.	:	
Application No. 29/205,432	:	ON PETITION
Filed: May 14, 2004	:	
Attorney Docket No. 307159	:	

This is a decision on the renewed petition under 37 C.F.R. § 1.137(b), filed March 1, 2006, to revive the above-identified application.

The petition is **GRANTED.**

This matter is being referred to the Publishing Division for processing into a patent.

Telephone inquiries regarding this decision should be directed to the undersigned at (571) 272-3282.

Liana Chase
Petitions Examiner
Office of Petitions

UNITED STATES PATENT AND TRADEMARK OFFICE

Commissioner for Patents
United States Patent and Trademark Office
P.O. Box 1450
Alexandria, VA 22313-1450
www.uspto.gov

WHYTE HIRSCHBOECK DUDEK
555 EAST WELLS STREET
SUITE 1900
MILWAUKEE WI 53202

COPY MAILED

AUG 0 2 2005

OFFICE OF PETITIONS

In re Application of :
Darren J. Campbell et al :
Application No. 29/205,436 :
Filed: May 14, 2004 :
Attorney Docket No. HBR-32483 :

ON PETITION

This is a decision on the petition, filed July 28, 2005, under 37 CFR 1.313(c)(3) to withdraw the above-identified application from issue after payment of the issue fee.

The petition is **GRANTED**.

The above-identified application is withdrawn from issue in favor of a continued prosecution application (CPA) under 37 CFR 1.53(d).

Petitioner is advised that the issue fee paid on April 18, 2005 in the parent application is not refundable nor can it be applied towards any new Notice of Allowance which may issue on the CPA filed July 28, 2005.

Telephone inquiries should be directed to the undersigned at (703) 305-8859.

This matter is being referred to Technology Center AU 2915 for processing of the CPA.

Karen Creasy

Karen Creasy
Petitions Examiner
Office of Petitions
Office of the Deputy Commissioner
for Patent Examination Policy

UNITED STATES PATENT AND TRADEMARK OFFICE

Commissioner for Patents
United States Patent and Trademark Office
P.O. Box 1450
Alexandria, VA 22313-1450
www.uspto.gov

WESTERMAN, HATTORI, DANIEL & ADRIAN, LLP
Suite 700
1250 Connecticut Avenue, N.W.
Washington DC 20036

COPY MAILED

NOV 2 2 [illegible]

OFFICE OF [illegible]

In re Application of	:	
Takaaki Kato et al	:	
Application No. 29/205,571	:	NOTICE
Filed: May 18, 2004	:	
Attorney Docket No. 042411	:	

This is a notice regarding your request for acceptance of a fee deficiency submission under 37 CFR 1.28. On September 1, 1998, the Court of Appeals for the Federal Circuit held that 37 CFR 1.28(c) is the sole provision governing the time for correction of the erroneous payment of the issue fee as a small entity. **See DH Technology v. Synergystex International, Inc. 154 F.3d 1333, 47 USPQ2d 1865 (Fed. Cir. Sept. 1, 1998).**

The Office no longer investigates or rejects original or reissue applications under 37 CFR 1.56. **1098 Off. Gaz. Pat. Office 502 (January 3, 1989).** Therefore, nothing in this Notice is intended to imply that an investigation was done.

Your fee deficiency submission under 37 CFR 1.28 is hereby **ACCEPTED.**

Inquiries related to this communication should be directed to Wan Laymon at (571) 272-3220.

This matter is being referred to Technology Center AU 2911.

Wan Laymon
Wan Laymon
Petitions Examiner
Office of Petitions
Office of the Deputy Commissioner
for Patent Examination Policy

UNITED STATES PATENT AND TRADEMARK OFFICE

Commissioner for Patents
United States Patent and Trademark Office
P.O. Box 1450
Alexandria, VA 22313-1450
www.uspto.gov

AUG 04 2004

TRASK BRITT
P.O. BOX 2550
SALT LAKE CITY UT 84110

In re Application of	:	
Susan Diane Cessor	:	
Serial No.: 29/205,668	:	DECISION ON PETITION
Filed: May 19, 2004	:	
For: Side Element of a Shoe Upper	:	

This is in response to the petition applicant filed on May 19, 2004, to make the above-identified application special under the provisions of 37 CFR 1.102(d).

Applicant has satisfied the provisions set forth in M.P.E.P. 708.02, VIII, thus the petition is **GRANTED**.

The application will be forwarded to the examiner for action on the merits commensurate with this decision.

Should there be any questions with regard to this letter please contact John Kittle by letter addressed to the Director, Technology Center 3700/2900, P.O. Box 1450 Alexandria, VA 22313-1450, or by telephone at (703) 308-0873 or by facsimile transmission at (703) 308-3139.

John E. Kittle

John E. Kittle
Director
Technology Center 3700/2900

UNITED STATES PATENT AND TRADEMARK OFFICE

Commissioner for Patents
United States Patent and Trademark Office
P.O. Box 1450
Alexandria, VA 22313-1450
www.uspto.gov
DIW Mar-07

FROSS, ZELNICK, LEHRMAN & ZISSU, PC
866 UNITED NATIONS PLAZA
NEW YORK NY 10017

COPY MAILED

MAR 27 2007

OFFICE OF PETITIONS

In re Patent No. D501,075	:	
Issued: 01/25/2005	:	
Application No. 29/205695	:	ON PETITION
Filed: 05/18/2004	:	
Atty. Docket No.: JCHO USA PA-0416638	:	

This is in response to the deficiency fee payment filed pursuant to 37 CFR 1.28(c) on 18 August, 2006.

37 CFR 1.28(c) states, "The deficiency is based on the amount of the fee, for other than a small entity, in effect at the time the deficiency is paid in full."

The Office no longer investigates or rejects original or reissue applications under 37 CFR 1.56. **1098 Off. Gaz. Pat. Office 502 (January 3, 1989)**. Therefore, nothing in this Notice is intended to imply that an investigation was done.

Your fee deficiency submission under 37 CFR 1.28 is hereby **ACCEPTED**.

Small entity status will no longer apply.

Telephone inquiries should be directed to the undersigned at (571) 272-3231.

D Wood

Douglas I. Wood
Senior Petitions Attorney
Office of Petitions

UNITED STATES PATENT AND TRADEMARK OFFICE

Commissioner for Patents
United States Patent and Trademark Office
P.O. Box 1450
Alexandria, VA 22313-1450
www.uspto.gov

FROSS, ZELNICK, LEHRMAN & ZISSU, PC
866 UNITED NATIONS PLAZA
NEW YORK NY 10017

COPY MAILED

MAR 2 8 2007

OFFICE OF PETITIONS

In re Patent No. D521,220 :
Issued: May 23, 2006 :
Application No. 29/205,696 : ON PETITION
Filed: May 18, 2004 :
Attorney Docket No: **JCHO 0416639** :

This is a decision regarding your request for acceptance of a fee deficiency submission and loss of small entity status filed August 18, 2006, under 37 CFR 1.28.

On September 1, 1998, the Court of Appeals for the Federal Circuit held that 37 CFR 1.28(c) is the sole provision governing the time for correction of the erroneous payment of the issue fee as a small entity. See DH Technology v. Synergystex International, Inc.. 154 F.33d 1333, 47 USPQ2d 1865 (Fed. Cir. Sept. 1, 1998).

The Office no longer investigates or rejects original or reissue applications under 37 CFR 1.56. 1098 Off. Gaz. Pat. Office 502 (January 3, 1989). Therefore nothing in this Notice is intended to imply that an investigation was done.

Your fee deficiency submission under 37 CFR 1.28 is hereby accepted and the petition is **GRANTED**. Status as a small entity has also been removed.

Inquiries related to this communication should be directed to the Office of Petitions Staff at (571) 272-3282.

Patricia Faison-Ball

Patricia Faison-Ball
Senior Petitions Attorney
Office of Petitions

UNITED STATES PATENT AND TRADEMARK OFFICE

Commissioner for Patents
United States Patent and Trademark Office
P.O. Box 1450
Alexandria, VA 22313-1450
www.uspto.gov

KENYON & KENYON
ONE BROADWAY
NEW YORK, NY 10004

COPY MAILED

JUN 13 2005

OFFICE OF PETITIONS

In re Application of	:	
William B. Kenyon	:	
Application No. 29/205,699	:	ON PETITION
Filed: May 18, 2004	:	
Attorney Docket No. 36559/195	:	

This is a decision on the petition, filed June 10, 2005, under 37 CFR 1.313(c)(3) to withdraw the above-identified application from issue after payment of the issue fee.

The petition is **GRANTED**.

The above-identified application is hereby withdrawn from issue in favor of a continued prosecution application (CPA) under 37 CFR 1.53(d).

Petitioner is advised that the issue fee paid on February 22, 2005 in the parent application is not refundable nor can it be applied towards any new Notice of Allowance which may issue on the CPA filed June 10, 2005.

Telephone inquiries should be directed to the undersigned at (571) 272-3220.

This matter is being referred to Technology Center AU 2912 for processing of the CPA.

Wan Laymon
Wan Laymon
Petitions Examiner
Office of Petitions
Office of the Deputy Commissioner
for Patent Examination Policy

UNITED STATES PATENT AND TRADEMARK OFFICE

COMMISSIONER FOR PATENTS
UNITED STATES PATENT AND TRADEMARK OFFICE
P.O. BOX 1450
ALEXANDRIA, VA 22313-1450

www.uspto.gov

Date : June 13, 2005

TO : Director, Office of Patent Publication

FROM : Office of the Deputy Commissioner
for Patent Examination Policy

SUBJECT : Withdrawal from Issue of

Applicant(s) : William B. Kenyon
Application No. : 29/205,699
Filed : May 18, 2004

The above-identified application has been assigned Patent No. D506,144 and an issue date of June 14, 2005.

It is hereby directed that this application be withdrawn from issue at the request of the applicant. Do not refund the issue fee.

The following erratum should be published in the Official Gazette if the above-identified application is published in the OG of June 14, 2005:

"All reference to Patent No. D506,144 to William B. Kenyon of Sturbridge, MA for CONTAINER appearing in the Official Gazette of June 14, 2005 should be deleted since no patent was granted."

Wan Laymon
Petitions Examiner
Office of Petitions
Office of the Deputy Commissioner
for Patent Examination Policy

cc: Paul Harrison; Crystal Park 3, Suite 441 (FAX-703-306-2737)
Deneise Boyd, Crystal Park 2, Suite 1100 (FAX-308-5413)
Mary Louise McAskill, Crystal Park 3-910 (FAX 305-4372)
Niomi Farmer, Crystal Park 3-910 (FAX-305-4372)
Mary E. Johnson (Cookie), P/OCS, CM1-6D07
Duane Davis (CDS), CM1-6A07
Tamara K. Greene, PK3-910

UNITED STATES PATENT AND TRADEMARK OFFICE

Commissioner for Patents
United States Patent and Trademark Office
P.O. Box 1450
Alexandria, VA 22313-1450
www.uspto.gov

Fross, Zelnick, Lehrman & Zissu, PC
866 United Nations Plaza
New York, NY 10017

COPY MAILED
NOV 24 2006
OFFICE OF PETITIONS

In re Application of	:	
Sandra Choi	:	
Application No. 29/205712	:	
Filing or 371(c) Date: 05/18/2004	:	ON PETITION
Patent No. D515798	:	
Issue Date: 02/28/2006	:	
For: SHOE	:	

This is a notice regarding request for acceptance of a fee deficiency submission under 37 CFR 1.28. On September 1, 1998, the Court of Appeals for the Federal Circuit held that 37 CFR 1.28(c) is the sole provision governing the time for correction of the erroneous payment of the issue fee as a small entity. **See DH Technology v. Synergystex International, Inc. 154 F.3d 1333, 47 USPQ2d 1865 (Fed. Cir. Sept. 1, 1998).**

The Office no longer investigates or rejects original or reissue applications under 37 CFR 1.56. **1098 Off. Gaz. Pat. Office 502 (January 3, 1989)**. Therefore, nothing in this Notice is intended to imply that an investigation was done.

Your fee deficiency submission under 37 CFR 1.28 is hereby **ACCEPTED**.

This application is no longer entitled to small entity status. Accordingly, all future fees paid in this application must be paid at the large entity rate.

Telephone inquiries concerning this matter should be directed to the undersigned at (571) 272-3232.

Derek L. Woods
Attorney
Office of Petitions

UNITED STATES PATENT AND TRADEMARK OFFICE

Commissioner for Patents
United States Patent and Trademark Office
P.O. Box 1450
Alexandria, VA 22313-1450
www.uspto.gov

Fross, Zelnick, Lehrman & Zissu, PC
866 United Nations Plaza
New York NY 10017

COPY MAILED
JAN 0 8 2007
OFFICE OF PETITIONS

In re Patent No. D517,793	:	
Issue Date: March 28, 2006	:	
Application No. 29/205,713	:	NOTICE
Filed: May 18, 2004	:	
Attorney Docket No. JCHO 0416433	:	

This is a notice regarding your request for acceptance of a fee deficiency submission under 37 CFR 1.28. On September 1, 1998, the Court of Appeals for the Federal Circuit held that 37 CFR 1.28(c) is the sole provision governing the time for correction of the erroneous payment of the issue fee as a small entity. **See DH Technology v. Synergystex International, Inc. 154 F.3d 1333, 47 USPQ2d 1865 (Fed. Cir. Sept. 1, 1998).**

The Office no longer investigates or rejects original or reissue applications under 37 CFR 1.56. **1098 Off. Gaz. Pat. Office 502 (January 3, 1989)**. Therefore, nothing in this Notice is intended to imply that an investigation was done.

Your fee deficiency submission under 37 CFR 1.28 is hereby **ACCEPTED**.

This application is no longer entitled to small entity status. Accordingly, all future fees paid in this application must be paid at the large entity rate.

Inquiries related to this communication should be directed to the undersigned at (571) 272-3230.

Shirene Willis Brantley

Shirene Willis Brantley
Senior Petitions Attorney
Office of Petitions

UNITED STATES PATENT AND TRADEMARK OFFICE

Commissioner for Patents
United States Patent and Trademark Office
P.O. Box 1450
Alexandria, VA 22313-1450
www.uspto.gov

Fross, Zelnick, Lehrman & Zissu, PC
866 United Nations Plaza
New York NY 10017

COPY MAILED
JAN 0 8 2007
OFFICE OF PETITIONS

In re Patent No. D515,789	:	
Issue Date: February 28, 2006	:	
Application No. 29/205,714	:	NOTICE
Filed: May 18, 2004	:	
Attorney Docket No. JCHO 0416036	:	

This is a notice regarding your request for acceptance of a fee deficiency submission under 37 CFR 1.28. On September 1, 1998, the Court of Appeals for the Federal Circuit held that 37 CFR 1.28(c) is the sole provision governing the time for correction of the erroneous payment of the issue fee as a small entity. **See DH Technology v. Synergystex International, Inc. 154 F.3d 1333, 47 USPQ2d 1865 (Fed. Cir. Sept. 1, 1998).**

The Office no longer investigates or rejects original or reissue applications under 37 CFR 1.56. **1098 Off. Gaz. Pat. Office 502 (January 3, 1989)**. Therefore, nothing in this Notice is intended to imply that an investigation was done.

Your fee deficiency submission under 37 CFR 1.28 is hereby **ACCEPTED**.

This application is no longer entitled to small entity status. Accordingly, all future fees paid in this application must be paid at the large entity rate.

Inquiries related to this communication should be directed to the undersigned at (571) 272-3230.

Shirene Willis Brantley
Senior Petitions Attorney
Office of Petitions

UNITED STATES PATENT AND TRADEMARK OFFICE

Commissioner for Patents
United States Patent and Trademark Office
P.O. Box 1450
Alexandria, VA 22313-1450
www.uspto.gov
DIW Mar-07

FROSS, ZELNICK, LEHRMAN & ZISSU, PC
866 UNITED NATIONS PLAZA
NEW YORK NY 10017

COPY MAILED

MAR 2 6 2007

OFFICE OF PETITIONS

In re Patent No. D513845	:	
Issued: 01/31/2006	:	
Application No. 29/205715	:	ON PETITION
Filed: 05/18/2004	:	
Attorney Docket Number: JCHO	:	
USA PA-0416567	:	

This is in response to the deficiency fee payment filed pursuant to 37 CFR 1.28(c) on 18 August, 2006.

37 CFR 1.28(c) states, "The deficiency is based on the amount of the fee, for other than a small entity, in effect at the time the deficiency is paid in full."

The Office no longer investigates or rejects original or reissue applications under 37 CFR 1.56. **1098 Off. Gaz. Pat. Office 502 (January 3, 1989)**. Therefore, nothing in this Notice is intended to imply that an investigation was done.

Your fee deficiency submission under 37 CFR 1.28 is hereby **ACCEPTED**.

Small entity status will no longer apply.

Telephone inquiries should be directed to the undersigned at (571) 272-3231.

DWood

Douglas I. Wood
Senior Petitions Attorney
Office of Petitions

UNITED STATES PATENT AND TRADEMARK OFFICE

Commissioner for Patents
United States Patent and Trademark Office
P.O. Box 1450
Alexandria, VA 22313-1450
www.uspto.gov
DIW Mar-07

FROSS, ZELNICK, LEHRMAN & ZISSU, PC
866 UNITED NATIONS PLAZA
NEW YORK NY 10017

COPY MAILED

MAR 2 6 2007

OFFICE OF PETITIONS

In re Patent No. D521221	:	
Issued: 05/23/2006	:	
Application No. 29/205716	:	ON PETITION
Filed: 05/18/2004	:	
Attorney Docket Number: JCHO	:	
USA PA-0416039	:	

This is in response to the deficiency fee payment filed pursuant to 37 CFR 1.28(c) on 18 August, 2006.

37 CFR 1.28(c) states, "The deficiency is based on the amount of the fee, for other than a small entity, in effect at the time the deficiency is paid in full."

The Office no longer investigates or rejects original or reissue applications under 37 CFR 1.56. **1098 Off. Gaz. Pat. Office 502 (January 3, 1989)**. Therefore, nothing in this Notice is intended to imply that an investigation was done.

Your fee deficiency submission under 37 CFR 1.28 is hereby **ACCEPTED**.

Small entity status will no longer apply.

The file is being forwarded to Files Repository.

Telephone inquiries should be directed to the undersigned at (571) 272-3231.

D Wood

Douglas I. Wood
Senior Petitions Attorney
Office of Petitions

UNITED STATES PATENT AND TRADEMARK OFFICE

Commissioner for Patents
United States Patent and Trademark Office
P.O. Box 1450
Alexandria, VA 22313-1450
www.uspto.gov
DIW Mar-07

FROSS, ZELNICK, LEHRMAN & ZISSU, PC
866 UNITED NATIONS PLAZA
NEW YORK NY 10017

COPY MAILED

MAR 2 6 2007

OFFICE OF PETITIONS

In re Patent No. D525415	:	
Issued: 07/25/2006	:	
Application No. 29/205718	:	ON PETITION
Filed: 05/18/2004	:	
Atty. Docket No.: JCHO USA PA-0416437	:	

This is in response to the deficiency fee payment filed pursuant to 37 CFR 1.28(c) on 18 August, 2006.

37 CFR 1.28(c) states, "The deficiency is based on the amount of the fee, for other than a small entity, in effect at the time the deficiency is paid in full."

The Office no longer investigates or rejects original or reissue applications under 37 CFR 1.56. **1098 Off. Gaz. Pat. Office 502 (January 3, 1989)**. Therefore, nothing in this Notice is intended to imply that an investigation was done.

Your fee deficiency submission under 37 CFR 1.28 is hereby **ACCEPTED**.

Small entity status will no longer apply.

Telephone inquiries should be directed to the undersigned at (571) 272-3231.

D Wood

Douglas I. Wood
Senior Petitions Attorney
Office of Petitions

UNITED STATES PATENT AND TRADEMARK OFFICE

Commissioner for Patents
United States Patent and Trademark Office
P.O. Box 1450
Alexandria, VA 22313-1450
www.uspto.gov

Dennis D. Sammons
Church Chair Industries, Inc.
7007 New Calhoun Hwy. NE
Rome GA 30161

COPY MAILED

FEB 15 2007

OFFICE OF PETITIONS

In re Application of
Sammons
Application No. 29/205,719
Filed: May 19, 2004
Attorney Docket No. Sammons - Church Chair
For: EMBRACE STACKER (METAL FRAME CHAIR NAME) SAXON (WOOD FRAME CHAIR NAME)

ON PETITION

This is a decision on the petition under 37 CFR 1.181, filed October 14, 2006, to withdraw the holding of abandonment.

The petition is **dismissed**.

Any further petition to revive the above-identified application must be submitted within TWO (2) MONTHS from the mail date of this decision. Extensions of time under 37 CFR 1.136(a) are permitted. The reconsideration request should include a cover letter entitled "Petition under 37 CFR 1.137(a)." This is **not** final agency action within the meaning of 5 U.S.C. § 704.

The above-identified application became abandoned for failure to timely reply to the February 10, 2006 non-final Office action, which set a three month extendable period for reply. Applicant filed a reply on May 12, 2006, which was after the three month period for response. On May 19, 2006, Ruth Sydnor, a LIE in TC 2900, mailed a notice informing application that an extension of time was required. The communication referenced an enclosed fee sheet. It is noted that the official file for this application does not include a copy of the fee sheet mailed with the May 19, 2006 communication. On May 24, 2006, applicant mailed a check for $55.00 for a one month extension of time to the Office. However, on May 24, 2006, the small entity fee for a one month extension of time was $60.00. Accordingly, the Office contended that this application became abandoned on May 11, 2006. A Notice of Abandonment was mailed on October 3, 2006. The present petition was promptly filed on October 14, 2006.

Petitioner requests withdrawal of the holding of abandonment because petitioner followed the fee schedule allegedly enclosed in the May 19, 2006 Office communication. Petitioner states that it is not his fault that a (purportedly) incorrect fee schedule was sent.

As explained in MPEP 710.02(e), where a reply is filed after the set period for reply has expired and no petition or fee accompanies it, the reply will not be accepted as timely filed until the petition and the appropriate fee are submitted. It is noted that extension of time fees are statutory, and therefore, cannot be waived.

The payment of the full extension of time fee is statutorily required in order to avoid abandonment, if a response is filed after the set period for response has expired. Applicant did not submit the full $60.00 extension of time. Therefore, the application **did** go abandoned.

Applicant is reminded that the application became abandoned for failure to properly respond to the February 10, 2006 non-final Office action. The Office was not obligated to mail the May 19, 2006 communication and it did **not** set a new period for response.

An applicant is responsible for timely and properly replying to Office communications. It is applicant's responsibility to timely and fully respond. The Office attempts to inform applicants of defective responses, but it is under no obligation to do so.

Nevertheless, based on the above facts, petitioner is encouraged to file a petition to revive under the unavoidable standard of 37 CFR 1.137(a). The current Rule 137(a) petition fee is $250.00. A terminal disclaimer with a fee of $65.00 must accompany the petition, because this is a design application. Applicable blank forms are enclosed.

Further correspondence with respect to this matter should be addressed as follows:

By mail:

Mail Stop PETITION
Commissioner for Patents
Post Office Box 1450
Alexandria, VA 22313-1450

By hand:

U.S. Patent and Trademark Office
Customer Service Window, Mail Stop Petition
Randolph Building
401 Dulany Street
Alexandria, VA 22314

By FAX:

(571) 273-8300 - ATTN: Office of Petitions

Telephone inquiries pertaining to this decision may be directed to the undersigned at (571) 272-3230.

Shirene Willis Brantley
Senior Petitions Attorney
Office of Petitions

Enclosures: Blank PETITION FOR REVIVAL OF AN APPLICATION FOR PATENT ABANDONED UNAVOIDABLY UNDER 37 CFR 1.137(a)

Blank TERMINAL DISCLAIMER TO ACCOMPANY PETITION

Privacy Act Statement

PTO/SB/61 (09-06)
Approved for use through 03/31/2007. OMB 0651-0031
U.S. Patent and Trademark Office; U.S. DEPARTMENT OF COMMERCE
Under the Paperwork Reduction Act of 1995, no persons are required to respond to a collection of information unless it displays a valid OMB control number.

PETITION FOR REVIVAL OF AN APPLICATION FOR PATENT ABANDONED UNAVOIDABLY UNDER 37 CFR 1.137(a)

Docket Number (Optional)

First Named Inventor:

Art Unit:

Application Number:

Examiner:

Filed:

Title:

Attention: Office of Petitions
Mail Stop Petition
Commissioner for Patents
P.O. Box 1450
Alexandria, VA 22313-1450

NOTE: If information or assistance is needed in completing this form, please contact Petitions Information at (571) 272-3282.

The above-identified application became abandoned for failure to file a timely and proper reply to a notice or action by the United States Patent and Trademark Office. The date of abandonment is the day after the expiration date of the period set for reply in the Office notice or action plus any extensions of time actually obtained.

APPLICANT HEREBY PETITIONS FOR REVIVAL OF THIS APPLICATION.

NOTE: A grantable petition requires the following items:

(1) Petition fee.
(2) Reply and/or issue fee.
(3) Terminal disclaimer with disclaimer fee – required for all utility and plant applications filed before June 8, 1995, and for all design applications; and
(4) Adequate showing of the cause of unavoidable delay.

1. Petition fee

☐ Small entity – fee $_____ (37 CFR 1.17(l)). Applicant claims small entity status. See 37 CFR 1.27.

☐ Other than small entity – fee $_____ (37 CFR 1.17(l)).

2. Reply and/or fee

A The reply and/or fee to the above-noted Office action in the form of _____ (identify the type of reply):

☐ has been filed previously on _____ .

☐ is enclosed herewith.

B The issue fee of $ _____

☐ has been filed previously on _____ .

☐ is enclosed herewith.

This collection of information is required by 37 CFR 1.137(a). The information is required to obtain or retain a benefit by the public which is to file (and by the USPTO to process) an application. Confidentiality is governed by 35 U.S.C. 122 and 37 CFR 1.11 and 1.14. This collection is estimated to take 8 hours to complete, including gathering, preparing, and submitting the completed application form to the USPTO. Time will vary depending upon the individual case. Any comments on the amount of time you require to complete this form and/or suggestions for reducing this burden, should be sent to the Chief Information Officer, U.S. Patent and Trademark Office, U.S. Department of Commerce, P.O. Box 1450, Alexandria, VA 22313-1450. DO NOT SEND FEES OR COMPLETED FORMS TO THIS ADDRESS. **SEND TO: Mail Stop Petition, Commissioner for Patents, P.O. Box 1450, Alexandria, VA 22313-1450.**
If you need assistance in completing the form, call 1-800-PTO-9199 and select option 2.

Under the Paperwork Reduction Act of 1995, no persons are required to respond to a collection of information unless it displays a valid OMB control number.

PETITION FOR REVIVAL OF AN APPLICATION FOR PATENT ABANDONED UNAVOIDABLY UNDER 37 CFR 1.137(a)

3. Terminal disclaimer with disclaimer fee

☐ Since this utility/plant application was filed on or after June 8, 1995, no terminal disclaimer is required.

☐ A terminal disclaimer (and disclaimer fee (37 CFR 1.20(d)) of $ _____ for a small entity or $ _____ for other than a small entity) disclaiming the required period of time is enclosed herewith (see PTO/SB/63).

4. An adequate showing of the cause of the delay, and that the entire delay in filing the required reply from the due date for the reply until the filing of a grantable petition under 37 CFR 1.137(a) was unavoidable, is enclosed.

WARNING:

Petitioner/applicant is cautioned to avoid submitting personal information in documents filed in a patent application that may contribute to identity theft. Personal information such as social security numbers, bank account numbers, or credit card numbers (other than a check or credit card authorization form PTO-2038 submitted for payment purposes) is never required by the USPTO to support a petition or an application. If this type of personal information is included in documents submitted to the USPTO, petitioners/applicants should consider redacting such personal information from the documents before submitting them to the USPTO. Petitioner/applicant is advised that the record of a patent application is available to the public after publication of the application (unless a non-publication request in compliance with 37 CFR 1.213(a) is made in the application) or issuance of a patent. Furthermore, the record from an abandoned application may also be available to the public if the application is referenced in a published application or an issued patent (see 37 CFR 1.14). Checks and credit card authorization forms PTO-2038 submitted for payment purposes are not retained in the application file and therefore are not publicly available.

Signature	Date
Typed or printed name	Registration Number, if applicable
Address	Telephone Number
Address	

Enclosure
☐ Fee Payment
☐ Reply
☐ Terminal Disclaimer Form
☐ Additional sheets containing statements establishing unavoidable delay
☐ _____

CERTIFICATE OF MAILING OR TRANSMISSION (37 CFR 1.8(a))

I hereby certify that this correspondence is being:

☐ deposited with the United States Postal Service on the date shown below with sufficient postage as first class mail in an envelope addressed to **Mail Stop Petition**, Commissioner for Patents, P.O. Box 1450, Alexandria, VA 22313-1450.

☐ transmitted by facsimile on the date shown below to the United States Patent and Trademark Office at (571) 273-8300.

Date	Signature
	Typed or printed name of person signing certificate

Under the Paperwork Reduction Act of 1995, no persons are required to respond to a collection of information unless it displays a valid OMB control number.

PETITION FOR REVIVAL OF AN APPLICATION FOR PATENT ABANDONED UNAVOIDABLY UNDER 37 CFR 1.137(a)

NOTE: The following showing of the cause of unavoidable delay must be signed by all applicants or by any other party who is presenting statements concerning the cause of delay.

Signature	Date
Typed or printed name	Registration Number, if applicable

(In the space provided below, please explain in detail the reasons for the delay in filing a proper reply.)

(Please attach additional sheets if additional space is needed.)

PTO/SB/63 (09-06)
Approved for use through 03/31/2007. OMB 0651-0031
U.S. Patent and Trademark Office; U.S. DEPARTMENT OF COMMERCE
Under the Paperwork Reduction Act of 1995, no persons are required to a collection of information unless it displays a valid OMB control number.

TERMINAL DISCLAIMER TO ACCOMPANY PETITION

Docket Number (Optional)

In re Application of:

Name:

Application Number:

Filed:

For:

The owner*, _____ of _____ percent interest in the above-identified application hereby disclaims a terminal part of the term of any patent granted the above-identified application equivalent to: (1) if the above-identified application is a design application, the period of abandonment of the above-identified application, and (2) if the above-identified application is a utility or plant application, the lesser of: (a) the period of abandonment of the application; or (b) the period extending beyond twenty years from the date on which the above-identified application was filed in the United States or, if the application contains a specific reference to an earlier filed application(s) under 35 U.S.C. 120, 121, or 365(c), from the date on which the earliest such application was filed. This disclaimer also applies to any patent granted on a utility or plant application filed before June 8, 1995, or a design application, that contains a specific reference under 35 U.S.C. 120, 121, or 365(c) to the above-identified application. This disclaimer is binding upon the grantee, and its successors or assigns.

Check either box 1 or 2 below, if appropriate.

1. ☐ For submissions on behalf of an organization (e.g., corporation, partnership, university, government agency, etc.), the undersigned is empowered to act on behalf of the organization.
2. ☐ The undersigned is an attorney or agent of record. Registration Number_____.

Signature	Date
Typed or Printed Name	Telephone Number

☐ Terminal disclaimer fee under 37 CFR 1.20(d) included.

WARNING: Information on this form may become public. Credit card information should not be included on this form. Provide credit card information and authorization on PTO-2038.

* Statement under 37 CFR 3.73(b) is required if terminal disclaimer is signed by the assignee (owner). Form PTO/SB/96 may be used for making this certification. See MPEP § 324.

This collection of information is required by 37 CFR 1.137. The information is required to obtain or retain a benefit by the public which is to file (and by the USPTO to process) an application. Confidentiality is governed by 35 U.S.C. 122 and 37 CFR 1.11 and 1.14. This collection is estimated to take 12 minutes to complete, including gathering, preparing, and submitting the completed application form to the USPTO. Time will vary depending upon the individual case. Any comments on the amount of time you require to complete this form and/or suggestions for reducing this burden, should be sent to the Chief Information Officer, U.S. Patent and Trademark Office, U.S. Department of Commerce, P.O. Box 1450, Alexandria, VA 22313-1450. DO NOT SEND FEES OR COMPLETED FORMS TO THIS ADDRESS. **SEND TO: Commissioner for Patents, P.O. Box 1450, Alexandria, VA 22313-1450.**

If you need assistance in completing the form, call 1-800-PTO-9199 and select option 2.

Privacy Act Statement

The **Privacy Act of 1974 (P.L. 93-579)** requires that you be given certain information in connection with your submission of the attached form related to a patent application or patent. Accordingly, pursuant to the requirements of the Act, please be advised that: (1) the general authority for the collection of this information is 35 U.S.C. 2(b)(2); (2) furnishing of the information solicited is voluntary; and (3) the principal purpose for which the information is used by the U.S. Patent and Trademark Office is to process and/or examine your submission related to a patent application or patent. If you do not furnish the requested information, the U.S. Patent and Trademark Office may not be able to process and/or examine your submission, which may result in termination of proceedings or abandonment of the application or expiration of the patent.

The information provided by you in this form will be subject to the following routine uses:

1. The information on this form will be treated confidentially to the extent allowed under the Freedom of Information Act (5 U.S.C. 552) and the Privacy Act (5 U.S.C 552a). Records from this system of records may be disclosed to the Department of Justice to determine whether disclosure of these records is required by the Freedom of Information Act.
2. A record from this system of records may be disclosed, as a routine use, in the course of presenting evidence to a court, magistrate, or administrative tribunal, including disclosures to opposing counsel in the course of settlement negotiations.
3. A record in this system of records may be disclosed, as a routine use, to a Member of Congress submitting a request involving an individual, to whom the record pertains, when the individual has requested assistance from the Member with respect to the subject matter of the record.
4. A record in this system of records may be disclosed, as a routine use, to a contractor of the Agency having need for the information in order to perform a contract. Recipients of information shall be required to comply with the requirements of the Privacy Act of 1974, as amended, pursuant to 5 U.S.C. 552a(m).
5. A record related to an International Application filed under the Patent Cooperation Treaty in this system of records may be disclosed, as a routine use, to the International Bureau of the World Intellectual Property Organization, pursuant to the Patent Cooperation Treaty.
6. A record in this system of records may be disclosed, as a routine use, to another federal agency for purposes of National Security review (35 U.S.C. 181) and for review pursuant to the Atomic Energy Act (42 U.S.C. 218(c)).
7. A record from this system of records may be disclosed, as a routine use, to the Administrator, General Services, or his/her designee, during an inspection of records conducted by GSA as part of that agency's responsibility to recommend improvements in records management practices and programs, under authority of 44 U.S.C. 2904 and 2906. Such disclosure shall be made in accordance with the GSA regulations governing inspection of records for this purpose, and any other relevant (*i.e.*, GSA or Commerce) directive. Such disclosure shall not be used to make determinations about individuals.
8. A record from this system of records may be disclosed, as a routine use, to the public after either publication of the application pursuant to 35 U.S.C. 122(b) or issuance of a patent pursuant to 35 U.S.C. 151. Further, a record may be disclosed, subject to the limitations of 37 CFR 1.14, as a routine use, to the public if the record was filed in an application which became abandoned or in which the proceedings were terminated and which application is referenced by either a published application, an application open to public inspection or an issued patent.
9. A record from this system of records may be disclosed, as a routine use, to a Federal, State, or local law enforcement agency, if the USPTO becomes aware of a violation or potential violation of law or regulation.

UNITED STATES PATENT AND TRADEMARK OFFICE

Commissioner for Patents
United States Patent and Trademark Office
P.O. Box 1450
Alexandria, VA 22313-1450
www.uspto.gov

Dennis D. Sammons
Church Chair Industries, Inc.
7007 New Calhoun Hwy. NE
Rome GA 30161

COPY MAILED

MAY 04 2007

OFFICE OF PETITIONS

In re Application of :
Sammons :
Application No. 29/205,719 : ON PETITION
Filed: May 19, 2004 :
Attorney Docket No. Sammons - Church Chair :
For: EMBRACE STACKER (METAL FRAME CHAIR NAME) SAXON (WOOD FRAME CHAIR NAME)

This is a decision on the petition under 37 CFR 1.137(a), filed April 10, 2007, to revive the above-identified application.

The above-identified application became abandoned for failure to timely reply to the February 10, 2006 non-final Office action, which set a three month extendable period for reply. Applicant filed a reply on May 12, 2006, which was after the three month period for response. On May 19, 2006, Ruth Snydor, a LIE in TC 2900, mailed a notice informing application that an extension of time was required. The communication referenced an enclosed fee sheet. It is noted that the official file for this application does not include a copy of the fee sheet mailed with the May 19, 2006 communication. On May 24, 2006, applicant mailed a check for $55.00 for a one month extension of time to the Office. However, on May 24, 2006, the small entity fee for a one month extension of time was $60.00. Accordingly, the Office contended that this application became abandoned on May 11, 2006. A Notice of Abandonment was mailed on October 3, 2006.

Applicant has submitted an amendment in reply to the February 10, 2006 non-final Office action, an acceptable showing of the unavoidable nature of the delay in responding to the February 10, 2006 non-final Office action, the petition fee, and an acceptable terminal disclaimer.

The petition under 37 CFR 1.137(a) is **granted**.

After the mailing of this decision the application will be forwarded to Technology Center AU 2915 for consideration of the amendment filed on May 12, 2006.

Telephone inquiries pertaining to this decision may be directed to the undersigned at (571) 272-3230.

Shirene Willis Brantley
Senior Petitions Attorney
Office of Petitions

UNITED STATES PATENT AND TRADEMARK OFFICE

Commissioner for Patents
United States Patent and Trademark Office
P.O. Box 1450
Alexandria, VA 22313-1450
www.uspto.gov

Raymond Sun
12420 Woodhall Way
Tustin CA 92782

COPY MAILED

SEP 15 2004

OFFICE OF PETITIONS

In re Application of :
Lin :
Application No. 29/205,731 : DECISION GRANTING PETITION
Filed: May 18, 2004 :
Attorney Docket No. PAT-1574 :

This is a decision on the petition under 37 CFR 1.53, filed August 20, 2004, requesting that the above-identified application be accorded a filing date of May 18, 2004, with Figure 7 described in the specification as part of the original disclosure.

On May 18, 2004, applicant filed the above-identified application. On August 4, 2004, the Office mailed a Notice of Omitted Item(s) in a Nonprovisional Application, stating that the application had been accorded a filing date of May 18, 2004, and advising applicant that Figure 7 appeared to have been omitted.

In response, on August 20, 2004, applicant filed the present petition and a copy of applicant's postcard receipt, acknowledging receipt of "Drawings - Figs. 1-7, 4 sheets, formal" on May 18, 2004. Additionally, applicant submitted 4 sheets of drawings, which included Figure 7 with the present petition.

Upon review of the record, Figure 7, deposited on May 18, 2004, has not been located among the application papers. However, the evidence is convincing that the application papers deposited on May 18, 2004, included Figure 7, which was subsequently misplaced in the United States Patent and Trademark Office. Therefore, the application, including Figure 7, was complete on filing and will be granted a filing date of May 18, 2004.

Accordingly, the petition is granted and the application will be accorded a filing date of May 18, 2004, with Figure 7 as part of the original disclosure.

The requirement for the submission of omitted drawing Figure 7 was sent in error and is hereby vacated. In view of the above,

the $130.00 petition fee submitted is unnecessary and, as such, is refundable. Applicant may request a refund of the $130.00 petition fee by writing to the following address:

Mail Stop 16
Director of the US Patent and Trademark Office
PO Box 1450
Alexandria, VA 22313-1450

A copy of this decision should accompany applicant's request.

The Office of Initial Patent Examination is directed to process the application with a filing date of May 18, 2004, using Figures 1-6 filed on that date and Figure 7 filed with the present petition.

Any inquiries related to this decision should be directed to the undersigned at (703) 306-5589.

Christina Tartera Donnell

Christina Tartera Donnell
Senior Petitions Attorney
Office of Petitions

SCAN! **Please forward case and paper to address shown below.**

SPE RESPONSE FOR CERTIFICATE OF CORRECTION

Paper No.: _____

DATE : 1/3/08

TO SPE OF : ART UNIT 2916 Ian Simmons (spe)

SUBJECT : Request for Certificate of Correction for Appl. No.: 29/265737 Patent No.: D530007

Please respond to this request for a certificate of correction within 7 days.

Please review the requested changes/corrections as shown in the attached certificate of correction. Please complete this form (see below) and forward it with the file to:

Certificates of Correction Branch (CofC)
South Tower - 9A22
Palm Location 7580

HENRY RANDALL
Certificates of Correction Branch
703-308-9390 ext. _____

Thank You For Your Assistance

The request for issuing the above-identified correction(s) is hereby:
Note your decision on the appropriate box.

- [x] Approved — All changes apply.
- [ ] Approved in Part — Specify below which changes do not apply.
- [ ] Denied — State the reasons for denial below.

Comments: _____

IAN SIMMONS
SUPERVISORY PATENT EXAMINER

SPE

2916
Art Unit

OIPE JC37
JAN 2 4 2005
PATENT & TRADEMARK OFFICE

IFW

PTO/SB/83 (09-04)
Approved for use through 11/30/2005. OMB 0651-0035
U.S. Patent and Trademark Office, U.S. DEPARTMENT OF COMMERCE
Under the Paperwork Reduction Act of 1995, no persons are required to respond to a collection of information unless it displays a valid OMB control number.

REQUEST FOR WITHDRAWAL AS ATTORNEY OR AGENT AND CHANGE OF CORRESPONDENCE ADDRESS

Application Number	29/205,752
Filing Date	May 20, 2004
First Named Inventor	Christopher Harrell
Art Unit	2913
Examiner Name	
Attorney Docket Number	11426-03211

Approved 7/19/05
JMstone
Jacqueline M. Stone, Director
Technology Center 1700

To: Commissioner for Patents
P.O. Box 1450
Alexandria, VA 22313-1450

Please withdraw me as attorney or agent for the above identified patent application, and

- [x] all the attorneys/agents of record.
- [ ] the attorneys/agents (with registration numbers) listed on the attached paper(s), or
- [x] the attorneys/agents associated with Customer Number 22914

NOTE: This box can only be checked when the power of attorney of record in the application is to all the practitioners associated with a customer number.

The reasons for this request are:

CORRESPONDENCE ADDRESS

1. [ ] The correspondence address is NOT affected by this withdrawal.
2. [x] Change the correspondence address and direct all future correspondence to:

[ ] The address associated with Customer Number:

OR

[x] Firm or Individual Name	Christopher Harrell				
Address	2333 NW 15th Street				
City	Fort Lauderdale	State	FL	Zip	33311
Country	U.S.A.				
Telephone	(954) 288-0788			Fax	N/A

Signature		Registration No.	38,417
Name	Daniel C. Crilly	Telephone No.	(954) 522-2200
Date	January 21, 2005		

NOTE: Withdrawal is effective when approved rather than when received. Unless there are at least 30 days between approval of withdrawal and the expiration date of a time period for response or possible extension period, the request to withdraw is normally disapproved.

This collection of information is required by 37 CFR 1.36. The information is required to obtain or retain a benefit by the public which is to file (and by the USPTO to process) an application. Confidentiality is governed by 35 U.S.C. 122 and 37 CFR 1.11 and 1.14. This collection is estimated to take 12 minutes to complete, including gathering, preparing, and submitting the completed application form to the USPTO. Time will vary depending upon the individual case. Any comments on the amount of time you require to complete this form and/or suggestions for reducing this burden, should be sent to the Chief Information Officer, U.S. Patent and Trademark Office, U.S. Department of Commerce, P.O. Box 1450, Alexandria, VA 22313-1450. DO NOT SEND FEES OR COMPLETED FORMS TO THIS ADDRESS. SEND TO: **Commissioner for Patents, P.O. Box 1450, Alexandria, VA 22313-1450.**

If you need assistance in completing the form, call 1-800-PTO-9199 and select option 2.

UNITED STATES PATENT AND TRADEMARK OFFICE

COMMISSIONER FOR PATENTS
UNITED STATES PATENT AND TRADEMARK OFFICE
P.O. BOX 1450
ALEXANDRIA, VA 22313-1450
www.uspto.gov

COPY MAILED
OCT 17 2006
OFFICE OF PETITIONS

The Hoover Company
101 East Maple Street
North Canton, OH 44720

In re Application of :
Seon : DECISION ON PETITION
Application No. 29/205,770 :
Filed: May 20, 2004 :
Docket No.: 2727 :

This is a decision on the petition under 37 C.F.R. § 1.137(b), filed July 21, 2006.

This application became abandoned November 10, 2005 for failure to timely submit a proper reply to the Notice of Allowance and the Notice of Allowability mailed August 9, 2005. Notice of Abandonment was mailed January 12, 2006.

The petition is **DISMISSED**.

Any request for reconsideration of this decision must be submitted within **TWO (2) MONTHS** from mail date of this decision. Extensions of time under 37 CFR 1.136(a) are permitted. The reconsideration request should include a cover letter entitled "Renewed Petition under 37 CFR 1.137(b)." This is not a final agency decision.

A grantable petition pursuant to 37 C.F.R. § 1.137(b) must be accompanied by: (1) the required reply to the outstanding Office action or notice, unless previously filed; (2) the petition fee as set forth in 37 C.F.R. § 1.17(m); (3) a statement that the entire delay in filing the required reply from the due date for the reply until the filing of a grantable petition pursuant to 37 C.F.R. § 1.137(b) was unintentional; and (4)any terminal disclaimer (and fee set forth in 37 C.F.R. § 1.20(d)) required pursuant to 37 C.F.R. § 1.137(c).

The instant petition lacks requirement (1) set forth above. There is no indication that corrected drawings as required by the Notice of Allowability have been submitted. Any renewed petition must include a proper reply.

There is no indication that petitioner herein was ever empowered to prosecute the instant application. If petitioner desires to receive future correspondence regarding this application, the appropriate power of attorney documentation must be submitted. A courtesy copy of this decision will be mailed to petitioner. However, all future correspondence will be directed to the address of record until such time as appropriate instructions are received to the contrary.

The requested associate power of attorney submitted with the instant petition has not been entered as it attempts to utilize a customer number to appoint practitioners associated with Customer Number 26,360 without having revoked the power of attorney to JOHN MORRISON, who does not appear to be associated with the customer number. At the present time, Office computer systems do not allow for entry of both a power of attorney to a list of practitioners associated with a Customer Number and a list of practitioners. See, MPEP 403.

Further correspondence with respect to this matter should be addressed as follows:

By mail: **Mail Stop Petition**
Commissioner for Patents
P.O. Box 1450
Alexandria, VA 22313-1450

By facsimile: (571) 273-8300

By hand delivery: U.S. Patent and Trademark Office
Customer Window, **Mail Stop Petition**
Randolph Building
401 Dulany Street
Alexandria, VA 22314

Telephone inquiries concerning this matter may be directed to the undersigned at (571) 272-3205.

Alesia M. Brown
Petitions Attorney
Office of Petitions

CC: Mark L. Weber
RENNER, KENNER, GREIVE, BOBAK, TAYLOR & WEBER
FIRST NATIONAL TOWER FOURTH FLOOR
106 S. MAIN STREET
AKRON, OH 44308

UNITED STATES PATENT AND TRADEMARK OFFICE

Commissioner for Patents
United States Patent and Trademark Office
P.O. Box 1450
Alexandria, VA 22313-1450
www.uspto.gov

COPY MAILED

MAR 05 2007

OFFICE OF PETITIONS

The Hoover Company
101 East Maple Street
North Canton OH 44720

In re Application of
Seon
Application No. 29/205,770
Filed: May 20, 2004
Attorney Docket No. 2727

ON PETITION

This is a decision on the renewed petition under 37 CFR 1.137(b), filed November 20, 2006, to revive the above-identified design application.

The petition is **GRANTED**.

The petition satisfies the requirements of 37 CFR 1.137(b) in that petitioner has supplied (1) the reply in the form of a Continued Prosecution Application (CPA) under 37 CFR 1.53(d); (2) the petition fee; (3) a proper statement of unintentional delay; and (4) a terminal disclaimer and fee as required by 37 CFR 1.137(d).

The terminal disclaimer is accepted and has been made of record.

This application is being revived solely for purposes of continuity. As continuity has been established by this decision, the application is again abandoned in favor of the CPA.

Telephone inquiries concerning this decision should be directed to the undersigned at (571) 272-3205.

This application is being referred to Technology Center 2900 for processing of the CPA.

Alesia M. Brown
Petitions Attorney
Office of Petitions

UNITED STATES PATENT AND TRADEMARK OFFICE

Commissioner for Patents
United States Patent and Trademark Office
P.O. Box 1450
Alexandria, VA 22313-1450
www.uspto.gov

JAMES E. BRUNTON
P.O. BOX 29000
GLENDALE, CA 91209

COPY MAILED

SEP 2 3 2005

OFFICE OF PETITIONS

In re Application of	:	
Theodore Handy	:	
Application No. 29/205,774	:	ON PETITION
Filed: May 19, 2004	:	
Attorney Docket No. 004-15	:	

This is a decision on the petition under 37 CFR 1.137(b), filed September 8, 2005, to revive the above-identified application.

The petition is **GRANTED**.

The above-identified application became abandoned for failure to submit the formal drawings in a timely manner in reply to the Notice of Allowability mailed February 23, 2005, which set a statutory period for reply of three (3) months. Accordingly, the above-identified application became abandoned on May 24, 2005.

The terminal disclaimed filed September 8, 2005 under 37 CFR 1.137(d) has been entered and made of record. Effective September 8, 2000, 37 CFR 1.137(d)(1) has been added to state that a terminal disclaimer filed pursuant to this rule must dedicate to the public a terminal part of the term of any patent granted thereon equivalent to the lesser of: 1) the period of abandonment of the application; or 2) the period extending beyond twenty years from the date on which the application for the patent was filed in the United States, or, if the application contains a specific reference to an earlier filed application(s) under 35 U.S.C. 120, 121 or 365(c), from the date on which the earliest such application was filed. 65 Fed. Reg. 54,674 (2000). Accordingly, the period of the terminal disclaimer filed September 8, 2005 will be equivalent to the lesser of period (1) or (2), as noted above, for this application.

The file does not indicate a change of address has been submitted, although the address given on the petition differs from the address of record. If appropriate, a change of address should be filed in accordance with MPEP 601.03. A courtesy copy of this decision is being mailed to the address given on the petition; however, the Office will mail all future correspondence solely to the address of record.

Telephone inquiries concerning this decision should be directed to Wan Laymon at (571) 272-3220.

This matter is being referred to Publishing Division.

Wan Laymon
Petitions Examiner
Office of Petitions
Office of the Deputy Commissioner
for Patent Examination Policy

cc: JAMES E. BRUNTON
700 NORTH BRAND BOULEVARD, SUITE 430
GLENDALE, CA 91203

UNITED STATES PATENT AND TRADEMARK OFFICE

Commissioner for Patents
United States Patent and Trademark Office
P.O. Box 1450
Alexandria, VA 22313-1450
www.uspto.gov

TAFT, STETTINIUS & HOLLISTER LLP
SUITE 1800
425 WALNUT STREET
CINCINNATI OH 45202-3957

COPY MAILED

JAN 0 4 2008

OFFICE OF PETITIONS

In re Application of

Goulet, et al.

Application No. 29/205,776

Filed: May 20, 2004

Attorney Docket No. NEW10-GN005(39139)

DECISION ON PETITION

This is a decision on the petition under 37 CFR §1.137(b), filed December 14, 2007, to revive the above-identified application.

The petition is **dismissed**.

Any request for reconsideration of this decision must be submitted within TWO (2) MONTHS from the mail date of this decision. Extensions of time under 37 CFR 1.136(a) are permitted. The reconsideration request should include a cover letter entitled "Renewed Petition" under 37 CFR 1.137(b)."

This application became abandoned for failure to respond in a timely manner to the Notice of Allowance and Issue Fee Due and the Notice of Allowability mailed August 3, 2007. The notices allowed statutory periods for reply of three months from its mailing date. No reply was received within the allowable period, and the application became abandoned on November 4, 2007. A Notice of Abandonment of was mailed on November 30, 2007.

Effective December 1, 1997, the provisions of 37 CFR 1.137(b) now provide that where the delay in reply was unintentional, a petition may be filed to revive an abandoned application or a lapsed patent pursuant to 37 CFR 1.137(b). A grantable petition pursuant to 37 CFR 1.137(b) must be accompanied by:

(1) the required reply, unless previously filed. In a non-provisional application abandoned for failure to prosecute, the required reply may be met by the filing of a continuing application. In an application or patent, abandoned or lapsed for failure to pay the issue fee, or any portion thereof, the required reply must be the payment of the issue fee or any outstanding balance thereof.

(2) the petition fee as set forth in 37 CFR 1.17(m);

(3) a statement that the entire delay in filing the required reply from the due date for the reply until the filing of a grantable petition pursuant to 37 CFR 1.137(b) was unintentional. The Commissioner may require additional information where there is a question whether the delay was unintentional; and

(4) any terminal disclaimer (and fee set forth in 37 CFR 1.20(d)) required pursuant to 37 CFR 1.137(d).

The instant petition does not satisfy the requirements of item (4) above.

As to item (4), the terminal disclaimer was not found with the petition papers. The subject application is a design application, therefore; a terminal disclaimer is required in order to revive the application. Any renewed petition filed must be accompanied by the completed terminal disclaimer form, which is enclosed for petitioner's convenience. Pursuant to 37 CFR 1.137(d), the terminal disclaimer must dedicate to the public a terminal part of the term of any patent granted from this application that is equivalent to the period of abandonment of the application.

Further correspondence with respect to this matter should be addressed as follows:

By mail: Mail Stop Petitions
Commissioner for Patents
United States Patent and Trademark Office
Box 1450
Alexandria, VA 22313-1450

By facsimile: (571) 273-8300

Telephone inquiries concerning this matter may be directed to the undersigned at (571) 272-3222.

Kenya A. McLaughlin
Petitions Attorney
Office of Petitions

Enclosure: "Terminal Disclaimer to Accompany Petition"

PTO/SB/63 (12-07)
Approved for use through 12/31/2007. OMB 0651-0031
U.S. Patent and Trademark Office; U.S. DEPARTMENT OF COMMERCE
Under the Paperwork Reduction Act of 1995, no persons are required to a collection of information unless it displays a valid OMB control number.

TERMINAL DISCLAIMER TO ACCOMPANY PETITION

Docket Number (Optional)

In re Application of:

Name:

Application Number:

Filed:

For:

The owner*, _____ of _____ percent interest in the above-identified application hereby disclaims a terminal part of the term of any patent granted the above-identified application equivalent to: (1) if the above-identified application is a design application, the period of abandonment of the above-identified application, and (2) if the above-identified application is a utility or plant application, the lesser of: (a) the period of abandonment of the application; or (b) the period extending beyond twenty years from the date on which the above-identified application was filed in the United States or, if the application contains a specific reference to an earlier filed application(s) under 35 U.S.C. 120, 121, or 365(c), from the date on which the earliest such application was filed. This disclaimer also applies to any patent granted on a utility or plant application filed before June 8, 1995, or a design application, that contains a specific reference under 35 U.S.C. 120, 121, or 365(c) to the above-identified application. This disclaimer is binding upon the grantee, and its successors or assigns.

Check either box 1 or 2 below, if appropriate.

1. ☐ For submissions on behalf of an organization (e.g., corporation, partnership, university, government agency, etc.), the undersigned is empowered to act on behalf of the organization.

2. ☐ The undersigned is an attorney or agent of record. Registration Number_____.

Signature	Date
Typed or Printed Name	Telephone Number

☐ Terminal disclaimer fee under 37 CFR 1.20(d) included.

WARNING: Information on this form may become public. Credit card information should not be included on this form. Provide credit card information and authorization on PTO-2038.

* Statement under 37 CFR 3.73(b) is required if terminal disclaimer is signed by the assignee (owner). Form PTO/SB/96 may be used for making this certification. See MPEP § 324.

This collection of information is required by 37 CFR 1.137. The information is required to obtain or retain a benefit by the public which is to file (and by the USPTO to process) an application. Confidentiality is governed by 35 U.S.C. 122 and 37 CFR 1.11 and 1.14. This collection is estimated to take 12 minutes to complete, including gathering, preparing, and submitting the completed application form to the USPTO. Time will vary depending upon the individual case. Any comments on the amount of time you require to complete this form and/or suggestions for reducing this burden, should be sent to the Chief Information Officer, U.S. Patent and Trademark Office, U.S. Department of Commerce, P.O. Box 1450, Alexandria, VA 22313-1450. DO NOT SEND FEES OR COMPLETED FORMS TO THIS ADDRESS. **SEND TO: Commissioner for Patents, P.O. Box 1450, Alexandria, VA 22313-1450.**

If you need assistance in completing the form, call 1-800-PTO-9199 and select option 2.

Privacy Act Statement

The **Privacy Act of 1974 (P.L. 93-579)** requires that you be given certain information in connection with your submission of the attached form related to a patent application or patent. Accordingly, pursuant to the requirements of the Act, please be advised that: (1) the general authority for the collection of this information is 35 U.S.C. 2(b)(2); (2) furnishing of the information solicited is voluntary; and (3) the principal purpose for which the information is used by the U.S. Patent and Trademark Office is to process and/or examine your submission related to a patent application or patent. If you do not furnish the requested information, the U.S. Patent and Trademark Office may not be able to process and/or examine your submission, which may result in termination of proceedings or abandonment of the application or expiration of the patent.

The information provided by you in this form will be subject to the following routine uses:

1. The information on this form will be treated confidentially to the extent allowed under the Freedom of Information Act (5 U.S.C. 552) and the Privacy Act (5 U.S.C 552a). Records from this system of records may be disclosed to the Department of Justice to determine whether disclosure of these records is required by the Freedom of Information Act.
2. A record from this system of records may be disclosed, as a routine use, in the course of presenting evidence to a court, magistrate, or administrative tribunal, including disclosures to opposing counsel in the course of settlement negotiations.
3. A record in this system of records may be disclosed, as a routine use, to a Member of Congress submitting a request involving an individual, to whom the record pertains, when the individual has requested assistance from the Member with respect to the subject matter of the record.
4. A record in this system of records may be disclosed, as a routine use, to a contractor of the Agency having need for the information in order to perform a contract. Recipients of information shall be required to comply with the requirements of the Privacy Act of 1974, as amended, pursuant to 5 U.S.C. 552a(m).
5. A record related to an International Application filed under the Patent Cooperation Treaty in this system of records may be disclosed, as a routine use, to the International Bureau of the World Intellectual Property Organization, pursuant to the Patent Cooperation Treaty.
6. A record in this system of records may be disclosed, as a routine use, to another federal agency for purposes of National Security review (35 U.S.C. 181) and for review pursuant to the Atomic Energy Act (42 U.S.C. 218(c)).
7. A record from this system of records may be disclosed, as a routine use, to the Administrator, General Services, or his/her designee, during an inspection of records conducted by GSA as part of that agency's responsibility to recommend improvements in records management practices and programs, under authority of 44 U.S.C. 2904 and 2906. Such disclosure shall be made in accordance with the GSA regulations governing inspection of records for this purpose, and any other relevant (*i.e.*, GSA or Commerce) directive. Such disclosure shall not be used to make determinations about individuals.
8. A record from this system of records may be disclosed, as a routine use, to the public after either publication of the application pursuant to 35 U.S.C. 122(b) or issuance of a patent pursuant to 35 U.S.C. 151. Further, a record may be disclosed, subject to the limitations of 37 CFR 1.14, as a routine use, to the public if the record was filed in an application which became abandoned or in which the proceedings were terminated and which application is referenced by either a published application, an application open to public inspection or an issued patent.
9. A record from this system of records may be disclosed, as a routine use, to a Federal, State, or local law enforcement agency, if the USPTO becomes aware of a violation or potential violation of law or regulation.

UNITED STATES PATENT AND TRADEMARK OFFICE

Commissioner for Patents
United States Patent and Trademark Office
P.O. Box 1450
Alexandria, VA 22313-1450
www.uspto.gov

JUL 14 2004

BANNER & WITCOFF
1001 G STREET N W
SUITE 1100
WASHINGTON DC 20001

In re Application of	:	
Brad Wahoske et al	:	
Serial No.: 29/205,802	:	DECISION ON PETITION
Filed: May 21, 2004	:	
For: Portion Of A Shoe Sole	:	

This is in response to the petition applicant filed on May 21, 2004 to make the above-identified application special under the provisions of 37 CFR 1.102(d).

Applicant has satisfied the provisions set forth in M.P.E.P. 708.02, VIII, thus the petition is **GRANTED**.

The application will be forwarded to the examiner for action on the merits commensurate with this decision.

Should there be any questions with regard to this letter please contact John Kittle by letter addressed to the Director, Technology Center 3700/2900, P.O. Box 1450 Alexandria, VA 22313-1450, or by telephone at (703) 308-0873 or by facsimile transmission at (703) 308-3139.

John E. Kittle

John E. Kittle
Director
Technology Center 3700/2900

UNITED STATES PATENT AND TRADEMARK OFFICE

Commissioner for Patents
United States Patent and Trademark Office
P.O. Box 1450
Alexandria, VA 22313-1450
www.uspto.gov

JUL 14 2004

BANNER & WITCOFF
1001 G STREET N W
SUITE 1100
WASHINGTON DC 20001

In re Application of	:	
Leo S. Chang	:	
Serial No.: 29/205,803	:	DECISION ON PETITION
Filed: May 21, 2004	:	
For: Portion Of A Shoe Upper	:	

This is in response to the petition applicant filed on May 21, 2004 to make the above-identified application special under the provisions of 37 CFR 1.102(d).

Applicant has satisfied the provisions set forth in M.P.E.P. 708.02, VIII, thus the petition is **GRANTED**.

The application will be forwarded to the examiner for action on the merits commensurate with this decision.

Should there be any questions with regard to this letter please contact John Kittle by letter addressed to the Director, Technology Center 3700/2900, P.O. Box 1450 Alexandria, VA 22313-1450, or by telephone at (703) 308-0873 or by facsimile transmission at (703) 308-3139.

John E. Kittle

John E. Kittle
Director
Technology Center 3700/2900

UNITED STATES PATENT AND TRADEMARK OFFICE

UNITED STATES DEPARTMENT OF COMMERCE
United States Patent and Trademark Office
Address: COMMISSIONER FOR PATENTS
P.O. Box 1450
Alexandria, Virginia 22313-1450
www.uspto.gov

APPL NO.	FILING OR 371 (c) DATE	ART UNIT	FIL FEE REC'D	ATTY.DOCKET NO	DRAWINGS	TOT CLMS	IND CLMS
29/205,821	05/20/2004	2915	340	D-US-TN 3697	14	1	1

CONFIRMATION NO. 9634

CORRECTED FILING RECEIPT

OC000000015671105

Bruce S. Shapiro
Black & Decker Corporation
Mail Stop TW199
701 E. Joppa Rd
Towson, MD 21286

Date Mailed: 04/07/2005

Receipt is acknowledged of this regular Patent Application. It will be considered in its order and you will be notified as to the results of the examination. Be sure to provide the U.S. APPLICATION NUMBER, FILING DATE, NAME OF APPLICANT, and TITLE OF INVENTION when inquiring about this application. Fees transmitted by check or draft are subject to collection. Please verify the accuracy of the data presented on this receipt. **If an error is noted on this Filing Receipt, please mail to the Commissioner for Patents P.O. Box 1450 Alexandria Va 22313-1450. Please provide a copy of this Filing Receipt with the changes noted thereon. If you received a "Notice to File Missing Parts" for this application, please submit any corrections to this Filing Receipt with your reply to the Notice. When the USPTO processes the reply to the Notice, the USPTO will generate another Filing Receipt incorporating the requested corrections (if appropriate).**

Applicant(s)

Vincent P. Cooper, Baltimore, MD;

Power of Attorney:

Edward Murphy--20625
John Del Ponti--24258
Charles Yocum--30121
Bruce Shapiro--33120
Richard Veltman--36957
Adan Ayala--38373
Michael Leary--41144
Paul Ratcliffe--45290

Domestic Priority data as claimed by applicant

Foreign Applications

If Required, Foreign Filing License Granted: 06/30/2004

The country code and number of your priority application, to be used for filing abroad under the Paris Convention, is US29/205,821

Projected Publication Date: None, application is not eligible for pre-grant publication

Non-Publication Request: No

Early Publication Request: No

Title

Power drill

Preliminary Class

D08

LICENSE FOR FOREIGN FILING UNDER
Title 35, United States Code, Section 184
Title 37, Code of Federal Regulations, 5.11 & 5.15

GRANTED

The applicant has been granted a license under 35 U.S.C. 184, if the phrase "IF REQUIRED, FOREIGN FILING LICENSE GRANTED" followed by a date appears on this form. Such licenses are issued in all applications where the conditions for issuance of a license have been met, regardless of whether or not a license may be required as set forth in 37 CFR 5.15. The scope and limitations of this license are set forth in 37 CFR 5.15(a) unless an earlier license has been issued under 37 CFR 5.15(b). The license is subject to revocation upon written notification. The date indicated is the effective date of the license, unless an earlier license of similar scope has been granted under 37 CFR 5.13 or 5.14.

This license is to be retained by the licensee and may be used at any time on or after the effective date thereof unless it is revoked. This license is automatically transferred to any related applications(s) filed under 37 CFR 1.53(d). This license is not retroactive.

The grant of a license does not in any way lessen the responsibility of a licensee for the security of the subject matter as imposed by any Government contract or the provisions of existing laws relating to espionage and the national security or the export of technical data. Licensees should apprise themselves of current regulations especially with respect to certain countries, of other agencies, particularly the Office of Defense Trade Controls, Department of State (with respect to Arms, Munitions and Implements of War (22 CFR 121-128)); the Office of Export Administration, Department of Commerce (15 CFR 370.10 (j)); the Office of Foreign Assets Control, Department of Treasury (31 CFR Parts 500+) and the Department of Energy.

NOT GRANTED

No license under 35 U.S.C. 184 has been granted at this time, if the phrase "IF REQUIRED, FOREIGN FILING LICENSE GRANTED" DOES NOT appear on this form. Applicant may still petition for a license under 37 CFR 5.12, if a license is desired before the expiration of 6 months from the filing date of the application. If 6 months has lapsed from the filing date of this application and the licensee has not received any indication of a secrecy order under 35 U.S.C. 181, the licensee may foreign file the application pursuant to 37 CFR 5.15(b).

UNITED STATES PATENT AND TRADEMARK OFFICE

Commissioner for Patents
United States Patent and Trademark Office
P.O. Box 1450
Alexandria, VA 22313-1450
www.uspto.gov

LEYDIG VOIT & MAYER, LTD.
700 THIRTEENTH ST. N.W.
SUITE 300
WASHINGON DC 20005-3960

COPY MAILED

MAY 22 2007

OFFICE OF PETITIONS

In re Application of	:	
Naruhito Higo et al	:	
Application No. 29/205,831	:	ON PETITION
Filed: May 21, 2004	:	
Attorney Docket No. 403093/SOEI	:	

This is a decision on the petition, filed May 21, 2007, under 37 CFR 1.313(c)(3) to withdraw the above-identified application from issue after payment of the issue fee.

The petition is **GRANTED**.

The above-identified application is withdrawn from issue in favor of a continued prosecution application (CPA) under 37 CFR 1.53(d).

Petitioner is advised that the issue fee paid on January 26, 2007 in the parent application is not refundable nor can it be applied towards any new Notice of Allowance which may issue on the CPA filed May 21, 2007.

Telephone inquiries should be directed to the undersigned at (571) 272-3208.

This matter is being referred to Technology Center AU 2912 for processing of the CPA.

Karen Creasy

Karen Creasy
Petitions Examiner
Office of Petitions

UNITED STATES PATENT AND TRADEMARK OFFICE

Commissioner for Patents
United States Patent and Trademark Office
P.O. Box 1450
Alexandria, VA 22313-1450
www.uspto.gov

COPY MAILED

AUG 30 2006

OFFICE OF PETITIONS

SANCHELIMA AND ASSOCIATES, P.A.
JESUS SANCHELIMA, ESQ.
235 S.W. LE JEUNE RD.
MIAMI, FL 33134

COPY MAILED

AUG 28 2006

OFFICE OF PETITIONS

CANCELLED

In re Application of	:	
Ivania Filgueiras	:	
Application No. 29/205,851	:	ON PETITION
Filed: May 24, 2004	:	
Attorney Docket No. 240141	:	

This is a decision on the petition under 37 CFR 1.137(b), filed December 8, 2005, to revive the above-identified application.

The petition is **GRANTED**.

The above-identified application became abandoned for failure submit the formal drawings in a timely manner in reply to the Notice of Allowance mailed February 23, 2005, which set a statutory period for reply of three (3) months. Accordingly, the above-identified application became abandoned on May 24, 2005.

Telephone inquiries concerning this decision should be directed to Irvin Dingle at (571) 272-3210.

This file is being forwarded to the Publishing Division to be reviewed by the drawing draftperson.

Irvin Dingle
Petitions Examiner
Office of Petitions

UNITED STATES PATENT AND TRADEMARK OFFICE

Commissioner for Patents
United States Patent and Trademark Office
P.O. Box 1450
Alexandria, VA 22313-1450
www.uspto.gov

EZRA SUTTON, P.A.
PLAZA 9
900 ROUTE 9
WOODBRIDGE NJ 07095

RECEIVED

DEC 23 2008

OFFICE OF PETITIONS

In re Application of	:	
Wojciech Doliwa	:	
Application No. 29/205,921	:	ON PETITION
Filed: May 21, 2004	:	
Attorney Docket No. SABERT 3.1-005	:	

This is a decision on the petition under 37 CFR 1.137(b), filed November 17, 2008, which will be treated as a petition to withdraw of the holding of abandonment in the above-identified application.

The petition is **GRANTED**.

This application was held abandoned for failure to timely submit Corrected drawings on or before November 3, 2005, as required by the Notice of Allowability (Notice), mailed August 3, 2005. A Notice of Abandonment was mailed December 29, 2006.

Petitioner contends that the Notice of Abandonment mailed December 29, 2005 for failure to respond to the Notice of Allowability mailed August 3, 2005 be withdrawn as petitioner timely filed a response. Petitioner has supplied a copy of the previously mailed correspondence, which bears a certificate of mailing date of November 2, 2005.

In view of the above, the Notice of Abandonment is hereby vacated and the holding of abandonment withdrawn. Further, the petition under 37 CFR 1.137(b) is hereby **DISMISSED AS MOOT**.

Petitioner will receive a refund of the $1,620.00 petition fee via treasury check in due course.

Telephone inquiries concerning this decision should be directed to Joan Olszewski at (571) 272-7751.

This application is being referred to the Office of Data Management for processing into a patent.

/Liana Walsh/
Liana Walsh
Petitions Examiner
Office of Petitions

UNITED STATES PATENT AND TRADEMARK OFFICE

Commissioner for Patents
United States Patent and Trademark Office
P.O. Box 1450
Alexandria, VA 22313-1450
www.uspto.gov

PEARL COHEN ZEDEK LATZER, LLP
10 ROCKEFELLER PLAZA
SUITE 1001
NEW YORK, NY 10020

8/19/05

In re Application of
Avraham Namdar
Serial No.: 29/205,931
Filed: May 24, 2004
Attorney Docket No.: D-0402-US

: PETITION DECISION

This is a decision on applicant's petition to revive patent application under 37 CFR 1.137(b), filed May 5, 2005, to revive an unintentionally abandoned application.

This application became abandoned for failure to respond to the Notice to File Missing Parts mailed July 1, 2004, which set a two-month shortened statutory period to submit a signed declaration, filing fee, and late fee. As no response was received by September 1, 2004, a Notice of Abandonment was mailed March 10, 2005; applicant then filed this petition.

A grantable petition for a design application under 37 CFR 1.137(b), as revised December 1, 1997, requires four items: (1) a petition and petition fee; (2) a complete response if not earlier made; (3) a statement that the entire period of delay in prosecution was unintentional; and (4) a terminal disclaimer and disclaimer fee. The requirement for a terminal disclaimer has been waived, as the petition was filed within two months of the mailing of the Notice of Abandonment.

Applicant's petition is **GRANTED**.

The application will be forwarded to an Examiner for initial examination in due course.

Should there be any questions with respect to this decision, please contact Sandra Morris; by mail addressed to: Director, Technology Center 1700/2900, P.O. Box 1450, Alexandria, VA 22313-1450; or by telephone at (571) 272-2622.

Jacqueline M. Stone

Jacqueline Stone
Director, Technology Center 1700/2900

UNITED STATES PATENT AND TRADEMARK OFFICE

Commissioner for Patents
United States Patent and Trademark Office
P.O. Box 1450
Alexandria, VA 22313-1450
www.uspto.gov

DINSMORE & SHOHL LLP
1900 CHEMED CENTER
255 EAST FIFTH STREET
CINCINNATI OH 45202

8/19/05

In re Application of
Danny A Mounce
Serial No.: 29/205,998
Filed: May 24, 2004
Attorney Docket No.: 32325-1

: PETITION DECISION

This is a decision on applicant's petition to revive patent application under 37 CFR 1.137(b), filed June 24, 2005, to revive an unintentionally abandoned application.

This application became abandoned for failure to respond to the Notice of Allowance mailed March 4, 2005, which set a three-month statutory period to submit the Issue Fee. As no response was received by June 6, 2005, the application was abandoned; applicant then filed this petition.

A grantable petition for a design application under 37 CFR 1.137(b), as revised December 1, 1997, requires four items: (1) a petition and petition fee; (2) a complete response if not earlier made; (3) a statement that the entire period of delay in prosecution was unintentional; and (4) a terminal disclaimer and disclaimer fee. The requirement for a terminal disclaimer has been waived, as the petition was filed before the mailing of the Notice of Abandonment.

Applicant's petition is **GRANTED**.

The application will be forwarded to Publication Division for printing as a patent in due course.

The terminal disclaimer fee of $65.00 will be refunded to applicant by Treasury Check in due course.

Should there be any questions with respect to this decision, please contact Sandra Morris; by mail addressed to: Director, Technology Center 1700/2900, P.O. Box 1450, Alexandria, VA 22313-1450; or by telephone at (571) 272-2622.

Jacqueline M. Stone

Jacqueline Stone
Director, Technology Center 1700/2900

UNITED STATES PATENT AND TRADEMARK OFFICE

Commissioner for Patents
United States Patent and Trademark Office
P.O. Box 1450
Alexandria, VA 22313-1450
www.uspto.gov

INVENTION PROTECTION ASSOCIATES LLP
PO BOX 3913
SHAWNEE MISSION KS 66203-0913

COPY MAILED
MAY 16 2006
OFFICE OF PETITIONS

In re Application of	:	
Travis L. Mayfield	:	
Application No. 29/206,004	:	ON PETITION
Filed: May 25, 2004	:	
Attorney Docket No. MALO-D1	:	

This is a decision on the petition to revive under 37 CFR 1.137(b), filed April 29, 2006.

The petition under 37 CFR 1.137(b) is **GRANTED**.

The above-identified application became abandoned for failure to timely file a reply in response to the non-final Office action mailed April 22, 2005. This Office action set a shortened statutory period for reply of three (3) months. No extensions of time under 37 CFR 1.136(a) were obtained. No reply having been received, the above identified application became abandoned on July 23, 2005. A Notice of Abandonment was mailed on November 18, 2005.

With the instant petition, applicant paid the petition fee, submitted the required reply in the form of an amendment, and made the proper statement of unintentional delay.

The application file is being forwarded to Group Art Unit 2914 for consideration of the amendment filed April 29, 2006.

Telephone inquiries related to this decision should be directed to the undersigned at (571)272-3207.

Cliff Congo
Petitions Attorney
Office of Petitions

UNITED STATES PATENT AND TRADEMARK OFFICE

COMMISSIONER FOR PATENTS
UNITED STATES PATENT AND TRADEMARK OFFICE
P.O. BOX 1450
ALEXANDRIA, VA 22313-1450
www.uspto.gov

FROSS, ZELNICK, LEHRMAN & ZISSU, PC
866 UNITED NATIONS PLAZA
NEW YORK, NY 10017

COPY MAILED

NOV 29 2006

OFFICE OF PETITIONS

NOTICE

In re Patent No. D519,268	:	
Issued: April 25, 2006	:	
Application No. 29/206,024	:	
Filed: May 24, 2004	:	
Patentee: Sandra Choi	:	

This is a notice regarding your request for acceptance of a fee deficiency submission under 37 CFR 1.28. On September 1, 1998, the Court of Appeals for the Federal Circuit held that 37 CFR 1.28(c) is the sole provision governing the time for correction of the erroneous payment of the issue fee as a small entity. **See DH Technology v. Synergystex International, Inc. 154 F.3d 1333, 47 USPQ2d 1865 (Fed. Cir. Sept. 1, 1998).**

The Office no longer investigates or rejects original or reissue applications under 37 CFR 1.56. **1098 Off. Gaz. Pat. Office 502 (January 3, 1989).** Therefore, nothing in this Notice is intended to imply that an investigation was done.

Your fee deficiency submission under 37 CFR 1.28 is hereby **ACCEPTED**.

This application no longer qualifies for small entity status. Accordingly, all future fees must be paid at the large entity rate.

Inquiries related to this communication should be directed to the Office of Petitions Staff at (571) 272-3282.

Sherry D. Brinkley
Petitions Examiner
Office of Petitions

UNITED STATES PATENT AND TRADEMARK OFFICE

COMMISSIONER FOR PATENTS
UNITED STATES PATENT AND TRADEMARK OFFICE
P.O. BOX 1450
ALEXANDRIA, VA 22313-1450
www.uspto.gov

FROSS, ZELNICK, LEHRMAN & ZISSU, PC
866 UNITED NATIONS PLAZA
NEW YORK, NY 10017

COPY MAILED

NOV 29 2006

OFFICE OF PETITIONS

NOTICE

In re Patent No. D500,916	:	
Issued: January 18, 2005	:	
Application No. 29/206,025	:	
Filed: May 24, 2004	:	
Patentee: Sandra Choi	:	

This is a notice regarding your request for acceptance of a fee deficiency submission under 37 CFR 1.28. On September 1, 1998, the Court of Appeals for the Federal Circuit held that 37 CFR 1.28(c) is the sole provision governing the time for correction of the erroneous payment of the issue fee as a small entity. **See DH Technology v. Synergystex International, Inc. 154 F.3d 1333, 47 USPQ2d 1865 (Fed. Cir. Sept. 1, 1998).**

The Office no longer investigates or rejects original or reissue applications under 37 CFR 1.56. **1098 Off. Gaz. Pat. Office 502 (January 3, 1989)**. Therefore, nothing in this Notice is intended to imply that an investigation was done.

Your fee deficiency submission under 37 CFR 1.28 is hereby **ACCEPTED**.

This application no longer qualifies for small entity status. Accordingly, all future fees must be paid at the large entity rate.

Inquiries related to this communication should be directed to the Office of Petitions Staff at (571) 272-3282.

Sherry D. Brinkley

Sherry D. Brinkley
Petitions Examiner
Office of Petitions

UNITED STATES PATENT AND TRADEMARK OFFICE

Commissioner for Patents
United States Patent and Trademark Office
P.O. Box 1450
Alexandria, VA 22313-1450
www.uspto.gov

FROSS, ZELNICK, LEHRMAN & ZISSU, PC
866 UNITED NATIONS PLAZA
NEW YORK, NY 10017

COPY MAILED
DEC 1 8 2006
OFFICE OF PETITIONS

In re Patent No. D523,617	:	
Issue Date: June 27, 2006	:	
Application No. 29/206,035	:	NOTICE
Filed: May 24, 2004	:	
Attorney Docket No. JCHO USA PA-0416435	:	

This is a notice regarding your request for acceptance of a fee deficiency submission under 37 CFR 1.28. On September 1, 1998, the Court of Appeals for the Federal Circuit held that 37 CFR 1.28(c) is the sole provision governing the time for correction of the erroneous payment of the issue fee as a small entity. **See DH Technology v. Synergystex International, Inc. 154 F.3d 1333, 47 USPQ2d 1865 (Fed. Cir. Sept. 1, 1998).**

The Office no longer investigates or rejects original or reissue applications under 37 CFR 1.56. **1098 Off. Gaz. Pat. Office 502 (January 3, 1989)**. Therefore, nothing in this Notice is intended to imply that an investigation was done.

Your fee deficiency submission under 37 CFR 1.28 is hereby **ACCEPTED**.

This application is no longer entitled to small entity status. Accordingly, all future fees paid in this application must be paid at the large entity rate.

Liana Walsh
Petitions Examiner
Office of Petitions

UNITED STATES PATENT AND TRADEMARK OFFICE

Commissioner for Patents
United States Patent and Trademark Office
P.O. Box 1450
Alexandria, VA 22313-1450
www.uspto.gov

FROSS, ZELNICK, LEHRMAN & ZISSU, PC
866 UNITED NATIONS PLAZA
NEW YORK, NY 10017

COPY MAILED

DEC 18 2006

OFFICE OF PETITIONS

In re Patent No. D501,711	:	
Issue Date: February 15, 2006	:	
Application No. 29/206,036	:	NOTICE
Filed: May 24, 2004	:	
Attorney Docket No. JCHO USA PA-0416010	:	

This is a notice regarding your request for acceptance of a fee deficiency submission under 37 CFR 1.28. On September 1, 1998, the Court of Appeals for the Federal Circuit held that 37 CFR 1.28(c) is the sole provision governing the time for correction of the erroneous payment of the issue fee as a small entity. **See DH Technology v. Synergystex International, Inc. 154 F.3d 1333, 47 USPQ2d 1865 (Fed. Cir. Sept. 1, 1998).**

The Office no longer investigates or rejects original or reissue applications under 37 CFR 1.56. **1098 Off. Gaz. Pat. Office 502 (January 3, 1989)**. Therefore, nothing in this Notice is intended to imply that an investigation was done.

Your fee deficiency submission under 37 CFR 1.28 is hereby **ACCEPTED**.

This application is no longer entitled to small entity status. Accordingly, all future fees paid in this application must be paid at the large entity rate.

Liana Walsh
Petitions Examiner
Office of Petitions

UNITED STATES PATENT AND TRADEMARK OFFICE

Commissioner for Patents
United States Patent and Trademark Office
P.O. Box 1450
Alexandria, VA 22313-1450
www.uspto.gov

PAUL T. KASHIMBA, ESQ.
GUNSTER, YOAKLEY & STEWART, P.A.
SUITE 1400
500 EAST BROWARD BOULEVARD
FORT LAUDERDALE, FL 33394

COPY MAILED

NOV 0 3 2005

OFFICE OF PETITIONS

In re Application of	:	
Boswell et al.	:	
Application No. 29/206,038	:	ON PETITION
Filed: May 25, 2004	:	
Attorney Docket No. 16960.00178C	:	

This is a decision on the petition under 37 C.F.R. § 1.137(b), filed September 29, 2005, to revive the above-identified application.

The petition is **GRANTED.**

The petition satisfies the conditions for revival pursuant to the provisions of 37 CFR 1.137(b) in that (1) the reply in the form of the Issue Fee Transmittal and remainder of the issue fee; (2) the petition fee; (3) the required statement of unintentional delay have been received; and (4) the terminal disclaimer and requisite fee. Accordingly, the response has been accepted as having been unintentionally delayed.

This matter is being referred to the Publishing Division for processing into a patent.

Telephone inquiries regarding this decision should be directed to the undersigned at (571) 272-3282.

Liana Chase
Petitions Examiner
Office of Petitions

UNITED STATES PATENT AND TRADEMARK OFFICE

COMMISSIONER FOR PATENTS
UNITED STATES PATENT AND TRADEMARK OFFICE
P.O. BOX 1450
ALEXANDRIA, VA 22313-1450
www.uspto.gov

David Chen
St. Onge Steward Johnston & Reens, LLC
986 Bedford Street
Stamford, CT 06905-5619

COPY MAILED

FEB 25 2005

OFFICE OF PETITIONS

In re Application of :
Thomas E. McClaskie :
Application No. 29/206,040 :
Filed: May 25, 2004 :
Attorney Docket No. 03824-D0161A :

ON PETITION

This is a decision on the petition filed February 16, 2005 under 37 CFR 1.313(c)(3) to withdraw the above-identified application from issue after payment of the issue fee. See 1233 *Official Gazette* 54 (April 11, 2000).

The petition is **GRANTED**.

Petitioner requests that the application be withdrawn from issue to permit abandonment for consideration of a continued prosecution application (CPA) under 37 CFR 1.53(d).

The application is withdrawn from issue.

Petitioner is advised that the issue fee paid on December 29, 2004, in the parent application is not refundable nor can it be applied towards any new Notice of Allowance which may issue on the CPA filed February 16, 2005.

Telephone inquiries should be directed to the undersigned at (571) 272-3204.

The application is being referred to Technology Center AU 2914 for processing of the CPA.

Karen Creasy for

Sherry D. Brinkley
Petitions Examiner
Office of Petitions
Office of the Deputy Commissioner
for Patent Examination Policy

UNITED STATES PATENT AND TRADEMARK OFFICE

Commissioner for Patents
United States Patent and Trademark Office
P.O. Box 1450
Alexandria, VA 22313-1450
www.uspto.gov

BUCHANAN INGERSOLL PC
(INCLUDING BURNS, DOANE,
SWECKER & MATHIS)
P.O. BOX 1404
ALEXANDRIA, VA 22313-1404

COPY MAILED

JAN 1 3 2006

OFFICE OF PETITIONS

In re Application of	:	
David Lewis	:	
Application No. 29/206,053	:	ON PETITION
Filed: May 25, 2004	:	
Attorney Docket No. 034009-038	:	

This is a decision on the petition under 37 CFR 1.137(b), filed July 19, 2005, to revive the above-identified application.

The petition is **GRANTED.**

The above-identified application became abandoned for failure to submit the Issue fee in a timely manner in reply to the Notice of Allowance mailed December 1, 2004, which set a statutory period for reply of three (3) months. Accordingly, the above-identified application became abandoned on March 2, 2005.

The petition satisfies the conditions for revival pursuant to the provisions of 37 CFR 1.137(b) in that (1) the reply in the form of payment of the issue fee; (2) the petition fee; and (3) the required statement of unintentional delay have been received. Accordingly, the issue fee is accepted as having been unintentionally delayed.

Telephone inquiries concerning this decision should be directed to the undersigned at (571) 272-3210.

This matter is being referred to the Publishing Division for further processing.

Irvin Dingle
Petitions Examiner
Office of Petitions

UNITED STATES PATENT AND TRADEMARK OFFICE

Commissioner for Patents
United States Patent and Trademark Office
P. O. Box 1450
Alexandria, VA 22313-1450
www. uspto. gov

LAWRENCE E. APOLZON
866 UNITED NATIONS PLAZA
NEW YORK, NY 10017

COPY MAILED

FEB 14 2007

OFFICE OF PETITIONS

In re Patent No. D527880 :
Issue Date: September 12, 2006 :
Application No. 29/206,054 : NOTICE
Filed: May 25, 2004 :
Attorney Docket No. JCHO USA PA-0416570

This is a notice regarding your request for acceptance of a fee deficiency submission under 37 CFR 1.28. On September 1, 1998, the Court of Appeals for the Federal Circuit held that 37 CFR 1.28(c) is the sole provision governing the time for correction of the erroneous payment of the issue fee as a small entity. **See DH Technology v. Synergystex International, Inc. 154 F.3d 1333, 47 USPQ2d 1865 (Fed. Cir. Sept. 1, 1998).**

The Office no longer investigates or rejects original or reissue applications under 37 CFR 1.56. **1098 Off. Gaz. Pat. Office 502 (January 3, 1989).** Therefore, nothing in this Notice is intended to imply that an investigation was done.

Your fee deficiency submission under 37 CFR 1.28 is hereby **ACCEPTED**.

Inquiries related to this communication should be directed to Irvin Dingle at (571) 272-3210.

Irvin Dingle
Petitions Examiner
Office of Petitions

UNITED STATES PATENT AND TRADEMARK OFFICE

Commissioner for Patents
United States Patent and Trademark Office
P.O. Box 1450
Alexandria, VA 22313-1450
www.uspto.gov

FROSS, ZELNICK, LEHRMAN & ZISSU PC
866 UNITED NATIONS PLAZA
NEW YORK, NY 10017

COPY MAILED

MAY 08 2007

OFFICE OF PETITIONS

In re Patent No. D-501,712	:	
Issue Date: February 15, 2005	:	
Application No. 29/206,064	:	NOTICE
Filed: May 24, 2004	:	
Attorney Docket No. JCHO USA PA-0416572	:	

This is a notice regarding your request for acceptance of a fee deficiency submission under 37 CFR 1.28. On September 1, 1998, the Court of Appeals for the Federal Circuit held that 37 CFR 1.28(c) is the sole provision governing the time for correction of the erroneous payment of the issue fee as a small entity. **See DH Technology v. Synergystex International, Inc. 154 F.3d 1333, 47 USPQ2d 1865 (Fed. Cir. Sept. 1, 1998).**

The Office no longer investigates or rejects original or reissue applications under 37 CFR 1.56. **1098 Off. Gaz. Pat. Office 502 (January 3, 1989)**. Therefore, nothing in this Notice is intended to imply that an investigation was done.

Your fee deficiency submission under 37 CFR 1.28 is hereby **ACCEPTED**.

This application is no longer entitled to small entity status. Accordingly, all future fees paid in this application must be paid at the large entity rate.

Inquiries related to this communication should be directed to the undersigned at (571) 272-3218.

Frances Hicks
Petitions Examiner
Office of Petitions

UNITED STATES PATENT AND TRADEMARK OFFICE

Commissioner for Patents
United States Patent and Trademark Office
P.O. Box 1450
Alexandria, VA 22313-1450
www.uspto.gov
DIW Mar-07

FROSS, ZELNICK, LEHRMAN & ZISSU, PC
866 UNITED NATIONS PLAZA
NEW YORK NY 10017

COPY MAILED

MAR 2 6 2007

OFFICE OF PETITIONS

In re Patent No. D507882	:	
Issued: 08/02/2005	:	
Application No. 29/206092	:	ON PETITION
Filed: 05/26/2004	:	
Atty. Docket No.: JCHO 0416640	:	

This is in response to the deficiency fee payment filed pursuant to 37 CFR 1.28(c) on 18 August, 2006.

37 CFR 1.28(c) states, "The deficiency is based on the amount of the fee, for other than a small entity, in effect at the time the deficiency is paid in full."

The Office no longer investigates or rejects original or reissue applications under 37 CFR 1.56. **1098 Off. Gaz. Pat. Office 502 (January 3, 1989)**. Therefore, nothing in this Notice is intended to imply that an investigation was done.

Your fee deficiency submission under 37 CFR 1.28 is hereby **ACCEPTED**.

Small entity status will no longer apply.

Telephone inquiries should be directed to the undersigned at (571) 272-3231.

DWood

Douglas I. Wood
Senior Petitions Attorney
Office of Petitions

UNITED STATES PATENT AND TRADEMARK OFFICE

Commissioner for Patents
United States Patent and Trademark Office
P.O. Box 1450
Alexandria, VA 22313-1450
www.uspto.gov

ARKADY SHULMAN
5523 PARKMOR RD
CALABASAS CA 91302

COPY MAILED

MAR 14 2006

OFFICE OF PETITIONS

In re Application of	:
Arkady Shulman	: DECISION GRANTING PETITION
Application No. 29/206,124	: AND WITHDRAWING THE
Filed: May 26, 2004	: HOLDING OF ABANDONMENT
Title: Tulip Flower or Candle Stand	:

This is a decision on the "PETITION TO WITHDRAW HOLDING OF ABANDONMENT", filed December 16, 2005, which is being treated as a petition under 37 CFR 1.181.

The petition under 37 CFR 1.181 is **GRANTED**.

The holding of abandonment is **WITHDRAWN**.

The above-identified application was held abandoned for failure to timely file drawings in response to the Notice of Allowability mailed April 5, 2005. This Notice set a three month statutory period for reply. Accordingly, no drawings having been received, the application became abandoned on July 6, 2005. A Notice of Abandonment was mailed on October 19, 2005.

With the instant petition, applicant argues that the Notice of Allowability erroneously required corrected drawings, as the Examiner's Amendment did not make any such request for drawings. The undersigned has confirmed with the examiner that indeed no new drawings were in fact required.

Given the basis for granting this petition, no petition fee was required.

The matter is being forwarded to the Office of Patent Publication for processing into a patent.

Telephone inquiries related to this decision should be directed to the undersigned at (571)272-3207.

Cliff Congo
Petitions Attorney
Office of Petitions

10-20-06

SPE RESPONSE FOR CERTIFICATE OF CORRECTION

Paper No.: _____

DATE : November 21, 2006

TO SPE OF : ART UNIT 2913

SUBJECT : Request for Certificate of Correction for Appl. No.: 29/206142 patent No.: D5108,48

Please respond to this request for a certificate of correction within 7 days.

Please review the requested changes/corrections as shown in the **COCIN** document(s) in the IFW application image. No new matter should be introduced, nor should the scope or meaning of the claims be changed.

Please complete the response (see below) and forward the completed response to scanning using document code **COCX**.

Magdalene Talley

Certificates of Correction Branch

703-308-9390 ext. 116

Thank You For Your Assistance

The request for issuing the above-identified correction(s) is hereby:

Note your decision on the appropriate box.

- ☒ **Approved** — **All** changes apply.
- ☐ **Approved in Part** — Specify below which changes **do not** apply.
- ☐ **Denied** — State the reasons for denial below.

Comments: _____

Caron D Veynar

CARON D. VEYNAR
SUPERVISORY PATENT EXAMINER

SPE

2913

Art Unit

UNITED STATES PATENT AND TRADEMARK OFFICE

Commissioner for Patents
United States Patent and Trademark Office
P.O. Box 1450
Alexandria, VA 22313-1450
www.uspto.gov

JAMES R. THEIN
2231 CRYSTAL DRIVE
SUITE 105
ARLINGTON VA 22202

COPY MAILED

AUG 0 1 2005

OFFICE OF PETITIONS

In re Application of :
Tim Nudo : DECISION GRANTED
Application No. 29/206,145 :
Deposited: May 27, 2004 :
Title.:Edge Protector For Cargo :

This is a decision on the "Response" to the Notice of Incomplete Nonprovisional Application filed May 23, 2005, requesting that the above-identified application be accorded the filing date of May 27, 2004.[1]

Application papers in the above-identified application were deposited on May 27, 2004. However, on May 12, 2005, the Office of Initial Patent Examination mailed a "Notice of Incomplete Nonprovisional Application", notifying applicants that the application papers had **not** been accorded a filing date because the application was deposited without a specification and at least one claim.

In response, 1 sheet of specification containing at least one claim and the present petition were filed on May 23, 2005. The petition contends that the application as filed included 1 sheet of specification which contained at least one claim. In support, the petition is accompanied by a copy of applicant's postcard receipt which acknowledges receipt in the office of "Drawings: 3# of sheets includes 6 figures, design application, dec., POA,

[1] It is noted this is a design application.

Trans Letter and Assignment" on May 27, 2004.[2]

Applicant's postcard receipt is prima facie[3] evidence that at least one page containing the specification and at least one claim were received on May 27, 2004, but the specification and claim are not present in the file. Hence, it is clear that the papers for this application were mishandled by the Office. Therefore, it is concluded that 1 sheet of specification and claim, was received on May 27, 2004, as shown in counsel's file, and later misplaced in the Office.

The petition is Granted.

Since the original specification and claim cannot be located in the Office, the copy of the specification and claim supplied on May 23, 2005, will be used for processing and examination purposes.

A petition fee has not been charged.

The application will be returned to the Office of Initial Patent Examination for further processing with a **filing date of May 27, 2004**, using the 1 sheet of specification which contains one claim supplied on May 23, 2005.

Telephone inquiries related to this decision may be directed to the undersigned at (571) 272-3215.

Charlema R. Grant

Charlema R. Grant
Petition Attorney
Office of Petitions

---

[2]It is further noted that the specification and claim are contained on one sheet of paper.

[3]A postcard receipt which itemizes and properly identifies the items which are being filed serves as prima facie evidence of receipt in the office of all items listed thereon. See MPEP 503.

UNITED STATES PATENT AND TRADEMARK OFFICE

Commissioner for Patents
United States Patent and Trademark Office
P.O. Box 1450
Alexandria, VA 22313-1450
www.uspto.gov

JAMES R. THEIN
2231 CRYSTAL DRIVE
SUITE 105
ARLINGTON VA 22202

COPY MAILED

JUL 3 1 2007

OFFICE OF PETITIONS

ON PETITION

In re Application of :
Tim Nudo :
Application No. 29/206,145 :
Filed: May 27, 2004 :
For: EDGE PROTECTOR FOR CARGO :

This is a decision on the petition under 37 CFR 1.137(b), filed March 12, 2007, to revive the above-identified application.

The petition is **DISMISSED**.

Any request for reconsideration of this decision must be submitted within TWO (2) MONTHS from the mail date of this decision. Extensions of time under 37 CFR 1.136(a) are permitted. The reconsideration request should include a cover letter entitled "Renewed Petition under 37 CFR 1.137(b)." This is **not** final agency action within the meaning of 5 U.S.C. § 704.

A grantable petition under 37 CFR 1.137(b)[1] must be accompanied by: (1) the required reply,[2] unless previously filed; (2) the petition fee as set forth in 37 CFR 1.17(m); (3) a statement that the entire delay in filing the required reply from the due date for the reply until the filing of a grantable petition pursuant to 37 CFR 1.137(b) was unintentional; and (4) any terminal disclaimer (and fee as set forth in 37 CFR 1.20(d)) required by 37 CFR 1.137(c). Where there is a question as to whether either the abandonment or the delay in filing a petition under 37 CFR 1.137 was unintentional, the Commissioner may require additional information. See MPEP 711.03(c)(III)(C) and (D). The instant petition lack(s) item(s) (4).

Since the above application is a design application, a terminal disclaimer is required

---

[1] As amended effective December 1, 1997. See Changes to Patent Practice and Procedure; Final Rule Notice, 62 Fed. Reg. 53131, 53194-95 (October 10, 1997), 1203 Off. Gaz. Pat. Office 63, 119-20 (October 21, 1997).

[2] In a nonprovisional application abandoned for failure to prosecute, the required reply may be met by the filing of a continuing application. In an application or patent, abandoned or lapsed for failure to pay the issue fee or any portion thereof, the required reply must be the payment of the issue fee or any outstanding balance thereof.

Further correspondence with respect to this matter should be addressed as follows:

By mail: Mail Stop PETITIONS
Commissioner for Patents
Post Office Box 1450
Alexandria, VA 22313-1450

By hand: Customer Window located at:

Randolph Building
401 Dulany Street
Alexandria, VA 22314

By fax: (571) 273-8300
ATTN: Office of Petitions

Telephone inquiries concerning this decision should be directed to the undersigned at (571) 272-3208.

Karen Creasy

Karen Creasy
Petitions Examiner
Office of Petitions

UNITED STATES PATENT AND TRADEMARK OFFICE

Commissioner for Patents
United States Patent and Trademark Office
P.O. Box 1450
Alexandria, VA 22313-1450
www.uspto.gov

JAMES R. THEIN
2231 CRYSTAL DRIVE
SUITE 105
ARLINGTON VA 22202

COPY MAILED

JUN 20 2008

OFFICE OF PETITIONS

In re Application of	:	
Tim Nudo	:	
Application No. 29/206,145	:	DECISION GRANTING PETITION
Filed: May 27, 2004	:	UNDER 37 CFR 1.137(b)
For: EDGE PROTECTOR FOR CARGO	:	

This is a decision on the renewed petition under 37 CFR 1.137(b), filed September 24, 2007, to revive the above-identified application.

The petition is **GRANTED**.

The petition satisfies the conditions for revival pursuant to the provisions of 37 CFR 1.137(b) in that (1) the reply in the form of an executed declaration and terminal disclaimer; (2) the petition fee; and (3) the required statement of unintentional delay have been received. Accordingly, the reply to the Notice of Allowance/Notice of Allowability mailed September 26, 2006, is accepted as having been unintentionally delayed.

Telephone inquiries concerning this decision should be directed to the undersigned at (571) 272-3208.

This application is being referred to the Office of Data Management to be processed into a patent.

Karen Creasy

Karen Creasy
Petitions Examiner
Office of Petitions

UNITED STATES PATENT AND TRADEMARK OFFICE

Commissioner for Patents
United States Patent and Trademark Office
P.O. Box 1450
Alexandria, VA 22313-1450
www.uspto.gov

JUN 17 2005

JEFFER, MANGELS, BUTLER & MARMARO, LLP
1900 AVENUE OF THE STARS, 7TH FLOOR
LOS ANGELES CA 90067

In re Application of	:	
Christjane Burg, et al	:	
Serial No.: 29/206,232	:	**REQUEST FOR EXPEDITED EXAMINATION**
Filed: May 27, 2004	:	
For: Shoe Bottom	:	

This is in response to the Request for expedited examination applicant filed May 27, 2004, to expedite the above-identified application under the provisions of 37 CFR 1.155.

Applicant has satisfied the provisions set forth in 37 CFR 1.155, thus the petition is **GRANTED**.

The application will be forwarded to the examiner for action on the merits commensurate with this decision.

Should there be any questions with regard to this letter please contact John Kittle by letter addressed to the Director, Technology Center 3700/2900, and P.O. BOX 1450 ALEXANDRIA, VA 22313-1450 or by telephone at (703) 308-0873 or by facsimile transmission at (703) 308-3139.

John E. Kittle

John E. Kittle
Director
Technology Center 3700/2900

UNITED STATES PATENT AND TRADEMARK OFFICE

UNITED STATES DEPARTMENT OF COMMERCE
United States Patent and Trademark Office
Address: COMMISSIONER FOR PATENTS
P.O. Box 1450
Alexandria, Virginia 22313-1450
www.uspto.gov

APPL NO.	FILING OR 371 (c) DATE	ART UNIT	FIL FEE REC'D	ATTY.DOCKET NO	DRAWINGS	TOT CLMS	IND CLMS
29/206,232	05/26/2004	2914	170	63584-5125	2	1	1

CONFIRMATION NO. 6239

CORRECTED FILING RECEIPT

OC000000013223373

24574
JEFFER, MANGELS, BUTLER & MARMARO, LLP
1900 AVENUE OF THE STARS, 7TH FLOOR
LOS ANGELES, CA 90067

Date Mailed: 07/13/2004

Receipt is acknowledged of this regular Patent Application. It will be considered in its order and you will be notified as to the results of the examination. Be sure to provide the U.S. APPLICATION NUMBER, FILING DATE, NAME OF APPLICANT, and TITLE OF INVENTION when inquiring about this application. Fees transmitted by check or draft are subject to collection. Please verify the accuracy of the data presented on this receipt. **If an error is noted on this Filing Receipt, please write to the Office of Initial Patent Examination's Filing Receipt Corrections, facsimile number 703-746-9195. Please provide a copy of this Filing Receipt with the changes noted thereon. If you received a "Notice to File Missing Parts" for this application, please submit any corrections to this Filing Receipt with your reply to the Notice. When the USPTO processes the reply to the Notice, the USPTO will generate another Filing Receipt incorporating the requested corrections (if appropriate).**

Applicant(s)

Christjane Burg, Ventura, CA;
Fiona Adams, Santa Barbara, CA;
Peter Huang, Taichung, TAIWAN;

Domestic Priority data as claimed by applicant

This application is a CIP of 29/182,949 06/03/2003
which is a DIV of 29/167,674 09/19/2002 PAT D,483,554

Foreign Applications

If Required, Foreign Filing License Granted: 06/03/2004

Projected Publication Date: None, application is not eligible for pre-grant publication

Non-Publication Request: No

Early Publication Request: No

**** SMALL ENTITY ****

Title

Shoe bottom

Preliminary Class

D02

LICENSE FOR FOREIGN FILING UNDER
Title 35, United States Code, Section 184
Title 37, Code of Federal Regulations, 5.11 & 5.15

GRANTED

The applicant has been granted a license under 35 U.S.C. 184, if the phrase "IF REQUIRED, FOREIGN FILING LICENSE GRANTED" followed by a date appears on this form. Such licenses are issued in all applications where the conditions for issuance of a license have been met, regardless of whether or not a license may be required as set forth in 37 CFR 5.15. The scope and limitations of this license are set forth in 37 CFR 5.15(a) unless an earlier license has been issued under 37 CFR 5.15(b). The license is subject to revocation upon written notification. The date indicated is the effective date of the license, unless an earlier license of similar scope has been granted under 37 CFR 5.13 or 5.14.

This license is to be retained by the licensee and may be used at any time on or after the effective date thereof unless it is revoked. This license is automatically transferred to any related applications(s) filed under 37 CFR 1.53(d). This license is not retroactive.

The grant of a license does not in any way lessen the responsibility of a licensee for the security of the subject matter as imposed by any Government contract or the provisions of existing laws relating to espionage and the national security or the export of technical data. Licensees should apprise themselves of current regulations especially with respect to certain countries, of other agencies, particularly the Office of Defense Trade Controls, Department of State (with respect to Arms, Munitions and Implements of War (22 CFR 121-128)); the Office of Export Administration, Department of Commerce (15 CFR 370.10 (j)); the Office of Foreign Assets Control, Department of Treasury (31 CFR Parts 500+) and the Department of Energy.

NOT GRANTED

No license under 35 U.S.C. 184 has been granted at this time, if the phrase "IF REQUIRED, FOREIGN FILING LICENSE GRANTED" DOES NOT appear on this form. Applicant may still petition for a license under 37 CFR 5.12, if a license is desired before the expiration of 6 months from the filing date of the application. If 6 months has lapsed from the filing date of this application and the licensee has not received any indication of a secrecy order under 35 U.S.C. 181, the licensee may foreign file the application pursuant to 37 CFR 5.15(b).

UNITED STATES PATENT AND TRADEMARK OFFICE

Commissioner for Patents
United States Patent and Trademark Office
P.O. Box 1450
Alexandria, VA 22313-1450
www.uspto.gov

S.J. CHRISTINE YANG
SUITE 101-102
17220 NEWHOPE STREET
FOUNTAIN VALLEY CA 92708

COPY MAILED

AUG 1 2 2004

OFFICE OF PETITIONS

In re Application of	:	
Mei-Lan Tseng	:	
Application No. 29/206,240	:	NOTICE
Filed: May 28, 2004	:	
For: WIRELESS MEDIA PLAYER HOUSING	:	

This is a notice regarding your request for acceptance of a fee deficiency submission under 37 CFR 1.28. On September 1, 1998, the Court of Appeals for the Federal Circuit held that 37 CFR 1.28(c) is the sole provision governing the time for correction of the erroneous payment of the issue fee as a small entity. **See DH Technology v. Synergystex International, Inc. 154 F.3d 1333, 47 USPQ2d 1865 (Fed. Cir. Sept. 1, 1998).**

The Office no longer investigates or rejects original or reissue applications under 37 CFR 1.56. **1098 Off. Gaz. Pat. Office 502 (January 3, 1989).** Therefore, nothing in this Notice is intended to imply that an investigation was done.

Your fee deficiency submission under 37 CFR 1.28 is hereby **ACCEPTED.**

Inquiries related to this communication should be directed to the undersigned at (703) 305-8859.

This file is being referred to Technology Center AU 2912.

Karen Creasy

Karen Creasy
Petitions Examiner
Office of Petitions
Office of the Deputy Commissioner
for Patent Examination Policy

UNITED STATES PATENT AND TRADEMARK OFFICE

Commissioner for Patents
United States Patent and Trademark Office
P.O. Box 1450
Alexandria, VA 22313-1450
www.uspto.gov

RADER FISHMAN & GRAUER PLLC
LION BUILDING
1233 20TH STREET N.W., SUITE 501
WASHINGTON, DC 20036

COPY MAILED

DEC 0 5 2005

OFFICE OF PETITIONS

In re Application of Shintaku :
Application No. 29/206,272 :
Filing Date: May 28, 2004 :
Attorney Docket No. HIR-0026 :

Decision on Petition

This is a decision on the petition under 37 CFR 1.137(b), filed September 2, 2005, to revive the above-identified application.

The petition is **DISMISSED**.

The above-identified application became abandoned for failure to reply in a timely manner to the Notice to File Missing Parts of Application (Notice) mailed July 7, 2004. The Notice set a period for reply of two (2) months from the mail date of the Notice. No extensions of time under the provisions of 37 CFR 1.136(a) were obtained. Accordingly, the above-identified application became abandoned as of midnight on September 7, 2004. A Notice of Abandonment was mailed on March 10, 2005.

A grantable petition under 37 CFR 1.137(b) must be accompanied by a terminal disclaimer and fee if the application was filed on or before June 8, 1995 *or* if the application is a design application.

Since the application is a design application, a terminal disclaimer must be filed. Any request for reconsideration must include a terminal disclaimer. A terminal disclaimer form is enclosed for petitioner's convenience.

Any request for reconsideration must be submitted within TWO (2) MONTHS from the mail date of this decision. No further petition fee is required for the request. Extensions of time under 37 CFR 1.136(a) are permitted. The reconsideration request should include a cover letter entitled "Renewed Petition under 37 CFR 1.137(b)."

Further correspondence with respect to this matter should be addressed as follows:

By mail: Mail Stop Petition
Commissioner for Patents
P.O. Box 1450
Alexandria, VA 22313-1450

By facsimile: (571) 273-8300
Attn: Office of Petitions

By hand: U.S. Patent and Trademark Office
Customer Service Window
Randolph Building
401 Dulany Street
Alexandria, VA 22314

Telephone inquiries regarding this communication should be directed to Petitions Attorney Steven Brantley at (571) 272-3203.

Charles Steven Brantley
Senior Petitions Attorney
Office of Petitions

Attached: PTO/SB/63 Terminal disclaimer form

UNITED STATES PATENT AND TRADEMARK OFFICE

Commissioner for Patents
United States Patent and Trademark Office
P.O. Box 1450
Alexandria, VA 22313-1450
www.uspto.gov

RADER FISHMAN & GRAUER PLLC
LION BUILDING
1233 20TH STREET N.W., SUITE 501
WASHINGTON, DC 20036

COPY MAILED

APR 14 2006

OFFICE OF PETITIONS

In re Application of Shintaku :
Application No. 29/206,272 : Decision on Petition
Filing Date: May 28, 2004 :
Attorney Docket No. HIR-0026 :

This is a decision on the renewed petition under 37 CFR 1.137(b), filed February 10, 2006, to revive the above-identified application.

The petition is **granted**.

The above-identified application became abandoned for failure to reply in a timely manner to the Notice to File Missing Parts of Application (Notice) mailed July 7, 2004. The Notice set a period for reply of two (2) months from the mail date of the Notice. An extension of time under the provisions of 37 CFR 1.136(a) was not obtained. Accordingly, the above-identified application became abandoned as of midnight on September 7, 2004. A Notice of Abandonment was mailed on March 10, 2005.

The instant petition requests revival of the application.

Petitioner has met the requirements to revive the above-identified application pursuant to 37 CFR 1.137(b).[1] Therefore, the petition is granted and the application is revived.

The Office of Initial Patent Examination will be informed of the instant decision so that it may continue to prepare the application for examination.

Telephone inquiries regarding this communication should be directed to Petitions Attorney Steven Brantley at (571) 272-3203.

Charles Steven Brantley
Senior Petitions Attorney
Office of Petitions

[1] 37 CFR 1.137(b)(3) requires "a statement that the entire delay in filing the required reply from the due date for the reply until the filing of a grantable petition pursuant to 37 CFR 1.137(b) [was] unintentional." To the extent any statement of delay in the petition varies from this exact language, the statement will be construed as the equivalent of the statement above. If the entire delay from the date of abandonment, until the date the petition was filed, was not unintentional, petitioner must notify the Office.

UNITED STATES PATENT AND TRADEMARK OFFICE

Commissioner for Patents
United States Patent and Trademark Office
P.O. Box 1450
Alexandria, VA 22313-1450
www.uspto.gov

COPY MAILED
AUG 0 8 2006
OFFICE OF PETITIONS

FAEGRE & BENSON, LLP
PATENT DOCKETING
2200 WELLS FARGO CENTER
90 SOUTH 7TH STREET
MINNEAPOLIS, MN 55402-3901

In re Patent No. D,517,788	:	
Issue Date: March 28, 2006	:	
Application No. 29/206,288	:	NOTICE
Filed: May 28, 2004	:	
Patentee(s): Scott Seamans	:	

This is a notice regarding your request for acceptance of a fee deficiency submission under 37 CFR 1.28, filed March 13, 2006. On September 1, 1998, the Court of Appeals for the Federal Circuit held that 37 CFR 1.28(c) is the sole provision governing the time for correction of the erroneous payment of the issue fee as a small entity. **See DH Technology v. Synergystex International, Inc. 154 F.3d 1333, 47 USPQ2d 1865 (Fed. Cir. Sept. 1, 1998).**

The Office no longer investigates or rejects original or reissue applications under 37 CFR 1.56. **1098 Off. Gaz. Pat. Office 502 (January 3, 1989)**. Therefore, nothing in this Notice is intended to imply that an investigation was done.

Your fee deficiency submission under 37 CFR 1.28 is hereby **ACCEPTED**. Therefore, status as a small entity has been removed.

Inquiries related to this communication should be directed to the undersigned at (571) 272-3226.

Andrea Smith
Petitions Examiner
Office of Petitions

SPE RESPONSE FOR CERTIFICATE OF CORRECTION

Paper No.: _____

DATE : 04/24/06

TO SPE OF : ART UNIT 2915

SUBJECT : Request for Certificate of Correction for Appl. No.: 29/206371 Patent No.: D163360

Please respond to this request for a certificate of correction within 7 days.

Please review the requested changes/corrections as shown in the **COCIN** document(s) in the IFW application image. No new matter should be introduced, nor should the scope or meaning of the claims be changed.

Please complete the response (see below) and forward the completed response to scanning using document code **COCX**.

Certificates of Correction Branch

703-308-9390 ext. 123

Thank You For Your Assistance

The request for issuing the above-identified correction(s) is hereby:

Note your decision on the appropriate box.

- ☑ **Approved** — **All** changes apply.
- ☐ **Approved in Part** — Specify below which changes **do not** apply.
- ☐ **Denied** — State the reasons for denial below.

Comments: _____

SPE — **Art Unit** 2915

OIPE IAP52
APR 17 2006
PATENT & TRADEMARK OFFICE

JACOX, MECKSTROTH & JENKINS

ATTORNEYS AT LAW
PATENT, TRADEMARK & COPYRIGHT MATTERS

LAKEWOOD RANCH
6320 VENTURE DRIVE, STE 104
BRADENTON, FL 34202
TEL: 941-388-9532
FAX: 800-298-7418
E-MAIL: LAW@JMJ.BIZ

SARASOTA
1290 NORTH PALM AVENUE, STE 101
SARASOTA, FL 34236
TEL: 941-954-2112
FAX: 800-298-7418
E-MAIL: LAW@JMJ.BIZ

DOWNTOWN BRADENTON
1205 MANATEE AVENUE WEST
BRADENTON, FL 34205
TEL: 941-747-0339
FAX: 800-298-7418
E-MAIL: LAW@JMJ.BIZ

April 10, 2006

Commissioner of Patents
P.O. Box 1450
Alexandria, VA 22313-1450

Certificate of Mailing

I hereby certify that this correspondence is being deposited with the United States Postal Service as first class mail in an envelope addressed to Attn: Certificate of Corrections Branch, Commissioner for Patents, P.O. Box 1450, Alexandria, VA 22313-1450, on 4-11-06

Rebecca Lantis
Typed or printed name of person mailing paper or fee

Rebecca Lantis
Signature of person mailing paper or fee

Re: U.S. Patent No. D516,360
Issued March 7, 2006
for BASEBALL AREA PROTECTOR
Serial No. 29/206,371
filed May 27, 2004
Docket AFIFL 007 D2

Sir:

The errors noted on the attached Form PTO/SB/44 which occurred during the printing of the patent are thought to be of material importance and a Certificate of Correction is requested pursuant to the procedure for handling certificates of correction.

Applicant previously submitted an Amendment Under 37 CFR 1.312 to correct the error in the description of Fig. 12. The error in Fig. 6 apparently occurred during the printing of the patent. The vertical line in Fig. 6 was removed during printing. Applicant has reviewed the drawings filed with the application and with the Amendment Under 37 CFR 1.312 and respectfully submit that Fig. 6 as filed was correct and no changes to the drawing as filed is being made by this Certificate of Correction.

In view of the above, it is believed that the errors are PTO errors and no fee is believed to be due. The Commissioner is hereby authorized to charge any fees under 37 C.F.R. 1.16 and 1.17 which may be required by this paper, or to credit any overpayment, to Deposit Account No. 50-1287. Enclosed are two completed copies of Form PTO/SB/44 for submitting the certificate of correction to us.

Respectfully submitted,

JACOX, MECKSTROTH & JENKINS

By
Matthew R. Jenkins
Reg. No. 34,844

1205 Manatee Avenue West
Bradenton, FL 34205
941-388-9532
April 10, 2006

APR 20 2006

PTO/SB/44 (04-05)
Approved for use through 04/30/2007. OMB 0651-0033
U.S. Patent and Trademark Office; U.S. DEPARTMENT OF COMMERCE
Under the Paperwork Reduction Act of 1995, no persons are required to respond to a collection of information unless it displays a valid OMB control number.
(Also Form PTO-1050)

UNITED STATES PATENT AND TRADEMARK OFFICE
CERTIFICATE OF CORRECTION

PATENT NO. : D516,360 S

APPLICATION NO.: 29/206,371

ISSUE DATE : March 7, 2006

INVENTOR(S) : William W. Henning

It is certified that an error appears or errors appear in the above-identified patent and that said Letters Patent is hereby corrected as shown below:

On line 25, beginning with the language FIG. 12, delete "8-11" and insert -- 8-10 -- therefor.

In the drawings, Sheet 2, Fig. 6, a generally vertical line should be inserted between the right and left edges.

MAILING ADDRESS OF SENDER (Please do not use customer number below): Matthew R. Jenkins, Esq.
Jacox, Meckstroth & Jenkins
1205 Manatee Avenue West
Bradenton, Florida 34205

This collection of information is required by 37 CFR 1.322, 1.323, and 1.324. The information is required to obtain or retain a benefit by the public which is to file (and by the USPTO to process) an application. Confidentiality is governed by 35 U.S.C. 122 and 37 CFR 1.14. This collection is estimated to take 1.0 hour to complete, including gathering, preparing, and submitting the completed application form to the USPTO. Time will vary depending upon the individual case. Any comments on the amount of time you require to complete this form and/or suggestions for reducing this burden, should be sent to the Chief Information Officer, U.S. Patent and Trademark Office, U.S. Department of Commerce, P.O. Box 1450, Alexandria, VA 22313-1450. DO NOT SEND FEES OR COMPLETED FORMS TO THIS ADDRESS. SEND TO: **Attention Certificate of Corrections Branch, Commissioner for Patents, P.O. Box 1450, Alexandria, VA 22313-1450.**

If you need assistance in completing the form, call 1-800-PTO-9199 and select option 2.

APR 20 2006

UNITED STATES PATENT AND TRADEMARK OFFICE

COMMISSIONER FOR PATENTS
UNITED STATES PATENT AND TRADEMARK OFFICE
P.O. BOX 1450
ALEXANDRIA, VA 22313-1450
www.uspto.gov

Kuo-Ching Chien
7F., No. 213, Civic Boulevard.
Sec. 4
Taipei 105 TW TAIWAN

COPY MAILED

FEB 10 2006

OFFICE OF PETITIONS

In re Application of	:	
Kuo-Ching Chien	:	
Application No. 29/206,383	:	
Filed: May 28, 2004	:	ON PETITION
Title of Invention:	:	
MASSAGING DEVICE	:	

This is a decision on the Renewed Petition to Withdraw the Holding Abandonment Based on Failure to Receive Office Action, filed November 28, 2005. The petition is properly treated under 37 CFR 1.181. The delay in treating this petition is regretted.

The petition is **granted.**

The above-identified application became abandoned for failure to timely reply to the Notice of Allowance and Issue Fee Due and Notice of Allowability, mailed February 18, 2005. The Notices set a non-extendable three (3) month period for reply. No reply having been received, the above-identified application became abandoned May 19, 2005. A Notice of Abandonment was mailed August 22, 2005.

With the instant petition, Petitioner has provided the necessary statements and copies of the docket record where the non-received Notice would have been entered had it been received and docketed. Petitioner has demonstrated by a preponderance of the evidence that the Notice was not received.

In view of the above, the petition is granted.

The Notice of Abandonment is hereby withdrawn.

No petition fee has been charged, and none is due.

The application file is being referred to Publishing Division for re-mailing of the Notice of Allowance and Issue Fee Due and Notice of Allowability.

Telephone inquiries concerning this matter should be directed to the undersigned at (571) 272-3232.

Derek L. Woods
Attorney
Office of Petitions
Office of the Deputy Commissioner
for Patent Examination Policy

UNITED STATES PATENT AND TRADEMARK OFFICE

COMMISSIONER FOR PATENTS
UNITED STATES PATENT AND TRADEMARK OFFICE
P.O. BOX 1450
ALEXANDRIA, VA 22313-1450
www.uspto.gov

Westman,Chaplin & Kelly P.A.
Suite 1400
International Centre
900 Second Avenue South
Minneapolis, MN 55402-3319

COPY MAILED

MAY 12 2006

OFFICE OF PETITIONS

In re Application of	:	
Robert B. Ludlow	:	
Application No. 29/206,384	:	
Filed: May 28, 2004	:	DECISION ON
For: MERCHANDISE TAGGING ARTICLE	:	PETITION

This is a decision in response to the Petition to Withdraw Holding of Abandonment Under 37 CFR 1.181(a), filed April 13, 2006.

This Petition is hereby **granted**.

The above-identified application became abandoned for failure to timely and properly respond to the Office communication, mailed September 1, 2005. The Office action set a shortened statutory period for reply of two (2) months, and provided for extensions of time under 37 CFR 1.136(a). No response having been received, the application became abandoned November 2, 2005. A Notice of Abandonment was mailed March 23, 2006.

Applicant responds with the instant petition wherein Applicant avers that a timely reply was filed on September 14, 2005, and was received by this Office as evidenced by Applicant's return-receipt postcard. In support of this assertion, Applicant provides a copy of a return-receipt postcard acknowledging receipt of, *inter alia*, a Response to Office action mailed September 1, 2005 w/Replacement Sheet #4, (6 drawings) on September 16, 2005. Applicant also re-files a copy of his response, which included a Certificate of Mailing by Applicant certifying that the response was deposited with the United States Postal Service and addressed to this office on September 14, 2006.

"A postcard receipt which itemizes and properly identifies the papers which are being filed serves as prima facie evidence of

receipt in the PTO of all items listed thereon by the PTO." MPEP § 503.

In view of the foregoing, the petition is granted. The holding of abandonment is hereby withdrawn.

No fee has been charged and none is due.

Applicant also re-files a Power of Attorney and Change of Correspondence Address, and asserts that it was properly filed on January 17, 2006, but entry was refused by this office. Applicant is advised that a assignee must establish ownership in an application before being allowed to take action in the application. See 37 CFR 3.73. It is noted that with the re-filed Power of Attorney and Change of Correspondence Address, Applicant has included the appropriate statement under 37 CFR 3.73.

The application will be referred to Technology Center Art Unit 2913 for re-mailing of the Office action.

Telephone inquiries concerning this matter should be directed to the undersigned at (571) 272-3232.

Derek L. Woods
Attorney
Office of Petitions

UNITED STATES PATENT AND TRADEMARK OFFICE

Commissioner for Patents
United States Patent and Trademark Office
P.O. Box 1450
Alexandria, VA 22313-1450
www.uspto.gov

GALLAGHER & KENNEDY, P. A.
2575 E. CAMELBACK RD. #1100
PHOENIX AZ 85016

COPY MAILED

JUN 28 2007

OFFICE OF PETITIONS

In re Application of :
NORMAN A. MURDOCK : DECISION ON PETITION
Application No. 29/206,405 :
Filed: 05/28/2004 :
Attorney Docket No. 16377-0007 :

This is a decision on the petition under 37 CFR 1.137(b), filed January 8, 2007, to revive the above-identified application.

The above-identified application became abandoned for failure to comply with the requirements of the Notice of Allowability, mailed September 20, 2005, which set a three-month statutory period for reply. The above-identified application became abandoned on December 21, 2005. On October 6, 2006, the Office mailed a Notice of Abandonment.

Petitioner has met the requirements to revive the above-identified application pursuant to 37 CFR 1.137(b). Petitioner submitted the required reply and a terminal disclaimer, paid the petition fee, and made the proper statement of unintentional delay. The terminal disclaimer is accepted and has been made of record.

Accordingly, the petition is **granted.**

This matter is being forwarded to the Office of Patent Publication for processing into a patent.

Telephone inquiries concerning the issuance of the application into a patent should be directed to the Office of Patent Publication, Customer Service at (571) 272-4200. Telephone inquiries specific to this decision may be directed to the undersigned at (571) 272-3211.

Christina Tartera Donnell

Christina Tartera Donnell
Senior Petitions Attorney
Office of Petitions

UNITED STATES PATENT AND TRADEMARK OFFICE

Commissioner for Patents
United States Patent and Trademark Office
P.O. Box 1450
Alexandria, VA 22313-1450
www.uspto.gov

AUG 04 2004

John S. Beulick
One Metropolitan Square, Suite 2600
St. Louis MO 63102-2740

In re Application of	:	
Laura Ann Martin	:	
Serial No.: 29/206,423	:	DECISION ON PETITION
Filed: May 28, 2004	:	
For: Container	:	

This is in response to applicants' petition filed June 18, 2004, to make the above-identified application special under the provisions of 37 CFR 1.102(d), based on infringement.

Applicant has satisfied the provisions set forth in M.P.E.P. 708.02, II. Therefore the petition is **GRANTED**.

The application will be forwarded to the examiner for action on the merits commensurate with this decision..

Should there be any questions with regard to this letter please contact John Kittle by letter addressed to the Director, Technology Center 3700/2900, P.O. Box 1450 Alexandria, VA 22313-1450, or by telephone at (703) 308-0873 or by facsimile transmission at (703) 308-3139.

John E. Kittle
Director
Technology Center 3700/2900

UNITED STATES PATENT AND TRADEMARK OFFICE

COMMISSIONER FOR PATENTS
UNITED STATES PATENT AND TRADEMARK OFFICE
P.O. BOX 1450
ALEXANDRIA, VA 22313-1450
www.uspto.gov

FAEGRE & BENSON LLP
PATENT DOCKETING
2200 WELLS FARGO CENTER
90 SOUTH 7TH STREET
MINNEAPOLIS, MN 55402-3901

COPY MAILED
AUG 2 3 2006
OFFICE OF PETITIONS

In re Patent No. D517,789	:	
Issued: March 28, 2006	:	
Application No. 29/206,427	:	NOTICE
Filed: May 28, 2004	:	
Attorney Docket No. 040130-050020US	:	

This is a notice regarding your request for acceptance of a fee deficiency submission under 37 CFR 1.28. On September 1, 1998, the Court of Appeals for the Federal Circuit held that 37 CFR 1.28(c) is the sole provision governing the time for correction of the erroneous payment of the issue fee as a small entity. **See DH Technology v. Synergystex International, Inc. 154 F.3d 1333, 47 USPQ2d 1865 (Fed. Cir. Sept. 1, 1998).**

The Office no longer investigates or rejects original or reissue applications under 37 CFR 1.56. **1098 Off. Gaz. Pat. Office 502 (January 3, 1989)**. Therefore, nothing in this Notice is intended to imply that an investigation was done.

Your fee deficiency submission under 37 CFR 1.28 is hereby **ACCEPTED**.

Inquiries related to this communication should be directed to the Office of Petitions Staff at (571) 272-3282.

Sherry D. Brinkley
Petitions Examiner
Office of Petitions

29 | 2060429

SPE RESPONSE FOR CERTIFICATE OF CORRECTION

DATE : 71807 **Paper No.**: _____

TO SPE OF : ART UNIT 2914-CLARK

SUBJECT : Request for Certificate of Correction on Patent No.: D508133

A response is requested with respect to the accompanying request for a certificate of correction.

Please complete this form and return with file, within **7** days to:
Palm location **7580, Certificates of Correction Branch – South Tower – 9A22**
If response is for an IFW, **return to employee (named below) via PUBSCofC Team in MADRAS.**
With respect to the change(s) requested, correcting Office and/or Applicant's errors, should the patent read as shown in the certificate of correction (COCIN)? No new matter should be introduced, nor should the scope or meaning of the claims be changed.

Thank You For Your Assistance

ATTN: ROCHAUN JOHNSON
Certificates of Correction Branch
Tel. No. 703-308-9390 EXT 119

REQ for Reprint

The request for issuing the above-identified correction(s) is hereby:
Note your decision on the appropriate box.

- ☒ **Approved** — **All** changes apply.
- ☐ **Approved in Part** — Specify below which changes **do not** apply.
- ☐ **Denied** — State the reasons for denial below.

Comments:

_____

_____

_____

_____

_____

SPE _____ Art Unit 2914

UNITED STATES PATENT AND TRADEMARK OFFICE

Commissioner for Patents
United States Patent and Trademark Office
P.O. Box 1450
Alexandria, VA 22313-1450
www.uspto.gov

BERESKIN AND PARR
40 KING STREET WEST
BOX 401
TORONTO ON M5H 3Y2 CA CANADA

COPY MAILED

OCT 26 2005

OFFICE OF PETITIONS

In re Application of	:	
Verbeek et al.	:	
Application No. 29/206,435	:	ON PETITION
Filed: June 1, 2004	:	
Attorney Docket No. 8026-617/DL	:	

This is a decision on the petition under 37 C.F.R. § 1.137(b), filed October 11, 2005, to revive the above-identified application.

The petition is **GRANTED.**

The petition satisfies the conditions for revival pursuant to the provisions of 37 CFR 1.137(b) in that (1) the reply in the form of the balance of the issue fee; (2) the petition fee; (3) the required statement of unintentional delay have been received; and (4) a terminal disclaimer (and requisite fee). Accordingly, the response has been accepted as having been unintentionally delayed.

This matter is being referred to the Publishing Division for processing into a patent.

Telephone inquiries regarding this decision should be directed to the undersigned at (571) 272-3282.

Liana Chase
Petitions Examiner
Office of Petitions

UNITED STATES PATENT AND TRADEMARK OFFICE

Commissioner for Patents
United States Patent and Trademark Office
P.O. Box 1450
Alexandria, VA 22313-1450
www.uspto.gov

FAEGRE & BENSON LLP
3200 WELLS FARGO CENTER
1700 LINCOLIN STREET
DENVER, CO 80203-4532

COPY MAILED
AUG 17 2006
OFFICE OF PETITIONS

In re Patent No. D517790	:	
Issue Date: March 28, 2006	:	
Application No. 29/206,450	:	NOTICE
Filed: May 28, 2004	:	
Attorney Docket No. 040130-050020US		

This is a notice regarding your request for acceptance of a fee deficiency submission under 37 CFR 1.28. On September 1, 1998, the Court of Appeals for the Federal Circuit held that 37 CFR 1.28(c) is the sole provision governing the time for correction of the erroneous payment of the issue fee as a small entity. **See DH Technology v. Synergystex International, Inc. 154 F.3d 1333, 47 USPQ2d 1865 (Fed. Cir. Sept. 1, 1998).**

The Office no longer investigates or rejects original or reissue applications under 37 CFR 1.56. **1098 Off. Gaz. Pat. Office 502 (January 3, 1989)**. Therefore, nothing in this Notice is intended to imply that an investigation was done.

Your fee deficiency submission under 37 CFR 1.28 is hereby **ACCEPTED**.

Inquiries related to this communication should be directed to Irvin Dingle at (571) 272-3210.

Irvin Dingle
Petitions Examiner
Office of Petitions

UNITED STATES PATENT AND TRADEMARK OFFICE

Commissioner for Patents
United States Patent and Trademark Office
P.O. Box 1450
Alexandria, VA 22313-1450
www.uspto.gov

MITCHELL SILBERBERG & KNUPP
11377 WEST OLYMPIC BOULEVARD
LOS ANGELES, CA 90064

COPY MAILED

JAN 19 2005

OFFICE OF PETITIONS

In re Application of	:	
Stephanie Wai Main Shiu	:	
Application No. 29/206,467	:	LETTER
Filed: June 1, 2004	:	
Attorney Docket No. 36797-22	:	

This is a notice regarding your request for acceptance of a fee deficiency submission under 37 CFR 1.28. On September 1, 1998, the Court of Appeals for the Federal Circuit held that 37 CFR 1.28(c) is the sole provision governing the time for correction of the erroneous payment of the issue fee as a small entity. **See DH Technology v. Synergystex International, Inc. 154 F.3d 1333, 47 USPQ2d 1865 (Fed. Cir. Sept. 1, 1998).**

The Office no longer investigates or rejects original or reissue applications under 37 CFR 1.56. **1098 Off. Gaz. Pat. Office 502 (January 3, 1989).** Therefore, nothing in this Notice is intended to imply that an investigation was done.

Your fee deficiency submission under 37 CFR 1.28 is hereby **ACCEPTED.**

Inquiries related to this communication should be directed to Wan Laymon at (571) 272-3220.

This matter is being referred to Publishing Division.

Wan Laymon

Wan Laymon
Petitions Examiner
Office of Petitions
Office of the Deputy Commissioner
for Patent Examination Policy

UNITED STATES PATENT AND TRADEMARK OFFICE

Commissioner for Patents
United States Patent and Trademark Office
P.O. Box 1450
Alexandria, VA 22313-1450
www.uspto.gov

JUL 2 1 2004

PROCOPIO, CORY, HARGREAVES & SAVITCH LLP
530 B STREET
SUITE 2100
SAN DIEGO CA 92101

In re Application of	:	
Shahin Enayati	:	
Serial No.: 29/206,468	:	PETITION DECISION
Filed: June 1, 2004	:	
For: Enclosure For Refuse and Recyclable	:	
Containers	:	

This is in response to the petition applicant filed on June 1, 2004, to make the above-identified application special under the provisions of 37 CFR 1.102(d).

Applicant has satisfied the provisions set forth in M.P.E.P. 708.02, V, thus the petition is **GRANTED**.

The application will be forwarded to the examiner for action on the merits commensurate with this decision.

Should there be any questions with regard to this letter please contact John Kittle by letter addressed to the Director, Technology Center 3700/2900, P.O. Box 1450 Alexandria, VA 22313-1450 or by telephone at (703)308-0873 or by facsimile transmission at (703)308-3139.

John E. Kittle

John E. Kittle
Director
Technology Center 3700/2900

UNITED STATES PATENT AND TRADEMARK OFFICE

Commissioner for Patents
United States Patent and Trademark Office
P.O. Box 1450
Alexandria, VA 22313-1450
www.uspto.gov

MOLLY D MCKAY, PC
3207 E 22ND STREET
TULSA OK 74114-1823

COPY MAILED
SEP 0 8 2004
OFFICE OF PETITIONS

In re Application of
Sandra J. Long
Application No. 29/206,600
Filed: June 1, 2004
Attorney's Docket No. M6470.001

ON PETITION

This decision is in response to the petition filed July 30, 2004, under 37 CFR 1.182 in response to the Notice of Omitted Items mailed July 16, 2004.

The petition is **DISMISSED**.

The application was filed June 1, 2004, however, on July 16, 2004, the Office of Initial Patent Examination mailed a "Notice" stating *inter alia* that the application had been accorded a filing date of June 1, 2004, but that Figure 4 described in the specification appeared to have been omitted.

In response, the present petition was filed. Petitioners explain that no Figures were missing on June 1, 2004. ,

A review of the file reveals that two sheets of drawings with 4 figures was submitted upon filing but that the third figure on page 2 of 2 was not labeled. It is obvious therefore that no drawings were actually missing on June 1, 2004. Rather, the figures were mislabeled, as a result of the applicants' filing error. However, the "Notice" mailed on July 16, 2004, was correct in stating that Figure 4 described in the specification appeared to have been omitted. Therefore, the "Notice" was properly mailed and will not be withdrawn.

The present petition was not necessitated by any error on the part of the Office and the $130.00 petition was required upon filing of the petition. Thus, the $130.00 petition fee will not be refunded.

The application will be processed and examined using the application papers filed on June 1, 2004.

The application is being forwarded to the Office of Initial Patent Examination for further pre-examination, in due course.

Telephone inquiries concerning this matter may be directed to the undersigned Petitions Attorney at (703) 305-4497.

Patricia Faison-Ball

Patricia Faison-Ball
Senior Petitions Attorney
Office of Petitions

UNITED STATES PATENT AND TRADEMARK OFFICE

Commissioner for Patents
United States Patent and Trademark Office
P.O. Box 1450
Alexandria, VA 22313-1450
www.uspto.gov

MOLLY D MCKAY, PC
3207 E 22ND STREET
TULSA OK 74114-1823

COPY MAILED

NOV 30 2004

OFFICE OF PETITIONS

In re Application of
Sandra J. Long
Application No. 29/206,600
Filed: June 1, 2004
Attorney's Docket No. M6470.001

ON PETITION

This decision is in response to the petition filed September 27, 2004, requesting a refund of the petition fee for the petition filed July 30, 2004, which is treated under 37 CFR 1.182.

The petition is **DISMISSED**.

A Notice of Omitted Items mailed July 16, 2004 indicated that Figure 4 appeared to have been omitted. Petitioners filed a petition in response thereof on July 30, 2004 arguing that Page 2 of 2 included 3 Figures and specifically that Figure 4 had not been omitted on June 1, 2004. A review of the file revealed that two sheets of drawings with 4 figures was submitted upon filing but that the third figure on page 2 of 2 was not labeled. It was concluded that no drawings were actually missing on June 1, 2004 but rather that the figures were mislabeled.

The U.S. Patent and Trademark Office (Office) file is the official record of the papers originally filed in this application. Petitioner argues that Figure 4 was in fact labeled as Figure 4. However, while petitioner has the burden of proving that claim, no such proof to substantiate that claim has been proffered and thus, it has to be concluded that the filing error was that of the applicant.

As was indicated in the decision mailed September 8, 2004, page 2 of 2 drawing sheets contains three figures and the third and final figure does not have a label on it. Further, in view of the above, the petition was not necessitated by any error on the part of the Office and the $130.00 petition was required upon filing of the petition. Thus, the $130.00 petition fee will not be refunded.

The application is being forwarded to Technology Center 2912 for examination, in due course.

Telephone inquiries concerning this matter may be directed to the undersigned Petitions Attorney at (571) 272-3212.

Patricia Faison-Ball

Patricia Faison-Ball
Senior Petitions Attorney
Office of Petitions

UNITED STATES PATENT AND TRADEMARK OFFICE

Commissioner for Patents
United States Patent and Trademark Office
P.O. Box 1450
Alexandria, VA 22313-1450
www.uspto.gov

MOLLY D MCKAY, PC
3207 E 22ND STREET
TULSA OK 74114-1823

COPY MAILED

JUN 23 2005

OFFICE OF PETITIONS

In re Application of
Sandra J. Long
Application No. 29/206,600
Filed: June 1, 2004
Attorney's Docket No. M6470.001

ON PETITION

This decision is a reconsideration of petitions filed July 30, 2004 and September 27, 2004, both of which were dismissed and in consideration of a request for a refund for petition fees paid. This review is treated under 37 CFR 1.182.

A Notice of Omitted Items ("Notice") mailed July 16, 2004 indicated that Figure 4 appeared to have been omitted. Petitioners filed a petition in response thereof on July 30, 2004 arguing that upon application, Page 2 of 2 included 3 Figures and specifically that Figure 4 had not been omitted. That petition was dismissed because while 3 figures appeared on page 2 of 2 it didn't appear that Figure 4 had been labeled. A request for a refund was filed September 27, 2004, and was also dismissed since the mislabeling of Figure 4 was not the error of the agency .

Upon further review, however, it appears that the application as filed properly included 4 figures, Figure 1 on page 1 and Figures 2, 3 and 4 on page 2 of the drawings. All the figures were properly labeled. The error was in fact occasioned by the USPTO and has been re-scanned to include the Figure Legend for Figure 4.

In view of the foregoing, the petition is **GRANTED.** The "Notice" was improperly mailed and is hereby withdrawn.

Given the basis for granting the petition, no petition fees are due and petitioner's deposit account no. 13-0470 has been credited in the amount of $130.00 for the petition fee paid July 30, 2004.

This matter is being referred to Technology Center 2913 for examination in due course.

Telephone inquiries concerning this matter may be directed to the undersigned Petitions Attorney at (571) 272-3212.

Patricia Faison-Ball

Patricia Faison-Ball
Senior Petitions Attorney
Office of Petitions

OIPE
NOV 2 3 2004
PATENT & TRADEMARK OFFICE

IFW

PTO/SB/83 (09-04)
Approved for use through 11/30/2005. OMB 0651-0035
U.S. Patent and Trademark Office, U.S. DEPARTMENT OF COMMERCE
Under the Paperwork Reduction Act of 1995, no persons are required to respond to a collection of information unless it displays a valid OMB control number.

REQUEST FOR WITHDRAWAL AS ATTORNEY OR AGENT AND CHANGE OF CORRESPONDENCE ADDRESS

Application Number	29/206,631
Filing Date	May 28, 2004
First Named Inventor	John Graus
Art Unit	2913
Examiner Name	Lucy Jo Lieberman
Attorney Docket Number	F-8468-A

To: Commissioner for Patents
P.O. Box 1450
Alexandria, VA 22313-1450

Approved 7/19/05
JMStone
Jacqueline M. Stone, Director
Technology Center 1700

Please withdraw me as attorney or agent for the above identified patent application, and

- [ ] all the attorneys/agents of record.
- [ ] the attorneys/agents (with registration numbers) listed on the attached paper(s), or
- [x] the attorneys/agents associated with Customer Number 24131

NOTE: This box can only be checked when the power of attorney of record in the application is to all the practitioners associated with a customer number.

The reasons for this request are:

CORRESPONDENCE ADDRESS

1. [ ] The correspondence address is NOT affected by this withdrawal.
2. [x] Change the correspondence address and direct all future correspondence to:

[ ] The address associated with Customer Number:

OR

[x] Firm *or* Individual Name	John Graus				
Address	1527 Dewey Street,				
City	Hollywood	State	Florida	Zip	33020
Country	U.S.A.				
Telephone	954-929-5718			Fax	
Signature					
Name	Ralph E. Locher			Registration No.	41,947
Date	November 17, 2004			Telephone No.	954-925-1100

NOTE: Withdrawal is effective when approved rather than when received. Unless there are at least 30 days between approval of withdrawal and the expiration date of a time period for response or possible extension period, the request to withdrew is normally disapproved.

This collection of information is required by 37 CFR 1.36. The information is required to obtain or retain a benefit by the public which is to file (and by the USPTO to process) an application. Confidentiality is governed by 35 U.S.C. 122 and 37 CFR 1.11 and 1.14. This collection is estimated to take 12 minutes to complete, including gathering, preparing, and submitting the completed application form to the USPTO. Time will vary depending upon the individual case. Any comments on the amount of time you require to complete this form and/or suggestions for reducing this burden, should be sent to the Chief Information Officer, U.S. Patent and Trademark Office, U.S. Department of Commerce, P.O. Box 1450, Alexandria, VA 22313-1450. DO NOT SEND FEES OR COMPLETED FORMS TO THIS ADDRESS. SEND TO: **Commissioner for Patents, P.O. Box 1450, Alexandria, VA 22313-1450.**

If you need assistance in completing the form, call 1-800-PTO-9199 and select option 2.

UNITED STATES PATENT AND TRADEMARK OFFICE

Commissioner for Patents
United States Patent and Trademark Office
P.O. Box 1450
Alexandria, VA 22313-1450
www.uspto.gov

LEYDIG, VOIT & MAYER, LTD.
(SEATTLE OFFICE)
TWO PRUDENTIAL PLAZA
SUITE 4900
CHICAGO IL 60601-6780

COPY MAILED

FEB 0 6 2006

OFFICE OF PETITIONS

In re Application of	:	
Wilgus et al.	:	
Application No. 29/206,632	:	ON PETITION
Filed: June 3, 2004	:	
Attorney Docket No. 307160	:	

This is a decision on the petition under 37 C.F.R. § 1.137(b), filed January 18, 2006, to revive the above-identified application.

The petition is **DISMISSED**.

Any request for reconsideration must be submitted within TWO (2) MONTHS from the mail date of this decision. No further petition fee is required for the request. Extensions of time under 37 CFR 1.136(a) are permitted. The reconsideration request should include a cover letter entitled "Renewed Petition under 37 CFR 1.137(b)." This is **not** a final agency action within the meaning of 5 U.S.C. § 704.

The above-identified application became abandoned for failure to submit formal drawings in a timely manner in reply to the Notice of Allowability mailed July 26, 2005, which set a non-extendable period for reply of three (3) months. Accordingly, the above-identified application became abandoned on October 27, 2005. A Notice of Abandonment was mailed on December 29, 2005.

A grantable petition under 37 CFR 1.137(b) must be accompanied by:
(1) the required reply,[1]
(2) the petition fee,
(3) a statement that the entire delay in filing the required reply from the due date for the reply until the filing of a grantable petition pursuant to 37 CFR 1.137(b) was unintentional, and
(4) a terminal disclaimer and fee if the application was filed on or before June 8, 1995 or if the application is a design application.

Where there is a question as to whether either the abandonment or the delay in filing a petition under 37 CFR 1.137 was unintentional, the Commissioner may require additional information.[2]

---

[1] In a nonprovisional application abandoned for failure to prosecute, the required reply may be met by the filing of a continuing application. In an application or patent, abandoned or lapsed for failure to pay the issue fee or any portion thereof, the required reply must be the payment of the issue fee or any outstanding balance thereof.

The instant petition lacks item (4). Since the instant application is a design application, a terminal disclaimer and fee is required to be submitted with a petition under 37 CFR 1.137(b). A blank form is enclosed for petitioner's convenience.

Further correspondence with respect to this matter should be addressed as follows:

By mail: Mail Stop PETITIONS
Commissioner for Patents
Post Office Box 1450
Alexandria, VA 22313-1450

By hand: Customer Window located at:

U.S. Patent and Trademark Office
Customer Service Window Randolph Building
401 Dulany Street
Alexandria, VA 22314

By fax: (571) 273-8300
ATTN: Office of Petitions

Any questions concerning this matter may be directed to the undersigned at (571) 272-3206.

Liana Chase
Petitions Examiner
Office of Petitions

Enclosure: PTO/SB/62

---

[2] See MPEP 711.03(c)(III)(C) and (D).

UNITED STATES PATENT AND TRADEMARK OFFICE

Commissioner for Patents
United States Patent and Trademark Office
P.O. Box 1450
Alexandria, VA 22313-1450
www.uspto.gov

LEYDIG, VOIT & MAYER, LTD.
(SEATTLE OFFICE)
TWO PRUDENTIAL PLAZA
SUITE 4900
CHICAGO IL 60601-6780

COPY MAILED

MAR 0 8 2006

OFFICE OF PETITIONS

In re Application of	:	
Wilgus et al.	:	
Application No. 29/206,632	:	ON PETITION
Filed: June 3, 2004	:	
Attorney Docket No. 307160	:	

This is a decision on the renewed petition under 37 C.F.R. § 1.137(b), filed March 1, 2006, to revive the above-identified application.

The petition is **GRANTED.**

This matter is being referred to the Publishing Division for processing into a patent.

Telephone inquiries regarding this decision should be directed to the undersigned at (571) 272-3282.

Liana Chase
Petitions Examiner
Office of Petitions

UNITED STATES PATENT AND TRADEMARK OFFICE

COMMISSIONER FOR PATENTS
UNITED STATES PATENT AND TRADEMARK OFFICE
P.O. BOX 1450
ALEXANDRIA, VA 22313-1450
www.uspto.gov

JJGJR.: 09-04

Paper No: __

THE GOODYEAR TIRE & RUBBER COMPANY
DEPARTMENT 823
1144 EAST MARKET STREET
AKRON OH 44316-0001

COPY MAILED
SEP 2 3 2004
OFFICE OF PETITIONS

In re Application of
Poling, et al. :
Application No. 29/206,637 : ON PETITION
Filed: 2 June, 2004 :
Attorney Docket No. DN2004081 :

This is a decision on the petition under ¶(a) of 37 C.F.R. §1.47, filed on 11 August, 2004.

The petition is **DISMISSED**.

NOTES:

(1) Any reply must include a renewed petition (and fee) must include a petition under 37 C.F.R. §1.47 and must be submitted within two (2) months from the mail date of this decision. Extensions of time under 37 C.F.R. §1.136(a) are permitted. The reconsideration request should include a cover letter entitled "Petition under 37 C.F.R. §1.47";

(2) Thereafter, there will be no further reconsideration of this matter

BACKGROUND

The record indicates:

- the application was filed on 2 June, 2004, without, *inter alia*, a fully executed oath or declaration;

- the Office mailed a Notice of Missing Parts (*inter alia*, oath/declaration) on 14 July, 2004, with a response due absent extension of time on or before 14 September, 2004;

- on 11 August, 2004, Petitioner filed, *inter alia*, an oath/declaration signed by co-inventors David Charles Poling (Mr. Poling), Charles Kenneth Schmalix (Mr. Schmalix), Eric John Marazzi (Mr. Marazzi), Randall Raymond Brayer (Mr. Brayer), Robert Allen Losey (Mr. Losey), Walter Dale Allen (Mr. Allen), and Samuel Patrick Landers (Mr. Landers) on behalf of himself and the non-signing inventor Billy Joe Ratliff, Jr. (Mr. Ratliff), and the instant petition (statement/petition by Richard B. O'Planick (Reg. No. 29,096)).

- however, Petitioner does not enclose a copy of the transmittal letter (evidencing transmittal to the non-signing inventor Mr. Ratliff of the entire application (specification: description abstract claims and drawings), and fails to make over signature and registration number the required statement as to the last known address of Mr. Ratliff.

ANALYSIS

The regulations at 37 C.F.R. §1.47 provide in pertinent part:

> **§ 1.47 Filing when an inventor refuses to sign or cannot be reached.**
> (a) If a joint inventor refuses to join in an application for patent or cannot be found or reached after diligent effort, the application may be made by the other inventor on behalf of himself or herself and the non-signing inventor. The oath or declaration in such an application must be accompanied by a petition including proof of the pertinent facts, the fee set forth in § 1.17(h), and the last known address of the non-signing inventor. The non-signing inventor may subsequently join in the application by filing an oath or declaration complying with §1.63.
>
> * * *

The regulations at 37 C.F.R. §1.63 provide in pertinent part:

> **§1.63 Oath or declaration.**
>
> (b) In addition to meeting the requirements of paragraph (a)of this section, the oath or declaration must also:
>
> (1)Identify the application to which it is directed;
>
> (2) State that the person making the oath or declaration has reviewed and understands the contents of the application, Including the claims, as amended by

any amendment specifically referred to in the oath or declaration; and

(3) State that the person making the oath or declaration acknowledges the duty to disclose to the Office all information known to the person to be material to patentability as defined in § 1.56.

Thus, Petitioner must:

- evidence with a copy of the transmittal letter that a copy of the entire application must be sent to the last known address of the non-signing inventor (or the estate representative) with a request that he/she sign the declaration for the patent application;
- state the last known residential address of the non signing inventor; and
- evidence that a reasonable effort was made to ascertain a current or last known address.

Alternatively, an oath or declaration for the patent application in compliance with 37 C.F.R. §§1.63 and 1.64 must be presented.

The declaration must set forth the inventor's residence, citizenship and post office address. An oath or declaration in compliance with 37 C.F.R. §§1.63 and 1.64 signed by the Rule 1.47 applicant is required.[1]

CONCLUSION

The materials submitted thus far clearly evidence that Petitioner provided a copy of the entire application to the non-signing inventor. Moreover, there is no evidence that Petitioner has stated the last known address and further demonstrate that a diligent effort was made to ascertain and inform the Office of the then-current and valid last known postal address of Mr. Ratliff.

Therefore, the instant petition hereby is **dismissed**.

Further correspondence with respect to this matter should be addressed as follows:

[1] See: MPEP 409.03(b).

By mail: (Effective 1 May, 2003)[2]
Commissioner for Patents
P.O. Box 1450
Alexandria, VA 22313-1450

By FAX: IFW Formal Filings
(703) 872-9306
(Effective 28 September, 2004: (571-273-0025)
ATTN.: Office of Petitions

By hand: Mail Stop: Petition
Customer Service Window
Lobby/Room 1B03
Crystal Plaza Two
220 20th Street S.
Arlington, VA 22202

Telephone inquiries regarding this decision should be directed to the undersigned at 703-305-9199.

John J. Gillon, Jr.
Senior Attorney
Office of Petitions

[2] To determine the appropriate addresses for other subject-specific correspondence, refer to the USPTO Web site at www.uspto.gov.

UNITED STATES PATENT AND TRADEMARK OFFICE

COMMISSIONER FOR PATENTS
UNITED STATES PATENT AND TRADEMARK OFFICE
P.O. BOX 1450
ALEXANDRIA, VA 22313-1450
www.uspto.gov

JJGJR.: 12-04

Paper No: __

THE GOODYEAR TIRE
& RUBBER COMPANY
DEPARTMENT 823
1144 EAST MARKET STREET
AKRON OH 44316-0001

COPY MAILED

DEC 09 2004

OFFICE OF PETITIONS

In re Application of
Poling, et al. :
Application No. 29/206,637 : ON PETITION
Filed: 2 June, 2004 :
Attorney Docket No. DN2004081 :

This is a decision on the petition under ¶(a) of 37 C.F.R. §1.47, filed on 22 October, 2004.

The petition is **DISMISSED**.

NOTES:

(1) Any reply must include a renewed petition (and fee) must include a petition under 37 C.F.R. §1.47 and must be submitted within two (2) months from the mail date of this decision. Extensions of time under 37 C.F.R. §1.136(a) are permitted. The reconsideration request should include a cover letter entitled "Petition under 37 C.F.R. §1.47";

(2) Thereafter, there will be no further reconsideration of this matter

BACKGROUND

The record indicates:

- the application was filed on 2 June, 2004, without, *inter alia*, a fully executed oath or

declaration;

- the Office mailed a Notice of Missing Parts (*inter alia*, oath/declaration) on 14 July, 2004, with a response due absent extension of time on or before 14 September, 2004;

- on 11 August, 2004, Petitioner filed, *inter alia*, an oath/declaration signed by co-inventors David Charles Poling (Mr. Poling), Charles Kenneth Schmalix (Mr. Schmalix), Eric John Marazzi (Mr. Marazzi), Randall Raymond Brayer (Mr. Brayer), Robert Allen Losey (Mr. Losey), Walter Dale Allen (Mr. Allen), and Samuel Patrick Landers (Mr. Landers) on behalf of themselves and the non-signing inventor Billy Joe Ratliff, Jr. (Mr. Ratliff), and the original petition (statement/petition by Richard B. O'Planick (Reg. No. 29,096)); however, Petitioner did not enclose a copy of the transmittal letter (evidencing transmittal to the non-signing inventor Mr. Ratliff of the entire application (specification: description abstract claims and drawings), and fails to make over signature and registration number the required statement as to the last known address of Mr. Ratliff. As a result, the original petition was dismissed on 23 September, 2004;

- Petitioner now evidences transmittal to the non-signing inventor Mr. Ratliff of the entire application (specification: description abstract claims and drawings), and Mr. Ratliff's failure to respond thereto.

However, Petitioner fails to make over signature and registration number the required statement as to the last known address of Mr. Ratliff, and the record now contains two different addresses for Mr. Ratliff (to wit: 869 Skyside Drive, Clinton OH 44216 and 5130 Whitlow Court, Commerce Township, MI 48382).

ANALYSIS

The regulations at 37 C.F.R. §1.47 provide in pertinent part:

> **§ 1.47 Filing when an inventor refuses to sign or cannot be reached.**
> (a) If a joint inventor refuses to join in an application for patent or cannot be found or reached after diligent effort, the application may be made by the other inventor on behalf of himself or herself and the non-signing inventor. The oath or declaration in such an application must be accompanied by a petition including proof of the pertinent facts, the fee set forth in § 1.17(h), and the last known address of the non-signing inventor. The non-signing inventor may subsequently join in the application by filing an oath or declaration complying with §1.63.
>
> * * *

The regulations at 37 C.F.R. §1.63 provide in pertinent part:

§1.63 Oath or declaration.

(b) In addition to meeting the requirements of paragraph (a)of this section, the oath or declaration must also:

(1)Identify the application to which it is directed;

(2) State that the person making the oath or declaration has reviewed and understands the contents of the application, Including the claims, as amended by any amendment specifically referred to in the oath or declaration; and

(3) State that the person making the oath or declaration acknowledges the duty to disclose to the Office all information known to the person to be material to patentability as defined in § 1.56.

While Petitioner evidenced with a copy of the transmittal letter that a copy of the entire application must be sent to the last known address of the non-signing inventor (or the estate representative) with a request that he/she sign the declaration for the patent application; Petitioner must:

- **state over Petitioner's signature and registration number the last known residential address of the non signing inventor**; and
- evidence that a reasonable effort was made to ascertain a current or last known address.

Alternatively, an oath or declaration for the patent application in compliance with 37 C.F.R. §§1.63 and 1.64 must be presented.

The declaration must set forth the inventor's residence, citizenship and post office address. An oath or declaration in compliance with 37 C.F.R. §§1.63 and 1.64 signed by the Rule 1.47 applicant is required.[1]

CONCLUSION

The materials submitted thus far clearly evidence that Petitioner provided a copy of the entire application to the non-signing inventor. Moreover, there is no evidence that Petitioner has stated the last known address and further demonstrate that a diligent effort was made to ascertain and inform the Office of the then-current and valid last known postal address of Mr. Ratliff.

---

[1] See: MPEP 409.03(b).

Therefore, the instant petition hereby is **dismissed**.

Further correspondence with respect to this matter should be addressed as follows:

By mail: (Effective 1 May, 2003)[2]
Commissioner for Patents
P.O. Box 1450
Alexandria, VA 22313-1450

By FAX: IFW Formal Filings
(703) 872-9306
(Effective 28 September, 2004: (571-273-0025)
ATTN.: Office of Petitions

By hand: Mail Stop: Petition
Customer Service Window
Lobby/Room 1B03
Crystal Plaza Two
220 20th Street S.
Arlington, VA 22202

Telephone inquiries regarding this decision should be directed to the undersigned at 703-305-9199.

John J. Gillon, Jr.
Senior Attorney
Office of Petitions

[2] To determine the appropriate addresses for other subject-specific correspondence, refer to the USPTO Web site at www.uspto.gov.

UNITED STATES PATENT AND TRADEMARK OFFICE

Commissioner for Patents
United States Patent and Trademark Office
P.O. Box 1450
Alexandria, VA 22313-1450
www.uspto.gov

JJGJR.: 06-05

Paper No: __

THE GOODYEAR TIRE
& RUBBER COMPANY
DEPARTMENT 823
1144 EAST MARKET STREET
AKRON OH 44316-0001

COPY MAILED

JUN 3 0 2005

OFFICE OF PETITIONS

In re Application of
Poling, et al. :
Application No. 29/206,637 : ON PETITION
Filed: 2 June, 2004 :
Attorney Docket No. DN2004081 :

This is a decision on the renewed petition under ¶(a) of 37 C.F.R. §1.47, filed on 13 June, 2005.

The petition is **GRANTED**.

BACKGROUND

The record indicates:

- the application was filed on 2 June, 2004, without, *inter alia*, a fully executed oath or declaration;
- the Office mailed a Notice of Missing Parts (*inter alia*, oath/declaration) on 14 July, 2004, with a response due absent extension of time on or before 14 September, 2004;
- Petitioner filed the original petition on 11 August, 2004 (dismissed on 23 September, 2004), and first renewed petition on 22 October, 2004, with, *inter alia*, an oath/declaration signed by

co-inventors David Charles Poling (Mr. Poling), Charles Kenneth Schmalix (Mr. Schmalix), Eric John Marazzi (Mr. Marazzi), Randall Raymond Brayer (Mr. Brayer), Robert Allen Losey (Mr. Losey), Walter Dale Allen (Mr. Allen), and Samuel Patrick Landers (Mr. Landers) on behalf of themselves and the non-signing inventor Billy Joe Ratliff, Jr. (Mr. Ratliff), and statement/petition by Richard B. O'Planick (Reg. No. 29,096) and evidenced transmittal to the non-signing inventor Mr. Ratliff of the entire application (specification: description abstract claims and drawings) and Mr. Ratliff's failure to respond thereto; however, first renewed petition was dismissed on December, 2004 (as to the required statement as to the last known address of Mr. Ratliff);

- Petitioner now makes, over signature and registration number the required statement as to the last known address of Mr. Ratliff (formerly 869 Skyside Drive, Clinton OH 44216, and now 5130 Whitlow Court, Commerce Township, MI 48382).

The application went abandoned on 9 February, 2005, for failure to reply timely to the 9 December, 2004, decision. The Office mailed a Notice of Abandonment on 8 June, 2005, and contemporaneously with the instant petition, Petitioner filed a petition to revive, alleging unintentional delay, which petition has been addressed under separate cover.

This application and papers have been reviewed and found in compliance with 37 C.F.R. §1.47(a).

This application hereby is **ACCORDED status under 37 C.F.R. §1.47(a)**.

As provided under 37 C.F.R. §1.47(a), the Office will forward notice of this application's filing to the non-signing inventor at the address given in the petition.

Notice of the filing of this application also will be published in the Official Gazette.

This file is being released to OIPE for processing as necessary to reflect the instant decision before being released for examination in due course.

Telephone inquiries concerning this decision may be directed to the undersigned at (571) 272-3214.

John J. Gillon, Jr.
Senior Attorney
Office of Petitions

UNITED STATES PATENT AND TRADEMARK OFFICE

Commissioner for Patents
United States Patent and Trademark Office
P.O. Box 1450
Alexandria, VA 22313-1450
www.uspto.gov

JJGJR.: 06-05

Paper No: __

COPY MAILED

JUN 3 0 2005

OFFICE OF PETITIONS

THE GOODYEAR TIRE
& RUBBER COMPANY
DEPARTMENT 823
1144 EAST MARKET STREET
AKRON OH 44316-0001

In re Application of		
Poling, et al.	:	
Application No. 29/206,637	:	ON PETITION
Filed: 2 June, 2004	:	
Attorney Docket No. DN2004081	:	

This is a decision on the petition filed on 13 June, 2005, under 37 C.F.R. §1.137(b) to revive the application as having been abandoned due to unintentional delay.

The petition is **GRANTED**.

BACKGROUND

The record indicates:

- the application was filed on 2 June, 2004, without, *inter alia*, a fully executed oath or declaration;
- the Office mailed a Notice of Missing Parts (*inter alia*, oath/declaration) on 14 July, 2004, with a response due absent extension of time on or before 14 September, 2004;
- Petitioner filed the original petition on 11 August, 2004 (dismissed on 23 September, 2004), and first renewed petition on 22 October, 2004, with, *inter alia*, an oath/declaration signed by

co-inventors David Charles Poling (Mr. Poling), Charles Kenneth Schmalix (Mr. Schmalix), Eric John Marazzi (Mr. Marazzi), Randall Raymond Brayer (Mr. Brayer), Robert Allen Losey (Mr. Losey), Walter Dale Allen (Mr. Allen), and Samuel Patrick Landers (Mr. Landers) on behalf of themselves and the non-signing inventor Billy Joe Ratliff, Jr. (Mr. Ratliff), and statement/petition by Richard B. O'Planick (Reg. No. 29,096) and evidenced transmittal to the non-signing inventor Mr. Ratliff of the entire application (specification: description abstract claims and drawings) and Mr. Ratliff's failure to respond thereto; however, first renewed petition was dismissed on December, 2004 (as to the required statement as to the last known address of Mr. Ratliff);

- the application went abandoned on 9 February, 2005, for failure to reply timely to the 9 December, 2004, decision;

- the Office mailed a Notice of Abandonment on 8 June, 2005;

- in the instant petition–filed contemporaneously with second renewed petition to the address matters under 37 C.F.R. §1.47(a) and a decision upon which is being mailed under separate cover–Petitioner provides the petition and fee, the reply in the form of the petition under 37 C.F.R. §1.47(a), makes the statement of unintentional delay and submits a terminal disclaimer and fee.

STATUTES, REGULATIONS AND ANALYSIS

Congress has authorized the Commissioner to "revive an application if the delay is shown to the satisfaction of the Commissioner to have been "unavoidable." 35 U.S.C. §133 (1994).[1]

The regulations at 37 C.F.R. §1.137(a) and (b) set forth the requirements for a petitioner to revive a previously unavoidably or unintentionally, respectively, abandoned application under this congressional grant of authority.

The language of 35 U.S.C. §133 and 37 C.F.R. §1.137(a) is clear, unambiguous, and without qualification: the delay in tendering the reply to the outstanding Office action, as well as filing the first petition seeking revival, must have been unavoidable for the reply now to be accepted on

---

[1] 35 U.S.C. §133 provides:
35 U.S.C. §133 Time for prosecuting application.
Upon failure of the applicant to prosecute the application within six months after any action therein, of which notice has been given or mailed to the applicant, or within such shorter time, not less than thirty days, as fixed by the Commissioner in such action, the application shall be regarded as abandoned by the parties thereto, unless it be shown to the satisfaction of the Commissioner that such delay was unavoidable.

petition.[2] Delays in responding properly raise the question whether delays are unavoidable.[3] Where there is a question whether the delay was unavoidable, Petitioners must meet the burden of establishing that the delay was unavoidable within the meaning of 35 U.S.C. §133 and 37 C.F.R. §1.137(a).[4]

And the Petitioner must be diligent in attending to the matter.[5] Failure to do so does not constitute the care required under Pratt, and so cannot satisfy the test for diligence and due care. By contrast, unintentional delays are those that do not satisfy the very strict statutory and regulatory requirements of unavoidable delay, and also, by definition, are not intentional.

Petitioner has satisfied the requirements of 37 C.F.R.§1.137(b).

The terminal disclaimer (with fee) filed on 13 June, 2005, under 37 C.F.R. §1.137(d) has been entered and made of record.

CONCLUSION

Therefore, the instant petition under 37 C.F.R. §1.137(b) hereby is **granted**.

The instant application is released to OIPE for further processing as necessary before being forwarded for examination in due course.

Telephone inquiries concerning this decision may be directed to the undersigned at (571) 272-3214.

John J. Gillon, Jr.
Senior Attorney
Office of Petitions

---

[2] Therefore, by example, an unavoidable delay in the payment of the Filing Fee might occur if a reply is shipped by the US Postal Service, but due to catastrophic accident, the delivery is not made.

[3] See: *Changes to Patent Practice and Procedure; Final Rule Notice*, 62 *Fed. Reg.* at 53158-59 (October 10, 1997), 1203 *Off. Gaz. Pat. Office* at 86-87 (October 21, 1997).

[4] See: In re Application of G, 11 USPQ2d 1378, 1380 (Comm'r Pats. 1989).

[5] See: Diligence in Filing Petitions to Revive and Petitions to Withdraw the Holding of Abandonment, 1124 Off. Gaz. Pat. Office 33 (March 19, 1991). It was and is Petitioner's burden to exercise diligence in seeking either to have the holding of abandonment withdrawn or the application revived. See 1124 Off. Gaz. Pat. Office supra.

UNITED STATES PATENT AND TRADEMARK OFFICE

Commissioner for Patents
United States Patent and Trademark Office
P.O. Box 1450
Alexandria, VA 22313-1450
www.uspto.gov

Paper No.

LERNER AND GREENBERG, PA
P O BOX 2480
HOLLYWOOD, FL 33022-2480

COPY MAILED

FEB 2 4 2005

OFFICE OF PETITIONS

In re Application of	:	
Marc Bundschuh	:	
Application No. 29/206,650	:	DECISION ON PETITION
Filed: June 1, 2004	:	
Attorney Docket No. D-4069	:	

This is in response to the "REPLY TO NOTICE OF INCOMPLETE NONPROVISIONAL APPLICATION, AMENDMENT AND PETITION UNDER 37 C.F.R. § 1.10," filed September 17, 2004. This paper is properly treated as a petition under 37 CFR §1.53(e)(2)[1] to accord the above-identified application a filing date of June 1, 2004.

Application papers in the above-identified application were deposited on June 1, 2004. However, on July 14, 2004, the Initial Patent Examination Division (IPED) mailed a "Notice of Incomplete Nonprovisional Application," notifying applicant that the application papers had not been accorded a filing date because the application was deposited without drawings.

In reply, the instant petition was timely filed. Petitioner asserts that applicant did indeed file the application with drawing sheets 1-7 illustrating Figs. 1-7. In support thereof, petitioner states that a postcard is submitted. However, no postcard is among the items received on petition filed September 17, 2004.

Nonetheless, consideration of petitioner's evidence is unnecessary. A review of the Image File Wrapper for this

[1] §1.53(e)(2) provides that "Any request for review of a notification pursuant to paragraph (e)(1) of this section, or a notification that the original application papers lack a portion of the specification or drawing(s), must be by way of a petition pursuant to this paragraph. ... In the absence of a timely (§1.181(f)) petition pursuant to this paragraph, the filing date of an application in which the applicant was notified of a filing error pursuant to paragraph (e)(1) of this section will be the date the filing error is corrected."

application makes clear that the drawings were present in the application on June 1, 2004, but were mishandled by the Office, and thus, were not included in the original application papers.

Accordingly, the petition is **GRANTED**.

Given the basis for granting the petition, the petition fee is being refunded to Deposit Account No. 12-1099, as authorized.

Accordingly, to the extent that the Notice mailed July 14, 2004 stated that the application was deposited without drawings, the Notice is hereby **vacated**.

However, the executed oath or declaration required by the Notice mailed July 14, 2004, still appears to be outstanding (Payment of the late surcharge is of record). Petitioner is advised that this decision in no way extends the period for reply to the Notice. Thus, this application is subject to abandonment for failure to timely respond.

The Office of Initial Patent Examination (OIPE) has been advised of this decision. The application has, thereby, been forwarded to the Office of Initial Patent Examination (OIPE) for:

- further processing with a filing date of June 1, 2004, using the application papers received in the Office on that date, including seven (7) sheets of drawings shown to have been received in the Office on June 1, 2004;
- indication in Office records that seven (7) sheets of drawings were present on filing; and
- to await a timely response (executed oath or declaration) to Notice mailed July 14, 2004.

Applicant will receive appropriate notifications regarding the fees owed, if any, and other information in due course from OIPE.

Telephone inquiries related to this decision should be directed to the undersigned at 571-272-3219.

Nancy Johnson

Nancy Johnson
Senior Petitions Attorney
Office of Petitions

UNITED STATES PATENT AND TRADEMARK OFFICE

Commissioner for Patents
United States Patent and Trademark Office
P.O. Box 1450
Alexandria, VA 22313-1450
www.uspto.gov

BROOKS KUSHMAN PC
1000 TOWN CENTER
TWENTY-SECOND FLOOR
SOUTHFIELD, MI 48075

COPY MAILED

APR 0 7 2005

OFFICE OF PETITIONS

In re Application of	:
Salve E. Retuta et al	:
Application No. 29/206,662	: DECISION GRANTING PETITION
Filed: June 2, 2004	: UNDER 37 CFR 1.313(c)(3)
Attorney Docket No. CCC1 0104 DUS2	:

This is a decision on the petition under 37 CFR 1.313(c)(3), filed April 7, 2005 to withdraw the above-identified application from issue after payment of the issue fee.

The petition is **GRANTED**.

The above-identified application is hereby withdrawn from issue in favor of a continued prosecution application (CPA) under 37 CFR 1.53(d).

Petitioner is advised that the issue fee paid on March 3, 2005 in the parent application is not refundable nor can it be applied towards any new Notice of Allowance which may issue on the CPA filed April 7, 2005.

Telephone inquiries should be directed to the undersigned at (571) 272-3218.

This matter is being referred to Technology Center AU 2911 for processing of the CPA and appropriate action on the concurrently filed amendment.

Frances Hicks
Petitions Examiner
Office of Petitions
Office of the Deputy Commissioner
for Patent Examination Policy

UNITED STATES PATENT AND TRADEMARK OFFICE

Commissioner for Patents
United States Patent and Trademark Office
P.O. Box 1450
Alexandria, VA 22313-1450
www.uspto.gov

RICHARD M. SACCOCIO, P.A.
100 SE 12TH STREET
FL. LAUDERDALE, FL 33316

COPY MAILED

NOV 30 2005

OFFICE OF PETITIONS

ON PETITION

In re Application of :
Ho Wai Ming et al :
Application No. 29/206,666 :
Filed: June 2, 2004 :
Attorney Docket No. 13.130.2 :

This is a decision on the petition under 37 CFR 1.137(b), filed October 11, 2005, to revive the above-identified application.

The petition is **DISMISSED**.

Any request for reconsideration of this decision must be submitted within TWO (2) MONTHS from the mail date of this decision. Extensions of time under 37 CFR 1.136(a) are permitted. The reconsideration request should include a cover letter entitled "Renewed Petition under 37 CFR 1.137(b)." No additional fee is required with any renewed petition. Petitioner is advised that this is **not** a final agency action decision.

The above-identified application became abandoned for failure to submit the issue fee in a timely manner in reply to the Notice of Allowance and Fee(S) Due mailed October 1, 2004, which set a statutory period for reply of three (3) months. Accordingly, the above-identified application became abandoned on January 4, 2005.

A grantable petition to revive an abandoned application under 37 CFR 1.137(b) must be accompanied by: (1) the required reply (unless previously filed), which may met by the filing of a continuing application in a nonprovisional application abandoned for failure to prosecute, but must be the payment of the issue fee or any outstanding balance thereof in an application or patent, abandoned or lapsed for failure to pay the issue fee or any portion thereof; (2) the petition fee as set forth in 37 CFR 1.17(m); (3) a statement that the entire delay in filing the required reply from the due date for the reply until the filing of a grantable petition pursuant to 37 CFR 1.137(b) was unintentional; and (4) any terminal disclaimer (and fee as set forth in 37 CFR 1.20(d)). This petition lacks item (4) above.

As to item (4), there is no indication that a terminal disclaimer (and fee) has been submitted.

Further correspondence with respect to this matter should be addressed as follows:

By mail: Mail Stop PETITIONS
Commissioner for Patents
Post Office Box 1450
Alexandria, VA 22313-1450

By hand: Customer Service Window
Randolph Building
401 Dulany Street
Alexandria, VA 22314

By fax: (703) 872-9306
ATTN: Office of Petitions

Telephone inquiries concerning this decision should be directed to Wan Laymon at (571) 272-3220.

Wan Laymon
Petitions Examiner
Office of Petitions

UNITED STATES PATENT AND TRADEMARK OFFICE

Commissioner for Patents
United States Patent and Trademark Office
P.O. Box 1450
Alexandria, VA 22313-1450
www.uspto.gov

RICHARD M. SACCOCIO, P.A.
100 SE 12TH STREET
FT. LAUDERDALE, FL 33316

COPY MAILED

FEB 08 2006

OFFICE OF PETITIONS

ON PETITION

In re Application of	:	
Ho Wai Ming et al	:	
Application No. 29/206,666	:	
Filed: June 2, 2004	:	
Attorney Docket No. 13.130.2	:	

This is a decision on the renewed petition under 37 CFR 1.137(b), filed December 5, 2005, to revive the above-identified application.

The petition is **GRANTED**.

The terminal disclaimed filed December 5, 2005 under 37 CFR 1.137(d) has been entered and made of record. Effective September 8, 2000, 37 CFR 1.137(d)(1) has been added to state that a terminal disclaimer filed pursuant to this rule must dedicate to the public a terminal part of the term of any patent granted thereon equivalent to the lesser of: 1) the period of abandonment of the application; or 2) the period extending beyond twenty years from the date on which the application for the patent was filed in the United States, or, if the application contains a specific reference to an earlier filed application(s) under 35 U.S.C. 120, 121 or 365(c), from the date on which the earliest such application was filed. 65 Fed. Reg. 54,674 (2000). Accordingly, the period of the terminal disclaimer filed December 5, 2005 will be equivalent to the lesser of period (1) or (2), as noted above, for this application.

This matter is being referred to Publishing Division.

Telephone inquiries concerning this decision should be directed to Wan Laymon at (571) 272-3220.

Wan Laymon
Petitions Examiner
Office of Petitions

UNITED STATES PATENT AND TRADEMARK OFFICE

Commissioner for Patents
United States Patent and Trademark Office
P.O. Box 1450
Alexandria, VA 22313-1450
www.uspto.gov

BLAKELY SOKOLOFF TAYLOR & ZAFMAN
12400 WILSHIRE BOULEVARD
SEVENTH FLOOR
LOS ANGELES CA 90025-1030

COPY MAILED

MAR 0 3 2005

OFFICE OF PETITIONS

In re Application of
Roman L. Atlass et al.
Application No. 29/206,695
Filed: June 1, 2004
Attorney Docket No. 6012P006

: DECISION REFUSING STATUS
: UNDER 37 CFR 1.47(a)

This is in response to the petition filed under 37 CFR 1.47(a) on January 26, 2005.

The petition is **DISMISSED**.

Rule 47 applicant is given TWO MONTHS from the mailing date of this decision to respond, correcting the below-noted deficiencies. Any response should be entitled "Request for Reconsideration of Petition Under 37 CFR 1.47(a). and may include an oath or declaration executed by the inventor. **Failure to respond will result in abandonment of the application**. Any extensions of time will be governed by 37 CFR 1.136(a).

The above-identified application was filed on June 1, 2004, naming Romain L. Atlass, Cary Horowitz and David Yurman as joint inventors but without an oath or declaration. The instant petition filed with the application, seeks status under 37 CFR 1.47, however and claims that negotiations are ongoing with Mr. Yurman but that at the time of filing, an executed declaration by Mr. Yurman was not available.

A grantable petition under 37 CFR 1.47(a) requires: (1) proof that the non-signing inventor cannot be reached or refuses to sign the oath or declaration after having been presented with the application papers (specification, claims and drawings); (2) an acceptable oath or declaration in compliance with 35 U.S.C. §§ 115 and 116; (3) the petition fee; and (4) a statement of the last known address of the non-signing inventor. Applicant lacks items (1) set forth above.

In regards to item (1), petitioners have not provided sufficient proof that a copy of the complete application (specification, including claims, drawings, if any, and the declaration) was sent to the non-signing inventor, that Mr. Yurman refuses to cooperate with the filing of the application or that after diligent efforts he can't be located.

Based on the facts presented petitioners need to show proof that a copy of the

application was sent or given to the non-signing inventor for review by providing a copy of the cover letter transmitting the application papers to the non-signing inventor or details given in an affidavit or declaration of facts by a person having first hand knowledge of the details.

Likewise, before a *bona fide* refusal can be shown, the non-signing inventor must have been given an opportunity to review the application. Therefore, petitioners must show proof that the non-signing inventor refuses to sign the declaration after being sent or given a copy of the application papers. If there is a written refusal, petitioners should submit a copy of that refusal with any renewed petition. If the refusal was made orally to a person, then that person must provide details of the refusal in an affidavit or declaration of facts.

Further correspondence with respect to this matter should be addressed as follows:

By Mail: Mail Stop PETITIONS
Commissioner for Patents
Post Office Box 1450
Alexandria, VA 22313-1450

By fax: (703) 872-9306
ATTN: Office of Petitions

Telephone inquiries concerning this matter may be directed to the undersigned Petitions Attorney at (571) 272-3212.

Patricia Faison-Ball

Patricia Faison-Ball
Senior Petitions Attorney
Office of Petitions

UNITED STATES PATENT AND TRADEMARK OFFICE

Commissioner for Patents
United States Patent and Trademark Office
P.O. Box 1450
Alexandria, VA 22313-1450
www.uspto.gov

BLAKELY SOKOLOFF TAYLOR & ZAFMAN
12400 WILSHIRE BOULEVARD
SEVENTH FLOOR
LOS ANGELES CA 90025-1030

COPY MAILED

MAY 2 6 2006

OFFICE OF PETITIONS

In re Application of
Romain L. Atlass et al.
Application No. 29/206,695
Filed: June 06, 2004
Attorney Docket No. 6012P006

ON PETITION

This is in response to the request for reconsideration filed July 18, 2005 under 37 CFR 1.47(a) and in response to the petition to revive, filed on even date, under 37 CFR 1.137(b).

A petition under 37 CFR 1.47(a) was filed January 26, 2005 and was dismissed in a decision mailed March 3, 2005 because petitioners had not provided sufficient proof that a complete application had been sent to the non-signing inventor or that diligent efforts had been utilized to locate the non-signing inventor.

A two month period was set for replying to the decision dismissing the petition under 37 CFR 1.47(a). No response having been filed and no extensions of time requested, this application became abandoned.

Comes now petitioner with a declaration signed by the previously non-signing inventor, in compliance with 37 CFR 1.63. In view of the joinder of the inventor, further consideration under 37 CFR 1.47(a) is unnecessary.

The renewed petition filed July 18, 2005, noting joinder, is **DISMISSED** as involving moot issues.

This application does not have any rule 1.47(a) status and no such status should appear on the file wrapper. This application need not be returned to this office for any further consideration under 37 CFR 1.47(a).

In view of the above and as all requirements under 37 CFR 1.137 (b) having been satisfied, including the filing of a terminal disclaimer, the petition to revive is **GRANTED**.

This matter will be referred to the Office of Initial Patent Examination for further pre-examination processing.

Telephone inquiries related to this decision should be directed to the undersigned Petitions Attorney at (571) 272-3212.

Patricia Faison-Ball

Patricia Faison-Ball
Senior Petitions Attorney
Office of Petitions

UNITED STATES PATENT AND TRADEMARK OFFICE

Commissioner for Patents
United States Patent and Trademark Office
P.O. Box 1450
Alexandria, VA 22313-1450
www.uspto.gov

Thomas A. Beck
26 Rockledge Lane
New Milford, CT 06776

COPY MAILED

SEP 15 2006

OFFICE OF PETITIONS

In re Application of

:

Jon A. Prusmack

:

Application No. 29/206,755

Filing Date: June 4, 2004

:

Attorney Docket No.

This is a decision on the petition under 37 CFR §1.137(b), filed May 2, 2006, in the above-identified application.

The petition is **dismissed**.

Any request for reconsideration of this decision must be submitted within TWO (2) MONTHS from the mail date of this decision. Extensions of time under 37 CFR 1.136(a) are permitted. The reconsideration request should include a cover letter entitled "Renewed Petition" under 37 CFR 1.137(b)."

This application became abandoned for failure to respond in a timely manner to the Notice of Allowance and Issue Fee Due mailed January 9, 2006. The notice allowed a statutory period for reply of three months from its mailing date. No reply was received within the allowable period, and the application became abandoned on April 10, 2006.

Effective December 1, 1997, the provisions of 37 CFR 1.137(b) now provide that where the delay in reply was unintentional, a petition may be filed to revive an abandoned application or a lapsed patent pursuant to 37 CFR 1.137(b). A grantable petition pursuant to 37 CFR 1.137(b) must be accompanied by:

(1) the required reply, unless previously filed. In a non-provisional application abandoned for failure to prosecute, the required reply may be met by the filing of a continuing application. In an application or patent, abandoned or lapsed for failure to pay the issue fee, or any portion thereof, the required reply must be the payment of the issue fee or any outstanding balance thereof.

(2) the petition fee as set forth in 37 CFR 1.17(m);

(3) a statement that the entire delay in filing the required reply from the due date for the reply until the filing of a grantable petition pursuant to 37 CFR 1.137(b) was unintentional. The Commissioner may require additional information where there is a question whether the delay was unintentional; and

(4) any terminal disclaimer (and fee set forth in 37 CFR 1.20(d)) required pursuant to 37 CFR 1.137(d).

The instant petition does not satisfy the requirements of item (4) above.

As to item (4), the terminal disclaimer was not found with the petition papers. The subject application is a design application, therefore; a terminal disclaimer is required in order to revive the application. Any renewed petition filed must be accompanied by the completed terminal disclaimer form, which is enclosed for petitioner's convenience. Pursuant to 37 CFR 1.137(d), the terminal disclaimer must dedicate to the public a terminal part of the term of any patent granted from this application that is equivalent to the period of abandonment of the application.

Further correspondence with respect to this matter should be addressed as follows:

By mail: Mail Stop Petitions
Commissioner for Patents
United States Patent and Trademark Office
Box 1450
Alexandria, VA 22313-1450

By facsimile: (571) 273-8300

Telephone inquiries concerning this matter may be directed to the undersigned at (571) 272-3222.

Kenya A. McLaughlin

Kenya A. McLaughlin
Petitions Attorney
Office of Petitions

Enclosure: "Terminal Disclaimer to Accompany Petition"

PTO/SB/63 (07-06)
Approved for use through 09/30/2006. OMB 0651-0031
U.S. Patent and Trademark Office; U.S. DEPARTMENT OF COMMERCE
Under the Paperwork Reduction Act of 1995, no persons are required to a collection of information unless it displays a valid OMB control number.

TERMINAL DISCLAIMER TO ACCOMPANY PETITION

Docket Number (Optional)

In re Application of:

Name:

Application Number:

Filed:

For:

The owner*, _____ of _____ percent interest in the above-identified application hereby disclaims a terminal part of the term of any patent granted the above-identified application equivalent to: (1) if the above-identified application is a design application, the period of abandonment of the above-identified application, and (2) if the above-identified application is a utility or plant application, the lesser of: (a) the period of abandonment of the application; or (b) the period extending beyond twenty years from the date on which the above-identified application was filed in the United States or, if the application contains a specific reference to an earlier filed application(s) under 35 U.S.C. 120, 121, or 365(c), from the date on which the earliest such application was filed. This disclaimer also applies to any patent granted on a utility or plant application filed before June 8, 1995, or a design application, that contains a specific reference under 35 U.S.C. 120, 121, or 365(c) to the above-identified application. This disclaimer is binding upon the grantee, and its successors or assigns.

Check either box 1 or 2 below, if appropriate.

1. ☐ For submissions on behalf of an organization (e.g., corporation, partnership, university, government agency, etc.), the undersigned is empowered to act on behalf of the organization.
2. ☐ The undersigned is an attorney or agent of record. Registration Number_____.

Signature	Date
Typed or Printed Name	Telephone Number

☐ Terminal disclaimer fee under 37 CFR 1.20(d) included.

WARNING: Information on this form may become public. Credit card information should not be included on this form. Provide credit card information and authorization on PTO-2038.

* Statement under 37 CFR 3.73(b) is required if terminal disclaimer is signed by the assignee (owner). Form PTO/SB/96 may be used for making this certification. See MPEP § 324.

This collection of information is required by 37 CFR 1.137. The information is required to obtain or retain a benefit by the public which is to file (and by the USPTO to process) an application. Confidentiality is governed by 35 U.S.C. 122 and 37 CFR 1.11 and 1.14. This collection is estimated to take 12 minutes to complete, including gathering, preparing, and submitting the completed application form to the USPTO. Time will vary depending upon the individual case. Any comments on the amount of time you require to complete this form and/or suggestions for reducing this burden, should be sent to the Chief Information Officer, U.S. Patent and Trademark Office, U.S. Department of Commerce, P.O. Box 1450, Alexandria, VA 22313-1450. DO NOT SEND FEES OR COMPLETED FORMS TO THIS ADDRESS. **SEND TO: Commissioner for Patents, P.O. Box 1450, Alexandria, VA 22313-1450.**

If you need assistance in completing the form, call 1-800-PTO-9199 and select option 2.

Privacy Act Statement

The **Privacy Act of 1974 (P.L. 93-579)** requires that you be given certain information in connection with your submission of the attached form related to a patent application or patent. Accordingly, pursuant to the requirements of the Act, please be advised that: (1) the general authority for the collection of this information is 35 U.S.C. 2(b)(2); (2) furnishing of the information solicited is voluntary; and (3) the principal purpose for which the information is used by the U.S. Patent and Trademark Office is to process and/or examine your submission related to a patent application or patent. If you do not furnish the requested information, the U.S. Patent and Trademark Office may not be able to process and/or examine your submission, which may result in termination of proceedings or abandonment of the application or expiration of the patent.

The information provided by you in this form will be subject to the following routine uses:

1. The information on this form will be treated confidentially to the extent allowed under the Freedom of Information Act (5 U.S.C. 552) and the Privacy Act (5 U.S.C 552a). Records from this system of records may be disclosed to the Department of Justice to determine whether disclosure of these records is required by the Freedom of Information Act.
2. A record from this system of records may be disclosed, as a routine use, in the course of presenting evidence to a court, magistrate, or administrative tribunal, including disclosures to opposing counsel in the course of settlement negotiations.
3. A record in this system of records may be disclosed, as a routine use, to a Member of Congress submitting a request involving an individual, to whom the record pertains, when the individual has requested assistance from the Member with respect to the subject matter of the record.
4. A record in this system of records may be disclosed, as a routine use, to a contractor of the Agency having need for the information in order to perform a contract. Recipients of information shall be required to comply with the requirements of the Privacy Act of 1974, as amended, pursuant to 5 U.S.C. 552a(m).
5. A record related to an International Application filed under the Patent Cooperation Treaty in this system of records may be disclosed, as a routine use, to the International Bureau of the World Intellectual Property Organization, pursuant to the Patent Cooperation Treaty.
6. A record in this system of records may be disclosed, as a routine use, to another federal agency for purposes of National Security review (35 U.S.C. 181) and for review pursuant to the Atomic Energy Act (42 U.S.C. 218(c)).
7. A record from this system of records may be disclosed, as a routine use, to the Administrator, General Services, or his/her designee, during an inspection of records conducted by GSA as part of that agency's responsibility to recommend improvements in records management practices and programs, under authority of 44 U.S.C. 2904 and 2906. Such disclosure shall be made in accordance with the GSA regulations governing inspection of records for this purpose, and any other relevant (*i.e.*, GSA or Commerce) directive. Such disclosure shall not be used to make determinations about individuals.
8. A record from this system of records may be disclosed, as a routine use, to the public after either publication of the application pursuant to 35 U.S.C. 122(b) or issuance of a patent pursuant to 35 U.S.C. 151. Further, a record may be disclosed, subject to the limitations of 37 CFR 1.14, as a routine use, to the public if the record was filed in an application which became abandoned or in which the proceedings were terminated and which application is referenced by either a published application, an application open to public inspection or an issued patent.
9. A record from this system of records may be disclosed, as a routine use, to a Federal, State, or local law enforcement agency, if the USPTO becomes aware of a violation or potential violation of law or regulation.

UNITED STATES PATENT AND TRADEMARK OFFICE

Commissioner for Patents
United States Patent and Trademark Office
P.O. Box 1450
Alexandria, VA 22313-1450
www.uspto.gov

Thomas A. Beck
26 Rockledge Lane
New Milford, CT 06776

COPY MAILED
NOV 20 2006
OFFICE OF PETITIONS

In re Application of

Jon A. Prusmack

Application No. 29/206,755

Filed: June 4, 2004

Attorney Docket No.

DECISION ON PETITION

This is a decision on the renewed petition under 37 CFR 1.137(b), filed October 16, 2006, to revive the above-identified application.

The renewed petition under 37 CFR 1.137(b) is **GRANTED**.

This application became abandoned for failure to respond in a timely manner to the Notice of Allowance and Issue Fee Due mailed May 4, 2005. The notice allowed a statutory period for reply of three months from its mailing date. No reply was received within the allowable period, and the application became abandoned on August 5, 2005. A Notice of Abandonment was mailed on January 9, 2006. A petition under 37 CFR 1.137(b) was filed on May 2, 2006, and dismissed by a decision mailed September 15, 2006.

The terminal disclaimer, filed October 16, 2006, is noted. The Form PTOL-85B is noted as having been received on May 16, 2005.

The application is being forwarded to the Office of Patent Publications for further processing.

Telephone inquiries concerning this decision should be directed to the undersigned at (571) 272-3222.

Kenya A. McLaughlin
Petitions Attorney
Office of Petitions

UNITED STATES PATENT AND TRADEMARK OFFICE

COMMISSIONER FOR PATENTS
UNITED STATES PATENT AND TRADEMARK OFFICE
P.O. BOX 1450
ALEXANDRIA, VA 22313-1450
WWW.USPTO.GOV

Paper No. None

VENABLE, BAETJER, HOWARD AND CIVILETTI, LLP
P.O. BOX 34385
WASHINGTON DC 20043-9998

COPY MAILED

SEP 0 9 2004

OFFICE OF PETITIONS

In re Application of :
Armel Archeny :
Application No. 29/206,761 : DECISION ON PETITION
Filed: June 4, 2004 :
Attorney Docket No.: :
29953-200689 :
Title: PEPPER SHAPED CONTAINER :

This is a decision on the petition filed August 17, 2004, requesting that Figure 10 be accorded a filing date of June 4, 2004, as part of the original disclosure.

The application was deposited on June 4, 2004. However, on July 15, 2004, the Office of Initial Patent Examination (OIPE) mailed a "Notice of Omitted Item(s) in a Nonprovisional Application - Filing Date Granted (notice)", stating that the application had been accorded a filing date, and advising applicants that the application appeared to have been deposited without Figure 10. The notice set a two-month period for response.

In response, on August 17, 2004, applicants filed the present petition. The petition is further accompanied by a copy of Figure 10, along with the petition fee and a copy of applicants' postcard receipt acknowledging receipt of "Formal Drawings (14 Sheets; Figs. 1-14)" in the United States Patent and Trademark Office (Office) on June 4, 2004. Applicants request that Figure 10 be accorded a filing date of June 4, 2004 as part of the original disclosure.

It is noted that 13 sheets of drawings have been located in the electronic file, containing figures 1 - 9 and 11-14.

Upon review of the record, the above-mentioned figure has not been located among the application papers. However, the evidence is convincing that the application papers deposited on June 4, 2004 included Figure 10, and the sheet containing this figure was subsequently misplaced in the Office.

Therefore, the application, including Figure 10, was complete on filing and this figure is entitled to a filing date of June 4, 2004 as part of the original disclosure.

Accordingly, the petition is **GRANTED**.

The notice mailed July 15, 2004 was sent in error, and is hereby **VACATED**. Therefore, no petition fee is necessary. The petition fee of $130 will be refunded to petitioner's Deposit Account.

The application file is being returned to the Office of Initial Patent Examination for further processing with a filing date of June 4, 2004, using the original application papers filed on that date, as well as Figure 10 submitted on August 17, 2004 and for indication in Office records that this figure was present on filing.

Telephone inquiries regarding this decision should be directed to the undersigned at (703) 305-0011. Please note that on approximately September 28, 2004, the Office of Petitions will relocate to the new PTO location in Alexandria. Although the mailing address will remain the same, the general phone number for the Office of Petitions which should be used for status requests will change to 571-272-3282, and the telephone number for the undersigned will change to 571-272-3225.

Paul Shanoski

Paul Shanoski
Senior Attorney
Office of Petitions
United States Patent and Trademark Office

UNITED STATES PATENT AND TRADEMARK OFFICE

Commissioner for Patents
United States Patent and Trademark Office
P.O. Box 1450
Alexandria, VA 22313-1450
www.uspto.gov

GILBERT, KRASS, GROH, SPRINKLE,
ANDERSON & CITKOWSKI, P.C.
280 NORTH OLD WOODWARD - SUITE 400
BRIMINGHAM MI 48009

COPY MAILED
NOV 14 2006
OFFICE OF PETITIONS

In re Application of	:	
Thomas M. Shea	:	
Application No.: 29/206,772	:	DECISION ON
Filing or 371(c) Date: 06/03/2004	:	PETITION
For: WIRE ARM MERCHANDISE DISPLAY	:	

This is a decision in response to the Petition to Withdraw Holding of Abandonment and Waiver of Petition Fee, filed July 7, 2006. The petition is properly treated under 37 CFR 1.181. The delay in treating this petition is regretted.

This Petition is hereby **dismissed**.

Any further petition must be submitted within TWO (2) MONTHS from the mail date of this decision. Extensions of time under 37 CFR 1.136(a) are permitted. The reconsideration request should include a cover letter entitled "Renewed Petition under [insert the applicable code section]." This is **not** final agency action within the meaning of 5 U.S.C. § 704.

The above-identified application became abandoned for failure to timely and properly reply to the Notice of Allowance and Issue Fee Due, mailed February 17, 2006. The Notice set a non-extendable three (3) month period for reply. No reply having been received, the application became abandoned on May 18, 2006. The mailing of this Decision precedes the mailing of a Notice of Abandonment.

Petition under 37 CFR 1.181

Applicant files the instant petition and asserts that the application became abandoned because this office failed to timely record a change of correspondence after having been duly notified thereof. Applicant files as support for this assertion, a copy of the Image File Wrapper which lists a Change of Correspondence Address that was filed on April 24, 2006.

Applicable Law, Rules and MPEP

The MPEP 711.03(c), Petition To Withdraw Holding of Abandonment Based on Evidence That a Reply Was Timely Mailed or Filed, further explains that

Where a certificate of mailing under 37 CFR 1.8, but not a postcard receipt, is relied upon in a petition to withdraw the holding of abandonment, see 37 CFR 1.8(b) and MPEP § 512. As stated in 37 CFR 1.8(b)(3) the statement that attests to the previous timely mailing or transmission of the correspondence must be on a personal knowledge basis, or to the satisfaction of the Director of the USPTO. If the statement attesting to the previous timely mailing is not made by the person who signed the Certificate of Mailing (i.e., there is no personal knowledge basis), then the statement attesting to the previous timely mailing should include evidence that supports the conclusion that the correspondence was actually mailed (e.g., copies of a mailing log establishing that correspondence was mailed for that application). When the correspondence is shown to have been timely filed based on a certificate of mailing, the correspondence is entered into PALM with the actual date of receipt (i.e., the date that the duplicate copy of the papers was filed with the statement under 37 CFR 1.8).

37 CFR 1.8(b) also permits applicant to notify the Office of a previous mailing or transmission of correspondence and submit a statement under 37 CFR 1.8(b)(3) **accompanied by a duplicate copy of the correspondence** when a reasonable amount of time (e.g., more than one month) has elapsed from the time of mailing or transmitting of the correspondence. Applicant does not have to wait until the application becomes abandoned before notifying the Office of the previous mailing or transmission of the correspondence. Applicant should check the private Patent Application Information Retrieval (PAIR) system for the status of the correspondence before notifying the Office. See MPEP § 512.

Analysis

Applicant asserts that this office was timely notified of Applicant's change of correspondence address, but that this Office failed to enter the change of correspondence address until April 24, 2004.

Applicant does not state how this Office was notified of the change of correspondence address (i.e. Express Mail, Certificate of mailing of Facsimile Transmission), nor does Applicant provide a copy of a return-receipt postcard with the petition evidencing receipt of a change of correspondence address.

Conclusion

Applicant has failed to demonstrate that a proper and timely change of correspondence address was filed.

The petition is dismissed without prejudice. Applicant should file a request for reconsideration and include the necessary documentation that demonstrates that a proper and timely change of correspondence address was filed.

Alternative venue

Applicant may alternatively file a petition stating that the delay was unintentional. An "unintentional" petition under 37 CFR 1.137(b) must be accompanied by the required fee, currently $750.00.

The filing of a petition under 37 CFR 1.137(b) cannot be intentionally delayed and therefore must be filed promptly. A person seeking revival due to unintentional delay can not make a statement that the delay was unintentional unless the entire delay, including the delay from the date it was discovered that the application was abandoned until the filing of the petition to revive under 37 CFR 1.137(b), was unintentional. A statement that the delay was unintentional is not appropriate if petitioner intentionally delayed the filing of a petition for revive under 37 CFR 1.137(b).

Further correspondence with respect to this matter should be addressed as follows:

By mail: Commissioner for Patents
PO Box 1450
Alexandria, VA 22313-1450

By FAX: (571) 273-8300
Attn: Office of Petitions

By hand: Customer Service Window
Randolph Building
401 Dulany Street
Alexandria, VA 22314

Telephone inquiries concerning this matter should be directed to the undersigned at (571) 272-3232.

Derek L. Woods
Attorney
Office of Petitions

Cc: GIFFORD, KRASS, GROH,
SPRINKLE & CITKOWSKI, P.C
PO BOX 7021
TROY MI 48007-7021

UNITED STATES PATENT AND TRADEMARK OFFICE

Commissioner for Patents
United States Patent and Trademark Office
P.O. Box 1450
Alexandria, VA 22313-1450
www.uspto.gov

GILBERT, KRASS, GROH, SPRINKLE,
ANDERSON & CITKOWSKI, P.C.
P.O. BOX 7021
TROY MI 48007-7021

COPY MAILED

MAR 2 6 2007

OFFICE OF PETITIONS

In re Application of	:	
Thomas M. Shea	:	
Application No.: 29/206,772	:	DECISION ON
Filing or 371(c) Date: 06/03/2004	:	PETITION
For:WIRE ARM MERCHANDISE DISPLAY	:	

This is a decision in response to the Request for Reconsideration [of] Petition to Withdraw Holding of Abandonment or Alternative Petition to Revive, filed December 14, 2006.

This Petition under 37 CFR 1.181 is **dismissed**.

The petition under 37 CFR 1.137(b) is **granted**.

The above-identified application became abandoned for failure to timely and properly reply to the Notice of Allowance and Issue Fee Due, mailed February 17, 2006. The Notice set a non-extendable three (3) month period for reply. No reply having been received, the application became abandoned on May 18, 2006. The mailing of this Decision precedes the mailing of a Notice of Abandonment.

The July 7, 2006 Petition to withdraw holding of abandonment under 37 CFR 1.181

Applicant filed a petition to withdraw holding of abandonment on July 7, 2006, wherein Applicant asserted that the application became abandoned because this office failed to timely record a change of correspondence after having been duly notified thereof. Applicant filed as support for this assertion, a copy of the Image File Wrapper which lists a Change of Correspondence Address that was filed on April 24, 2006. Applicant had not provided a copy of a change of correspondence address.

The petition was dismissed in a Decision mailed November 14, 2006. The Decision dismissing the petition informed Applicant that a copy of the change of correspondence address was required as noted in MPEP 711.03(c).

The present request for reconsideration

Applicant files the present request for reconsideration and asserts, in relevant part, that a Request for Customer Number Data Change was filed on January 25, 2005. Applicant provides a copy of the Request for Customer Number Data Change, which includes a confirmation of fax receipt.

Applicable Law, Rules and MPEP

The MPEP 711.03(c), Petition To Withdraw Holding of Abandonment Based on Evidence That a Reply Was Timely Mailed or Filed, further explains that

> Where a certificate of mailing under 37 CFR 1.8, but not a postcard receipt, is relied upon in a petition to withdraw the holding of abandonment, see 37 CFR 1.8(b) and MPEP § 512. As stated in 37 CFR 1.8(b)(3) the statement that attests to the previous timely mailing or transmission of the correspondence must be on a personal knowledge basis, or to the satisfaction of the Director of the USPTO. If the statement attesting to the previous timely mailing is not made by the person who signed the Certificate of Mailing (i.e., there is no personal knowledge basis), then the statement attesting to the previous timely mailing should include evidence that supports the conclusion that the correspondence was actually mailed (e.g., copies of a mailing log establishing that correspondence was mailed for that application). When the correspondence is shown to have been timely filed based on a certificate of mailing, the correspondence is entered into PALM with the actual date of receipt (i.e., the date that the duplicate copy of the papers was filed with the statement under 37 CFR 1.8).
>
> 37 CFR 1.8(b) also permits applicant to notify the Office of a previous mailing or transmission of correspondence and submit a statement under 37 CFR 1.8(b)(3) **accompanied by a duplicate copy of the correspondence** when a reasonable amount of time (e.g., more than one month) has elapsed from the time of mailing or transmitting of the correspondence. Applicant does not have to wait until the application becomes abandoned before notifying the Office of the previous mailing or transmission of the correspondence. Applicant should check the private Patent Application Information Retrieval (PAIR) system for the status of the correspondence before notifying the Office. See MPEP § 512.

Analysis

A review of the file reveals that thereafter, on May 20, 2006, Applicant filed a Power of Attorney and Request for New Filing Receipt (date of execution May 18, 2005; Express Mail Label No.: EV615552593US), which listed as the correspondence address the above Birmingham, Michigan address. Applicant asserts that "it was understood that this document would satisfy the requirements of 37 CFR 1.32(c)(3) and the USPTO would then enter the power and associate the application with Customer Number 25006." Applicant filed a copy of the Declaration and Power of Attorney ("Declaration") with the Power of Attorney and Request for New Filing Receipt.

The Declaration also directs correspondence to be sent to the above Birmingham, Michigan address. Nothing in the Power of Attorney and Request for New Filing Receipt, or the Declaration indicated customer number 25006 or the Troy, Michigan correspondence address.

Conclusion

Applicant has failed to demonstrate that the mailing of the Notice of Allowance and issue Fee Due and Notice of Allowability to the Birmingham, Michigan address was an error on the part of this office. Contrariwise, the Notices were mailed in accordance with the correspondence address provided in the Power of Attorney and Request for New Filing Receipt, and the Declaration, filed on May 20, 2005.

The petition to revive under 37 CFR 1.137(b)

Applicant submitted the issue fee on July 7, 2006. Accordingly, the petition is granted.

As noted in the petition, the correspondence address was corrected with the filing of the customer upload on April 24, 2006.

The application is being referred to Publishing Division for processing into a patent.

Telephone inquiries concerning this matter should be directed to the undersigned at (571) 272-3232.

Derek L. Woods
Attorney
Office of Petitions

UNITED STATES PATENT AND TRADEMARK OFFICE

Commissioner for Patents
United States Patent and Trademark Office
P.O. Box 1450
Alexandria, VA 22313-1450
www.uspto.gov

Townsend and Townsend and Crew, LLP
Two Embarcadero Center
Eighth Floor
San Francisco, CA 94111-3834

COPY MAILED

SEP 2 3 2005

OFFICE OF PETITIONS

In re Application of
James S. Sexton
Application No. 29/206,778
Filed: June 2, 2004
Attorney Docket No. 019799-003300US

ON PETITION

This is a decision on the petition filed August 11, 2005 under 37 CFR 1.137(b). Based on the request contained in the petition, it is being treated as a petition to withdraw the abandonment of the above-identified application or in the alternative, to revive the application.

An Ex Parte Quayle Office action was mailed to applicant on January 5, 2005, which set a two (2) month period for reply. Since no reply was received and no extensions of time under the provisions of 37 CFR 1.136 were obtained, the application became abandoned on March 6, 2005.

Petitioner avers that a reply was timely mailed to the Office via certificate of mailing under 37 CFR 1.8 on March 3, 2005. Petitioner has provided a copy of the reply, which contains a certificate of mailing dated March 3, 2005. Petitioner also states that a copy of the return post card with a receipt stamp from the Office dated March 7, 2005, accompanies the petition.[1] In view thereof, petitioner believes the Office erred in holding the application abandoned.

While petitioner has provided a copy of the reply, it is noted that the application number on the reply is incorrectly listed as 29/20<u>3</u>,778, with a strike through the number "3" and a handwritten number "6" over the incorrect digit. A review of patent Application no. 29/203,778 shows that the March 7, 2005 reply is contained therein, but there is no strike through the number "3." It appears that petitioner corrected the application number on the amendment after it was submitted to the Office. Therefore, petitioner's evidence does not support an Office error.

Accordingly, the request to withdraw the holding of abandonment based on Office error is **DISMISSED**.

The petition under 37 CFR 1.137(b) is **GRANTED**.

---

[1] Although petitioner states a copy of the post card receipt is enclosed with the petition, the copy cannot be located.

The petition satisfies the requirements of 37 CFR 1.137(b) in that petitioner has supplied (1) the reply in the form of an amendment; (2) the petition fee of $750[2]; and (3) an adequate statement of unintentional delay.

Telephone inquiries concerning this decision should be directed to the undersigned at (571) 272-3223.

The application file is being referred to Technology Center 2900.

Marianne E. Jenkins
Petitions Examiner
Office of Petitions

[2] The fee required for filing a petition under 37 CFR 1.137(b) is $750, not $250 as petitioner states. In view of the authorization to charge any additional fees required, the $750 unintentional petition fee will be charged to petitioner's deposit account in due course.

UNITED STATES PATENT AND TRADEMARK OFFICE

Commissioner for Patents
United States Patent and Trademark Office
P.O. Box 1450
Alexandria, VA 22313-1450
www.uspto.gov

PEARL COHEN ZEDEK LATZER, LLP
1500 BROADWAY 12TH FLOOR
NEW YORK NY 10036

COPY MAILED

JUL 12 2007

OFFICE OF PETITIONS

In re Application of	:	
Shifris, Pinhas	:	
Application No. 29/206,834	:	ON PETITION
Filed: June 2, 2004	:	
Attorney Docket No. D-0432-US	:	

This is a decision on the petition under 37 C.F.R. § 1.137(b), filed June 6, 2007, to revive the above-identified application.

The petition is **GRANTED.**

The petition satisfies the conditions for revival pursuant to the provisions of 37 CFR 1.137(b) in that (1) the reply in the form of a Continued Prosecution Application (CPA); (2) the petition fee; (3) the required statement of unintentional delay; and (4) a terminal disclaimer and fee have been received. Accordingly, the response has been accepted as having been unintentionally delayed.

35 U.S.C. 41(a)(7) and 151 each require payment of the issue fee as a condition of reviving an application abandoned or patent lapsed for failure to pay the issue fee. Therefore, the filing of a continuing application without payment of the issue fee or any outstanding balance thereof is not an acceptable reply in an application abandoned for failure to pay the issue fee or any portion thereof. However, petitioner did give authorization to charge any fees required under 37 CFR 1.18. The $400.00 issue fee will be charged to petitioner's deposit account.

Petitioner is advised that, once submitted, the issue fee cannot be refunded. If, however, this application is again allowed, petitioner may request that it be applied towards the issue fee required by the new Notice of Allowance.[1]

This matter is being referred to Technology Center 2900 for further processing.

Telephone inquiries regarding this decision should be directed to the undersigned at (571) 272-3206.

Liana Walsh
Petitions Examiner
Office of Petitions

---

[1] *The request to apply the issue fee to the new Notice may be satisfied by completing and returning the new Part B – Fee(s) Transmittal Form (along with any balance due at the time of submission). Petitioner is advised that the Issue Fee Transmittal Form* ***must*** *be completed and timely submitted to avoid abandonment of the application.*

UNITED STATES PATENT AND TRADEMARK OFFICE

Commissioner for Patents
United States Patent and Trademark Office
P.O. Box 1450
Alexandria, VA 22313-1450
www.uspto.gov

GREER, BURNS & CRAIN
300 S WACKER DR
25TH FLOOR
CHICAGO, IL 60606

COPY MAILED

SEP 29 2006

OFFICE OF PETITIONS

In re Application of	:	
Thomas S. Riccobene	:	
Application No. 29/206,883	:	ON PETITION
Filed: June 4, 2004	:	
Attorney Docket Number:	:	
1825.70155	:	

This is a decision on the petition under 37 C.F.R. 1.137(b), filed December 9, 2005, to revive the above-identified application. The delay in treating this petition is regretted.

This application became abandoned for failure to timely and properly reply to the Notice of Allowance and Issue Fee Due and Notice of Allowability, mailed March 24, 2005. The Notices set a non-extendable statutory period of three months for reply.

Applicant filed a Request for Continued Examination ("RCE") on June 23, 2005; however, a RCE is not applicable to Design Applications. Applicant was so notified in a Notice of Improper RCE and in a Supplemental Notice of Allowability, both mailed October 13, 2005.

No complete and proper reply having been received, this application became abandoned on June 25, 2005. The mailing of this Decision precedes the mailing of a Notice of Abandonment.

Applicant files the instant petition and Continued Prosecution Application ("CPA").

Having found that all requirements for the filing of a grantable petition under 37 C.F.R. §1.137(b) have been met, this Petition is hereby **Granted**.

This application is being referred to Technology Center Art Unit 2914 for continued prosecution in due course.

Telephone inquiries concerning this matter should be directed to the undersigned at 571-272-3232.

Derek L. Woods
Attorney
Office of Petitions

UNITED STATES PATENT AND TRADEMARK OFFICE

COMMISSIONER FOR PATENTS
UNITED STATES PATENT AND TRADEMARK OFFICE
P.O. BOX 1450
ALEXANDRIA, VA 22313-1450
www.uspto.gov

DOUGHERTY CLEMENTS
1901 ROXBOROUGH ROAD
SUITE 300
CHARLOTTE, NC 28211

COPY MAILED

NOV 09 2006

OFFICE OF PETITIONS

In re Application of	:	
Dwayne E. Welch	:	
Application No. 29/206,884	:	ON PETITION
Filed: June 4, 2004	:	
Attorney Docket No. 3998	:	

This is a decision on the petition under 37 CFR 1.137(b), filed on September 12, 2006, to revive the above-identified application.

The petition is **DISMISSED**.

The above-identified application became abandoned for failure to timely respond to the Notice of Allowance and Fee(s) Due mailed October 14, 2004. A Notice of Abandonment was mailed on March 14, 2005.

A grantable petition under 37 CFR 1.137(b) must be accompanied by: (1) the required reply, unless previously filed; (2) the petition fee as set forth in 37 CFR 1.17(m); (3) a statement that the entire delay in filing the required reply from the due date for the reply until the filing of a grantable petition pursuant to 37 CFR 1.137(b) was unintentional; and (4) any terminal disclaimer (and fee as set forth in 37 CFR 1.20(d)) required by 37 CFR 1.137(d). Where there is a question as to whether either the abandonment or the delay in filing a petition under 37 CFR 1.137 was unintentional, the Commissioner may require additional information. See MPEP 711.03(c)(III)(C) and (D). The instant petition lacks item(s) (4).

The Office acknowledges receipt of $750 for the instant petition, $400 for payment of the issue fee and $10 for thirty (30) advance order soft copies submitted on September 12, 2006. However, a Terminal Disclaimer and the $65 Terminal Disclaimer fee is required under 37 CFR 1.137(d) if the application is: (1) a design application, (2) a utility application filed before June 8, 1995, or (3) a plant application filed before June 8, 1995. The Terminal Disclaimer must dedicate to the public a terminal part of the term of any patent granted the application equivalent to the period of abandonment of the application, and must also apply to any patent granted on any

application containing a specific reference under 35 U.S.C. 120, 121 or 365(c) to the application for which revival is sought. Therefore, this application cannot be revived until a Terminal Disclaimer and $65 fee have been submitted.

Any request for reconsideration of this decision must be submitted within **TWO (2) MONTHS** from the mail date of this decision. Extensions of time under 37 CFR 1.136(a) are permitted. The reconsideration request should include a cover letter entitled "Renewed Petition under 37 CFR 1.137(b), and be accompanied by the required Terminal Disclaimer and $65 fee." This is **not** a final agency action within the meaning of 5 U.S.C. § 704.

Further correspondence with respect to this matter should be addressed as follows:

By Mail: Mail Stop PETITION
Commissioner for Patents
P. O. Box 1450
Alexandria, VA 22313-1450

By hand: U. S. Patent and Trademark Office
Customer Service Window, Mail Stop Petitions
Randolph Building
401 Dulany Street
Alexandria, VA 22314

The centralized facsimile number is **(571) 273-8300.**

Telephone inquiries concerning this decision should be directed to the undersigned at (571) 272-3226.

Andrea Smith
Petitions Examiner
Office of Petitions

UNITED STATES PATENT AND TRADEMARK OFFICE

Commissioner for Patents
United States Patent and Trademark Office
P.O. Box 1450
Alexandria, VA 22313-1450
www.uspto.gov

DOUGHERTY CLEMENTS
1901 ROXBOROUGH ROAD
SUITE 300
CHARLOTTE, NC 28211

COPY MAILED
NOV 24 2006
OFFICE OF PETITIONS

In re Application of	:	
Dwayne E. Welch	:	
Application No. 29/206,884	:	ON PETITION
Filed: June 4, 2004	:	
Attorney Docket No. 3998	:	

This is a decision on the communication filed on November 16, 2006, which is being treated as a renewed petition under 37 CFR 1.137(b), to revive the above-identified application.

The petition now satisfies the requirements of 37 CFR 1.137(b), in that, petitioner has supplied the required terminal disclaimer and $65 fee. Also, the Office acknowledges receipt of $400 for payment of the issue fee; the petition fee of $750; an adequate statement of unintentional delay and $30 for ten (10) advance soft copies, submitted on September 12, 2006.

In view of the above, the petition is **GRANTED**.

This application file is being referred to the Office of Publications for further processing into a patent.

Telephone inquiries concerning this decision should be directed to the undersigned at (571) 272-3226.

Andrea Smith
Petitions Examiner
Office of Petitions

UNITED STATES PATENT AND TRADEMARK OFFICE

OFFICE

COPY MAILED

JUN 0 7 2005

Director's Office
Office of Patent Publication

MARK MONTAGUE
COWAN, LIEBOWITZ & LAMAN
1133 AVENUE OF THE AMERICAS
NEW YORK, NY 10036-6799

In re Application of
HA, HANNA
Application No. 29/206,919
Filed: June 4, 2004
Attorney Docket No. 25714-000

DECISION ON PETITION

This is a decision on the Petition Under 37 CFR § 1.181, 1,182, 1.137(a) or 1.137(b) To Withdraw Holding Of Abandonment, received in the United States Patent and Trademark Office (USPTO) via facsimile transmission on March 18, 2005. The Petition is being treated as a Petition To Withdraw Holding Of Abandonment Under 37 CFR § 1.181.

The petition is **GRANTED**

The application was held abandoned for failure to timely pay the issue fee as required in the Notice of Allowance and Fee(s) Due, mailed on September 21, 2004, which set a three (3) month statutory period for reply. A Notice of Abandonment was mailed on February 17, 2005

The Office acknowledges the timely receipt of the Transmittal, which is present in the application file, on November 5, 2004 by the "Office Date" stamp receipt thereon. The Transmittal authorized that the issue fee be charged to the Deposit Account. However, the Deposit Account Number was not included on the Transmittal.

Petitioner acknowledges that the deposit account number was not supplied. Petitioner further states that the Applicant's transmittal date June 4, 2004 provided the attorney's deposit account (03-3415) and checked off the box that indicated " Charge any additional fee(s) or any underpayment of fee(s)."

The rules as amended provided a safely mechanism where it is clear that an applicant intended to pay the issue fee. In this regard, 37 CFR 1.311(b)(1) and (b)(2) provides that, where an applicant intends to pay the issue fee by submission of either an incorrect fee or a completed Office-provided issue fee transmittal form (where no issue fee has been submitted), a general authorization to pay fees or a specific authorization to pay the issue, submitted prior to the mailing of a notice of allowance, will be allowed to act as payment of the correct fee.

In view of the previously filed authorization and since it was clearly applicant's intention to pay the issue fee the holding of abandonment is hereby withdrawn.

§ 1.311 Notice of Allowance

(b) An authorization to charge the issue fee or other post-allowance fees set forth in § 1.18 to a deposit account may be filed in an individual application only after mailing of the notice of allowance. The submission of either of the following after the mailing of a notice of allowance will operate as a request to charge the correct issue fee to any deposit account identified in a previously filed authorization to charge fee:

(1) An incorrect issue fee: or

(2) A completed Office-provided issue fee transmittal form (where no issue fee has been submitted).

[47 FR 41279, Sept. 17, 1982, effective Oct. 1, 1982: para. (b) revised, 65 FR 54604, Sept 8, 2000, effective Nov. 7, 2000: revised, 65 FR 57024, Sept. 20, 2000, effective Nov. 29, 2000]

The term "such" is added before "fees" in the last line of section § 1.311(b). Also, last sentence of § 1.311(b)(2) is changed to "A fee transmittal form (or letter) for payment of issue fee or publication fee. See ... para. (b) revised, , 69 FR 56481, Sept. 21, 2004, effective Sept. 21, 2004]

As authorized, the issue fee in the amount of $245 was charged to Deposit Account No. 03-3415.

The application will be forwarded to the Publishing Division to be processed into a patent.

Telephone inquires relating to this matter may be directed to the undersigned in the Office of Patent Publication at 703-308-9250.

Thomas Hawkins

Thomas Hawkins
Paralegal Specialist
Office of the Director
Office of Patent Publication

OIPE JC101 NOV 0 5 2004 PATENT & TRADEMARK OFFICE

PART B - FEE(S) TRANSMITTAL

Complete and send this form, together with applicable fee(s), to: Mail Mail Stop ISSUE FEE
Commissioner for Patents
P.O. Box 1450
Alexandria, Virginia 22313-1450
or Fax (703) 746-4000

INSTRUCTIONS: This form should be used for transmitting the ISSUE FEE and PUBLICATION FEE (if required). Blocks 1 through 5 should be completed where appropriate. All further correspondence including the Patent, advance orders and notification of maintenance fees will be mailed to the current correspondence address as indicated unless corrected below or directed otherwise in Block 1, by (a) specifying a new correspondence address; and/or (b) indicating a separate "FEE ADDRESS" for maintenance fee notifications.

CURRENT CORRESPONDENCE ADDRESS (Note: Use Block 1 for any change of address)

7590 09/21/2004

Mark Montague
Cowan, Liebowitz & Latman
1133 Avenue of the Americas
New York, NY 10036-6799

Note: A certificate of mailing can only be used for domestic mailings of the Fee(s) Transmittal. This certificate cannot be used for any other accompanying papers. Each additional paper, such as an assignment or formal drawing, must have its own certificate of mailing or transmission.

Certificate of Mailing or Transmission
I hereby certify that this Fee(s) Transmittal is being deposited with the United States Postal Service with sufficient postage for first class mail in an envelope addressed to the Mail Stop ISSUE FEE address above, or being facsimile transmitted to the USPTO (703) 746-4000, on the date indicated below.

Mark Montague (Depositor's name)
(Signature)
November 5, 2004 (Date)

APPLICATION NO.	FILING DATE	FIRST NAMED INVENTOR	ATTORNEY DOCKET NO.	CONFIRMATION NO.
29/206,919	06/04/2004	Hanna Ha	25714-000	4778

TITLE OF INVENTION: TODDLER CRAYON

APPLN. TYPE	SMALL ENTITY	ISSUE FEE	PUBLICATION FEE	TOTAL FEE(S) DUE	DATE DUE
nonprovisional	YES	~~$240~~ 245	50	~~$240~~ 245	12/21/2004

EXAMINER	ART UNIT	CLASS SUBCLASS
HOLTJE, MARTHA K	2913	D19-046000

1. Change of correspondence address or indication of "Fee Address" (37 CFR 1.363).
☐ Change of correspondence address (or Change of Correspondence Address form PTO/SB/122) attached.
☐ "Fee Address" indication (or "Fee Address" Indication form PTO/SB/47; Rev 03-02 or more recent) attached. Use of a Customer Number is required.

2. For printing on the patent front page, list
(1) the names of up to 3 registered patent attorneys or agents OR, alternatively,
(2) the name of a single firm (having as a member a registered attorney or agent) and the names of up to 2 registered patent attorneys or agents. If no name is listed, no name will be printed.

1 Cowan, Liebowitz & Latman P.C.
2 Mark Montague
3

3. ASSIGNEE NAME AND RESIDENCE DATA TO BE PRINTED ON THE PATENT (print or type)
PLEASE NOTE: Unless an assignee is identified below, no assignee data will appear on the patent. If an assignee is identified below, the document has been filed for recordation as set forth in 37 CFR 3.11. Completion of this form is NOT a substitute for filing an assignment.

(A) NAME OF ASSIGNEE (B) RESIDENCE: (CITY and STATE OR COUNTRY)

Please check the appropriate assignee category or categories (will not be printed on the patent): ☐ Individual ☐ Corporation or other private group entity ☐ Government

4a. The following fee(s) are enclosed:
☒ Issue Fee
☐ Publication Fee (No small entity discount permitted)
☒ Advance Order - # of Copies

4b. Payment of Fee(s):
☒ A check in the amount of the fee(s) is enclosed.
☐ Payment by credit card. Form PTO-2038 is attached.
☒ The Director is hereby authorized by charge the required fee(s), or credit any overpayment, to Deposit Account Number (enclose an extra copy of this form).

5. Change in Entity Status (from status indicated above)
☒ a. Applicant claims SMALL ENTITY status. See 37 CFR 1.27. ☐ b. Applicant is no longer claiming SMALL ENTITY status. See 37 CFR 1.27(g)(2).

The Director of the USPTO is requested to apply the Issue Fee and Publication Fee (if any) or to re-apply any previously paid issue fee to the application identified above.
NOTE: The Issue Fee and Publication Fee (if required) will not be accepted from anyone other than the applicant; a registered attorney or agent; or the assignee or other party in interest as shown by the records of the United States Patent and Trademark Office.

Authorized Signature Date November 5, 2004
Typed or printed name Mark Montague Registration No. 36,612

This collection of information is required by 37 CFR 1.311. The information is required to obtain or retain a benefit by the public which is to file (and by the USPTO to process) an application. Confidentiality is governed by 35 U.S.C. 122 and 37 CFR 1.14. This collection is estimated to take 12 minutes to complete, including gathering, preparing, and submitting the completed application form to the USPTO. Time will vary depending upon the individual case. Any comments on the amount of time you require to complete this form and/or suggestions for reducing this burden, should be sent to the Chief Information Officer, U.S. Patent and Trademark Office, U.S. Department of Commerce, P.O. Box 1450, Alexandria, Virginia 22313-1450. DO NOT SEND FEES OR COMPLETED FORMS TO THIS ADDRESS. SEND TO: Commissioner for Patents, P.O. Box 1450, Alexandria, Virginia 22313-1450.
Under the Paperwork Reduction Act of 1995, no persons are required to respond to a collection of information unless it displays a valid OMB control number.

PAGE 3/3 * RCVD AT 11/5/2004 2:55:55 PM [Eastern Standard Time] * SVR:USPTO-EFXRF-2/0 * DNIS:7464000 * CSID: * DURATION (mm-ss):01-50

06/07/2005 DTERRY 00000024 033725
01 FC:2502 245.00 OP

UNITED STATES PATENT AND TRADEMARK OFFICE

Commissioner for Patents
United States Patent and Trademark Office
P.O. Box 1450
Alexandria, VA 22313-1450
www.uspto.gov

AUG 06 2004

Richard C. Litman
LITMAN LAW OFFICES, LTD.
P.O. Box 15035
Arlington VA 22215

In re Application of	:	
Neal D. Setcer, Jr.	:	
Serial No.: 29/206,947	:	DECISION ON PETITION
Filed: June 8, 2004	:	
For: Coin Tube Organizer	:	

This is in response to applicants' petition filed June 8, 2004, to make the above-identified application special under the provisions of 37 CFR 1.102(c), based on the age of the applicant.

Applicant has satisfied the provisions set forth in M.P.E.P. 708.02, IV. Therefore the petition is **GRANTED.**

The application will be forwarded to the examiner for action on the merits commensurate with this decision..

Should there be any questions with regard to this letter please contact John Kittle by letter addressed to the Director, Technology Center 3700/2900, P.O. Box 1450 Alexandria, VA 22313-1450, or by telephone at (703) 308-0873 or by facsimile transmission at (703) 308-3139.

John E. Kittle

John E. Kittle
Director
Technology Center 3700/2900

UNITED STATES PATENT AND TRADEMARK OFFICE

Commissioner for Patents
United States Patent and Trademark Office
P.O. Box 1450
Alexandria, VA 22313-1450
www.uspto.gov

AUG 06 2004

BANNER & WITCOFF
1001 G STREET N W
SUITE 1100
WASHINGTON DC 20001

In re Application of	:	
Carl L. Madore	:	
Serial No.: 29/206,959	:	DECISION ON PETITION
Filed: June 8, 2004	:	
For: Portion of a Golf Club Head	:	

This is in response to the petition applicant filed on July 9, 2004 to make the above-identified application special under the provisions of 37 CFR 1.102(d).

Applicant has satisfied the provisions set forth in M.P.E.P. 708.02, VIII, thus the petition is **GRANTED**.

The application will be forwarded to the examiner for action on the merits commensurate with this decision.

Should there be any questions with regard to this letter please contact John Kittle by letter addressed to the Director, Technology Center 3700/2900, P.O. Box 1450 Alexandria, VA 22313-1450, or by telephone at (703) 308-0873 or by facsimile transmission at (703) 308-3139.

John E. Kittle
Director
Technology Center 3700/2900

UNITED STATES PATENT AND TRADEMARK OFFICE

Commissioner for Patents
United States Patent and Trademark Office
P.O. Box 1450
Alexandria, VA 22313-1450
www.uspto.gov

AUG 06 2004

BANNER & WITCOFF
1001 G STREET N W
SUITE 1100
WASHINGTON DC 20001

In re Application of	:	
Carl L. Madore	:	
Serial No.: 29/206,960	:	DECISION ON PETITION
Filed: June 8, 2004	:	
For: Portion of a Golf Club Head	:	

This is in response to the petition applicant filed on July 9, 2004 to make the above-identified application special under the provisions of 37 CFR 1.102(d).

Applicant has satisfied the provisions set forth in M.P.E.P. 708.02, VIII, thus the petition is **GRANTED**.

The application will be forwarded to the examiner for action on the merits commensurate with this decision.

Should there be any questions with regard to this letter please contact John Kittle by letter addressed to the Director, Technology Center 3700/2900, P.O. Box 1450 Alexandria, VA 22313-1450, or by telephone at (703) 308-0873 or by facsimile transmission at (703) 308-3139.

John E. Kittle

John E. Kittle
Director
Technology Center 3700/2900

UNITED STATES PATENT AND TRADEMARK OFFICE

Commissioner for Patents
United States Patent and Trademark Office
P.O. Box 1450
Alexandria, VA 22313-1450
www.uspto.gov

KARIN E. PETERKA, ESQ
C/O BUCHALTER, NEMER
1000 WILSHIRE BOULEVARD
SUITE 1500
LOS ANGELES, CA 90017

COPY MAILED

FEB 22 2006

OFFICE OF PETITIONS

In re Application of
Melody Rhynes et al.
Application No. 29/206,983
Filed: June 7, 2004
Attorney Docket No. H4800-3001

ON PETITION

This is a decision on the petition, filed January 18, 2006 under 37 CFR 1.137(b)[1], to revive the above-identified application.

The petition is **GRANTED**.

A Notice of Allowability, mailed August 8, 2005, required the submission of corrected drawings on or before November 8, 2005. This application became abandoned November 9, 2005. Accordingly, a Notice of Abandonment was mailed January 9, 2006.

This application is being forwarded to the Publishing Division for review of the drawings shown as having been received in the PTO on January 18, 2006.

Telephone inquiries concerning this matter may be directed to the undersigned Petitions Attorney at (571) 272-3212.

Patricia Faison-Ball
Senior Petitions Attorney
Office of Petitions

---

[1]A grantable petition to revive an abandoned application under 37 CFR 1.137(b) must be accompanied by:

(1) the required reply (unless previously filed), which may be met by the filing of a continuing application in a nonprovisional application abandoned for failure to prosecute, but must be the payment of the issue fee or any outstanding balance thereof in an application or patent, abandoned or lapsed for failure to pay the issue fee or any portion thereof;

(2) the petition fee required by 37 CFR 1.17(l);

(3) a statement that the entire delay in filing the required reply from the due date for the reply until the filing of a grantable petition pursuant to 37 CFR 1.137(b) was unintentional. The Commissioner may require additional information where there is a question whether the delay was unintentional; and

(4) a terminal disclaimer (and fee as set forth in 37 CFR 1.20(d)) in a design application, a utility application filed before June 8, 1995, or a plant application filed before June 8, 1995.

UNITED STATES PATENT AND TRADEMARK OFFICE

Commissioner for Patents
United States Patent and Trademark Office
P.O. Box 1450
Alexandria, VA 22313-1450
www.uspto.gov

Shlesinger, Fitzsimmons & Shlesinger
Suite 1323
183 East Main Street
Rochester NY 14604

COPY MAILED

DEC 2 2 2004

OFFICE OF PETITIONS

In re Application of :
Hans-Joachim Naber :
Application No. 29/206,991 : DECISION ON PETITION
Filed: June 7, 2004 :
For: Can-Shaped Waste Container :

This is a decision on the petition filed July 29, 2004, requesting that the above-identified application be accorded a filing date of June 7, 2004.

On June 7, 2004, applicant deposited the above-identified application. The filing included, inter alia, a transmittal letter, two sheets of drawings, a declaration, a certified copy of European Union 000120126, and a filing fee of $170.00.

On July 16, 2004, the Office of Initial Patent Examination mailed a Notice of Incomplete Nonprovisional Application stating that the application had not been accorded a filing date as the application was deposited without a specification, including at least one claim, and that the filing date would be the date of receipt of the omitted item.

In response, on July 29, 2004, applicant filed the present petition and a payment of $130.00. Applicant states that the Office mislaid or lost the single page containing the specification and claim filed by applicant on June 7, 2004. Applicant asserts that even if applicant failed to include the single page of specification and claim, the application should be accorded a filing date of June 7, 2004, because the papers on file include language that can be construed as the specification and claim for the purposes of establishing a filing date.

A review of the record reveals that neither a formal specification nor a formal claim was included with the application papers deposited June 7, 2004. However, it is noted that the application papers deposited June 7, 2004, included a design patent application transmittal indicating that the

application contains, inter alia, two sheets of drawings and a declaration. Additionally, applicant submitted a letter on filing signed by Philip K. Fitzsimmons, which refers to the application by the inventor's name and title, and also states that application papers include, inter alia, two sheets of drawings, a certified copy of European Union 000120126, and a declaration. The declaration states that the inventor believes himself to be

> "the original, first, and sole inventor . . . of the design entitled Can-Shaped Waste Container which is described and claimed in the attached specification, which I have reviewed and understand including the claim, as amended by any amendment specifically referred to in this oath or declaration."

Neither a formal specification (written description) nor a formal claim was included with the application when it was deposited. However, because this a design application, the transmittal and the letter signed by Mr. Fitzsimmons, and the above-quoted language in the declaration can be construed as the specification (written description) and claim, respectively, required by 35 USC 112 insofar as this design application is concerned. The form of a claim in a design application is fixed by rule and is accordingly different from the claims of other applications. It is clear that there has been, and is, no doubt as to the form of, and what is to be claimed herein since this is a design application for which the form of the claim is set by 37 CFR 1.153.

Under the circumstances, it is appropriate that the transmittal and the letter, and the language quoted above from the declaration be construed as the specification and claim, respectively, for purposes of according this application a filing date of June 7, 2004.

Applicant is reminded that errors such as occurred herein can result in loss of rights and care must be taken to avoid such.

In view of the above, the petition is granted.

The Office notes that applicant states that applicant included one page of specification and a claim with the present petition. The Office did not receive this document with the present petition.

The application is being returned to the Office of Initial Patent Examination for further processing with a filing date of June 7, 2004, using the papers submitted on that date.

Telephone inquiries concerning this matter may be directed to the undersigned at (571) 272-3211.

Christina Tartera Donnell

Christina Tartera Donnell
Senior Petitions Attorney
Office of Petitions

Conferee: Fred Silverberg, Senior Legal Advisor
Office of Patent Legal Administration

UNITED STATES PATENT AND TRADEMARK OFFICE

Commissioner for Patents
United States Patent and Trademark Office
P.O. Box 1450
Alexandria, VA 22313-1450
www.uspto.gov

Shlesinger, Fitzsimmons & Shlesinger
Suite 1323
183 East Main Street
Rochester NY 14604

COPY MAILED
OCT 0 4 2006
OFFICE OF PETITIONS

In re Application of :
Hans-Joachim Naber :
Application No. 29/206,991 : **SUPPLEMENTAL** DECISION ON
Filed: June 7, 2004 : PETITION
For: Can-Shaped Waste Container :
:

This is a **supplemental** decision on the petition filed July 29, 2004, requesting that the above-identified application be accorded a filing date of June 7, 2004.

On June 7, 2004, applicant deposited the above-identified application. The filing included, inter alia, a transmittal letter, two sheets of drawings, a declaration, a certified copy of European Union 000120126, and a filing fee of $170.00.

On July 16, 2004, the Office of Initial Patent Examination mailed a Notice of Incomplete Nonprovisional Application stating that the application had not been accorded a filing date as the application was deposited without a specification, including at least one claim, and that the filing date would be the date of receipt of the omitted item.

In response, on July 29, 2004, applicant filed the present petition and a payment of $130.00. Applicant states that the Office mislaid or lost the single page containing the specification and claim filed by applicant on June 7, 2004. Applicant asserts that even if applicant failed to include the single page of specification and claim, the application should be accorded a filing date of June 7, 2004, because the papers on file include language that can be construed as the specification and claim for the purposes of establishing a filing date.

A review of the record reveals that neither a formal specification nor a formal claim was included with the

application papers deposited June 7, 2004. However, it is noted that the application papers deposited June 7, 2004, included a design patent application transmittal indicating that the application contains, inter alia, two sheets of drawings and a declaration. Additionally, applicant submitted a letter on filing signed by Philip K. Fitzsimmons, which refers to the application by the inventor's name and title, and also states that application papers include, inter alia, two sheets of drawings, a certified copy of European Union 000120126, and a declaration. The declaration states that the inventor believes himself to be

> "the original, first, and sole inventor . . . of the design entitled Can-Shaped Waste Container which is described and claimed in the attached specification, which I have reviewed and understand including the claim, as amended by any amendment specifically referred to in this oath or declaration."

Neither a formal specification (written description) nor a formal claim was included with the application when it was deposited. However, because this a design application, the transmittal and the letter signed by Mr. Fitzsimmons, and the above-quoted language in the declaration can be construed as the specification (written description) and claim, respectively, required by 35 USC 112 insofar as this design application is concerned. The form of a claim in a design application is fixed by rule and is accordingly different from the claims of other applications. It is clear that there has been, and is, no doubt as to the form of, and what is to be claimed herein since this is a design application for which the form of the claim is set by 37 CFR 1.153.

Under the circumstances, it is appropriate that the transmittal and the letter, and the language quoted above from the declaration be construed as the specification and claim, respectively, for purposes of according this application a filing date of June 7, 2004.

Applicant is reminded that errors such as occurred herein can result in loss of rights and care must be taken to avoid such.

In view of the above, the petition is granted.

The Office notes that applicant states that applicant included one page of specification and a claim with the present petition. The Office did not receive these documents with the petition. **Accordingly, applicant must provide the Office with a preliminary**

amendment, which includes a formal specification and claim in order to process the application. Thereafter, the preliminary amendment must be considered by the examiner for entry of new matter not described in the application as filed. 35 USC 112, first paragraph; 35 USC 132.

This matter is being referred to the Office of Initial Patent Examination to await the filing of the preliminary amendment and for further processing with a filing date of June 7, 2004.

Telephone inquiries concerning this matter may be directed to the undersigned at (571) 272-3211.

Christina Tartera Donnell

Christina Tartera Donnell
Senior Petitions Attorney
Office of Petitions

Conferee: Fred Silverberg, Senior Legal Advisor
Office of Patent Legal Administration

UNITED STATES PATENT AND TRADEMARK OFFICE

Commissioner for Patents
United States Patent and Trademark Office
P.O. Box 1450
Alexandria, VA 22313-1450
www.uspto.gov
DIW 02-05

MCNEES, WALLACE & NURICK LLC
100 PINE STREET
P.O. BOX 1166
HARRISBURG PA 17108-1166

COPY MAILED

FEB 07 2005

OFFICE OF PETITIONS

In re Application of	:	
Tucker et al.	:	
Application No. 29/206,999	:	DECISION GRANTING PETITION
Filed: 7 June, 2004	:	
Att'y Docket No. 20714-0049 (US)	:	

This is a decision on the petition filed under 37 CFR 1.53 on 13 September, 2004, which is treated as a petition requesting that the Notice of Incomplete Nonprovisional Application mailed on 16 July, 2004, be withdrawn.

On 7 June, 2004, the above-identified design application was filed.

On 16 July, 2004, Initial Patent Examination Division mailed a Notice of Incomplete Nonprovisional Application, stating that the application had not been accorded a filing date because the specification was missing and did not include at least one claim

In response, on 13 September, 2004, the present petition and one (1) page of specification including a claim, were filed. Petitioner argues that one (1) page of specification was filed with the other application papers on 7 June, 2004, and that the one (1) page of specification was misplaced in the U.S. Patent and Trademark Office (Office). In support of the petition, a copy of petitioner's postcard receipt was supplied. The postcard receipt shows an Office stamp of 7 June, 2004, the above-identified application number, and identifies the application by attorney docket number, and acknowledges receipt of, *inter alia*, "Pages Specification (1 pg)". Petitioner requests that the application, including one (1) page of specification, be accorded a filing date of 7 June, 2004.

Upon review of the record, no page of specification deposited on 7 June, 2004, has been located among the application papers. However, the evidence is convincing that the application papers deposited on 7 June, 2004, included one (1) page of specification, which was subsequently misplaced in the USPTO. Therefore, the application, including the one (1) page of specification, was complete on filing and entitled to a filing date of 7 June, 2004.

In view of the above, the petition is granted.

The Notice of Incomplete Nonprovisional Application mailed on 16 July, 2004, is withdrawn. The petition fee of $130.00 will be credited to counsel's deposit account, No. 50-1059, as authorized in the present petition.

The application will be processed and examined using the one (1) page of specification supplied on 13 September, 2004.

The application is being returned to Initial Patent Examination Division for processing with a filing date of 7 June, 2004, using the application papers filed on that date, and the one (1) page of specification, including one (1) claim, supplied with the present petition, and for an indication in Office records that one (1) claim was present on filing, and mailing of a corrected Filing Receipt.

Telephone inquiries specific to this matter should be directed to the undersigned at 571.272.3231.

Douglas I. Wood
Senior Petitions Attorney
Office of Petitions

UNITED STATES PATENT AND TRADEMARK OFFICE

Commissioner for Patents
United States Patent and Trademark Office
P.O. Box 1450
Alexandria, VA 22313-1450
www.uspto.gov

PEARNE & GORDON LLP
1801 EAST 9TH STREET
SUITE 1200
CLEVELAND, OH 44114-3108

COPY MAILED

JUN 15 2007

OFFICE OF PETITIONS

In re Application of Arvidsson et al. :
Application No. 29/207,001 : Decision on Petition
Filing Date: June 7, 2004 :
Attorney Docket No. 36847 :

This is a decision on the petition under 37 CFR 1.137(b), filed January 29, 2007, to revive the above-identified application.

The petition is **DISMISSED**.

The above-identified application became abandoned for failure to reply in a timely manner to the non-final Office action mailed May 31, 2006, which set a shortened statutory period for reply of three (3) months. An extension of time under the provisions of 37 CFR 1.136(a) was not obtained. Accordingly, the above-identified application became abandoned on September 1, 2006.

A grantable petition under 37 CFR 1.137(b) must be accompanied by:

(1) the reply required to the outstanding Office action or notice, unless previously filed,
(2) the petition fee,
(3) a statement that the entire delay in filing the required reply from the due date for the reply until the filing of a grantable petition pursuant to 37 CFR 1.137(b) was unintentional, and
(4) a terminal disclaimer and fee if the application was filed on or before June 8, 1995 or if the application is a design application.

As to item (4) above, 37 CFR 1.137(d)(1) states in part, "Any petition to revive pursuant to this section in a design application must be accompanied by a terminal disclaimer and fee as set forth in § 1.321." Therefore, a terminal disclaimer is required for the instant design application.

A terminal disclaimer has not been filed. Therefore, the petition must be dismissed.

Any request for reconsideration should include a terminal disclaimer and the required fee. A copy of a terminal disclaimer form is attached.

Any request for reconsideration must be submitted within TWO (2) MONTHS from the mail date of this decision. No further petition fee is required for the request. Extensions of time under 37 CFR 1.136(a) are permitted. The reconsideration request should include a cover letter entitled "Renewed Petition under 37 CFR 1.137(b)."

Further correspondence with respect to this matter should be addressed as follows:

By mail: Mail Stop Petition
Commissioner for Patents
P.O. Box 1450
Alexandria, VA 22313-1450

By facsimile: (571) 273-8300
Attn: Office of Petitions

By hand: U.S. Patent and Trademark Office
Customer Service Window
Randolph Building
401 Dulany Street
Alexandria, VA 22314

Telephone inquiries regarding this communication should be directed to Petitions Attorney Steven Brantley at (571) 272-3203.

Charles Steven Brantley
Senior Petitions Attorney
Office of Petitions

Attached: PTO/SB/63 Terminal Disclaimer Form

PTO/SB/63 (04-07)
Approved for use through 09/30/2007. OMB 0651-0031
U.S. Patent and Trademark Office; U.S. DEPARTMENT OF COMMERCE
Under the Paperwork Reduction Act of 1995, no persons are required to a collection of information unless it displays a valid OMB control number.

TERMINAL DISCLAIMER TO ACCOMPANY PETITION	Docket Number (Optional)

In re Application of:

Name:

Application Number:

Filed:

For:

The owner*, _____ of _____ percent interest in the above-identified application hereby disclaims a terminal part of the term of any patent granted the above-identified application equivalent to: (1) if the above-identified application is a design application, the period of abandonment of the above-identified application, and (2) if the above-identified application is a utility or plant application, the lesser of: (a) the period of abandonment of the application; or (b) the period extending beyond twenty years from the date on which the above-identified application was filed in the United States or, if the application contains a specific reference to an earlier filed application(s) under 35 U.S.C. 120, 121, or 365(c), from the date on which the earliest such application was filed. This disclaimer also applies to any patent granted on a utility or plant application filed before June 8, 1995, or a design application, that contains a specific reference under 35 U.S.C. 120, 121, or 365(c) to the above-identified application. This disclaimer is binding upon the grantee, and its successors or assigns.

Check either box 1 or 2 below, if appropriate.

1. ☐ For submissions on behalf of an organization (e.g., corporation, partnership, university, government agency, etc.), the undersigned is empowered to act on behalf of the organization.

2. ☐ The undersigned is an attorney or agent of record. Registration Number_____.

_____	_____
Signature	Date
_____	_____
Typed or Printed Name	Telephone Number

☐ Terminal disclaimer fee under 37 CFR 1.20(d) included.

WARNING: Information on this form may become public. Credit card information should not be included on this form. Provide credit card information and authorization on PTO-2038.

* Statement under 37 CFR 3.73(b) is required if terminal disclaimer is signed by the assignee (owner). Form PTO/SB/96 may be used for making this certification. See MPEP § 324.

This collection of information is required by 37 CFR 1.137. The information is required to obtain or retain a benefit by the public which is to file (and by the USPTO to process) an application. Confidentiality is governed by 35 U.S.C. 122 and 37 CFR 1.11 and 1.14. This collection is estimated to take 12 minutes to complete, including gathering, preparing, and submitting the completed application form to the USPTO. Time will vary depending upon the individual case. Any comments on the amount of time you require to complete this form and/or suggestions for reducing this burden, should be sent to the Chief Information Officer, U.S. Patent and Trademark Office, U.S. Department of Commerce, P.O. Box 1450, Alexandria, VA 22313-1450. DO NOT SEND FEES OR COMPLETED FORMS TO THIS ADDRESS. SEND TO: **Commissioner for Patents, P.O. Box 1450, Alexandria, VA 22313-1450.**

If you need assistance in completing the form, call 1-800-PTO-9199 and select option 2.

Privacy Act Statement

The **Privacy Act of 1974 (P.L. 93-579)** requires that you be given certain information in connection with your submission of the attached form related to a patent application or patent. Accordingly, pursuant to the requirements of the Act, please be advised that: (1) the general authority for the collection of this information is 35 U.S.C. 2(b)(2); (2) furnishing of the information solicited is voluntary; and (3) the principal purpose for which the information is used by the U.S. Patent and Trademark Office is to process and/or examine your submission related to a patent application or patent. If you do not furnish the requested information, the U.S. Patent and Trademark Office may not be able to process and/or examine your submission, which may result in termination of proceedings or abandonment of the application or expiration of the patent.

The information provided by you in this form will be subject to the following routine uses:

1. The information on this form will be treated confidentially to the extent allowed under the Freedom of Information Act (5 U.S.C. 552) and the Privacy Act (5 U.S.C 552a). Records from this system of records may be disclosed to the Department of Justice to determine whether disclosure of these records is required by the Freedom of Information Act.
2. A record from this system of records may be disclosed, as a routine use, in the course of presenting evidence to a court, magistrate, or administrative tribunal, including disclosures to opposing counsel in the course of settlement negotiations.
3. A record in this system of records may be disclosed, as a routine use, to a Member of Congress submitting a request involving an individual, to whom the record pertains, when the individual has requested assistance from the Member with respect to the subject matter of the record.
4. A record in this system of records may be disclosed, as a routine use, to a contractor of the Agency having need for the information in order to perform a contract. Recipients of information shall be required to comply with the requirements of the Privacy Act of 1974, as amended, pursuant to 5 U.S.C. 552a(m).
5. A record related to an International Application filed under the Patent Cooperation Treaty in this system of records may be disclosed, as a routine use, to the International Bureau of the World Intellectual Property Organization, pursuant to the Patent Cooperation Treaty.
6. A record in this system of records may be disclosed, as a routine use, to another federal agency for purposes of National Security review (35 U.S.C. 181) and for review pursuant to the Atomic Energy Act (42 U.S.C. 218(c)).
7. A record from this system of records may be disclosed, as a routine use, to the Administrator, General Services, or his/her designee, during an inspection of records conducted by GSA as part of that agency's responsibility to recommend improvements in records management practices and programs, under authority of 44 U.S.C. 2904 and 2906. Such disclosure shall be made in accordance with the GSA regulations governing inspection of records for this purpose, and any other relevant (*i.e.*, GSA or Commerce) directive. Such disclosure shall not be used to make determinations about individuals.
8. A record from this system of records may be disclosed, as a routine use, to the public after either publication of the application pursuant to 35 U.S.C. 122(b) or issuance of a patent pursuant to 35 U.S.C. 151. Further, a record may be disclosed, subject to the limitations of 37 CFR 1.14, as a routine use, to the public if the record was filed in an application which became abandoned or in which the proceedings were terminated and which application is referenced by either a published application, an application open to public inspection or an issued patent.
9. A record from this system of records may be disclosed, as a routine use, to a Federal, State, or local law enforcement agency, if the USPTO becomes aware of a violation or potential violation of law or regulation.

UNITED STATES PATENT AND TRADEMARK OFFICE

Commissioner for Patents
United States Patent and Trademark Office
P.O. Box 1450
Alexandria, VA 22313-1450
www.uspto.gov

PEARNE & GORDON LLP
1801 EAST 9TH STREET
SUITE 1200
CLEVELAND, OH 44114-3108

COPY MAILED

JUL 30 2007

OFFICE OF PETITIONS

In re Application of Arvidsson et al. :
Application No. 29/207,001 : Decision on Petition
Filing Date: June 7, 2004 :
Attorney Docket No. 36847 :

This is a decision on the renewed petition under 37 CFR 1.137(b), filed June 28, 2007, and supplemented July 26, 2007.

The petition is **granted**.

The above-identified application became abandoned for failure to reply in a timely manner to the non-final Office action mailed May 31, 2006, which set a shortened statutory period for reply of three (3) months. An extension of time under the provisions of 37 CFR 1.136(a) was not obtained. Accordingly, the above-identified application became abandoned on September 1, 2006.

Petitioner has submitted the required petition fee of $1,500. Petitioner has submitted a reply to the non-final in the form of an amendment filed January 29, 2007. Petitioner has stated the entire delay in filing the required reply from the due date for the reply until the filing of a grantable petition pursuant to 37 CFR 1.137(b) was unintentional. Petitioner has filed the required terminal disclaimer.

Since petitioner has met the requirements to revive the above-identified application pursuant to 37 CFR 1.137(b), the petition is granted and the application is revived.

Technology Center Art Unit 2913 will be informed of the instant decision and the application, including the reply filed January 29, 2007, will be further examined in due course.

Telephone inquiries regarding this communication should be directed to Petitions Attorney Steven Brantley at (571) 272-3203.

Charles Steven Brantley
Senior Petitions Attorney
Office of Petitions

UNITED STATES PATENT AND TRADEMARK OFFICE

COMMISSIONER FOR PATENTS
UNITED STATES PATENT AND TRADEMARK OFFICE
P.O. BOX 1450
ALEXANDRIA, VA 22313-1450
www.uspto.gov
DIW Nov-05

MCDERMOTT WILL & EMERY LLP
600 13th Street, N.W.
Washington DC 20005-3096

COPY MAILED

NOV 17 2005

OFFICE OF PETITIONS

In re Application of	:	
Jeffrey W. Wonderly	:	DECISION ON PETITION
Application No. 29/207,042	:	TO WITHDRAW HOLDING
Filed: 9 June, 2004	:	OF ABANDONMENT
Atty Docket No. 044210-0350	:	

This is a decision on the petition filed 27 September, 2005, which is being treated as a request to withdraw the holding of abandonment of the above-identified application.

This application was held abandoned for failure to respond in a timely manner to the non-final Office action requiring restriction and/or election mailed on 1 March, 2005. A Notice of Abandonment was mailed 20 September, 2005.

Petitioner asserts that a proper response was timely filed. In support of the petition, petitioner submits a copy of a postcard receipt date-stamped 29 March, 2005, acknowledging receipt of a response in the form of a Response to Restriction Requirement. A copy of the Response was included with this petition.

The original correspondence filed was not matched with the file at the time the Notice of Abandonment was mailed and cannot be located. However, M.P.E.P. § 503 states, "[a] post card receipt which itemizes and properly identifies the papers which are being filed serves as *prima facie* evidence of receipt in the PTO of all the items listed thereon on the date stamped thereon by the PTO." Accordingly, it is concluded that the response was timely filed in the Office but was not matched with the application file.

For the reasons stated above, the Notice of Abandonment is hereby vacated and the holding of abandonment withdrawn.

The petition is **GRANTED**.

The application file will be forwarded to the Technology Center's technical support staff for entry of the response to the

restriction requirement. Thereafter, the application file will be forwarded to the examiner for action in due course.

Telephone inquiries concerning this matter may be directed to the undersigned at (571)272-3231.

Douglas I. Wood
Senior Petitions Attorney
Office of Petitions

UNITED STATES PATENT AND TRADEMARK OFFICE

Commissioner for Patents
United States Patent and Trademark Office
P.O. Box 1450
Alexandria, VA 22313-1450
www.uspto.gov

COPY MAILED

MAR 07 2008

OFFICE OF PETITIONS

TROXELL LAW OFFICE PLLC
SUITE 1404
5205 LEESBURG PIKE
FALLS CHURCH VA 22041

In re Application of	:	
Dan Kennard	:	
Application No. 29/207,054	:	ON PETITION
Filed: June 9, 2004	:	
Title: Bath Accessory Base	:	

This is a decision on the petition under 37 CFR 1.181 to withdraw the holding of abandonment, filed February 13, 2006.

The petition to withdraw the holding of abandonment is **Dismissed**.

Any request for reconsideration should be filed within **TWO MONTHS** of the mailing date of this decision in order to be considered timely. 37 CFR 1.181(f). This time period may not be extended pursuant to 37 CFR 1.136.

This application became abandoned for failure to timely submit corrected drawings, as required by the Notice of Allowability which was mailed August 24, 2005 and set a 3 month period for reply. Extensions of time were not available under 37 CFR §1.136(a). Accordingly, this application became abandoned on November 25, 2005. A Notice of Abandonment was mailed on January 30, 2006.

Petitioner maintains the Notice of Allowability is in error, no drawings were required. Petitioner contends a careful reading of the examiner's amendment indicates that no drawing changes are required.

Petitioner's argument has been considered, but it is not convincing to establish the holding of abandonment should be withdrawn.

The Notice of Allowability clearly states that applicant was required to submit corrected drawings within the three month period of reply. A review of the record shows that corrected drawings were not filed prior to the abandonment of the application. Further review shows, petitioner did not file any objections to the Notice of Allowability within the reply period. Thus, withdrawal of the holding of abandonment is not in order.

Petitioner should consider filing a petition under 37 CFR 1.137(b) stating that the delay was unintentional. Public Law 97-247, § 3, 96 Stat. 317 (1982), which revised patent and trademark fees, amended 35 U.S.C. § 41(a)(7) to provide for the revival of an "unintentionally" abandoned application without a showing that the delay in prosecution or in late payment of the issue fee was "unavoidable." This amendment to 35 U.S.C. § 41(a)(7) has been implemented in 37 CFR 1.137(b). An "unintentional" petition under 37 CFR 1.137(b) must be accompanied by the petition fee.

The filing of a petition under 37 CFR 1.137(b) cannot be intentionally delayed and therefore must be filed promptly. A person seeking revival due to unintentional delay cannot make a statement that the delay was unintentional unless the entire delay, including the date it was discovered that the application was abandoned until the filing of the petition to revive under 37 CFR 1.137(b), was unintentional. A statement that the delay was unintentional is not appropriate if petitioner intentionally delayed the filing of a petition for revival under 37 CFR 1.137(b).

Petitioner is reminded that a terminal disclaimer and the $130 ($65 for small entity) terminal disclaimer fee is required under 37 CFR 1.137(c) if the application is: (1) a design application, (2) a utility application filed before June 8, 1995, or (3) a plant application filed before June 8, 1995.

Further correspondence with respect to this matter should be addressed as follows:

By mail:	Mail Stop Petition Commissioner for Patents P.O. Box 1450 Alexandria, VA 22313-1450
By facsimile:	(571) 273-8300
By delivery service: (FedEx, UPS, DHL, etc.)	U.S. Patent and Trademark Office Customer Service Window,

Randolph Building
401 Dulany Street
Alexandria, VA 22314

Telephone inquiries concerning this matter should be directed to the undersigned at (571) 272-3215.

Charlema R. Grant
Petitions Attorney
Office of Petitions

UNITED STATES PATENT AND TRADEMARK OFFICE

Commissioner for Patents
United States Patent and Trademark Office
P.O. Box 1450
Alexandria, VA 22313-1450
www.uspto.gov

TROXELL LAW OFFICE PLLC
SUITE 1404
5205 LEESBURG PIKE
FALLS CHURCH VA 22041

COPY MAILED

JUN 0 9 2008

In re Application of	:	
Dan Kennard	:	
Application No. 29/207,054	:	DECISION ON PETITION
Filed: June 9, 2004	:	
Title: Bath Accessory Base	:	

This is a decision on the renewed petition under 37 CFR 1.137(b), filed May 7, 2008, to revive the above-identified design application.

The petition is **GRANTED**.

The application became abandoned for failure submit corrected drawings on or before November 24, 2005, as required by the Notice of Allowability, mailed August 24, 2005, which set a statutory period for reply of three (3) months. Accordingly, the application became abandoned on November 25, 2005. A Notice of Abandonment was mailed on January 30, 2006. A petition filed under 37 CFR 1.181 was dismissed on March 7, 2008.

The petition satisfies the requirements of 37 CFR 1.137(b) in that petitioner has supplied (1) the reply in the form of the drawings (2) the petition fee of $770, (3) a proper statement of unintentional delay, and (4) a terminal disclaimer and fee as required by 37 CFR 1.137(d). Accordingly, the failure to timely submit corrected drawings is accepted as being unintentionally delayed.

The terminal disclaimer is accepted and has been made of record. Any continuing application filed from this application must contain a copy of the terminal disclaimer. The copy of the terminal disclaimer must be filed with a cover letter requesting the terminal disclaimer be recorded on the continuing application. A copy of this decision should be attached to the cover letter.

Telephone inquiries concerning this decision should be directed to the undersigned at (571) 272-3215.

This application is being referred to the Office of Data Management for further processing in accordance with this decision on petition.

Charlema Grant
Petitions Attorney
Office of Petitions

UNITED STATES PATENT AND TRADEMARK OFFICE

Commissioner for Patents
United States Patent and Trademark Office
P.O. Box 1450
Alexandria, VA 22313-1450
www.uspto.gov

9/22/05

LERNER AND GREENBERG, PA
P O BOX 2480
HOLLYWOOD FL 33022-2480

In re Application of
Joerg Schroeter
Serial No.: 29/207,099
Filed: June 7, 2004
Attorney Docket No.: ZTP03M01824

: PETITION DECISION

This is a decision on applicant's petition to revive patent application under 37 CFR 1.137(b), filed August 3, 2005, to revive an unintentionally abandoned application.

This application became abandoned for failure to respond to the Notice of Allowance mailed January 25, 2005, which set a three-month statutory period to submit the Issue Fee and formal drawings. The Issue fee was submitted March 8, 2005; however, as no formal drawings were received by April 25, 2005, a Notice of Abandonment was mailed March 8, 2005. The actual date of abandonment was April 26, 2005; applicant then filed this petition.

A grantable petition for a design application under 37 CFR 1.137(b), as revised December 1, 1997, requires four items: (1) a petition and petition fee; (2) a complete response if not earlier made; (3) a statement that the entire period of delay in prosecution was unintentional; and (4) a terminal disclaimer and disclaimer fee.

Applicant's petition is **GRANTED**.

The application will be forwarded to Publication Division for printing as a patent in due course.

Should there be any questions with respect to this decision, please contact Sandra Morris; by mail addressed to: Director, Technology Center 1700/2900, P.O. Box 1450, Alexandria, VA 22313-1450; or by telephone at (571) 272-2622.

Jacqueline M. Stone

Jacqueline Stone
Director, Technology Center 1700/2900

OIPE JC165
MAR 0 1 2005
PATENT & TRADEMARK OFFICE

PTO/SB/83 (09-04)
Approved for use through 11/30/2005. OMB 0651-0035
U.S. Patent and Trademark Office, U.S. DEPARTMENT OF COMMERCE
Under the Paperwork Reduction Act of 1995, no persons are required to respond to a collection of information unless it displays a valid OMB control number.

REQUEST FOR WITHDRAWAL AS ATTORNEY OR AGENT AND CHANGE OF CORRESPONDENCE ADDRESS

Application Number	29/207,149
Filing Date	June 8, 2004
First Named Inventor	Kell
Art Unit	2913
Examiner Name	
Attorney Docket Number	075113.0116

To: Commissioner for Patents
P.O. Box 1450
Alexandria, VA 22313-1450

Approved 7/20/05
Jacqueline M. Stone, Director
Technology Center 1700

Please withdraw me as attorney or agent for the above identified patent application, and

- [ ] all the attorneys/agents of record.
- [ ] the attorneys/agents (with registration numbers) listed on the attached paper(s), or
- [x] the attorneys/agents associated with Customer Number 023640

NOTE: This box can only be checked when the power of attorney of record in the application is to all the practitioners associated with a customer number.

The reasons for this request are: The continued prosecution of this application will be handled by another legal firm.

CORRESPONDENCE ADDRESS

1. [ ] The correspondence address is NOT affected by this withdrawal.
2. [x] Change the correspondence address and direct all future correspondence to:

[ ] The address associated with Customer Number:

OR

[x] Firm or Individual Name	Mark A. Tidwell Jackson Walker L.L.P.				
Address	1401 McKinney Suite 1900				
City	Houston	State	Texas	Zip	77010
Country	USA				
Telephone	713.752.4578			Fax	713.752.4221
Signature					
Name	Paul R. Morico			Registration No.	35,960
Date	March 1, 2005			Telephone No.	713.229.1732

NOTE: Withdrawal is effective when approved rather than when received. Unless there are at least 30 days between approval of withdrawal and the expiration date of a time period for response or possible extension period, the request to withdraw is normally disapproved.

This collection of information is required by 37 CFR 1.36. The information is required to obtain or retain a benefit by the public which is to file (and by the USPTO to process) an application. Confidentiality is governed by 35 U.S.C. 122 and 37 CFR 1.11 and 1.14. This collection is estimated to take 12 minutes to complete, including gathering, preparing, and submitting the completed application form to the USPTO. Time will vary depending upon the individual case. Any comments on the amount of time you require to complete this form and/or suggestions for reducing this burden, should be sent to the Chief Information Officer, U.S. Patent and Trademark Office, U.S. Department of Commerce, P.O. Box 1450, Alexandria, VA 22313-1450. DO NOT SEND FEES OR COMPLETED FORMS TO THIS ADDRESS. SEND TO: **Commissioner for Patents, P.O. Box 1450, Alexandria, VA 22313-1450.**

If you need assistance in completing the form, call 1-800-PTO-9199 and select option 2.

UNITED STATES PATENT AND TRADEMARK OFFICE

Commissioner for Patents
United States Patent and Trademark Office
P.O. Box 1450
Alexandria, VA 22313-1450
www.uspto.gov

MOTOROLA, INC
INTELLECTUAL PROPERTY SECTION
LAW DEPT
8000 WEST SUNRISE BLVD
FT LAUDERDAL, FL 33322

COPY MAILED

OCT 28 2005

OFFICE OF PETITIONS

In re Application of	:	
Lan-Ting Liu et al	:	
Application No. 29/207,169	:	ON PETITION
Filed: June 9, 2004	:	
Attorney Docket No. CM07093K	:	

This is a decision on the petition under 37 CFR 1.137(b), filed July 19, 2005, to revive the above-identified application.

The petition is **DISMISSED**.

Any request for reconsideration of this decision must be submitted within TWO (2) MONTHS from the mail date of this decision. Extensions of time under 37 CFR 1.136(a) are permitted. The reconsideration request should include a cover letter entitled "Renewed Petition under 37 CFR 1.137(b)." Petitioner is advised that this is **not** a final agency action decision.

The above-identified application became abandoned for failure to submit the issue fee in a timely manner in reply to the Notice of Allowance mailed April 4, 2005, which set a statutory period for reply of three (3) months. Accordingly, the above-identified application became abandoned on July 6, 2005.

A grantable petition to revive an abandoned application under 37 CFR 1.137(b) must be accompanied by: (1) the required reply (unless previously filed), which may met by the filing of a continuing application in a nonprovisional application abandoned for failure to prosecute, but must be the payment of the issue fee or any outstanding balance thereof in an application or patent, abandoned or lapsed for failure to pay the issue fee or any portion thereof; (2) the petition fee as set forth in 37 CFR 1.17(m); (3) a statement that the entire delay in filing the required reply from the due date for the reply until the filing of a grantable petition pursuant to 37 CFR 1.137(b) was unintentional; and (4) any terminal disclaimer (and fee as set forth in 37 CFR 1.20(d)). This petition lacks item (4) above.

Further correspondence with respect to this matter should be addressed as follows:

By mail: Mail Stop PETITIONS
Commissioner for Patents
Post Office Box 1450
Alexandria, VA 22313-1450

By hand: Customer Service Window
Randolph Building
401 Dulany Street
Alexandria, VA 22314

By fax: (571) 273-8300

The file does not indicate a change of address has been submitted, although the address given on the petition differs from the address of record. If appropriate, a change of address should be filed in accordance with MPEP 601.03. A courtesy copy of this decision is being mailed to the address given on the petition; however, the Office will mail all future correspondence solely to the address of record.

Telephone inquiries concerning this decision should be directed to Wan Laymon at (571) 272-3220.

Wan Laymon

Wan Laymon
Petitions Examiner
Office of Petitions

cc: BARBARA R. DOUTRE
MOTOROLA, INC.
8000 WEST SUNRISE BOULEVARD
PLANTATION, FL 33322

UNITED STATES PATENT AND TRADEMARK OFFICE

Commissioner for Patents
United States Patent and Trademark Office
P.O. Box 1450
Alexandria, VA 22313-1450
www.uspto.gov

MOTOROLA, INC
INTELLECTUAL PROPERTY SECTION
LAW DEPT
8000 WEST SUNRISE BLVD
FT LAUDERDALE, FL 33322

COPY MAILED

JAN 2 5 2006

OFFICE OF PETITIONS

In re Application of	:	
Lan-Ting Liu et al	:	
Application No. 29/207,169	:	ON PETITION
Filed: June 9, 2004	:	
Attorney Docket No. CM07093K	:	

This is a decision on the renewed petition under 37 CFR 1.137(b), filed January 10, 2006, to revive the above-identified application.

The petition is **GRANTED**.

The terminal disclaimed filed November 14, 2005 under 37 CFR 1.137(d) has been entered and made of record. Effective September 8, 2000, 37 CFR 1.137(d)(1) has been added to state that a terminal disclaimer filed pursuant to this rule must dedicate to the public a terminal part of the term of any patent granted thereon equivalent to the lesser of: 1) the period of abandonment of the application; or 2) the period extending beyond twenty years from the date on which the application for the patent was filed in the United States, or, if the application contains a specific reference to an earlier filed application(s) under 35 U.S.C. 120, 121 or 365(c), from the date on which the earliest such application was filed. 65 Fed. Reg. 54,674 (2000). Accordingly, the period of the terminal disclaimer filed November 14, 2005 will be equivalent to the lesser of period (1) or (2), as noted above, for this application.

Telephone inquiries concerning this decision should be directed to Wan Laymon at (571) 272-3220.

This matter is being referred to Publishing Division.

Wan Laymon

Wan Laymon
Petitions Examiner
Office of Petitions

UNITED STATES PATENT AND TRADEMARK OFFICE

Commissioner for Patents
United States Patent and Trademark Office
P.O. Box 1450
Alexandria, VA 22313-1450
www.uspto.gov
OIW 08-04

HAYNES AND BOONE, LLP
901 MAIN STREET, SUITE 3100
DALLAS TX 75202

COPY MAILED

AUG 2 0 2004

OFFICE OF PETITIONS

In re Application of	:	
Frank Blateri	:	
Application No. 29/207,180	:	DECISION ON PETITION
Filed: 9 June, 2004	:	
Attorney Docket No. 23695.369	:	

This is a decision on the petition styled under 37 CFR 1.53(e) and 1.181, filed on 3 August, 2004, requesting that the above-identified application be accorded a filing date which is treated as a petition requesting that above-identified application, including one (1) sheet of drawings, be accorded a filing date of 9 June, 2004.

The petition is granted.

On 9 June, 2004, the application was filed.

On 21 July, 2004, Initial Patent Examination Division mailed a Notice of Incomplete Nonprovisional Application, stating that the application had been deposited without drawings, and that application should reconsider whether drawings were necessary under 35 U.S.C. § 113 (first sentence). The Notice stated that the filing date would be the date of receipt of the missing drawings.

In response, on 3 August, 2004, the present petition and a copy of one (1) sheet of drawings, was filed. Petitioner argues that the drawing sheet was filed with the other application papers on 9 June, 2004, but was subsequently misplaced in the U.S. Patent and Trademark Office (Office). In support, a copy of petitioner's postcard receipt was supplied with the present petition. The postcard receipt shows an Office date stamp of 06/09/04, the above-identified application number, and identifies

the application by the inventor's name, invention title, and attorney docket number, and acknowledges receipt of, *inter alia*, "one (1) drawing sheets". Petitioner requests that the application, including the one (1) sheet of drawings, be accorded a filing date of 9 June, 2004.

A review of the record reveals that no sheets of drawings received on 9 June, 2004, are located among the application papers received on that date. However, the evidence is convincing that the application papers deposited on 9 June, 2004, included one (1) sheet of drawings, which was subsequently misplaced in the Office. Therefore, the application, including one (1) sheet of drawings, is entitled to a filing date of 9 June, 2004.

In view of the above, the petition is granted to the extent indicated. The petition fee of $130.00 will be credited to counsel's deposit account, No. 08-1394.

The application will be processed with the copy of the one (1) sheet of drawings supplied on 3 August, 2004, as a part of the original disclosure.

The application is being returned to Initial Patent Examination Division for further processing with a filing date of 9 June, 2004, using the application papers filed on that date, and the copy of one sheet of drawings described in the specification supplied with the present petition, and for an indication in Office records that one (1) sheet of drawings was present on filing.

Telephone inquiries should be directed to the undersigned at 703-308-6918.

D Wood

Douglas I. Wood
Senior Petitions Attorney
Office of Petitions

UNITED STATES PATENT AND TRADEMARK OFFICE

COMMISSIONER FOR PATENTS
UNITED STATES PATENT AND TRADEMARK OFFICE
P.O. BOX 1450
ALEXANDRIA, VA 22313-1450
www.uspto.gov

Paper No.

BAKER BOTTS L.L.P.
2001 ROSS AVENUE
SUITE 600
DALLAS, TX 75201-2980

COPY MAILED

OCT 25 2004

OFFICE OF PETITIONS

In re Application of:	:	
Ryan Corley, Mark Pempsell and	:	
Erick Hansen	:	
Application No. 29/207,187	:	DECISION DISMISSING
Filed: June 9, 2004	:	PETITION UNDER
Title of Invention:	:	37 CFR 1.47(a)
OPTICAL STORAGE DISK	:	

This is in response to the Petition and Submission of Declaration, filed April 9, 2004, which is properly treated as a petition under 37 CFR 1.47(a), to allow the other inventor(s) to proceed with the application on behalf of himself or herself and the nonsigning inventor(s).

The petition is **granted**.

The above-identified application and papers have been reviewed and found in compliance with 37 CFR 1.47(a). This application is hereby accorded Rule 1.47(a) status.

Petitioner has shown that the non-signing inventor, Erick Hansen, refuses to join in the application.

As provided in Rule 1.47(a), this Office will forward notice of this application's filing to the non-signing inventor at the addresses given in the Petition. Notice of the filing of this application will also be published in the Official Gazette.

The application file is being returned to the Office of Initial Patent Examination for continued processing.

Telephone inquiries related to this decision may be directed to the undersigned at (571) 272-3232.

Derek L. Woods
Attorney Advisor
Office of Petitions

UNITED STATES PATENT AND TRADEMARK OFFICE

COMMISSIONER FOR PATENTS
UNITED STATES PATENT AND TRADEMARK OFFICE
P.O. BOX 1450
ALEXANDRIA, VA 22313-1450
www.uspto.gov

Mr. ERICK HANSEN
24004 HAMPTON DRIVE
UNIT B
VALENCIA, CA 91355

COPY MAILED

OCT 25 2004

LETTER OFFICE OF PETITIONS

In re Application of:	:
Ryan Corley, Mark Pempsell and	:
Erick Hansen	:
Application No. 29/207,187	:
Filed: June 9, 2004	:
Title of Invention:	:
OPTICAL STORAGE DISK	:

Dear Mr. Hansen:

You are named as an inventor in the above-identified United States patent application filed under the provisions of 35 U.S.C. 116 (United States Code) and 37 CFR 1.47(b), Rules of Practice in Patent Cases. Should a patent be granted on the application you will be designated therein as a joint inventor.

As a named inventor you are entitled to inspect any paper in the file wrapper of the application, order copies of all or any part thereof (at a prepaid cost per 37 CFR 1.19) or make your position of record in the application. Alternatively, you may arrange to do any of the preceding through a registered patent attorney or agent presenting written authorization from you. If you care to join the application, counsel of record (see below) would presumably assist you. Joining in the application would entail the filing of an appropriate oath or declaration by you pursuant to 37 CFR 1.63.

Telephone inquiries regarding this communication should be directed to the undersigned at (571) 272-3232. Requests for information regarding your application should be directed to the File Information Unit at (703) 308-2733. Information regarding how to pay for and order a copy of the application, or a specific paper in the application, should be directed to Certification Division at (703) 308-9726 or 1-800-972-6382 (outside the Washington D.C. area).

Derek L. Woods
Attorney Advisor
Office of Petitions

cc: BAKER BOTTS L.L.P.
2001 ROSS AVENUE
SUITE 600
DALLAS, TX 75201-2980

UNITED STATES PATENT AND TRADEMARK OFFICE

Commissioner for Patents
United States Patent and Trademark Office
P.O. Box 1450
Alexandria, VA 22313-1450
www.uspto.gov

BUHLER ASSOCIATES
BUHLER, KIRK A
1101 CALIFORNIA AVE.
SUITE 208
CORONA, CA 92881

In re Application of	:	
D'Shon A. BELL	:	
Application No. 29/207,192	:	DECISION ON PETITION
Filed: June 10, 2004	:	TO WITHDRAW
Attorney Docket No. 7DB01-01D	:	FROM RECORD
	:	

This is a decision on the Request to Withdraw as attorney or agent of record under 37 C.F.R. § 1.36(b), filed January 25, 2007.

The request is **DISMISSED** as moot.

A review of the file record indicates that the power of attorney given to Buhler Associates has been revoked by the assignee of the patent application on March 30, 2007. Accordingly, the request to withdraw under 37 C.F.R. § 1.36(b) is moot.

The correspondence address of record has been changed and the new correspondence address is the first copied address indicated below.

There are pending Office actions at the present time.

Telephone inquires concerning this decision should be directed to Diane Goodwyn at 571-272-6735.

April Wise
Petitions Examiner
Office of Petitions

UNITED STATES PATENT AND TRADEMARK OFFICE

Commissioner for Patents
United States Patent and Trademark Office
P.O. Box 1450
Alexandria, VA 22313-1450
www.uspto.gov

SIMON WALKER
SUITE 230
11782 HAMMERSMITH WAY
RICHMOND, BC V7A 5E2
CANADA

COPY MAILED

JAN 24 2006

OFFICE OF PETITIONS

In re Application of	:	
Simon Walker	:	
Application No. 29/207,198	:	ON PETITION
Filed: June 10, 2004	:	
Attorney Docket No. DFRB-ID-040615	:	

This is a decision on the petition under 37 CFR 1.137(b), filed October 11, 2005, to revive the above-identified application.

The petition is **DISMISSED**.

Any request for reconsideration of this decision must be submitted within TWO (2) MONTHS from the mail date of this decision. Extensions of time under 37 CFR 1.136(a) are permitted. The reconsideration request should include a cover letter entitled "**Renewed Petition under 37 CFR 1.137(b).**" This is **not** a final agency action within the meaning of 5 U.S.C. § 704.

The corrected formal drawing as required by the Notice of Allowability mailed March 2, 2005, was objected to by the Draftsperson under 37 CFR 1.84 or 1.52. This application cannot be revived until acceptable drawings of Figures 1-10 have been submitted. For applicant's convenience, a copy of the notice of draftsperson's patent drawing review dated January 23, 2006, is enclosed.

Further correspondence with respect to this matter should be addressed as follows:

By mail: Mail Stop PETITIONS
Commissioner for Patents
Post Office Box 1450
Alexandria, VA 22313-1450

By hand: Customer Service Window
Mail Stop Petitions
Randolph Building
401 Dulany Street
Alexandria, VA 22314

By fax: (571) 273-8300
ATTN: Office of Petitions

Telephone inquiries concerning this decision should be directed to the undersigned at (571) 272-3229.

Retta Williams

Retta Williams
Petitions Examiner
Office of Petitions

Enclosure: Notice of Draftsperson's Patent Drawing Review

UNITED STATES PATENT AND TRADEMARK OFFICE

Commissioner for Patents
United States Patent and Trademark Office
P.O. Box 1450
Alexandria, VA 22313-1450
www.uspto.gov

SIMON WALKER
11782 HAMMERSMITH WAY
SUITE 230
RICHMOND, BC V7A 5E2
CANADA

COPY MAILED

SEP 2 0 2007

OFFICE OF PETITIONS

In re Application of	:	
WALKER, Simon	:	
Application No. 29/207,198	:	DECISION ON REQUEST FOR
Filed: June 10, 2004	:	REVOCATION OF POWER
Attorney Docket No. **DO006US1**	:	OF ATTORNEY
	:	

This is a decision on the Request to Revoke the attorney or agent of record under 37 C.F.R. § 1.36(a), filed June 07, 2006.

The request is APPROVED.

A power of attorney, pursuant to § 1.32(b), may be revoked at any stage in the proceeding of a case by an applicant for patent (§ 1.41(b)) or an assignee of the entire interest of the applicant under § 3.71(b). Fewer than all of the applicants (or by fewer than the assignee of the entire interest of the applicant) may only revoke the power of attorney upon a showing of sufficient cause, and payment of the petition fee set forth § 1.17(h). For the assignee to take action a proper statement under § 3.73(b) is required.

The correspondence address of record has been changed and the new correspondence address is the address indicated below.

Telephone inquiries concerning this decision should be directed to Tredelle Jackson at 571-272-2783.

Amelia Au
Petitions Examiner
Office of Petitions

cc: **PEAK INNOVATIONS INC.**
ATTN: IP LEGAL DEPARTMENT
203 - 11782 HAMMERSMITH WAY
RICHMOND BC V7A-5E2 CA CANADA

UNITED STATES PATENT AND TRADEMARK OFFICE

Commissioner for Patents
United States Patent and Trademark Office
P.O. Box 1450
Alexandria, VA 22313-1450
www.uspto.gov

COPY MAILED

SEP 2 0 2007

OFFICE OF PETITIONS

PEAK INNOVATIONS INC.
ATTN: IP LEGAL DEPARTMENT
203 - 11782 HAMMERSMITH WAY
RICHMOND BC V7A-5E2 CA CANADA

In re Application of	:
Simon WALKER	:
Application No. 29/207,198	: DECISION ON PETITION
Filed: June 10, 2004	:
Attorney Docket No. **DO006US1**	:

This is a decision on the renewed petition under 37 CFR 1.137(b), filed February 15, 2006, to revive the above-identified design application.

The petition is **GRANTED**.

The application became abandoned for failure to timely pay the issue fee on or before June 02, 2005 as required by the Notice of Allowance and Fee(s) Due, mailed March 02, 2005, which set a statutory period for reply of three (3) months. Accordingly, the application became abandoned on June 03, 2005.

The petition satisfies the requirements of 37 CFR 1.137(b) in that petitioner has supplied (1) the reply in the form of the $400 issue fee, (2) the petition fee of $750, (3) a proper statement of unintentional delay, and (4) a terminal disclaimer and fee as required by 37 CFR 1.137(d). Accordingly, the failure to timely pay the issue fee as required by the Notice of Allowance and Fee(s) is accepted as being unintentionally delayed.

The terminal disclaimer is accepted and has been made of record. Any continuing application filed from this application must contain a copy of the terminal disclaimer. The copy of the terminal disclaimer must be filed with a cover letter requesting the terminal disclaimer be recorded on the continuing application. A copy of this decision should be attached to the cover letter.

Telephone inquiries concerning this decision should be directed to Tredelle Jackson at (571) 272-2783.

This application is being referred to Publishing Division for further processing in accordance with this decision on petition.

Amelia Au
Petitions Examiner
Office of Petitions

UNITED STATES PATENT AND TRADEMARK OFFICE

Commissioner for Patents
United States Patent and Trademark Office
P.O. Box 1450
Alexandria, VA 22313-1450
www.uspto.gov

SIMON WALKER
SUITE 230
11782 HAMMERSMITH WAY
RICHMOND, BC V7A 5E2
CANADA

COPY MAILED

JAN 24 2006

OFFICE OF PETITIONS

In re Application of	:	
Simon Walker	:	
Application No. 29/207,199	:	ON PETITION
Filed: June 10, 2004	:	
Attorney Docket No. DFRB-ID-040614	:	

This is a decision on the petition under 37 CFR 1.137(b), filed November 21, 2005, to revive the above-identified application.

The petition is **DISMISSED**.

Any request for reconsideration of this decision must be submitted within TWO (2) MONTHS from the mail date of this decision. Extensions of time under 37 CFR 1.136(a) are permitted. The reconsideration request should include a cover letter entitled "**Renewed Petition under 37 CFR 1.137(b).**" This is **not** a final agency action within the meaning of 5 U.S.C. § 704.

The corrected formal drawing as required by the Notice of Allowability mailed June 13, 2005, was objected to by the Draftsperson under 37 CFR 1.84 or 1.52. This application cannot be revived until acceptable drawings of Figures 1-10 have been submitted. For applicant's convenience, a copy of the notice of draftsperson's patent drawing review dated January 23, 2006, is enclosed.

Further correspondence with respect to this matter should be addressed as follows:

By mail: Mail Stop PETITIONS
Commissioner for Patents
Post Office Box 1450
Alexandria, VA 22313-1450

By hand: Customer Service Window
Mail Stop Petitions
Randolph Building
401 Dulany Street
Alexandria, VA 22314

By fax: (571) 273-8300
ATTN: Office of Petitions

Telephone inquiries concerning this decision should be directed to the undersigned at (571) 272-3229.

Retta Williams

Retta Williams
Petitions Examiner
Office of Petitions

Enclosure: Notice of Draftsperson's Patent Drawing Review

UNITED STATES PATENT AND TRADEMARK OFFICE

Commissioner for Patents
United States Patent and Trademark Office
P.O. Box 1450
Alexandria, VA 22313-1450
www.uspto.gov

SIMON WALKER
11782 HAMMERSMITH WAY
SUITE 230
RICHMOND, BC V7A 5E2
CANADA

COPY MAILED

SEP 2 0 2007

OFFICE OF PETITIONS

In re Application of	:	
Simon WALKER	:	
Application No. 29/207,199	:	DECISION ON PETITION
Filed: June 10, 2004	:	
Attorney Docket No. **DO006US1**	:	

This is a decision on the renewed petition under 37 CFR 1.137(b), filed February 15, 2006, to revive the above-identified design application.

The petition is **GRANTED**.

The application became abandoned for failure to timely pay the issue fee on or before September 13, 2005 as required by the Notice of Allowance and Fee(s) Due, mailed June 13, 2005, which set a statutory period for reply of three (3) months. Accordingly, the application became abandoned on September 14, 2005.

The petition satisfies the requirements of 37 CFR 1.137(b) in that petitioner has supplied (1) the reply in the form of the $400 issue fee, (2) the petition fee of $750, (3) a proper statement of unintentional delay, and (4) a terminal disclaimer and fee as required by 37 CFR 1.137(d). Accordingly, the failure to timely pay the issue fee as required by the Notice of Allowance and Fee(s) is accepted as being unintentionally delayed.

The terminal disclaimer and the drawings are accepted and have been made of record. Any continuing application filed from this application must contain a copy of the terminal disclaimer. The copy of the terminal disclaimer must be filed with a cover letter requesting the terminal disclaimer be recorded on the continuing application. A copy of this decision should be attached to the cover letter.

Telephone inquiries concerning this decision should be directed to Tredelle Jackson at (571) 272-2783.

This application is being referred to Publishing Division for further processing in accordance with this decision on petition.

Amelia Au
Petitions Examiner
Office of Petitions

cc: **PEAK INNOVATIONS INC.**
ATTN: IP LEGAL DEPARTMENT
203 - 11782 HAMMERSMITH WAY
RICHMOND BC V7A-5E2 CA CANADA

UNITED STATES PATENT AND TRADEMARK OFFICE

Commissioner for Patents
United States Patent and Trademark Office
P.O. Box 1450
Alexandria, VA 22313-1450
www.uspto.gov

COPY MAILED

SEP 2 0 2007

OFFICE OF PETITIONS

SIMON WALKER
11782 HAMMERSMITH WAY
SUITE 230
RICHMOND, BC V7A 5E2
CANADA

In re Application of	:	
WALKER, Simon	:	
Application No. 29/207,199	:	DECISION ON REQUEST FOR
Filed: June 10, 2004	:	REVOCATION OF POWER
Attorney Docket No. **DO006US1**	:	OF ATTORNEY
	:	

This is a decision on the Request to Revoke the attorney or agent of record under 37 C.F.R. § 1.36(a), filed June 07, 2006.

The request is APPROVED.

A power of attorney, pursuant to § 1.32(b), may be revoked at any stage in the proceeding of a case by an applicant for patent (§ 1.41(b)) or an assignee of the entire interest of the applicant under § 3.71(b). Fewer than all of the applicants (or by fewer than the assignee of the entire interest of the applicant) may only revoke the power of attorney upon a showing of sufficient cause, and payment of the petition fee set forth § 1.17(h). For the assignee to take action a proper statement under § 3.73(b) is required.

The correspondence address of record has been changed and the new correspondence address is the address indicated below.

Telephone inquiries concerning this decision should be directed to Tredelle Jackson at 571-272-2783.

Amelia Au
Petitions Examiner
Office of Petitions

cc: **PEAK INNOVATIONS INC.**
ATTN: IP LEGAL DEPARTMENT
203 - 11782 HAMMERSMITH WAY
RICHMOND BC V7A-5E2 CA CANADA

UNITED STATES PATENT AND TRADEMARK OFFICE

Commissioner for Patents
United States Patent and Trademark Office
P.O. Box 1450
Alexandria, VA 22313-1450
www.uspto.gov

SIMON WALKER
SUITE 230
11782 HAMMERSMITH WAY
RICHMOND BC V7A 5E2 CA CANADA

COPY MAILED

MAR 0 1 2006

OFFICE OF PETITIONS

ON PETITION

In re Application of
Simon Walker :
Application No. 29/207,200 :
Filed: June 10, 2004 :
Attorney Docket Number: **DFRB-ID-040613** :

This is a decision on the petition, filed February 15, 2006 under 37 CFR 1.137(b)[1], to revive the above identified application.

The petition is **GRANTED**.

This application became abandoned September 14, 2005 for failure to file corrected drawings in response to the Notice of Allowability mailed June 13, 2005. Accordingly, a Notice of Abandonment was mailed December 29, 2005.

All other requirements of 37 CFR 1.137(b), including the filing of a terminal disclaimer, having now been met, this matter is being referred to the Publishing Division for review of the drawings shown as having been received in the PTO on February 15, 2006.

Telephone inquiries concerning this matter may be directed to the undersigned Petitions Attorney at (571) 272-3212.

Patricia Faison-Ball

Patricia Faison-Ball
Senior Petitions Attorney
Office of Petitions

---

[1]Effective December 1, 1997, the provisions of 37 CFR 1.137(b) now provide that where the delay in reply was unintentional, a petition may be filed to revive an abandoned application or a lapsed patent pursuant to 37 CFR 1.137(b). A grantable petition filed under the provisions of 37 CFR 1.137(b) must be accompanied by:

(1) the required reply, unless previously filed. In a nonprovisional application abandoned for failure to prosecute, the required reply may be met by the filing of a continuing application. In an application or patent, abandoned or lapsed for failure to pay the issue fee or any portion thereof, the required reply must be the payment of the issue fee or any outstanding balance thereof.

(2) the petition fee as set forth in 37 CFR 1.17(m);

(3) a statement that the entire delay in filing the required reply from the due date for the reply until the filing of a grantable petition pursuant to 37 CFR 1.137(b) was unintentional. The Commissioner may required additional information where there is a question whether the delay was unintentional; and

(4) any terminal disclaimer (and fee as set forth in 37 CFR 1.20(d)) required pursuant to 37 CFR 1.137(c)).

UNITED STATES PATENT AND TRADEMARK OFFICE

Commissioner for Patents
United States Patent and Trademark Office
P.O. Box 1450
Alexandria, VA 22313-1450
www.uspto.gov

Simon Walker
Suite 203
11782 Hammersmith Way
Richmond BC V7A5E-2
CANADA

COPY MAILED

FEB 0 1 2006

OFFICE OF PETITIONS

In re Application of Walker :
Application No. 29/207,201 :
Filing Date: June 10, 2004 :
Attorney Docket No. DFRB-ID-040612 :

Decision on Petition

This is a decision on the petition under 37 CFR 1.137(b), filed October 11, 2005, to revive the above-identified application.

The petition is **DISMISSED**.

The above-identified application became abandoned for failure to submit corrected drawings in a timely manner in reply to the Notice of Allowability mailed March 2, 2005, which set a shortened statutory period for reply of three (3) months. Accordingly, the above-identified application became abandoned on June 3, 2005. A Notice of Abandonment was mailed on August 17, 2005.

A grantable petition under 37 CFR 1.137(b) must be accompanied by a terminal disclaimer and fee if the application was filed on or before June 8, 1995 or if the application is a design application.

Petitioner should submit a terminal disclaimer and the required terminal disclaimer fee of $65. A copy of a terminal disclaimer form is attached.

Any request for reconsideration must be submitted within TWO (2) MONTHS from the mail date of this decision. No further petition fee is required for the request. Extensions of time under 37 CFR 1.136(a) are permitted. The reconsideration request should include a cover letter entitled "Renewed Petition under 37 CFR 1.--------." This is **not** final agency action within the meaning of 5 U.S.C. § 704.

Further correspondence with respect to this matter should be addressed as follows:

By mail: Mail Stop Petition
Commissioner for Patents
P.O. Box 1450
Alexandria, VA 22313-1450

By facsimile: (571) 273-8300
Attn: Office of Petitions

Telephone inquiries regarding this communication should be directed to Petitions Attorney Steven Brantley at (571) 272-3203.

Charles Steven Brantley
Senior Petitions Attorney
Office of Petitions

Attached: Terminal Disclaimer form

UNITED STATES PATENT AND TRADEMARK OFFICE

Commissioner for Patents
United States Patent and Trademark Office
P.O. Box 1450
Alexandria, VA 22313-1450
www.uspto.gov

PEAK INNOVATIONS INC.
ATTN: IP LEGAL DEPARTMENT
203 - 11782 HAMMERSMITH WAY
RICHMOND, BC V7A-5E2 CA
CANADA

COPY MAILED

MAY 1 8 2007

OFFICE OF PETITIONS

In re Application of Walker	:	
Application No. 29/207,201	:	Decision on Petition
Filing Date: June 10, 2004	:	
Attorney Docket No. DFRB-ID-040612	:	

This is a decision on the renewed petition under 37 CFR 1.137(b), filed March 1, 2006, to revive the above-identified application.

The petition is **granted**.

The above-identified application became abandoned for failure to submit formal drawings in a timely manner in reply to the Notice of Allowability mailed March 2, 2005, which set a period for reply of three (3) months. The above-identified application became abandoned on June 3, 2005. A Notice of Abandonment was mailed on August 17, 2005.

The instant petition requests revival of the application.

Petitioner has met the requirements to revive the above-identified application pursuant to 37 CFR 1.137(b). Therefore, the petition is granted and the application is revived.

The Office of Publications will be informed of the instant decision and the application will be issued as a patent in due course.

Telephone inquiries regarding this communication should be directed to Petitions Attorney Steven Brantley at (571) 272-3203.

Charles Steven Brantley
Senior Petitions Attorney
Office of Petitions

UNITED STATES PATENT AND TRADEMARK OFFICE

Commissioner for Patents
United States Patent and Trademark Office
P.O. Box 1450
Alexandria, VA 22313-1450
www.uspto.gov

Simon Walker
Suite 203
11782 Hammersmith Way
Richmond BC V7A 5E2
CANADA

COPY MAILED

NOV 0 8 2005

OFFICE OF PETITIONS

In re Application of	:	
Walker	:	DECISION
Application No. 29/207,202	:	ON PETITION
Filed: June 10, 2004	:	
Attorney Docket No. DFRB-ID-040611	:	
For: ORNAMENTAL PICKET SPACER		

This is a decision on the petition under 37 CFR 1.137(b), filed October 11, 2005 (certificate of mailing date September 19, 2005), to revive the above-identified application.

The petition is **dismissed**.

Any request for reconsideration of this decision must be submitted within TWO (2) MONTHS from the mail date of this decision. Extensions of time under 37 CFR 1.136(a) are permitted. The reconsideration request should include a cover letter entitled "Renewed Petition under 37 CFR 1.137(b)." Petitioner is advised that this is not a final agency decision.

This application became abandoned for failure to timely file corrected formal drawings in response to the Notice of Allowability mailed March 2, 2005, which set a three month period for reply. This application became abandoned on June 3, 2005. A Notice of Abandonment was mailed on August 17, 2005.

A grantable petition pursuant to 37 CFR 1.137(b) must be accompanied by:

(1) the required reply, unless previously filed;

(2) the petition fee as set forth in 37 CFR 1.17(m);

(3) a statement that the **entire** delay in filing the required reply from the due date for the reply until the filing of a grantable petition pursuant to 37 CFR 1.137(b) was unintentional. The Commissioner may require additional information where there is a question whether the delay was unintentional; and

(4) any terminal disclaimer (and fee set forth in 37 CFR 1.20(d)) required pursuant to 37 CFR 1.137(d).

The instant petition does not satisfy requirements (1) and (4) above.

Regarding (1) above, the drawings submitted with the instant petition were objected to by the Draftsperson. Please find enclosed a Notice of Draftsperson's Patent Drawing Review for more details as to how to correct the drawings.

Regarding (4) above, 37 CFR 1.137(d) requires that a petition under 37 CFR 1.137(b) be accompanied by a terminal disclaimer and fee regardless of the period of abandonment in a **design** application. This application is a design application. Thus, petitioner is required to submit a terminal disclaimer. A blank terminal disclaimer form is enclosed for petitioner's convenience.

Further correspondence with respect to this matter should be addressed as follows:

By mail: Mail Stop PETITION
Commissioner for Patents
Post Office Box 1450
Alexandria, VA 22313-1450

By hand: U.S. Patent and Trademark Office
Customer Service Window, Mail Stop Petition
Randolph Building
401 Dulany Street
Alexandria, VA 22314

By FAX: (571) 273-8300 - ATTN: Office of Petitions

Telephone inquiries concerning this decision should be directed to the undersigned at (571) 272-3230.

E. Shirene Willis
Senior Petitions Attorney
Office of Petitions

enclosures: Notice of Draftsperson's Patent Drawing Review

blank Terminal Disclaimer to Accompany Petition -- PTO/SB/63

Privacy Act Statement

UNITED STATES PATENT AND TRADEMARK OFFICE

Commissioner for Patents
United States Patent and Trademark Office
P.O. Box 1450
Alexandria, VA 22313-1450
www.uspto.gov

Simon Walker
Suite 203
11782 Hammersmith Way
Richmond BC V7A 5E2
CANADA

COPY MAILED

MAR 14 2006

OFFICE OF PETITIONS

In re Application of	:	DECISION
Walker	:	ON PETITION
Application No. 29/207,202	:	
Filed: June 10, 2004	:	
Attorney Docket No. DFRB-ID-040611	:	
For: ORNAMENTAL PICKET SPACER		

This is a decision on the reconsideration petition under 37 CFR 1.137(b), filed December 8, 2005, to revive the above-identified application.

The petition is **dismissed**.

Any request for reconsideration of this decision must be submitted within TWO (2) MONTHS from the mail date of this decision. Extensions of time under 37 CFR 1.136(a) are permitted. The reconsideration request should include a cover letter entitled "Renewed Petition under 37 CFR 1.137(b)." Petitioner is advised that this is not a final agency decision.

This application became abandoned for failure to timely file corrected formal drawings in response to the Notice of Allowability mailed March 2, 2005, which set a three month period for reply. This application became abandoned on June 3, 2005. A Notice of Abandonment was mailed on August 17, 2005.

A grantable petition pursuant to 37 CFR 1.137(b) must be accompanied by:

(1) the required reply, unless previously filed;

(2) the petition fee as set forth in 37 CFR 1.17(m);

(3) a statement that the **entire** delay in filing the required reply from the due date for the reply until the filing of a grantable petition pursuant to 37 CFR 1.137(b) was unintentional. The Commissioner may require additional information where there is a question whether the delay was unintentional; and

(4) any terminal disclaimer (and fee set forth in 37 CFR 1.20(d)) required pursuant to 37 CFR 1.137(d).

The instant petition does not satisfy requirement (1) above.

Regarding (1) above, the drawings submitted with the instant petition were objected to by the Draftsperson. Please find enclosed a Notice of Draftsperson's Patent Drawing Review for more details as to how to correct the drawings.

Further correspondence with respect to this matter should be addressed as follows:

By mail: Mail Stop PETITION
Commissioner for Patents
Post Office Box 1450
Alexandria, VA 22313-1450

By hand: U.S. Patent and Trademark Office
Customer Service Window, Mail Stop Petition
Randolph Building
401 Dulany Street
Alexandria, VA 22314

By FAX: (571) 273-8300 - ATTN: Office of Petitions

Telephone inquiries concerning this decision should be directed to the undersigned at (571) 272-3230.

E. Shirene Willis
Senior Petitions Attorney
Office of Petitions

enclosure~~s~~: Notice of Draftsperson's Patent Drawing Review

Form PTO-948 (Rev. 06/03)
Application No. 29/207202

U.S. DEPARTMENT OF COMMERCE
U.S. Patent and Trademark Office

NOTICE OF DRAFTSPERSON'S PATENT DRAWING REVIEW

The drawing(s) filed (insert date) 12/08/2005 are:

A. ____ approved by the Draftsperson under 37 CFR 1.84 or 1.152.

B. ✓ objected to by the Draftsperson under 37 CFR 1.84 or 1.152 for the reasons indicated below. Corrected drawings are required.

1. DRAWINGS. 37 CFR 1.84(a): Acceptable categories of drawings: Black ink or Color (3 sets required).

___ Color drawings are not acceptable until petition is granted. Fig(s)___

___ Pencil and non black ink not permitted. Fig(s)___

2. PHOTOGRAPHS. 37 CFR 1.84(b)

___ One (1) full-tone set is required. Fig(s)___

___ Photographs may not be mounted. 37 CFR 1.84(e)

___ Photographs must meet paper size requirements of 37 CFR 1.84(f). Fig(s)___

___ Poor quality (half-tone). Fig(s)___

3. TYPE OF PAPER. 37 CFR 1.84(e)

___ Paper not flexible, strong, white, and durable. Fig(s)___

___ Erasures, alterations, overwritings. interlineations, folds, copy machine marks not accepted. Fig(s)___

4. SIZE OF PAPER. 37 CFR 1.84(f): Acceptable sizes:
21.0 cm by 29.7 cm (DIN size A4) or
21.6 cm by 27.9 cm (8 1/2x 11 inches)

___ All drawing sheets not the same size. Sheet(s)___

___ Drawings sheets not an acceptable size. Fig(s)___

5. MARGINS. 37 CFR 1.84(g): Acceptable margins:
Top 2.5 cm Left 2.5 cm Right 1.5 cm Bottom 1.0 cm

___ Margins not acceptable. Fig(s)___

___Top (T) ___ Left (L)
___Right (R) ___ Bottom (B)

6. VIEWS. 37 CFR 1.84(h)
REMINDER: Specification may require revision to correspond to drawing changes, e.g., if Fig. 1 is changed to Fig. 1A, Fig 1B and Fig. 1C, etc., the specification, at the Brief Description of the Drawings, must likewise be changed.

___Views not labeled separately or properly. Fig(s)___

7. SECTIONAL VIEWS. 37 CFR 1.84(h)(3)

___ Sectional designation should be noted with Arabic or Roman numbers. Fig(s)___

8. ARRANGEMENT OF VIEWS. 37 CFR 1.84(i)

___ Words do not appear on a horizontal, left-to-right fashion when page is either upright or turned so that the top becomes the right side, except for graphs. Fig(s)___

9. SCALE. 37 CFR 1.84(k)

___ Scale not large enough to show mechanism without crowding when drawing is reduced in size to two-thirds in reproduction. Fig(s)___

10. CHARACTER OF LINES, NUMBERS, & LETTERS. 37 CFR 1.84(l)

✓ Lines, numbers & letters not uniformly thick and well defined, clean, durable, and black (poor line quality). Fig(s) *1-11 (See comments)*

11. SHADING. 37 CFR 1.84(m)

___ Solid black areas pale. Fig(s) ___

___ Solid black shading not permitted. Fig(s)___

12. NUMBERS, LETTERS, & REFERENCE CHARACTERS. 37 CFR 1.84(p)

___ Numbers and reference characters not plain and legible. Fig(s)___

___ Figure legends are poor. Fig(s)___

___ Numbers and reference characters not oriented in the same direction as the view. 37 CFR 1.84(p)(1) Fig(s)___

___ English alphabet not used. 37 CFR 1.84(p)(2) Fig(s)___

___ Numbers, letters and reference characters must be at least 32 cm (1/8 inch) in height. 37 CFR 1.84(p)(3). Fig(s)___

13. LEAD LINES. 37 CFR 1.84(q)

___ Lead lines missing. Fig(s)___

14. NUMBERING OF SHEETS OF DRAWINGS. 37 CFR 1.84(t)

___ Sheets not numbered consecutively, and in Arabic numbers beginning with number 1. Sheet(s)___

15. NUMBERING OF VIEWS. 37 CFR 1.84(u)

___ Views not numbered consecutively, and in Arabic numerals, beginning with number 1. Fig(s)___

16. DESIGN DRAWINGS. 37 CFR 1.152

___ Surface shading shown not appropriate. Fig(s)___

___ Solid black surface shading is not permitted except when used to represent the color black as well as color contrast. Fig(s)___

COMMENTS:

* *Surface shadings are not acceptable, see attachment sample for proper shading or contact the examiner for details.*

Reviewer SON LAM

Date 03/08/2006

If you have questions, call (703) ~~305-8404~~ 305-0333 (EXT. 133)

Attachment to Paper No. ___

☆ U.S. GOVERNMENT PRINTING OFFICE: 2003-300-153

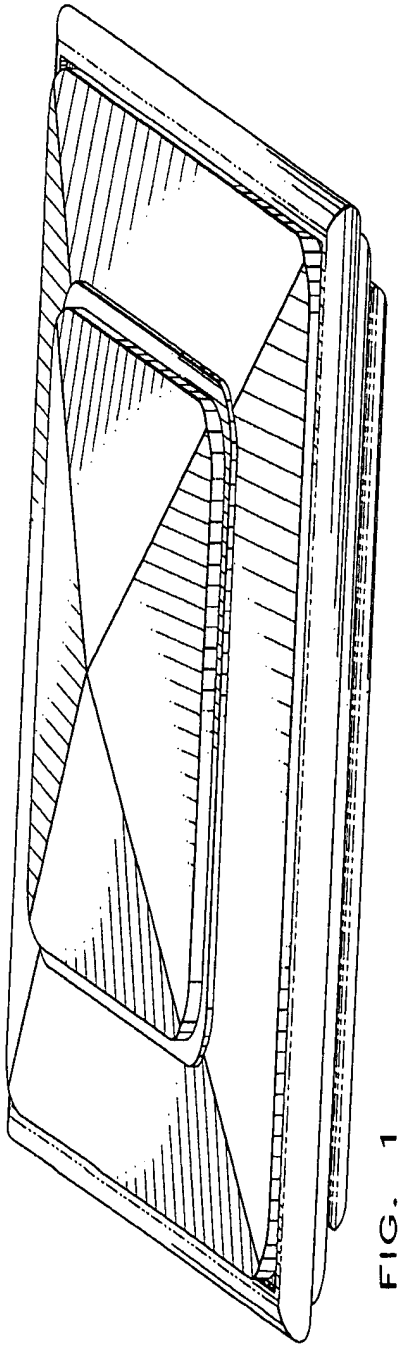

FIG. 1

UNITED STATES PATENT AND TRADEMARK OFFICE

Commissioner for Patents
United States Patent and Trademark Office
P.O. Box 1450
Alexandria, VA 22313-1450
www.uspto.gov

PEAK INNOVATIONS INC.
ATTN: IP LEGAL DEPARTMENT
203 - 11782 HAMMERSMITH WAY
RICHMOND BC V7A-5E2 CA CANADA

COPY MAILED

DEC 0 5 2007

OFFICE OF PETITIONS

In re Application of :
Walker :
Application No. 29/207,202 : ON PETITION
Filed: June 10, 2004 :
Attorney Docket No. DFRB-ID-040611 :
For: ORNAMENTAL PICKET SPACER

This is a decision on the renewed petition, filed April 11, 2006, under 37 CFR 1.137(b) to revive the above-identified application.

The petition is **dismissed** and the merits of the petition will not be addressed because the petition is not signed by a proper party. No additional petition fee will be due when petitioner files a reconsideration petition.

37 CFR 1.33(b) states that any amendments and other papers filed in an application must be signed by (1) an appointed registered attorney or agent; (2) a registered attorney or agent not appointed, but acting in a representative capacity, (3) an assignee under 3.71(b); or (4) all of the named inventors.

The renewed petition is signed by Andrea C. Thompson. Andrea C. Thompson has not provided an attorney registration number and a review of Office records does not reveal that a person named Andrea C. Thompson has been assigned a registration number. Andrea C. Thompson has not shown that she is an authorized representative of the assignee who has right to take action. Andrea C. Thompson is not the inventor.

In short, Andrea C. Thompson has not established that she is permitted to file amendments and other papers in this application.

In any reconsideration petition, applicant is encouraged to file a reconsideration petition selecting **one** of the following courses of action: Either (a) submit Andrea C. Thompson's registration number; (b) submit an appropriate 3.73(b) statement on behalf of the assignee (if there is one) establishing ownership of the invention signed by a person authorized to act on behalf of the assignee (the person authorized to act on behalf of the assignee should be Andrea C.

Thompson and in this manner, the signature on instant petition will be ratified); or (c) submit another copy of the petition signed by the inventor or an attorney/agent registered to practice before the Office.

Further correspondence with respect to this matter should be addressed as follows:

By mail: Mail Stop PETITION
Commissioner for Patents
Post Office Box 1450
Alexandria, VA 22313-1450

By hand: U.S. Patent and Trademark Office
Customer Service Window, Mail Stop Petition
Randolph Building
401 Dulany Street
Alexandria, VA 22314

By FAX: (571) 273-8300 – ATTN: Office of Petitions

Telephone inquiries concerning this decision should be directed to the undersigned at (571) 272-3230.

Shirene Willis Brantley

Shirene Willis Brantley
Senior Petitions Attorney
Office of Petitions

UNITED STATES PATENT AND TRADEMARK OFFICE

Commissioner for Patents
United States Patent and Trademark Office
P.O. Box 1450
Alexandria, VA 22313-1450
www.uspto.gov

PEAK INNOVATIONS INC.
ATTN: IP LEGAL DEPARTMENT
203 - 11782 HAMMERSMITH WAY
RICHMOND BC V7A-5E2 CA CANADA

COPY MAILED

FEB 29 2008

In re Application of	:	
Walker	:	
Application No. 29/207,202	:	ON PETITION
Filed: June 10, 2004	:	
Attorney Docket No. DFRB-ID-040611	:	
For: ORNAMENTAL PICKET SPACER		

This is a decision on the reconsideration petition, filed January 4, 2008, under 37 CFR 1.137(b) to revive the above-identified application.

This application became abandoned for failure to timely submit corrected formal drawings within three (3) months of the mail date of the Notice of Allowability, mailed on March 2, 2005. Accordingly, this application became abandoned on June 3, 2005. A Notice of Abandonment was mailed on August 17, 2005.

Applicant has submitted a proper reply in the form of corrected formal drawings, an acceptable statement of the unintentional nature of the delay in responding to the March 2, 2005 Notice of Allowability, a terminal disclaimer and required fee, and the petition fee.

The petition is **granted**.

This application is being forwarded to the Office of Data Management for processing into a patent.

Telephone inquiries concerning this decision should be directed to the undersigned at (571) 272-3230.

Shirene Willis Brantley

Shirene Willis Brantley
Senior Petitions Attorney
Office of Petitions

UNITED STATES PATENT AND TRADEMARK OFFICE

COMMISSIONER FOR PATENTS
UNITED STATES PATENT AND TRADEMARK OFFICE
P.O. BOX 1450
ALEXANDRIA, VA 22313-1450
www.uspto.gov

Walker, Simon
Suite 203
11782 Hammersmith Way
Richmond BC V7A5E-2 CA CANADA

COPY MAILED

NOV 01 2005

OFFICE OF PETITIONS

In re Application of	:	
Walker	:	DECISION ON PETITION
Application No. 29/207,203	:	
Filed: June 10, 2004	:	
Docket No.: DFRB-ID-040616	:	

This is a decision on the petition under 37 CFR 1.137(b), filed October 11, 2005, to revive the above-identified application.

The petition is **GRANTED**.

This application became abandoned June 3, 2005 for failure to timely submit corrected drawings as required by the Notice of Allowability (Notice) mailed March 2, 2005. The Notice set a three month statutory period for reply. Notice of Abandonment was mailed August 17, 2005.

A grantable petition pursuant to 37 C.F.R. § 1.137(b) must be accompanied by: (1) the required reply to the outstanding Office action or notice, unless previously filed; (2) the petition fee as set forth in 37 C.F.R. § 1.17(m); (3) a statement that the entire delay in filing the required reply from the due date for the reply until the filing of a grantable petition pursuant to 37 C.F.R. § 1.137(b) was unintentional; and (4)any terminal disclaimer (and fee set forth in 37 C.F.R. § 1.20(d)) required pursuant to 37 C.F.R. § 1.137(c).

The instant petition has been reviewed and found in compliance with the provisions of 37 C.F.R. § 1.137(b). Accordingly, the failure to timely submit a proper reply to the Notice is accepted as having been unintentionally delayed.

This application will be forwarded to the Publications Division for further processing.

Telephone inquiries concerning this matter may be directed to the undersigned at (571) 272-3205.

Alesia M. Brown
Petitions Attorney
Office of Petitions

UNITED STATES PATENT AND TRADEMARK OFFICE

Commissioner for Patents
United States Patent and Trademark Office
P.O. Box 1450
Alexandria, VA 22313-1450
www.uspto.gov

SIMON WALKER
11782 HAMMERSMITH WAY
SUITE 203
RICHMOND BC V7A5E-2 CA
CANADA

COPY MAILED

NOV 25 2005

OFFICE OF PETITIONS

In re Application of	:	
Simon Walker	:	
Application No. 29/207,204	:	DECISION ON PETITION
Filed: June 10, 2004	:	
Attorney Docket No. DFRB-ID-040617	:	

This is a decision on the petition to revive the above-identified application under 37 CFR 1.137(b), filed October 11, 2005.

The petition is **DISMISSED**.

Any request for reconsideration of this decision must be submitted within TWO (2) MONTHS from the mail date of this decision. Extensions of time under 37 CFR 1.136(a) are permitted. The reconsideration request should include a cover letter entitled "Renewed Petition Under 37 CFR 1.137(b)." This is **not** a final agency decision within the meaning of 5 USC 704.

The above-identified application became abandoned for failure to timely pay the issue fee and file corrected drawings in response to the Notice of Allowance and Notice of Allowability mailed March 2, 2005. These Notices set a statutory period for reply of three months. No extensions of time under 37 CFR 1.136(a) were available. No issue fee having been received, the above identified application became abandoned on June 3, 2005. A Notice of Abandonment was mailed on August 17, 2005.

A grantable petition under 37 CFR 1.137(b) must be accompanied by: (1) the required reply, unless previously filed; (2) the petition fee as set forth in 37 CFR 1.17(m); (3) a statement that the entire delay in filing the required reply from the due date for the reply until the filing of a grantable petition pursuant to 37 CFR 1.137(b) was unintentional; and (4) any terminal disclaimer (and fee as set forth in 37 CFR 1.20(d)) required by 37 CFR 1.137(d).

The instant petition lacks item (4). The instant application is a design application, and accordingly requires a terminal disclaimer and accompanying fee. See 37 CFR 1.137(d).

Further correspondence concerning this application should be addressed as follows:

By mail: Mail Stop Petitions
Commissioner for Patents
P.O. Box 1450
Alexandria VA 22313-1450

By FAX: (571)273-8300
Attn: Office of Petitions

Telephone inquiries concerning this decision should be directed to the undersigned at 571-272-3207.

Cliff Congo
Petitions Attorney
Office of Petitions

UNITED STATES PATENT AND TRADEMARK OFFICE

Commissioner for Patents
United States Patent and Trademark Office
P.O. Box 1450
Alexandria, VA 22313-1450
www.uspto.gov

SIMON WALKER
11782 HAMMERSMITH WAY
SUITE 203
RICHMOND BC V7A5E-2 CA
CANADA

COPY MAILED

FEB 08 2006

OFFICE OF PETITIONS

In re Application of	:	
Simon Walker	:	
Application No. 29/207,204	:	DECISION ON PETITION
Filed: June 10, 2004	:	
Attorney Docket No. DFRB-ID-040617	:	

This is a decision on the renewed petition to revive the above-identified application under 37 CFR 1.137(b), filed January 9, 2006.

The petition is **GRANTED**.

The above-identified application became abandoned for failure to timely pay the issue fee and file corrected drawings in response to the Notice of Allowance and Notice of Allowability mailed March 2, 2005. These Notices set a statutory period for reply of three months. No extensions of time under 37 CFR 1.136(a) were available. No issue fee having been received, the above identified application became abandoned on June 3, 2005. A Notice of Abandonment was mailed on August 17, 2005. Applicant filed a petition to revive on October 11, 2005. However, because the petition lacked a terminal disclaimer, the petition was dismissed in a decision mailed on November 25, 2005.

With the instant petition, applicant has submitted a terminal disclaimer and fee. The other requirements for a grantable petition were previously satisfied on October 11, 2005.

The matter is being forwarded to the Office of Patent Publication for processing into a patent.

Telephone inquiries concerning this decision should be directed to the undersigned at 571-272-3207.

Cliff Congo
Petitions Attorney
Office of Petitions

UNITED STATES PATENT AND TRADEMARK OFFICE

Commissioner for Patents
United States Patent and Trademark Office
P.O. Box 1450
Alexandria, VA 22313-1450
www.uspto.gov

Simon Walker
Suite 203
11782 Hammersmith Way
Richmond British Columbia V7A 5E2
CANADA AIR MAIL

COPY MAILED

NOV 14 2005

OFFICE OF PETITIONS

In re Application of	:	
Simon Walker	:	
Application No. 29/207,205	:	DECISION ON PETITION
Filed: June 10, 2004	:	
Title: Picket Spacer	:	

This is a decision on the petition under 37 CFR 1.137(b), filed October 11, 2005, to revive the above-identified application.

The petition is **dismissed.**

Any request for reconsideration of this decision must be submitted within TWO (2) MONTHS from the mail date of this decision. Extensions of time under 37 CFR 1.136(a) are permitted. The reconsideration request should include a cover letter entitled "Renewed Petition under 37 CFR 1.137(b)." No additional petition fee is necessary.

This application became abandoned on June 3, 2005, for failure to submit timely corrected drawings as required by the Notice of Allowability mailed on March 2, 2005. A Notice of Abandonment was mailed on August 17, 2005.

The provisions of 37 CFR 1.137(b) provide that where the delay in reply was unintentional, a petition may be filed to revive an abandoned application or a lapsed patent pursuant to 37 CFR 1.137(b). A grantable petition pursuant to 37 CFR 1.137(b) must be accompanied by:

(1) The reply required to the outstanding Office action or notice, unless previously filed. In a nonprovisional

application abandoned for failure to prosecute, the required reply may be met by the filing of a continuing application. In a nonprovisional utility or plant application filed on or after June 8, 1995, and abandoned for failure to prosecute, the required reply may also be met by the filing of a request for continued examination in compliance with § 114. In an application or patent, abandoned or lapsed for failure to pay the issue fee or any portion thereof, the required reply must include payment of the issue fee or any outstanding balance. In an application, abandoned for failure to pay the publication fee, the required reply must include payment of the publication fee.

(2) The petition fee as set forth in 37 CFR 1.17(m);

(3) A statement that the entire delay in filing the required reply from the due date for the reply until the filing of a grantable petition pursuant to this paragraph was unintentional. The Director may require additional information where there is a question whether the delay was unintentional; and

(4) Any terminal disclaimer (and fee set forth in § 1.20(d)) required pursuant to paragraph (d) of this section.

The present petition does not satisfy requirement (4) above.

A terminal disclaimer and the $65.00 terminal disclaimer fee are required under 37 CFR 1.137(d) if the application is a design application. The terminal disclaimer must dedicate to the public a terminal part of the term of any patent granted the application equivalent to the period of abandonment of the application, and must also apply to any patent granted on any application containing a specific reference under 35 U.S.C. 120, 121 or 365(c) to the application for which revival is sought.

Accordingly, any renewed petition to revive must be accompanied by a terminal disclaimer and fee, dedicating to the public a terminal part of the term of any patent granted thereon equivalent to the period of abandonment of the application. See 37 CFR 1.137(d)(1). A terminal disclaimer form (PTO/SB/63) accompanies the decision for petitioner's convenience.

Further correspondence with respect to this matter should be addressed as follows and **to the attention of Senior Petitions Attorney Christina Tartera Donnell:**

By mail: Mail Stop Petition
Commissioner for Patents
P.O. Box 1450
Alexandria, VA 22313-1450

By FAX: (571) 273-8300
Attn: Office of Petitions

By hand: Customer Service Window
Randolph Building
401 Dulany Street
Alexandria, VA 22314

Telephone inquiries related to this decision may be directed to the undersigned at (571) 272-3211.

Christina Tartera Donnell

Christina Tartera Donnell
Senior Petitions Attorney
Office of Petitions

Enclosure: Terminal Disclaimer to Accompany Petition (Form PTO/SB/63)

UNITED STATES PATENT AND TRADEMARK OFFICE

Commissioner for Patents
United States Patent and Trademark Office
P.O. Box 1450
Alexandria, VA 22313-1450
www.uspto.gov

Simon Walker
Suite 203
11782 Hammersmith Way
Richmond British Columbia V7A 5E2
CANADA AIR MAIL

COPY MAILED

JAN 11 2006

OFFICE OF PETITIONS

In re Application of	:	
Simon Walker	:	
Application No. 29/207,205	:	DECISION ON PETITION
Filed: June 10, 2004	:	
Title: Picket Spacer	:	

This is in response to the communication filed on December 8, 2005, which is being treated as a renewed petition under 37 CFR 1.137(b) to revive the above-identified application.

This application became abandoned on June 3, 2005, for failure to submit timely corrected drawings as required by the Notice of Allowability mailed on March 2, 2005. A Notice of Abandonment was mailed on August 17, 2005.

The Office acknowledges the receipt of the terminal disclaimer and fee. 37 CFR 1.137(c)(1) states that a terminal disclaimer filed pursuant to this rule must dedicate to the public a terminal part of the term of any patent granted thereon equivalent to the lesser of: 1) the period of abandonment of the application; or 2) the period extending beyond twenty years from the date on which the application for patent was filed in the United States, or, if the application contains a specific reference to an earlier filed application(s) under 35 U.S.C. 120, 121, or 365(c). Accordingly, the period of the terminal disclaimer filed on December 27, 2005, will be equivalent to the lesser period (1) or (2), as noted above, for this application.

Petitioner has met the requirements under 37 CFR 1.137(b). Accordingly, the petition is **granted**.

This matter is being referred to the Office of Patent Publications.

Telephone inquiries concerning the issuance of the application into a patent should be directed to the Office of Patent Publication, Customer Service at (571) 272-4200. Telephone inquiries related to this decision may be directed to the undersigned at (571) 272-3211.

C. T. Donnell

Christina Tartera Donnell
Senior Petitions Attorney
Office of Petitions

UNITED STATES PATENT AND TRADEMARK OFFICE

Commissioner for Patents
United States Patent and Trademark Office
P.O. Box 1450
Alexandria, VA 22313-1450
www.uspto.gov

WELSH & FLAXMAN LLC
2000 DUKE STREET, SUITE 100
ALEXANDRIA, VA 22314

COPY MAILED

NOV 02 2005

OFFICE OF PETITIONS

In re Application of

Mike Gibson

Application No. 29/207,209

Filed: June 10, 2004

Attorney Docket No. GIB-001

DECISION ON PETITION

This is a decision on the petition under 37 CFR §1.137(b), October 21, 2005, to revive the above-identified application.

The petition is **dismissed**.

Any request for reconsideration of this decision must be submitted within TWO (2) MONTHS from the mail date of this decision. Extensions of time under 37 CFR 1.136(a) are permitted. The reconsideration request should include a cover letter entitled "Renewed Petition" under 37 CFR 1.137(b)."

This application became abandoned for failure to respond in a timely manner to the Notice of Allowance and Issue Fee Due mailed April 4, 2005. The notice allowed a statutory period for reply of three months from its mailing date. No reply was received within the allowable period, and the application became abandoned on July 5, 2005. A Notice of Abandonment was mailed on August 8, 2005.

Effective December 1, 1997, the provisions of 37 CFR 1.137(b) now provide that where the delay in reply was unintentional, a petition may be filed to revive an abandoned application or a lapsed patent pursuant to 37 CFR 1.137(b). A grantable petition pursuant to 37 CFR 1.137(b) must be accompanied by:

(1) the required reply, unless previously filed. In a non-provisional application abandoned for failure to prosecute, the required reply may be met by the filing of a continuing application. In an application or patent, abandoned or lapsed for failure to pay the issue fee, or any portion thereof, the required reply must be the payment of the issue fee or any outstanding balance thereof.

(2) the petition fee as set forth in 37 CFR 1.17(m);

(3) a statement that the entire delay in filing the required reply from the due date for the reply until the filing of a grantable petition pursuant to 37 CFR 1.137(b) was unintentional. The Commissioner may require additional information where there is a question whether the delay was unintentional; and

(4) any terminal disclaimer (and fee set forth in 37 CFR 1.20(d)) required pursuant to 37 CFR 1.137(d).

The instant petition does not satisfy the requirements of item (4) above.

As to item (4), the terminal disclaimer was not found with the petition papers. The subject application is a design application, therefore; a terminal disclaimer is required in order to revive the application. Any renewed petition filed must be accompanied by the completed terminal disclaimer form, which is enclosed for petitioner's convenience. Pursuant to 37 CFR 1.137(d), the terminal disclaimer must dedicate to the public a terminal part of the term of any patent granted from this application that is equivalent to the period of abandonment of the application.

Further correspondence with respect to this matter should be addressed as follows:

By mail: Mail Stop Petitions
Commissioner for Patents
United States Patent and Trademark Office
Box 1450
Alexandria, VA 22313-1450

By facsimile: (571) 273-8300

Telephone inquiries concerning this matter may be directed to the undersigned at (571) 272-3222.

Kenya A. McLaughlin

Kenya A. McLaughlin
Petitions Attorney
Office of Petitions

Enclosure: "Terminal Disclaimer to Accompany Petition"

UNITED STATES PATENT AND TRADEMARK OFFICE

Commissioner for Patents
United States Patent and Trademark Office
P.O. Box 1450
Alexandria, VA 22313-1450
www.uspto.gov

Welsh & Flaxman, LLC
2000 Duke Street, Suite 100
Alexandria, VA 22314

COPY MAILED

NOV 18 2005

OFFICE OF PETITIONS

In re Application of

Mike Gibson

Application No. 29/207,209

Filed: June 10, 2004

Attorney Docket No. GIB-001

DECISION ON

PETITION

This is a decision on the renewed petition under 37 CFR 1.137(b), filed November 8, 2005, to revive the above-identified application.

The renewed petition is **granted**.

This application became abandoned for failure to respond in a timely manner to the Notice of Allowance and Issue Fee Due mailed April 4, 2005. The notice allowed a statutory period for reply of three months from its mailing date. No reply was received within the allowable period, and the application became abandoned on July 5, 2005. A Notice of Abandonment was mailed on August 8, 2005. A petition under 37 CFR 1.137(b) was filed on October 21, 2005, and dismissed by a decision mailed November 2, 2005.

The terminal disclaimer, filed November 8, 2005, is noted.

The application is being forwarded to the Office of Patent Publications for further processing.

Telephone inquiries concerning this matter may be directed to the undersigned at (571) 272-3222.

Kenya A. McLaughlin

Kenya A. McLaughlin
Petitions Attorney
Office of Petitions

SPE RESPONSE FOR CERTIFICATE OF CORRECTION

Paper No.: _____

DATE : May 5, 2006

TO SPE OF : ART UNIT 2911 Pamela J Burgess 71603

SUBJECT : Request for Certificate of Correction for Appl. No.: 29/207210 Patent No.: D512199

Please respond to this request for a certificate of correction within 7 days.

Please review the requested changes/corrections as shown in the **COCIN** document(s) in the IFW application image. No new matter should be introduced, nor should the scope or meaning of the claims be changed.

Please complete the response (see below) and forward the completed response to scanning using document code **COCX**.

Antonio Johnson

Certificates of Correction Branch

703-308-9390 ext. 111

Thank You For Your Assistance

The request for issuing the above-identified correction(s) is hereby:

Note your decision on the appropriate box.

- ☒ **Approved** — **All** changes apply.
- ☐ **Approved in Part** — Specify below which changes **do not** apply.
- ☐ **Denied** — State the reasons for denial below.

Comments: _____

ALAN P. DOUGLAS
SUPERVISORY PATENT EXAMINER
TECHNOLOGY CENTER 2900

SPE — Art Unit 2911

UNITED STATES PATENT AND TRADEMARK OFFICE

Commissioner for Patents
United States Patent and Trademark Office
P.O. Box 1450
Alexandria, VA 22313-1450
www.uspto.gov

Stephen E. Feldman, P.C.
12 East 41st Street
New York NY 10017

COPY MAILED

MAR 25 2008

OFFICE OF PETITIONS

In re Application of :
Danny Lai :
Application No. 29/207,214 :
Filed: 06/08/2004 :
Title: DIAMOND SETTING :

DECISION ON PETITION

This is a decision on the petition under the unintentional provisions of 37 CFR 1.137(b), filed December 18, 2007, to revive the above-identified application.

The petition is **GRANTED**.

This application became abandoned for failure to timely pay the issue fee on or before August 16, 2007, as required by the Notice of Allowance and Fee(s) Due mailed May16, 2007. Accordingly, this application became abandoned on August 17, 2007. A Notice of Abandonment was mailed on September 14, 2007.

The petition satisfies the requirements of 37 CFR 1.137(b) in that petitioner has supplied (1) the reply in the form of payment of the issue fee, (2) the petition fee, (3) a proper statement of unintentional delay, and (4) a terminal disclaimer (and fee).

The terminal disclaimer submitted on December 18, 2007, is accepted.

This matter is being forwarded to the Office of Patent Publication for processing into a patent.

Telephone inquiries concerning the issuance of the application into a patent should be directed to the Office of Patent Publication, Customer Service at (571) 272-4200.

Telephone inquiries specifically concerning this decision should be directed to the undersigned at (571) 272-3211.

Christina T. Donnell

Christina Tartera Donnell
Senior Petitions Attorney
Office of Petitions

SPE RESPONSE FOR CERTIFICATE OF CORRECTION

DATE : 11-6-09

Paper No.: _____

TO SPE OF : ART UNIT 2914

SUBJECT : Request for Certificate of Correction for Appl. No. 29/207264 Patent No.: D519207

Please respond to this request for a certificate of correction within 7 days.

FOR IFW FILES: Should cofc be approved

Please review the requested changes/corrections as shown in the **COCIN** document(s) in the IFW application image. No new matter should be introduced, nor should the scope or meaning of the claims be changed.

Please complete the response (see below) and forward the completed response to scanning using document code **COCX**.

FOR PAPER FILES:

Please review the requested changes/corrections as shown in the attached certificate of correction. Please complete this form (see below) and forward it with the file to:

Certificates of Correction Branch (CofC)
Randolph Square – 9D10-A
Palm Location 7580

Emma Yang
Certificates of Correction Branch
703-756-1814 _____

Thank You For Your Assistance

The request for issuing the above-identified correction(s) is hereby:
Note your decision on the appropriate box.

- ☒ **Approved** — **All** changes apply.
- ☐ **Approved in Part** — Specify below which changes **do not** apply.
- ☐ **Denied** — State the reasons for denial below.

Comments: _____

IAN SIMMONS
SUPERVISORY PATENT EXAMINER

_____ **SPE**

2916 **Art Unit**

UNITED STATES PATENT AND TRADEMARK OFFICE

Commissioner for Patents
United States Patent and Trademark Office
P.O. Box 1450
Alexandria, VA 22313-1450
www.uspto.gov

JUN 25 2004

JEFFER, MANGELS, BUTLER & MARMARO, LLP
1900 AVENUE OF THE STARS, 7TH FLOOR
LOS ANGELES CA 90067

In re Application of	:	
Fiona Adams et al	:	
Serial No.: 29/207,293	:	**REQUEST FOR EXPEDITED EXAMINATION**
Filed: June 11, 2004	:	
For: Footwear Upper	:	

This is in response to the Request for expedited examination applicant filed June 11, 2004, to expedite the above-identified application under the provisions of 37 CFR 1.155.

Applicant has satisfied the provisions set forth in 37 CFR 1.155, thus the petition is **GRANTED**.

The application will be forwarded to the examiner for action on the merits commensurate with this decision.

Should there be any questions with regard to this letter please contact John Kittle by letter addressed to the Director, Technology Center 3700/2900, and P.O. BOX 1450 ALEXANDRIA, VA 22313-1450 or by telephone at (703) 308-0873 or by facsimile transmission at (703) 308-3139.

John E. Kittle

John E. Kittle
Director
Technology Center 3700/2900

UNITED STATES PATENT AND TRADEMARK OFFICE

Commissioner for Patents
United States Patent and Trademark Office
P.O. Box 1450
Alexandria, VA 22313-1450
www.uspto.gov

GALLAGHER & LATHROP, A PROFESSIONAL CORPORATION
601 CALIFORNIA ST
SUITE 1111
SAN FRANCISCO CA 94108

COPY MAILED

MAY 0 2 2008

OFFICE OF PETITIONS

In re Application of	:	
Johnson, Gregory F.	:	
Application No. 29/207,338	:	DECISION ON PETITION
Filed: June 10, 2004	:	
Attorney Docket No. GFJ002	:	

This is a decision on the petition under the unintentional provisions of 37 CFR 1.137(b), filed April 4, 2008, to revive the above-identified application.

The petition is **GRANTED**.

The petition satisfies the requirements of 37 CFR 1.137(b) in that petitioner has supplied (1) the reply in the form of Replacement Drawings, (2) the petition fee, (3) a proper statement of unintentional delay, and (4) a terminal disclaimer.

Telephone inquiries concerning this decision should be directed to the undersigned at (571) 272-3206.

This matter is being referred to the Office of Data Management for processing into a patent.

Liana Walsh
Petitions Examiner
Office of Petitions

UNITED STATES PATENT AND TRADEMARK OFFICE

Commissioner for Patents
United States Patent and Trademark Office
P.O. Box 1450
Alexandria, VA 22313-1450
www.uspto.gov

8/19/05

THE PROCTER & GAMBLE COMPANY
INTELLECTUAL PROPERTY DIVISION
WINTON HILL TECHNICAL CENTER - BOX 161
6110 CENTER HILL AVENUE
CINCINNATI OH 45224

In re Application of	
Tanya Nicole Blasko	:
Serial No.: 29/207,473	:
Filed: June 14, 2004	: PETITION DECISION
Attorney Docket No.: D-920	:

This is in response to applicant's Petition to Withdraw Holding of Abandonment, which is being treated as a Petition under 37 CFR 1.181, filed by facsimile April 28, 2005, based on having responded to the Office action.

A review of the file history shows that a Notice to File Missing Parts was mailed August 4, 2004, setting a two month period to submit a signed oath or declaration and a surcharge. As no response was submitted by October 4, 2004, a Notice of Abandonment was mailed April 22, 2005. This petition followed.

Applicant has provided a copy of the response, which includes a Certificate of Transmission date of August 12, 2004. While this paper was never associated with the application, it is clear that the response was timely filed, and the application was clearly abandoned in error.

Applicant's petition is **GRANTED.**

The application will be promptly forwarded to an Examiner for initial examination in due course.

Should there be any questions with respect to this decision, please contact Sandra Morris; by mail addressed to: Director, Technology Center 1700/2900, P.O. Box 1450, Alexandria, VA 22313-1450; or by telephone at (571) 272-2622.

Jacqueline M. Stone

Jacqueline Stone
Director, Technology Center 1700/2900

UNITED STATES PATENT AND TRADEMARK OFFICE

Commissioner for Patents
United States Patent and Trademark Office
P.O. Box 1450
Alexandria, VA 22313-1450
www.uspto.gov
DIW 09-04

THE GOODYEAR TIRE & RUBBER COMPANY
D/823
1144 EAST MARKET STREET
AKRON OH 44316-0001

COPY MAILED

SEP 10 2004

OFFICE OF PETITIONS

In re Application of	:
Poling, Schmalix, Marazzi, Brayer,	: DECISION REFUSING STATUS
Losey, Allen, Landers, and Ratliff	: UNDER 37 CFR 1.47(a)
Application No. 29/207,482	:
Filed: 15 June, 2004	:
Atty Docket No. DN2004095	:

This is in response to the petition filed under 37 CFR 1.47(a) on 11 August, 2004.

The petition is **DISMISSED**.

Rule 47 applicant is given TWO MONTHS from the mailing date of this decision to reply, correcting the below-noted deficiencies. Any reply should be entitled "Request for Reconsideration of Petition Under 37 CFR 1.47(a)," and should only address the deficiencies noted below, except that the reply may include an oath or declaration executed by the non-signing inventor. **FAILURE TO RESPOND WILL RESULT IN ABANDONMENT OF THE APPLICATION.** Extensions of time may be obtained in accordance with 37 CFR 1.136(a).

The above-identified application was filed on 15 June, 2004, without an executed oath or declaration. Accordingly, on 26 July, 2004, a Notice to File Missing Parts of Nonprovisional Application was mailed, requiring, *inter alia*, an executed oath or declaration and a surcharge for its late filing.

In response, on 11 August, 2004, petitioners filed a declaration naming David Charles Poling, Charles Kenneth Schmalix, Eric John Marazzi, Randall Raymond Brayer, Robert Allen Losey, Walter Dale Allen, Samuel Patrick Landers, and Billy Joe Ratliff, Jr., as joint inventors, signed by all joint inventors except Ratliff on behalf of themselves and joint inventor Ratliff, the present

petition, petition fee, and the late-filing surcharge.

Petitioners state that joint inventor Ratliff was sent a copy of the application but has failed to return an executed declaration.

A grantable petition under 37 CFR 1.47(a) requires:

(1) proof that the non-signing inventor cannot be reached or located, notwithstanding diligent effort, or refuses to sign the oath or declaration after having been presented with the application papers (specification, claims and drawings);

(2) an acceptable oath or declaration in compliance with 35 U.S.C. §§ 115 and 116;

(3) the petition fee;

(4) a surcharge of $130 or $65 (small entity) if the petition and/or declaration is not filed at the time of filing the application, and

(5) a statement of the last known address of the non-signing inventor.

The petition lacks item (1).

In regards to item (1), petitioners have not provided proof that joint inventor Ratliff was ever sent or presented with a copy of the application as filed (specification, including claims, drawings, if any, and the declaration).[1] The petition states that the application papers were sent to Ratliff, but it is unclear whether the statement was made with first-hand knowledge that the papers had been sent.

Petitioners may show proof that a copy of the application was sent or given to the non-signing inventor for review by providing a copy of the cover letter transmitting the application papers (specification, including claims, drawings, if any, and the declaration) to the non-signing inventor or details given in an affidavit or declaration of facts by a person having first-hand knowledge of the details.

Likewise, before a *bona fide* refusal to sign the declaration can be alleged, petitioners must show that a copy of the application was sent or given to the inventor. If the inventor refuses in writing, petitioners must submit a copy of that written refusal with any renewed petition. If the refusal was made orally to a person, then that person must provide details of the refusal in an affidavit or declaration of fact.

---

[1] MPEP 409.03(d).

With regards to the declaration, the Office is construing the petition to mean that all eight (8) pages of the declaration, naming each joint inventor, were sent to each joint inventor. Petitioners **must** inform the Office if this is an incorrect interpretation.

Further correspondence with respect to this matter should be addressed as follows:

By mail: Mail Stop Petition
Commissioner for Patents
P.O. Box 1450
Alexandria, VA 22313-1450

By FAX: (703) 872-9306
Attn: Office of Petitions

By hand: U.S. Patent and Trademark Office
220 20th Street S.
Customer Window, Mail Stop Petition
Crystal Plaza 2, Lobby, Room 1B03
Arlington, VA 22202

Telephone inquiries related to this decision should be directed to the undersigned at 703-308-6918.

D Wood

Douglas I. Wood
Senior Petitions Attorney
Office of Petitions

UNITED STATES PATENT AND TRADEMARK OFFICE

Commissioner for Patents
United States Patent and Trademark Office
P.O. Box 1450
Alexandria, VA 22313-1450
www.uspto.gov
DIW 12-04

THE GOODYEAR TIRE & RUBBER COMPANY
D/823
1144 EAST MARKET STREET
AKRON OH 44316-0001

COPY MAILED

DEC 13 2004

OFFICE OF PETITIONS

In re Application of	:
Poling, Schmalix, Marazzi, Brayer,	: DECISION ACCORDING STATUS
Losey, Allen, Landers, and Ratliff	: UNDER 37 CFR 1.47(a)
Application No. 29/207,482	:
Filed: 15 June, 2004	:
Atty Docket No. DN2004095	:

This is in response to the renewed petition filed under 37 CFR 1.47(a) on 22 October, 2004.

The petition is **GRANTED**.

The above-identified application was filed on 15 June, 2004, without an executed oath or declaration. Accordingly, on 26 July, 2004, a Notice to File Missing Parts of Nonprovisional Application was mailed, requiring, *inter alia*, an executed oath or declaration and a surcharge for its late filing. The petition filed on 11 August, 2004, was dismissed on 10 September, 2004.

On 22 October, 2004, the present renewed petition was filed.Petitioners have shown that the non-signing inventor, Billy Joe Ratliff, Jr., has refused to join in the filing of the above-identified application after having been sent a copy of the application papers. Specifically, petitioners have shown that a copy of the above-identified application was sent to the non-signing inventor's last known address. However, the non-signing inventor failed to return an executed declaration naming him as a joint inventor along with David Charles Poling, Charles Kenneth Schmalix, Eric John Marazzi, Randall Raymond Brayer, Robert Allen Losey, Walter Dale Allen, and Samuel Patrick Landers.

The above-identified application and papers have been reviewed and found in compliance with 37 CFR 1.47(a). This application is hereby accorded Rule 1.47(a) status.

As provided in Rule 1.47(c), this Office will forward notice of this application's filing to the non-signing inventor at the address given in the declaration. Notice of the filing of this application will also be published in the Official Gazette.

The application is being forwarded to the Office of Initial Patent Examination for further processing.

Telephone inquiries related to this decision should be directed to the undersigned at 571-272-3231.

DWood

Douglas I. Wood
Senior Petitions Attorney
Office of Petitions

UNITED STATES PATENT AND TRADEMARK OFFICE

Commissioner for Patents
United States Patent and Trademark Office
P.O. Box 1450
Alexandria, VA 22313-1450
www.uspto.gov
DIW 12-04

Bill Ratliff
5130 Whitlow Court
Commerce Township, MI 48382

COPY MAILED

DEC 13 2004

OFFICE OF PETITIONS

In re Application of
Poling et al.
Application No. 29/207,482
Filed: 15 June, 2004
For: SHOULDER TREAD FOR A TIRE

Dear Mr. Ratliff:

You are named as a joint inventor in the above identified United States patent application, filed under the provisions of 35 U.S.C. 116 (United States Code), and 37 CFR 1.47(a), Rules of Practice in Patent Cases. Should a patent be granted on the application you will be designated therein as a joint inventor.

As a named inventor you are entitled to inspect any paper in the file wrapper of the application, order copies of all or any part thereof (at a prepaid cost per 37 CFR 1.19) or make your position of record in the application. Alternatively, you may arrange to do any of the preceding through a registered patent attorney or agent presenting written authorization from you. If you care to join the application, counsel of record (see below) would presumably assist you. Joining in the application would entail the filing of an appropriate oath or declaration by you pursuant to 37 CFR 1.63.

Telephone inquiries regarding this communication should be directed to the undersigned at 571/272-3231. Requests for information regarding your application should be directed to the File Information Unit at 703/308-2733. Information regarding how to pay for and order a copy of the application, or a specific paper in the application, should be directed to Certification Division at 703/308-9726 or 1-800-972-6382 (outside the Washington D.C. area).

D Wood

Douglas I. Wood
Senior Petitions Attorney
Office of Petitions

THE GOODYEAR TIRE & RUBBER COMPANY
D/823
1144 EAST MARKET STREET
AKRON OH 44316-0001

UNITED STATES PATENT AND TRADEMARK OFFICE

OFFICE

BORIS LESCHINSKY
P.O. BOX 72
WALDWICK NJ 07463

In re Application of ISKHAKOV, RAFIK Application No. 29/207,485 Filed: June 16, 2004 Attorney Docket No. **RI-1**	: : : : :	**DECISION ON PETITION**

This is a decision on the Petition To Withdraw Holding of Abandonment under 37 C.F.R. 1.18, received in the United States Patent & Trademark Office (USPTO) on March 26, 2007.

The petition is **DISMISSED**. Any request for reconsideration of this decision, or as explained below, filing a petition seeking revival under 37 CFR § 1.137, must be filed within TWO (2) MONTHS from the mail date of this decision.

The above-identified application was held abandoned for applicant's failure to timely file corrected formal drawings. The Petition To Withdraw Holding of Abandonment under 37 C.F.R. 1.18, received March 26, 2007 did not supply sufficient evidence that the drawings were submitted on time.

In light of the non-compliance with 37 CFR 1.25, the holding of abandonment cannot be withdrawn.

Applicant may seek relief by filing a petition for Revival of Abandoned Application under CFR § 1.137 (a) or (b). (Forms are available at USPTO website http://www.uspto.gov)

- Under 37 CFR 1.137(a), a petition for the revival of an ***unavoidable*** abandoned application
- Under 37 CFR 1.137(b), a petition for the revival of an ***unintentionally*** abandoned application

Application No. 29/207,485

Further inquires with respect to filing a petition under 37 CFR § 1.137 may be directed to the Office of Petitions at 571-272-3282 or addressed as follows:

By mail: Mail Stop Petitions
Commissioner for Patents
Office of Petitions
P O Box 1450
Alexandria, VA 22313-1450

Telephone inquires concerning this decision matter may be directed to the undersigned at 703 308-9250 Ext. 163.

Nina Motley

for Nina D. Motley
Quality Operations Assistant
Office of the Director
Office of Patent Publications

UNITED STATES PATENT AND TRADEMARK OFFICE

UNITED STATES DEPARTMENT OF COMMERCE
United States Patent and Trademark Office
Address: COMMISSIONER FOR PATENTS
P.O. Box 1450
Alexandria, Virginia 22313-1450
www.uspto.gov

APPL NO.	FILING OR 371 (c) DATE	ART UNIT	FIL FEE REC'D	ATTY.DOCKET NO	DRAWINGS	TOT CLMS	IND CLMS
29/207,530	06/15/2004	2911	340	83017	5	1	1

CONFIRMATION NO. 2591

CORRECTED FILING RECEIPT

OC000000013810433

22242
FITCH EVEN TABIN AND FLANNERY
120 SOUTH LA SALLE STREET
SUITE 1600
CHICAGO, IL 60603-3406

Date Mailed: 09/16/2004

Receipt is acknowledged of this regular Patent Application. It will be considered in its order and you will be notified as to the results of the examination. Be sure to provide the U.S. APPLICATION NUMBER, FILING DATE, NAME OF APPLICANT, and TITLE OF INVENTION when inquiring about this application. Fees transmitted by check or draft are subject to collection. Please verify the accuracy of the data presented on this receipt. **If an error is noted on this Filing Receipt, please write to the Office of Initial Patent Examination's Filing Receipt Corrections, facsimile number 703-746-9195. Please provide a copy of this Filing Receipt with the changes noted thereon. If you received a "Notice to File Missing Parts" for this application, please submit any corrections to this Filing Receipt with your reply to the Notice. When the USPTO processes the reply to the Notice, the USPTO will generate another Filing Receipt incorporating the requested corrections (if appropriate).**

Applicant(s)

Guillermo Haro, Skokie, IL;

Power of Attorney: The patent practitioners associated with Customer Number **22242**.

Domestic Priority data as claimed by applicant

This application is a DIV of 29/189,067 08/28/2003 PAT D,495,462

Foreign Applications

If Required, Foreign Filing License Granted: 07/23/2004

The number of your priority application, to be used for filing abroad under the Paris Convention is,
US29/207,530

Projected Publication Date: None, application is not eligible for pre-grant publication

Non-Publication Request: No

Early Publication Request: No

Title

Wand-shaped food product

Preliminary Class

D01

LICENSE FOR FOREIGN FILING UNDER
Title 35, United States Code, Section 184
Title 37, Code of Federal Regulations, 5.11 & 5.15

GRANTED

The applicant has been granted a license under 35 U.S.C. 184, if the phrase "IF REQUIRED, FOREIGN FILING LICENSE GRANTED" followed by a date appears on this form. Such licenses are issued in all applications where the conditions for issuance of a license have been met, regardless of whether or not a license may be required as set forth in 37 CFR 5.15. The scope and limitations of this license are set forth in 37 CFR 5.15(a) unless an earlier license has been issued under 37 CFR 5.15(b). The license is subject to revocation upon written notification. The date indicated is the effective date of the license, unless an earlier license of similar scope has been granted under 37 CFR 5.13 or 5.14.

This license is to be retained by the licensee and may be used at any time on or after the effective date thereof unless it is revoked. This license is automatically transferred to any related applications(s) filed under 37 CFR 1.53(d). This license is not retroactive.

The grant of a license does not in any way lessen the responsibility of a licensee for the security of the subject matter as imposed by any Government contract or the provisions of existing laws relating to espionage and the national security or the export of technical data. Licensees should apprise themselves of current regulations especially with respect to certain countries, of other agencies, particularly the Office of Defense Trade Controls, Department of State (with respect to Arms, Munitions and Implements of War (22 CFR 121-128)); the Office of Export Administration, Department of Commerce (15 CFR 370.10 (j)); the Office of Foreign Assets Control, Department of Treasury (31 CFR Parts 500+) and the Department of Energy.

NOT GRANTED

No license under 35 U.S.C. 184 has been granted at this time, if the phrase "IF REQUIRED, FOREIGN FILING LICENSE GRANTED" DOES NOT appear on this form. Applicant may still petition for a license under 37 CFR 5.12, if a license is desired before the expiration of 6 months from the filing date of the application. If 6 months has lapsed from the filing date of this application and the licensee has not received any indication of a secrecy order under 35 U.S.C. 181, the licensee may foreign file the application pursuant to 37 CFR 5.15(b).

UNITED STATES PATENT AND TRADEMARK OFFICE

COMMISSIONER FOR PATENTS
UNITED STATES PATENT AND TRADEMARK OFFICE
P.O. BOX 1450
ALEXANDRIA, VA 22313-1450
www.uspto.gov

JJGJr: 11-04

Paper No: __

MARTIN P. HOFFMAN
HOFFMAN WASSON & GITLER, P.C.
SUITE 522
2461 SOUTH CLARK STREET
ARLINGTON VA 22202

COPY MAILED

NOV 23 2004

OFFICE OF PETITIONS

In re Application of Cogoli, et al. Application No. 29/207,541 Filed: 16 June, 2004 Attorney Docket No. D-9129	: : : : :	DECISION ON PETITION

This is a decision on the petition under 37 C.F.R. §1.53 filed on 15 September, 2004, requesting that the above-identified application be accorded a filing date of 16 June, 2004.

The petition is **GRANTED** to the extent discussed herein.

BACKGROUND

The application was deposited on 16 June, 2004. The filing included, *inter alia*, a specification, three (3) sheets of drawings (Fig(s) 1 - 7), and a declaration.

On 27 July, 2004, the Office of Initial Patent Examination (OIPE) mailed a Notice of Incomplete Nonprovisional Application stating that the application had not been accorded a filing date because the specification did not include at least one claim in compliance with 35 U.S.C. § 112 and that the filing date would be the date of receipt of a claim in compliance therewith.

On 15 September, 2004, Petitioner filed the instant petition (with fee).

ANALYSIS

A review of the record reveals that no formal claim was included with the application papers deposited on 16 June, 2004. However, it is noted that the application papers deposited on 16

June, 2004, included a declaration stating that the inventors believe themselves to be

> " . . . an original, first and joint inventor . . . of the subject matter which is claimed and for which a patent is sought on the invention titled PEN WITH LID, the specification of which is attached hereto . . ."

A formal claim was not included with the application when it was deposited. However, since this is a design application, the above-quoted language in the declaration can be construed as the claimed required by 35 U.S.C. § 112 insofar as this design application is concerned. The form of a claim in a design application is fixed by rule and is accordingly different from the claims of other applications. Accordingly, since this is a design application, and since the claim language quoted above does appear at the conclusion, or end, of the specification, there is no statutory prohibition against construing this language as the statutorily required claim. It is also clear that there has been, and is, no doubt as to the form of, and what is to be claimed herein since this is a design application for which the form of the claim is set by 37 C.F.R. §1.153. Under the circumstances, it is appropriate that the language quoted above from the declaration be construed as the claim for purposes of according this application a filing date of 11 June, 2003.

Petitioner is reminded that errors such as occurred herein can result in loss of rights and care must be taken to avoid such.

The petition is **granted** to the extent that the language cited in the specification will be construed as a claim.

Petitioner may wish to file a preliminary amendment correcting the oversight and seek entry by the Examiner in due course.

The petition fee of $130.00 was paid and will not be refunded because the instant petition is not the result of an error by the Office.

The application file is released to the Office of Initial Patent Examination for further processing as necessary consistent with this decision with a filing date of 16 June, 2004.

Telephone inquiries concerning this matter may be directed to the undersigned at (571) 272-3214.

John J. Gillon, Jr.
Senior Attorney
Office of Petitions

UNITED STATES PATENT AND TRADEMARK OFFICE

Commissioner for Patents
United States Patent and Trademark Office
P.O. Box 1450
Alexandria, VA 22313-1450
www.uspto.gov

BAKER BOTTS L.L.P.
30 ROCKEFELLER PLAZA
44TH FLOOR
NEW YORK NY 10112-4498

COPY MAILED

SEP 2 6 2008

OFFICE OF PETITIONS

In re Patent No. D516298 :
Issue Date: March 7, 2006 :
Application No. 29/207,575 :
Filed: June 14, 2004 :
Attorney Docket No. A36206-072841.0240 :

NOTICE

This is a notice regarding your request for acceptance of a fee deficiency submission under 37 CFR 1.28. On September 1, 1998, the Court of Appeals for the Federal Circuit held that 37 CFR 1.28(c) is the sole provision governing the time for correction of the erroneous payment of the issue fee as a small entity. **See DH Technology v. Synergystex International, Inc. 154 F.3d 1333, 47 USPQ2d 1865 (Fed. Cir. Sept. 1, 1998).**

The Office no longer investigates or rejects original or reissue applications under 37 CFR 1.56. **1098 Off. Gaz. Pat. Office 502 (January 3, 1989)**. Therefore, nothing in this Notice is intended to imply that an investigation was done.

Your fee deficiency submission under 37 CFR 1.28 is hereby **ACCEPTED**.

This application is no longer entitled to small entity status. Accordingly, all future fees paid in this application must be paid at the large entity rate.

Inquiries related to this communication should be directed to the undersigned at (571) 272-3222.

Kenya A. McLaughlin
Petitions Attorney
Office of Petitions

UNITED STATES PATENT AND TRADEMARK OFFICE

COMMISSIONER FOR PATENTS
UNITED STATES PATENT AND TRADEMARK OFFICE
P.O. BOX 1450
ALEXANDRIA, VA 22313-1450
www.uspto.gov

COPY MAILED

JUN 12 2006

OFFICE OF PETITIONS

CHARLES E. BAXLEY, ESQUIRE
90 JOHN STREET
SUITE 309
NEW YORK, NY 10038

In re Application of	:
Chen	: DECISION ON PETITION
Application No. 29/207,703	:
Filed: June 18, 2004	:
Docket No.: CHEN3692/EM	:

This is a decision on the petition under 37 CFR 1.137(b), filed May 22, 2006, to revive the above-identified application.

The petition is **GRANTED**.

This application became abandoned March 8, 2006 for failure to timely submit a proper reply to the Notice of Allowability (Notice) mailed December 7, 2005. The Notice set a three month statutory period for reply. Notice of Abandonment was mailed May 4, 2006.

A grantable petition pursuant to 37 C.F.R. § 1.137(b) must be accompanied by: (1) the required reply to the outstanding Office action or notice, unless previously filed; (2) the petition fee as set forth in 37 C.F.R. § 1.17(m); (3) a statement that the entire delay in filing the required reply from the due date for the reply until the filing of a grantable petition pursuant to 37 C.F.R. § 1.137(b) was unintentional; and (4)any terminal disclaimer (and fee set forth in 37 C.F.R. § 1.20(d)) required pursuant to 37 C.F.R. § 1.137(c).

The instant petition has been reviewed and found in compliance with the provisions of 37 CFR 1.137(b). Accordingly, the failure to timely submit a proper reply to the Notice is accepted as having been unintentionally delayed.

The requested change in power of attorney has been entered into the record.

This application will be forwarded to the Office of Patent Publication for further processing.

Telephone inquiries concerning this matter may be directed to the undersigned at (571) 272-3205.

Alesia M. Brown
Petitions Attorney
Office of Petitions

UNITED STATES PATENT AND TRADEMARK OFFICE

UNITED STATES DEPARTMENT OF COMMERCE
United States Patent and Trademark Office
Address: COMMISSIONER FOR PATENTS
P.O. Box 1450
Alexandria, Virginia 22313-1450
www.uspto.gov

APPLICATION NUMBER	FILING OR 371 (c) DATE	FIRST NAMED APPLICANT	ATTY. DOCKET NO./TITLE
29/207,703	06/18/2004	John Chen	CHEN3692/EM

CONFIRMATION NO. 8203

OC000000019096745

23364
BACON & THOMAS, PLLC
625 SLATERS LANE
FOURTH FLOOR
ALEXANDRIA, VA 22314

Date Mailed: 06/05/2006

NOTICE REGARDING CHANGE OF POWER OF ATTORNEY

This is in response to the Power of Attorney filed 05/22/2006.

- The Power of Attorney to you in this application has been revoked by the applicant. Future correspondence will be mailed to the new address of record(37 CFR 1.33).

ALESIA M BROWN
OP (571) 272-3205

NEW ATTORNEY/AGENT COPY

UNITED STATES PATENT AND TRADEMARK OFFICE

UNITED STATES DEPARTMENT OF COMMERCE
United States Patent and Trademark Office
Address: COMMISSIONER FOR PATENTS
P.O. Box 1450
Alexandria, Virginia 22313-1450
www.uspto.gov

APPLICATION NUMBER	FILING OR 371 (c) DATE	FIRST NAMED APPLICANT	ATTY. DOCKET NO./TITLE
29/207,703	06/18/2004	John Chen	CHEN3692/EM

CONFIRMATION NO. 8203

OC000000019096745

23364
BACON & THOMAS, PLLC
625 SLATERS LANE
FOURTH FLOOR
ALEXANDRIA, VA 22314

Date Mailed: 06/05/2006

NOTICE REGARDING CHANGE OF POWER OF ATTORNEY

This is in response to the Power of Attorney filed 05/22/2006.

- The Power of Attorney to you in this application has been revoked by the applicant. Future correspondence will be mailed to the new address of record(37 CFR 1.33).

ALESIA M BROWN
OP (571) 272-3205

OFFICE COPY

UNITED STATES PATENT AND TRADEMARK OFFICE

Commissioner for Patents
United States Patent and Trademark Office
P.O. Box 1450
Alexandria, VA 22313-1450
www.uspto.gov

OMAIR M. FAROOQUI
DILLINGHAM & MURPHY, LLP
SIXTH FLOOR
225 BUSH STREET
SAN FRANCISCO, CA 94104

COPY MAILED

APR 25 2007

OFFICE OF PETITIONS

In re Application of :
Jones, Rodriguez :
Application No. 29/207,736 : ON PETITION
Filed: June 18, 2004 :
Title: DIGITAL INFORMATION CALENDAR :

This is a decision on the petition under 37 C.F.R. § 1.137(b), filed March 5, 2007, to revive the above-identified application.

The petition is **GRANTED.**

The petition satisfies the conditions for revival pursuant to the provisions of 37 CFR 1.137(b) in that (1) the reply in the form of a substitute Oath/Declaration; (2) the petition fee; (3) the required statement of unintentional delay have been received; and (4) a terminal disclaimer. Accordingly, the response has been accepted as having been unintentionally delayed.

The file does not indicate a change of address has been submitted, although the address given on the petition differs from the address of record. If appropriate, a request to change the address of record should be filed. A courtesy copy of this decision is being mailed to the address given on the petition; however, the Office will mail all future correspondence solely to the address of record.

This matter is being referred to the Publishing Division for processing into a patent.

Telephone inquiries regarding this decision should be directed to the undersigned at (571) 272-3206.

Liana Walsh
Petitions Examiner
Office of Petitions

Cc:

RODRIGUEZ JONES
32 GOULD STREET
SAN FRANCISCO, CA 94124

UNITED STATES PATENT AND TRADEMARK OFFICE

Commissioner for Patents
United States Patent and Trademark Office
P.O. Box 1450
Alexandria, VA 22313-1450
www.uspto.gov

J. JASON LINK
KILPATRICK STOCKTON LLP
1001 WEST FOURTH STREET
WINSTON-SALEM, NC 27101

COPY MAILED
JUN 05 2006
OFFICE OF PETITIONS

In re Application of	:
Jonathan Neil Davies et al	: DECISION ON PETITION
Application No. 29/207,757	: UNDER 37 CFR 1.137(b)
Filed: June 17, 2004	:
Attorney Docket No. 52172/300589	:

This is a decision on the petition under 37 CFR 1.137(b), filed February 28, 2006, to revive the above-identified application.

The petition is **dismissed**.

Any request for reconsideration of this decision must be submitted within TWO (2) MONTHS from the mail date of this decision. Extensions of time under 37 CFR 1.136(a) are permitted. The reconsideration request should include a cover letter entitled "Renewed Petition under 37 CFR 1.137(b)." This is **not** a final agency action within the meaning of 5 U.S.C. § 704.

This application became abandoned for failure to submit corrected drawings on or before September 15, 2005 as required by the Notice of Allowability mailed June 15, 2005. A Notice of Abandonment was mailed on January 30, 2006.

A grantable petition under 37 CFR 1.137(b) must be accompanied by: (1) the required reply, unless previously filed; (2) the petition fee as set forth in 37 CFR 1.17(m); (3) a statement that the entire delay in filing the required reply from the due date for the reply until the filing of a grantable petition pursuant to 37 CFR 1.137(b) was unintentional; and (4) any terminal disclaimer (and fee as set forth in 37 CFR 1.20(d)) required by 37 CFR 1.137(d). Where there is a question as to whether either the abandonment or the delay in filing a petition under 37 CFR 1.137 was unintentional, the Director may require additional information. See MPEP 711.03(c)(III)(C) and (D).

The instant petition lacks compliance with item (4). In this regard, the terminal disclaimer submitted with the petition fails

to provide the owner/assignee's name in the blank provided on the form or a clear indication of the owner/assignee's name. While it is noted that the apparent owner/assignee's name does appear in the caption for the terminal disclaimer, there is no clear indication on the form that this is in fact the owner/assignee in this case. The owner/assignee's name must be clearly indicated on the accompanying blank terminal disclaimer form. Accordingly, a completed terminal disclaimer form which clearly sets forth the owner/assignee's name must be submitted to revive this application.

The drawings submitted with the petition have been approved by the Official Draftsperson. Note the attached Notice of Draftsperson's Patent Drawing Review.

Further correspondence with respect to this matter should be addressed as follows:

By mail: Mail Stop PETITIONS
Commissioner for Patents
Post Office Box 1450
Alexandria, VA 22313-1450

By hand: Customer Service Window
Mail Stop Petitions
Randolph Building
401 Dulany Street
Alexandria, VA 22314

By fax: (571) 273-8300
ATTN: Office of Petitions

Any questions concerning this matter may be directed to the undersigned at (571) 272-3218.

Frances Hicks

Frances Hicks
Petitions Examiner
Office of Petitions

ATTACHMENTS: Blank Terminal Disclaimer Form
Notice of Draftsperson's Patent Drawing Review

PTO/SB/63 (09-04)
Approved for use through 07/31/2006. OMB 0651-0031
U.S. Patent and Trademark Office; U.S. DEPARTMENT OF COMMERCE
Under the Paperwork Reduction Act of 1995, no persons are required to a collection of information unless it displays a valid OMB control number.

TERMINAL DISCLAIMER TO ACCOMPANY PETITION	Docket Number (Optional)

In re Application of:

Name:

Application Number:

Filed:

For:

The owner*, _____ of _____ percent interest in the above-identified application hereby disclaims a terminal part of the term of any patent granted the above-identified application equivalent to: (1) if the above-identified application is a design application, the period of abandonment of the above-identified application, and (2) if the above-identified application is a utility or plant application, the lesser of: (a) the period of abandonment of the application; or (b) the period extending beyond twenty years from the date on which the above-identified application was filed in the United States or, if the application contains a specific reference to an earlier filed application(s) under 35 U.S.C. 120, 121, or 365(c), from the date on which the earliest such application was filed. This disclaimer also applies to any patent granted on a utility or plant application filed before June 8, 1995, or a design application, that contains a specific reference under 35 U.S.C. 120, 121, or 365(c) to the above-identified application. This disclaimer is binding upon the grantee, and its successors or assigns.

Check either box 1 or 2 below, if appropriate.

1. ☐ For submissions on behalf of an organization (e.g., corporation, partnership, university, government agency, etc.), the undersigned is empowered to act on behalf of the organization.

2. ☐ The undersigned is an attorney or agent of record. Registration Number_____.

_____	_____
Signature	Date
_____	_____
Typed or Printed Name	Telephone Number

☐ Terminal disclaimer fee under 37 CFR 1.20(d) included.

WARNING: Information on this form may become public. Credit card information should not be included on this form. Provide credit card information and authorization on PTO-2038.

* Statement under 37 CFR 3.73(b) is required if terminal disclaimer is signed by the assignee (owner). Form PTO/SB/96 may be used for making this certification. See MPEP § 324.

This collection of information is required by 37 CFR 1.137. The information is required to obtain or retain a benefit by the public which is to file (and by the USPTO to process) an application. Confidentiality is governed by 35 U.S.C. 122 and 37 CFR 1.11 and 1.14. This collection is estimated to take 12 minutes to complete, including gathering, preparing, and submitting the completed application form to the USPTO. Time will vary depending upon the individual case. Any comments on the amount of time you require to complete this form and/or suggestions for reducing this burden, should be sent to the Chief Information Officer, U.S. Patent and Trademark Office, U.S. Department of Commerce, P.O. Box 1450, Alexandria, VA 22313-1450. DO NOT SEND FEES OR COMPLETED FORMS TO THIS ADDRESS. **SEND TO: Commissioner for Patents, P.O. Box 1450, Alexandria, VA 22313-1450.**

If you need assistance in completing the form, call 1-800-PTO-9199 and select option 2.

UNITED STATES PATENT AND TRADEMARK OFFICE

Commissioner for Patents
United States Patent and Trademark Office
P.O. Box 1450
Alexandria, VA 22313-1450
www.uspto.gov

J. JASON LINK
KILPATRICK STOCKTON LLP
1001 WEST FOURTH STREET
WINSTON-SALEM, NC 27101

COPY MAILED

JUL 26 2006

OFFICE OF PETITIONS

In re Application of	:
Jonathan Neil Davies et al	: DECISION ON PETITION
Application No. 29/207,757	: UNDER 37 CFR 1.137(b)
Filed: June 17, 2004	:
Attorney Docket No. 52172/300589	:

This is a decision on the petition under 37 CFR 1.137(b), filed February 28, 2006, to revive the above-identified application.

The petition is **granted**.

This application became abandoned for failure to submit corrected drawings on or before September 15, 2005 as required by the Notice of Allowability mailed June 15, 2005. A Notice of Abandonment was mailed on January 30, 2006.

The petition satisfies the conditions for revival pursuant to the provisions of 37 CFR 1.137(b) in that (1) the reply in the form of drawings, which have been approved by the Official Draftsperson; (2) the $1,500 petition fee;(3) the required statement of unintentional delay; and (4) a terminal disclaimer as required by 37 CFR 1.137(d) have been received. Accordingly, the drawings, as required by the Notice of June 15, 2005, are accepted as having been unintentionally delayed.

The terminal disclaimer filed on June 16, 2006 has been accepted and made of record in the file.

Telephone inquiries concerning this decision should be directed to the undersigned at (571) 272-3218.

This matter is being referred to Publishing Division.

Frances Hicks
Petitions Examiner
Office of Petitions

UNITED STATES PATENT AND TRADEMARK OFFICE

Commissioner for Patents
United States Patent and Trademark Office
P.O. Box 1450
Alexandria, VA 22313-1450
www.uspto.gov

Ralph A. Dowell of DOWELL &
DOWELL P.C.
2111 Eisenhower Ave
Suite 406
Alexandria, VA 22314

COPY MAILED

JUL 25 2006

OFFICE OF PETITIONS

In re Application of

Peter Kellond

Application No. 29/207,766

Filed: June 18, 2004

Attorney Docket No. 14736DES

DECISION ON PETITION

This is a decision on the petition under 37 CFR 1.137(b), filed May 26, 2006, to revive the above-identified application.

The petition under 37 CFR 1.137(b) is **GRANTED**.

The above-cited application became abandoned for failure to reply in a timely manner to the Notice of Allowance and Issue Fee Due mailed January 11, 2006, which set a statutory period for reply of three (3) months from its mailing date. Accordingly, the application became abandoned on April 12, 2006.

The terminal disclaimer, filed May 26, 2006, is noted.

The issue fee payment is noted as being received on May 26, 2006.

The application is being forwarded to the Office of Patent Publications for further processing.

Telephone inquiries concerning this decision should be directed to the undersigned at (571) 272-3222.

Kenya A. McLaughlin
Petitions Attorney
Office of Petitions

OIPE
JUN 18 2004
PATENT & TRADEMARK OFFICE

PATENT

IN THE UNITED STATES PATENT AND TRADEMARK OFFICE

In re Application of:

Sean M. McDowell

Serial No.: To be assigned 29/207,770

Filed: To be assigned

For: SIDE ELEMENT OF A SHOE UPPER

Examiner: To be assigned Simone, D

Group Art Unit: 2900

Attorney Docket No.: 2465-6464US

NOTICE OF EXPRESS MAILING

Express Mail Mailing Label Number: EL 994831358 US

Date of Deposit with USPS: 18 JUNE, 2004

Person making Deposit: Laurence B. Bond

PETITION TO MAKE SPECIAL FOR NEW APPLICATION UNDER
M.P.E.P. SECTION 708.02 VIII

Mail Stop Design
Commissioner for Patents
P.O. Box 1450
Alexandria, VA 22313-1450

PETITION GRANTED

Richard Crispino
Richard Crispino
Special Program Examiner
TC 1700 FEB 23 2005

Sir:

PETITION:

Applicant hereby petitions to make this new application, which has not received an examination by the Examiner, special.

CLAIMS:

In applicant's view, all of the claims of this application are directed to a single invention. If the Office determines that the application is not obviously directed to a single invention, then the applicant will make an election without traverse as a prerequisite to the grant of special status.

07/02/2004 HTECKLU1 00000039 29207770
01 FC:1460 130.00 OP

UNITED STATES PATENT AND TRADEMARK OFFICE

Commissioner for Patents
United States Patent and Trademark Office
P.O. Box 1450
Alexandria, VA 22313-1450
www.uspto.gov

AUG 24 2004

TRASK BRITT
P.O. BOX 2550
SALT LAKE CITY UT 84110

In re Application of	:	
Matthew Najeeb Rask	:	
Serial No.: 29/207,785	:	DECISION ON PETITION
Filed: June 18, 2004	:	
For: Side Element of a Shoe Upper	:	

This is in response to the petition applicant filed on June 18, 2004, to make the above-identified application special under the provisions of 37 CFR 1.102(d).

Applicant has satisfied the provisions set forth in M.P.E.P. 708.02, VIII, thus the petition is **GRANTED**.

The application will be forwarded to the examiner for action on the merits commensurate with this decision.

Should there be any questions with regard to this letter please contact John Kittle by letter addressed to the Director, Technology Center 3700/2900, P.O. Box 1450 Alexandria, VA 22313-1450, or by telephone at (703) 308-0873 or by facsimile transmission at (703) 308-3139.

John E. Kittle

John E. Kittle
Director
Technology Center 3700/2900

UNITED STATES PATENT AND TRADEMARK OFFICE

Commissioner for Patents
United States Patent and Trademark Office
P.O. Box 1450
Alexandria, VA 22313-1450
www.uspto.gov

SEP 08 2004

BANNER & WITCOFF
1001 G STREET N W
SUITE 1100
WASHINGTON DC 20001

In re Application of	:	
Martin M. Lotti	:	
Serial No.: 29/207,795	:	DECISION ON PETITION
Filed: June 21, 2004	:	
For: Portion of a Shoe Upper	:	

This is in response to the petition applicant filed on July 27, 2004 to make the above-identified application special under the provisions of 37 CFR 1.102(d).

Applicant has satisfied the provisions set forth in M.P.E.P. 708.02, VIII, thus the petition is **GRANTED**.

The application will be forwarded to the examiner for action on the merits commensurate with this decision.

Should there be any questions with regard to this letter please contact John Kittle by letter addressed to the Director, Technology Center 3700/2900, P.O. Box 1450 Alexandria, VA 22313-1450, or by telephone at (703) 308-0873 or by facsimile transmission at (703) 308-3139.

John E. Kittle
Director
Technology Center 3700/2900

OIPE JUL 27 2004 PATENT & TRADEMARK OFFICE

IFW

DESIGN

IN THE UNITED STATES PATENT AND TRADEMARK OFFICE

In re Application of:	)	
Martin M. Lotti	)	
Serial No.: 29/207,796	)	Group Art Unit: 2900
Filed: June 21, 2004	)	Examiner: Unknown
For: **PORTION OF A SHOE UPPER**	)	Attorney Docket No.: 015127.00351

PETITION TO MAKE SPECIAL UNDER 37 C.F.R. §1.102(d)
AND INFORMATION DISCLOSURE STATEMENT

U.S. Patent and Trademark Office
220 20th Street S.
Customer Window
Crystal Plaza Two, Lobby, Room 1B03
Arlington, VA 22202

Dear Sir:

Applicant hereby petitions the Commissioner to make this application special under 37 C.F.R. §1.102(d) and under the guidelines of M.P.E.P. §708.02(VIII).

A pre-examination search was conducted at the U.S. Patent and Trademark Office by Tuan Nguyen, a registered patent agent and a professional searcher with PatPro, Suite 309A, Crystal Plaza One, 2001 Jefferson Davis Highway, Arlington, VA 22202. The search was conducted in the following classes and subclasses: D02/902, 907, 908, 943, 944, 946, 969, 971, 972, 973 and 974. Primary Examiner Dominic Simone of Group 2900 was consulted for the search at the U.S. Patent and Trademark Office. A search was also conducted at the law firm of Banner & Witcoff, Ltd., by Elizabeth Koch, a design assistant with the firm, through a collection of prior art patents pertaining to shoes assembled from various files of the assignee of the

01 FC:1460 130.00 DA

PETITION GRANTED

Richard Crispino
Special Program Examiner
TC 1700
MAR - 2 2005

UNITED STATES PATENT AND TRADEMARK OFFICE

Commissioner for Patents
United States Patent and Trademark Office
P.O. Box 1450
Alexandria, VA 22313-1450
www.uspto.gov
DIW 04-05

NEEDLE & ROSENBERG, P.C.
SUITE 1000
999 PEACHTREE STREET
ATLANTA GA 30309-3915

COPY MAILED

APR 0 4 2005

OFFICE OF PETITIONS

In re Application of	:
N. Chris Chaggares	: DECISION GRANTING
Application No. 29/207,817	: PETITION
Filed: 18 June, 2004	:
Atty Docket No. 22126.00012U1	:

This is a decision on the petition under 37 CFR 1.10(c), filed on 8 March, 2005, requesting that the above-identified application be accorded a filing date of 18 June, 2004, rather than the presently accorded filing date of 21 June, 2004.

Petitioner alleges that the application was deposited in Express Mail service on 18 June, 2004. In support, on 8 March, 2005, petitioner supplied a copy of Express Mail Label No. EL992018035US (the same Express Mail number found on the cover sheet located with the other application papers in the official file). Although the Express Mail label bears a "date-in" of "06-21-04" the label also contains an Official USPS postmark dated 18 June, 2004.

Since the correct Express Mail number was found on the cover page accompanying the application papers as filed, there is sufficient evidence to link the Express Mail number on petitioner's Express Mail label to the application papers deposited on 18 June, 2004. Petitioners are cautioned to ensure that the correct Express Mail number appears on all papers as filed.

In view of the above, the correct date of deposit in Express Mail is 18 June, 2004.

In view of the above, the petition is granted. No petition fee is due.

Application No. 29/207,817

The application is being referred to the Office of Initial Patent Examination for correction of the filing date to 18 June, 2004, and issuance of a corrected Filing Receipt.

Telephone inquiries specific to this matter should be directed to the undersigned at (571) 272-3231.

DWood

Douglas I. Wood
Senior Petitions Attorney
Office of Petitions

UNITED STATES PATENT AND TRADEMARK OFFICE

COMMISSIONER FOR PATENTS
UNITED STATES PATENT AND TRADEMARK OFFICE
P.O. BOX 1450
ALEXANDRIA, VA 22313-1450
www.uspto.gov

SHLESINGER, FITZSIMMONS & SHLESINGER
SUITE 1323
183 EAST MAIN STREET
ROCHESTER, NY 14604

COPY MAILED

AUG 2 2 2007

OFFICE OF PETITIONS

In re Application of
Hans-Joachim Naber
Application No. 29/207,824
Filed: June 21, 2004
Attorney Docket No. None

ON PETITION

This is a decision on the petition, filed April 6, 2007, under 37 CFR 1.137(b) to revive the above-identified application.

The petition is **GRANTED**.

The above-identified application became abandoned for failure to respond in a timely manner to the Notice of Allowance/Allowability mailed April 6, 2006. A Notice of Abandonment was mailed on August 9, 2006. In response, on April 6, 2007, the present petition was filed.

The petition satisfies the requirements of 37 CFR 1.137(b) in that petitioner has supplied (1) the reply in the form of substitute declaration and the requisite issue fee; (2) the petition fee of $750; (3) an adequate statement of unintentional delay and (4) a terminal disclaimer, including the $65fee as set forth in 37 CFR 1.20(d)).

The terminal disclaimer filed April 6, 2007 is accepted and has been made of record. Any continuing application filed from this application must contain a copy of the terminal disclaimer. The copy of the terminal disclaimer must be filed with a cover letter requesting the terminal disclaimer be recorded on the continuing application. A copy of this decision should be attached to the cover letter.

The application is being referred to the Office of Publications.

Telephone inquires related to this decision may be directed to the undersigned at (571) 272-3204. Status inquires related to processing at Publishing Division should be directed to (571) 272-4200.

Sherry D. Brinkley
Petitions Examiner
Office of Petitions

IN THE UNITED STATES PATENT AND TRADEMARK OFFICE

Applicant: Gordon Tang
Serial No.: 29/207,875
Filing Date: June 18, 2004
Title: SECUREMENT APPARATUS

Attorney Docket No.: TG114150

DECLARATION OF FACTS IN SUPPORT OF PETITION TO MAKE APPLICATION SPECIAL BECAUSE OF THE AGE OF INVENTOR

February 2, 2005

TO THE ASSISTANT COMMISSIONER FOR PATENTS:

I, Gordon Tang, hereby declare:

1. I reside at 13 Diamond "S" Ranch, Bellevue, Washington 98004.
2. I believe I am the original, first and sole inventor of the invention and subject matter claimed within the above-identified application.
3. I believe that my invention is patentable and that the claims of my application are in condition for allowance.
4. I was born on August 17, 1932 and am seventy-two (72) years old, which is more than 65 years of age. Attached hereto (Attachment 1) is a copy of my passport which attests to this fact. Please note that though I am a citizen of the United States of America, I am of Chinese descent and my Chinese name is listed on my passport. My English name, which I have used throughout my life, is Gordon Tang. For example, my name Gordon Tang is used on all documents related to my real estate purchases, ownership and real estate taxes.
5. I believe the expedited issuance of a patent for my invention will assist me in protecting my intellectual property rights.
6. I declare that all statements made herein of my own knowledge are true and that all statements made on information and belief are believed to be true; and further

PETITION GRANTED

Richard Crispino
Special Program Examiner
Technology Center 1700

MAY 5 1 2005

UNITED STATES PATENT AND TRADEMARK OFFICE

Commissioner for Patents
United States Patent and Trademark Office
P.O. Box 1450
Alexandria, VA 22313-1450
www.uspto.gov

Robert M. Storwick
PO Box 386
Mercer Island WA 98040

COPY MAILED

JUN 19 2007

OFFICE OF PETITIONS

In re Application of
Tang
Application No. 29/207,875
Filed: June 18, 2004
Attorney Docket No. TG 114150

DECISION ON PETITION

This is a decision on the petition under the unintentional provisions of 37 CFR 1.137(b), filed December 6, 2006 (certificate of mailing date November 30, 2006), to revive the above-identified application. The petition will be treated as a petition to withdraw the holding of abandonment under 37 CFR 1.181.

The petition under 37 CFR 1.181 is **GRANTED**.

The petition under 37 CFR 1.137(b) is **DISMISSED AS MOOT**.

This application was held abandoned for failure to respond in a timely manner to the Notice of Allowance and Fee(s) Due, mailed on June 15, 2005, which set forth a non-extendable 3 month period to submit a $400.00 issue fee. The Office contended this application became abandoned on September 16, 2005 for failure to reply to the June 15, 2005 Notice. A Notice of Abandonment was mailed on December 12, 2005.

In the petition under 37 CFR 1.137(b), petitioner asserts that he mailed an Issue Fee transmittal and authorization to charge the $400.00 issue fee to the Office on September 8, 2005. The original response is not of record in the file and cannot be located. However, the copy of the Issue Fee transmittal submitted with the instant petition contains a proper certificate of mailing bearing a September 8, 2005 date of deposit.

Under 37 C.F.R. § 1.8(a)(1) correspondence is considered timely if: (1) the correspondence is mailed or transmitted prior to expiration of the set period for response by being properly addressed to the Patent and Trademark Office as set out in 37 C.F.R. § 1.1(a) and deposited with the U.S. Postal Service with sufficient postage as first class mail or transmitted to the Patent and Trademark Office in accordance with 37 C.F.R. § 1.6(d); and (2) the correspondence includes a certificate for each piece of correspondence stating the date of deposit or transmission. The

person signing the certificate should have a reasonable basis to expect that the correspondence would be mailed or transmitted on or before the date indicated.

The Issue Fee transmittal bears a proper certificate of mailing, dated September 8, 2005, in compliance with the requirements of 37 C.F.R. § 1.8(a)(1) as set forth above. In addition, the person signing the certificate, Registered Practitioner Robert M. Storwick, had reasonable basis to expect that the correspondence would be mailed on September 8, 2005. It is noted that Mr. Storwick filed the instant petition and asserts that he filed the Issue Fee transmittal and the issue fee on September 8, 2005.

The petition under 37 CFR 1.181 is **GRANTED**, the holding of abandonment is withdrawn, and the December 12, 2005 Notice of Abandonment is **vacated**.

The petition under 37 CFR 1.137(b) is **dismissed as moot**. The $750.00 petition fee and the $65.00 terminal disclaimer fee will be refunded via a treasury check that will be scheduled shortly.

The application file will be forwarded to Publications Division for processing into a patent.

Telephone inquiries concerning this decision should be directed to the undersigned at (571) 272-3230.

This application is being referred to Publishing Division for processing into a patent.

Shirene Willis Brantley

Shirene Willis Brantley
Senior Petitions Attorney
Office of Petitions

UNITED STATES PATENT AND TRADEMARK OFFICE

Commissioner for Patents
United States Patent and Trademark Office
P.O. Box 1450
Alexandria, VA 22313-1450
www.uspto.gov

JUN 25 2004

Marshall A. Lerner, Esq.
Kleinberg & Lerner, LLP
Suite 1080
2049 Century Park East
Los Angeles CA 90067

In re Application of	:	
Savva Teteriatnikov	:	
Serial No.: 29/207,886	:	**REQUEST FOR EXPEDITED EXAMINATION**
Filed: June 18, 2004	:	
For: Shoe Upper	:	

This is in response to the Request for expedited examination applicant filed June 18, 2004 to expedite the above-identified application under the provisions of 37 CFR 1.155.

Applicant has satisfied the provisions set forth in 37 CFR 1.155, thus the petition is **GRANTED**.

The application will be forwarded to the examiner for action on the merits commensurate with this decision.

Should there be any questions with regard to this letter please contact John Kittle by letter addressed to the Director, Technology Center 3700/2900, P.O. Box 1450 Alexandria, VA 22313-1450 or by telephone at (703)308-0873 or by facsimile transmission at (703)308-3139.

John E. Kittle

John E. Kittle
Director
Technology Center 3700/2900

UNITED STATES PATENT AND TRADEMARK OFFICE

Commissioner for Patents
United States Patent and Trademark Office
P.O. Box 1450
Alexandria, VA 22313-1450
www.uspto.gov

OCT 19 2004

BANNER & WITCOFF, LTD
ELEVENTH FLOOR
1001 G STREET, N.W.
WASHINGTON, D.C. 20001-4597

In re Application of	:	
Sean McDowell	:	
Serial No.: 29/207,906	:	DECISION ON PETITION
Filed: June 22, 2004	:	
For: Portion of a Shoe Upper	:	

This is in response to the petition applicant filed on August 17, 2004 to make the above-identified application special under the provisions of 37 CFR 1.102(d).

Applicant has satisfied the provisions set forth in M.P.E.P. 708.02, VIII, thus the petition is **GRANTED**.

The application will be forwarded to the examiner for action on the merits commensurate with this decision.

Should there be any questions with regard to this letter please contact John Kittle by letter addressed to the Director, Technology Center 3700/2900, P.O. Box 1450 Alexandria, VA 22313-1450, or by telephone at (703) 308-0873 or by facsimile transmission at (703) 308-3139.

John E. Kittle
Director
Technology Center 3700/2900

UNITED STATES PATENT AND TRADEMARK OFFICE

Commissioner for Patents
United States Patent and Trademark Office
P.O. Box 1450
Alexandria, VA 22313-1450
www.uspto.gov

SEP 28 2004

BANNER & WITCOFF
1001 G STREET N W
SUITE 1100
WASHINGTON DC 20001

In re Application of	:	
Sean McDowell	:	
Serial No.: 29/207,907	:	DECISION ON PETITION
Filed: June 22, 2004	:	
For: Portion Of A Shoe Upper	:	

This is in response to the petition applicant filed on August 17, 2004 to make the above-identified application special under the provisions of 37 CFR 1.102(d).

Applicant has satisfied the provisions set forth in M.P.E.P. 708.02, VIII, thus the petition is **GRANTED**.

The application will be forwarded to the examiner for action on the merits commensurate with this decision.

Should there be any questions with regard to this letter please contact John Kittle by letter addressed to the Director, Technology Center 3700/2900, P.O. Box 1450 Alexandria, VA 22313-1450, or by telephone at (703) 308-0873 or by facsimile transmission at (703) 308-3139.

John E. Kittle

John E. Kittle
Director
Technology Center 3700/2900

Perk

OIPE JC25 JAN 0 4 2005 PATENT & TRADEMARK OFFICE

FILE COPY
DESIGN

IN THE UNITED STATES PATENT AND TRADEMARK OFFICE

In re Application of:	)	
Steven W. Fisher et al.	)	
Serial No.: 29/207,921	)	Group Art Unit: ~~2913~~ 2911
Filed: June 22, 2004	)	Examiner: TBA
For: **MOUSE RECEIVER WITH INTEGRATED FINGERPRINT SCANNING DEVICE**	)	Attorney Docket No.: 013797.00442

PETITION TO MAKE SPECIAL UNDER 37 C.F.R. §1.102(d)
AND INFORMATION DISCLOSURE STATEMENT

PETITION GRANTED

William Krynski
Special Program Examiner
TC 1700
FEB 18 2005

Mail Stop Design
Commissioner for Patents
P. O. Box 1450
Alexandria, VA 22313-1450

Dear Sir:

Applicant hereby petitions the Commissioner to make this application special under 37 C.F.R. §1.102(d) and under the guidelines of M.P.E.P. §708.02(VIII).

A pre-examination search was conducted at the U.S. Patent and Trademark Office by Mr. Tuan Nguyen, a registered patent agent and a professional searcher with PatPro, Suite 309A, Crystal Plaza One, 2001 Jefferson Davis Highway, Arlington, VA 22202. The search was conducted in class D10 in the following subclasses: 104, 121; in class D14 in the following subclasses: 383, 384, 387, 402, 405, 406, 407, 408, 409, 410, 412, 426, 427, 432 and 454; in class 340 in the following subclasses: 5.53; in class 345 in the following subclasses: 163, 170; in class 382 in the following subclasses: 124, 126. Primary Examiner Freda Nunn of Group 2900 was consulted for the searches at the U.S. Patent and Trademark Office.

01/05/2005 JBALINAN 00000092 190733 29207921
01 FC:1464 130.00 DA

UNITED STATES PATENT AND TRADEMARK OFFICE

Commissioner for Patents
United States Patent and Trademark Office
P.O. Box 1450
Alexandria, VA 22313-1450
www.uspto.gov

SEP 17 2004

BANNER & WITCOFF
1001 G STREET N W
SUITE 1100
WASHINGTON DC 20001

In re Application of	:	
E. Scott Morris	:	
Serial No.: 29/207,922	:	DECISION ON PETITION
Filed: June 22, 2004	:	
For: Portion of a Shoe Upper	:	

This is in response to the petition applicant filed on August 14, 2004 to make the above-identified application special under the provisions of 37 CFR 1.102(d).

Applicant has satisfied the provisions set forth in M.P.E.P. 708.02, VIII, thus the petition is **GRANTED**.

The application will be forwarded to the examiner for action on the merits commensurate with this decision.

Should there be any questions with regard to this letter please contact John Kittle by letter addressed to the Director, Technology Center 3700/2900, P.O. Box 1450 Alexandria, VA 22313-1450, or by telephone at (703) 308-0873 or by facsimile transmission at (703) 308-3139.

John E. Kittle

John E. Kittle
Director
Technology Center 3700/2900

UNITED STATES PATENT AND TRADEMARK OFFICE

Commissioner for Patents
United States Patent and Trademark Office
P.O. Box 1450
Alexandria, VA 22313-1450
www.uspto.gov

LEONG C. LEI
PMB #1008
1867 YGNACIO VALLEY RD.
WALNUT CREEK CA 94598

COPY MAILED

NOV 04 2005

OFFICE OF PETITIONS

In re Application of :
Kuan-Chih Lin :
Application No. 29/207,931 : ON PETITION
Filed: June 22, 2004 :
Attorney Docket No.: FP10277 :

This is a decision on the petition filed August 10, 2005 under 37 CFR 1.137(b),[1] to revive the above-identified application.

The petition under 37 CFR 1.137 (b) is **DISMISSED**.

Any further petition to revive the above-identified application must be submitted within TWO (2) MONTHS from the mail date of this decision. Extensions of time under 37 CFR 1.136(b) are permitted. The reconsideration request should include a cover letter entitled "Petition under 37 CFR 1.137." This is **not** final agency action within the meaning of 5 U.S.C. § 704.

This application became abandoned July 20, 2005 for failure to timely pay the issue fee on or before July 19, 2005. The instant petition and this decision precede the mailing of the Notice of Abandonment.

The petition does not satisfy requirement (4) of the regulation.

---

[1] Effective December 1, 1997, the provisions of 37 CFR 1.137(b) now provide that where the delay in reply was unintentional, a petition may be filed to revive an abandoned application or a lapsed patent pursuant to 37 CFR 1.137(b). A grantable petition filed under the provisions of 37 CFR 1.137(b) must be accompanied by:

(1) the required reply, unless previously filed. In a nonprovisional application abandoned for failure to prosecute, the required reply may be met by the filing of a continuing application. In a nonprovisional application filed on or after June 8, 1995, and abandoned for failure to prosecute, the required reply may also be met by the filing of a request for continued examination in compliance with § 1.114. In an application or patent, abandoned or lapsed for failure to pay the issue fee or any portion thereof, the required reply must be the payment of the issue fee or any outstanding balance thereof.

(2) the petition fee as set forth in 37 CFR 1.17(m);

(3) a statement that the entire delay in filing the required reply from the due date for the reply until the filing of a grantable petition pursuant to 37 CFR 1.137(b) was unintentional. The Commissioner may required additional information where there is a question whether the delay was unintentional; and

(4) any terminal disclaimer (and fee as set forth in 37 CFR 1.20(d)) required pursuant to 37 CFR 1.137(c)).

Petitioner must submit a Terminal Disclaimer with any renewed petition since this is a design application. **Petitioner should note that submission of any renewed petition without the required reply will be construed as intentional delay.**

Further correspondence with respect to this matter should be addressed as follows:

By mail: Mail Stop Petitions
Commissioner for Patents
P.O. Box 1450
Alexandria VA 22313-1450

By FAX: (571) 273-8300
ATTN: Office of Petitions

Telephone inquiries concerning this matter may be directed to the undersigned Petitions Attorney at (571) 272-3212.

Patricia Faison-Ball

Patricia Faison-Ball
Senior Petitions Attorney
Office of Petitions

UNITED STATES PATENT AND TRADEMARK OFFICE

Commissioner for Patents
United States Patent and Trademark Office
P.O. Box 1450
Alexandria, VA 22313-1450
www.uspto.gov

LEONG C. LEI
PMB #1008
1867 YGNACIO VALLEY RD.
WALNUT CREEK CA 94598

COPY MAILED

DEC 0 8 2005

OFFICE OF PETITIONS

In re Application of
Kuan-Chih Lin
Application No. 29/207,931
Filed: June 22, 2004
Attorney Docket No.: FP10277

ON PETITION

This is a decision on the petition filed August 10, 2005 under 37 CFR 1.137(b),[1] to revive the above-identified application.

The petition under 37 CFR 1.137 (b) is **GRANTED**.

This application became abandoned July 20, 2005 for failure to timely pay the issue fee on or before July 19, 2005. Preceding the mailing of the Notice of Abandonment, a petition to revive was filed August 10, 2005 authorizing the payment of the issue fee and petition fee but was dismissed in a decision mailed November 4, 2005 because the petition was not accompanied by a terminal disclaimer.

All other requirements of 37 CFR 1.137(b), including the filing of a terminal disclaimer, having now been met, this matter is being referred to the Publishing Division.

Telephone inquiries concerning this matter may be directed to the undersigned Petitions Attorney at (571) 272-3212.

Patricia Faison-Ball

Patricia Faison-Ball
Senior Petitions Attorney
Office of Petitions

---

[1] Effective December 1, 1997, the provisions of 37 CFR 1.137(b) now provide that where the delay in reply was unintentional, a petition may be filed to revive an abandoned application or a lapsed patent pursuant to 37 CFR 1.137(b). A grantable petition filed under the provisions of 37 CFR 1.137(b) must be accompanied by:

(1) the required reply, unless previously filed. In a nonprovisional application abandoned for failure to prosecute, the required reply may be met by the filing of a continuing application. In a nonprovisional application filed on or after June 8, 1995, and abandoned for failure to prosecute, the required reply may also be met by the filing of a request for continued examination in compliance with § 1.114. In an application or patent, abandoned or lapsed for failure to pay the issue fee or any portion thereof, the required reply must be the payment of the issue fee or any outstanding balance thereof.

(2) the petition fee as set forth in 37 CFR 1.17(m);

(3) a statement that the entire delay in filing the required reply from the due date for the reply until the filing of a grantable petition pursuant to 37 CFR 1.137(b) was unintentional. The Commissioner may required additional information where there is a question whether the delay was unintentional; and

(4) any terminal disclaimer (and fee as set forth in 37 CFR 1.20(d)) required pursuant to 37 CFR 1.137(c)).

JAN 1 9 2005
PATENT & TRADEMARK OFFICE

FILE COPY

DESIGN

IN THE UNITED STATES PATENT AND TRADEMARK OFFICE

In re Application of:	)	
Jim Wasco et al.	)	
Application No.: 29/207,934	)	Group Art Unit: 2915
Filed: June 22, 2004	)	Examiner: C. Rademaker
For: **TYPE FONT**	)	Attorney Docket No.: 013797.00308

PETITION TO MAKE SPECIAL UNDER 37 C.F.R. §1.102(d)
AND INFORMATION DISCLOSURE STATEMENT

PETITION GRANTED

William Krynski
Special Program Examiner
TC 1700
2-10-05

Mail Stop Design
Commission for Patents
P. O. Box 1450
Alexandria, VA 22313-1450

Dear Sir:

Applicants hereby petition the Commissioner to make this application special under 37 C.F.R. §1.102(d) and under the guidelines of M.P.E.P. §708.02(VIII).

A pre-examination search was conducted at the U.S. Patent and Trademark Office by Mr. Tuan Nguyen, a professional searcher with PatPro, Suite 404, 2111 Eisenhower Avenue, Alexandria, VA 22314. The search was conducted in the following classes and subclasses: D18/24, 25, 26, 27, 28, 29, 30, 31, 32, and 33 and 101/398 and 399. The patents and documents listed on the attached PTO-1449 (1 sheet) were found in the pre-examination search as described above. Examiner Charles Rademaker was consulted regarding this search. In accordance with the U. S. Patent and Trademark Office rules, we have not enclosed copies of the cited U. S. patents.

The subject matter of the instant application relates to a type font. Applicants submit that the type font claimed in the present application patentably distinguishes over the references because the claimed design is not anticipated by any of the attached references. The claimed design is also not obvious because, at a minimum, none of the references are basically the same as the claimed design. Accordingly, the appearance differences between the type font illustrated

01/24/2005 EABUBAK1 00000138 190733 29207934
01 FC:1464 130.00 DA

UNITED STATES PATENT AND TRADEMARK OFFICE

Commissioner for Patents
United States Patent and Trademark Office
P.O. Box 1450
Alexandria, VA 22313-1450
www.uspto.gov

ALIX YALE & RISTAS LLP
750 MAIN STREET
SUITE 1400
HARTFORD, CT 06103

COPY MAILED

MAR 09 2006

OFFICE OF PETITIONS

In re Application of	:
Raymond Chan	:
Application No. 29/207,963	: DECISION GRANTING PETITION
Filed: June 22, 2004	: UNDER 37 CFR 1.137(b)
Attorney Docket No. MCHK/179DES/US	:

This is a decision on the petition under 37 CFR 1.137(b), filed December 21, 2005, to revive the above-identified application.

The petition is **GRANTED**.

This application became abandoned for failure to timely pay the issue fee on or before September 28, 2005, as required by the Notice of Allowance and Fee(s) Due, mailed June 28, 2005. Accordingly, the date of abandonment of this application is September 29, 2005.

The petition satisfies the conditions for revival pursuant to the provisions of 37 CFR 1.137(b) in that (1) the issue fee of $800; (2) the petition fee of $1,500; (3) the required statement of unintentional delay; and (4) a terminal disclaimer and fee of $130 as required by 37 CFR 1.137(d) have been received. Accordingly, the issue fee is accepted as having been unintentionally delayed. Additionally, the terminal disclaimer is accepted and has been made of record in the application file.

Telephone inquiries concerning this decision should be directed to the undersigned at (571) 272-3218.

This application is being referred to Publishing Division for processing into a patent.

Frances Hicks
Petitions Examiner
Office of Petitions

OIPE JC91
JAN 0 4 2005

FILE COPY

DESIGN

IN THE UNITED STATES PATENT AND TRADEMARK OFFICE

In re Application of:	)	
Seiya Ohta	)	
Serial No.: 29/208,012	)	Group Art Unit: ~~2913~~ 2911
Filed: June 24, 2004	)	Examiner: TBA Nunn, F
For: **REGION OF A FINGERPRINT SCANNING DEVICE WITH AN ILLUMINATED RING**	)	Attorney Docket No.: 013797.00451

PETITION TO MAKE SPECIAL UNDER 37 C.F.R. §1.102(d)
AND INFORMATION DISCLOSURE STATEMENT

PETITION GRANTED

William Krynski
Special Program Examiner
TC 1700
2-10-05

Mail Stop Design
Commissioner for Patents
P. O. Box 1450
Alexandria, VA 22313-1450

Dear Sir:

Applicant hereby petitions the Commissioner to make this application special under 37 C.F.R. §1.102(d) and under the guidelines of M.P.E.P. §708.02(VIII).

A pre-examination search was conducted at the U.S. Patent and Trademark Office by Mr. Tuan Nguyen, a registered patent agent and a professional searcher with PatPro, Suite 309A, Crystal Plaza One, 2001 Jefferson Davis Highway, Arlington, VA 22202. The search was conducted in class D10 in the following subclasses: 104, 121; in class D14 in the following subclasses: 383, 384, 387, 402, 405, 406, 407, 408, 409, 410, 412, 426, 427, 432 and 454; in class 340 in the following subclasses: 5.53; in class 345 in the following subclasses: 163, 170; in class 382 in the following subclasses: 124, 126. Primary Examiner Freda Nunn of Group 2900 was consulted for the searches at the U.S. Patent and Trademark Office.

01/05/2005 JBALINAN 00000095 190733 29208012
01 FC:1464 130.00 DA

UNITED STATES PATENT AND TRADEMARK OFFICE

Commissioner for Patents
United States Patent and Trademark Office
P.O. Box 1450
Alexandria, VA 22313-1450
www.uspto.gov

AUG 06 2004

Richard C. Litman
LITMAN LAW OFFICES, LTD.
P.O. Box 15035
Arlington VA 22215

In re Application of	:	
Emma Broussard et al	:	DECISION ON PETITION
Serial No.: 29/208,014	:	
Filed: June 24, 2004	:	
For: Organizer Tray	:	

This is in response to applicants' petition filed June 24, 2004, to make the above-identified application special under the provisions of 37 CFR 1.102(c), based on the age of the applicant.

Applicant has satisfied the provisions set forth in M.P.E.P. 708.02, IV. Therefore the petition is **GRANTED**.

The application will be forwarded to the examiner for action on the merits commensurate with this decision.

Should there be any questions with regard to this letter please contact John Kittle by letter, addressed to the Director, Technology Center 3700/2900, P.O. Box 1450 Alexandria, VA 22313-1450 Washington, DC 20231, or by telephone at (703) 308-0873 or by facsimile transmission at (703) 308-3139.

John E. Kittle

John E. Kittle
Director,
Technology Center 3700/2900

UNITED STATES PATENT AND TRADEMARK OFFICE

COMMISSIONER FOR PATENTS
UNITED STATES PATENT AND TRADEMARK OFFICE
P.O. BOX 1450
ALEXANDRIA, VA 22313-1450
www.uspto.gov

JJGJr. 01-05

Paper No: __

ALLEMAN HALL MCCOY
RUSSELL & TUTTLE LLP
806 SW BROADWAY/STE. 600
PORTLAND, OR 97205-3335

COPY MAILED

FEB 02 2005

OFFICE OF PETITIONS

In re Application of	:	
Salvatori, et al.	:	
Application No. 29/208,037	:	DECISION ON PETITION
Filed: 22 June, 2004 (Deposit Date)	:	
Attorney Docket No. IFC 309C	:	

This is a decision on the petition filed on 5 November, 2004, requesting that the instant application be accorded a filing date of 22 June, 2004, and considered under 37 C.F.R. §1.53.

The petition is **DISMISSED**.

NOTE: The Revocation/Power of Attorney filed on 19 January, 2005, hereby is acknowledged.

See discussion at pages 5 - 6, *infra*.

A review of the application file reveals that:

- the instant application was deposited on 22 June, 2004, as a design patent application, but without an express statement "I/we claim . . . " set forth in the one- (1-) page transmittal, and/or in the one- (1-) page specification; and

- though Petitioner alleges that two pages of specification were deposited (along with another two for the declaration), there appears to be only a single page of specification that commences: "Applicants PHILLIP H. SALVATORI . . ." and concludes " . . . of the embodiment of Fig. 1."

- the Office mailed a Notice of Incomplete Nonprovisional Application (Filing Date Not Granted) on 14 October, 2004, indicating that:

  --Petitioner had failed to include at least one (1) claim as prescribed by 5 U.S.C. §112[1] and had failed to include an oath/declaration upon filing; and

  --Petitioner must submit within two (2) months either a petition evidencing the submission of the "omitted item" (the claim) upon original deposit, or the "omitted item" (the claim) with a newly executed oath/declaration with which the application would receive a filing date contemporaneous with that new submission;

  --otherwise proceedings would be terminated.

Petitioner submitted the instant petition on 5 November, 2004, with, *inter alia*, copies of a receipt card (see: MPEP §503[2]), a two- (2-) page specification and a two- (2-) page

---

[1] The statute at 5 U.S.C. 112 provides:

35 U.S.C. 112 Specification.

The specification shall contain a written description of the invention, and of the manner and process of making and using it, in such full, clear, concise, and exact terms as to enable any person skilled in the art to which it pertains, or with which it is most nearly connected, to make and use the same, and shall set forth the best mode contemplated by the inventor of carrying out his invention.

The specification shall conclude with one or more claims particularly pointing out and distinctly claiming the subject matter which the applicant regards as his invention.

A claim may be written in independent or, if the nature of the case admits, in dependent or multiple dependent form.

Subject to the following paragraph, a claim in dependent form shall contain a reference to a claim previously set forth and then specify a further limitation of the subject matter claimed. A claim in dependent form shall be construed to incorporate by reference all the limitations of the claim to which it refers.

A claim in multiple dependent form shall contain a reference, in the alternative only, to more than one claim previously set forth and then specify a further limitation of the subject matter claimed. A multiple dependent claim shall not serve as a basis for any other multiple dependent claim. A multiple dependent claim shall be construed to incorporate by reference all the limitations of the particular claim in relation to which it is being considered.

An element in a claim for a combination may be expressed as a means or step for performing a specified function without the recital of structure, material, or acts in support thereof, and such claim shall be construed to cover the corresponding structure, material, or acts described in the specification and equivalents thereof.

(Amended July 24, 1965, Public Law 89-83, sec. 9, 79 Stat. 261; Nov.14, 1975, Public Law 94-131, sec.7, 89 Stat. 691.)

[2] MPEP §503 provides in pertinent part:

§503 Application Number and Filing Receipt

* * *

A return postcard should be attached to *each* patent application for which a receipt is desired. It is important that the return postcard itemize all of the components of the application. If the postcard does not itemize each of the components of the application, it will not serve as evidence that any component which was not itemized was received by the United States Patent and Trademark Office (USPTO). It should be recognized that the identification of an application by application number does not necessarily signify that the USPTO has accepted the application as complete (37 C.F.R. §1.53(a)).

* * *

RETURN POSTCARD

If a receipt of any item (e.g., paper or fee) filed in the USPTO is desired, it may be obtained by enclosing with the paper a self-addressed postcard specifically identifying the item. The USPTO will stamp the receipt date on the postcard and place it in the outgoing mail. A postcard receipt which itemizes and properly identifies the items which are being filed serves as *prima facie* evidence of receipt in the USPTO of all the items listed thereon on the date stamped thereon by the USPTO.

The identifying data on the postcard should be so complete as to clearly identify the item for which receipt is requested. For example, the postcard should identify the applicant's name, application number (if known), confirmation number (if known), filing date, interference number,

oath/declaration.

However, Petitioner's receipt card does not appear to set forth the number of pages of specification (or the number of pages of the oath/declaration), but only the number of sheets of drawings, and therefore cannot be used to demonstrate receipt by the Office of what Petitioner alleges to have been page 2 of the specification and or multiple pages of the oath/declaration (alleged to have been pages 3 and 4 of the specification as filed).

While Petitioner does not address the matter in the petition, it is noted that the single page of specification deposited does allege that the instant application is a "divisional of U.S. Design Patent Application 29/171,985, which is incorporated herein by reference in its entirety for all purposes."

In this regard, see (below) the discussion of the commentary at MPEP §201.06(c).

STATUTES, REGULATIONS AND ANALYSIS

Congress has:

- specified the basis for design applications at 5 U.S.C. §171;[3] and
- provided therein that the statutory structure of "patents for inventions [i.e., patents issued

---

title of the invention, etc. The postcard should also identify the type of paper being filed, e.g., new application, affidavit, amendment, notice of appeal, appeal brief, drawings, fees, motions, supplemental oath or declaration, petition, etc., and the number of pages being submitted. If a new application is being filed, all parts of the application being submitted should be separately listed on the postcard, e.g., the number of pages of specification (including written description, claims and abstract), number of claims, number of sheets of drawings, number of pages of oath/declaration, number of pages of cover sheet (provisional application).

The postcard receipt will not serve as *prima facie* evidence of receipt of any item which is not adequately itemized on the postcard. For example, merely listing on the postcard "a complete application" or "patent application" will not serve as a proper receipt for each of the required components of an application (e.g., specification (including claims), drawings (if necessary), oath or declaration and the application filing fee) or missing portions (e.g., pages, sheets of drawings) of an application if one of the components or portion of a component is found to be missing by the USPTO. Each separate component should be specifically and properly itemized on the postcard. Furthermore, merely incorporating by reference in the postcard receipt, the items listed in a transmittal letter will not serve as *prima facie* evidence of receipt of those items.

The person receiving the item(s) in the USPTO will check the listing on the postcard against the item(s) being filed to be sure they are properly identified and that all the items listed on the postcard are presently being submitted to the USPTO. If any of the items listed on the postcard are not being submitted to the USPTO, those items will be crossed off and the post-card initialed by the person receiving the items. Upon return of a postcard receipt from the USPTO, the postcard receipt should be promptly reviewed by the person who filed the items to ensure that every item specifically denoted on the postcard was received by the USPTO. If the postcard receipt has been annotated to indicate that a particular item denoted on the postcard was not received by the USPTO, the postcard receipt will not serve as *prima facie* evidence of receipt of that item in the USPTO. (Emphasis supplied.)

[3] The statute at 5 U.S.C. 171 provides:

35 U.S.C. 171 Patents for designs.

Whoever invents any new, original, and ornamental design for an article of manufacture may obtain a patent therefor, subject to the conditions and requirements of this title.

The provisions of this title relating to patents for inventions shall apply to patents for designs, except as otherwise provided.

on utility applications] shall apply to patents for designs, except as otherwise provided." (Emphasis supplied.)

As set forth above, the guiding statute, 5 U.S.C. §112, states clearly and unequivocally that an application ". . . specification shall conclude with one . . . claim[ ] particularly pointing out and distinctly claiming the subject matter which the applicant regards as his invention." (Emphasis supplied.)

There is no statutory provision that exempts a design application from the requirement that it contain a claim.

Not surprisingly, the regulations at 37 C.F.R. §1.151[4] provide that, in the absence of express exceptions, the rules that apply to utility applications apply to design applications.

Moreover, the regulations at 37 C.F.R. §1.153[5] require that the single claim allowed in a design application "shall be in formal terms to the ornamental design for the article . . . as shown or as shown and described."

Again, there is no regulatory exemption for a design application from the requirement that it contain a claim.

Finally, the commentary at MPEP §1503.03[6] offers no suggestion that the Office has dispensed

---

[4] The regulations at 37 C.F.R. §1.151 provide:
§1.151 Rules applicable.
The rules relating to applications for patents for other inventions or discoveries are also applicable to applications for patents for designs except as otherwise provided.

[5] The regulations at 37 C.F.R. §1.153 provide:
§1.153 Title, description and claim, oath or declaration.
(a) The title of the design must designate the particular article. No description, other than a reference to the drawing, is ordinarily required. The claim shall be in formal terms to the ornamental design for the article (specifying name) as shown, or as shown and described. More than one claim is neither required nor permitted.
(b)The oath or declaration required of the applicant must comply with § 1.63.
[24 FR 10332, Dec.22,1959;29 FR 18503, Dec.29, 1964; para.(b),48 FR 2712, Jan. 20, 1983, effective Feb. 27,1983]

[6] The commentary at §1503.03 states:
§1503.03 Design Claim
The requirements for utility claims specified in 37 C.F.R. 1.75 do not apply to design claims. Instead, the form and content of a design claim is set forth in 37 C.F.R. 1.153:

37 C.F.R. §1.153....claim...
(a)...The claim shall be in formal terms to the ornamental design for the article (specifying name)as shown or as shown and described. More than one claim is neither required nor permitted.

*****

A design patent application may only include a single claim. The single claim should normally be in formal terms to "The ornamental design for *(the article which embodies the design or to which it is applied)* as shown." The description of the article in the claim should be consistent in terminology with the title of the invention. See MPEP §1503.01, subsection I. When the specification includes a proper special description of the design (see MPEP §1503.01, subsection II),or a proper showing of modified forms of the design or other descriptive matter has been included in the specification, the words "and described "must be added to the claim following the term "shown ";i.e.,the claim must read "The ornamental design for (*the article which embodies the design or to which it is applied*)as shown and described."

with the formal statutory requirements of stating a claim--and, of course, that would not be possible in any case. (See: 37 C.F.R. §1.183.[7])

As noted above, an examination of the record indicates that the application was filed with:

- no claim language in the specification;
- an undetermined number of pages of an oath/declaration.

Accordingly, the instant petition is **dismissed**.

As to presence of the incorporation by reference language in the one page of the specification filed:

The commentary at MPEP §201.06(c) provides:

> B. Application Entitled to a Filing Date
>
> If a continuation or divisional application as originally filed is entitled to a filing date despite the omission of a portion of the prior application(s), applicant will be permitted to add the omitted material by way of an amendment provided a statement was included in the application as originally filed that incorporates by reference the prior application(s). If the application as originally filed includes a proper incorporation by reference of the prior application(s), an omitted specification page(s) and/or drawing figure(s) identified in a "Notice of Omitted Item(s)" may be added by amendment provided the omitted item(s) contains only subject matter in common with such prior application(s). In such case, applicant need not respond to the "Notice of Omitted Item(s)." Applicant should submit the amendment adding the omitted material prior to the first Office action to avoid delays in the prosecution of the application. See MPEP § 601.01(d) and § 601.01(g).

The claimed design is shown by full lines in the drawing. It is not permissible to show any portion of the claimed design in broken lines. There are no portions of the claimed design which are immaterial or unimportant, and elements shown in broken lines in the drawing are not part of the claim. See MPEP §1503.02, subsection III, and *In re Blum*, 374 F.2d 904,153 USPQ 177 (CCPA 1967).

[7] The regulations at 37 C.F.R. §1.183 provide:
§1.183. Suspension of the rules.
In an extraordinary situation, when justice requires, any requirement of the regulations in this part which is not a requirement of the statutes may be suspended or waived by the Commissioner or the Commissioner's designee, *sua sponte*, or on petition of the interested party, subject to such other requirements as may be imposed. Any petition under this section must be accompanied by the petition fee set forth in §1.17(h).
[47 Fed. Reg. 41278, Sept.17, 1982, effective Oct.1,1982] (Emphasis supplied.)

If Applicants/Petitioners desire that page 2 of the specification, along with the two-page oath/declaration (pages 2 and 3), be added to the application, the appropriate procedure is by way of amendment requesting the entry of the pages(s). Any such amendment should be filed prior to the first action on the merits and will be considered by the primary examiner.

Petitioners have yet to file such an amendment.

Please note: the petition fee will not be refunded, since the petition was not necessitated by any error on the part of the Office.

The application will be forwarded to Technology Center 2900 for examination in due course.

Telephone inquiries concerning this decision may be directed to the undersigned at (571) 272-3214.

John J. Gillon, Jr.
Senior Attorney
Office of Petitions

UNITED STATES PATENT AND TRADEMARK OFFICE

Commissioner for Patents
United States Patent and Trademark Office
P.O. Box 1450
Alexandria, VA 22313-1450
www.uspto.gov

ALLEMAN HALL MCCOY RUSSELL & TUTTLE LLP
806 SW BROADWAY
SUITE 600
PORTLAND OR 97205-3335

COPY MAILED

NOV 19 2007

OFFICE OF PETITIONS

In re Application of	:	
Salvatori et al.	:	
Application No. 29/208,037	:	ON PETITION
Filed: June 22, 2004	:	
Attorney Docket No. IFC309C	:	

This is a decision on the petition under 37 C.F.R. § 1.137(b), filed October 15, 2007, to revive the above-identified application.

The petition is **DISMISSED**.

Any request for reconsideration must be submitted within TWO (2) MONTHS from the mail date of this decision. No further petition fee is required for the request. Extensions of time under 37 CFR 1.136(a) are permitted. The reconsideration request should include a cover letter entitled "Renewed Petition under 37 CFR 1.137(b)." This is **not** a final agency action within the meaning of 5 U.S.C. § 704.

A grantable petition under 37 CFR 1.137(b) must be accompanied by:
(1) the required reply,[1]
(2) the petition fee,
(3) a statement that the entire delay in filing the required reply from the due date for the reply until the filing of a grantable petition pursuant to 37 CFR 1.137(b) was unintentional, and
(4) a terminal disclaimer and fee if the application was filed on or before June 8, 1995 or if the application is a design application.

Where there is a question as to whether either the abandonment or the delay in filing a petition under 37 CFR 1.137 was unintentional, the Commissioner may require additional information.[2]

The instant petition lacks item(s) (4). Since the instant application is a design application, a terminal disclaimer and fee are required for revival under 37 CFR 1.137(b). A blank terminal disclaimer form is enclosed for petitioner's convenience.

Further correspondence with respect to this matter should be addressed as follows:

---

[1] In a nonprovisional application abandoned for failure to prosecute, the required reply may be met by the filing of a continuing application. In an application or patent, abandoned or lapsed for failure to pay the issue fee or any portion thereof, the required reply must be the payment of the issue fee or any outstanding balance thereof.

[2] See MPEP 711.03(c)(III)(C) and (D).

By mail: Mail Stop PETITIONS
Commissioner for Patents
Post Office Box 1450
Alexandria, VA 22313-1450

By hand: Customer Window located at:

U.S. Patent and Trademark Office
Customer Service Window Randolph Building
401 Dulany Street
Alexandria, VA 22314

By fax: (571) 273-8300
ATTN: Office of Petitions

Any questions concerning this matter may be directed to the undersigned at (571) 272-3206.

Liana Walsh
Petitions Examiner
Office of Petitions

Enclosure: PTO/SB/63

PTO/SB/63 (11-07)
Approved for use through 11/30/2007. OMB 0651-0031
U.S. Patent and Trademark Office; U.S. DEPARTMENT OF COMMERCE
Under the Paperwork Reduction Act of 1995, no persons are required to a collection of information unless it displays a valid OMB control number.

TERMINAL DISCLAIMER TO ACCOMPANY PETITION

Docket Number (Optional)

In re Application of:

Name:

Application Number:

Filed:

For:

The owner*, _____ of _____ percent interest in the above-identified application hereby disclaims a terminal part of the term of any patent granted the above-identified application equivalent to: (1) if the above-identified application is a design application, the period of abandonment of the above-identified application, and (2) if the above-identified application is a utility or plant application, the lesser of: (a) the period of abandonment of the application; or (b) the period extending beyond twenty years from the date on which the above-identified application was filed in the United States or, if the application contains a specific reference to an earlier filed application(s) under 35 U.S.C. 120, 121, or 365(c), from the date on which the earliest such application was filed. This disclaimer also applies to any patent granted on a utility or plant application filed before June 8, 1995, or a design application, that contains a specific reference under 35 U.S.C. 120, 121, or 365(c) to the above-identified application. This disclaimer is binding upon the grantee, and its successors or assigns.

Check either box 1 or 2 below, if appropriate.

1. ☐ For submissions on behalf of an organization (e.g., corporation, partnership, university, government agency, etc.), the undersigned is empowered to act on behalf of the organization.
2. ☐ The undersigned is an attorney or agent of record. Registration Number_____.

Signature	Date
Typed or Printed Name	Telephone Number

☐ Terminal disclaimer fee under 37 CFR 1.20(d) included.

WARNING: Information on this form may become public. Credit card information should not be included on this form. Provide credit card information and authorization on PTO-2038.

* Statement under 37 CFR 3.73(b) is required if terminal disclaimer is signed by the assignee (owner). Form PTO/SB/96 may be used for making this certification. See MPEP § 324.

This collection of information is required by 37 CFR 1.137. The information is required to obtain or retain a benefit by the public which is to file (and by the USPTO to process) an application. Confidentiality is governed by 35 U.S.C. 122 and 37 CFR 1.11 and 1.14. This collection is estimated to take 12 minutes to complete, including gathering, preparing, and submitting the completed application form to the USPTO. Time will vary depending upon the individual case. Any comments on the amount of time you require to complete this form and/or suggestions for reducing this burden, should be sent to the Chief Information Officer, U.S. Patent and Trademark Office, U.S. Department of Commerce, P.O. Box 1450, Alexandria, VA 22313-1450. DO NOT SEND FEES OR COMPLETED FORMS TO THIS ADDRESS. **SEND TO: Commissioner for Patents, P.O. Box 1450, Alexandria, VA 22313-1450.**

If you need assistance in completing the form, call 1-800-PTO-9199 and select option 2.

Privacy Act Statement

The **Privacy Act of 1974 (P.L. 93-579)** requires that you be given certain information in connection with your submission of the attached form related to a patent application or patent. Accordingly, pursuant to the requirements of the Act, please be advised that: (1) the general authority for the collection of this information is 35 U.S.C. 2(b)(2); (2) furnishing of the information solicited is voluntary; and (3) the principal purpose for which the information is used by the U.S. Patent and Trademark Office is to process and/or examine your submission related to a patent application or patent. If you do not furnish the requested information, the U.S. Patent and Trademark Office may not be able to process and/or examine your submission, which may result in termination of proceedings or abandonment of the application or expiration of the patent.

The information provided by you in this form will be subject to the following routine uses:

1. The information on this form will be treated confidentially to the extent allowed under the Freedom of Information Act (5 U.S.C. 552) and the Privacy Act (5 U.S.C 552a). Records from this system of records may be disclosed to the Department of Justice to determine whether disclosure of these records is required by the Freedom of Information Act.
2. A record from this system of records may be disclosed, as a routine use, in the course of presenting evidence to a court, magistrate, or administrative tribunal, including disclosures to opposing counsel in the course of settlement negotiations.
3. A record in this system of records may be disclosed, as a routine use, to a Member of Congress submitting a request involving an individual, to whom the record pertains, when the individual has requested assistance from the Member with respect to the subject matter of the record.
4. A record in this system of records may be disclosed, as a routine use, to a contractor of the Agency having need for the information in order to perform a contract. Recipients of information shall be required to comply with the requirements of the Privacy Act of 1974, as amended, pursuant to 5 U.S.C. 552a(m).
5. A record related to an International Application filed under the Patent Cooperation Treaty in this system of records may be disclosed, as a routine use, to the International Bureau of the World Intellectual Property Organization, pursuant to the Patent Cooperation Treaty.
6. A record in this system of records may be disclosed, as a routine use, to another federal agency for purposes of National Security review (35 U.S.C. 181) and for review pursuant to the Atomic Energy Act (42 U.S.C. 218(c)).
7. A record from this system of records may be disclosed, as a routine use, to the Administrator, General Services, or his/her designee, during an inspection of records conducted by GSA as part of that agency's responsibility to recommend improvements in records management practices and programs, under authority of 44 U.S.C. 2904 and 2906. Such disclosure shall be made in accordance with the GSA regulations governing inspection of records for this purpose, and any other relevant (*i.e.*, GSA or Commerce) directive. Such disclosure shall not be used to make determinations about individuals.
8. A record from this system of records may be disclosed, as a routine use, to the public after either publication of the application pursuant to 35 U.S.C. 122(b) or issuance of a patent pursuant to 35 U.S.C. 151. Further, a record may be disclosed, subject to the limitations of 37 CFR 1.14, as a routine use, to the public if the record was filed in an application which became abandoned or in which the proceedings were terminated and which application is referenced by either a published application, an application open to public inspection or an issued patent.
9. A record from this system of records may be disclosed, as a routine use, to a Federal, State, or local law enforcement agency, if the USPTO becomes aware of a violation or potential violation of law or regulation.

UNITED STATES PATENT AND TRADEMARK OFFICE

Commissioner for Patents
United States Patent and Trademark Office
P.O. Box 1450
Alexandria, VA 22313-1450
www.uspto.gov

ALLEMAN HALL MCCOY RUSSELL & TUTTLE LLP
806 SW BROADWAY
SUITE 600
PORTLAND OR 97205-3335

COPY MAILED

JAN 10 2008

OFFICE OF PETITIONS

In re Application of	:	
Salvatori et al.	:	
Application No. 29/208,037	:	DECISION ON PETITION
Filed: June 22, 2004	:	
Attorney Docket No. IFC309C	:	

This is a decision on the renewed petition under the unintentional provisions of 37 CFR 1.137(b), filed December 6, 2007, to revive the above-identified application.

The petition is **GRANTED**.

The terminal disclaimer has been received and is hereby accepted.

Telephone inquiries concerning this decision should be directed to the undersigned at (571) 272-3206.

This matter is being referred to the Publishing Division for processing into a patent.

Liana Walsh
Petitions Examiner
Office of Petitions

UNITED STATES PATENT AND TRADEMARK OFFICE

Commissioner for Patents
United States Patent and Trademark Office
P.O. Box 1450
Alexandria, VA 22313-1450
www.uspto.gov

AUG 17 2004

TRASK BRITT
P.O. BOX 2550
SALT LAKE CITY UT 84110

In re Application of	:	
Leonard Wozniak	:	
Serial No.: 29/208,067	:	DECISION ON PETITION
Filed: June 23, 2004	:	
For: Side Element of a Shoe Upper	:	

This is in response to the petition applicant filed on June 28, 2004, to make the above-identified application special under the provisions of 37 CFR 1.102(d).

Applicant has satisfied the provisions set forth in M.P.E.P. 708.02, VIII, thus the petition is **GRANTED**.

The application will be forwarded to the examiner for action on the merits commensurate with this decision.

Should there be any questions with regard to this letter please contact John Kittle by letter addressed to the Director, Technology Center 3700/2900, P.O. Box 1450 Alexandria, VA 22313-1450, or by telephone at (703) 308-0873 or by facsimile transmission at (703) 308-3139.

John E. Kittle

John E. Kittle
Director
Technology Center 3700/2900

UNITED STATES PATENT AND TRADEMARK OFFICE

Commissioner for Patents
United States Patent and Trademark Office
P.O. Box 1450
Alexandria, VA 22313-1450
www.uspto.gov

JOHN D. GUGLIOTTA
202 DELAWARE BUILDING
137 S. MAIN STREET
SUITE 202
AKRON, OH 44308

COPY MAILED
MAR 21 2006
OFFICE OF PETITIONS

In re Application of	:	
SMALLS et al.	:	
Application No. 29/208,085	:	ON PETITION
Filed: June 24, 2004	:	
Attorney Docket No. 1482	:	

This is a decision on the petition under 37 CFR 1.137(b), filed September 22, 2005, to revive the above-identified application.

The petition is **DISMISSED**.

Any request for reconsideration of this decision must be submitted within TWO (2) MONTHS from the mail date of this decision. Extensions of time under 37 CFR 1.136(a) are permitted. The reconsideration request should include a cover letter entitled "Renewed Petition under 37 CFR 1.137(b)." This is **not** a final agency action within the meaning of 5 U.S.C. § 704.

The application became abandoned for failure submit the issue fee in a timely manner in reply to the Notice of Allowance and Fee(s) Due, mailed April 21, 2005, which set a statutory period for reply of three (3) months. Accordingly, the application became abandoned on July 22, 2005.

A grantable petition under 37 CFR 1.137(b) must be accompanied by: (1) the required reply, unless previously filed; (2) the petition fee as set forth in 37 CFR 1.17(m); (3) a statement that the entire delay in filing the required reply from the due date for the reply until the filing of a grantable petition pursuant to 37 CFR 1.137(b) was unintentional; and (4) any terminal disclaimer (and fee as set forth in 37 CFR 1.20(d)) required by 37 CFR 1.137(d). Where there is a question as to whether either the abandonment or the delay in filing a petition under 37 CFR 1.137 was unintentional, the Commissioner may require additional information. See MPEP 711.03(c)(III)(C) and (D). The instant petition lacks above item (4).

Since the above-identified application is a design application, 37 CFR 1.137(d) requires a terminal disclaimer dedicating to the public a terminal part of the term of any patent granted on the application. The period to be disclaimed will be a terminal part of the patent to be granted equivalent to the period of abandonment. The period of abandonment will be computed to be the number of months from the date of abandonment to the date of filing a grantable petition. A terminal disclaimer fee of $130 ($65 if small entity) is required. If the terminal disclaimer is signed by an assignee, the assignee must comply with the requirements of 37 CFR 3.73(b).

Further correspondence with respect to this matter should be addressed as follows:

By Mail: Mail Stop PETITION
Commissioner for Patents
P. O. Box 1450
Alexandria, VA 22313-1450

By hand: U. S. Patent and Trademark Office
Customer Service Window, Mail Stop Petitions
Randolph Building
401 Dulany Street
Alexandria, VA 22314

The centralized facsimile number is (571) 273-8300.

Telephone inquiries concerning this decision should be directed to the undersigned at (571) 272-4787.

Denise Pothier
Petitions Examiner
Office of Petitions

UNITED STATES PATENT AND TRADEMARK OFFICE

Commissioner for Patents
United States Patent and Trademark Office
P.O. Box 1450
Alexandria, VA 22313-1450
www.uspto.gov

Law Offices of John D. Gugliotta, PE, Esq.
202 Delaware Building
137 South Main Street
Suite 202
Akron OH 44308

COPY MAILED

APR 2 0 2006

OFFICE OF PETITIONS

In re Application of	:	
SMALLS et al.	:	DECISION
Application No. 29/208,085	:	ON PETITION
Filed: June 24, 2004	:	
Attorney Docket No. 1482	:	

This is a decision on a renewed petition under 37 CFR 1.137(b), filed April 3, 2006, to revive the above-identified application.

The petition is **GRANTED**.

The application became abandoned for failure submit the issue fee in a timely manner in reply to the Notice of Allowance and Fee(s) Due, mailed April 21, 2005, which set a statutory period for reply of three (3) months. Accordingly, the application became abandoned on July 22, 2005.

The petition satisfies the conditions for revival pursuant to the provisions of 37 CFR 1.137(b) in that (1) the reply in the form of the issue fee and corrected drawings; (2) the petition fee of $750; (3) the required statement of unintentional delay; and (4) the terminal disclaimer required by 37 CFR 1.137(d) have been received. Accordingly, the issue fee payment and corrected drawings are accepted as having been unintentionally delayed.

Telephone inquiries concerning this decision should be directed to undersigned at (571) 272-4787.

The application matter is referred to the Office of Patent Publication.

Denise Pothier
Petitions Examiner
Office of Petitions

enc: PTO-948

UNITED STATES PATENT AND TRADEMARK OFFICE

Commissioner for Patents
United States Patent and Trademark Office
P.O. Box 1450
Alexandria, VA 22313-1450
www.uspto.gov

AUG 17 2004

TRASK BRITT
P.O. BOX 2550
SALT LAKE CITY UT 84110

In re Application of	:	
Peter M. Fogg	:	
Serial No.: 29/208,091	:	DECISION ON PETITION
Filed: June 23, 2004	:	
For: Side Element of a Shoe Upper	:	

This is in response to the petition applicant filed on June 23, 2004, to make the above-identified application special under the provisions of 37 CFR 1.102(d).

Applicant has satisfied the provisions set forth in M.P.E.P. 708.02, VIII, thus the petition is **GRANTED**.

The application will be forwarded to the examiner for action on the merits commensurate with this decision.

Should there be any questions with regard to this letter please contact John Kittle by letter addressed to the Director, Technology Center 3700/2900, P.O. Box 1450 Alexandria, VA 22313-1450, or by telephone at (703) 308-0873 or by facsimile transmission at (703) 308-3139.

John E. Kittle
Director
Technology Center 3700/2900

UNITED STATES PATENT AND TRADEMARK OFFICE

Commissioner for Patents
United States Patent and Trademark Office
P.O. Box 1450
Alexandria, VA 22313-1450
www.uspto.gov

AUG 17 2004

TRASK BRITT
P.O. BOX 2550
SALT LAKE CITY UT 84110

In re Application of	:	
Peter M. Fogg	:	
Serial No.: 29/208,093	:	DECISION ON PETITION
Filed: June 23, 2004	:	
For: Portion of a Shoe	:	

This is in response to the petition applicant filed on June 23, 2004, to make the above-identified application special under the provisions of 37 CFR 1.102(d).

Applicant has satisfied the provisions set forth in M.P.E.P. 708.02, VIII, thus the petition is **GRANTED**.

The application will be forwarded to the examiner for action on the merits commensurate with this decision.

Should there be any questions with regard to this letter please contact John Kittle by letter addressed to the Director, Technology Center 3700/2900, P.O. Box 1450 Alexandria, VA 22313-1450, or by telephone at (703) 308-0873 or by facsimile transmission at (703) 308-3139.

John E. Kittle

John E. Kittle
Director
Technology Center 3700/2900

UNITED STATES PATENT AND TRADEMARK OFFICE

Commissioner for Patents
United States Patent and Trademark Office
P.O. Box 1450
Alexandria, VA 22313-1450
www.uspto.gov

LAW OFFICE OF STEVEN B. LEAVITT, LLP
9914 WATERVIEW PARKWAY
ROWLETT, TX 75089

8/15/05

In re Application of
Leslie Albertini
Serial No.: 29/208,125
Filed: June 24, 2004
Attorney Docket No.: ALBE.00001

: PETITION DECISION

This is a decision on applicant's petition to revive patent application under 37 CFR 1.137(b), filed July 8, 2005, to revive an unintentionally abandoned application.

This application became abandoned for failure to respond to the Notice of Allowance mailed September 29, 2004, which set a three-month statutory period to submit the Issue Fee and formal drawings. The Issue fee was submitted December 27, 2004; however, as no formal drawings were received by December 29, 2004, a Notice of Abandonment was mailed February 18, 2005. Applicant then filed this petition.

A grantable petition for a design application under 37 CFR 1.137(b), as revised December 1, 1997, requires four items: (1) a petition and petition fee; (2) a complete response if not earlier made; (3) a statement that the entire period of delay in prosecution was unintentional; and (4) a terminal disclaimer and disclaimer fee.

Applicant's petition is **GRANTED**.

The application will be forwarded to Publication Division for printing as a patent in due course.

Should there be any questions with respect to this decision, please contact Sandra Morris; by mail addressed to: Director, Technology Center 1700/2900, P.O. Box 1450, Alexandria, VA 22313-1450; or by telephone at (571) 272-2622.

Jacqueline M. Stone

Jacqueline Stone
Director, Technology Center 1700/2900

UNITED STATES PATENT AND TRADEMARK OFFICE

Commissioner for Patents
United States Patent and Trademark Office
P.O. Box 1450
Alexandria, VA 22313-1450
www.uspto.gov

MCDERMOTT WILL & EMERY LLP
600 13TH STREET, N.W.
WASHINGTON DC 20005-3096

COPY MAILED

JUN 19 2007

OFFICE OF PETITIONS

In re Patent No. D530,339 :
Issue Date: October 17, 2006 :
Application No. 29/208,172 :
Filed: June 23, 2004 :
Attorney Docket No. 03356/0200405-US0 :

ON PETITION

This is a decision on the petition filed November 15, 2006, which is being treated as a request under 37 CFR 3.81(b)[1] to correct the name of the assignee on the front page of the above-identified patent by way of a Certificate of Correction.

The request is **GRANTED**.

It appears that a certificate of correction was issued on January 2, 2007.

Telephone inquiries concerning this decision may be directed to the undersigned at (571) 272-3230. Inquiries regarding the certificate of correction should be directed to the Certificate of Correction Branch at (571) 272-4200.

The application file will be returned to Files Repository.

Shirene Willis Brantley
Senior Petitions Attorney
Office of Petitions

[1] *See* MPEP 1309, subsection II; and Official Gazette of June 22, 2004.

UNITED STATES PATENT AND TRADEMARK OFFICE

Commissioner for Patents
United States Patent and Trademark Office
P.O. Box 1450
Alexandria, VA 22313-1450
www.uspto.gov

AUG 17 2004

AKIN GUMP STRAUSS HAUER & FELD L.L.P.
ONE COMMERCE SQUARE
2005 MARKET STREET, SUITE 2200
PHILADELPHIA PA 19103-7013

In re Application	:	
Frederick N. Biesecker	:	
Serial No.: 29/208,176	:	DECISION ON PETITION
Filed: June 24, 2004	:	
For: Bottle Cap	:	

This is in response to applicants' petition filed June 24, 2004, to make the above-identified application special under the provisions of 37 CFR 1.102(c), based on the age of the applicant.

Applicant has satisfied the provisions set forth in M.P.E.P. 708.02, IV. Therefore the petition is **GRANTED**.

The application will be forwarded to the examiner for action on the merits commensurate with this decision.

Should there be any questions with regard to this letter please contact John Kittle by letter addressed to the Director, Technology Center 3700/2900, P.O. Box 1450 Alexandria, VA 22313-1450, or by telephone at (703) 308-0873 or by facsimile transmission at (703) 308-3139.

John E. Kittle
Director
Technology Center 3700/2900

JAN 04 2005

FILE COPY
DESIGN

IN THE UNITED STATES PATENT AND TRADEMARK OFFICE

In re Application of:	)	
Seiya Ohta	)	
Serial No.: 29/208,183	)	Group Art Unit: ~~2913~~ 2911
Filed: June 25, 2004	)	Examiner: TBA Nunn, R
For: **MOVEABLE CONTROL ELEMENT FOR A KEYBOARD**	)	Attorney Docket No.: 013797.00439

PETITION TO MAKE SPECIAL UNDER 37 C.F.R. §1.102(d)
AND INFORMATION DISCLOSURE STATEMENT

PETITION GRANTED

William Krynski
Special Program Examiner
TC 1700
2-10-05

Mail Stop Design
Commissioner for Patents
P. O. Box 1450
Alexandria, VA 22313-1450

Dear Sir:

Applicant hereby petitions the Commissioner to make this application special under 37 C.F.R. §1.102(d) and under the guidelines of M.P.E.P. §708.02(VIII).

A pre-examination search was conducted at the U.S. Patent and Trademark Office by Mr. Tuan Nguyen, a registered patent agent and a professional searcher with PatPro, Suite 309A, Crystal Plaza One, 2001 Jefferson Davis Highway, Arlington, VA 22202. The search was conducted in class D13 in the following subclasses: 170, 171; in class D14 in the following subclasses: 247, 338, 346, 383, 384, 387, 390, 391, 392, 393, 394, 395, 396, 397, 398, 399, 400, 401, 412, 415, 454, 455, 456, and 457; in class D21 in the following subclasses: 331, 333; in class 200 in the following subclasses: 5R, 547, 548, 549, and 550; in class 341 in the following subclasses: 22; in class 345 in the following subclasses: 168, 169, and 184; in class 400 in the following subclasses: 472, 485, 489, and 490; in class 463 in the following subclasses: 37, 39.

01/05/2005 JBALIMAN 00000102 190733 29208183
01 FC:1464 130.00 DA

OIPE JC98
JAN 04 2005
TRADEMARK OFFICE

FILE COPY

DESIGN

IN THE UNITED STATES PATENT AND TRADEMARK OFFICE

In re Application of:	)	
Seiya Ohta	)	
Serial No.: 29/208,184	)	Group Art Unit: ~~2913~~ 2911
Filed: June 25, 2004	)	Examiner: TBA Nunn
For: **KEYBOARD**	)	Attorney Docket No.: 013797.00440

PETITION TO MAKE SPECIAL UNDER 37 C.F.R. §1.102(d)
AND INFORMATION DISCLOSURE STATEMENT

PETITION GRANTED

William Krynski
Special Program Examiner
TC 1700
2-10-05

Mail Stop Design
Commissioner for Patents
P. O. Box 1450
Alexandria, VA 22313-1450

Dear Sir:

Applicant hereby petitions the Commissioner to make this application special under 37 C.F.R. §1.102(d) and under the guidelines of M.P.E.P. §708.02(VIII).

A pre-examination search was conducted at the U.S. Patent and Trademark Office by Mr. Tuan Nguyen, a registered patent agent and a professional searcher with PatPro, Suite 309A, Crystal Plaza One, 2001 Jefferson Davis Highway, Arlington, VA 22202. The search was conducted in class D 13 in the following subclasses: 170, 171; in class D14 in the following subclasses: 247, 338, 346, 383, 384, 387, 390, 391, 392, 393, 394, 395, 396, 397, 398, 399, 400, 401, 412, 415, 454, 455, 456, and 457; in class D21 in the following subclasses: 331, 333; in class 200 in the following subclasses 5R, 547, 548, 549, and 550; in class 341 in the following subclasses: 22; in class 345 in the following subclasses: 168, 169 and 184; in class 400 in the following subclasses: 472, 485, 489, and 490; in class 463 in the following subclasses: 37, 39.

01/05/2005 JBALINAN 00000104 190733 29208184
01 FC:1464 130.00 DA

OIPE JC98
JAN 04 2005
OFFICE

FILE COPY

DESIGN

IN THE UNITED STATES PATENT AND TRADEMARK OFFICE

In re Application of:	)	
Seiya Ohta	)	
Serial No.: 29/208,185	)	Group Art Unit: ~~2913~~ 2911
Filed: June 25, 2004	)	Examiner: TBA Nunn, F
For: **PORTION OF A KEYBOARD**	)	Attorney Docket No.: 013797.00449

PETITION TO MAKE SPECIAL UNDER 37 C.F.R. §1.102(d)
AND INFORMATION DISCLOSURE STATEMENT

PETITION GRANTED

William Krynski
Special Program Examiner
TC 1700
2-10-05

Mail Stop Design
Commissioner for Patents
P. O. Box 1450
Alexandria, VA 22313-1450

Dear Sir:

Applicant hereby petitions the Commissioner to make this application special under 37 C.F.R. §1.102(d) and under the guidelines of M.P.E.P. §708.02(VIII).

A pre-examination search was conducted at the U.S. Patent and Trademark Office by Mr. Tuan Nguyen, a registered patent agent and a professional searcher with PatPro, Suite 309A, Crystal Plaza One, 2001 Jefferson Davis Highway, Arlington, VA 22202. The search was conducted in class D 13 in the following subclasses: 170, 171; in class D14 in the following subclasses: 247, 338, 346, 383, 384, 387, 390, 391, 392, 393, 394, 395, 396, 397, 398, 399, 400, 401, 412, 415, 454, 455, 456, and 457; in class D21 in the following subclasses: 331, 333; in class 200 in the following subclasses 5R, 547, 548, 549, and 550; in class 341 in the following subclasses: 22; in class 345 in the following subclasses: 168, 169 and 184; in class 400 in the following subclasses: 472, 485, 489, and 490; in class 463 in the following subclasses: 37, 39.

01/05/2005 JBALINAN 00000105 190733 29208185
01 FC:1464 130.00 DA

OIPE JC68
JAN 04 2005

FILE COPY

DESIGN

IN THE UNITED STATES PATENT AND TRADEMARK OFFICE

In re Application of:	)	
Seiya Ohta	)	
Serial No.: 29/208,190	)	Group Art Unit: ~~2913~~ 2911
Filed: June 25, 2004	)	Examiner: TBA Nunn
For: **PORTION OF A KEYBOARD**	)	Attorney Docket No.: 013797.00450

PETITION TO MAKE SPECIAL UNDER 37 C.F.R. §1.102(d)
AND INFORMATION DISCLOSURE STATEMENT

PETITION GRANTED

William Krynski
Special Program Examiner
TC 1700
2-10-05

Mail Stop Design
Commissioner for Patents
P. O. Box 1450
Alexandria, VA 22313-1450

Dear Sir:

Applicant hereby petitions the Commissioner to make this application special under 37 C.F.R. §1.102(d) and under the guidelines of M.P.E.P. §708.02(VIII).

A pre-examination search was conducted at the U.S. Patent and Trademark Office by Mr. Tuan Nguyen, a registered patent agent and a professional searcher with PatPro, Suite 309A, Crystal Plaza One, 2001 Jefferson Davis Highway, Arlington, VA 22202. The search was conducted in class D13 in the following subclasses: 170, 171; in class D14 in the following subclasses: 247, 338, 346, 383, 384, 387, 390, 391, 392, 393, 394, 395, 396, 397, 398, 399, 400, 401, 412, 415, 454, 455, 456, and 457; in class D21 in the following subclasses: 331, 333; in class 200 in the following subclasses: 5R, 547, 548, 549, and 550; in class 341 in the following subclasses: 22; in class 345 in the following subclasses: 168, 169, and 184; in class 400 in the following subclasses: 472, 485, 489, and 490; in class 463 in the following subclasses: 37, 39.

01/05/2005 JBALINAN 00000107 190733 29208190
01 FC:1464 130.00 DA

UNITED STATES PATENT AND TRADEMARK OFFICE

Commissioner for Patents
United States Patent and Trademark Office
P.O. Box 1450
Alexandria, VA 22313-1450
www.uspto.gov

OCT 19 2004

BANNER & WITCOFF, LTD
ELEVENTH FLOOR
1001 G STREET, N.W.
WASHINGTON, D.C. 20001-4597

In re Application of	:	
E. Scott Morris	:	
Serial No.: 29/208,209	:	DECISION ON PETITION
Filed: June 28, 2004	:	
For: Portion of a Shoe Midsole	:	

This is in response to the petition applicant filed on September 1, 2004 to make the above-identified application special under the provisions of 37 CFR 1.102(d).

Applicant has satisfied the provisions set forth in M.P.E.P. 708.02, VIII, thus the petition is **GRANTED**.

The application will be forwarded to the examiner for action on the merits commensurate with this decision.

Should there be any questions with regard to this letter please contact John Kittle by letter addressed to the Director, Technology Center 3700/2900, P.O. Box 1450 Alexandria, VA 22313-1450, or by telephone at (703) 308-0873 or by facsimile transmission at (703) 308-3139.

John E. Kittle

John E. Kittle
Director
Technology Center 3700/2900

UNITED STATES PATENT AND TRADEMARK OFFICE

Commissioner for Patents
United States Patent and Trademark Office
P.O. Box 1450
Alexandria, VA 22313-1450
www.uspto.gov

SEP 08 2004

BANNER & WITCOFF
1001 G STREET N W
SUITE 1100
WASHINGTON DC 20001

In re Application of	:	
E. Scott Morris	:	
Serial No.: 29/208,210	:	DECISION ON PETITION
Filed: June 28, 2004	:	
For: Portion of a Shoe Upper	:	

This is in response to the petition applicant filed on July 29, 2004 to make the above-identified application special under the provisions of 37 CFR 1.102(d).

Applicant has satisfied the provisions set forth in M.P.E.P. 708.02, VIII, thus the petition is **GRANTED**.

The application will be forwarded to the examiner for action on the merits commensurate with this decision.

Should there be any questions with regard to this letter please contact John Kittle by letter addressed to the Director, Technology Center 3700/2900, P.O. Box 1450 Alexandria, VA 22313-1450, or by telephone at (703) 308-0873 or by facsimile transmission at (703) 308-3139.

John E. Kittle
Director
Technology Center 3700/2900

UNITED STATES PATENT AND TRADEMARK OFFICE

Commissioner for Patents
United States Patent and Trademark Office
P.O. Box 1450
Alexandria, VA 22313-1450
www.uspto.gov

SEP 02 2004

BANNER & WITCOFF
1001 G STREET N W
SUITE 1100
WASHINGTON DC 20001

In re Application of	:	
Tae Yong Lee	:	
Serial No.: 29/208,211	:	DECISION ON PETITION
Filed: June 28, 2004	:	
For: Portion of a Shoe Upper	:	

This is in response to the petition applicant filed on July 29, 2004 to make the above-identified application special under the provisions of 37 CFR 1.102(d).

Applicant has satisfied the provisions set forth in M.P.E.P. 708.02, VIII, thus the petition is **GRANTED**.

The application will be forwarded to the examiner for action on the merits commensurate with this decision.

Should there be any questions with regard to this letter please contact John Kittle by letter addressed to the Director, Technology Center 3700/2900, P.O. Box 1450 Alexandria, VA 22313-1450, or by telephone at (703) 308-0873 or by facsimile transmission at (703) 308-3139.

John E. Kittle

John E. Kittle
Director
Technology Center 3700/2900

UNITED STATES PATENT AND TRADEMARK OFFICE

Commissioner for Patents
United States Patent and Trademark Office
P.O. Box 1450
Alexandria, VA 22313-1450
www.uspto.gov

JUN 13 2005

In re Application of	:	
Matthew J. Holmes	:	
Serial Number: 29/208,212	:	PETITION UNDER
Filed: June 28, 2004	:	M.P.E.P.708.02 VIII
For: PORTION OF A SHOE MIDSOLE	:	

This is in response to the petition filed July 22, 2004, requesting that the above-identified application be granted Special Status under Section 708.02 VIII of the MPEP.

A petition for Special Status under Section 708.02 VIII is required to include a detailed discussion of the references, which points out how the claimed subject matter is patentable over the references cited in the pre-examination search (MPEP 708.02 VIII (E)). The instant petition includes a general assertion that the claimed design is neither anticipated by nor obvious over any of the cited references but does not include a detailed discussion of the references as required.

Accordingly the petition is **DENIED.**

Richard Crispino
Special Programs Examiner

BANNER & WITCOFF
1001 G STREET NW
SUITE 1100
WASHINGTON, DC 20001

UNITED STATES PATENT AND TRADEMARK OFFICE

Commissioner for Patents
United States Patent and Trademark Office
P.O. Box 1450
Alexandria, VA 22313-1450
www.uspto.gov

OCT 19 2004

BANNER & WITCOFF, LTD
ELEVENTH FLOOR
1001 G STREET, N.W.
WASHINGTON, D.C. 20001-4597

In re Application of	:	
William J. Cass	:	
Serial No.: 29/208,213	:	DECISION ON PETITION
Filed: June 28, 2004	:	
For: Portion of a Shoe Upper	:	

This is in response to the petition applicant filed on September 3, 2004 to make the above-identified application special under the provisions of 37 CFR 1.102(d).

Applicant has satisfied the provisions set forth in M.P.E.P. 708.02, VIII, thus the petition is **GRANTED**.

The application will be forwarded to the examiner for action on the merits commensurate with this decision.

Should there be any questions with regard to this letter please contact John Kittle by letter addressed to the Director, Technology Center 3700/2900, P.O. Box 1450 Alexandria, VA 22313-1450, or by telephone at (703) 308-0873 or by facsimile transmission at (703) 308-3139.

John E. Kittle

John E. Kittle
Director
Technology Center 3700/2900

UNITED STATES PATENT AND TRADEMARK OFFICE

Commissioner for Patents
United States Patent and Trademark Office
P.O. Box 1450
Alexandria, VA 22313-1450
www.uspto.gov

2-10-05

In re Application of Steven W. Fisher Serial Number: 29/208,215 Filed: June 28, 2004 For: ELECTRONIC MOUSE	ap PETITION UNDER M.P.E.P.708.02 VIII

This is in response to the petition filed January 4, 2005 requesting that the above-identified application be granted Special Status under Sections 708.02 VIII of the MPEP and 37 CFR 1.102 **(no fee required)**.

The request for Special Status considered under Section 708.02 VIII has been dismissed.

Accordingly the petition is **DISMISSED.**

William Krynski, Special Programs Examiner
Technology Center 1700
Chemical and Materials Engineering

BANNER & WITCOFF LTD.,
ATTORNEYS FOR MICROSOFT
1001 G STREET , N.W.
ELEVENTH STREET
WASHINGTON DC 20001-4597

UNITED STATES PATENT AND TRADEMARK OFFICE

Commissioner for Patents
United States Patent and Trademark Office
P.O. Box 1450
Alexandria, VA 22313-1450
www.uspto.gov

ANTONELLI, TERRY, STOUT & KRAUS, LLP
1300 NORTH SEVENTEENTH STREET
SUITE 1800
ARLINGTON VA 22209-3873

COPY MAILED

NOV 04 2005

OFFICE OF PETITIONS

In re Application of :
Toshiyuki Moriya et al. :
Application No. 29/208,223 :
Filed: June 28, 2004 :
Attorney Docket No.: 501.1041D00 :

ON PETITION

This is a decision on the petition filed September 7, 2005 under 37 CFR 1.137(b),[1] to revive the above-identified application.

The petition under 37 CFR 1.137 (b) is **DISMISSED**.

Any further petition to revive the above-identified application must be submitted within TWO (2) MONTHS from the mail date of this decision. Extensions of time under 37 CFR 1.136(b) are permitted. The reconsideration request should include a cover letter entitled "Petition under 37 CFR 1.137." This is **not** final agency action within the meaning of 5 U.S.C. § 704.

This application became abandoned September 7, 2005 for failure to timely pay the issue fee on or before September 6, 2005. The instant petition and this decision precede the mailing of the Notice of Abandonment.

The petition does not satisfy requirement (4) of the regulation.

---

[1] Effective December 1, 1997, the provisions of 37 CFR 1.137(b) now provide that where the delay in reply was unintentional, a petition may be filed to revive an abandoned application or a lapsed patent pursuant to 37 CFR 1.137(b). A grantable petition filed under the provisions of 37 CFR 1.137(b) must be accompanied by:

(1) the required reply, unless previously filed. In a nonprovisional application abandoned for failure to prosecute, the required reply may be met by the filing of a continuing application. In a nonprovisional application filed on or after June 8, 1995, and abandoned for failure to prosecute, the required reply may also be met by the filing of a request for continued examination in compliance with § 1.114. In an application or patent, abandoned or lapsed for failure to pay the issue fee or any portion thereof, the required reply must be the payment of the issue fee or any outstanding balance thereof.

(2) the petition fee as set forth in 37 CFR 1.17(m);

(3) a statement that the entire delay in filing the required reply from the due date for the reply until the filing of a grantable petition pursuant to 37 CFR 1.137(b) was unintentional. The Commissioner may required additional information where there is a question whether the delay was unintentional; and

(4) any terminal disclaimer (and fee as set forth in 37 CFR 1.20(d)) required pursuant to 37 CFR 1.137(c)).

Petitioner must submit a Terminal Disclaimer with any renewed petition since this is a design application. **Petitioner should note that submission of any renewed petition without the required reply will be construed as intentional delay.**

Further correspondence with respect to this matter should be addressed as follows:

By mail: Mail Stop Petitions
Commissioner for Patents
P.O. Box 1450
Alexandria VA 22313-1450

By FAX: (571) 273-8300
ATTN: Office of Petitions

Telephone inquiries concerning this matter may be directed to the undersigned Petitions Attorney at (571) 272-3212.

Patricia Faison-Ball

Patricia Faison-Ball
Senior Petitions Attorney
Office of Petitions

UNITED STATES PATENT AND TRADEMARK OFFICE

Commissioner for Patents
United States Patent and Trademark Office
P.O. Box 1450
Alexandria, VA 22313-1450
www.uspto.gov

ANTONELLI, TERRY, STOUT & KRAUS, LLP
1300 NORTH SEVENTEENTH STREET
SUITE 1800
ARLINGTON VA 22209-3873

COPY MAILED

DEC 08 2005

OFFICE OF PETITIONS

In re Application of :
Toshiyuki Moriya et al. :
Application No. 29/208,223 :
Filed: June 28, 2004 :
Attorney Docket No.: 501.1041D00 :

ON PETITION

This is a decision on the renewed petition filed November 18, 2005 under 37 CFR 1.137(b),[1] to revive the above-identified application.

The petition under 37 CFR 1.137 (b) is **GRANTED**.

This application became abandoned September 7, 2005 for failure to timely pay the issue fee on or before September 6, 2005. Preceding the mailing of the Notice of Abandonment, a petition to revive was filed September 7, 2005 authorizing the payment of the issue fee and petition fee but was dismissed in a decision mailed November 4, 2005 because the petition was not accompanied by a terminal disclaimer.

All other requirements of 37 CFR 1.137(b), including the filing of a terminal disclaimer, having now been met, this matter is being referred to the Publishing Division.

Telephone inquiries concerning this matter may be directed to the undersigned Petitions Attorney at (571) 272-3212.

Patricia Faison-Ball

Patricia Faison-Ball
Senior Petitions Attorney
Office of Petitions

---

[1] Effective December 1, 1997, the provisions of 37 CFR 1.137(b) now provide that where the delay in reply was unintentional, a petition may be filed to revive an abandoned application or a lapsed patent pursuant to 37 CFR 1.137(b). A grantable petition filed under the provisions of 37 CFR 1.137(b) must be accompanied by:

(1) the required reply, unless previously filed. In a nonprovisional application abandoned for failure to prosecute, the required reply may be met by the filing of a continuing application. In a nonprovisional application filed on or after June 8, 1995, and abandoned for failure to prosecute, the required reply may also be met by the filing of a request for continued examination in compliance with § 1.114. In an application or patent, abandoned or lapsed for failure to pay the issue fee or any portion thereof, the required reply must be the payment of the issue fee or any outstanding balance thereof.

(2) the petition fee as set forth in 37 CFR 1.17(m);

(3) a statement that the entire delay in filing the required reply from the due date for the reply until the filing of a grantable petition pursuant to 37 CFR 1.137(b) was unintentional. The Commissioner may required additional information where there is a question whether the delay was unintentional; and

(4) any terminal disclaimer (and fee as set forth in 37 CFR 1.20(d)) required pursuant to 37 CFR 1.137(c)).

UNITED STATES PATENT AND TRADEMARK OFFICE

Commissioner for Patents
United States Patent and Trademark Office
P.O. Box 1450
Alexandria, VA 22313-1450
www.uspto.gov

SEP 28 2004

BANNER & WITCOFF
1001 G STREET N W
SUITE 1100
WASHINGTON DC 20001

In re Application of	:	
Sean McDowell	:	
Serial No.: 29/208,227	:	DECISION ON PETITION
Filed: June 28, 2004	:	
For: Portion Of A Shoe Upper	:	

This is in response to the petition applicant filed on August 16, 2004 to make the above-identified application special under the provisions of 37 CFR 1.102(d).

Applicant has satisfied the provisions set forth in M.P.E.P. 708.02, VIII, thus the petition is **GRANTED**.

The application will be forwarded to the examiner for action on the merits commensurate with this decision.

Should there be any questions with regard to this letter please contact John Kittle by letter addressed to the Director, Technology Center 3700/2900, P.O. Box 1450 Alexandria, VA 22313-1450, or by telephone at (703) 308-0873 or by facsimile transmission at (703) 308-3139.

John E. Kittle

John E. Kittle
Director
Technology Center 3700/2900

UNITED STATES PATENT AND TRADEMARK OFFICE

Commissioner for Patents
United States Patent and Trademark Office
P.O. Box 1450
Alexandria, VA 22313-1450
www.uspto.gov

COPY MAILED

AUG 17 2007

OFFICE OF PETITIONS

BRINKS HOFER GILSON & LIONE
P.O. BOX 10395
CHICAGO IL 60610

In re Patent No. D533556	:	
Issue Date: 12/12/2006	:	
Application No. 29/208,280	:	ON PETITION
Filed: 06/24/2004	:	
Attorney Docket No. 9353/250	:	

This is a decision on the petition filed April 24, 2007, which is being treated as a request under 37 CFR 3.81(b)[1] to correct the name of the assignee on the front page of the above-identified patent by way of a Certificate of Correction.

The request is GRANTED.

The $130.00 processing fee will be charged to the Deposit Account, as authorized.

Telephone inquiries concerning this decision may be directed to the undersigned at (571) 272-3211. Inquiries regarding the issuance of a certificate of correction should be directed to the Certificate of Correction Branch at (571) 272-4200.

The Certificates of Correction Branch will be notified of this decision granting the petition under 37 CFR 3.81(b) and directing issuance of the requested Certificate of Correction.

C. T. Donnell

Christina Tartera Donnell
Senior Petitions Attorney
Office of Petitions

---

[1] *See* MPEP 1309, subsection II; and Official Gazette of June 22, 2004.

DATE 8/15/07

APPLICATION NUMBER 29/208,280

DOC CODE WFEE

DOC DATE 8/17/07

DELIVER THE ATTACHED FIFLE/DOCUMENT TO THE TC SCANNING CENTER

CONTRACTOR: THE ATTACHED FILE/DOCUMENT MUST BE INDEXED AND SCANNED INTO IFW WITHIN **8** WORK HOURS; UPLOADING OF THE SCANNED IMAGES SHOULD OCCUR NO LATER THAN **16** WORK HOURS FOLLOWING RECEIPT OF THIS REQUEST

AFTER SCANNING, ORIGINAL DOCUMENTS SHOULD BE BOXED IN ACCORDANCE WITH INSTRUCTIONS

APR 2 4 2007
PATENT & TRADEMARK OFFICE

I hereby certify that this correspondence is being deposited with the United States Postal Service, with sufficient postage, as first class mail in an envelope addressed to the Commissioner for Patents, P.O. Box 1450, Alexandria, VA 22313-1450, on

4/20/2007
(Date of Deposit)

Tadashi Horie, Reg. No. 40,437
Name of applicant, assignee, or Registered Representative

Tadashi H
Signature

4/20/2007
Date of Signature

Our File No. 9353-250

IN THE UNITED STATES PATENT AND TRADEMARK OFFICE

In re Application of:

Hiroyuki Yamada et al.

Patent No.: D 533,556 S

Issue Date: December 12, 2006

Serial No.: 29/208,280

Filing Date: June 24, 2004

For: IC MEMORY CARD

Examiner: Melanie H. Tung

Art Unit: 2911

04/27/2007 CKHLOK 00000010 231925 D533556
01 FC:1464 130.00 DA

REQUEST FOR CERTIFICATE OF CORRECTION

Commissioner for Patents
P.O. Box 1450
Alexandria, VA 22313-1450
Attn: Certificate of Corrections Branch

Sir:

Please issue a Certificate of Correction for the above-identified patent to correct the errors listed on the accompanying PTO Form 1050. This request is being made pursuant to 35 U.S.C. § 254 and 35 U.S.C. § 255, since the errors comprise minor or typographical errors by the applicants or the PTO.

04/25/2007 WABDELR1 00000038 D533556
01 FC:1811 100.00 OP

APR 2 6 2007

04/24/2007 WABDELR1 00000069 533566
01 FC:1811 100.00 OP

An issuance of a certificate of correction to state the names of the assignees is respectfully requested under 37 CFR 1.323. The above-identified patent lists Matsushita Electric Industrial Co., Ltd. as the sole assignee of the patent. However, in addition to Matsushita Electric Industrial Co., Ltd., Kabushiki Kaisha Toshiba and SanDisk Corporation should be listed as assignees. It is acknowledged that the issue fee transmittal submitted on October 4, 2005 lists only Matsushita Electric Industrial Co., Ltd. This error is clerical in nature and attributed to Applicants' mistake.

The assignment was submitted for recordation as set forth in 37 CFR 3.11 before issuance of the above patent. The above-identified patent issued to design patent application No. 29/208,280, which is a division of application No. 29/169,127. For the patent application, application No. 29/169,127, an assignment which correctly lists the above three assignees was submitted and recorded at Reel 14501, Frames 74-78. The application transmittal for application No. 29/208,280 so stated. A copy of the application transmittal is attached to this request.

Enclosed herewith is a check for $100.00 to cover the cost of applicants' errors. The Commissioner is hereby authorized to charge any additional fees required to Deposit Account No. 23-1925. A duplicate copy of this sheet is enclosed.

Respectfully submitted,

Tadashi Horie
Registration No. 40,437
Attorney for Applicants

BRINKS HOFER GILSON & LIONE
P.O. Box 10395
Chicago, Illinois 60610
(312) 321-4200

APR 2 6 2006

UNITED STATES PATENT AND TRADEMARK OFFICE

COMMISSIONER FOR PATENTS
UNITED STATES PATENT AND TRADEMARK OFFICE
P.O. BOX 1450
ALEXANDRIA, VA 22313-1450
www.uspto.gov

MCDERMOTT WILL & EMERY LLP
600 13TH STREET, N.W.
WASHINGTON DC 20005-3096

COPY MAILED

JUN 25 2007

OFFICE OF PETITIONS
ON PETITION

In re Patent No. D521522 :
Issue Date: May 23, 2006 :
Application No. 29/208,303 :
Filed: June 24, 2004 :
Attorney Docket No. 03356/0200409-US0 :

This is a decision on the petition filed March 21, 2007, which is being treated as a request under 37 CFR 3.81(b)[1] to correct the name of the assignee on the front page of the above-identified patent by way of a Certificate of Correction.

The request is **GRANTED**.

Telephone inquiries concerning this decision may be directed to the undersigned at (571) 272-3205. Inquiries regarding the issuance of a certificate of correction should be directed to the Certificate of Correction Branch at (571) 272-4200.

The Certificates of Correction Branch will be notified of this decision granting the petition under 37 CFR 3.81(b) and directing issuance of the requested Certificate of Correction.

Alesia M. Brown
Petitions Attorney
Office of Petitions

[1] *See* MPEP 1309, subsection II; and Official Gazette of June 22, 2004.

UNITED STATES PATENT AND TRADEMARK OFFICE

Commissioner for Patents
United States Patent and Trademark Office
P.O. Box 1450
Alexandria, VA 22313-1450
www.uspto.gov

DARBY & DARBY P.C.
P. O. BOX 5257
NEW YORK NY 10150-5257

COPY MAILED

DEC 13 2005

OFFICE OF PETITIONS

In re application of
Marlon Hernandez et al.
Application No. 29/208,306
Filed: June 24, 2004
Attorney Docket Number: 03356/0200410-US0

ON PETITION

This is a decision on the petition, filed October 7, 2005, under 37 CFR 1.183, which is being treated as a request under 37 CFR 3.81(b)[1] to correct the assignee's name on the front of the Patent. The petition also seeks alternative relief under 37 CFR 1.47(a).

The petition under 37 CFR 3.81 is **DISMISSED**.
The petition under 37 CFR 1.47 is **DISMISSED as involving moot issues**.

Petitioner states that the correct assignee's name is Cellco Partnership d/b/a Verizon Wireless and that the incorrect assignee's name was unintentionally included on the Fee(s) Transmittal form PTOL-85(b) at the time of payment of the issue fee. Accordingly, petitioner requests that upon issuance the correct assignee be indicated on the front page of the Letters Patent..

37 CFR 3.81(b), effective June 25, 2004, reads:

> *After payment of the issue fee:* Any request for issuance of an application in the name of the assignee submitted after the date of payment of the issue fee, and any request for a patent to be corrected to state the name of the assignee, must state that the assignment was submitted for recordation as set forth in § 3.11 before issuance of the patent, and must include a request for a certificate of correction under § 1.323 of this chapter (accompanied by the fee set forth in § 1.20(a) and the processing fee set forth in § 1.17(i) of this chapter.

It is noted that when a request to issue a patent to an assignee is filed after payment of the issue fee, a certificate of correction must be submitted as there is no time to process these requests before a patent is issued. See 69 Fed. Reg. 29865 (May 26, 2004).

The instant petition was not submitted with a request for a certificate of correction (and fee) as required by 3.81(b).

Office assignment records reflect that Verizon Wireless is the assignee of record and petitioner argues that they have been unsuccessful in their attempts to have the inventors sign the corrected assignment and alternatively, seek relief under 37 CFR 1.47(a).

---

[1] *See* Official Gazette of June 22, 2004

37 CFR 1.47 (and a petition thereunder) is only applicable to the initial filing, and PTO acceptance, of an application wherein one or more of the named inventors refuses to sign, or cannot be located to sign, the oath or declaration filed under 37 CFR 1.63. Where, as here, all the named inventors have executed the original oath or declaration under 37 CFR 1.63, 37 CFR 1.47 has no relevance to the application and to petitioner's efforts to have the inventors sign a corrected copy of the assignment. See MPEP 409.03.

Inquiries concerning this decision should be directed to the undersigned at (571) 272-3212.

Patricia Faison-Ball

Patricia Faison-Ball
Senior Petitions Attorney
Office of Petitions

UNITED STATES PATENT AND TRADEMARK OFFICE

Commissioner for Patents
United States Patent and Trademark Office
P.O. Box 1450
Alexandria, VA 22313-1450
www.uspto.gov

MCDERMOTT WILL & EMERY LLP
600 13TH STREET, N.W.
WASHINGTON DC 20005-3096

COPY MAILED
MAY 2 3 2008
OFFICE OF PETITIONS

In re Patent No. D521523

Issue Date: May 23, 2006

Application No. 29/208,309

Filed: June 24, 2004

Attorney Docket No. **03356/0200413-US0**

ON PETITION

This is a decision on the petition under 37 CFR 1.83 to waive the requirements of 37 CFR 3.81 filed June 30, 2006, which is being treated as a request under 37 CFR 3.81(b)[1] to correct the assignee data on the front page of the above-identified patent by way of Certificate of Correction.

The request is **granted**.

Telephone inquiries concerning this matter may be directed to the undersigned at (571)272-3222. Any questions concerning the issuance of the Certificate of Correction should be directed to the Certificate of Correction Branch at (703) 305-8309.

The file is being forwarded to the Certificate of Correction Branch for issuance of the requested Certificate of Correction.

Kenya A. McLaughlin
Petitions Attorney
Office of Petitions

[1] See *Official Gazette* of June 22, 2004.

UNITED STATES PATENT AND TRADEMARK OFFICE

Commissioner for Patents
United States Patent and Trademark Office
P.O. Box 1450
Alexandria, VA 22313-1450
www.uspto.gov

July 24, 2006

FILE COPY

Patent No. : D,523,020 S
Ser. No. : 29/208322
Inventor(s) : Hernandez, et al.
Issued : June 13, 2006
Title : **ICON FOR THE DISPLAY SCREEN OF A CELLULARY COMMUNICATIVE ELECTRONIC DEVICE**
Docket No. : **03356/0200186-US0**

Re: Request for Certificate of Correction

Consideration has been given your request for the issuance of a certificate of correction for the above-identified patent under the provisions of Rule(s) 1.322 and/or 1.323.

Assignees' names and addresses (assignment data) printed in a patent, are based *solely* on information supplied in the appropriate space for identifying the assignment data, i.e., item 3 of the Issue Fee Transmittal Form PTOL-85B. Granting of a request under 37 CFR 3.81(b) is required to correct applicant's error providing ***incorrect or erroneous*** assignment data, *before* issuance of a Certificate of Correction, under 37 CFR 1.323 *(see Manual of Patent Examining Procedures (M.P.E.P) Chp.1400, sect. 1481).* This procedure is required *at any time after the issue fee is paid*, including after issuance of the patent.

In view of the foregoing, your request, in this mater, is hereby denied.

A request to correct the Assignee under 37 CFR 3.81(b) should include:

A. **the processing fee set forth in 37 CFR 1.117(h) (currently $130);**
B. a statement that the failure to include the correct assignee name on the PTOL-85B was inadvertent; and
C. a copy of the Notice of Recordation of Assignment Document, reflecting the reel and frame number where the assignment(s) is recorded and/or reflecting proof of *the date* the assignment was submitted for recordation.

In the Request, Applicant(s) may request that the file be forwarded to Certificates of Correction Branch, for issuance of a Certificate of Correction, if the Request is granted.

Any request under 37 CFR 3.81(b) should be directed to the following address or facsimile number:

By mail: Mail Stop PETITIONS
Commissioner for Patents
Post Office Box 1450
Alexandria, VA 22313-1450

By hand: Customer Service Window
Mail Stop Petitions
Randolph Building
401 Dulany Street
Alexandria, VA 22314

By fax: (703) 872-9306
ATTN: Office of Petitions

If a fee (currently $100) was previously submitted for consideration of a Request for Certificate of Correction, under CFR 1.323, to correct assignment data, , no additional fee is required.

Elisha Evans
For Cecelia Newman
Decisions & Certificates
of Correction Branch
(703) 308-9390 ext. 110 or (703) 308-8309

DARBY & DARBY P.C.
P. O. BOX 5257
NEW YORK NY 10150-5257

UNITED STATES PATENT AND TRADEMARK OFFICE

Commissioner for Patents
United States Patent and Trademark Office
P.O. Box 1450
Alexandria, VA 22313-1450
www.uspto.gov

DARBY & DARBY P.C.
P. O. BOX 5257
NEW YORK NY 10150-5257

COPY MAILED
FEB 06 2007
OFFICE OF PETITIONS

In re Patent No. D523020 :
Issue Date: June 13, 2006 :
Application No. 29/208,322 : ON PETITION
Filed: June 24, 2004 :
Attorney Docket No. 03356/0200186-US0

This is a decision on the petition filed July 19, 2006, which is being treated as a request under 37 CFR 3.81(b)[1] to correct the assignee on the front page of the above-identified patent by way of a Certificate of Correction.

The request is **granted**.

Telephone inquiries concerning this matter may be directed to the undersigned at (571) 272-3222. Any questions concerning the issuance of the Certificate of Correction should be directed to the Certificate of Correction Branch at (703) 305-8309.

The file is being forwarded to the Certificate of Correction Branch for issuance of the requested Certificate of Correction.

Kenya A. McLaughlin
Petitions Attorney
Office of Petitions

[1] See *Official Gazette* of June 22, 2004.

SPE RESPONSE FOR CERTIFICATE OF CORRECTION

Paper No.: ____

DATE : 4-2-07

TO SPE OF : ART UNIT 4700

SUBJECT : Request for Certificate of Correction on Patent No.: D527,013 S (29/208,324

A response is requested with respect to the accompanying request for a certificate of correction.

Please complete this form and return with file, within 7 days to:
Certificates of Correction Branch - PK 3-915
Palm location **7580** - Tel. No. 305-8309

With respect to the change(s) requested, correcting Office and/or Applicant's errors, should the patent read as shown in the certificate of correction? No new matter should be introduced, nor should the scope or meaning of the claims be changed.

Should request be granted? Applicant wants to know the status. This IFW has been in pet. off since 9-6-06

Thank You For Your Assistance

E. James
Certificates of Correction Branch

Thanks

The request for issuing the above-identified correction(s) is hereby:
Note your decision on the appropriate box.

- ☐ **Approved** — All changes apply.
- ☐ **Approved in Part** — Specify below which changes do not apply.
- ☐ **Denied** — State the reasons for denial below.

Comments:

SPE **Art Unit**

UNITED STATES PATENT AND TRADEMARK OFFICE

COMMISSIONER FOR PATENTS
UNITED STATES PATENT AND TRADEMARK OFFICE
P.O. BOX 1450
ALEXANDRIA, VA 22313-1450
www.uspto.gov

MCDERMOTT WILL & EMERY LLP
600 13TH STREET, N.W.
WASHINGTON, DC 20005-3096

COPY MAILED

JUN 29 2007

OFFICE OF PETITIONS

In re Patent No. D527013	:	
Issue Date: August 22, 2006	:	
Application No. 29/208,324	:	ON PETITION
Filed: June 24, 2004	:	
Attorney Docket No. 03356/0200192-US0	:	

This is a decision on the petition filed September 6, 2006, which is being treated as a request under 37 CFR 3.81(b)[1] to correct the name of the assignee on the front page of the above-identified patent by way of a Certificate of Correction.

The request is **GRANTED**.

Telephone inquiries concerning this decision may be directed to the undersigned at (571) 272-3204. Inquiries regarding the issuance of a certificate of correction should be directed to the Certificate of Correction Branch at (571) 272-4200.

The Certificates of Correction Branch will be notified of this decision granting the petition under 37 CFR 3.81(b) and directing issuance of the requested Certificate of Correction.

Sherry D. Brinkley
Petitions Examiner
Office of Petitions

[1] *See* MPEP 1309, subsection II; and Official Gazette of June 22, 2004.

UNITED STATES PATENT AND TRADEMARK OFFICE

Commissioner for Patents
United States Patent and Trademark Office
P.O. Box 1450
Alexandria, VA 22313-1450
www.uspto.gov

SEP 17 2004

Stevens, Davis, Miller & Mosher, LLP
Suite 850
1615 L Street, NW
Washington DC 20036-5622

In re Application of	:	
Darrel Ralph	:	
Serial No.: 29/208,375	:	DECISION ON
Filed: June 29, 2004	:	PETITON TO MAKE SPECIAL
For: Folding Knife	:	

This is in response to applicants' petition filed August 19, 2004, to make the above-identified application special under the provisions of 37 CFR 1.102(d), based on infringement.

Applicant has satisfied the provisions set forth in M.P.E.P. 708.02, II. Therefore the petition is **GRANTED**.

The application will be forwarded to the examiner for action on the merits commensurate with this decision.

Should there be any questions with regard to this letter please contact John Kittle by letter addressed to the Director, Technology Center 3700/2900, P.O. Box 1450 Alexandria, VA 22313-1450 or by telephone at (703) 308-0873 or by facsimile transmission at (703) 308-3139.

John E. Kittle

John E. Kittle
Director
Technology Center 3700/2900

UNITED STATES PATENT AND TRADEMARK OFFICE

Commissioner for Patents
United States Patent and Trademark Office
P.O. Box 1450
Alexandria, VA 22313-1450
www.uspto.gov

PATENTTM.US
P. O. BOX 82788
PORTLAND OR 97282-0788

COPY MAILED

OCT 30 2006

OFFICE OF PETITIONS

In re Application of :
Janky :
Application No. 29/208,416 :
Filed: June 28, 2004 :
Attorney Docket No. 0739 US :
For: NETWORK CABLE QUALIFICATION INSTRUMENT

ON PETITION

This is a decision on the petition under 37 CFR 1.181, filed August 18, 2006, to withdraw the holding of abandonment in the above-identified application.

The petition under 37 CFR 1.181 is **GRANTED**.

The Office contended that the above-identified application became abandoned for failure to submit the issue fee and publication fee in response to the March 7, 2006 Notice of Allowance and Fee(s) Due, which set a three month non-extendable period for reply. It is noted that applicant did not submit corrected drawings within three months of the mail date of the March 7, 2006 Notice of Allowability, either. No reply being received to either Notice, the Office contended that this application became abandoned on June 8, 2006. A Notice of Abandonment was mailed on July 20, 2006.

Petitioner alleges that the March 7, 2006 Notice of Allowance and Fee(s) Due was not received. It is assumed that petitioner intends to assert that the March 7, 2006 Notice of Allowability was not received, either.

The showing required to establish non-receipt of an Office communication must include:

1. A statement from the practitioner stating that the Office communication was not received by the practitioner and attesting to the fact that a search of the file jacket and docket records indicates that the Office communication was not received.
2. A copy of the docket record where the non-received Office communication would have been entered had it been received and docketed must be attached to and referenced in practitioner's statement.[1]

[1] See notice entitled "Withdrawing the Holding of Abandonment When Office Actions Are Not Received," 1156 O.G. 53 (November 16, 1993).

Petitioner has submitted a copy of the docket record where the requirements would have been entered had the March 7, 2006 Notices been received. In addition, practitioner referenced the docket record in the petition and stated that a review of the file jacket and docket records for the March 7, 2006 Notices was fruitless.

Petitioner has established non-receipt. The petition is **granted**, the Notice of Abandonment is vacated, and the holding of abandonment is withdrawn.

After the mailing of this decision, the application will be returned to Technology Center AU 2915 for the re-mailing of the March 7, 2006 Notice of Allowance and Fee(s) Due and Notice of Allowability with a new period set for reply.

Telephone inquiries may be directed to the undersigned at (571) 272-3230.

Shirene Willis Brantley

Shirene Willis Brantley
Senior Petitions Attorney
Office of Petitions

OIPE JC26
JAN 0 4 2005
PATENT & TRADEMARK OFFICE

FILE COPY

DESIGN

IN THE UNITED STATES PATENT AND TRADEMARK OFFICE

In re Application of:	)	
Selya Ohta et al.	)	
Serial No.: 29/208,444	)	Group Art Unit: ~~2913~~ 2911
Filed: June 30, 2004	)	Examiner: TBA Nunn
For: **FINGERPRINT SCANNING DEVICE**	)	
	)	Attorney Docket No.: 013797.00448

PETITION TO MAKE SPECIAL UNDER 37 C.F.R. §1.102(d)
AND INFORMATION DISCLOSURE STATEMENT

PETITION GRANTED
William Krynski
Special Program Examiner
TC 1700
2-10-05

Mail Stop Design
Commissioner for Patents
P. O. Box 1450
Alexandria, VA 22313-1450

Dear Sir:

Applicant hereby petitions the Commissioner to make this application special under 37 C.F.R. §1.102(d) and under the guidelines of M.P.E.P. §708.02(VIII).

A pre-examination search was conducted at the U.S. Patent and Trademark Office by Mr. Tuan Nguyen, a registered patent agent and a professional searcher with PatPro, Suite 309A, Crystal Plaza One, 2001 Jefferson Davis Highway, Arlington, VA 22202. The search was conducted in class D10 in the following subclasses: 104, 121; in class D14 in the following subclasses: 383, 384, 387, 402, 405, 406, 407, 408, 409, 410, 412, 426, 427, 432 and 454; in class 340 in the following subclasses: 5.53; in class 345 in the following subclasses: 163, 170; in class 382 in the following subclasses: 124, 126. Primary Examiner Freda Nunn of Group 2900 was consulted for the searches at the U.S. Patent and Trademark Office.

01/05/2005 JBALINAN 00000091 190733 29208444
01 FC:1464 130.00 DA

UNITED STATES PATENT AND TRADEMARK OFFICE

Commissioner for Patents
United States Patent and Trademark Office
P.O. Box 1450
Alexandria, VA 22313-1450
www.uspto.gov

SEP 28 2004

BANNER & WITCOFF
1001 G STREET N W
SUITE 1100
WASHINGTON DC 20001

In re Application of	:	
Jean Francois Fullum	:	
Serial No.: 29/208,445	:	DECISION ON PETITION
Filed: June 30, 2004	:	
For: Portion Of A Shoe Upper	:	

This is in response to the petition applicant filed on August 31, 2004 to make the above-identified application special under the provisions of 37 CFR 1.102(d).

Applicant has satisfied the provisions set forth in M.P.E.P. 708.02, VIII, thus the petition is **GRANTED**.

The application will be forwarded to the examiner for action on the merits commensurate with this decision.

Should there be any questions with regard to this letter please contact John Kittle by letter addressed to the Director, Technology Center 3700/2900, P.O. Box 1450 Alexandria, VA 22313-1450, or by telephone at (703) 308-0873 or by facsimile transmission at (703) 308-3139.

John E. Kittle

John E. Kittle
Director
Technology Center 3700/2900

SPE RESPONSE FOR CERTIFICATE OF CORRECTION

Paper No.: _____

DATE : 06-20-06

TO SPE OF : ART UNIT 2914

SUBJECT : Request for Certificate of Correction for Appl. No.: **29/208456** Patent No.: **D518623**

Please respond to this request for a certificate of correction within 7 days.

Please review the requested changes/corrections as shown in the **COCIN** document(s) in the IFW application image. No new matter should be introduced, nor should the scope or meaning of the claims be changed.

Please complete the response (see below) and forward the completed response to scanning using document code **COCX**.

Angela Green
Certificates of Correction Branch
703.308.9380 ext. 123

Thank You For Your Assistance

The request for issuing the above-identified correction(s) is hereby:
Note your decision on the appropriate box.

- ☒ **Approved** — **All** changes apply.
- ☐ **Approved in Part** — Specify below which changes **do not** apply.
- ☐ **Denied** — State the reasons for denial below.

Comments: _____

IAN SIMMONS
SUPERVISORY PATENT EXAMINER

SPE — 2916 **Art Unit**

UNITED STATES PATENT AND TRADEMARK OFFICE

Commissioner for Patents
United States Patent and Trademark Office
P.O. Box 1450
Alexandria, VA 22313-1450
www.uspto.gov

AUG 24 2004

TRASK BRITT
P.O. BOX 2550
SALT LAKE CITY UT 84110

In re Application of	:	
Clifford Bruce Gerber	:	
Serial No.: 29/208,530	:	DECISION ON PETITION
Filed: June 30, 2004	:	
For: Side Element Of A Shoe Upper	:	

This is in response to the petition applicant filed on June 30, 2004 to make the above-identified application special under the provisions of 37 CFR 1.102(d).

Applicant has satisfied the provisions set forth in M.P.E.P. 708.02, VIII, thus the petition is **GRANTED**.

The application will be forwarded to the examiner for action on the merits commensurate with this decision.

Should there be any questions with regard to this letter please contact John Kittle by letter addressed to the Director, Technology Center 3700/2900, P.O. Box 1450 Alexandria, VA 22313-1450, or by telephone at (703) 308-0873 or by facsimile transmission at (703) 308-3139.

John E. Kittle
Director
Technology Center 3700/2900

UNITED STATES PATENT AND TRADEMARK OFFICE

Commissioner for Patents
United States Patent and Trademark Office
P.O. Box 1450
Alexandria, VA 22313-1450
www.uspto.gov

AUG 2 4 2004

TRASK BRITT
P.O. BOX 2550
SALT LAKE CITY UT 84110

In re Application of	:	
Clifford Bruce Gerber	:	
Serial No.: 29/208,531	:	DECISION ON PETITION
Filed: June 30, 2004	:	
For: Side Element Of A Shoe Upper	:	

This is in response to the petition applicant filed on June 30, 2004 to make the above-identified application special under the provisions of 37 CFR 1.102(d).

Applicant has satisfied the provisions set forth in M.P.E.P. 708.02, VIII, thus the petition is **GRANTED**.

The application will be forwarded to the examiner for action on the merits commensurate with this decision.

Should there be any questions with regard to this letter please contact John Kittle by letter addressed to the Director, Technology Center 3700/2900, P.O. Box 1450 Alexandria, VA 22313-1450, or by telephone at (703) 308-0873 or by facsimile transmission at (703) 308-3139.

John E. Kittle

John E. Kittle
Director
Technology Center 3700/2900