UNITED STATES PATENT AND TRADEMARK OFFICE

Commissioner for Patents
United States Patent and Trademark Office
P.O. Box 1450
Alexandria, VA 22313-1450
www.uspto.gov

KINNEY & LANGE, P.A.
THE KINNEY & LANGE BUILDING
312 SOUTH THIRD STREET
MINNEAPOLIS MN 55415-1002

COPY MAILED

DEC 14 2007

OFFICE OF PETITIONS

In re Application of	:	
Stephen Stripe	:	
Application No. 29/239,747	:	DECISION GRANTING PETITION
Filed: October 4, 2005	:	UNDER 37 CFR 1.137(b)
Attorney Docket No. U66.12-0012	:	

This is a decision on the petition under 37 CFR 1.137(b), filed June 13, 2007, to revive the above-identified application.

The petition is **GRANTED**.

The petition satisfies the conditions for revival pursuant to the provisions of 37 CFR 1.137(b) in that (1) the reply in the form of the issue fee and terminal disclaimer; (2) the petition fee; and (3) the required statement of unintentional delay have been received. Accordingly, the reply to the Notice of Allowance of September 7, 2006, is accepted as having been unintentionally delayed.

Telephone inquiries concerning this decision should be directed to the undersigned at (571) 272-3208.

This application is being referred to Patent Publication.

Karen Creasy
Petitions Examiner
Office of Petitions

PTO/SB/27 (05-03)
Approved for use through 04/30/2003. OMB 0651-0031
U.S. Patent and Trademark Office; U.S. DEPARTMENT OF COMMERCE
Under the Paperwork Reduction Act of 1995, no persons are required to respond to a collection of information unless it displays a valid OMB control number.

REQUEST FOR EXPEDITED EXAMINATION OF A DESIGN APPLICATION (37 CFR 1.155)

Application Number	TBD
Filing Date	October 6, 2005
First Named Inventor	Frederick J. Dojan et al.
Title	Portion Of A Shoe Midsole
Atty Docket Number	015127.00513

112949 U.S.PTO
29/230021
100605

HAND DELIVER TO THE DESIGN GROUP DIRECTOR'S OFFICE
-or- ADDRESS TO:
MAIL STOP EXPEDITED DESIGN
COMMISSIONER FOR PATENTS
P.O. Box 1450
Alexandria, VA 22313-1450

This is a request for expedited examination of a design application under 37 CFR 1.155.

NOTE: If the Request made by this form accompanies original application papers, include form PTO/SB/18 "Design Patent Application Transmittal" or its equivalent.

Approved 1-18-06
Jacqueline M. Stone, Director
Technology Center 1700

A preexamination search was conducted. The field of search was:

D2/896, 902, 907, 908, 943, 944, 964, 969, 972, and 977

Related applications: ____

If not previously filed for the above-identified application, the following items required by 37 CFR 1.155 are enclosed:

Formal drawings (see 37 CFR 1.84).

The fee set forth in 37 CFR 1.17(k).

An information disclosure statement in compliance with 37 CFR 1.98.

October 6, 2005
Date

Signature

202-824-3000
Telephone Number

Anthony W. Kandare, Reg. No. 48,830
Typed or printed name

WARNING: Information on this form may become public. Credit card information should not be included on this form. Provide credit card information and authorization on PTO-2038.

This collection of information is required by 37 CFR 1.155. The information is required to obtain or retain a benefit by the public which is to file (and by the USPTO to process) an application. Confidentiality is governed by 35 U.S.C. 122 and 37 CFR 1.14. This collection is estimated to take 6 minutes to complete, including gathering, preparing, and submitting the completed application form to the USPTO. Time will vary depending upon the individual case. Any comments on the amount of time you require to complete this form and/or suggestions for reducing this burden, should be sent to the Chief Information Officer, U.S. Patent and Trademark Office, U.S. Department of Commerce, P.O. Box 1450, Alexandria, VA 22313-1450. DO NOT SEND FEES OR COMPLETED FORMS TO THIS ADDRESS. SEND TO: Mail Stop Expedited Design, Commissioner for Patents, P.O. Box 1450, Alexandria, VA 22313-1450.

If you need assistance in completing the form, call 1-800-PTO-9199 and select option 2.

PTO/SB/27 (05-03)
Approved for use through 04/30/2003. OMB 0651-0031
U.S. Patent and Trademark Office; U.S. DEPARTMENT OF COMMERCE
Under the Paperwork Reduction Act of 1995, no persons are required to respond to a collection of information unless it displays a valid OMB control number.

REQUEST FOR EXPEDITED EXAMINATION OF A DESIGN APPLICATION (37 CFR 1.155)

Application Number	TBD
Filing Date	October 6, 2005
First Named Inventor	Carl A. Jonsson
Title	Portion Of A Shoe Upper
Atty Docket Number	015127.00573

12849 U.S.PTO
29/239822
100605

HAND DELIVER TO THE DESIGN GROUP DIRECTOR'S OFFICE
-or- ADDRESS TO:
MAIL STOP EXPEDITED DESIGN
COMMISSIONER FOR PATENTS
P.O. Box 1450
Alexandria, VA 22313-1450

Approved 10/17/05
Jacqueline M. Stone
Jacqueline M. Stone, Director
Technology Center 1700

This is a request for expedited examination of a design application under 37 CFR 1.155.

NOTE: If the Request made by this form accompanies original application papers, include form PTO/SB/18 "Design Patent Application Transmittal" or its equivalent.

A preexamination search was conducted. The field of search was:

D2/896, 902, 907, 908, 943, 944, 945, 946, 969, 972, 973, and 974

Related applications: _____

If not previously filed for the above-identified application, the following items required by 37 CFR 1.155 are enclosed:

Formal drawings (see 37 CFR 1.84).

The fee set forth in 37 CFR 1.17(k).

An information disclosure statement in compliance with 37 CFR 1.98.

October 6, 2005
Date

Signature

202-824-3000
Telephone Number

Anthony W. Kandare, Reg. No. 48,830
Typed or printed name

WARNING: Information on this form may become public. Credit card information should not be included on this form. Provide credit card information and authorization on PTO-2038.

This collection of information is required by 37 CFR 1.155. The information is required to obtain or retain a benefit by the public which is to file (and by the USPTO to process) an application. Confidentiality is governed by 35 U.S.C. 122 and 37 CFR 1.14. This collection is estimated to take 6 minutes to complete, including gathering, preparing, and submitting the completed application form to the USPTO. Time will vary depending upon the individual case. Any comments on the amount of time you require to complete this form and/or suggestions for reducing this burden, should be sent to the Chief Information Officer, U.S. Patent and Trademark Office, U.S. Department of Commerce, P.O. Box 1450, Alexandria, VA 22313-1450. DO NOT SEND FEES OR COMPLETED FORMS TO THIS ADDRESS. SEND TO: Mail Stop Expedited Design, Commissioner for Patents, P.O. Box 1450, Alexandria, VA 22313-1450.

If you need assistance in completing the form, call 1-800-PTO-9199 and select option 2.

10/07/2005 NNGUYEN1 00000020 29239822

04 FC:1802 900.00 DA

PTO/SB/27 (05-03)
Approved for use through 04/30/2003. OMB 0651-0031
U.S. Patent and Trademark Office; U.S. DEPARTMENT OF COMMERCE
Under the Paperwork Reduction Act of 1995, no persons are required to respond to a collection of information unless it displays a valid OMB control number.

REQUEST FOR EXPEDITED EXAMINATION OF A DESIGN APPLICATION (37 CFR 1.155)

Application Number	TBD
Filing Date	October 6, 2005
First Named Inventor	Jean-Francois Fullum
Title	Portion Of A Shoe Upper
Atty Docket Number	015127.00555

112949 U.S.PTO
29/239823
100605

HAND DELIVER TO THE DESIGN GROUP DIRECTOR'S OFFICE
-or- ADDRESS TO:
MAIL STOP EXPEDITED DESIGN
COMMISSIONER FOR PATENTS
P.O. Box 1450
Alexandria, VA 22313-1450

Approved
Jacqueline M. Stone
Jacqueline M. Stone, Director
Technology Center 1700
10/17/05

This is a request for expedited examination of a design application under 37 CFR 1.155.

NOTE: If the Request made by this form accompanies original application papers, include form PTO/SB/18 "Design Patent Application Transmittal" or its equivalent.

A preexamination search was conducted. The field of search was:

D2/896, 902, 907, 908, 943, 944, 945, 946, 969, 972, 973, and 974

Related applications: _____

If not previously filed for the above-identified application, the following items required by 37 CFR 1.155 are enclosed:

Formal drawings (see 37 CFR 1.84).

The fee set forth in 37 CFR 1.17(k).

An information disclosure statement in compliance with 37 CFR 1.98.

October 6, 2005
Date

Signature

202-824-3000
Telephone Number

Anthony W. Kandare, Reg. No. 48,830
Typed or printed name

WARNING: Information on this form may become public. Credit card information should not be included on this form. Provide credit card information and authorization on PTO-2038.

This collection of information is required by 37 CFR 1.155. The information is required to obtain or retain a benefit by the public which is to file (and by the USPTO to process) an application. Confidentiality is governed by 35 U.S.C. 122 and 37 CFR 1.14. This collection is estimated to take 6 minutes to complete, including gathering, preparing, and submitting the completed application form to the USPTO. Time will vary depending upon the individual case. Any comments on the amount of time you require to complete this form and/or suggestions for reducing this burden, should be sent to the Chief Information Officer, U.S. Patent and Trademark Office, U.S. Department of Commerce, P.O. Box 1450, Alexandria, VA 22313-1450. DO NOT SEND FEES OR COMPLETED FORMS TO THIS ADDRESS. SEND TO: Mail Stop Expedited Design, Commissioner for Patents, P.O. Box 1450, Alexandria, VA 22313-1450.

If you need assistance in completing the form, call 1-800-PTO-9199 and select option 2.

10/07/2005 HNGUYEN1 00000019 190733 29239823
04 FC:1802 900.00 DA

UNITED STATES PATENT AND TRADEMARK OFFICE

COMMISSIONER FOR PATENTS
UNITED STATES PATENT AND TRADEMARK OFFICE
P.O. BOX 1450
ALEXANDRIA, VA 22313-1450
www.uspto.gov

ALIX YALE & RISTAS LLP
750 MAIN STREET
SUITE 1400
HARTFORD, CT 06103

COPY MAILED

NOV 29 2006

OFFICE OF PETITIONS

In re Patent No. D525,887	:	NOTICE
Issued: August 1, 2006	:	
Application No. 29/239,830	:	
Filed: October 4, 2005	:	
Patentee: Hughes M. Sanoner	:	

This is a notice regarding your request for acceptance of a fee deficiency submission under 37 CFR 1.28. On September 1, 1998, the Court of Appeals for the Federal Circuit held that 37 CFR 1.28(c) is the sole provision governing the time for correction of the erroneous payment of the issue fee as a small entity. **See DH Technology v. Synergystex International, Inc. 154 F.3d 1333, 47 USPQ2d 1865 (Fed. Cir. Sept. 1, 1998).**

The Office no longer investigates or rejects original or reissue applications under 37 CFR 1.56. **1098 Off. Gaz. Pat. Office 502 (January 3, 1989)**. Therefore, nothing in this Notice is intended to imply that an investigation was done.

Your fee deficiency submission under 37 CFR 1.28 is hereby **ACCEPTED**.

This application no longer qualifies for small entity status. Accordingly, all future fees must be paid at the large entity rate.

Inquiries related to this communication should be directed to the Office of Petitions Staff at (571) 272-3282.

Sherry D. Brinkley
Petitions Examiner
Office of Petitions

UNITED STATES PATENT AND TRADEMARK OFFICE

Commissioner for Patents
United States Patent and Trademark Office
P.O. Box 1450
Alexandria, VA 22313-1450
www.uspto.gov

BUSH INTELLECTUAL PROPERTY LAW GROUP, LLC
P.O. BOX 381146
BIRMINGHAM AL 35238

COPY MAILED

JAN 29 2008

OFFICE OF PETITIONS

In re Application of
Donald L. Cash Sr.
Application No. 29/239,892
Filed: October 5, 2005
Attorney Docket No. Cash 1

DECISION ON PETITION

This is a decision on the petition under the unintentional provisions of 37 CFR 1.137(b), filed March 27, 2007, to revive the above-identified application.

The petition is **GRANTED**.

This application became abandoned for failure to timely pay the issue before January 31, 2007, as required by the Notice of Allowance and Fee(s) Due, mailed October 31, 2006. Accordingly, the date of abandonment of this application is February 1, 2007. The Notice of Abandonment March 20, 2007.

The petition satisfies the requirements of 37 CFR 1.137(b) in that petitioner has supplied (1) the reply in the form of payment of the issue fee of $400, (2) the petition fee of $750; and (3) a proper statement of unintentional delay.

Telephone inquiries concerning this decision should be directed to Terri Williams at (571) 272-2991.

This application is being referred to Publishing Division for processing into a patent.

Liana Walsh
Petitions Examiner
Office of Petitions

PTO/SB/27 (09-04)
Approved for use through 07/31/2006. OMB 0651-0031
U.S. Patent and Trademark Office: U.S. DEPARTMENT OF COMMERCE
Under the Paperwork Reduction Act of 1995, no persons are required to respond to a collection of information unless it displays a valid OMB control number.

REQUEST FOR EXPEDITED EXAMINATION OF A DESIGN APPLICATION (37 CFR 1.155)

Application Number	TBA
Filing Date	October 7, 2005
First Named Inventor	Charles Cummins
Title	User Interface For A Portion Of A Display Screen
Atty Docket Number	013797.01717

ADDRESS TO:
MAIL STOP EXPEDITED DESIGN
COMMISSIONER FOR PATENTS
P.O. Box 1450
Alexandria, VA 22313-1450

Approved 10/17/05
Jacqueline M. Stone
Jacqueline M. Stone, Director
Technology Center 1700

29723968 113241 U.S.PTO
100705

This is a request for expedited examination of a design application under 37 CFR 1.155.

NOTE: If the Request made by this form accompanies original application papers, include form PTO/SB/18 "Design Patent Application Transmittal" or its equivalent.

A preexamination search was conducted. The field of search was:

Class D14 (subclasses 485, 486, 487, 488, 489, 490, 491, 492, 493, 494, 495); Class D18 (subclasses 24, 25, 26, 27, 28, 29, 30, 31, 32, 33); Class D19 (subclasses 6, 7); Class D20 (subclasses 11, 18); Class D21 (subclasses 324, 325, 326, 327, 328, 329, 330, 331, 332, 333); Class 345 (subclasses 683, 902), Class 715 (subclasses 700-726, 762-876, 973-977)

Related applications: 29/237,949 filed 9/9/05

If not previously filed for the above-identified application, the following items required by 37 CFR 1.155 are enclosed:
Formal drawings (see 37 CFR 1.84).
The fee set forth in 37 CFR 1.17(k).
An information disclosure statement in compliance with 37 CFR 1.98.

Signature — October 7, 2005 (Date)

Ross A. Dannenberg (Typed or printed name) — 49,024 (Registration Number, if applicable)

(202) 824-3000
Telephone Number

WARNING: Information on this form may become public. Credit card information should not be included on this form. Provide credit card information and authorization on PTO-2038.

This collection of information is required by 37 CFR 1.155. The information is required to obtain or retain a benefit by the public which is to file (and by the USPTO to process) an application. Confidentiality is governed by 35 U.S.C. 122 and 37 CFR 1.11 and 1.14. This collection is estimated to take 6 minutes to complete, including gathering, preparing, and submitting the completed application form to the USPTO. Time will vary depending upon the individual case. Any comments on the amount of time you require to complete this form and/or suggestions for reducing this burden, should be sent to the Chief Information Officer, U.S. Patent and Trademark Office, U.S. Department of Commerce, P.O. Box 1450, Alexandria, VA 22313-1450. DO NOT SEND FEES OR COMPLETED FORMS TO THIS ADDRESS. SEND TO: **Mail Stop Expedited Design, Commissioner for Patents, P.O. Box 1450, Alexandria, VA 22313-1450.**
If you need assistance in completing the form, call 1-800-PTO-9199 and select option 2.

10/11/2005 LWONDIM1 00000098 190733 29239968
04 FC:1802 900.00 DA

10/11/2005 LWONDIM1 00000097 190733 29239968
04 FC:1802 900.00 DA

UNITED STATES PATENT AND TRADEMARK OFFICE

Commissioner for Patents
United States Patent and Trademark Office
P.O. Box 1450
Alexandria, VA 22313-1450
www.uspto.gov
DRW Jul-06

EDWARD M. LIVINGSTON, PA
963 TRAIL TERRACE DRIVE
NAPLES FL 34103

COPY MAILED
JUL 28 2006
OFFICE OF PETITIONS

In re Application of	:	
Bryan L.S. Pease	:	
Application No. 29/239,969	:	ON PETITION
Deposited: 6 October, 2005	:	
Atty Docket No. 05-5852	:	

This is a decision in reference to the petition filed on 7 March, 2006, which is treated as a petition under 37 CFR 1.53, requesting that the application be accorded a filing date of 6 October, 2005.

The petition is **DISMISSED**.

The application was deposited on 6 October, 2005, without drawings. Accordingly, on 8 November, 2005, a Notice of Incomplete Nonprovisional Application was mailed, stating that the application was deposited without drawings and that 35 U.S.C. § 113 (first sentence) requires a drawing "where necessary for the understanding of the subject matter sought to be patented."

In response, on 7 March, 2006, petitioner filed the present petition and petition fee.

Petitioner asserts that drawings were among the original application papers filed on 6 October, 2005. Petitioner points to his postcard receipt and the itemized transmittal letter as evidence that drawings were among the application papers filed on 6 October, 2005. Petitioners request that the application be accorded a filing date of 6 October, 2005, with drawings as a part of the original disclosure.

The U.S. Patent and Trademark Office (Office) file is the official record of the papers originally filed in this application. A review of the papers originally filed reveals that no sheets of drawings were among the application papers

filed on 6 October, 2005. An applicant alleging that a paper was filed in the Office and later misplaced has the burden of proving the allegation by a preponderance of the evidence.

The argument and evidence supplied with the petition have been carefully considered, but are not persuasive. The USPTO has a well-established and well-publicized practice of providing a receipt for papers filed in the USPTO to any applicant desiring a receipt. The practice requires that any paper for which a receipt is desired be filed in the USPTO with a self-addressed postcard identifying the paper. A postcard receipt which itemizes and properly identifies the papers which are being filed serves as prima facie evidence of receipt in the USPTO of all the items listed thereon on the date stamped thereon by the USPTO. See section 503, Manual of Patent Examining Procedure (MPEP 503).

Where the records of the Office (e.g. the file of the application) contain any document(s) or fee(s) corresponding to the contents of the correspondence at issue, the Office will rely upon its official record of the contents of such correspondence in the absence of convincing evidence (e.g. a postcard receipt under MPEP 503 containing specific itemization of the document(s) or fee(s) purported to have been filed with the correspondence at issue) that the Office received and misplaced any document(s) or fee(s) that is not among the official records of the Office. If a new application is being filed, all parts of the application being submitted should be separately listed on the postcard, *e.g.*, the number of pages of specification (including written description, claims and abstract) number of claims, number of sheets of drawings, number of pages of oath/declaration. The postcard receipt will not serve as *prima facie* evidence of receipt of any item which is not adequately itemized on the postcard.[1]

Unfortunately, in this case, petitioners' postcard receipt fails to itemize the papers allegedly filed in this application. The postcard receipt does not itemize the number of sheets and figures of drawings filed, or any drawings at all. A postcard receipt will not serve as prima facie evidence of receipt in the USPTO of any items which are not properly itemized and identified. It is also noted that petitioner's postcard contains an Office date stamp of 1 December, 2005. As such, assuming,

[1] MPEP 503.

arguendo, the postcard did itemizing the filing of drawings, it would serve as evidence of receipt of those drawings in the USPTO on 1 December, 2005, not on 6 October, 2005. Furthermore, an application transmittal letter is, at best, only evidence of what was intended to be filed, not evidence of what was actually received or filed in the USPTO.

Moreover, as no copy of the drawings has been provided, the application remains incomplete and cannot be accorded a filing date. Petitioner must supply a copy of the drawings with any renewed petition.

As the Notice correctly stated that no drawings were present on filing, the petition was not necessitated by Office error and the petition fee will not be refunded.

Any request for reconsideration should be filed within **TWO MONTHS** of the date of this decision in order to be considered timely. This time period may not be extended pursuant to 37 CFR 1.136.

Further correspondence with respect to this matter should be addressed as follows:

By mail: Mail Stop Petition
Commissioner for Patents
P.O. Box 1450
Alexandria, VA 22313-1450

By FAX: (571) 273-8300
Attn: Office of Petitions

By hand: Customer Service Window
Mail Stop Petition
Randolph Building
401 Dulany Street
Alexandria, VA 22314

Telephone inquiries specific to this matter should be directed to the undersigned at 571 272-3231.

Douglas I. Wood
Senior Petitions Attorney
Office of Petitions

Commissioner for Patents
United States Patent and Trademark Office
P.O. Box 1450
Alexandria, VA 22313-1450
www.uspto.gov
DIW Oct-06

EDWARD M. LIVINGSTON, PA
963 TRAIL TERRACE DRIVE
NAPLES FL 34103

COPY MAILED
OCT 0 4 2006
OFFICE OF PETITIONS

In re Application of :
Bryan L.S. Pease :
Application No. 29/239,969 : ON PETITION
Filed: 6 October, 2005 :
Atty Docket No. 05-5852 :

This is a decision in reference to the renewed petition filed on 21 August, 2006, which is treated as a petition under 37 CFR 1.53, requesting that the application be accorded a filing date of 6 October, 2005.

The petition is **GRANTED**.

The application was deposited on 6 October, 2005, without drawings. Accordingly, on 8 November, 2005, a Notice of Incomplete Nonprovisional Application was mailed, stating that the application was deposited without drawings and that 35 U.S.C. § 113 (first sentence) requires a drawing "where necessary for the understanding of the subject matter sought to be patented." The petition filed on 7 March, 2006, was dismissed on 28 July, 2006.

In response, on 21 August, 2006, petitioner filed the present renewed petition.

Petitioner again asserts that drawings were among the original application papers filed on 6 October, 2005. Petitioner points to his postcard receipt and the itemized transmittal letter as evidence that drawings were among the application papers filed on 6 October, 2005. Petitioners request that the application be accorded a filing date of 6 October, 2005, with drawings as a part of the original disclosure.

A review of the record reveals that no sheets of drawings received on 6 October, 2005, are located among the application

papers received on that date. However, the evidence is convincing that the application papers deposited on 6 October, 2005, included two (2) sheets of drawings, which were subsequently misplaced in the Office. Therefore, the application, including two (2) sheets of drawings, is entitled to a filing date of 6 October, 2005.

In view of the above, the petition is granted.

The Notice of Incomplete Nonprovisional Application is withdrawn.

As the petition was necessitated by an error on the part of the Office, no petition fee is due. The petition fee will be refunded.

The application will be processed with the copy of the two (2) sheets of drawings supplied on 21 August, 2006, as a part of the original disclosure.

The application is being referred to Initial Patent Examination Division for reprocessing with a filing date of 6 October, 2005, using the application papers filed on that date, and the copy of two (2) sheets of drawings supplied with the present petition.

Telephone inquiries specific to this matter should be directed to the undersigned at 571 272-3231.

D Wood

Douglas I. Wood
Senior Petitions Attorney
Office of Petitions

SPE RESPONSE FOR CERTIFICATE OF CORRECTION

Paper No.: _____

DATE : 7-25-07

TO SPE OF : ART UNIT 2914

SUBJECT : Request for Certificate of Correction for Appl. No.: 29/259985 Patent No.: D545361

Please respond to this request for a certificate of correction within 7 days.

Please review the requested changes/corrections as shown in the **COCIN** document(s) in the IFW application image. No new matter should be introduced, nor should the scope or meaning of the claims be changed.

Please Check Drawings

Please complete the response (see below) and forward the completed response to scanning using document code **COCX**.

Certificates of Correction Branch

703-308-9390 ext. 117

Thank You For Your Assistance

The request for issuing the above-identified correction(s) is hereby:

Note your decision on the appropriate box.

☒ Approved	All changes apply.
☐ Approved in Part	Specify below which changes do not apply.
☐ Denied	State the reasons for denial below.

Comments: _____

SPE 2914 Art Unit

UNITED STATES PATENT AND TRADEMARK OFFICE

Commissioner for Patents
United States Patent and Trademark Office
P.O. Box 1450
Alexandria, VA 22313-1450
www.uspto.gov

COPY MAILED

FEB 19 2008

DAVIS WRIGHT
TREMAINE, LLP/SEATTLE
1201 THIRD AVENUE, SUITE 2200
SEATTLE WA 98101-3045

In re Application of :
Mattigka :
Application No. 29/240,006 : DECISION
Filed: 6 October, 2005 :
Attorney Docket No. 65031-5 :

This is a decision on the petition filed on 12 June, 2007, to revive an application under 37 C.F.R. §1.137(b) as having been abandoned due to unintentional delay.

The Office regrets the delay in addressing the instant matter, however, the petition was presented to the attorneys in the Office of Petitions only at this writing.

The petition as considered under 37 C.F.R. §1.137(b) is **GRANTED**.

BACKGROUND

The record reflects that:

- Petitioner failed to reply timely and properly to the Notice of Allowance/Allowability and Fees Due mailed on 9 March, 2007, with reply due under a non-extendable deadline on or before 11 June, 2007;
- the application went abandoned by operation of law after midnight 11 June, 2007;
- it does not appear that the Office mailed the Notice of Abandonment before the instant petition was filed;

- on 12 June, 2007, Petitioner submitted the instant petition with fee, the reply in the form of fees due and drawings, a terminal disclaimer and fee, and made the statement of unintentional delay;

- the Office mailed the Notice of Abandonment on 16 July, 2007

The availability of applications and application papers online to applicants/practitioners who diligently associate their Customer Number with the respective application(s) now provides an applicant/practitioner on-demand information as to events/transactions in an application. Thus, now if one wishes to know the progress in and/or status of an application or the accuracy of the data therein, one need only look at the file online.

Out of an abundance of caution, Petitioners always should note that those registered to practice *and* all others who make representations before the Office are reminded to inquire into the underlying facts of representations made to the Office and support averments with the appropriate documentation–since all owe to the Office the continuing duty to disclose.[1]

STATUTES, REGULATIONS AND ANALYSIS

Congress has authorized the Commissioner to "revive an application if the delay is shown to the satisfaction of the Commissioner to have been "unavoidable." 35 U.S.C. §133 (1994).[2]

The regulations at 37 C.F.R. §1.137(a) and (b) set forth the requirements for a petitioner to revive a previously unavoidably or unintentionally, respectively, abandoned application under this congressional grant of authority. The language of 35 U.S.C. §133 and 37 C.F.R. §1.137(a) is clear, unambiguous, and without qualification: the delay in tendering the reply to the outstanding Office action, as well as filing the first petition seeking revival, must have been unavoidable for the reply now to be accepted on petition.

Delays in responding properly raise the question whether delays are unavoidable. Where there is a question whether the delay was unavoidable, Petitioners must meet the burden of establishing that the delay was unavoidable within the meaning of 35 U.S.C. §133 and 37 C.F.R. §1.137(a).[3]

And the Petitioner must be diligent in attending to the matter.[4] Failure to do so does not constitute the care required under Pratt, and so cannot satisfy the test for diligence and due care.

---

[1] See supplement of 17 June, 1999. The Patent and Trademark Office is relying on petitioner's duty of candor and good faith and accepting a statement made by Petitioner. See Changes to Patent Practice and Procedure, 62 Fed. Reg. at 53160 and 53178, 1203 Off. Gaz. Pat. Office at 88 and 103 (responses to comments 64 and 109)(applicant obligated under 37 C.F.R. §10.18 to inquire into the underlying facts and circumstances when providing statements to the Patent and Trademark Office).

[2] See: In re Application of G, 11 USPQ2d 1378, 1380 (Comm'r Pats. 1989).

[3] See: *Changes to Patent Practice and Procedure; Final Rule Notice*, 62 *Fed. Reg.* at 53158-59 (October 10, 1997), 1203 *Off. Gaz. Pat. Office* at 86-87 (October 21, 1997).

(By contrast, unintentional delays are those that do not satisfy the very strict statutory and regulatory requirements of unavoidable delay, and also, by definition, are not intentional.[5]))

As to Allegations
of Unintentional Delay

The requirements for a grantable petition under 37 C.F.R. §1.137(b) are the petition and fee, a proper reply, a statement/showing of unintentional delay, and–where appropriate—a terminal disclaimer and fee.

Petitioner appears to have satisfied the requirements under the regulation.

CONCLUSION

The instant petition under 37 C.F.R. §1.137(b) is **granted**.

The instant application is released to Publications Branch to be processed into a patent in due course.

While telephone inquiries regarding this decision may be directed to the undersigned at (571) 272-3214, it is noted that all practice before the Office is in writing (see: 37 C.F.R. §1.2[6]) and the proper authority for action on any matter in this regard are the statutes (35 U.S.C.), regulations (37 C.F.R.) and the commentary on policy (MPEP). Therefore, no telephone discussion may be controlling or considered authority for Petitioner's action(s).

John J. Gillon, Jr.
Senior Attorney
Office of Petitions

---

[4] See: Diligence in Filing Petitions to Revive and Petitions to Withdraw the Holding of Abandonment, 1124 Off. Gaz. Pat. Office 33 (March 19, 1991). It was and is Petitioner's burden to exercise diligence in seeking either to have the holding of abandonment withdrawn or the application revived. See 1124 Off. Gaz. Pat. Office supra.

[5] Therefore, by example, an unintentional delay in the reply might occur if the reply and transmittal form are to be prepared for shipment by the US Postal Service, but other pressing matters distract one's attention and the mail is not timely deposited for shipment.

[6] The regulations at 37 C.F.R. §1.2 provide:

§1.2 Business to be transacted in writing.

All business with the Patent and Trademark Office should be transacted in writing. The personal attendance of applicants or their attorneys or agents at the Patent and Trademark Office is unnecessary. The action of the Patent and Trademark Office will be based exclusively on the written record in the Office. No attention will be paid to any alleged oral promise, stipulation, or understanding in relation to which there is disagreement or doubt.

UNITED STATES PATENT AND TRADEMARK OFFICE

Commissioner for Patents
United States Patent and Trademark Office
P.O. Box 1450
Alexandria, VA 22313-1450
www.uspto.gov

NORRIS MCLAUGHLIN & MARCUS PA
18TH FLOOR
875 THIRD AVENUE
NEW YORK NY 10022

COPY MAILED

OCT 0 1 2007

OFFICE OF PETITIONS

In re Application of :
Alain Miklitarian :
Application No. 29/240,031 : ON PETITION
Filed: October 7, 2005 :
Attorney Docket No. 101373-17 :

This is a decision in response to the petition to withdraw the holding of abandonment under 37 CFR 1.181, or in the alternative to revive due to unintentional delay pursuant to 37 CFR 1.137(b), filed September 11, 2007.

The petition under 37 CFR 1.181 is **DISMISSED**.

The petition under 37 CFR 1.137(b) is **GRANTED**.

Any request for reconsideration of this decision must be submitted within **TWO (2) MONTHS** from the mail date of this decision. The reconsideration request should include a cover letter entitled "Renewed Petition under 37 CFR 1.181" or "Renewed Petition under 37 CFR 1.137(b)". Extensions of time under 37 CFR 1.136(a) are permitted. No fee is required for a renewed petition.

The above-identified application became abandoned for failure to timely file a reply in response to the Notice of Allowance, mailed June 7, 2007, which set a statutory period for reply of three (3) months. No issue fee having been received, the application became abandoned by operation of law on September 8, 2007. The mailing of this decision precedes the mailing of a Notice of Abandonment.

Petition Under 37 CFR 1.181:

Petitioner states that the oversight in timely paying the issue fee was unintentional. A petition to withdraw the holding of abandonment is only appropriate in those situations where an applicant is disputing that the application is even abandoned. Where an applicant is not disputing the abandonment of the application, but applicant's contentions involve the cause of the abandonment, then the appropriate remedy is to file a petition to revive under 37 CFR 1.137(a) on the basis of unavoidable delay, or 37 CFR 1.137(b) on the basis of unintentional delay.

Petition Under 37 CFR 1.137(b):

A grantable petition pursuant to 37 CFR 1.137(b) must be accompanied by (1) The reply required to the outstanding Office action or notice, unless previously filed; (2) The petition fee as set forth in 37 CFR 1.17(m); (3) A statement that the entire delay in filing the required reply from the due date for the reply until the filing of a grantable petition pursuant to this paragraph was unintentional; and (4) Any terminal disclaimer (and fee as set forth in § 1.20(d)) required pursuant to paragraph (d) of this section.

The instant petition has not met item (4) above. As the instant application is a design application, a terminal disclaimer is required.

The $750 petition fee has been charged to Deposit Account No. 14-1263, as authorized.

Further correspondence with respect to this matter should be addressed as follows:

By mail: Mail Stop Petitions
Commissioner for Patents
P.O. Box 1450
Alexandria VA 22313-1450

By FAX: (571)273-8300
Attn: Office of Petitions

Telephone inquiries related to this decision should be directed to the undersigned at (571)272-3207.

Cliff Congo
Petitions Attorney
Office of Petitions

UNITED STATES PATENT AND TRADEMARK OFFICE

Commissioner for Patents
United States Patent and Trademark Office
P.O. Box 1450
Alexandria, VA 22313-1450
www.uspto.gov

NORRIS MCLAUGHLIN & MARCUS PA
18TH FLOOR
875 THIRD AVENUE
NEW YORK NY 10022

COPY MAILED

JAN 25 2008

OFFICE OF PETITIONS

In re Application of :
Alain Miklitarian :
Application No. 29/240,031 : ON PETITION
Filed: October 7, 2005 :
Attorney Docket No. 101373-17 :

This is a decision in response to the renewed petition to withdraw the holding of abandonment under 37 CFR 1.181, or in the alternative to revive due to unintentional delay pursuant to 37 CFR 1.137(b), filed November 14, 2007.

The petition under 37 CFR 1.181 is **DISMISSED**.

The petition under 37 CFR 1.137(b) is **GRANTED**.

The above-identified application became abandoned for failure to timely file a reply in response to the Notice of Allowance, mailed June 7, 2007, which set a statutory period for reply of three (3) months. No issue fee having been received, the application became abandoned by operation of law on September 8, 2007. Applicant filed a petition to withdraw the holding of abandonment, or in the alternative to revive under 37 CFR 1.137(b), on September 11, 2007. The Office mailed a decision on October 1, 2007, in which it was indicated that the petition to withdraw the holding of abandonment was dismissed, while the petition to revive was granted. This was in error. The decision should have indicated that the petition to revive was also dismissed. The Office mailed a Notice of Abandonment on October 5, 2007.

Petition Under 37 CFR 1.181:

Petitioner states that the issue fee was timely paid on September 11, 2007. However, the last day the issue fee could have been timely filed was September 7, 2007. As no issue fee was received by that date, the application became abandoned on September 8, 2007. Accordingly, the holding of abandonment was proper and will not be withdrawn.

Petition Under 37 CFR 1.137(b):

A grantable petition pursuant to 37 CFR 1.137(b) must be accompanied by (1) The reply required to the outstanding Office action or notice, unless previously filed; (2) The petition fee as set forth in 37 CFR 1.17(m); (3) A statement that the entire delay in filing the required reply from the due date for the reply until the filing of a grantable petition pursuant to this paragraph was unintentional; and (4) Any terminal disclaimer (and fee as set forth in § 1.20(d)) required pursuant to paragraph (d) of this section.

Petitioner has met the requirements set forth above.

The $65 fee for the terminal disclaimer has been charged to Deposit Account No. 14-1263, as authorized.

The matter is being forwarded to the Office of Patent Publication for processing into a patent.

Telephone inquiries related to this decision should be directed to the undersigned at (571)272-3207.

Cliff Congo
Petitions Attorney
Office of Petitions

UNITED STATES PATENT AND TRADEMARK OFFICE

Commissioner for Patents
United States Patent and Trademark Office
P.O. Box 1450
Alexandria, VA 22313-1450
www.uspto.gov

DART INDUSTRIES INC
P O BOX 779001
ORLANDO FL 32877-900

In re Application of	:	
ABLO, FAMIA E.	:	
Application No.: 29/240043	:	DECISION ON
Filing or 371(c) Date: October 7, 2005	:	PETITION
Attorney Docket Number: **131205-D200**	:	

This is a decision in response to the "Petition to Withdraw Holding of Abandonment," filed October 3, 2007.

The petition is **GRANTED**.

The above-identified application became abandoned for failure to timely and properly reply to the Notice of Allowability, mailed April 6, 2007.

In view of the foregoing, the holding of abandonment for failure to timely submit replacement drawings is hereby withdrawn and the application restored to pending status.

Telephone inquiries concerning this matter should be directed to the undersigned at (703) 756-1499.

Kendrick Sprunt
Application Assistance Unit
Office of Data Management

UNITED STATES PATENT AND TRADEMARK OFFICE

COMMISSIONER FOR PATENTS
UNITED STATES PATENT AND TRADEMARK OFFICE
P.O. BOX 1450
ALEXANDRIA, VA 22313-1450
www.uspto.gov

TOWNSEND AND TOWNSEND AND CREW, LLP
TWO EMBARCADERO CENTER
EIGHTH FLOOR
SAN FRANCISCO, CA 94111-3834

COPY MAILED
APR 2 8 2006
OFFICE OF PETITIONS

In re Application of	:	
Clark et al.	:	
Application No. 29/240,184	:	DECISION REFUSING
Filed: October 7, 2005	:	STATUS UNDER
Title of Invention: METHODS AND SYSTEMS TO EFFECT COMPREHENSIVE CUSTOMER RELATIONSHIP MANAGEMENT SOLUTIONS	:	37 CFR 1.47

This is in response to a Petition Under 37 CFR § 1.47(a), filed March 15, 2006, to allow the other inventor(s) to proceed with the application on behalf of himself or herself and the nonsigning inventor(s).

The petition is **dismissed**.

Rule 47 applicant is given TWO (2) MONTHS from the mailing date of this decision to reply, correcting the below-noted deficiencies. Any reply should be entitled "Request for Reconsideration of Petition Under 37 CFR 1.47(a)", and should only address the deficiencies noted below, except that the reply may include an oath or declaration executed by the non-signing inventor. Failure to respond will result in abandonment of the application. Any extensions of time will be governed by 37 CFR 1.136(a).

The above-identified application was filed on October 7, 2005, without an oath or declaration. In response, the Office mailed a Notice to File Missing Parts of Nonprovisional Application (hereinafter "Notice"), on November 3, 2005, requiring *inter alia*, an executed oath or declaration.

In response to the Notice, Applicant files the instant petition and avers that the nonsigning inventor is unavailable to execute the oath or declaration. In support of this assertion,

Applicant files a Declaration wherein Applicant provides, in relevant part, that a revised documents (presumably the application, declaration and assignment) were sent to the nonsigning inventor via email. The nonsigning inventor responded to the email, informing a legal assistant to Petitioner, Ms. Liwanag, that he had not received a copy of the application. Several emails were sent by Ms. Liwanag to the nonsigning inventor thereafter, however, no response from the nonsigning inventor has been received.

Applicable Law

A grantable petition under 37 CFR 1.47(a) requires: (1) proof that the non-signing inventor cannot be reached or refuses to sign the oath or declaration after having been presented with the application papers (specification, claims and drawings); (2) an acceptable oath or declaration in compliance with 35 U.S.C. §§ 115 and 116; (3) the petition fee; and (4) a statement of the last known address of the non-signing inventor. Applicant lacks items (1) and (2).

As to item (1),

> A refusal by an inventor to sign an oath or declaration when the inventor has not been presented with the application papers does not itself suggest that the inventor is refusing to join the application unless it is clear that the inventor understands exactly what he or she is being asked to sign and refuses to accept the application papers. A copy of the application papers should be sent to the last known address of the nonsigning inventor, or, if the nonsigning inventor is represented by counsel, to the address of the nonsigning inventor's attorney. It is reasonable to require that the inventor be presented with the application papers before a petition under 37 CFR 1.47 is granted since such a procedure ensures that the inventor is apprised of the application to which the oath or declaration is directed. In re Gray, 115 USPQ 80 (Comm'r Pat. 1956).

MPEP 409.03(d)

Here, Applicant has failed to demonstrate that the nonsigning inventor has been presented with a copy of the application. An electronic transmission of the

application, the receipt of which has not been verified, fails to support an assertion that the application was received by the nonsigning inventor. An inventor may not have the electronic capability to receive the transmission, or the transmission may have encountered errors resulting in the nonreceipt of the transmission. Moreover here, the nonsigning inventor conveyed non-receipt of the application after an electronic copy of the application had been sent to him.

Applicant should send a copy of the application via the United States Post Office to the nonsigning inventors last known mailing address. Failure of the nonsigning inventor to respond within a reasonable amount of time may be viewed as a constructive refusal to join in the application.

As to item (2), Applicant ha not filed an oath or declaration.

Conclusion

Applicant must present a copy of the application papers to the inventors. Also, an oath or declaration in compliance with 37 CFR 1.63, listing all of the inventors, with the signature block of the nonsigning inventor left blank, is required. See MPEP 409.03. Finally, Applicant must clarify for the record whether the application (specification, claims and drawings), were sent to the nonsigning inventor.

Further correspondence with respect to this matter should be addressed as follows:

By mail: Commissioner for Patents
PO Box 1450
Alexandria, VA 22313-1450

By FAX: (571) 273-8300
Attn: Office of Petitions

By hand: Customer Service Window
Randolph Building
401 Dulany Street
Alexandria, VA 22314

Telephone inquiries concerning this matter should be directed to the undersigned at (571) 272-3232.

Derek L. Woods
Petitions Attorney
Office of Petitions

UNITED STATES PATENT AND TRADEMARK OFFICE

COMMISSIONER FOR PATENTS
UNITED STATES PATENT AND TRADEMARK OFFICE
P.O. BOX 1450
ALEXANDRIA, VA 22313-1450
www.uspto.gov

TOWNSEND AND TOWNSEND AND CREW, LLP
TWO EMBARCADERO CENTER
EIGHTH FLOOR
SAN FRANCISCO, CA 94111-3834

COPY MAILED
JUL 26 2006
OFFICE OF PETITIONS

In re Application of	:	
Clark et al.	:	
Application No. 29/240,184	:	DECISION GRANTING
Filed: October 7, 2005	:	STATUS UNDER
Title of Invention:	:	37 CFR 1.47
CAMERA WITH V-SHAPED BODY	:	

This is in response to a Renewed Petition Under 37 CFR § 1.47(a), filed June 30, 2006, to allow the other inventor(s) to proceed with the application on behalf of himself or herself and the nonsigning inventor(s).

The petition is **granted**.

The above-identified application and papers have been reviewed and found in compliance with 37 CFR 1.47(a). This application is hereby accorded Rule 1.47(a) status.

Petitioner has shown that the non-signing inventor, Soren Juelsgaard, refuses to join in the application.

As provided in Rule 1.47(a), this Office will forward notice of this application's filing to the non-signing inventor at the addresses given in the Petition. Notice of the filing of this application will also be published in the Official Gazette.

The petition fee, $200.00 has been charged to Applicant's deposit account as authorized in the instant petition.

The application file is being returned to the Office of Initial Patent Examination for continued processing.

Telephone inquiries related to this decision may be directed to the undersigned at (571) 272-3232.

Derek L. Woods
Attorney
Office of Petitions

UNITED STATES PATENT AND TRADEMARK OFFICE

COMMISSIONER FOR PATENTS
UNITED STATES PATENT AND TRADEMARK OFFICE
P.O. BOX 1450
ALEXANDRIA, VA 22313-1450
www.uspto.gov

MR. SOREN JUELSGAARD
6230 SHATTUCK AVENUE
OAKLAND, CA 94609

COPY MAILED
JUL 26 2006
OFFICE OF PETITIONS

In re Application of	:	
Clark et al.	:	
Application No. 29/240,184	:	LETTER
Filed: October 7, 2005	:	
Title of Invention:	:	
CAMERA WITH V-SHAPED BODY	:	

Dear Mr. Jueslgaard:

You are named as a joint inventor in the above-identified United States patent application filed under the provisions of 35 U.S.C. 116 (United States Code) and 37 CFR 1.47(a), Rules of Practice in Patent Cases. Should a patent be granted on the application you will be designated therein as a joint inventor.

As a named inventor you are entitled to inspect any paper in the file wrapper of the application, order copies of all or any part thereof (at a prepaid cost per 37 CFR 1.19) or make your position of record in the application. Alternatively, you may arrange to do any of the preceding through a registered patent attorney or agent presenting written authorization from you. If you care to join the application, counsel of record (see below) would presumably assist you. Joining in the application would entail the filing of an appropriate oath or declaration by you pursuant to 37 CFR 1.63.

Telephone inquiries regarding this communication should be directed to the undersigned at (703) 305-0014. Requests for information regarding your application should be directed to the File Information Unit at (703) 308-2733. Information regarding how to pay for and order a copy of the application, or a specific paper in the application, should be directed to Certification Division at (703) 308-9726 or 1-800-972-6382 (outside the Washington D.C. area).

Derek L. Woods
Petitions Attorney
Office of Petitions

cc: TOWNSEND AND TOWNSEND AND CREW, LLP
TWO EMBARCADERO CENTER
EIGHTH FLOOR
SAN FRANCISCO, CA 94111-3834

PTO/SB/27 (05-03)
Approved for use through 04/30/2003. OMB 0651-0031
U.S. Patent and Trademark Office; U.S. DEPARTMENT OF COMMERCE
Under the Paperwork Reduction Act of 1995, no persons are required to respond to a collection of information unless it displays a valid OMB control number.

REQUEST FOR EXPEDITED EXAMINATION OF A DESIGN APPLICATION (37 CFR 1.155)

Application Number	TBD
Filing Date	October 12, 2005
First Named Inventor	Frederick J. Dojan et al.
Title	Portion Of A Shoe Midsole
Atty Docket Number	015127.00551

113006 U.S.PTO
29/240180
101205

HAND DELIVER TO THE DESIGN GROUP DIRECTOR'S OFFICE
-or- ADDRESS TO:
MAIL STOP EXPEDITED DESIGN
COMMISSIONER FOR PATENTS
P.O. Box 1450
Alexandria, VA 22313-1450

This is a request for expedited examination of a design application under 37 CFR 1.155.

NOTE: If the Request made by this form accompanies original application papers, include form PTO/SB/18 "Design Patent Application Transmittal" or its equivalent.

A preexamination search was conducted. The field of search was:

D2/896, 902, 907, 908, 944, 945, 946, 947, 964, 967, 968, 969, 972, and 977

Related applications: _____

If not previously filed for the above-identified application, the following items required by 37 CFR 1.155 are enclosed:

Formal drawings (see 37 CFR 1.84).

The fee set forth in 37 CFR 1.17(k).

An information disclosure statement in compliance with 37 CFR 1.98.

Approved 11/9/05
Jacqueline M. Stone
Jacqueline M. Stone, Director
Technology Center 1700

October 12, 2005
Date

Signature

202-824-3000
Telephone Number

Anthony W. Kandare, Reg. No. 48,830
Typed or printed name

WARNING: Information on this form may become public. Credit card information should not be included on this form. Provide credit card information and authorization on PTO-2038.

This collection of information is required by 37 CFR 1.155. The information is required to obtain or retain a benefit by the public which is to file (and by the USPTO to process) an application. Confidentiality is governed by 35 U.S.C. 122 and 37 CFR 1.14. This collection is estimated to take 6 minutes to complete, including gathering, preparing, and submitting the completed application form to the USPTO. Time will vary depending upon the individual case. Any comments on the amount of time you require to complete this form and/or suggestions for reducing this burden, should be sent to the Chief Information Officer, U.S. Patent and Trademark Office, U.S. Department of Commerce, P.O. Box 1450, Alexandria, VA 22313-1450. DO NOT SEND FEES OR COMPLETED FORMS TO THIS ADDRESS. SEND TO: Mail Stop Expedited Design, Commissioner for Patents, P.O. Box 1450, Alexandria, VA 22313-1450.

If you need assistance in completing the form, call 1-800-PTO-9199 and select option 2.

10/13/2005 LWONDIM1 00000089 190733 29240186
04 FC:1802 900.00 DA

PTO/SB/27 (05-03)
Approved for use through 04/30/2003. OMB 0651-0031
U.S. Patent and Trademark Office; U.S. DEPARTMENT OF COMMERCE
Under the Paperwork Reduction Act of 1995, no persons are required to respond to a collection of information unless it displays a valid OMB control number.

REQUEST FOR EXPEDITED EXAMINATION OF A DESIGN APPLICATION (37 CFR 1.155)

Application Number	TBD
Filing Date	October 12, 2005
First Named Inventor	Frederick J. Dojan et al.
Title	Portion Of A Shoe Midsole
Atty Docket Number	015127.00604

113006 U.S.PTO
29/240187
101205

HAND DELIVER TO THE DESIGN GROUP DIRECTOR'S OFFICE
-or- ADDRESS TO:
MAIL STOP EXPEDITED DESIGN
COMMISSIONER FOR PATENTS
P.O. Box 1450
Alexandria, VA 22313-1450

This is a request for expedited examination of a design application under 37 CFR 1.155.

NOTE: If the Request made by this form accompanies original application papers, include form PTO/SB/18 "Design Patent Application Transmittal" or its equivalent.

A preexamination search was conducted. The field of search was:

D2/896, 902, 907, 908, 943, 944, 964, 969, 972, and 977

Related applications: ____

If not previously filed for the above-identified application, the following items required by 37 CFR 1.155 are enclosed:

Formal drawings (see 37 CFR 1.84).

The fee set forth in 37 CFR 1.17(k).

An information disclosure statement in compliance with 37 CFR 1.98.

Approved 11/9/05
Jacqueline M. Stone
Jacqueline M. Stone, Director
Technology Center 1700

October 12, 2005
Date

Signature

202-824-3000
Telephone Number

Anthony W. Kandare, Reg. No. 48,830
Typed or printed name

WARNING: Information on this form may become public. Credit card information should not be included on this form. Provide credit card information and authorization on PTO-2038.

This collection of information is required by 37 CFR 1.155. The information is required to obtain or retain a benefit by the public which is to file (and by the USPTO to process) an application. Confidentiality is governed by 35 U.S.C. 122 and 37 CFR 1.14. This collection is estimated to take 6 minutes to complete, including gathering, preparing, and submitting the completed application form to the USPTO. Time will vary depending upon the individual case. Any comments on the amount of time you require to complete this form and/or suggestions for reducing this burden, should be sent to the Chief Information Officer, U.S. Patent and Trademark Office, U.S. Department of Commerce, P.O. Box 1450, Alexandria, VA 22313-1450. DO NOT SEND FEES OR COMPLETED FORMS TO THIS ADDRESS. SEND TO: Mail Stop Expedited Design, Commissioner for Patents, P.O. Box 1450, Alexandria, VA 22313-1450.

If you need assistance in completing the form, call 1-800-PTO-9199 and select option 2.

10/13/2005 LWONDIM1 00000088 190733 29240187
04 FC:1802 900.00 DA

UNITED STATES PATENT AND TRADEMARK OFFICE

Commissioner for Patents
United States Patent and Trademark Office
P.O. Box 1450
Alexandria, VA 22313-1450
www.uspto.gov

MILORD & ASSOCIATES, P.C.
10880 WILSHIRE BOULEVARD
SUITE 2070
LOS ANGELES CA 90024

COPY MAILED
AUG 0 9 2006
OFFICE OF PETITIONS

In re Application of :
Sayegh, Li and Shang :
Application No. 29/240,195 :
Filed: October 11, 2005 :
Attorney Docket No. SAY99-172P :

DECISION REFUSING STATUS
UNDER 37 CFR 1.47(a)

This is in response to the petition under 37 CFR 1.47(a) filed on February 2, 2006. Applicants obtained an extension of time for response within the first month. Therefore, the petition is filed timely. The petition was recently forwarded to the Office of Petitions for a decision on the merits. The Office sincerely apologizes for any inconvenience.

The petition is **dismissed**.

Applicants are given TWO (2) MONTHS from the mailing date of this decision to reply, correcting the below-noted deficiencies. Any reply should be entitled "Request for Reconsideration of Petition Under 37 CFR 1.47(a)," and should address the deficiencies noted below, except that the reply may include an oath or declaration executed by the non-signing inventor(s). Failure to respond will result in abandonment of the application. Any extensions of time will be governed by 37 CFR 1.136(a). No additional petition fee is necessary for filing a request for reconsideration.

In the present petition, join inventor Sayegh asserted that on four separate occasions he sent the Notice to File Missing Parts of Nonprovisional Application and a Declaration and Power of Attorney for Patent Application (37 CFR 1.63) via email to Century Classic & Electronics, the company where non-signing inventors, Li and Shang are employed, advising them of the due date for the response to Notice to File Missing Parts. Mr. Sayegh asserted that the non-signing inventors stated they would execute the Declaration and Power of Attorney and return the same, however, they failed to do so.

A grantable petition under 37 CFR 1.47(a) requires: (1) proof that the non-signing inventor cannot be reached or refuses to sign the oath or declaration after having been presented with the application papers (specification, claims and drawings); (2) an acceptable oath or declaration in compliance with 35 U.S.C. §§ 115 and 116; (3) the petition fee; and (4) a statement of the last known address of the non-signing inventor.

Applicants lack items (1) and (2) as set forth above.

As to item (1), it appears that applicants did not mail the non-signing inventors a complete copy of the application papers, including the specification, claims, and drawings. Unless applicants presented the non-signing inventors with a complete copy of the application papers, including the specification, claims and drawings, they could not attest that they reviewed and understood the contents of the application, and therefore, could not sign the declaration that they were given. Accordingly, applicants failed to show or provide proof that the non-signing inventors refused to sign the declaration. See MPEP 409.03(d).

To demonstrate that the inventor refused to join in the application, applicants must show that a complete copy of the application papers, including the specification, claims and drawings, was presented to the non-signing inventors, personally or through their designated representatives, and that they did not respond to the request that they sign the declaration. The circumstances of any refusal to join in the filing of the application must be made by all persons with firsthand knowledge of the event. If applicants choose to send the copy of the application papers via email rather than mail, applicants must show that the non-signing inventors received and opened the email.

As to item (2), applicants failed to submit an oath or declaration for the patent application in compliance with 37 CFR 1.63 and 1.64. The declaration does not identify the residence, mailing address or country of citizenship of the non-signing inventors. The Office notes that the oath or declaration must identify the country of citizenship of each inventor, as well as "[t]he mailing address, and the residence if an inventor lives at a location which is different from where the inventor customarily receives mail, of each inventor . . .." 37 CFR 1.63(c)(1).

Accordingly, to correct the deficiencies, applicants must submit a newly executed oath or declaration in compliance with 37 CFR 1.63 and 1.67, which identifies the entire inventive entity, the correct mailing address (and residence, if applicable) and citizenship of each inventor, and is signed by the Mr. Sayegh on behalf himself and the non-signing inventors.

Further correspondence with respect to this matter should be addressed as follows and **to the attention of Christina Tartera Donnell, Senior Petitions Attorney**:

By mail: Mail Stop Petition
Commissioner for Patents
P.O. Box 1450
Alexandria, VA 22313-1450

By FAX: (571) 273-8300
Attn: Office of Petitions

By hand: Customer Service Window
Randolph Building
401 Dulany Street
Alexandria, VA 22314

Telephone inquiries related to this decision may be directed to the undersigned at (571) 272-3211.

Christina Tartera Donnell

Christina Tartera Donnell
Senior Petitions Attorney
Office of Petitions

UNITED STATES PATENT AND TRADEMARK OFFICE

Commissioner for Patents
United States Patent and Trademark Office
P.O. Box 1450
Alexandria, VA 22313-1450
www.uspto.gov

MILORD & ASSOCIATES, P.C.
10880 WILSHIRE BOULEVARD
SUITE 2070
LOS ANGELES CA 90024

COPY MAILED
OCT 27 2006
OFFICE OF PETITIONS

In re Application of :
Sayegh, Li and Shang :
Application No. 29/240,195 :
Filed: October 11, 2005 :
Attorney Docket No. SAY99-172P :

DECISION REFUSING STATUS
UNDER 37 CFR 1.47(a)

This is in response to the renewed petition under 37 CFR 1.47(a) filed on October 9, 2006.

The petition is **dismissed**.

Applicants are given TWO (2) MONTHS from the mailing date of this decision to reply, correcting the below-noted deficiencies. Any reply should be entitled "Request for Reconsideration of Petition Under 37 CFR 1.47(a)," and should address the deficiencies noted below, except that the reply may include an oath or declaration executed by the non-signing inventor(s). Failure to respond will result in abandonment of the application. Any extensions of time will be governed by 37 CFR 1.136(a). No additional petition fee is necessary for filing a request for reconsideration.

In the present petition, join inventor Sayegh asserted that he sent a copy of the application papers, the Notice to File Missing Parts of Nonprovisional Application and a Declaration and Power of Attorney for Patent Application (37 CFR 1.63) via email to Century Classic & Electronics, the company where non-signing inventors, Li and Shang are employed, advising them of the due date for the response to Notice to File Missing Parts. Mr. Sayegh asserted: "Since January 5, 2006, Mr. Nan and Mr. Shang have acknowledged receipt of the application papers (specification, including claims, drawings, and the oath or declaration) via email, and have advised that they would execute the Declaration and Power of Attorney and return the same to me, but have failed to do so."

A grantable petition under 37 CFR 1.47(a) requires: (1) proof that the non-signing inventor cannot be reached or refuses to sign the oath or declaration after having been presented with the application papers (specification, claims and drawings); (2) an acceptable oath or declaration in compliance with 35 U.S.C. §§ 115 and 116; (3) the petition fee; and (4) a statement of the last known address of the non-signing inventor.

Applicants lack items (1) and (2) as set forth above.

As to item (1), inventor Sayegh stated "Mr. Nan" and Mr. Shang acknowledged receipt of the application papers (specification, including claims, drawings, and the oath or declaration) via email. However, it is unclear if applicants incorrectly stated Mr. Nan acknowledged receipt of the application, instead of Mr. Li. Applicants should clarify the identity of Mr. Nan or if this was a typographical error in the statement.

As to item (2), applicants failed to submit an oath or declaration for the patent application in compliance with 37 CFR 1.63 and 1.64. The declaration does not identify the country of citizenship of the non-signing inventors. Applicants are required by statute to identify the country of citizenship of each inventor in the oath or declaration. See 35 U.S.C. 115. This requirement cannot be waived.

Accordingly, to correct the deficiencies, applicants must submit a **newly** executed oath or declaration in compliance with 37 CFR 1.63 and 1.67, which identifies the entire inventive entity, the correct mailing address (and residence, if applicable) and **the citizenship of each inventor**, and is signed by the Mr. Sayegh on behalf himself and the non-signing inventors.

Further correspondence with respect to this matter should be addressed as follows and **to the attention of Christina Tartera Donnell, Senior Petitions Attorney**:

By mail: Mail Stop Petition
Commissioner for Patents
P.O. Box 1450
Alexandria, VA 22313-1450

By FAX: (571) 273-8300
Attn: Office of Petitions

By hand: Customer Service Window
Randolph Building
401 Dulany Street
Alexandria, VA 22314

Telephone inquiries related to this decision may be directed to the undersigned at (571) 272-3211.

Christina Tartera Donnell

Christina Tartera Donnell
Senior Petitions Attorney
Office of Petitions

UNITED STATES PATENT AND TRADEMARK OFFICE

Commissioner for Patents
United States Patent and Trademark Office
P.O. Box 1450
Alexandria, VA 22313-1450
www.uspto.gov

MILORD & ASSOCIATES, P.C.
10880 WILSHIRE BOULEVARD
SUITE 2070
LOS ANGELES CA 90024

COPY MAILED

OCT 05 2007

OFFICE OF PETITIONS

In re Application of
Sayegh, Li and Shang
Application No. 29/240,195
Filed: October 11, 2005
Attorney Docket No. SAY99-172P

DECISION NOTING JOINDER OF INVENTOR AND PETITION UNDER 37 CFR 1.47(a) AS MOOT

This is in response to the communication filed on June 21, 2007.

In response to the decision dismissing the original petition under 37 CFR 1.47(a), applicants submitted a declaration signed by all of the named inventors in the application. In view of the joinder of the inventors, further consideration under 37 CFR 1.47(a) is not necessary. Accordingly, the petition is dismissed as involving a moot issue. This application does not have any Rule 1.47(a) status and no such status should appear on the file wrapper. This application does not need to be returned to the Office of Petitions for further consideration under 37 CFR 1.47(a).

This matter is being referred to the Office of Initial Patent Examination for further processing.

Telephone inquiries should be directed to the undersigned at (571) 272-3211.

C. T. Donnell

Christina Tartera Donnell
Senior Petitions Attorney
Office of Petitions

UNITED STATES PATENT AND TRADEMARK OFFICE

Commissioner for Patents
United States Patent and Trademark Office
P.O. Box 1450
Alexandria, VA 22313-1450
www.uspto.gov

JJGJR.: 09-07

Paper No: __

COPY MAILED
SEP 24 2007
OFFICE OF PETITIONS

WILLIAM G. SYKES
3669 SEAGULL BLUFF DRIVE
VIRGINIA BEACH VA 23455

In re Application of :
Jackson, et al. : DECISION
Application No.: 29/240,244 :
Filing Date: 12 October, 2005 :
Attorney Docket No. (None)/50704 :

This is a decision on the petition filed on 29 June, 2007, and considered as a request to withdraw the holding of abandonment under 37 C.F.R. §1.181.

The Office regrets the delay in addressing this matter, however, the instant petition was presented to the attorneys in the Office of Petitions only at this writing.[1]

The petition as considered under 37 C.F.R. §1.181 is **DISMISSED**.

NOTES:

(1) Any petition (and fee) for reconsideration of this decision must be submitted within two (2) months from the mail date of this decision. Extensions of time under 37 C.F.R. §1.136(a) are permitted. The reconsideration request should include a cover letter entitled "Renewed Petition under 37 C.F.R. §1.181."

[1] NOTE: Monitoring of the status of applications on PAIR can inform one's management of application responses and provide an indication when mailings of Office actions should be expected. Status Inquiries filed at three (3) or four (4) month intervals provide a demonstration of diligence and attention in supporting a petition seeking relief under 37 C.F.R. §1.181.

(If Petitioner is unable to present even a satisfactory showing to support a petition under 37 C.F.R. §1.137(a), and Petitioner's only alternative will be to file a petition under 37 C.F.R. §1.137(b).)

(2) Thereafter, there will be no further reconsideration of this matter.[2]

BACKGROUND

The record reflects that:

- Petitioner failed to reply timely and properly to the Notice of Allowance/Allowability and Fees Due (copy enclosed) mailed on 14 November, 2006, with reply due under a non-extendable deadline on or before 14 February, 2007;
- the application went abandoned by operation of law after midnight 14 February, 2007;
- the Office mailed a Notice of Abandonment on 30 March, 2007;
- on 29 June, 2007, Petitioner filed the instant petition with, *inter alia*, an averment that he did not receive a copy of the Notice of Allowance/Allowability and Fees Due, but failed to make a statement of search, provide docket records for the instant application, and for the due date of the reply as set forth in the guidance of the Commentary at MPEP §711.03(c), as discussed below, and further averred that the Office action was mailed to the wrong address, however, a review of the record indicates that Petitioner directed the Office to mail correspondence to the address associated with Customer No. 50704–which appears on further examination to suggest that Petitioner incorrectly instructed the Office because that number is in fact Petitioner/Applicant's attorney registration number.

The statutes, the rules of practice and the guidance set forth in the Commentary of the Manual of Patent Examining Procedure (MPEP) provide many avenues for action and methods of protection for applicants, patentees, assignees, practitioners and others to accomplish tasks before the Office.

---

[2] For more than a century, punctuality and due diligence, equally with good faith, have been deemed essential requisites to the success of those who seek to obtain the special privileges of the patent law, and they are demanded in the interest of the public and for the protection of rival inventors. See: Porter v. Louden, 7 App.D.C. 64 (C.A.D.C. 1895), citing Wollensak v. Sargent, 151 U.S. 221, 228, 38 L. Ed. 137, 14 S. Ct. 291 (1894). An invention benefits no one unless it is made public, and the rule of diligence should be so applied as to encourage reasonable promptness in conferring this benefit upon the public. Automatic Electric Co. v. Dyson, 52 App. D.C. 82; 281 F. 586 (C.A.D.C. 1922). Generally, 35 U.S.C. §6; 37 C.F.R.§§1.181, 182, 183.

However, persons who fail to utilize those statutes and rules fail to succeed in their tasks or obtain those protections.

Notably, the availability of applications and application papers online to applicants/practitioners who diligently associate their Customer Number with the respective application(s) now provides an applicant/practitioner immediate and on-demand information as to events/transactions in an application. Thus, now if one wishes to know the progress in and/or status of an application or the accuracy of the data therein, one need only look at the file online.

Out of an abundance of caution, Petitioners always are reminded that the filing of a petition under 37 C.F.R. §1.181 does not toll any periods that may be running any action by the Office and a petition seeking relief under the regulation must be filed within two (2) months of the act complained of (see: 37 C.F.R. §1.181(f)); and those registered to practice *and* all others who make representations before the Office must inquire into the underlying facts of representations made to the Office and support averments with the appropriate documentation–since all owe to the Office the continuing duty to disclose.[3]

---

[3] See supplement of 17 June, 1999. The Patent and Trademark Office is relying on petitioner's duty of candor and good faith and accepting a statement made by Petitioner. See Changes to Patent Practice and Procedure, 62 Fed. Reg. at 53160 and 53178, 1203 Off. Gaz. Pat. Office at 88 and 103 (responses to comments 64 and 109)(applicant obligated under 37 C.F.R. §10.18 to inquire into the underlying facts and circumstances when providing statements to the Patent and Trademark Office).

Specifically, the regulations at 37 C.F.R. §10.18 provide:

§ 10.18 Signature and certificate for correspondence filed in the Patent and Trademark Office.
(a) For all documents filed in the Office in patent, trademark, and other non-patent matters, except for correspondence that is required to be signed by the applicant or party, each piece of correspondence filed by a practitioner in the Patent and Trademark Office must bear a signature by such practitioner complying with the provisions of §1.4(d), §1.4(e), or § 2.193(c)(1) of this chapter.
(b) By presenting to the Office (whether by signing, filing, submitting, or later advocating) any paper, the party presenting such paper, whether a practitioner or non-practitioner, is certifying that—

(1) All statements made therein of the party's own knowledge are true, all statements made therein on information and belief are believed to be true, and all statements made therein are made with the knowledge that whoever, in any matter within the jurisdiction of the Patent and Trademark Office, knowingly and willfully falsifies, conceals, or covers up by any trick, scheme, or device a material fact, or makes any false, fictitious or fraudulent statements or representations, or makes or uses any false writing or document knowing the same to contain any false, fictitious or fraudulent statement or entry, shall be subject to the penalties set forth under 18 U.S.C. 1001, and that violations of this paragraph may jeopardize the validity of the application or document, or the validity or enforceability of any patent, trademark registration, or certificate resulting therefrom; and

(2) To the best of the party's knowledge, information and belief, formed after an inquiry reasonable under the circumstances, that —

(i) The paper is not being presented for any improper purpose, such as to harass someone or to cause unnecessary delay or needless increase in the cost of prosecution before the Office;

(ii) The claims and other legal contentions therein are warranted by existing law or by a nonfrivolous argument for the extension, modification, or reversal of existing law or the establishment of new law;

(iii) The allegations and other factual contentions have evidentiary support or, if specifically so identified, are likely to have evidentiary support after a reasonable opportunity for further investigation or discovery; and

(iv) The denials of factual contentions are warranted on the evidence, or if specifically so identified, are reasonably based on a lack of information or belief.

(c) Violations of paragraph (b)(1) of this section by a practitioner or non-practitioner may jeopardize the validity of the application or document, or the validity or enforceability of any patent, trademark registration, or certificate resulting therefrom. Violations of any of paragraphs (b)(2)(i) through (iv) of this section are, after notice and reasonable opportunity to respond, subject to such sanctions as deemed appropriate by the Commissioner, or the Commissioner's designee, which may include, but are not limited to, any combination of —

(1) Holding certain facts to have been established;

(2) Returning papers;

(3) Precluding a party from filing a paper, or presenting or contesting an issue;

STATUTES, REGULATIONS AND ANALYSIS

Congress has authorized the Commissioner to "revive an application if the delay is shown to the satisfaction of the Commissioner to have been "unavoidable." 35 U.S.C. §133 (1994).[4]

The regulations at 37 C.F.R. §1.137(a) and (b) set forth the requirements for a petitioner to revive a previously unavoidably or unintentionally, respectively, abandoned application under this congressional grant of authority. The language of 35 U.S.C. §133 and 37 C.F.R. §1.137(a) is clear, unambiguous, and without qualification: the delay in tendering the reply to the outstanding Office action, as well as filing the first petition seeking revival, must have been unavoidable for the reply now to be accepted on petition.[5]

Delays in responding properly raise the question whether delays are unavoidable.[6] Where there is a question whether the delay was unavoidable, Petitioners must meet the burden of establishing that the delay was unavoidable within the meaning of 35 U.S.C. §133 and 37 C.F.R. §1.137(a).[7]

And the Petitioner must be diligent in attending to the matter.[8] Failure to do so does not constitute the care required under Pratt,[9] and so cannot satisfy the test for diligence and due care. (By contrast, unintentional delays are those that do not satisfy the very strict statutory and

---

(4) Imposing a monetary sanction;
(5) Requiring a terminal disclaimer for the period of the delay; or
(6) Terminating the proceedings in the Patent and Trademark Office.
(d) Any practitioner violating the provisions of this section may also be subject to disciplinary action. See § 10.23(c)(15).
[Added 50 FR 5175, Feb. 6, 1985, effective Mar. 8, 1985; para. (a) revised, 58 FR 54494, Oct. 22, 1993, effective Nov. 22, 1993; paras. (a) & (b) revised, paras. (c) & (d) added, 62 FR 53131, Oct. 10, 1997, effective Dec. 1, 1997; para. (a) revised, 69 FR 56481, Sept. 21, 2004, effective Oct. 21, 2004]

[4] 35 U.S.C. §133 provides:
35 U.S.C. §133 Time for prosecuting application.
Upon failure of the applicant to prosecute the application within six months after any action therein, of which notice has been given or mailed to the applicant, or within such shorter time, not less than thirty days, as fixed by the Commissioner in such action, the application shall be regarded as abandoned by the parties thereto, unless it be shown to the satisfaction of the Commissioner that such delay was unavoidable.

[5] Therefore, by example, an unavoidable delay in the payment of the Filing Fee might occur if a reply is shipped by the US Postal Service, but due to catastrophic accident, the delivery is not made.

[6] See: *Changes to Patent Practice and Procedure*; *Final Rule Notice*, 62 *Fed. Reg.* at 53158-59 (October 10, 1997), 1203 *Off. Gaz. Pat. Office* at 86-87 (October 21, 1997).

[7] See: In re Application of G, 11 USPQ2d 1378, 1380 (Comm'r Pats. 1989).

[8] See: Diligence in Filing Petitions to Revive and Petitions to Withdraw the Holding of Abandonment, 1124 Off. Gaz. Pat. Office 33 (March 19, 1991). It was and is Petitioner's burden to exercise diligence in seeking either to have the holding of abandonment withdrawn or the application revived. See 1124 Off. Gaz. Pat. Office supra.

[9] Ex parte Pratt, 1887 Dec. Comm'r Pat. 31, 32-33 (Comm'r Pat. 1887) (the term "unavoidable" "is applicable to ordinary human affairs, and requires no more or greater care or diligence than is generally used and observed by prudent and careful men in relation to their most important business"); In re Mattullath, 38 App. D.C. 497, 514-15 (D.C. Cir. 1912); Ex parte Henrich, 1913 Dec. Comm'r Pat. 139, 141 (Comm'r Pat. 1913).

regulatory requirements of unavoidable delay, and also, by definition, are not intentional.[10]))

Allegations as to the Request to
Withdraw the Holding of Abandonment

The courts have determined the construct for properly supporting a petition seeking withdrawal of a holding of abandonment.[11]

The commentary at MPEP §711.03(c) provides:

* * *

A. Petition To Withdraw Holding of Abandonment Based on Failure To Receive Office Action

In *Delgar v. Schulyer*, 172 USPQ 513 (D.D.C. 1971), the court decided that the Office should mail a new Notice of Allowance in view of the evidence presented in support of the contention that the applicant's representative did not receive the original Notice of Allowance. Under the reasoning of *Delgar*, an allegation that an Office action was never received may be considered in a petition to withdraw the holding of abandonment. If adequately supported, the Office may grant the petition to withdraw the holding of abandonment and remail the Office action. That is, the reasoning of *Delgar* is applicable regardless of whether an application is held abandoned for failure to timely pay the issue fee (35 U.S.C. 151) or for failure to prosecute (35 U.S.C. 133). To minimize costs and burdens to practitioners and the Office, the Office has modified the showing required to establish nonreceipt of an Office action. The showing required to establish nonreceipt of an Office communication must include a statement from the practitioner stating that the Office communication was not received by the practitioner and attesting to the fact that a search of the file jacket and docket records indicates that the Office communication was not received. A copy of the docket record where the nonreceived Office communication would have been entered had it been received and docketed must be attached to and referenced in practitioner's statement. For example, if a three month period for reply was set in the nonreceived Office action, a copy of the docket report showing all replies docketed for a date three months from the mail date of the nonreceived Office action must be submitted as documentary proof of nonreceipt of the Office action.

---

[10] Therefore, by example, an unintentional delay in the reply might occur if the reply and transmittal form are to be prepared for shipment by the US Postal Service, but other pressing matters distract one's attention and the mail is not timely deposited for shipment.

[11] See: Delgar v. Schulyer, 172 USPQ 513 (D.D.C. 1971).

* **

> The showing outlined above may not be sufficient if there are circumstances that point to a conclusion that the Office action may have been lost after receipt rather than a conclusion that the Office action was lost in the mail (e.g., if the practitioner has a history of not receiving Office actions).
>
> Evidence of nonreceipt of an Office communication or action (e.g., Notice of Abandonment or an advisory action) other than that action to which reply was required to avoid abandonment would not warrant withdrawal of the holding of abandonment. Abandonment takes place by operation of law for failure to reply to an Office action or timely pay the issue fee, not by operation of the mailing of a Notice of Abandonment. See *Lorenz v. Finkl*, 333 F.2d 885, 889-90, 142 USPQ 26, 29-30 (CCPA 1964); *Krahn v. Commissioner*, 15 USPQ2d 1823, 1824 (E.D. Va 1990); *In re Application of Fischer*, 6 USPQ2d 1573, 1574 (Comm'r Pat. 1988). (Emphasis supplied.)

* * *

Moreover, the regulation places upon Petitioner a diligence requirement to seek relief within two (2) months of the act complained of.

It appears that Petitioner has not satisfied the showing requirement herein.

CONCLUSION

Because it appears that Petitioner has not satisfied the burdens herein, the petition as considered under 37 C.F.R. §1.181 is **dismissed**.

ALTERNATIVE VENUE

Petitioner may wish to file a petition to the Commissioner requesting revival of an application abandoned due to unintentional delay under 37 C.F.R. §1.137(b). (See: http://www.uspto.gov/web/offices/pac/mpep/documents/0700_711_03_c.htm#sect711.03c)[12]

A petition to revive on the grounds of unintentional delay must be filed promptly and such petition must be accompanied by the reply (the amendment), the petition fee, a terminal disclaimer and fee where appropriate and a statement that "the entire delay in filing the required

---

[12] See fee schedule: http://www.uspto.gov/main/howtofees.htm

reply from the due date for the reply until the filing of a grantable petition was unintentional." (The statement is in the form available online.)

Further correspondence with respect to this matter should be addressed as follows:[13]

By mail: Commissioner for Patents[14]
P.O. Box 1450
Alexandria, VA 22313-1450

By FAX: IFW Formal Filings
(571) 273-8300
ATTN.: Office of Petitions

By hand: Mail Stop: Petition
Customer Service Window
Randolph Building
401 Dulany Street
Alexandria, VA 22314

While telephone inquiries regarding this decision may be directed to the undersigned at (571) 272-3214, it is noted that all practice before the Office is in writing (see: 37 C.F.R. §1.2[15]) and the proper authority for action on any matter in this regard are the statutes (35 U.S.C.), regulations (37 C.F.R.) and the commentary on policy (MPEP). Therefore, no telephone discussion may be controlling or considered authority for Petitioner's action(s).

John J. Gillon, Jr.
Senior Attorney
Office of Petitions

---

[13] On July 15, 2005, the Central Facsimile (FAX) Number changed to (571) 273-8300. The old FAX number no longer is in service and (571) 273-8300 will be the only facsimile number recognized for centralized delivery. (For further information. see: http://www.uspto.gov/web/offices/pac/dapp/opla/preognotice/cfax062005.pdf .)

[14] To determine the appropriate addresses for other subject-specific correspondence, refer to the USPTO Web site at www.uspto.gov.

[15] The regulations at 37 C.F.R. §1.2 provide:

§1.2 Business to be transacted in writing.

All business with the Patent and Trademark Office should be transacted in writing.The personal attendance of applicants or their attorneys or agents at the Patent and Trademark Office is unnecessary. The action of the Patent and Trademark Office will be based exclusively on the written record in the Office. No attention will be paid to any alleged oral promise, stipulation,or understanding in relation to which there is disagreement or doubt.

UNITED STATES PATENT AND TRADEMARK OFFICE

UNITED STATES DEPARTMENT OF COMMERCE
United States Patent and Trademark Office
Address: COMMISSIONER FOR PATENTS
P.O. Box 1450
Alexandria, Virginia 22313-1450
www.uspto.gov

NOTICE OF ALLOWANCE AND FEE(S) DUE

50704 7590 11/14/2006

MICHAEL DANY
87 HIGH VIEW DRIVE
WADING RIVER, NY 11792

SYLCB / JACKSON

EXAMINER	
LICHTENSTEIN, LISA P	
ART UNIT	PAPER NUMBER
2916	

DATE MAILED: 11/14/2006

APPLICATION NO.	FILING DATE	FIRST NAMED INVENTOR	ATTORNEY DOCKET NO.	CONFIRMATION NO.
29/240,244	10/12/2005	James S. Jackson	50704	3362

TITLE OF INVENTION: CRAWLSPACE DOOR FAN

APPLN. TYPE	SMALL ENTITY	ISSUE FEE DUE	PUBLICATION FEE DUE	PREV. PAID ISSUE FEE	TOTAL FEE(S) DUE	DATE DUE
nonprovisional	YES	$400	$0	$0	$400	02/14/2007

THE APPLICATION IDENTIFIED ABOVE HAS BEEN EXAMINED AND IS ALLOWED FOR ISSUANCE AS A PATENT. PROSECUTION ON THE MERITS IS CLOSED. THIS NOTICE OF ALLOWANCE IS NOT A GRANT OF PATENT RIGHTS. THIS APPLICATION IS SUBJECT TO WITHDRAWAL FROM ISSUE AT THE INITIATIVE OF THE OFFICE OR UPON PETITION BY THE APPLICANT. SEE 37 CFR 1.313 AND MPEP 1308.

THE ISSUE FEE AND PUBLICATION FEE (IF REQUIRED) MUST BE PAID WITHIN THREE MONTHS FROM THE MAILING DATE OF THIS NOTICE OR THIS APPLICATION SHALL BE REGARDED AS ABANDONED. THIS STATUTORY PERIOD CANNOT BE EXTENDED. SEE 35 U.S.C. 151. THE ISSUE FEE DUE INDICATED ABOVE DOES NOT REFLECT A CREDIT FOR ANY PREVIOUSLY PAID ISSUE FEE IN THIS APPLICATION. IF AN ISSUE FEE HAS PREVIOUSLY BEEN PAID IN THIS APPLICATION (AS SHOWN ABOVE), THE RETURN OF PART B OF THIS FORM WILL BE CONSIDERED A REQUEST TO REAPPLY THE PREVIOUSLY PAID ISSUE FEE TOWARD THE ISSUE FEE NOW DUE.

HOW TO REPLY TO THIS NOTICE:

I. Review the SMALL ENTITY status shown above.

If the SMALL ENTITY is shown as YES, verify your current SMALL ENTITY status:

A. If the status is the same, pay the TOTAL FEE(S) DUE shown above.

B. If the status above is to be removed, check box 5b on Part B - Fee(s) Transmittal and pay the PUBLICATION FEE (if required) and twice the amount of the ISSUE FEE shown above, or

If the SMALL ENTITY is shown as NO:

A. Pay TOTAL FEE(S) DUE shown above, or

B. If applicant claimed SMALL ENTITY status before, or is now claiming SMALL ENTITY status, check box 5a on Part B - Fee(s) Transmittal and pay the PUBLICATION FEE (if required) and 1/2 the ISSUE FEE shown above.

II. PART B - FEE(S) TRANSMITTAL, or its equivalent, must be completed and returned to the United States Patent and Trademark Office (USPTO) with your ISSUE FEE and PUBLICATION FEE (if required). If you are charging the fee(s) to your deposit account, section "4b" of Part B - Fee(s) Transmittal should be completed and an extra copy of the form should be submitted. If an equivalent of Part B is filed, a request to reapply a previously paid issue fee must be clearly made, and delays in processing may occur due to the difficulty in recognizing the paper as an equivalent of Part B.

III. All communications regarding this application must give the application number. Please direct all communications prior to issuance to Mail Stop ISSUE FEE unless advised to the contrary.

IMPORTANT REMINDER: Utility patents issuing on applications filed on or after Dec. 12, 1980 may require payment of maintenance fees. It is patentee's responsibility to ensure timely payment of maintenance fees when due.

PTOL-85 (Rev. 07/06) Approved for use through 04/30/2007.

PART B - FEE(S) TRANSMITTAL

Complete and send this form, together with applicable fee(s), to: Mail Mail Stop ISSUE FEE
Commissioner for Patents
P.O. Box 1450
Alexandria, Virginia 22313-1450
or Fax (571)-273-2885

INSTRUCTIONS: This form should be used for transmitting the ISSUE FEE and PUBLICATION FEE (if required). Blocks 1 through 5 should be completed where appropriate. All further correspondence including the Patent, advance orders and notification of maintenance fees will be mailed to the current correspondence address as indicated unless corrected below or directed otherwise in Block 1, by (a) specifying a new correspondence address; and/or (b) indicating a separate "FEE ADDRESS" for maintenance fee notifications.

CURRENT CORRESPONDENCE ADDRESS (Note: Use Block 1 for any change of address)

50704 7590 11/14/2006

MICHAEL DANY
87 HIGH VIEW DRIVE
WADING RIVER, NY 11792

Note: A certificate of mailing can only be used for domestic mailings of the Fee(s) Transmittal. This certificate cannot be used for any other accompanying papers. Each additional paper, such as an assignment or formal drawing, must have its own certificate of mailing or transmission.

Certificate of Mailing or Transmission
I hereby certify that this Fee(s) Transmittal is being deposited with the United States Postal Service with sufficient postage for first class mail in an envelope addressed to the Mail Stop ISSUE FEE address above, or being facsimile transmitted to the USPTO (571) 273-2885, on the date indicated below.

(Depositor's name)
(Signature)
(Date)

APPLICATION NO.	FILING DATE	FIRST NAMED INVENTOR	ATTORNEY DOCKET NO.	CONFIRMATION NO.
29/240,244	10/12/2005	James S. Jackson	50704	3362

TITLE OF INVENTION: CRAWLSPACE DOOR FAN

APPLN. TYPE	SMALL ENTITY	ISSUE FEE DUE	PUBLICATION FEE DUE	PREV. PAID ISSUE FEE	TOTAL FEE(S) DUE	DATE DUE
nonprovisional	YES	$400	$0	$0	$400	02/14/2007

EXAMINER	ART UNIT	CLASS-SUBCLASS
LICHTENSTEIN, LISA P	2916	D23-371000

1. Change of correspondence address or indication of "Fee Address" (37 CFR 1.363).
☐ Change of correspondence address (or Change of Correspondence Address form PTO/SB/122) attached.
☐ "Fee Address" indication (or "Fee Address" Indication form PTO/SB/47; Rev 03-02 or more recent) attached. **Use of a Customer Number is required.**

2. For printing on the patent front page, list
(1) the names of up to 3 registered patent attorneys or agents OR, alternatively,
(2) the name of a single firm (having as a member a registered attorney or agent) and the names of up to 2 registered patent attorneys or agents. If no name is listed, no name will be printed.
1 _____
2 _____
3 _____

3. ASSIGNEE NAME AND RESIDENCE DATA TO BE PRINTED ON THE PATENT (print or type)

PLEASE NOTE: Unless an assignee is identified below, no assignee data will appear on the patent. If an assignee is identified below, the document has been filed for recordation as set forth in 37 CFR 3.11. Completion of this form is NOT a substitute for filing an assignment.

(A) NAME OF ASSIGNEE (B) RESIDENCE: (CITY and STATE OR COUNTRY)

Please check the appropriate assignee category or categories (will not be printed on the patent) : ☐ Individual ☐ Corporation or other private group entity ☐ Government

4a. The following fee(s) are submitted:
☐ Issue Fee
☐ Publication Fee (No small entity discount permitted)
☐ Advance Order - # of Copies _____

4b. Payment of Fee(s): **(Please first reapply any previously paid issue fee shown above)**
☐ A check is enclosed.
☐ Payment by credit card. Form PTO-2038 is attached.
☐ The Director is hereby authorized to charge the required fee(s), any deficiency, or credit any overpayment, to Deposit Account Number _____ (enclose an extra copy of this form).

5. **Change in Entity Status** (from status indicated above)
☐ a. Applicant claims SMALL ENTITY status. See 37 CFR 1.27. ☐ b. Applicant is no longer claiming SMALL ENTITY status. See 37 CFR 1.27(g)(2).

NOTE: The Issue Fee and Publication Fee (if required) will not be accepted from anyone other than the applicant; a registered attorney or agent; or the assignee or other party in interest as shown by the records of the United States Patent and Trademark Office.

Authorized Signature _____ Date _____

Typed or printed name _____ Registration No. _____

This collection of information is required by 37 CFR 1.311. The information is required to obtain or retain a benefit by the public which is to file (and by the USPTO to process) an application. Confidentiality is governed by 35 U.S.C. 122 and 37 CFR 1.14. This collection is estimated to take 12 minutes to complete, including gathering, preparing, and submitting the completed application form to the USPTO. Time will vary depending upon the individual case. Any comments on the amount of time you require to complete this form and/or suggestions for reducing this burden, should be sent to the Chief Information Officer, U.S. Patent and Trademark Office, U.S. Department of Commerce, P.O. Box 1450, Alexandria, Virginia 22313-1450. DO NOT SEND FEES OR COMPLETED FORMS TO THIS ADDRESS. SEND TO: Commissioner for Patents, P.O. Box 1450, Alexandria, Virginia 22313-1450.

Under the Paperwork Reduction Act of 1995, no persons are required to respond to a collection of information unless it displays a valid OMB control number.

UNITED STATES PATENT AND TRADEMARK OFFICE

UNITED STATES DEPARTMENT OF COMMERCE
United States Patent and Trademark Office
Address: COMMISSIONER FOR PATENTS
P.O. Box 1450
Alexandria, Virginia 22313-1450
www.uspto.gov

APPLICATION NO.	FILING DATE	FIRST NAMED INVENTOR	ATTORNEY DOCKET NO.	CONFIRMATION NO.
29/240,244	10/12/2005	James S. Jackson	50704	3362

50704 7590 11/14/2006

MICHAEL DANY
87 HIGH VIEW DRIVE
WADING RIVER, NY 11792

EXAMINER	
LICHTENSTEIN, LISA P	
ART UNIT	PAPER NUMBER
2916	

DATE MAILED: 11/14/2006

Determination of Patent Term Extension or Adjustment under 35 U.S.C. 154 (b)

Design patents have a term measured from the issue date of the patent and the term remains the same length regardless of the time that the application for the design patent was pending. Since the above-identified application is an application for a design patent, the patent is not eligible for Patent Term Extension or Adjustment under 35 U.S.C. 154(b).

Any questions regarding the Patent Term Extension or Adjustment determination should be directed to the Office of Patent Legal Administration at (571)-272-7702. Questions relating to issue and publication fee payments should be directed to the Customer Service Center of the Office of Patent Publication at 1-(888)-786-0101 or (571)-272-4200.

PTOL-85 (Rev. 07/06) Approved for use through 04/30/2007.

Notice of Allowability For A Design Application	Application No. 29/240,244	Applicant(s) JACKSON ET AL.
	Examiner Lisa P. Lichtenstein	Art Unit 2916

-- ***The MAILING DATE of this communication appears on the cover sheet with the correspondence address***--

All claims being allowable, PROSECUTION ON THE MERITS IS (OR REMAINS) CLOSED in this application. If not included herewith (or previously mailed), a Notice of Allowance (PTOL-85) or other appropriate communication will be mailed in due course. **THIS NOTICE OF ALLOWABILITY IS NOT A GRANT OF PATENT RIGHTS.** This application is subject to withdrawal from issue at the initiative of the Office or upon petition by the applicant. See 37 CFR 1.313 and MPEP 1308.

1. ☐ This communication is responsive to _____.

2. ☒ The claim is allowed.

3. ☐ Acceptable drawings:

   (a) ☐ The drawings filed on _____ are accepted by the Examiner.

   (b) ☐ Drawing Figures filed on _____ and drawing Figures filed on _____ are accepted by the Examiner.

4. ☐ The claim for foreign priority under 35 U.S.C. § 119(a)-(d) or (f) is acknowledged.

   a) ☐ All b) ☐ Some* c) ☐ None of the:

   1. ☐ Certified copies of the priority documents have been received.
   2. ☐ Certified copies of the priority documents have been received in Application No. _____.
   3. ☐ Copies of the certified copies of the priority documents have been received in this national stage application from the International Bureau (PCT Rule 17.2(a)).

   * Certified copies not received: _____.

Applicant has THREE MONTHS FROM THE "MAILING DATE" of this communication to file a reply complying with the requirements noted below. Failure to timely comply will result in ABANDONMENT of this application.
THIS THREE-MONTH PERIOD IS NOT EXTENDABLE.

5. ☐ A SUBSTITUTE OATH OR DECLARATION must be submitted. Note the attached EXAMINER'S AMENDMENT or NOTICE OF INFORMAL PATENT APPLICATION (PTO-152) which gives reason(s) why the oath or declaration is deficient.

6. ☒ CORRECTED DRAWINGS (as "replacement sheets") must be submitted.

   (a) ☐ including changes required by the Notice of Draftsperson's Patent Drawing Review (PTO-948) attached

   1) ☐ hereto or 2) ☐ to Paper No./Mail Date _____.

   (b) ☒ including changes required by the attached Examiner's Amendment / Comment or in the Office action of Paper No./Mail Date _____.

Identifying indicia such as the application number (see 37 CFR 1.84(c)) should be written on the drawings in the front (not the back) of each sheet. Replacement sheet(s) should be labeled as such in the header according to 37 CFR 1.121(d).

Attachment(s)

1. ☒ Notice of References Cited (PTO-892)
2. ☐ Notice of Draftperson's Patent Drawing Review (PTO-948)
3. ☐ Information Disclosure Statements (PTO/SB/08), Paper No./Receipt Date _____
5. ☐ Notice of Informal Patent Application
6. ☐ Interview Summary (PTO-413), Paper No./Mail Date _____.
7. ☒ Examiner's Amendment/Comment
8. ☐ Examiner's Statement of Reasons for Allowance
9. ☒ Other *annotated print of drawing*.

Lisa P Lichtenstein
Primary Examiner
Art Unit: 2916

NOTE:

Value of Assistance

It would appear from an examination of this application that you are unfamiliar with some aspects of design patent prosecuting procedure and/or drafting technique. While an inventor may prosecute the application or execute the drawings, lack of skill in either field usually acts as a liability in obtaining the maximum patent protection. After reviewing this Office action you may want to consider securing the services of a registered patent attorney or patent agent to prosecute the application, and/or an experienced patent draftsperson to execute suitable drawings, since the marketplace value of a design patent greatly depends on skillful preparation and prosecution. A registered patent attorney is an attorney who has been certified by the Patent and Trademark Office as qualified to represent applicants before the Office. A registered agent has also been certified by the Office, but is not an attorney. A draftsperson should have specific (preferably design) patent experience, rather than a basic skill in mechanical drawing. The Office cannot aid in selecting an attorney, agent or draftsperson. However, the following publications are available: *Attorneys and Agents Registered to Practice Before the U.S. Patent and Trademark Office* and *Guide for the Preparation of Patent Drawings*. These publications are for sale by the Superintendent of Documents, US Government Printing Office, Washington, DC 20402. Moreover, patent draftspersons can generally be contacted through the telephone book classified listings; it may be more useful to enter <patent drafting services> into an Internet search engine – that search will produce many links to professional services. The *Guide to Filing A Design Patent Application* can be found at:

http://www.uspto.gov/web/offices/com/iip/pdf/brochure_05.pdf

In addition, information concerning the filing of patent applications can be found on the Internet at:

http://www.uspto.gov/web/offices/com/iip/index.htm.

How to respond to this PTO Office Action

Applicant should keep this letter for his/her files; do not send it back to the Office. If applicant does not have copies of the application as filed, the examiner (see phone number below) can provide a copy because it will be difficult to continue to work on this application without a copy.

If, after reviewing the Office action (this letter), applicant elects to continue prosecution of the application, a reply to the action must be submitted and should request reconsideration or further examination, with or without amendment. In order to be entitled to reconsideration or further examination, this request for reconsideration or further examination must be made in writing. The response must distinctly and specifically point out the supposed errors in the Office action and must respond to every objection and rejection in the Office action. If the examiner has rejected the claim over prior art (an article or articles which were previously invented), a general statement that the claim is patentable without specifically pointing out how the design patentably distinguishes from the prior art does not comply with the rules.

In all cases where the examiner has said that a response to a requirement is necessary, or where the examiner has indicated patentable subject matter, the response must either comply with the requirement(s) or specifically argue each one that is not complied with.

When sending the response to this Office action, applicant should label all papers, except drawings, "RESPONSE/AMENDMENT" and have the following items of information prominently displayed (in the upper right or left hand corner):

1. Serial number (checked for accuracy).
2. Group Art Unit number (copied from filing receipt or most recent Office action).
3. Filing date.
4. Name of the examiner who prepared the most recent Office action.
5. Title of invention.

The above information should be added to the back of all drawing sheets submitted.

Certificate of Mailing

It is the applicant's responsibility to make sure that the response is **received at the PTO before the expiration of the time set which runs from the mailing date** (found on the first page of this action). If that does not happen, the application will be considered abandoned. To ensure that a critical date is not missed, if the response is mailed (in the United States Postal Service) before the response time has expired, a "Certificate of Mailing" may be included which merely certifies that the response is being mailed on a given date. This certification establishes that the response is timely, if it was mailed before the period for response had expired. A Certificate of Mailing **is not the same** as Certified Mail. A suggested format for a certificate follows.

> "I hereby certify that this correspondence is being deposited with the United States Postal Service as first class mail in an envelope addressed to: Commissioner for Patents, P.O. Box 1450 Alexandria, VA 22313-1450, on (date)."
>
> Name of Applicant, Assignee, or Registered Representative ----------
> Signature ----------
>
> Date ----------

In order that applicant receive a receipt which establishes the date on which his response was received in the Office, he/she should include a stamped, self-addressed postcard which lists the types of papers submitted with his/her response (for example, the serial number and applicant's name ALWAYS, 2 pages of response, 3 sheets of drawing, 1 page of a declaration/oath, etc.) on the message side. This postcard will be stamped with the date of receipt and mailed back to applicant; this postcard is evidence that the response was received in the Office on that date.

If you do not respond within the time for response

In the event that applicant is not able to respond within the period for response set in the Office action, the application may still be prevented from becoming abandoned if the response is filed within six months from the mail date of the Office Action. This extension of the period is permitted only if requested and the appropriate fee for an extension of time is included. The Office charges separate fees for each month of extension of time needed to respond to an Action; the fees are set by rule, and could change. To encourage promptness, the fees are larger for the larger amounts of time. Applicant may call the examiner who will provide the fee information if an extension of time is necessary.

Change of address

If applicant changes his/her mailing address or moves, he/she must notify the Office promptly of the new address. Failure to do so will result in future communications being sent to the old address; and, if applicant does not receive a communication and fails to file the required response, the application could become abandoned. Notification should be specific to each pending application (identified as noted above) and should be the subject of a single letter, entitled "Change of Address".

How to Amend an Application

To revise the specification and claim to present your application in proper form, use the following guidance. While your application can be revised (amended) to make it clearly understandable, no subject matter can be added that was not disclosed in the application as originally filed. This is called "new matter" and is prohibited by Title 35, United States Code, Section 132 and Title 37, Code of Federal Regulations, Section 1.121(f). The election of an embodiment for further prosecution as a result of a restriction requirement by the examiner does **not** constitute new matter.

Normally, you do not need to make an amendment unless the examiner requires or suggests it in an Office action.

To make an amendment(s) to the text of an application, you must send a paper to the Office directing that a specified amendment(s) be made. The paper should be

conspicuously titled AMENDMENT, and identified as described in the section above entitled "How to Respond to this PTO Office Action". Amendments must be made that apply to entire paragraphs or sections, such as the specification. The following procedures must be followed when making amendments to your application.

Begin on separate sheets:

Each section of an amendment (e.g., Claim Amendments, Specification Amendments, Remarks) should begin on a separate sheet. *For example*, in an amendment containing a.) introductory comments, b.) amendments to the claims, c.) amendments to the specification, and d.) remarks, each of these sections should begin on a separate sheet.

A) Amendments to the specification:

An amendment to the specification may be made by presenting a replacement paragraph, section or substitute specification marked up to show changes made relative to the immediate prior version. The changes in any amended specification should be shown by strikethrough (for deleted matter) or underlining (for added matter).

B) Amendments to the claim:

An amendment to the claim must be presented with markings to indicate the changes that have been made relative to the immediate prior version. The changes in any amended claim should be shown by strikethrough (for deleted matter) or underlining (for added matter).

C) Amendments to drawing figures:

Drawing changes may be made by presenting replacement figures which incorporate the proposed changes and which comply with 37 CFR 1.84. An explanation of the changes made must be presented in remarks section of the amendment, and may be accompanied by a marked-up copy of one or more of the figures being amended, with annotations. If changes to the drawing figure(s) are not approved by the examiner, applicant will be informed in the next Office action. Any replacement drawing sheet must be identified in the top margin as "Replacement Sheet" and include all of the figures appearing on the immediate prior version of the sheet, even though only one figure may be amended. Any marked-up (annotated) copy showing changes must be

labeled "Annotated Marked-up Drawings" and accompany the replacement sheet in the amendment (e.g., as an appendix). The figure or figure number of the amended drawing should **not** be labeled as "amended." If the changes to the drawing figure(s) are not accepted by the examiner, applicant will be notified of any required corrective action in the next Office action. No further drawing submission will be required, unless applicant is notified.

The first line of the specification beginning "I, James S. Jackson..." and ending "...following specification:" has been amended by replacing "I" with --We--.

For accuracy the Figs.2,5,6 and 7 descriptions have been amended by deleting "plan". The Figs. 5 and 6 descriptions have been amended by replacing "a" with --an enlarged--.

For proper form (37CFR 1.153) the claim has been amended by replacing "I Claim" with --We Claim--.

The following correction to the drawing is required to be made:

Member A, shown in Figs 3,4and 7 must be shown in Fig. 6, (note annotated print of drawing attached to this action).

Corrected drawing sheets are required in reply to the Office action to avoid abandonment of the application. Any amended replacement drawing sheet should include all of the figures appearing on the immediate prior version of the sheet, even if only one figure is being amended. The figure or figure number of an amended drawing should not be labeled as "amended." If a drawing figure is to be canceled, the appropriate figure must be removed from the replacement sheet, and where necessary, the remaining figures must be renumbered and appropriate changes made to the brief description of the several views of the drawings for consistency. Additional replacement sheets may be necessary to show the renumbering of the remaining figures. If all the

figures on a drawing sheet are canceled, a replacement sheet is not required. A marked-up copy of the drawing sheet (labeled as "Annotated Sheet") including an annotation showing that all the figures on that drawing sheet have been canceled must be presented in the amendment or remarks section that explains the change to the drawings. Each drawing sheet submitted after the filing date of an application must be labeled in the top margin as either "Replacement Sheet" or "New Sheet" pursuant to 37 CFR 1.121(d). If the changes are not accepted by the examiner, the applicant will be notified and informed of any required corrective action in the next Office action.

Any inquiry concerning this communication or earlier communications from the examiner should be directed to Lisa P Lichtenstein whose telephone number is 571-272-2606. The examiner can normally be reached on Monday-Friday from 9:00 to 4:30.

If attempts to reach the examiner by telephone are unsuccessful, the examiner's supervisor, Ian Simmons, can be reached on 571-272-2658. The fax phone number for the organization where this application or proceeding is assigned is 703-872-9306.

Information regarding the status of an application may be obtained from the Patent Application Information Retrieval (PAIR) system. Status information for published applications may be obtained from either Private PAIR or Public PAIR. Status information for unpublished applications is available through Private PAIR only. For more information about the PAIR system, see http://pair-direct.uspto.gov. Should you have questions on access to the Private PAIR system, contact the Electronic Business Center (EBC) at 866-217-9197 (toll-free).

Lisa P Lichtenstein

Primary Examiner

Art Unit 2911

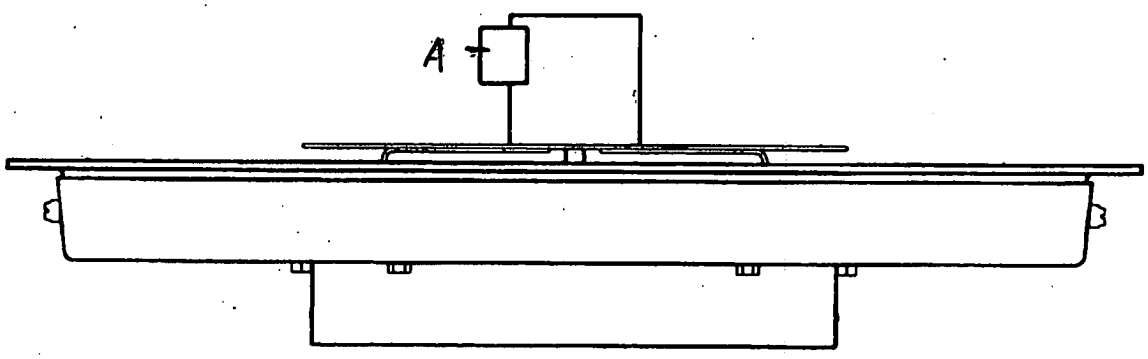

Fig. 3

29/249 244
Annotated Drawing Print

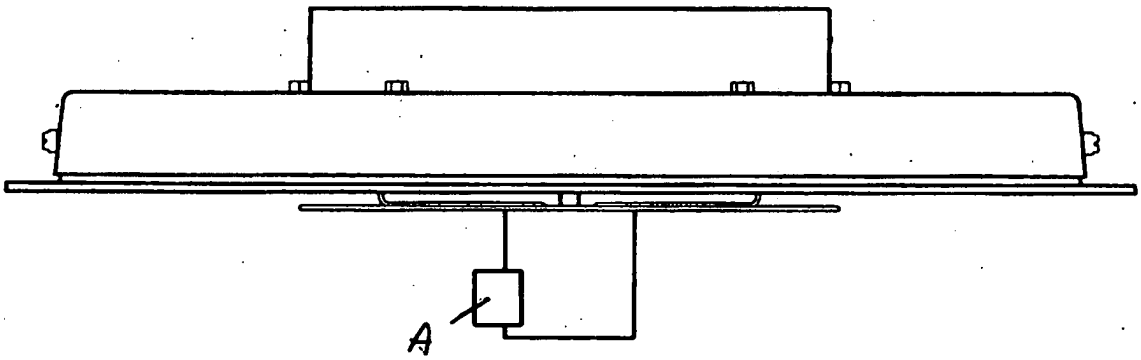

Fig. 4

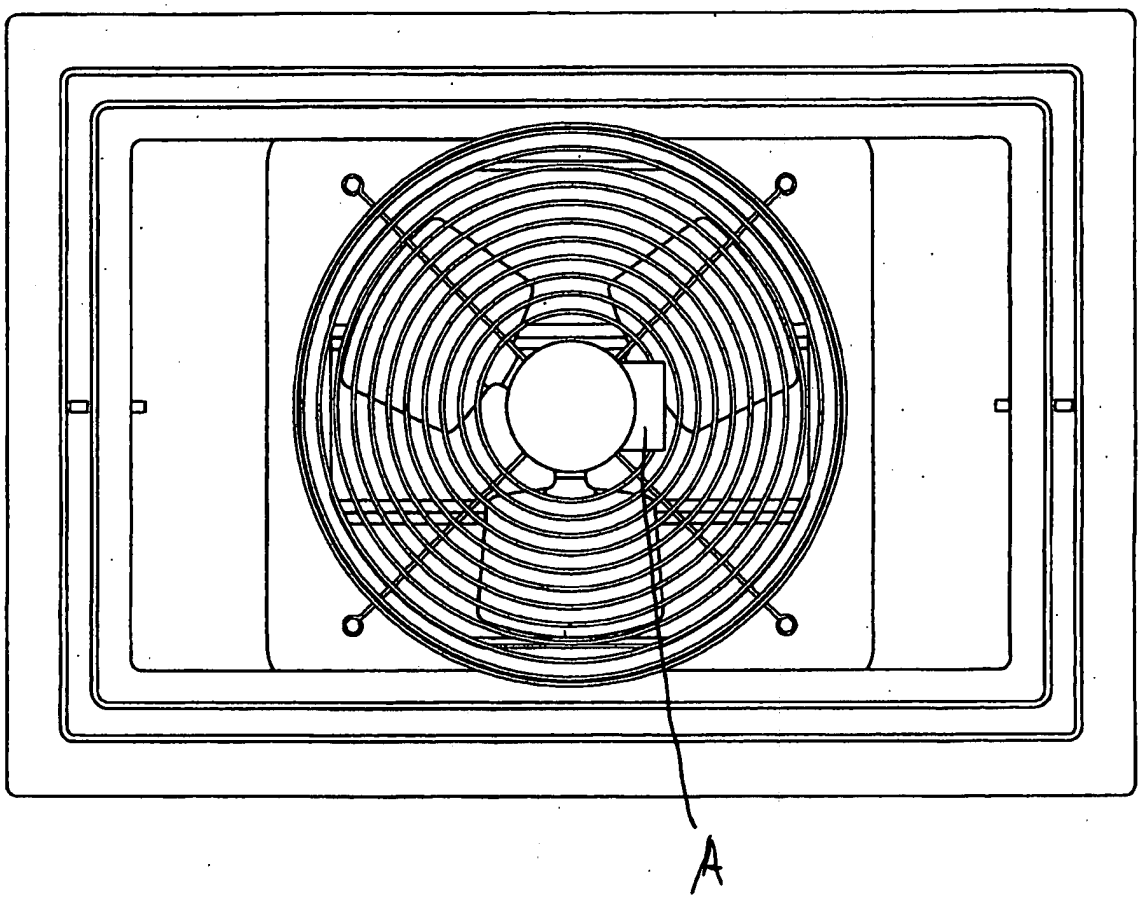

Fig. 7

UNITED STATES PATENT AND TRADEMARK OFFICE

Commissioner for Patents
United States Patent and Trademark Office
P.O. Box 1450
Alexandria, VA 22313-1450
www.uspto.gov

WILLIAMS G. SYKES
3669 SEAGULL BLUFF DRIVE
VIRGINIA BEACH VA 23455

COPY MAILED

NOV 2 4 2008

OFFICE OF PETITIONS

In re Application of :
Jackson, et al. :
Application No.: 29/240,244 : DECISION
Filing Date: 12 October, 2005 :
Attorney Docket No. 50704 :

This is a decision on the petition filed on 10 March, 2008, 2008, to revive an application under 37 C.F.R. §1.137(b) as having been abandoned due to unintentional delay.

The petition under 37 C.F.R. §1.137(b) is **DISMISSED**.

Any request for reconsideration of this decision must be submitted within TWO (2) MONTHS from the mail date of this decision. Extensions of time under 37 CFR §1.136(a) are permitted. The reconsideration request should include a cover letter entitled "Renewed Petition under 37 CFR §1.137(b)." This is **not** a final agency action within the meaning of 5 U.S.C. §704.

As to the Allegations
of Unintentional Delay

The requirements of a grantable petition pursuant to 37 C.F.R. §1.137(b) are the petition and fee therefor, a reply, a proper statement of unintentional delay under the regulation, and, where applicable, a terminal disclaimer and fee.

Petitioner does not appear to have submitted a terminal disclaimer and fee. Further, because Petitioner has submitted only one drawing and the Notice of Allowability speaks of replacement "drawings,[]" it is unclear whether Petitioner has satisfied that requirement of the Notice.

BACKGROUND

The record reflects that:

Petitioner failed to reply timely and properly to the Notice of Allowance/Allowability and Fees

Due (copy enclosed) mailed on 14 November, 2006, with reply due under a non-extendable deadline on or before 14 February, 2007.

The application went abandoned by operation of law after midnight 14 February, 2007.

The Office mailed a Notice of Abandonment on 30 March, 2007.

On 29 June, 2007, Petitioner filed the original petition requesting withdrawal of the holding of abandonment under 37 C.F.R. §1.181 with, *inter alia*, an averment that he did not receive a copy of the Notice of Allowance/Allowability and Fees Due, but:

- failed to make a statement of search, provide docket records for the instant application, and for the due date of the reply as set forth in the guidance of the Commentary at MPEP §711.03(c); and

- further averred that the Office action was mailed to the wrong address, however, a review of the record indicates that Petitioner directed the Office to mail correspondence to the address associated with Customer No. 50704–which appears on further examination to suggest that Petitioner incorrectly instructed the Office because that number is in fact Petitioner/Applicant's attorney registration number—and the petition was dismissed on 24 September, 2007.

The instant petition with fee and averring unintentional delay was filed on 10 March, 2008, with the fees due and one drawing submitted as the required reply and statement of unintentional delay, however, Petitioner failed to submit the required terminal disclaimer and fee and—because Petitioner has submitted a single sheet of drawings while the Notice of Allowability speaks to replacement drawings and drawing sheets—it is unclear whether Petitioner has satisfied this requirement of the Notice, and with any renewed petition Petitioner should be express as to his satisfaction of the requirement.

The availability of applications and application papers online to applicants/practitioners who diligently associate their Customer Number with the respective application(s) now provides an applicant/practitioner on-demand information as to events/transactions in an application. Thus, now if one wishes to know the progress in and/or status of an application or the accuracy of the data therein, one need only look at the file online.

Out of an abundance of caution, Petitioners always are reminded that those registered to practice *and* all others who make representations before the Office must inquire into the underlying facts of representations made to the Office and support averments with the appropriate documentation–since all owe to the Office the continuing duty to disclose.[1]

[1] See supplement of 17 June, 1999. The Patent and Trademark Office is relying on petitioner's duty of candor and good faith and accepting a statement made by Petitioner. See Changes to Patent Practice and Procedure, 62 Fed. Reg. at 53160 and 53178, 1203 Off. Gaz. Pat. Office at 88 and 103 (responses to comments 64 and 109)(applicant obligated under 37 C.F.R. §10.18 to inquire into the underlying facts and circumstances when providing statements to the Patent and Trademark Office). See specifically, the regulations at 37 C.F.R. §10.18.

STATUTES, REGULATIONS

Congress has authorized the Commissioner to "revive an application if the delay is shown to the satisfaction of the Commissioner to have been "unavoidable." 35 U.S.C. §133 (1994).

The regulations at 37 C.F.R. §1.137(a) and (b) set forth the requirements for a Petitioner to revive a previously unavoidably or unintentionally, respectively, abandoned application.[2,3]

CONCLUSION

The instant petition under 37 C.F.R. §1.137(b) is **dismissed**.

Further correspondence with respect to this matter should be addressed as follows:

By Mail:
Mail Stop PETITION
Commissioner for Patents
P. O. Box 1450
Alexandria, VA 22313-1450

By hand:
U. S. Patent and Trademark Office
Customer Service Window, Mail Stop Petitions
Randolph Building
401 Dulany Street
Alexandria, VA 22314

The centralized facsimile number is **(571) 273-8300.**

---

[2] See: Changes to Patent Practice and Procedure; Final Rule Notice, 62 Fed. Reg. at 53158-59 (October 10, 1997), 1203 Off. Gaz. Pat. Office at 86-87 (October 21, 1997).

[3] The language of 35 U.S.C. §133 and 37 C.F.R. §1.137(a) is clear, unambiguous, and without qualification: the delay in tendering the reply to the outstanding Office action, as well as filing the first petition seeking revival, must have been unavoidable for the reply now to be accepted on petition. (Therefore, by example, an unavoidable delay in the payment of the Filing Fee might occur if a reply is shipped by the US Postal Service, but due to catastrophic accident, the delivery is not made.) Delays in responding properly raise the question whether delays are unavoidable. Where there is a question whether the delay was unavoidable, Petitioners must meet the burden of establishing that the delay was unavoidable within the meaning of 35 U.S.C. §133 and 37 C.F.R. §1.137(a) And the Petitioner must be diligent in attending to the matter. Failure to do so does not constitute the care required under Pratt, and so cannot satisfy the test for diligence and due care. (By contrast, unintentional delays are those that do not satisfy the very strict statutory and regulatory requirements of unavoidable delay, and also, by definition, are not intentional.))

While telephone inquiries regarding this decision may be directed to the undersigned at (571) 272-3214, it is noted that all practice before the Office is in writing (see: 37 C.F.R. §1.2[4]) and the proper authority for action on any matter in this regard are the statutes (35 U.S.C.), regulations (37 C.F.R.) and the commentary on policy (MPEP). Therefore, no telephone discussion may be controlling or considered authority for Petitioner's action(s).

/John J. Gillon, Jr./
John J. Gillon, Jr.
Senior Attorney
Office of Petitions

[4] The regulations at 37 C.F.R. §1.2 provide:

§1.2 Business to be transacted in writing.

All business with the Patent and Trademark Office should be transacted in writing. The personal attendance of applicants or their attorneys or agents at the Patent and Trademark Office is unnecessary. The action of the Patent and Trademark Office will be based exclusively on the written record in the Office. No attention will be paid to any alleged oral promise, stipulation, or understanding in relation to which there is disagreement or doubt.

UNITED STATES PATENT AND TRADEMARK OFFICE

Commissioner for Patents
United States Patent and Trademark Office
P.O. Box 1450
Alexandria, VA 22313-1450
www.uspto.gov

WILLIAMS G. SYKES
3669 SEAGULL BLUFF DRIVE
VIRGINIA BEACH VA 23455

COPY MAILED

MAR 2 3 2009

OFFICE OF PETITIONS

In re Application of :
Jackson, et al. :
Application No.: 29/240,244 : DECISION
Filing Date: 12 October, 2005 :
Attorney Docket No. 50704 :

This is a decision on the petition filed on 12 January, 2009, to revive an application under 37 C.F.R. §1.137(b) as having been abandoned due to unintentional delay.

The petition as considered under 37 C.F.R. §1.137(b) is **GRANTED**.

As to Allegations of
Unintentional Delay

The requirements of a grantable petition pursuant to 37 C.F.R. §1.137(b) are the petition and fee therefor, a reply, a proper statement of unintentional delay under the regulation, and, where applicable, a terminal disclaimer and fee for, *inter alia*, a design application.

BACKGROUND

The record reflects that:

Petitioner failed to reply timely and properly to the Notice of Allowance/Allowability and Fees Due mailed on 14 November, 2006, with reply due under a non-extendable deadline on or before 14 February, 2007.

The application went abandoned by operation of law after midnight 14 February, 2007.

The Office mailed a Notice of Abandonment on 30 March, 2007.

On 29 June, 2007, Petitioner filed the original petition requesting withdrawal of the holding of

abandonment under 37 C.F.R. §1.181 with, *inter alia*, an averment that he did not receive a copy of the Notice of Allowance/Allowability and Fees Due, but:

- failed to make a statement of search, provide docket records for the instant application, and for the due date of the reply as set forth in the guidance of the Commentary at MPEP §711.03(c); and

- while Petitioner further averred that the Office action was mailed to the wrong address, however, a review of the record indicates that Petitioner directed the Office to mail correspondence to the address associated with Customer No. 50704–which appears on further examination to suggest that Petitioner incorrectly instructed the Office because that number is in fact Petitioner/Applicant's attorney registration number—and the petition was dismissed on 24 September, 2007.

On 10 March, 2008, Petitioner filed a petition (with fee) pursuant to 37 C.F.R. §1.137(b), *inter alia*, a reply in the form of fees due and one drawing submitted as the required reply and statement of unintentional delay, however, because Petitioner submitted a single sheet of drawings while the Notice of Allowability speaks to replacement drawings and drawing sheets, it was unclear whether Petitioner satisfied this requirement of the Notice, and the petition was dismissed on 24 November, 2008, with request that Petitioner be express as to his satisfaction of the requirement.

On 12 January, 2009, Petitioner filed, *inter alia*, a petition pursuant to 37 C.F.R. §1.137(b), averring unintentional delay (fee previously submitted), a reply in the form of drawing(s) and a showing of complete reply, and made the statement of unintentional delay.

The terminal disclaimer filed on 10 March, 2008, under 37 C.F.R. §1.137(d) is acknowledged/accepted.[1]

The availability of applications and application papers online to applicants/practitioners who diligently associate their Customer Number with the respective application(s) now provides an applicant/practitioner on-demand information as to events/transactions in an application.

Out of an abundance of caution, Petitioners always are reminded that those registered to practice and all others who make representations before the Office are reminded to inquire into the underlying facts of representations made to the Office and support averments with the appropriate documentation–since all owe to the Office the continuing duty to disclose.[2]

---

[1] The regulations at 37 C.F.R. §1.137(d)(1) state that a terminal disclaimer filed pursuant to this rule must dedicate to the public a terminal part of the term of any patent granted thereon equivalent to the lesser of: 1) the period of abandonment of the application; or 2) the period extending beyond twenty years from the date on which the application for the patent was filed in the United States, or, if the application contains a specific reference to an earlier filed application(s) under 35 U.S.C. 120, 121 or 365(c), from the date on which the earliest such application was filed. Effective 20 September, 2000 (65 Fed. Reg. 54674, 8 September, 2000).

[2] See supplement of 17 June, 1999. The Patent and Trademark Office is relying on petitioner's duty of candor and good faith and accepting a statement made by Petitioner. See Changes to Patent Practice and Procedure, 62 Fed. Reg. at 53160 and 53178, 1203 Off. Gaz. Pat. Office at 88 and 103 (responses to comments 64 and 109)(applicant obligated under 37 C.F.R. §10.18 to inquire into the underlying facts and circumstances when providing statements to the Patent and Trademark Office).

STATUTES, REGULATIONS AND ANALYSIS

Congress has authorized the Commissioner to "revive an application if the delay is shown to the satisfaction of the Commissioner to have been "unavoidable." 35 U.S.C. §133 (1994).[3] The regulations at 37 C.F.R. §1.137(a) and (b) set forth the requirements for a Petitioner to revive a previously unavoidably or unintentionally, respectively, abandoned application under this congressional grant of authority.

Unintentional delays are those that do not satisfy the very strict statutory and regulatory requirements of unavoidable delay, and also, by definition, are not intentional.[4]))

As to Allegations of
Unintentional Delay

It appears that the requirements under 37 C.F.R. §1.137(b) have been satisfied.

CONCLUSION

Accordingly, the petition under 37 C.F.R. §1.137(b) is **granted**.

The instant application is released to Office of Data Management (ODM) to be processed into a patent in due course.

Petitioner may find it beneficial to view Private PAIR within a fortnight of the instant decision to ensure that the revival has been acknowledged by the ODM in response to this decision. It is noted that all inquiries with regard to that change in status need be directed to the ODM where that change of status must be effected—that does not occur in the Office of Petitions.

---

[3] 35 U.S.C. §133 provides:

35 U.S.C. §133 Time for prosecuting application.

Upon failure of the applicant to prosecute the application within six months after any action therein, of which notice has been given or mailed to the applicant, or within such shorter time, not less than thirty days, as fixed by the Commissioner in such action, the application shall be regarded as abandoned by the parties thereto, unless it be shown to the satisfaction of the Commissioner that such delay was unavoidable.

[4] Therefore, by example, an unintentional delay in the reply might occur if the reply and transmittal form are to be prepared for shipment by the US Postal Service, but other pressing matters distract one's attention and the mail is not timely deposited for shipment.

Telephone inquiries regarding this decision may be directed to the undersigned at (571) 272-3214—it is noted, however, that all practice before the Office is in writing (see: 37 C.F.R. §1.2[5]) and the proper authority for action on any matter in this regard are the statutes (35 U.S.C.), regulations (37 C.F.R.) and the commentary on policy (MPEP). Therefore, no telephone discussion may be controlling or considered authority for Petitioner's action(s).

/John J. Gillon, Jr./
John J. Gillon, Jr.
Senior Attorney
Office of Petitions

[5] The regulations at 37 C.F.R. §1.2 provide:

§1.2 Business to be transacted in writing.

All business with the Patent and Trademark Office should be transacted in writing. The personal attendance of applicants or their attorneys or agents at the Patent and Trademark Office is unnecessary. The action of the Patent and Trademark Office will be based exclusively on the written record in the Office. No attention will be paid to any alleged oral promise, stipulation, or understanding in relation to which there is disagreement or doubt.

UNITED STATES PATENT AND TRADEMARK OFFICE

Commissioner for Patents
United States Patent and Trademark Office
P.O. Box 1450
Alexandria, VA 22313-1450
www.uspto.gov

William G. Sykes
3669 Seagull Bluff Drive
Virginia Beach VA 23455

COPY MAILED

SEP 17 2007

OFFICE OF PETITIONS

In re Application of
Jackson et al
Application No. 29/240,255
Filed: October 12, 2005
Title: Crawlspace Fema Flood Louver

ON PETITION

This is a decision on the petition under 37 CFR 1.181 to withdraw the holding of abandonment, filed August 27, 2007.

The petition to withdraw the holding of abandonment is **Dismissed**.

Any request for reconsideration should be filed within **TWO MONTHS** of the mailing date of this decision in order to be considered timely. 37 CFR 1.181(f). This time period may not be extended pursuant to 37 CFR 1.136.

This application was held abandoned January 6, 2007 for failure to timely reply to the non- final Office Action mailed on October 5, 2006. The non-final Office Action set a three (3) month extendable time period for reply. A Notice of Abandonment was mailed May 4, 2007.

Petitioner contends the Office Action mailed on October 5, 2006 was not received because it was mailed to the incorrect correspondence address.

Petitioner's argument has been considered but deemed unpersuasive. A review of the record shows that the Notice was properly mailed to the correspondence address of record. On filing petitioner requested that all correspondence for the above-identified application be sent to customer no. 50704. The request to send correspondence to the address associated with customer no. 50704 is present in both the declaration and the

transmittal letter. Customer no. 50704 is associated with the New York address where the correspondence was mailed. Further review shows that petitioner has confused his registration number with a customer number. Such a mistake while unfortunate, does not warrant the withdrawal of the holding of abandonment.

In the alternative, petitioner may wish to file a petition under 37 CFR 1.137(b). Petitioner is reminded that a terminal disclaimer and the $130 ($65 for small entity) terminal disclaimer fee is required under 37 CFR 1.137(c) if the application is: (1) a design application, (2) a utility application filed before June 8, 1995, or (3) a plant application filed before June 8, 1995.

Further correspondence with respect to this matter should be addressed as follows:

By mail:	Mail Stop Petition Commissioner for Patents P.O. Box 1450 Alexandria, VA 22313-1450
By facsimile:	(571) 273-8300
By delivery service: (FedEx, UPS, DHL, etc.)	U.S. Patent and Trademark Office Customer Service Window, Randolph Building 401 Dulany Street Alexandria, VA 22314

Telephone inquiries concerning this matter should be directed to the undersigned at (571) 272-3215.

Charlema R. Grant

Charlema R. Grant
Petitions Attorney
Office of Petitions

UNITED STATES PATENT AND TRADEMARK OFFICE

Commissioner for Patents
United States Patent and Trademark Office
P.O. Box 1450
Alexandria, VA 22313-1450
www.uspto.gov

William G. Sykes
3669 Seagull Bluff Drive
Virginia Beach VA 23455

COPY MAILED

JUN 1 8 2008

In re Application of :
Jackson et al. :
Application No. 29/240,255 : ON PETITION
Filed: October 12, 2005 :
Attorney Docket No. 50704 :

This is a decision on the petition under the unintentional provisions of 37 CFR 1.137(b), filed April 21, 2008, to revive the above-identified application.

The petition is **DISMISSED.**

Any request for reconsideration of this decision must be submitted within TWO (2) MONTHS from the mail date of this decision. Extensions of time under 37 CFR 1.136(a) are permitted. The reconsideration request should include a cover letter entitled "Renewed Petition under 37 CFR 1.137(b)." This is **not** a final agency action within the meaning of 5 U.S.C. § 704.

This application was held abandoned January 6, 2007 for failure to timely reply to the non- final Office Action mailed on October 5, 2006. The non-final Office Action set a three (3) month extendable time period for reply. A Notice of Abandonment was mailed May 4, 2007.

A grantable petition under 37 CFR 1.137(b) must be accompanied by: (1) the required reply, unless previously filed; (2) the petition fee as set forth in 37 CFR 1.17(m); (3) a statement that the entire delay in filing the required reply from the due date for the reply until the filing of a grantable petition pursuant to 37 CFR 1.137(b) was unintentional; and (4) any terminal disclaimer (and fee as set forth in 37 CFR 1.20(d)) required by 37 CFR 1.137(d). Where there is a question as to whether either the abandonment or the delay in filing a petition under 37 CFR 1.137 was unintentional, the Director may require additional information. See MPEP 711.03(c)(II)(C) and (D). The instant petition lacks item(s) 4.

Petitioner has failed to meet item (4). The terminal disclaimer as signed by attorney Sykes is not proper. To the extent attorney Sykes is signing the terminal disclaimer as an attorney , a review of the record shows power of attorney has not been granted. The power of attorney filed October 29, 2007 was not entered because the co-inventor did not execute the document. As such attorney Sykes is prosecuting under 37 CFR 1.34. An attorney acting in representative capacity pursuant to 37 CFR 1.34 cannot sign a terminal disclaimer. See MPEP 402. To the extent petitioner is signing as a co-inventor of the application, the signature of all applicants must be presented on the terminal disclaimer.

Further correspondence with respect to this matter should be addressed as follows:

By Mail: Mail Stop PETITION
Commissioner for Patents
P. O. Box 1450
Alexandria, VA 22313-1450

By hand: U. S. Patent and Trademark Office
Customer Service Window, Mail Stop Petitions
Randolph Building
401 Dulany Street
Alexandria, VA 22314

The centralized facsimile number is **(571) 273-8300.**

Telephone inquiries concerning this decision should be directed to the undersigned at (571) 272-3215.

Charlema Grant
Petitions Attorney
Office of Petitions

Best Available Copy

UNITED STATES PATENT AND TRADEMARK OFFICE

Commissioner for Patents
United States Patent and Trademark Office
P.O. Box 1450
Alexandria, VA 22313-1450
www.uspto.gov

William G. Sykes
3669 Seagull Bluff Drive
Virginia Beach VA 23455

COPY MAILED

SEP 15 2008

In re Application of :
Jackson et al. :
Application No. 29/240,255 : ON PETITION
Filed: October 12, 2005 :
Attorney Docket No. 50704 :

This is a decision on the petition under 37 CFR 1.137(b), filed July 14, 2008, to revive the above-identified design application.

The petition is **GRANTED**.

The petition satisfies the requirements of 37 CFR 1.137(b) in that petitioner has supplied (1) the reply in the form of a Amendment, Drawings and Specification ; (2) the petition fee of 770; (3) a proper statement of unintentional delay; and (4) a terminal disclaimer and fee as required by 37 CFR 1.137(d).

The terminal disclaimer is accepted and has been made of record.

Telephone inquiries concerning this decision should be directed to the undersigned at (571) 272-3215.

This application is being referred to Technology Center AU 2914 for appropriate action by the Examiner in the normal course of business on the reply received

Charlema Grant
Petitions Attorney
Office of Petitions

UNITED STATES PATENT AND TRADEMARK OFFICE

Commissioner for Patents
United States Patent and Trademark Office
P.O. Box 1450
Alexandria, VA 22313-1450
www.uspto.gov

CANTOR COLBURN, LLP
55 GRIFFIN ROAD SOUTH
BLOOMFIELD CT 06002

COPY MAILED

AUG 17 2007

OFFICE OF PETITIONS

In re Patent No. D537808 :
Issue Date: 03/06/2007 :
Application No. 29/240276 : ON PETITION
Filed: 10/11/2005 :
Attorney Docket No. 5TI-0041 :

This is a decision on the petition filed May 21, 2007, which is being treated as a request under 37 CFR 3.81(b)[1] to correct the name of the assignee on the front page of the above-identified patent by way of a Certificate of Correction.

The request is **GRANTED**.

The $100.00 Certificate of Correction fee will be charged to the Deposit Account, as requested.

Telephone inquiries concerning this decision may be directed to the undersigned at (571) 272-3211. Inquiries regarding the issuance of a certificate of correction should be directed to the Certificate of Correction Branch at (571) 272-4200.

The Certificates of Correction Branch will be notified of this decision granting the petition under 37 CFR 3.81(b) and directing issuance of the requested Certificate of Correction.

Christina Tartera Donnell

Christina Tartera Donnell
Senior Petitions Attorney
Office of Petitions

[1] *See* MPEP 1309, subsection II; and Official Gazette of June 22, 2004.

PTOISB/27 (09-04)
Approved for use through 07/31/2006. 0MB 0651-0031
U.S. Patent and Trademark Office; U.S DEPARTMENT OF COMMERCE
Under the Paperwork Reduction ACT of 1995, no persons are required to respond to collection of information unless it displays a valid 0MB control number.

REQUEST FOR EXPEDITED EXAMINATION OF A DESIGN APPLICATION (37 CFR 1.155)

Application Number	To be assigned
Filing Date	To be assigned
First Named Inventor	
Title	PORTION OF A SHOE UPPER
Attorney Docket Number	2465-7395US

ADDRESS TO:

MAIL STOP EXPEDITED DESIGN
COMMISSION FOR PATENTS
P.O. BOX 1450
Alexandria, VA 22313-1450

Approved 11/9/05
Jacqueline M. Stone
Jacqueline M. Stone, Director
Technology Center 1700

113006 U.S. PTO
29/240315
101105

This is a request for expedited examination of a design application under 37 CER 1.155.

NOTE: If the Request made by this form accompanies original application papers, include form PTO/SB/18 "Design Patent Application Transmittal" or its equivalent.

A preexamination search was conducted. The field of search was:

US. CL. D2/896, D2/897, D2/902, D2/907, D2/908, D2/910 D2/911, D2/912, D2/916, D2/922, D2/935, D2/969, D2/970, D2/971, D2/972, 36/45, 36/50.1, 36/83, 36/88, 36/89, 36/93, 36/101, 36/102, 36/103, 36/104, 36/106, 36/108, 36/109, 36/113, 36/114, 36/115, 36/116, 36/126, 36/127, 36/128, 36/129, 36/130

Related applications: _____

If not previously filed for the above-identified application, the following items required by 37 CFR 1.155 are enclosed:

- Formal drawings (see 37 CFR 1.84).
- The fee set forth in 37 CFR 1.17(k).
- An information disclosure statement in compliance with 37 CFR 1.98.

Signature

11 OCT. 2005
Date

Laurence B. Bond
Typed or printed name

30,549
Registration Number, if applicable

(801) 532-1922
Telephone Number

WARNING: Information on this form may become public. Credit card information should not be included on this form. Provide credit card information and authorization on PTO-2038.

This collection of information is required by37 CFR 1.155. The information is required to obtain or retain a benefit by the public which is to file (and by the USPTO to process) an application. Confidentiality is governed by 35 U.S.C. 122 and 37 CFR 1.11 and 1.14. This collection is estimated to take 6 minutes to complete, including gathering, preparing, and submitting the completed application form to the USPTO. Time will vary depending upon the individual case. Any comments on the amount of time you require to complete this form and/or suggestions for reducing this burden, should be sent to the Chief Information Officer, U.S. Patent and Trademark Office, U.S. Department of Commerce, P.O. Box 1450, Alexandria, VA 22313-1450. DO NOT SEND FEES OR COMPLETED FORMS TO THIS ADDRESS. SEND TO: Commissioner for Patents, P.O. Box 1450, Alexandria, VA 22343-1450.
If you need assistance in completing the form, call 1-800-PTO-9199 and select option 2.

10/14/2005 MAHMED1 00000080 201469 29240315

04 FC:1802 900.00 DA

UNITED STATES PATENT AND TRADEMARK OFFICE

Commissioner for Patents
United States Patent and Trademark Office
P.O. Box 1450
Alexandria, VA 22313-1450
www.uspto.gov

THE PROCTER & GAMBLE COMPANY
Global Legal Department - IP
Sycamore Building - 4th Floor
299 East Sixth Street
CINCINNATI OH 45202

COPY MAILED

SEP 08 2008

OFFICE OF PETITIONS

In re Application of
Gary Richard **Ashe**
Application No. 29/240,342
Filed: October 12, 2005
Attorney Docket No.

: DECISION ON PETITION

This is a decision on the petition under the unintentional provisions of 37 CFR 1.137(b), filed November 9, 2007, to revive the above-identified application.

The petition is DISMISSED.

Any request for reconsideration of this decision must be submitted within TWO (2) MONTHS from the mail date of this decision. Extensions of time under 37 CFR 1.136(a) are permitted. The reconsideration request should include a cover letter entitled "Renewed Petition under 37 CFR 1.137(b)." This is not a final agency action within the meaning of 5 U.S.C. § 704.

The application became abandoned for failure to pay the issue and publication fees on or before June 22, 2007, as required by the Notice of Allowance and Fee(s) Due, mailed March 22, 2007, which set a statutory period for reply of three (3) months. Accordingly, the application became abandoned on June 23, 2007.

A grantable petition under 37 CFR 1.137(b) must be accompanied by: (1) the required reply, unless previously filed; (2) the petition fee as set forth in 37 CFR 1.17(m); (3) a statement that the entire delay in filing the required reply from the due date for the reply until the filing of a grantable petition pursuant to 37 CFR 1.137(b) was unintentional; and (4) any terminal disclaimer (and fee as set forth in 37 CFR 1.20(d)) required by 37 CFR 1.137(d). Where there is a question as to whether either the abandonment or the delay in filing a petition under 37 CFR 1.137 was unintentional, the Director may require additional information. See MPEP 711.03(c)(II)(C) and (D). The instant petition lacks item 4.

A Terminal Disclaimer (and fee as set forth in 37 CFR 1.20(d)) required by 37 CFR 1.137(d) are required.

The file does not indicate a change of address has been submitted, although the address given on the petition differs from the address of record. If appropriate, a change of address should be filed in accordance with MPEP 601.03. A courtesy copy of this decision is being mailed to the address given on the petition; however, the Office will mail all future correspondence solely to the address of record.

Further correspondence with respect to this matter should be addressed as follows:

By Mail: Mail Stop PETITION
Commissioner for Patents
P. O. Box 1450
Alexandria, VA 22313-1450

By hand: U. S. Patent and Trademark Office
Customer Service Window, Mail Stop Petitions
Randolph Building
401 Dulany Street
Alexandria, VA 22314

The centralized facsimile number is (571) 273-8300.

Telephone inquiries concerning this decision should be directed to Phyllis Spivack at 571-272-6052 or in her absence, the undersigned at (571) 272-7099.

David Bucci
Petitions Examiner
Office of Petitions

cc: The Proctor & Gamble Company
Intellectual Property Division
Winton Hill Business Center – Box 161
Cincinnati, OH 45224

UNITED STATES PATENT AND TRADEMARK OFFICE

COMMISSIONER FOR PATENTS
UNITED STATES PATENT AND TRADEMARK OFFICE
P.O. BOX 1450
ALEXANDRIA, VA 22313-1450
www.uspto.gov

THE PROCTER & GAMBLE COMPANY
Global Legal Department - IP
Sycamore Building - 4th Floor
299 East Sixth Street
CINCINNATI OH 45202

COPY MAILED

JAN 12 2009

OFFICE OF PETITIONS

In re Application of :
Gary R. ASHE :
Application No. 29/240,342 : DECISION ON PETITION
Filed: October 12, 2005 :
Attorney Docket No. CD563F :

This is a decision on the renewed petition under 37 CFR 1.137(b), filed October 15, 2008, to revive the above-identified design application.

The petition is **GRANTED**.

The application became abandoned for failure to timely pay the issue fee on or before June 22, 2007, as required by the Notice of Allowance and Fee(s) Due, mailed March 22, 2007, which set a statutory period for reply of three (3) months. Accordingly, the application became abandoned on June 23, 2007. A Notice of Abandonment was mailed on September 27, 2007.

The petition satisfies the requirements of 37 CFR 1.137(b) in that petitioner has supplied (1) the reply in the form of the $820 issue fee and corrected drawings, (2) the petition fee of $1540, (3) a proper statement of unintentional delay, and (4) a terminal disclaimer and fee as required by 37 CFR 1.137(d). Accordingly, the failure to timely pay the issue fee as required by the Notice of Allowance and Fee(s) Due, mailed March 22, 2007 is accepted as being unintentionally delayed.

The terminal disclaimer is accepted and has been made of record. Any continuing application filed from this application must contain a copy of the terminal disclaimer. The copy of the terminal disclaimer must be filed with a cover letter requesting the terminal disclaimer be recorded on the continuing application. A copy of this decision should be attached to the cover letter.

A fee of $1620 for the renewed petition was debited to petitioner's deposit account. Since the petition fee need only be paid once, the $1620 fee charged with respect to thereto is unnecessary and will be credited to petitioner's deposit account.

Telephone inquiries concerning this decision should be directed to K. Reichle at (571) 272-6051.

This application is being referred to Publishing Division for further processing in accordance with this decision on petition.

for David Bucci
Petitions Examiner
Office of Petitions

PTO/SB/27 (09-04)
Approved for use through 07/31/2006. OMB 0651-0031
U.S. Patent and Trademark Office; U.S DEPARTMENT OF COMMERCE
Under the Paperwork Reduction ACT of 1995, no persons are required to respond to collection of information unless it displays a valid OMB control number.

REQUEST FOR EXPEDITED EXAMINATION OF A DESIGN APPLICATION (37 CFR 1.155)

Application Number	To be assigned
Filing Date	To be assigned
First Named Inventor	N. Scot Hull
Title	PORTION OF A SHOE UPPER
Attorney Docket Number	2465-7396US

113000 U.S.PTO 29/240393 101205

ADDRESS TO:
MAIL STOP EXPEDITED DESIGN
COMMISSION FOR PATENTS
P.O. BOX 1450
Alexandria, VA 22313-1450

Approved 11-9-05
Jacqueline M. Stone
Jacqueline M. Stone, Director
Technology Center 1700

This is a request for expedited examination of a design application under 37 CER 1.155.

NOTE: If the Request made by this form accompanies original application papers, include form PTO/SB/18 "Design Patent Application Transmittal" or its equivalent.

A preexamination search was conducted. The field of search was:

US. CL. D2/896, D2/897, D2/902, D2/907, D2/908, D2/910 D2/911, D2/912, D2/916, D2/922, D2/935, D2/969, D2/970, D2/971, D2/972, 36/45, 36/50.1, 36/83, 36/88, 36/89, 36/93, 36/101, 36/102, 36/103, 36/104, 36/106, 36/108, 36/109, 36/113, 36/114, 36/115, 36/116, 36/126, 36/127, 36/128, 36/129, 36/130

Related applications: _____

If not previously filed for the above-identified application, the following items required by 37 CFR 1.155 are enclosed:

- Formal drawings (see 37 CFR 1.84).
- The fee set forth in 37 CFR 1.17(k).
- An information disclosure statement in compliance with 37 CFR 1.98.

Signature — October 12, 2005 (Date)

Laurence B. Bond (Typed or printed name) — 30,549 (Registration Number, if applicable)

(801) 532-1922 (Telephone Number)

WARNING: Information on this form may become public. Credit card information should not be included on this form. Provide credit card information and authorization on PTO-2038.

This collection of information is required by37 CFR 1.155. The information is required to obtain or retain a benefit by the public which is to file (and by the USPTO to process) an application. Confidentiality is governed by 35 U.S.C. 122 and 37 CFR 1.11 and 1.14. This collection is estimated to take 6 minutes to complete, including gathering, preparing, and submitting the completed application form to the USPTO. Time will vary depending upon the individual case. Any comments on the amount of time you require to complete this form and/or suggestions for reducing this burden, should be sent to the Chief Information Officer, U.S. Patent and Trademark Office, U.S. Department of Commerce, P.O. Box 1450, Alexandria, VA 22313-1450. DO NOT SEND FEES OR COMPLETED FORMS TO THIS ADDRESS. SEND TO: **Commissioner for Patents, P.O. Box 1450, Alexandria, VA 22343-1450.**
If you need* assistance *in completing the form, call 1-800-PTO-9199* and select *option 2.

10/17/2005 MAHMED1 00000034 201469 29240393
04 FC:1802 900.00 DA

UNITED STATES PATENT AND TRADEMARK OFFICE

Commissioner for Patents
United States Patent and Trademark Office
P.O. Box 1450
Alexandria, VA 22313-1450
www.uspto.gov

COPY MAILED

DEC 12 2006

OFFICE OF PETITIONS

DAVIDSON, DAVIDSON & KAPPEL, LLC
485 SEVENTH AVENUE, 14TH FLOOR
NEW YORK, NY 10018

In re Application of
AGLASSINGER, et al.
Application No. 29/240,395
Filed: October 12, 2005
Attorney Docket No. 5050.1008

DECISION ON REQUEST FOR REVOCATION OF POWER OF ATTORNEY

This is a decision on the Request to Revoke the attorney or agent of record under 37 C.F.R. § 1.36(a), filed October 10, 2006.

The request is **APPROVED**.

A power of attorney, pursuant to § 1.32(b), may be revoked at any stage in the proceeding of a case by an applicant for patent (§ 1.41(b)) or an assignee of the entire interest of the applicant under § 3.71(b). Fewer than all of the applicants (or by fewer than the assignee of the entire interest of the applicant) may only revoke the power of attorney upon a showing of sufficient cause, and payment of the petition fee set forth § 1.17(h). For the assignee to take action a proper statement under § 3.73(b) is required.

The correspondence address of record has been changed and the new correspondence address is the address indicated below.

Telephone inquiries concerning this decision should be directed to the undersigned at 571-272-7253.

Monica A. Graves
Petitions Examiner
Office of Petitions

cc: **DARBY & DARBY P.C.**
P. O. BOX 5257
NEW YORK NY 10150-5257

UNITED STATES PATENT AND TRADEMARK OFFICE

Commissioner for Patents
United States Patent and Trademark Office
P.O. Box 1450
Alexandria, VA 22313-1450
www.uspto.gov

PAUL J. SUTTON, ESQ., BARRY G. MAGIDOFF, ESQ.
GREENBERG TRAURIG, LLP
200 PARK AVENUE
NEW YORK NY 10166

COPY MAILED
JUL 27 2006
OFFICE OF PETITIONS

In re Application of :
Merritt, et al. :
Application No. 29/240,416 : ON PETITION
Filed: October 11, 2005 :
Attorney Docket No. 0267-001-2117DES-E :

This decision addresses the petition under 37 CFR 1.47(a), filed June 9, 2006.

The petition is **GRANTED.**

Petitioners have shown that the non-signing inventor, Damon Bruccoleri, has constructively refused to join in the filing of the above-identified application. The statement of facts of Paralegal Augusta D. Rogers establish that Mr. Bruccoleri was mailed, *inter alia*, a copy of the application and declaration, but he did not return an executed declaration.

Regarding fees, the required five month extension of time and surcharge have been charged to deposit account no. 50-1561. Pursuant to petitioner's authorization, deposit account no. 50-1561 will be charged a $200.00 petition fee.

The application and papers have been reviewed and found in compliance with 37 CFR 1.47(a). This application is hereby accorded Rule 1.47(a) status.

As provided in 37 CFR 1.47(c), this Office will forward notice of this application's filing to the non-signing inventor at the address given in the petition. Notice of the filing of this application will also be published in the Official Gazette.

After the mailing of this decision, the application will be forwarded to Technology Center Art Unit 2913 for examination in due course.

Telephone inquiries regarding this decision should be directed to the undersigned at (571) 272-3230.

Shirene Willis Brantley

Shirene Willis Brantley
Senior Petitions Attorney
Office of Petitions

SPE RESPONSE FOR CERTIFICATE OF CORRECTION

Paper No.: X

DATE : June 02, 2008

TO SPE OF : ART UNIT 2912

SUBJECT : Request for Certificate of Correction for Appl. No.: 29/240416 Patent No.: D553102 S

A response is requested with respect to a request for a certificate of correction.

With respect to the change(s) requested to correct Office and/or Applicant's errors, should the patent read as shown in the certificate of correction attached herewith or the COCIN document(s), in IFW images for the above-identified patented application? No new matter should be introduced, nor should the scope or meaning of the claims be changed.

If the response is for an IFW, within **7** days, please complete and forward the response, to the employee (named below) via scanning into application images, using document code **COCX**.

DO NOT SENT TO ATTORNEY

If the response is for a paper file wrapper, please complete the response and forward the response with the paper file wrapper, to the employee (named below), within **7** days, to:

Certificates of Correction Branch (CofC)
South Tower - 9A22
Palm Location 7580

You can fax the Directors/SPE response to 571-270-9990

LAMONTE NEWSOME
Certificates of Correction Branch
703-308-9390 ext. 112

Thank You For Your Assistance

The request for issuing the above-identified correction(s) is hereby:
Note your decision on the appropriate box.

☐ **Approved**	**All** changes apply.
☐ **Approved in Part**	Specify below which changes **do not** apply.
☐ **Denied**	State the reasons for denial below.

Comments: above correction is approved

SPE RESPONSE FOR CERTIFICATE OF CORRECTION

Paper No.: X

DATE : June 02, 2008

TO SPE OF : ART UNIT 2912

SUBJECT : Request for Certificate of Correction for Appl. No.: 29/240416 Patent No.: D553102 S

A response is requested with respect to a request for a certificate of correction.

With respect to the change(s) requested to correct Office and/or Applicant's errors, should the patent read as shown in the certificate of correction attached herewith or the COCIN document(s), in IFW images for the above-identified patented application? No new matter should be introduced, nor should the scope or meaning of the claims be changed.

If the response is for an IFW, within 7 days, please complete and forward the response, to the employee (named below) via scanning into application images, using document code **COCX**.

DO NOT SENT TO ATTORNEY

If the response is for a paper file wrapper, please complete the response and forward the response with the paper file wrapper, to the employee (named below), within **7** days, to:

Certificates of Correction Branch (CofC)
South Tower - 9A22
Palm Location 7580

You can fax the Directors/SPE response to 571-270-9990

LAMONTE NEWSOME
Certificates of Correction Branch
703-308-9390 ext. 112

Thank You For Your Assistance

The request for issuing the above-identified correction(s) is hereby:

Note your decision on the appropriate box.

- ☑ **Approved** — **All** changes apply.
- ☐ **Approved in Part** — Specify below which changes **do not** apply.
- ☐ **Denied** — State the reasons for denial below.

Comments: above correction is approved

STELLA M. REID
SUPERVISORY PATENT EXAMINER Art Unit 2912

UNITED STATES PATENT AND TRADEMARK OFFICE

Commissioner for Patents
United States Patent and Trademark Office
P.O. Box 1450
Alexandria, VA 22313-1450
www.uspto.gov

PAUL J. SUTTON, ESQ., BARRY G. MAGIDOFF, ESQ.
GREENBERG TRAURIG, LLP
200 PARK AVENUE
NEW YORK NY 10166

COPY MAILED
JUL 27 2006
OFFICE OF PETITIONS

In re Application of :
Merritt, et al. :
Application No. 29/240,417 : ON PETITION
Filed: October 11, 2005 :
Attorney Docket No. 0267-001-2117DES-C :

This decision addresses the petition under 37 CFR 1.47(a), filed June 9, 2006.

The petition is **GRANTED.**

Petitioners have shown that the non-signing inventor, Damon Bruccoleri, has constructively refused to join in the filing of the above-identified application. The statement of facts of Paralegal Augusta D. Rogers establish that Mr. Bruccoleri was mailed, *inter alia*, a copy of the application and declaration, but he did not return an executed declaration.

Regarding fees, the required five month extension of time and surcharge have been charged to deposit account no. 50-1561. Pursuant to petitioner's authorization, deposit account no. 50-1561 will be charged a $200.00 petition fee.

The application and papers have been reviewed and found in compliance with 37 CFR 1.47(a). This application is hereby accorded Rule 1.47(a) status.

As provided in 37 CFR 1.47(c), this Office will forward notice of this application's filing to the non-signing inventor at the address given in the petition. Notice of the filing of this application will also be published in the Official Gazette.

After the mailing of this decision, the application will be forwarded to Technology Center Art Unit 2912 for examination in due course.

Telephone inquiries regarding this decision should be directed to the undersigned at (571) 272-3230.

Shirene Willis Brantley

Shirene Willis Brantley
Senior Petitions Attorney
Office of Petitions

UNITED STATES PATENT AND TRADEMARK OFFICE

COMMISSIONER FOR PATENTS
UNITED STATES PATENT AND TRADEMARK OFFICE
P.O. BOX 1450
ALEXANDRIA, VA 22313-1450
www.uspto.gov

COPY MAILED
JUL 28 2006
OFFICE OF PETITIONS

PAUL J. SUTTON, ESQ., BARRY G. MAGIDOFF, ESQ.
GREENBERG TRAURIG, LLP
200 PARK AVENUE
NEW YORK, NY 10166

In re Application of	:
Merritt, et al.	: DECISION GRANTING STATUS
Application No. 29/240,418	: UNDER 37 CFR 1.47(a)
Filed: October 11, 2005	:
Atty. Dkt. No.: 0267-001-2117DES-D	:
For: DIMMER PADDLE SWITCH	:

This decision is in response to the petition under 37 CFR 1.47(a), filed June 8, 2006.

The petition is **GRANTED**.

Petitioner has shown that inventor Damon Bruccoleri has refused to execute the declaration for the above-identified application after having been presented with the application papers.

The above-identified application and papers have been reviewed and found in compliance with 37 CFR 1.47(a). This application is hereby accorded Rule 1.47(a) status.

As provided in Rule 1.47(c), this Office will forward notice of this application's filing to the non-signing inventors at the addresses given in the petition. Notice of the filing of this application will also be published in the Official Gazette.

The required petition fee of $200.00 has been charged to petitioner's deposition account.

After this decision is mailed, the above-identified application will be returned to the Office of Initial Patent Examination for further processing.

Telephone inquiries regarding this decision should be directed to the undersigned at (571) 272-3205.

Alesia M. Brown
Petitions Attorney
Office of Petitions

UNITED STATES PATENT AND TRADEMARK OFFICE

COMMISSIONER FOR PATENTS
UNITED STATES PATENT AND TRADEMARK OFFICE
P.O. BOX 1450
ALEXANDRIA, VA 22313-1450
www.uspto.gov

DAMON BRUCCOLERI
80 Briarcliff Road
Westbury, NY 11590

COPY MAILED
JUL 28 2006
OFFICE OF PETITIONS

In re Application of :
Merritt, et al. : LETTER
Application No. 29/240,418 :
Filed: October 11, 2005 :
Atty. Dkt. No.: 0267-001-2117DES-D :
For: DIMMER PADDLE SWITCH :

Dear Sir:

You are named as an inventor in the above-identified United States patent application filed under the provisions of 35 U.S.C. 116 (United States Code) and 37 C.F.R. § 1.47(a), Rules of Practice in Patent Cases. Should a patent be granted on the application you will be designated therein as a joint inventor.

As a named inventor you are entitled to inspect any paper in the file wrapper of the application, order copies of all or any part thereof (at a prepaid cost as per 37 C.F.R. § 1.19) or make your position of record in the application. Alternatively, you may arrange to do any of the preceding through a registered patent attorney or agent presenting written authorization from you. If you care to join the application, counsel of record (see below) would presumably assist you. Joining in the application would entail the filing of an appropriate oath or declaration by you pursuant to 37 C.F.R. § 1.63.

Requests for information regarding your application should be directed to the File Information Unit at (703) 308-2733. Information regarding how to pay for and order a copy of the application, or a specific paper in the application, should be directed to Certification Division at (703) 308-9726 or 1-800-972-6382 (outside the Washington D.C. area).

Alesia M. Brown
Petitions Attorney
Office of Petitions

UNITED STATES PATENT AND TRADEMARK OFFICE

Commissioner for Patents
United States Patent and Trademark Office
P.O. Box 1450
Alexandria, VA 22313-1450
www.uspto.gov

GREENBERG TRAURIG LLP
METLIFE BUILDING
200 PARK AVE
NEW YORK NY 10166

COPY MAILED
JUL 19 2006
OFFICE OF PETITIONS

In re Application of :
Merritt, et al. :
Application No. 29/240,426 :
Filed: October 11, 2005 :
Attorney Docket No. 0267-001-2117DES-B :

DECISION ACCORDING STATUS UNDER 37 CFR 1.47(a)

This is in response to the petition under 37 CFR 1.47(a), filed June 9, 2006.

The petition under 37 CFR 1.47(a) is **GRANTED**.

Petitioner has shown that non-signing inventor Bruccoleri has refused to sign the declaration after having been presented with the application papers.

The above-identified application and papers have been reviewed and found to be in compliance with 37 CFR 1.47(a). Accordingly, the above-identified application is hereby accorded Rule 1.47(a) status. As provided in 37 CFR 1.47(c), this Office will forward notice of this application's filing to the non-signing inventor at the last known address provided in the petition. Notice of the filing of this application will also be published in the Official Gazette.

The matter is being forwarded to Group Art Unit 2912 for examination in due course.

Telephone inquiries related to this decision may be directed to the undersigned at (571)272-3207.

Cliff Congo
Petitions Attorney
Office of Petitions

UNITED STATES PATENT AND TRADEMARK OFFICE

Commissioner for Patents
United States Patent and Trademark Office
P.O. Box 1450
Alexandria, VA 22313-1450
www.uspto.gov

DAMON BRUCCOLERI
80 BRIARCLIFF RD
WESTBURY NY 11590

COPY MAILED

JUL 19 2006

OFFICE OF PETITIONS

In re Application of :
John Merritt, David Ong, Selin :
Glickman, Azer Ilkhanov, Damon :
Bruccoleri :
Application No. 29/240,426 : LETTER
Filed: October 11, 2005 :
Title: Dimmer Switch :

Dear Mr. Bruccoleri:

You are named as a joint inventor in the above-identified United States patent reissue application filed under the provisions of 35 USC 116 (United States Code) and 37 CFR 1.47(a), Rules of Practice in Patent Cases. Should a patent be granted on the application you will be designated therein as a joint inventor.

As a named inventor you are entitled to inspect any paper in the file wrapper of the application, order copies of all or any part thereof (at a prepaid cost per 37 CFR 1.19) or make your position of record in the application. Alternatively, you may arrange to do any of the preceding through a registered patent attorney or agent presenting written authorization from you. If you care to join the application, agent of record (see below) would presumably assist you. Joining in the application would entail the filing of an appropriate oath or declaration by you pursuant to 37 CFR 1.63.

Telephone inquiries regarding this communication should be directed to Petitions Attorney Cliff Congo at (571)272-3207. Requests for information regarding your application should be directed to the File Information Unit at (703) 308-2733. Information regarding how to pay for and order a copy of the application, or a specific paper in the application, should be directed to the Certification Division at (703) 308-9726 or 1-800-972-6382 (outside the Washington D.C. area).

Cliff Congo
Petitions Attorney
Office of Petitions

Paul Sutton
Greenberg Traurig LLP
MetLife Building
200 Park Ave
New York, NY 10166

UNITED STATES PATENT AND TRADEMARK OFFICE

Commissioner for Patents
United States Patent and Trademark Office
P.O. Box 1450
Alexandria, VA 22313-1450
www.uspto.gov

GREENBERG TRAURIG LLP
METLIFE BUILDING
200 PARK AVE
NEW YORK NY 10166

COPY MAILED

JUL 19 2006

OFFICE OF PETITIONS

In re Application of	:	
Merritt, et al.	:	DECISION ACCORDING STATUS
Application No. 29/240,427	:	UNDER 37 CFR 1.47(a)
Filed: October 11, 2005	:	
Attorney Docket No. 0267-001-2117DES-A	:	

This is in response to the petition under 37 CFR 1.47(a), filed June 9, 2006.

The petition under 37 CFR 1.47(a) is **GRANTED**.

Petitioner has shown that non-signing inventor Bruccoleri has refused to sign the declaration after having been presented with the application papers.

The above-identified application and papers have been reviewed and found to be in compliance with 37 CFR 1.47(a). Accordingly, the above-identified application is hereby accorded Rule 1.47(a) status. As provided in 37 CFR 1.47(c), this Office will forward notice of this application's filing to the non-signing inventor at the last known address provided in the petition. Notice of the filing of this application will also be published in the Official Gazette.

The matter is being forwarded to Group Art Unit 2912 for examination in due course.

Telephone inquiries related to this decision may be directed to the undersigned at (571)272-3207.

Cliff Congo
Petitions Attorney
Office of Petitions

PTO/SB/27 (05-03)
Approved for use through 04/30/2003. OMB 0651-0031
U.S. Patent and Trademark Office; U.S. DEPARTMENT OF COMMERCE
Under the Paperwork Reduction Act of 1995, no persons are required to respond to a collection of information unless it displays a valid OMB control number.

REQUEST FOR EXPEDITED EXAMINATION OF A DESIGN APPLICATION (37 CFR 1.155)

Application Number	TO BE ASSIGNED
Filing Date	October 3, 2005
First Named Inventor	William Young
Title	Portion Of A Shoe Midsole
Atty Docket Number	015127.00547

113006 U.S.PTO 29/240435 101405

HAND DELIVER TO THE DESIGN GROUP DIRECTOR'S OFFICE
-or- ADDRESS TO:
MAIL STOP EXPEDITED DESIGN
COMMISSIONER FOR PATENTS
P.O. Box 1450
Alexandria, VA 22313-1450

Approved 11-9-05
Jacqueline M. Stone
Jacqueline M. Stone, Director
Technology Center 1700

This is a request for expedited examination of a design application under 37 CFR 1.155.

NOTE: If the Request made by this form accompanies original application papers, include form PTO/SB/18 "Design Patent Application Transmittal" or its equivalent.

A preexamination search was conducted. The field of search was:

D2/902, 907, 908, 943, 944, 946, 964, 969, 972, 977

Related applications: This application is related to Attorney Docket No. 015127.00548 being filed on even date herewith.

If not previously filed for the above-identified application, the following items required by 37 CFR 1.155 are enclosed:

Formal drawings (see 37 CFR 1.84).

The fee set forth in 37 CFR 1.17(k).

An information disclosure statement in compliance with 37 CFR 1.98.

October 14, 2005
Date

Signature

202-824-3000
Telephone Number

Robert S. Katz, Reg. No. 36,402
Typed or printed name

WARNING: Information on this form may become public. Credit card information should not be included on this form. Provide credit card information and authorization on PTO-2038.

This collection of information is required by 37 CFR 1.155. The information is required to obtain or retain a benefit by the public which is to file (and by the USPTO to process) an application. Confidentiality is governed by 35 U.S.C. 122 and 37 CFR 1.14. This collection is estimated to take 6 minutes to complete, including gathering, preparing, and submitting the completed application form to the USPTO. Time will vary depending upon the individual case. Any comments on the amount of time you require to complete this form and/or suggestions for reducing this burden, should be sent to the Chief Information Officer, U.S. Patent and Trademark Office, U.S. Department of Commerce, P.O. Box 1450, Alexandria, VA 22313-1450. DO NOT SEND FEES OR COMPLETED FORMS TO THIS ADDRESS. SEND TO: Mail Stop Expedited Design, Commissioner for Patents, P.O. Box 1450, Alexandria, VA 22313-1450.

10/17/2005 SSITHIB1 00000101 190733 29240435
01 FC:1802 900.00 DA

PTO/SB/27 (05-03)
Approved for use through 04/30/2003. OMB 0651-0031
U.S. Patent and Trademark Office; U.S. DEPARTMENT OF COMMERCE
Under the Paperwork Reduction Act of 1995, no persons are required to respond to a collection of information unless it displays a valid OMB control number.

REQUEST FOR EXPEDITED EXAMINATION OF A DESIGN APPLICATION (37 CFR 1.155)

Application Number	TBD
Filing Date	October 14, 2005
First Named Inventor	Leonard Wozniak
Title	Portion Of A Shoe Upper
Atty Docket Number	015127.00574

13006 U.S. PTO
10/24/05
101405

HAND DELIVER TO THE DESIGN GROUP DIRECTOR'S OFFICE
-or- ADDRESS TO:
MAIL STOP EXPEDITED DESIGN
COMMISSIONER FOR PATENTS
P.O. Box 1450
Alexandria, VA 22313-1450

This is a request for expedited examination of a design application under 37 CFR 1.155.

NOTE: If the Request made by this form accompanies original application papers, include form PTO/SB/18 "Design Patent Application Transmittal" or its equivalent.

Approved 11-9-05
Jacqueline M. Stone
Jacqueline M. Stone, Director
Technology Center 1700

A preexamination search was conducted. The field of search was:

D2/896, 902, 907, 908, 943, 944, 945, 946, 969, 972 973, and 974

Related applications: _____

If not previously filed for the above-identified application, the following items required by 37 CFR 1.155 are enclosed:

Formal drawings (see 37 CFR 1.84).

The fee set forth in 37 CFR 1.17(k).

An information disclosure statement in compliance with 37 CFR 1.98.

October 14, 2005
Date

Darrell G Mottley
Signature

202-824-3000
Telephone Number

Darrell G. Mottley, Reg. No. 42,912
Typed or printed name

WARNING: Information on this form may become public. Credit card information should not be included on this form. Provide credit card information and authorization on PTO-2038.

This collection of information is required by 37 CFR 1.155. The information is required to obtain or retain a benefit by the public which is to file (and by the USPTO to process) an application. Confidentiality is governed by 35 U.S.C. 122 and 37 CFR 1.14. This collection is estimated to take 6 minutes to complete, including gathering, preparing, and submitting the completed application form to the USPTO. Time will vary depending upon the individual case. Any comments on the amount of time you require to complete this form and/or suggestions for reducing this burden, should be sent to the Chief Information Officer, U.S. Patent and Trademark Office, U.S. Department of Commerce, P.O. Box 1450, Alexandria, VA 22313-1450. DO NOT SEND FEES OR COMPLETED FORMS TO THIS ADDRESS. SEND TO: Mail Stop Expedited Design, Commissioner for Patents, P.O. Box 1450, Alexandria, VA 22313-1450.

If you need assistance in completing the form, call 1-800-PTO-9199 and select option 2.

10/17/2005 SSITHIB1 00000102 190733 29240436
01 FC:1802 900.00 DA

PTO/SB/27 (05-03)
Approved for use through 04/30/2003. OMB 0651-0031
U.S. Patent and Trademark Office; U.S. DEPARTMENT OF COMMERCE
Under the Paperwork Reduction Act of 1995, no persons are required to respond to a collection of information unless it displays a valid OMB control number.

REQUEST FOR EXPEDITED EXAMINATION OF A DESIGN APPLICATION (37 CFR 1.155)

Application Number	TO BE ASSIGNED
Filing Date	October 14, 2005
First Named Inventor	William Young
Title	Portion Of A Shoe Midsole
Atty Docket Number	015127.00548

13006 U.S.PTO
29240437
101405

HAND DELIVER TO THE DESIGN GROUP DIRECTOR'S OFFICE
-or- ADDRESS TO:
MAIL STOP EXPEDITED DESIGN
COMMISSIONER FOR PATENTS
P.O. Box 1450
Alexandria, VA 22313-1450

This is a request for expedited examination of a design application under 37 CFR 1.155.

NOTE: If the Request made by this form accompanies original application papers, include form PTO/SB/18 "Design Patent Application Transmittal" or its equivalent.

A preexamination search was conducted. The field of search was:

D2/902, 907, 908, 943, 944, 946, 964, 969, 972 and 977

Related applications: _____

If not previously filed for the above-identified application, the following items required by 37 CFR 1.155 are enclosed:

Formal drawings (see 37 CFR 1.84).

The fee set forth in 37 CFR 1.17(k).

An information disclosure statement in compliance with 37 CFR 1.98.

Approved 11-9-05
Jacqueline M. Stone
Jacqueline M. Stone, Director
Technology Center 1700

October 14, 2005
Date

Signature

202-824-3000
Telephone Number

Robert S. Katz, Reg. No. 36,402
Typed or printed name

WARNING: Information on this form may become public. Credit card information should not be included on this form. Provide credit card information and authorization on PTO-2038.

This collection of information is required by 37 CFR 1.155. The information is required to obtain or retain a benefit by the public which is to file (and by the USPTO to process) an application. Confidentiality is governed by 35 U.S.C. 122 and 37 CFR 1.14. This collection is estimated to take 6 minutes to complete, including gathering, preparing, and submitting the completed application form to the USPTO. Time will vary depending upon the individual case. Any comments on the amount of time you require to complete this form and/or suggestions for reducing this burden, should be sent to the Chief Information Officer, U.S. Patent and Trademark Office, U.S. Department of Commerce, P.O. Box 1450, Alexandria, VA 22313-1450. DO NOT SEND FEES OR COMPLETED FORMS TO THIS ADDRESS. **SEND TO: Mail Stop Expedited Design, Commissioner for Patents, P.O. Box 1450, Alexandria, VA 22313-1450.**

If you need assistance in completing the form, call 1-800-PTO-9199 and select option 2.

10/17/2005 SSITHIB1 00000103 190733 29240437
01 FC:1802 900.00 DA

PTO/SB/27 (05-03)
Approved for use through 04/30/2003. OMB 0651-0031
U.S. Patent and Trademark Office; U.S. DEPARTMENT OF COMMERCE
Under the Paperwork Reduction Act of 1995, no persons are required to respond to a collection of information unless it displays a valid OMB control number.

REQUEST FOR EXPEDITED EXAMINATION OF A DESIGN APPLICATION (37 CFR 1.155)

Application Number	TO BE ASSIGNED
Filing Date	October 14, 2005
First Named Inventor	William Young
Title	Portion Of A Shoe Upper
Atty Docket Number	015127.00539

113006 U.S.PTO
29/240438
101405

HAND DELIVER TO THE DESIGN GROUP DIRECTOR'S OFFICE
-or- ADDRESS TO:
MAIL STOP EXPEDITED DESIGN
COMMISSIONER FOR PATENTS
P.O. Box 1450
Alexandria, VA 22313-1450

This is a request for expedited examination of a design application under 37 CFR 1.155.

NOTE: If the Request made by this form accompanies original application papers, include form PTO/SB/18 "Design Patent Application Transmittal" or its equivalent.

A preexamination search was conducted. The field of search was:

D2/896, 902, 907, 908, 943, 944, 945, 946, 969, 972, 973 and 974

Related applications: ____

If not previously filed for the above-identified application, the following items required by 37 CFR 1.155 are enclosed:

Formal drawings (see 37 CFR 1.84).

The fee set forth in 37 CFR 1.17(k).

An information disclosure statement in compliance with 37 CFR 1.98.

11-9-05
Approved
Jacqueline M. Stone
Jacqueline M. Stone, Director
Technology Center 1700

October 14, 2005
Date

Signature

202-824-3000
Telephone Number

Robert S. Katz, Reg. No. 36,402
Typed or printed name

WARNING: Information on this form may become public. Credit card information should not be included on this form. Provide credit card information and authorization on PTO-2038.

This collection of information is required by 37 CFR 1.155. The information is required to obtain or retain a benefit by the public which is to file (and by the USPTO to process) an application. Confidentiality is governed by 35 U.S.C. 122 and 37 CFR 1.14. This collection is estimated to take 6 minutes to complete, including gathering, preparing, and submitting the completed application form to the USPTO. Time will vary depending upon the individual case. Any comments on the amount of time you require to complete this form and/or suggestions for reducing this burden, should be sent to the Chief Information Officer, U.S. Patent and Trademark Office, U.S. Department of Commerce, P.O. Box 1450, Alexandria, VA 22313-1450. DO NOT SEND FEES OR COMPLETED FORMS TO THIS ADDRESS. **SEND TO: Mail Stop Expedited Design, Commissioner for Patents, P.O. Box 1450, Alexandria, VA 22313-1450.**

If you need assistance in completing the form, call 1-800-PTO-9199 and select option 2.

10/17/2005 SSITHIB1 00000104 190733 29240438

01 FC:1802 900.00 DA

PTO/SB/27 (05-03)
Approved for use through 04/30/2003. OMB 0651-0031
U.S. Patent and Trademark Office; U.S. DEPARTMENT OF COMMERCE
Under the Paperwork Reduction Act of 1995, no persons are required to respond to a collection of information unless it displays a valid OMB control number.

REQUEST FOR EXPEDITED EXAMINATION OF A DESIGN APPLICATION (37 CFR 1.155)

Application Number	TBD
Filing Date	October 14, 2005
First Named Inventor	Leonard Wozniak
Title	Portion Of A Shoe Upper
Atty Docket Number	015127.00589

113006 U.S.PTO
29/240439
101405

HAND DELIVER TO THE DESIGN GROUP DIRECTOR'S OFFICE
-or- ADDRESS TO:
MAIL STOP EXPEDITED DESIGN
COMMISSIONER FOR PATENTS
P.O. Box 1450
Alexandria, VA 22313-1450

This is a request for expedited examination of a design application under 37 CFR 1.155.

NOTE: If the Request made by this form accompanies original application papers, include form PTO/SB/18 "Design Patent Application Transmittal" or its equivalent.

A preexamination search was conducted. The field of search was:

D2/896, 902, 907, 908, 943, 944, 945, 946, 969, 972 973, and 974

Related applications: _____

If not previously filed for the above-identified application, the following items required by 37 CFR 1.155 are enclosed:

Formal drawings (see 37 CFR 1.84).

The fee set forth in 37 CFR 1.17(k).

An information disclosure statement in compliance with 37 CFR 1.98.

11-9-05
Approved
Jacqueline M. Stone
Jacqueline M. Stone, Director
Technology Center 1700

October 14, 2005
Date

Darrell G. Mottley
Signature

202-824-3000
Telephone Number

Darrell G. Mottley, Reg. No. 42,912
Typed or printed name

WARNING: Information on this form may become public. Credit card information should not be included on this form. Provide credit card information and authorization on PTO-2038.

This collection of information is required by 37 CFR 1.155. The information is required to obtain or retain a benefit by the public which is to file (and by the USPTO to process) an application. Confidentiality is governed by 35 U.S.C. 122 and 37 CFR 1.14. This collection is estimated to take 6 minutes to complete, including gathering, preparing, and submitting the completed application form to the USPTO. Time will vary depending upon the individual case. Any comments on the amount of time you require to complete this form and/or suggestions for reducing this burden, should be sent to the Chief Information Officer, U.S. Patent and Trademark Office, U.S. Department of Commerce, P.O. Box 1450, Alexandria, VA 22313-1450. DO NOT SEND FEES OR COMPLETED FORMS TO THIS ADDRESS. SEND TO: Mail Stop Expedited Design, Commissioner for Patents, P.O. Box 1450, Alexandria, VA 22313-1450.

If you need assistance in completing the form, call 1-800-PTO-9199 and select option 2.

10/17/2005 SSITHIB1 00000105 190733 29240439
01 FC:1802 900.00 DA

PTO/SB/27 (05-03)
Approved for use through 04/30/2003. OMB 0651-0031
U.S. Patent and Trademark Office; U.S. DEPARTMENT OF COMMERCE
Under the Paperwork Reduction Act of 1995, no persons are required to respond to a collection of information unless it displays a valid OMB control number.

REQUEST FOR EXPEDITED EXAMINATION OF A DESIGN APPLICATION (37 CFR 1.155)

Application Number	TBD
Filing Date	October 14, 2004
First Named Inventor	Frederick J. Dojan et al.
Title	Portion Of A Shoe Midsole
Atty Docket Number	015127.00600

113006 U.S.PTO
29/240440
101405

HAND DELIVER TO THE DESIGN GROUP DIRECTOR'S OFFICE
-or- ADDRESS TO:
MAIL STOP EXPEDITED DESIGN
COMMISSIONER FOR PATENTS
P.O. Box 1450
Alexandria, VA 22313-1450

This is a request for expedited examination of a design application under 37 CFR 1.155.

NOTE: If the Request made by this form accompanies original application papers, include form PTO/SB/18 "Design Patent Application Transmittal" or its equivalent.

A preexamination search was conducted. The field of search was:

D2/896, 902, 907, 908, 943, 944, 964, 969, 972, and 977

Related applications: ____

If not previously filed for the above-identified application, the following items required by 37 CFR 1.155 are enclosed:

Formal drawings (see 37 CFR 1.84).

The fee set forth in 37 CFR 1.17(k).

An information disclosure statement in compliance with 37 CFR 1.98.

11-9-05
Approved
Jacqueline M. Stone
Jacqueline M. Stone, Director
Technology Center 1700

October 14, 2005
Date

Anthony W. Kandare
Signature

202-824-3000
Telephone Number

Anthony W. Kandare, Reg. No. 48,830
Typed or printed name

WARNING: Information on this form may become public. Credit card information should not be included on this form. Provide credit card information and authorization on PTO-2038.

This collection of information is required by 37 CFR 1.155. The information is required to obtain or retain a benefit by the public which is to file (and by the USPTO to process) an application. Confidentiality is governed by 35 U.S.C. 122 and 37 CFR 1.14. This collection is estimated to take 6 minutes to complete, including gathering, preparing, and submitting the completed application form to the USPTO. Time will vary depending upon the individual case. Any comments on the amount of time you require to complete this form and/or suggestions for reducing this burden, should be sent to the Chief Information Officer, U.S. Patent and Trademark Office, U.S. Department of Commerce, P.O. Box 1450, Alexandria, VA 22313-1450. DO NOT SEND FEES OR COMPLETED FORMS TO THIS ADDRESS. SEND TO: Mail Stop Expedited Design, Commissioner for Patents, P.O. Box 1450, Alexandria, VA 22313-1450.

If you need assistance in completing the form, call 1-800-PTO-9199 and select option 2.

10/17/2005 SSITHIB1 00000106 190733 29240440
01 FC:1802 900.00 DA

UNITED STATES PATENT AND TRADEMARK OFFICE

Commissioner for Patents
United States Patent and Trademark Office
P.O. Box 1450
Alexandria, VA 22313-1450
www.uspto.gov

Date :03/08/07

Patent No. : D535170 S
Ser. No. : 29/240,451
Inventor(s) : CAPLAN, CRAIG
Issued : 01/16/07
Title : **SCREWDRIVER**
Docket No. : PS600914

Re: Request for Certificate of Correction

Consideration has been given your request for the issuance of a certificate of correction for the above-identified patent under the provisions of Rule(s) 1.322 and/or 1.323.

Assignees' names and addresses (assignment data) printed in a patent, are based *solely* on information supplied in the appropriate space for identifying the assignment data, i.e., item 3 of the Issue Fee Transmittal Form PTOL-85B. Granting of a request under 37 CFR 3.81(b) is required to correct applicant's error providing ***incorrect or erroneous*** assignment data, *before* issuance of a Certificate of Correction, under 37 CFR 1.323 *(see Manual of Patent Examining Procedures (M.P.E.P) Chp.1400, sect. 1481).* This procedure is required *at any time after the issue fee is paid*, including after issuance of the patent.

In view of the foregoing, your request, in this mater, is hereby denied.

A request to correct the Assignee under 37 CFR 3.81(b) should include:

A. **the processing fee set forth in 37 CFR 1.117(h) (currently $130);**
B. a statement that the failure to include the correct assignee name on the PTOL-85B was inadvertent; and
C. a copy of the Notice of Recordation of Assignment Document, reflecting the reel and frame number where the assignment(s) is recorded and/or reflecting proof of *the date* the assignment was submitted for recordation.

In the Request, Applicant(s) may request that the file be forwarded to Certificates of Correction Branch, for issuance of a Certificate of Correction, if the Request is granted.

Any request under 37 CFR 3.81(b) should be directed to the following address or facsimile number:

By mail: Mail Stop PETITIONS
Commissioner for Patents
Post Office Box 1450
Alexandria, VA 22313-1450

By hand: Customer Service Window
Mail Stop Petitions
Randolph Building
401 Dulany Street
Alexandria, VA 22314

By fax: (703) 872-9306
ATTN: Office of Petitions

If a fee (currently $100) was previously submitted for consideration of a Request for Certificate of Correction, under CFR 1.323, to correct assignment data, , no additional fee is required.

Lamonte M. Newsome
For Cecelia Newman
Decisions & Certificates
of Correction Branch
(703) 308-9390 #112 or (703) 308-8309

GLENN PATENT GROUP
3475 EDISON WAY, SUITE L
MENLO PARK CA 94025

LMN

UNITED STATES PATENT AND TRADEMARK OFFICE

Commissioner for Patents
United States Patent and Trademark Office
P.O. Box 1450
Alexandria, VA 22313-1450
www.uspto.gov

GLEEN PATENT GROUP
3475 EDISON WAY, SUITE L
MENLO PARK, CA 94025

COPY MAILED

SEP 10 2008

OFFICE OF PETITIONS

In re Patent No. D535170 :
Issue Date: January 16, 2007 :
Application No. 29/240,451 : ON PETITION
Filed: October 12, 2005 :
Attorney Docket No. PS600914 :

This is a decision on the petition filed April 4, 2007, which is being treated as a petition under 37 CFR 3.81(b) to correct the assignee's name on the front page of the above-identified patent by way of a certificate of correction.

The petition is **DISMISSED**.

Petitioner requests issuance of a certificate of correction in the name of "Caplan Industries Inc."

The $100 certificate of correction fee has been received. However, the petition received on April 4, 2007 authorized the Office to charge any additional fees that may be due and signed by Julia A. Thomas. The $130 petition fee is due. The authorized user (Julia A. Thomas) is not listed on the account. This petition can not be granted until the $130 petition fee is received.

Telephone inquiries concerning this decision on petition should be directed to Irvin Dingle at (571) 272-3210.

Irvin Dingle
Petitions Examiner
Office of Petitions

UNITED STATES PATENT AND TRADEMARK OFFICE

Commissioner for Patents
United States Patent and Trademark Office
P.O. Box 1450
Alexandria, VA 22313-1450
www.uspto.gov

GOLD & RIZVI, P.A.
600 N. PINE ISLAND ROAD, SUITE 450
PLANTATION, FL 33324-1311

COPY MAILED

DEC 2 0 2007

OFFICE OF PETITIONS

In re Application of :
Garry L. Gassew :
Application No. 29/240,452 : ON PETITION
Filed: October 13, 2005 :
Attorney Docket No. 1178.0200 :

This is a decision on the petition, filed September 4, 2007 under 37 CFR 1.137(b) to revive the above-identified application.

The petition is **DISMISSED.**

Any request for reconsideration of this decision must be submitted within TWO (2) MONTHS from the mail date of this decision. Extensions of time under 37 CFR 1.136(a) are permitted. The reconsideration request should include a cover letter entitled "**Renewed Petition under 37 CFR 1.137(b)**." This is **not** final agency action within the meaning of 5 U.S.C. § 704.

The above-identified application became abandoned for failure to submit the formal drawings in a timely manner in reply to the Notice of Allowance mailed August 24, 2006, which set a statutory period for reply of three (3) months. Accordingly, the above-identified application became abandoned on November 25, 2006.

A grantable petition under 37 CFR 1.137(b) must be accompanied by: (1) the required reply, unless previously filed; (2) the petition fee as set forth in 37 CFR 1.17(m); (3) a statement that the entire delay in filing the required reply from the due date for the reply until the filing of a grantable petition pursuant to 37 CFR 1.137(b) was unintentional; and (4) any terminal disclaimer (and fee as set forth in 37 CFR 1.20(d)) required by 37 CFR 1.137(c). Where there is a question as to whether either the abandonment or the delay in filing a petition under 37 CFR 1.137 was unintentional, the Commissioner may require additional information. See MPEP 711.03(c)(III)(C) and (D). The instant petition lack(s) item(s) (4).

The petition does not satisfies the conditions for revival pursuant to the provisions of 37 CFR 1.137(b) in that (4) the terminal disclaimer was not received. Accordingly, this petition can not be revive until the terminal disclaimer is received.

Further correspondence with respect to this matter should be addressed as follows:

By mail: Mail Stop PETITION
Commissioner for Patents
Post Office Box 1450
Alexandria, VA 22313-1450

By hand: Customer Service Window
Randolph Building
401 Dulany Street
Alexandria, VA 22314

By facsimile: (571) 273-8300
ATTN: Office of Petitions

Telephone inquiries concerning this decision should be directed to the undersigned at (571) 272-3210.

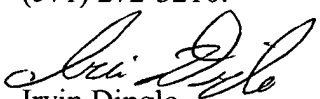

Irvin Dingle
Petitions Examiner
Office of Petitions

UNITED STATES PATENT AND TRADEMARK OFFICE

Commissioner for Patents
United States Patent and Trademark Office
P.O. Box 1450
Alexandria, VA 22313-1450
www.uspto.gov

GOLD & RIZVI, P.A.
600 N. PINE ISLAND ROAD
SUITE 450
PLANTATION, FL 33324-1311

COPY MAILED

JUL 11 2008

OFFICE OF PETITIONS

In re Application of :
Garry L. Gassew :
Application No. 29/240,452 : ON PETITION
Filed: October 13, 2005 :
Attorney Docket No. 1178.0200 :

This is a decision on the renewed petition under 37 CFR 1.137(b), filed April 2, 2008, to revive the above-identified application.

The petition is **GRANTED**.

Telephone inquiries concerning this decision should be directed to Irvin Dingle at (571) 272-3210.

This matter is being referred to Technology Center AU 2915 for further processing.

Irvin Dingle
Petitions Examiner
Office of Petitions

UNITED STATES PATENT AND TRADEMARK OFFICE

Commissioner for Patents
United States Patent and Trademark Office
P.O. Box 1450
Alexandria, VA 22313-1450
www.uspto.gov

Date :03/09/07

Patent No. : D535540 S
Ser. No. : 29/240,470
Inventor(s) : CAPLAN, CRAIG
Issued : 01/23/07
Title : **SCREWDRIVER**
Docket No. : PS600916

Re: Request for Certificate of Correction

Consideration has been given your request for the issuance of a certificate of correction for the above-identified patent under the provisions of Rule(s) 1.322 and/or 1.323.

Assignees' names and addresses (assignment data) printed in a patent, are based *solely* on information supplied in the appropriate space for identifying the assignment data, i.e., item 3 of the Issue Fee Transmittal Form PTOL-85B. Granting of a request under 37 CFR 3.81(b) is required to correct applicant's error providing ***incorrect or erroneous*** assignment data, *before* issuance of a Certificate of Correction, under 37 CFR 1.323 *(see Manual of Patent Examining Procedures (M.P.E.P) Chp.1400, sect. 1481).* This procedure is required *at any time after the issue fee is paid*, including after issuance of the patent.

In view of the foregoing, your request, in this mater, is hereby denied.

A request to correct the Assignee under 37 CFR 3.81(b) should include:

A. **the processing fee set forth in 37 CFR 1.117(h) (currently $130);**
B. a statement that the failure to include the correct assignee name on the PTOL-85B was inadvertent; and
C. a copy of the Notice of Recordation of Assignment Document, reflecting the reel and frame number where the assignment(s) is recorded and/or reflecting proof of *the date* the assignment was submitted for recordation.

In the Request, Applicant(s) may request that the file be forwarded to Certificates of Correction Branch, for issuance of a Certificate of Correction, if the Request is granted.

Any request under 37 CFR 3.81(b) should be directed to the following address or facsimile number:

By mail: Mail Stop PETITIONS
Commissioner for Patents
Post Office Box 1450
Alexandria, VA 22313-1450

By hand: Customer Service Window
Mail Stop Petitions
Randolph Building
401 Dulany Street
Alexandria, VA 22314

By fax: (703) 872-9306
ATTN: Office of Petitions

If a fee (currently $100) was previously submitted for consideration of a Request for Certificate of Correction, under CFR 1.323, to correct assignment data, , no additional fee is required.

Lamonte M. Newsome
For Cecelia Newman
Decisions & Certificates
of Correction Branch
(703) 308-9390 #112 or (703) 308-8309

GLENN PATENT GROUP
3475 EDISON WAY, SUITE L
MENLO PARK CA 94025

LMN

UNITED STATES PATENT AND TRADEMARK OFFICE

Commissioner for Patents
United States Patent and Trademark Office
P.O. Box 1450
Alexandria, VA 22313-1450
www.uspto.gov

VIDAS, ARRETT & STEINKRAUS
6109 BLUE CIRCLE DRIVE, SUITE 2000
MINNETONKA, MNN 55343-9185

COPY MAILED

MAR 19 2007

OFFICE OF PETITIONS

In re Application of
Reiner Pils et al
Application No. 29/240,475
Filed: October 13, 2005
Attorney Docket No. H01.2-11421-US02

DECISION ON PETITION

This is in response to the communication received on July 7, 2006, which is being treated as a petition under 37 CFR 1.181 requesting an amendment to the second inventor's citizenship prior to issuance of this application into a patent.

The petition is **DISMISSED**.

The request to amend the second inventor's citizenship was received after payment of the issue fee. As such, the amendment falls under the provisions of 37 CFR 1.312. As no amendment to the application may be made after payment of the issue fee, the petition cannot be granted at this time without withdrawing the application from issue pursuant to the provisions of 37 CFR 1.313(c).

The executed Declaration and Application Data Sheet have been placed of record in the file.

Any questions concerning this matter may be directed to the undersigned at (571) 272-3218.

The matter is being referred to Publishing Division.

Frances Hicks
Petitions Examiner
Office of Petitions

UNITED STATES PATENT AND TRADEMARK OFFICE

Commissioner for Patents
United States Patent and Trademark Office
P.O. Box 1450
Alexandria, VA 22313-1450
www.uspto.gov

VIDAS, ARRETT & STEINKRAUS
6109 BLUE CIRCLE DRIVE, SUITE 2000
MINNETONKA, MN 55343-9185

COPY MAILED

APR 0 5 2007

OFFICE OF PETITIONS

In re Application of :
Reiner Pils et al :
Application No. 29/240,475 : DECISION ON PETITION
Filed: October 13, 2005 :
Attorney Docket No. H01.2-11421-US02 :

This is in response to the communication received July 7, 2006, which is being treated as a petition under 37 CFR 1.182 requesting an amendment to the second inventor's country of residence prior to issuance of this application into a patent. This communication was originally treated as a petition under 37 CFR 1.181 and dismissed in a decision mailed March 19, 2006. However, it would have been more appropriate to have treated the petition as one under 37 CFR 1.182, which this decision will now address.

The petition is **DISMISSED**.

The issue fee in this application was paid on May 26, 2006. Effective May 29, 2000, the Office changed the practice by clarifying that an amendment under 37 CFR 1.312 (after allowance) must be filed prior to or with payment of the issue fee, and eliminated 37 CFR 1.312(b). Therefore, no amendment to the application can be made at this time.

However, upon submission of a certificate of correction and fee, it would be appropriate for the Office to issue a certificate of correction to correct the front page of the Letters Patent to reflect the correction to the country of residence of the second named inventor.

In view of the above and **after issuance of this application into a patent, the Certificates of Correction Branch is instructed to issue a certificate of correction upon submission by petitioner of a request for a certificate of correction (and fee) which sets forth France as the country of residence for the second named inventor**. *No certificate of correction will be issued which sets forth a country of residence other than the country noted in the petition. A copy of this decision **must** accompany the request for a Certificate of Correction.*

No further renewed petition under 37 CFR 1.182 is necessary for consideration by the Office of Petitions for issuance of a certificate of correction to correct the country of residence of the

second named inventor, since this decision operates as an instruction to the Certificates of Correction Branch to issue the requested certificate of correction.

As authorized, the $400 fee required for the petition under 37 CFR 1.182 will be charged to petitioner's deposit account.

As requested by the communication received on March 30, 2007, a Corrected Filing Receipt, which sets forth the second named inventor's country of residence, accompanies this decision on petition.

Inquiries concerning this decision should be directed to the undersigned at (571) 272-3218. Any questions concerning issuance of a certificate of correction should be directed to the Certificates of Correction Branch at (571) 272-4200.

Frances Hicks
Petitions Examiner
Office of Petitions

ATTACHMENT: Corrected Filing Receipt

UNITED STATES PATENT AND TRADEMARK OFFICE

UNITED STATES DEPARTMENT OF COMMERCE
United States Patent and Trademark Office
Address: COMMISSIONER FOR PATENTS
P.O. Box 1450
Alexandria, Virginia 22313-1450
www.uspto.gov

APPL NO.	FILING OR 371(c) DATE	ART UNIT	FIL FEE REC'D	ATTY.DOCKET NO	TOT CLMS	IND CLMS
29/240,475	10/13/2005	2914	430	H01.2-11421 - US 02	1	1

CONFIRMATION NO. 6270

CORRECTED FILING RECEIPT

OC000000023243732

490
VIDAS, ARRETT & STEINKRAUS, P.A.
6109 BLUE CIRCLE DRIVE
SUITE 2000
MINNETONKA, MN 55343-9185

Date Mailed: 04/04/2007

Receipt is acknowledged of this regular Patent Application. It will be considered in its order and you will be notified as to the results of the examination. Be sure to provide the U.S. APPLICATION NUMBER, FILING DATE, NAME OF APPLICANT, and TITLE OF INVENTION when inquiring about this application. Fees transmitted by check or draft are subject to collection. Please verify the accuracy of the data presented on this receipt. **If an error is noted on this Filing Receipt, please mail to the Commissioner for Patents P.O. Box 1450 Alexandria Va 22313-1450. Please provide a copy of this Filing Receipt with the changes noted thereon. If you received a "Notice to File Missing Parts" for this application, please submit any corrections to this Filing Receipt with your reply to the Notice. When the USPTO processes the reply to the Notice, the USPTO will generate another Filing Receipt incorporating the requested corrections (if appropriate).**

Applicant(s)

Reiner Pils, Kalbe, GERMANY;
Stephane Pottier, Bagnolet Cedex, FRANCE;

Power of Attorney: The patent practitioners associated with Customer Number **490**.

Domestic Priority data as claimed by applicant

This application is a DIV of 29/197,043 01/08/2004 PAT D,520,640

Foreign Applications

GERMANY 000050471 07/10/2003

If Required, Foreign Filing License Granted: 11/08/2005

The country code and number of your priority application, to be used for filing abroad under the Paris Convention, is US29/240,475

Projected Publication Date: None, application is not eligible for pre-grant publication

Non-Publication Request: No

Early Publication Request: No

Title

PACIFIER

Preliminary Class

D24

PROTECTING YOUR INVENTION OUTSIDE THE UNITED STATES

Since the rights granted by a U.S. patent extend only throughout the territory of the United States and have no effect in a foreign country, an inventor who wishes patent protection in another country must apply for a patent in a specific country or in regional patent offices. Applicants may wish to consider the filing of an international application under the Patent Cooperation Treaty (PCT). An international (PCT) application generally has the same effect as a regular national patent application in each PCT-member country. The PCT process **simplifies** the filing of patent applications on the same invention in member countries, but **does not result** in a grant of "an international patent" and does not eliminate the need of applicants to file additional documents and fees in countries where patent protection is desired.

Almost every country has its own patent law, and a person desiring a patent in a particular country must make an application for patent in that country in accordance with its particular laws. Since the laws of many countries differ in various respects from the patent law of the United States, applicants are advised to seek guidance from specific foreign countries to ensure that patent rights are not lost prematurely.

Applicants also are advised that in the case of inventions made in the United States, the Director of the USPTO must issue a license before applicants can apply for a patent in a foreign country. The filing of a U.S. patent application serves as a request for a foreign filing license. The application's filing receipt contains further information and guidance as to the status of applicant's license for foreign filing.

Applicants may wish to consult the USPTO booklet, "General Information Concerning Patents" (specifically, the section entitled "Treaties and Foreign Patents") for more information on timeframes and deadlines for filing foreign patent applications. The guide is available either by contacting the USPTO Contact Center at 800-786-9199, or it can be viewed on the USPTO website at http://www.uspto.gov/web/offices/pac/doc/general/index.html.

For information on preventing theft of your intellectual property (patents, trademarks and copyrights), you may wish to consult the U.S. Government website, http://www.stopfakes.gov. Part of a Department of Commerce initiative, this website includes self-help "toolkits" giving innovators guidance on how to protect intellectual property in specific countries such as China, Korea and Mexico. For questions regarding patent enforcement issues, applicants may call the U.S. Government hotline at 1-866-999-HALT (1-866-999-4158).

LICENSE FOR FOREIGN FILING UNDER
Title 35, United States Code, Section 184
Title 37, Code of Federal Regulations, 5.11 & 5.15

GRANTED

The applicant has been granted a license under 35 U.S.C. 184, if the phrase "IF REQUIRED, FOREIGN FILING LICENSE GRANTED" followed by a date appears on this form. Such licenses are issued in all applications where the conditions for issuance of a license have been met, regardless of whether or not a license may be required as set forth in 37 CFR 5.15. The scope and limitations of this license are set forth in 37 CFR 5.15(a) unless an earlier license has been issued under 37 CFR 5.15(b). The license is subject to revocation upon written notification. The date indicated is the effective date of the license, unless an earlier license of similar scope has been granted under 37 CFR 5.13 or 5.14.

This license is to be retained by the licensee and may be used at any time on or after the effective date thereof unless it is revoked. This license is automatically transferred to any related applications(s) filed under 37 CFR 1.53(d). This license is not retroactive.

The grant of a license does not in any way lessen the responsibility of a licensee for the security of the subject matter as imposed by any Government contract or the provisions of existing laws relating to espionage and the national security or the export of technical data. Licensees should apprise themselves of current regulations especially with respect to certain countries, of other agencies, particularly the Office of Defense Trade Controls, Department of State (with respect to Arms, Munitions and Implements of War (22 CFR 121-128)); the Bureau of Industry and Security, Department of Commerce (15 CFR parts 730-774); the Office of Foreign Assets Control, Department of Treasury (31 CFR Parts 500+) and the Department of Energy.

NOT GRANTED

No license under 35 U.S.C. 184 has been granted at this time, if the phrase "IF REQUIRED, FOREIGN FILING LICENSE GRANTED" DOES NOT appear on this form. Applicant may still petition for a license under 37 CFR 5.12, if a license is desired before the expiration of 6 months from the filing date of the application. If 6 months has lapsed from the filing date of this application and the licensee has not received any indication of a secrecy order under 35 U.S.C. 181, the licensee may foreign file the application pursuant to 37 CFR 5.15(b).

PTO/SB/27 (05-03)
Approved for use through 04/30/2003. OMB 0651-0031
U.S. Patent and Trademark Office; U.S. DEPARTMENT OF COMMERCE
Under the Paperwork Reduction Act of 1995, no persons are required to respond to a collection of information unless it displays a valid OMB control number.

REQUEST FOR EXPEDITED EXAMINATION OF A DESIGN APPLICATION (37 CFR 1.155)

Application Number	TBD
Filing Date	October 17, 2005
First Named Inventor	Michael Aveni et al.
Title	Portion Of A Shoe Midsole
Atty Docket Number	015127.00534

113241 U.S.PTO
29/240519
101705

HAND DELIVER TO THE DESIGN GROUP DIRECTOR'S OFFICE
-or- ADDRESS TO:
MAIL STOP EXPEDITED DESIGN
COMMISSIONER FOR PATENTS
P.O. Box 1450
Alexandria, VA 22313-1450

This is a request for expedited examination of a design application under 37 CFR 1.155.

NOTE: If the Request made by this form accompanies original application papers, include form PTO/SB/18 "Design Patent Application Transmittal" or its equivalent.

A preexamination search was conducted. The field of search was:

D2/896, 902, 907, 908, 944, 945, 946, 947, 964, 967, 968, 969, 972, and 977

Related applications: ____

If not previously filed for the above-identified application, the following items required by 37 CFR 1.155 are enclosed:

Formal drawings (see 37 CFR 1.84).

The fee set forth in 37 CFR 1.17(k).

An information disclosure statement in compliance with 37 CFR 1.98.

Approved 11-9-05
Jacqueline M. Stone
Jacqueline M. Stone, Director
Technology Center 1700

October 17, 2005
Date

Anthony W. Kandare
Signature

202-824-3000
Telephone Number

Anthony W. Kandare, Reg. No. 48,830
Typed or printed name

WARNING: Information on this form may become public. Credit card information should not be included on this form. Provide credit card information and authorization on PTO-2038.

This collection of information is required by 37 CFR 1.155. The information is required to obtain or retain a benefit by the public which is to file (and by the USPTO to process) an application. Confidentiality is governed by 35 U.S.C. 122 and 37 CFR 1.14. This collection is estimated to take 6 minutes to complete, including gathering, preparing, and submitting the completed application form to the USPTO. Time will vary depending upon the individual case. Any comments on the amount of time you require to complete this form and/or suggestions for reducing this burden, should be sent to the Chief Information Officer, U.S. Patent and Trademark Office, U.S. Department of Commerce, P.O. Box 1450, Alexandria, VA 22313-1450. DO NOT SEND FEES OR COMPLETED FORMS TO THIS ADDRESS. SEND TO: Mail Stop Expedited Design, Commissioner for Patents, P.O. Box 1450, Alexandria, VA 22313-1450.

If you need assistance in completing the form, call 1-800-PTO-9199 and select option 2.

10/18/2005 SSITHIB1 00000079 190733 29240519
04 FC:1802 900.00 DA

PTO/SB/27 (08-00)
Approved for use through 10/31/2002. OMB 0651-0031
U.S. Patent and Trademark Office; U.S. DEPARTMENT OF COMMERCE
Under the Paperwork Reduction Act of 1995, no persons are required to respond to a collection of information unless it displays a valid OMB control number.

REQUEST FOR EXPEDITED EXAMINATION OF A DESIGN APPLICATION (37 CFR 1.155)		
	Application Number	29/240,526
	Filing Date	10-12-2005
	First Named Inventor	EVANS
	Title	SOLE DESIGN FOR A GOLF CLUB HEAD
	Atty Docket Number	PD2230

HAND DELIVER TO THE DESIGN GROUP DIRECTOR'S OFFICE
-or- ADDRESS TO:
COMMISSIONER FOR PATENTS
BOX EXPEDITED DESIGN
WASHINGTON, D.C. 20231

This is a request for expedited examination of a design application under 37 CFR 1.155.

NOTE: If the Request made by this form accompanies original application papers, include form PTO/SB/18 "Design Patent Application Transmittal" or its equivalent.

A preexamination search was conducted. The field of search was:
D21/759; D21/733, 752, D21/759; 473/324-331, 343-346

Approved 12-14-06
Jacqueline M. Stone
Jacqueline M. Stone, Director
Technology Center 1700/2900

Related applications: 11/275,968, 29/240,566

If not previously filed for the above-identified application, the following items required by 37 CFR 1.155 are enclosed:

Formal drawings (see 37 CFR 1.84).

The fee set forth in 37 CFR 1.17(k).

An information disclosure statement in compliance with 37 CFR 1.98.

MAY 5, 2006
Date

Signature
MICHAEL A. CATANIA
Typed or printed name

WARNING: Information on this form may become public. Credit card information should not be included on this form. Provide credit card information and authorization on PTO-2038.

Burden Hour Statement: This collection of information is required by 37 CFR 1.155. The information is used by the public to request (and the PTO to process) expedited examination of a design application. Confidentiality is governed by 35 U.S.C. 122 and 37 CFR 1.14. This form is estimated to take 6 minutes to complete. This time will vary depending upon the needs of the individual case. Any comments on the amount of time you are required to complete this form should be sent to the Chief Information Officer, U.S. Patent and Trademark Office, Washington, DC 20231. DO NOT SEND FEES OR COMPLETED FORMS TO THIS ADDRESS. SEND TO: Commissioner for Patents, Box Expedited Design, Washington, DC 20231.

PTO/SB/27 (08-00)
Approved for use through 10/31/2002. OMB 0651-0031
U.S. Patent and Trademark Office; U.S. DEPARTMENT OF COMMERCE
Under the Paperwork Reduction Act of 1995, no persons are required to respond to a collection of information unless it displays a valid OMB control number.

REQUEST FOR EXPEDITED EXAMINATION OF A DESIGN APPLICATION (37 CFR 1.155)		
	Application Number	29/240,566
	Filing Date	10-12-2005
	First Named Inventor	EVANS
	Title	SOLE DESIGN FOR A GOLF CLUB HEAD
	Atty Docket Number	PD2231

HAND DELIVER TO THE DESIGN GROUP DIRECTOR'S OFFICE
-or- ADDRESS TO:
COMMISSIONER FOR PATENTS
BOX EXPEDITED DESIGN
WASHINGTON, D.C. 20231

This is a request for expedited examination of a design application under 37 CFR 1.155.

NOTE: If the Request made by this form accompanies original application papers, include form PTO/SB/18 "Design Patent Application Transmittal" or its equivalent.

A preexamination search was conducted. The field of search was:
D21/759; D21/733, 752, D21/759; 473/324-331, 343-346

Approved 5-16-06
Jacqueline M. Stone, Director
Technology Center 1700/2900

Related applications: 11/275,968, 29/240,526

If not previously filed for the above-identified application, the following items required by 37 CFR 1.155 are enclosed:

Formal drawings (see 37 CFR 1.84).

The fee set forth in 37 CFR 1.17(k).

An information disclosure statement in compliance with 37 CFR 1.98.

MAY 5, 2006
Date

Signature
MICHAEL A. CATANIA
Typed or printed name

WARNING: Information on this form may become public. Credit card information should not be included on this form. Provide credit card information and authorization on PTO-2038.

Burden Hour Statement: This collection of information is required by 37 CFR 1.155. The information is used by the public to request (and the PTO to process) expedited examination of a design application. Confidentiality is governed by 35 U.S.C. 122 and 37 CFR 1.14. This form is estimated to take 6 minutes to complete. This time will vary depending upon the needs of the individual case. Any comments on the amount of time you are required to complete this form should be sent to the Chief Information Officer, U.S. Patent and Trademark Office, Washington, DC 20231. DO NOT SEND FEES OR COMPLETED FORMS TO THIS ADDRESS. SEND TO: Commissioner for Patents, Box Expedited Design, Washington, DC 20231.

UNITED STATES PATENT AND TRADEMARK OFFICE

Commissioner for Patents
United States Patent and Trademark Office
P.O. Box 1450
Alexandria, VA 22313-1450
www.uspto.gov

BLACK LOWE & GRAHAM PLLC
701 FIFTH AVENUE
SUITE 4800
SEATTLE WA 98104

COPY MAILED

JUL 14 2008

OFFICE OF PETITIONS

In re Application of :
Mark Gooday :
Application No. 29/240,628 : ON PETITION
Filed: October 14, 2005 :
Attorney Docket No. ADML-1-1002 :

This is a decision on the "PETITION TO RESCIND NOTICE OF ABANDONMENT", filed June 9, 2008, which is being treated as a petition under 37 CFR 1.181 to withdraw the holding of abandonment.

The petition is **GRANTED**.

This application was held abandoned for failure to timely file a response to the non-final Office action mailed October 1, 2007. This Office action set a shortened statutory period for reply of three (3) months. No reply having been received, the application became abandoned on January 2, 2008. A Notice of Abandonment was mailed on May 13, 2008.

Petitioner contends that he did timely file a reply. In support, petitioner has included a copy of a USPTO date stamped receipt for the above application, dated December 26, 2007 and itemizing an Amendment and 4 sheets of drawings.

A postcard receipt which itemizes and properly identifies the items which are being filed serves as *prima facie* evidence of receipt in the Office of all items listed thereon on the date stamped thereon by the Office. See MPEP 503.

In view thereof, **THE HOLDING OF ABANDONMENT IS WITHDRAWN.**

The application is being forwarded to Group Art Unit 2915 for consideration of the Amendment filed December 26, 2007 (copy supplied with the instant petition).

Telephone inquiries regarding this decision should be directed to the undersigned at (571)272-3207.

Cliff Congo
Petitions Attorney
Office of Petitions

UNITED STATES PATENT AND TRADEMARK OFFICE

Commissioner for Patents
United States Patent and Trademark Office
P.O. Box 1450
Alexandria, VA 22313-1450
www.uspto.gov

SOFER & HAROUN LLP
317 MADISON AVENUE SUITE 910
NEW YORK NY 10017

COPY MAILED

MAR 31 2008

OFFICE OF PETITIONS

In re Application of :
M. Patrice Laurent :
Application No. 29/240,631 : DECISION ON PETITION
Filed: October 14, 2005 :
Attorney Docket No. 979-173 :

This is a decision on the petition to withdraw the holding of abandonment under 37 CFR 1.181, filed March 14, 2008.

The petition is **GRANTED.**

The above-identified application was held abandoned for failure to timely file a response to the Supplemental Notice of Allowability, mailed November 21, 2007. This Notice set a statutory period for reply of three (3) months to submit corrected drawings. The Office mailed a Notice of Abandonment on January 7, 2008.

A review of the application file reveals the presence of corrected drawings, filed December 26, 2007. Accordingly, it is obvious that the Notice of Abandonment was mailed in error.

In view thereof, **the holding of abandonment is withdrawn.**

The Notice of Abandonment is hereby **VACATED.**

The matter is being forwarded to Group Art Unit 2912 for consideration of the corrected drawings filed December 26, 2007.

Telephone inquiries regarding this decision should be directed to the undersigned at (571)272-3207.

Cliff Congo
Petitions Attorney
Office of Petitions

PTO/SB/27 (09-04)
Approved for use through 07/31/2006. OMB 0651-0031
U.S. Patent and Trademark Office; U.S DEPARTMENT OF COMMERCE
Under the Paperwork Reduction ACT of 1995, no persons are required to respond to collection of information unless it displays a valid OMB control number.

REQUEST FOR EXPEDITED EXAMINATION OF A DESIGN APPLICATION (37 CFR 1.155)

Application Number	To be assigned
Filing Date	To be assigned
First Named Inventor	N. Scot Hull
Title	PORTION OF A SHOE UPPER
Attorney Docket Number	2465-7396.1US

113000 U.S. PTO
29/240644
101705

ADDRESS TO:
MAIL STOP EXPEDITED DESIGN
COMMISSION FOR PATENTS
P.O. BOX 1450
Alexandria, VA 22313-1450

Approved 11-9-05
Jacqueline M. Stone
Jacqueline M. Stone, Director
Technology Center 1700

This is a request for expedited examination of a design application under 37 CER 1.155.

NOTE: If the Request made by this form accompanies original application papers, include form PTO/SB/18 "Design Patent Application Transmittal" or its equivalent.

A preexamination search was conducted. The field of search was:

US. CL. D2/896, D2/897, D2/902, D2/907, D2/908, D2/910 D2/911, D2/912, D2/916, D2/922, D2/935, D2/969, D2/970, D2/971, D2/972, 36/45, 36/50.1, 36/83, 36/88, 36/89, 36/93, 36/101, 36/102, 36/103, 36/104, 36/106, 36/108, 36/109, 36/113, 36/114, 36/115, 36/116, 36/126, 36/127, 36/128, 36/129, 36/130

Related applications: _____

If not previously filed for the above-identified application, the following items required by 37 CFR 1.155 are enclosed:

- Formal drawings (see 37 CFR 1.84).
- The fee set forth in 37 CFR 1.17(k).
- An information disclosure statement in compliance with 37 CFR 1.98.

Signature — October 13, 2005 (Date)

Laurence B. Bond (Typed or printed name) — 30,549 (Registration Number, if applicable)

(801) 532-1922 (Telephone Number)

WARNING: Information on this form may become public. Credit card information should not be included on this form. Provide credit card information and authorization on PTO-2038.

This collection of information is required by37 CFR 1.155. The information is required to obtain or retain a benefit by the public which is to file (and by the USPTO to process) an application. Confidentiality is governed by 35 U.S.C. 122 and 37 CFR 1.11 and 1.14. This collection is estimated to take 6 minutes to complete, including gathering, preparing, and submitting the completed application form to the USPTO. Time will vary depending upon the individual case. Any comments on the amount of time you require to complete this form and/or suggestions for reducing this burden, should be sent to the Chief Information Officer, U.S. Patent and Trademark Office, U.S. Department of Commerce, P.O. Box 1450, Alexandria, VA 22313-1450. DO NOT SEND FEES OR COMPLETED FORMS TO THIS ADDRESS. SEND TO: **Commissioner for Patents, P.O. Box 1450, Alexandria, VA 22343-1450.**
If you need **assistance** *in completing the form, call 1-800-PTO-9199* **and select** *option 2.*

10/20/2005 WABDELR1 00000031 201469 29240644
04 FC:1802 900.00 DA

PTO/SB/27 (09-04)
Approved for use through 07/31/2006. OMB 0651-0031
U.S. Patent and Trademark Office; U.S DEPARTMENT OF COMMERCE
Under the Paperwork Reduction ACT of 1995, no persons are required to respond to collection of information unless it displays a valid OMB control number.

REQUEST FOR EXPEDITED EXAMINATION OF A DESIGN APPLICATION (37 CFR 1.155)

Application Number	To be assigned
Filing Date	To be assigned
First Named Inventor	Leonard Wozniak
Title	PORTION OF A SHOE UPPER
Attorney Docket Number	2465-7397US

113000 U.S. PTO
29/240645
101705

ADDRESS TO:
MAIL STOP EXPEDITED DESIGN
COMMISSION FOR PATENTS
P.O. BOX 1450
Alexandria, VA 22313-1450

Approved 11-9-05
Jacqueline M. Stone
Jacqueline M. Stone, Director
Technology Center 1700

This is a request for expedited examination of a design application under 37 CER 1.155.

NOTE: If the Request made by this form accompanies original application papers, include form PTO/SB/18 "Design Patent Application Transmittal" or its equivalent.

A preexamination search was conducted. The field of search was:

US. CL. D2/896, D2/897, D2/902, D2/907, D2/908, D2/910 D2/911, D2/912, D2/916, D2/922, D2/935, D2/969, D2/970, D2/971, D2/972, 36/45, 36/50.1, 36/83, 36/88, 36/89, 36/93, 36/101, 36/102, 36/103, 36/104, 36/106, 36/108, 36/109, 36/113, 36/114, 36/115, 36/116, 36/126, 36/127, 36/128, 36/129, 36/130

Related applications: _____

If not previously filed for the above-identified application, the following items required by 37 CFR 1.155 are enclosed:

- Formal drawings (see 37 CFR 1.84).
- The fee set forth in 37 CFR 1.17(k).
- An information disclosure statement in compliance with 37 CFR 1.98.

Signature — October 17, 2005 (Date)

Laurence B. Bond (Typed or printed name) — 30,549 (Registration Number, if applicable)

(801) 532-1922 (Telephone Number)

WARNING: Information on this form may become public. Credit card information should not be included on this form. Provide credit card information and authorization on PTO-2038.

This collection of information is required by37 CFR 1.155. The information is required to obtain or retain a benefit by the public which is to file (and by the USPTO to process) an application. Confidentiality is governed by 35 U.S.C. 122 and 37 CFR 1.11 and 1.14. This collection is estimated to take 6 minutes to complete, including gathering, preparing, and submitting the completed application form to the USPTO. Time will vary depending upon the individual case. Any comments on the amount of time you require to complete this form and/or suggestions for reducing this burden, should be sent to the Chief Information Officer, U.S. Patent and Trademark Office, U.S. Department of Commerce, P.O. Box 1450, Alexandria, VA 22313-1450. DO NOT SEND FEES OR COMPLETED FORMS TO THIS ADDRESS. SEND TO: Commissioner for Patents, P.O. Box 1450, Alexandria, VA 22343-1450.
If you need assistance in completing the form, call 1-800-PTO-9199 and select option 2.

10/20/2005 WABDELR1 00000082 201469 29240645
04 FC:1802 900.00 DA

PTOISB/27 (09-04)
Approved for use through 07/31/2006. OMB 0651-0031
U.S. Patent and Trademark Office; U.S DEPARTMENT OF COMMERCE
Under the Paperwork Reduction ACT of 1995, no persons are required to respond to collection of information unless it displays a valid OMB control number.

REQUEST FOR EXPEDITED EXAMINATION OF A DESIGN APPLICATION (37 CFR 1.155)

Application Number	To be assigned
Filing Date	To be assigned
First Named Inventor	Matthew Najeeb Rask
Title	PORTION OF A SHOE UPPER
Attorney Docket Number	2465-7400US

U.S. PTO 11/3000 29/240646 101/05

ADDRESS TO:
MAIL STOP EXPEDITED DESIGN
COMMISSION FOR PATENTS
P.O. BOX 1450
Alexandria, VA 22313-1450

Approved
Jacqueline M. Stone
Jacqueline M. Stone, Director
Technology Center 1700
11-9-05

This is a request for expedited examination of a design application under 37 CER 1.155.

NOTE: If the Request made by this form accompanies original application papers, include form PTO/SB/18 "Design Patent Application Transmittal" or its equivalent.

A preexamination search was conducted. The field of search was:

US. CL. D2/896, D2/897, D2/902, D2/907, D2/908, D2/910 D2/911, D2/912, D2/916, D2/922, D2/935, D2/969, D2/970, D2/971, D2/972, 36/45, 36/50.1, 36/83, 36/88, 36/89, 36/93, 36/101, 36/102, 36/103, 36/104, 36/106, 36/108, 36/109, 36/113, 36/114, 36/115, 36/116, 36/126, 36/127, 36/128, 36/129, 36/130

Related applications: _____

If not previously filed for the above-identified application, the following items required by 37 CFR 1.155 are enclosed:

- Formal drawings (see 37 CFR 1.84).
- The fee set forth in 37 CFR 1.17(k).
- An information disclosure statement in compliance with 37 CFR 1.98.

Signature — Oct. 17, 2005 (Date)

Laurence B. Bond (Typed or printed name) — 30,549 (Registration Number, if applicable)

(801) 532-1922 (Telephone Number)

WARNING: Information on this form may become public. Credit card information should not be included on this form. Provide credit card information and authorization on PTO-2038.

This collection of information is required by37 CFR 1.155. The information is required to obtain or retain a benefit by the public which is to file (and by the USPTO to process) an application. Confidentiality is governed by 35 U.S.C. 122 and 37 CFR 1.11 and 1.14. This collection is estimated to take 6 minutes to complete, including gathering, preparing, and submitting the completed application form to the USPTO. Time will vary depending upon the individual case. Any comments on the amount of time you require to complete this form and/or suggestions for reducing this burden, should be sent to the Chief Information Officer, U.S. Patent and Trademark Office, U.S. Department of Commerce, P.O. Box 1450, Alexandria, VA 22313-1450. DO NOT SEND FEES OR COMPLETED FORMS TO THIS ADDRESS. SEND TO: Commissioner for Patents, P.O. Box 1450, Alexandria, VA 22343-1450.
If you need assistance in completing the form, call 1-800-PTO-9199 and select option 2.

10/20/2005 WABDELR1 00000097 201469 29240646
04 FC:1802 900.00 DA

UNITED STATES PATENT AND TRADEMARK OFFICE

Commissioner for Patents
United States Patent and Trademark Office
P.O. Box 1450
Alexandria, VA 22313-1450
www.uspto.gov

LAW OFFICES OF JOHN CHUPA &
ASSOCIATES, P.C.
28535 ORCHARD LAKE ROAD
SUITE 50
FARMINGTON HILLS, MI 48334

COPY MAILED
DEC 13 2006
OFFICE OF PETITIONS

In re Application of

Crockett, et al. : ON PETITION

Application No. 29/240,709 :

Filing Date: October 17, 2005

Attorney Docket No. 678-003

This is a decision on the petition under 37 CFR §1.137(b), filed November 17, 2006, in the above-identified application.

The petition is **dismissed**.

Any request for reconsideration of this decision must be submitted within TWO (2) MONTHS from the mail date of this decision. Extensions of time under 37 CFR 1.136(a) are permitted. The reconsideration request should include a cover letter entitled "Renewed Petition" under 37 CFR 1.137(b)."

This application became abandoned for failure to respond in a timely manner to the Notice of Allowability mailed June 26, 2006. The notice allowed a statutory period for reply of three months from its mailing date. No reply was received within the allowable period, and the application became abandoned on September 27, 2006. A Notice of Abandonment was mailed on October 26, 2006.

Effective December 1, 1997, the provisions of 37 CFR 1.137(b) now provide that where the delay in reply was unintentional, a petition may be filed to revive an abandoned application or a lapsed patent pursuant to 37 CFR 1.137(b). A grantable petition pursuant to 37 CFR 1.137(b) must be accompanied by:

(1) the required reply, unless previously filed. In a non-provisional application abandoned for failure to prosecute, the required reply may be met by the filing of a continuing application. In an application or patent, abandoned or lapsed for failure to pay the issue fee, or any portion thereof, the required reply must be the payment of the issue fee or any outstanding balance thereof.

(2) the petition fee as set forth in 37 CFR 1.17(m);

(3) a statement that the entire delay in filing the required reply from the due date for the reply until the filing of a grantable petition pursuant to 37 CFR 1.137(b) was unintentional. The Commissioner may require additional information where there is a question whether the delay was unintentional; and

(4) any terminal disclaimer (and fee set forth in 37 CFR 1.20(d)) required pursuant to 37 CFR 1.137(d).

The instant petition does not satisfy the requirements of item (4) above.

As to item (4), the terminal disclaimer was not found with the petition papers. The subject application is a design application, therefore; a terminal disclaimer is required in order to revive the application. Any renewed petition filed must be accompanied by the completed terminal disclaimer form, which is enclosed for petitioner's convenience. Pursuant to 37 CFR 1.137(d), the terminal disclaimer must dedicate to the public a terminal part of the term of any patent granted from this application that is equivalent to the period of abandonment of the application.

Further correspondence with respect to this matter should be addressed as follows:

By mail: Mail Stop Petitions
Commissioner for Patents
United States Patent and Trademark Office
Box 1450
Alexandria, VA 22313-1450

By facsimile: (571) 273-8300

Telephone inquiries concerning this matter may be directed to the undersigned at (571) 272-3222.

Kenya A. McLaughlin
Petitions Attorney
Office of Petitions

Enclosure: "Terminal Disclaimer to Accompany Petition"

PTO/SB/63 (09-06)
Approved for use through 03/31/2007. OMB 0651-0031
U.S. Patent and Trademark Office; U.S. DEPARTMENT OF COMMERCE
Under the Paperwork Reduction Act of 1995, no persons are required to a collection of information unless it displays a valid OMB control number.

TERMINAL DISCLAIMER TO ACCOMPANY PETITION	Docket Number (Optional)

In re Application of:

Name:

Application Number:

Filed:

For:

The owner*, _____ of _____ percent interest in the above-identified application hereby disclaims a terminal part of the term of any patent granted the above-identified application equivalent to: (1) if the above-identified application is a design application, the period of abandonment of the above-identified application, and (2) if the above-identified application is a utility or plant application, the lesser of: (a) the period of abandonment of the application; or (b) the period extending beyond twenty years from the date on which the above-identified application was filed in the United States or, if the application contains a specific reference to an earlier filed application(s) under 35 U.S.C. 120, 121, or 365(c), from the date on which the earliest such application was filed. This disclaimer also applies to any patent granted on a utility or plant application filed before June 8, 1995, or a design application, that contains a specific reference under 35 U.S.C. 120, 121, or 365(c) to the above-identified application. This disclaimer is binding upon the grantee, and its successors or assigns.

Check either box 1 or 2 below, if appropriate.

1. ☐ For submissions on behalf of an organization (e.g., corporation, partnership, university, government agency, etc.), the undersigned is empowered to act on behalf of the organization.
2. ☐ The undersigned is an attorney or agent of record. Registration Number_____.

_____ _____
Signature Date

_____ _____
Typed or Printed Name Telephone Number

☐ Terminal disclaimer fee under 37 CFR 1.20(d) included.

WARNING: Information on this form may become public. Credit card information should not be included on this form. Provide credit card information and authorization on PTO-2038.

* Statement under 37 CFR 3.73(b) is required if terminal disclaimer is signed by the assignee (owner). Form PTO/SB/96 may be used for making this certification. See MPEP § 324.

This collection of information is required by 37 CFR 1.137. The information is required to obtain or retain a benefit by the public which is to file (and by the USPTO to process) an application. Confidentiality is governed by 35 U.S.C. 122 and 37 CFR 1.11 and 1.14. This collection is estimated to take 12 minutes to complete, including gathering, preparing, and submitting the completed application form to the USPTO. Time will vary depending upon the individual case. Any comments on the amount of time you require to complete this form and/or suggestions for reducing this burden, should be sent to the Chief Information Officer, U.S. Patent and Trademark Office, U.S. Department of Commerce, P.O. Box 1450, Alexandria, VA 22313-1450. DO NOT SEND FEES OR COMPLETED FORMS TO THIS ADDRESS. **SEND TO: Commissioner for Patents, P.O. Box 1450, Alexandria, VA 22313-1450.**

If you need assistance in completing the form, call 1-800-PTO-9199 and select option 2.

Privacy Act Statement

The **Privacy Act of 1974 (P.L. 93-579)** requires that you be given certain information in connection with your submission of the attached form related to a patent application or patent. Accordingly, pursuant to the requirements of the Act, please be advised that: (1) the general authority for the collection of this information is 35 U.S.C. 2(b)(2); (2) furnishing of the information solicited is voluntary; and (3) the principal purpose for which the information is used by the U.S. Patent and Trademark Office is to process and/or examine your submission related to a patent application or patent. If you do not furnish the requested information, the U.S. Patent and Trademark Office may not be able to process and/or examine your submission, which may result in termination of proceedings or abandonment of the application or expiration of the patent.

The information provided by you in this form will be subject to the following routine uses:

1. The information on this form will be treated confidentially to the extent allowed under the Freedom of Information Act (5 U.S.C. 552) and the Privacy Act (5 U.S.C 552a). Records from this system of records may be disclosed to the Department of Justice to determine whether disclosure of these records is required by the Freedom of Information Act.
2. A record from this system of records may be disclosed, as a routine use, in the course of presenting evidence to a court, magistrate, or administrative tribunal, including disclosures to opposing counsel in the course of settlement negotiations.
3. A record in this system of records may be disclosed, as a routine use, to a Member of Congress submitting a request involving an individual, to whom the record pertains, when the individual has requested assistance from the Member with respect to the subject matter of the record.
4. A record in this system of records may be disclosed, as a routine use, to a contractor of the Agency having need for the information in order to perform a contract. Recipients of information shall be required to comply with the requirements of the Privacy Act of 1974, as amended, pursuant to 5 U.S.C. 552a(m).
5. A record related to an International Application filed under the Patent Cooperation Treaty in this system of records may be disclosed, as a routine use, to the International Bureau of the World Intellectual Property Organization, pursuant to the Patent Cooperation Treaty.
6. A record in this system of records may be disclosed, as a routine use, to another federal agency for purposes of National Security review (35 U.S.C. 181) and for review pursuant to the Atomic Energy Act (42 U.S.C. 218(c)).
7. A record from this system of records may be disclosed, as a routine use, to the Administrator, General Services, or his/her designee, during an inspection of records conducted by GSA as part of that agency's responsibility to recommend improvements in records management practices and programs, under authority of 44 U.S.C. 2904 and 2906. Such disclosure shall be made in accordance with the GSA regulations governing inspection of records for this purpose, and any other relevant (*i.e.*, GSA or Commerce) directive. Such disclosure shall not be used to make determinations about individuals.
8. A record from this system of records may be disclosed, as a routine use, to the public after either publication of the application pursuant to 35 U.S.C. 122(b) or issuance of a patent pursuant to 35 U.S.C. 151. Further, a record may be disclosed, subject to the limitations of 37 CFR 1.14, as a routine use, to the public if the record was filed in an application which became abandoned or in which the proceedings were terminated and which application is referenced by either a published application, an application open to public inspection or an issued patent.
9. A record from this system of records may be disclosed, as a routine use, to a Federal, State, or local law enforcement agency, if the USPTO becomes aware of a violation or potential violation of law or regulation.

UNITED STATES PATENT AND TRADEMARK OFFICE

Commissioner for Patents
United States Patent and Trademark Office
P.O. Box 1450
Alexandria, VA 22313-1450
www.uspto.gov

LAW OFFICES OF JOHN CHUPA
& ASSOCIATES, P.C.
28535 ORCHARD LAKE ROAD
SUITE 50
FARMINGTON HILLS, MI 48334

COPY MAILED

JAN 18 2007

OFFICE OF PETITIONS

In re Application of

:

Crockett, et al.

Application No. 29/240,709

: DECISION ON PETITION

Filed: October 17, 2005

:

Attorney Docket No. 678-003

This is a decision on the renewed petition under 37 CFR 1.137(b), filed December 26, 2006, to revive the above-identified application.

The renewed petition under 37 CFR 1.137(b) is **GRANTED**.

This application became abandoned for failure to respond in a timely manner to the Notice of Allowability mailed June 26, 2006. The notice allowed a statutory period for reply of three months from its mailing date. No reply was received within the allowable period, and the application became abandoned on September 27, 2006. A Notice of Abandonment was mailed October 26, 2006. A petition under 37 CFR 1.137(b) was first filed on October 26, 2006, and dismissed by a decision mailed December 13, 2006.

The terminal disclaimer, filed December 26, 2006, is noted. The replacement drawings are noted as having been received on November17, 2006, and in duplicate on December 26, 2006.

The petition fee of $750.00 was received twice. The amount of $750.00 will be credited to deposit account 03-1723, in due course.

The application is being forwarded to the Office of Patent Publications for further processing.

Telephone inquiries concerning this decision should be directed to the undersigned at (571) 272-3222.

Kenya A. McLaughlin
Petitions Attorney
Office of Petitions

UNITED STATES PATENT AND TRADEMARK OFFICE

Commissioner for Patents
United States Patent and Trademark Office
P.O. Box 1450
Alexandria, VA 22313-1450
www.uspto.gov

MARSHALL GERSTEIN & BORUN LLP
233 S WACKER DRIVE SUITE 6300
SEARS TOWER
CHICAGO IL 60606

COPY MAILED

JUL 30 2008

OFFICE OF PETITIONS

In re Application of :
Feng, et al. :
Application No. 29/240,732 : DECISION ON PETITION
Filed: October 18, 2005 :
Attorney Docket No. 29617/PM543 :

This is a decision on the petition to withdraw the holding of abandonment under 37 CFR 1.181, filed July 11, 2008.

The petition is **GRANTED.**

The above-identified application was held abandoned for failure to timely file a response to the non-final Office action mailed September 11, 2007. This Notice set an extendable period for reply of one (1) month. Applicants filed a reply on December 14, 2007. The reply included a Certificate of Mailing dated December 11, 2007, and a one month extension of time. The Office mailed a Notice of Abandonment on May 28, 2008, stating that the reply filed on December 14, 2007 was after the period for reply set in the September 11, 2007 Office action.

A review of the extension of time filed December 14, 2007, reveals that it contained an authorization to charge any additional fees to counsels' deposit account. As such, a two month extension of time should have been charged in order to make the December 14, 2007 reply timely. See 37 CFR 1.136(a)(3). Accordingly, it is obvious that the Notice of Abandonment was mailed in error.

In view thereof, **the holding of abandonment is withdrawn.**

As a two month extension should have been charged on December 14, 2007, the $340 difference between the $120 one month extension fee and the $460 two month extension fee has been charged to Deposit Account No. 13-2855 at this time.

The matter is being forwarded to Group Art Unit 2913 for consideration of reply filed December 14, 2007.

Telephone inquiries regarding this decision should be directed to the undersigned at (571)272-3207.

Cliff Congo
Petitions Attorney
Office of Petitions

UNITED STATES PATENT AND TRADEMARK OFFICE

Commissioner for Patents
United States Patent and Trademark Office
P.O. Box 1450
Alexandria, VA 22313-1450
www.uspto.gov

Chien-Hsien Wu
P O BOX 44-2049
TAIPEI 10668 TAIWAN R.O.C.

COPY MAILED

AUG 0 9 2007

OFFICE OF PETITIONS

In re Application of :
Chien-Hsien Wu :
Application No. 29/240,780 : DECISION ON PETITION
Filed: October 19, 2005 :
Attorney Docket No. TB05P0091US :

This is a decision on the petition under 37 CFR 1.137(b), filed March 15, 2007, to revive the above-identified application. For the reason stated below, the petition is being treated as a petition under 37 CFR 1.181 requesting withdrawal of the holding of abandonment.

The petition is **GRANTED**.

This application was held abandoned for failure to timely pay the issue fee on or before January 22, 2007, as required by the Notice of Allowance and Fee(s) Due, mailed October 20, 2006. A Notice of Abandonment was mailed on February 8, 2007.

The record of this file indicates that a check for the issue fee was tendered on November 24, 2006; however, this check was returned to the USPTO. The Office of Finance has informed the Office of Petitions that the returned check was an error on the part of the bank for the USPTO. Accordingly, as the check for payment of the issue fee was timely received, this application was held abandoned in error. In view thereof, the Notice of Abandonment mailed on February 8, 2007 is hereby **vacated** and the holding of abandonment is **withdrawn**. This application has been restored to pending status.

A petition under 37 CFR 1.181 to withdraw the holding of abandonment does not require payment of a fee. Therefore, the $750 petition fee will be refunded in due course.

Telephone inquiries concerning this decision should be directed to the undersigned at (571) 272-3218.

This application is being referred to Publishing Division for appropriate processing in accordance with this decision on petition.

Frances Hicks

Frances Hicks
Petitions Examiner
Office of Petitions

UNITED STATES PATENT AND TRADEMARK OFFICE

Commissioner for Patents
United States Patent and Trademark Office
P.O. Box 1450
Alexandria, VA 22313-1450
www.uspto.gov

Chien-Hsien Wu
P O BOX 44-2049
TAIPEI 10668 TAIWAN

COPY MAILED

MAY 0 9 2007

OFFICE OF PETITIONS

In re Application of :
Chien-Hsien Wu :
Application No. 29/240,786 : DECISION ON PETITION
Filed: October 19, 2005 :
Attorney Docket No. TB05P0092US :

This is a decision on the petition under 37 CFR 1.137(b), filed March 15, 2007, to revive the above-identified application. For the reason stated below, the petition is being treated as a petition under 37 CFR 1.181 requesting withdrawal of the holding of abandonment.

The petition is **GRANTED**.

This application was held abandoned for failure to timely pay the issue fee on or before January 22, 2007, as required by the Notice of Allowance and Fee(s) Due, mailed October 20, 2006. A Notice of Abandonment was mailed on February 8, 2007.

The record of this file indicates that a check for the issue fee was tendered on November 24, 2006; however, this check was returned to the USPTO. The Office of Finance has informed the Office of Petitions that the returned check was an error on the part of the bank for the USPTO. The November 24, 2006 issue fee payment has been applied towards payment of the issue fee. As the check for payment of the issue fee was timely received, this application was held abandoned in error. In view thereof, the Notice of Abandonment mailed on February 8, 2007 is hereby **vacated** and the holding of abandonment is **withdrawn**. This application has been restored to pending status.

A petition under 37 CFR 1.181 to withdraw the holding of abandonment does not require payment of a fee. Therefore, the $750 petition fee, as well as the duplicate $400 issue fee payment, will be refunded in due course.

Telephone inquiries concerning this decision should be directed to the undersigned at (571) 272-3218.

This application is being referred to Publishing Division for appropriate processing in accordance with this decision on petition.

Frances Hicks
Petitions Examiner
Office of Petitions

UNITED STATES PATENT AND TRADEMARK OFFICE

Commissioner for Patents
United States Patent and Trademark Office
P.O. Box 1450
Alexandria, VA 22313-1450
www.uspto.gov

FELLERS SNIDER BLANKENSHIP
BAILEY & TIPPENS
THE KENNEDY BUILDING
321 SOUTH BOSTON SUITE 800
TULSA OK 74103-3318

COPY MAILED

AUG 13 2007

OFFICE OF PETITIONS

In re Patent No. D535,146 :
Issue Date: January 16, 2007 :
Application No. 29/240,795 : ON PETITION
Filed: October 18, 2005 :
Attorney Docket No. 48625/05-439 :

This is a decision on the petition filed April 13, 2007, which is being treated as a request under 37 CFR 3.81(b)[1] to correct the name of the assignee on the front page of the above-identified patent by way of a Certificate of Correction.

The request is **GRANTED**.

Telephone inquiries concerning this decision may be directed to the undersigned at (571) 272-3230. Inquiries regarding the issuance of a certificate of correction should be directed to the Certificate of Correction Branch at (571) 272-4200.

The Certificates of Correction Branch will be notified of this decision granting the petition under 37 CFR 3.81(b) and directing issuance of the requested Certificate of Correction.

Shirene Willis Brantley
Senior Petitions Attorney
Office of Petitions

[1] *See* MPEP 1309, subsection II; and Official Gazette of June 22, 2004.

UNITED STATES PATENT AND TRADEMARK OFFICE

Commissioner for Patents
United States Patent and Trademark Office
P.O. Box 1450
Alexandria, VA 22313-1450
www.uspto.gov

HARNESS, DICKEY & PIERCE, P.L.C.
P.O. BOX 8910
RESTON VA 20195

COPY MAILED

MAR 14 2007

OFFICE OF PETITIONS

In re Application of :
Nobutoshi Otsuka et al :
Application No. 29/240,868 :
Filed: October 20, 2005 :
Attorney Docket No. 93190-001365/US :

ON PETITION

This is a decision on the petition, filed March 13, 2007, under 37 CFR 1.313(c)(3) to withdraw the above-identified application from issue after payment of the issue fee.

The petition is **GRANTED**.

The above-identified application is withdrawn from issue in favor of a continued prosecution application (CPA) under 37 CFR 1.53(d).

Petitioner is advised that the issue fee paid on November 29, 2006 in the parent application is not refundable nor can it be applied towards any new Notice of Allowance which may issue on the CPA filed March 13, 2007.

Telephone inquiries should be directed to the undersigned at (571) 272-3208.

This matter is being referred to Technology Center AU 2914 for processing of the CPA.

Karen Creasy
Petitions Examiner
Office of Petitions

UNITED STATES PATENT AND TRADEMARK OFFICE

Commissioner for Patents
United States Patent and Trademark Office
P.O. Box 1450
Alexandria, VA 22313-1450
www.uspto.gov

Tim L. Brackett, Jr.
Nixon Peabody LLP
Suite 900
401 9th Street, N.W.
Washington, DC 20004-2128

COPY MAILED

SEP 28 2007

OFFICE OF PETITIONS

In re Patent No. D542778

Issue Date: May 15, 2007

Application No. 29/240,909

Filed: October 20, 2005

Attorney Docket No. **3364/2050**

ON PETITION

This is a decision on the petition filed June 21, 2007, which is being treated as a request under 37 CFR 3.81(b)[1] to correct the assignee data on the front page of the above-identified patent by way of a Certificate of Correction.

The request is **granted**.

Telephone inquiries concerning this matter may be directed to the undersigned at (571) 272-3222. Any questions concerning the issuance of the Certificate of Correction should be directed to the Certificate of Correction Branch at (703) 305-8309.

The file is being forwarded to the Certificate of Correction Branch for issuance of the requested Certificate of Correction.

Kenya A. McLaughlin
Petitions Attorney
Office of Petitions

[1] See *Official Gazette* of June 22, 2004.

UNITED STATES PATENT AND TRADEMARK OFFICE

Commissioner for Patents
United States Patent and Trademark Office
P.O. Box 1450
Alexandria, VA 22313-1450
www.uspto.gov

CARTER, DELUCA, FARRELL & SCHMIDT, LLP
445 BROAD HOLLOW ROAD
SUITE 225
MELVILLE NY 11747

In re Application of	:	AUG 26 2008
WINDMILLER, DAVID	:	
Application No.: 29/240913	:	DECISION ON
Filing or 371(c) Date: 10/20/2005	:	PETITION
Attorney Docket Number: 1446-4	:	

This is a decision in response to the "Petition to Withdraw Holding of Abandonment," filed January 28, 2007.

This Petition is hereby **DISMISSED**.

Any further petition must be submitted within TWO (2) MONTHS from the mail date of this decision. Extensions of time under 37 CFR 1.136(a) are permitted. The reconsideration request should include a cover letter entitled "Renewed Petition under [insert the applicable code section]." This is **not** final agency action within the meaning of 5 U.S.C. § 704.

Background

The above-identified application became abandoned for failure to timely and properly reply to the Office communication, mailed January 16. 2007. The Office communication set a three (3) month period for reply. A Notice of Abandonment was mailed June 7, 2007.

The present petition

Applicant files the present petition and asserts that the Examiner informed Applicant that the Examiner's Supervisor would contact someone from Publications to review the validity of the abandonment and determine if they could revive the instant application. The Supervisor who had contacted Publications which had indicated to her that the drawings filed on December 27 had overcome the rejection, however, since they were not resubmitted after the Notice of Allowance was issued, publications deemed the application abandoned.

The rule similarly states:

> If an applicant of a patent application fails to reply within the time period provided under § 1.134[1] and § 1.136, the application will become abandoned unless an Office action indicates otherwise

Here, Applicant failed to file a reply to the Office communication.

Here, there is no disagreement as to the sufficiency of the reply, because no timely or proper reply was filed. Applicant's contentions involve the cause of the abandonment, to wit, whether the Examiner was going to withdraw the Office communication? Since no timely or proper reply to the Office action was filed, the application is abandoned. As stated in the MPEP: Where there is no dispute as to whether an application is abandoned (e.g., the applicant's contentions merely involve the cause of abandonment), a petition under 37 CFR 1.137 (accompanied by the appropriate petition fee) is necessary to revive the abandoned application.

Alternate Venue

Applicant is urged to file a petition under 37 CFR 1.137(b) stating that the delay was unintentional. Corrected drawings (as replacements sheets) must be submitted along with the petition. Public Law 97-247, § 3, 96 Stat. 317 (1982), which revised patent and trademark fees, amended 35 U.S.C. § 41(a) (7) to provide for the revival of an "unintentionally" abandoned application without a showing that the delay in was "unavoidable."

The filing of a petition under 37 CFR 1.137(b) cannot be intentionally delayed and therefore must be filed promptly. A person seeking revival due to unintentional delay can not make a statement that the delay was unintentional unless the entire delay, including the delay from the date it was discovered that the application was abandoned until the filing of the petition to revive under 37 CFR 1.137(b), was unintentional. A statement that the delay was unintentional is not appropriate if petitioner intentionally delayed the filing of a petition for revive under 37 CFR 1.137(b).

Further correspondence with respect to this matter should be addressed as follows:

By mail: Director for Patents
PO Box 1450
Alexandria, VA 22313-1450

By FAX: (571) 273-8300
Attn: Office of Petitions

---

[1] 37 CFR 1.134 states: "An Office action will notify the applicant of any non-statutory or shortened statutory time period set for reply to an Office action. Unless the applicant is notified in writing that a reply is required in less than six months, a maximum period of six months is allowed." It does not differentiate as to the Office action.

By hand: Customer Service Window
Randolph Building
401 Dulany Street
Alexandria, VA 22314

Telephone inquiries concerning this Decision should be directed to the undersigned at (703) 308-9250 ext. 175.

Kay D. Pinkney
Application Assistance Unit
Office of Data Management

UNITED STATES PATENT AND TRADEMARK OFFICE

Commissioner for Patents
United States Patent and Trademark Office
P.O. Box 1450
Alexandria, VA 22313-1450
www.uspto.gov

CARTER, DELUCA,
FARRELL & SCHMIDT, LLP
445 BROAD HOLLOW ROAD
SUITE 420
MELVILLE NY 11747

COPY MAILED

NOV 2 8 2008

OFFICE OF PETITIONS

In re Application of	:	
Windmiller	:	
Application No. 29/240,913	:	DECISION
Filed: 20 October, 2005	:	
Attorney Docket No. 1446-4	:	

This is a decision on the petition, filed on 15 September, 2008, to revive under 37 C.F.R. §1.137(b) and alleging abandonment due to unintentional delay.

The petition under 37 C.F.R. §1.137(b) is **DISMISSED**.

Any request for reconsideration of this decision must be submitted within TWO (2) MONTHS from the mail date of this decision. Extensions of time under 37 CFR §1.136(a) are permitted. The reconsideration request should include a cover letter entitled "Renewed Petition under 37 CFR §1.137(b)."

This is **not** a final agency action within the meaning of 5 U.S.C. §704.

As to the Allegations
of Unintentional Delay

The requirements of a grantable petition pursuant to 37 C.F.R. §1.137(b) are the petition and fee therefor, a reply, a proper statement of unintentional delay under the regulation, and, where applicable, a terminal disclaimer and fee.

It appears that Petitioner has not satisfied the requirements of the regulation, to wit: The instant petition lacks the terminal disclaimer and fee.

BACKGROUND

The record reflects that:

Applicant, failed to reply timely and properly to the Notice of Allowance/Allowability and Fees Due (drawings requirements) mailed on 16 January, 2007, with reply due under a non-extendable deadline on or before 16 April, 2007.

The application went abandoned after midnight 16 April, 2007.

The Office mailed the Notice of Abandonment on 7 June, 2007.

For reasons that are unclear in light of—

- the express statement in the Notice of Allowability of a drawings requirement; and
- the express statement in the Notice of Abandonment of Petitioner's failure to satisfy that requirement; and
- the express requirements set forth in the commentary at MPEP §711.03(c)(I)(A) and (B) for a grant of a request to withdraw the holding of abandonment—

Petitioner sought on 28 January, 2008, to have the Office withdraw the holding of abandonment.

That request was rejected in a decision dated 26 August, 2008.

On 15 September, 2008, Petitioner filed the instant petition with fee, submitted a reply in the form of replacement drawings, and made the statement of unintentional delay. However, Petitioner has failed to satisfy the regulatory requirements in that he has failed to file a terminal disclaimer and fee.

The availability of applications and application papers online to applicants/practitioners who diligently associate their Customer Number with the respective application(s) now provides an applicant/practitioner on-demand information as to events/transactions in an application. Thus, now if one wishes to know the progress in and/or status of an application or the accuracy of the data therein, one need only look at the file online.

Out of an abundance of caution, Petitioners always are reminded that those registered to practice *and* all others who make representations before the Office must inquire into the underlying facts of representations made to the Office and support averments with the appropriate documentation–since all owe to the Office the continuing duty to disclose.[1]

---

[1] See supplement of 17 June, 1999. The Patent and Trademark Office is relying on petitioner's duty of candor and good faith and accepting a statement made by Petitioner. See Changes to Patent Practice and Procedure, 62 Fed. Reg. at 53160 and 53178, 1203 Off. Gaz. Pat. Office at 88

STATUTES, REGULATIONS

Congress has authorized the Commissioner to "revive an application if the delay is shown to the satisfaction of the Commissioner to have been "unavoidable." 35 U.S.C. §133 (1994).

The regulations at 37 C.F.R. §1.137(a) and (b) set forth the requirements for a Petitioner to revive a previously unavoidably or unintentionally, respectively, abandoned application.[2],[3]

CONCLUSION

The instant petition under 37 C.F.R. §1.137(b) is **dismissed**.

Further correspondence with respect to this matter should be addressed as follows:

By Mail:
Mail Stop PETITION
Commissioner for Patents
P. O. Box 1450
Alexandria, VA 22313-1450

By hand:
U. S. Patent and Trademark Office
Customer Service Window, Mail Stop Petitions
Randolph Building
401 Dulany Street
Alexandria, VA 22314

The centralized facsimile number is **(571) 273-8300.**

---

and 103 (responses to comments 64 and 109)(applicant obligated under 37 C.F.R. §10.18 to inquire into the underlying facts and circumstances when providing statements to the Patent and Trademark Office). See specifically, the regulations at 37 C.F.R. §10.18.

[2] See: Changes to Patent Practice and Procedure; Final Rule Notice, 62 Fed. Reg. at 53158-59 (October 10, 1997), 1203 Off. Gaz. Pat. Office at 86-87 (October 21, 1997).

[3] The language of 35 U.S.C. §133 and 37 C.F.R. §1.137(a) is clear, unambiguous, and without qualification: the delay in tendering the reply to the outstanding Office action, as well as filing the first petition seeking revival, must have been unavoidable for the reply now to be accepted on petition. (Therefore, by example, an unavoidable delay in the payment of the Filing Fee might occur if a reply is shipped by the US Postal Service, but due to catastrophic accident, the delivery is not made.) Delays in responding properly raise the question whether delays are unavoidable. Where there is a question whether the delay was unavoidable, Petitioners must meet the burden of establishing that the delay was unavoidable within the meaning of 35 U.S.C. §133 and 37 C.F.R. §1.137(a) And the Petitioner must be diligent in attending to the matter. Failure to do so does not constitute the care required under Pratt, and so cannot satisfy the test for diligence and due care. (By contrast, unintentional delays are those that do not satisfy the very strict statutory and regulatory requirements of unavoidable delay, and also, by definition, are not intentional.))

Telephone inquiries regarding this decision may be directed to the undersigned at (571) 272-3214—it is noted, however, that all practice before the Office is in writing (see: 37 C.F.R. §1.2[4]) and the proper authority for action on any matter in this regard are the statutes (35 U.S.C.), regulations (37 C.F.R.) and the commentary on policy (MPEP). Therefore, no telephone discussion may be controlling or considered authority for Petitioner's action(s).

/John J. Gillon, Jr./
John J. Gillon, Jr.
Senior Attorney
Office of Petitions

[4] The regulations at 37 C.F.R. §1.2 provide:
§1.2 Business to be transacted in writing.
All business with the Patent and Trademark Office should be transacted in writing. The personal attendance of applicants or their attorneys or agents at the Patent and Trademark Office is unnecessary. The action of the Patent and Trademark Office will be based exclusively on the written record in the Office. No attention will be paid to any alleged oral promise, stipulation, or understanding in relation to which there is disagreement or doubt.

UNITED STATES PATENT AND TRADEMARK OFFICE

Commissioner for Patents
United States Patent and Trademark Office
P.O. Box 1450
Alexandria, VA 22313-1450
www.uspto.gov

CARTER, DELUCA,
FARRELL & SCHMIDT, LLP
445 BROAD HOLLOW ROAD
SUITE 420
MELVILLE NY 11747

COPY MAILED

MAR 23 2009

OFFICE OF PETITIONS

In re Application of :
Windmiller :
Application No. 29/240,913 : DECISION
Filed: 20 October, 2005 :
Attorney Docket No. 1446-4 :

This is a decision on the petition, filed on 8 January, 2009, to revive under 37 C.F.R. §1.137(b) and alleging abandonment due to unintentional delay.

The petition as considered under 37 C.F.R. §1.137(b) is **GRANTED**.

As to Allegations of
Unintentional Delay

The requirements of a grantable petition pursuant to 37 C.F.R. §1.137(b) are the petition and fee therefor, a reply, a proper statement of unintentional delay under the regulation, and, where applicable, a terminal disclaimer and fee for, *inter alia*, a design application.

BACKGROUND

The record reflects that:

Applicant, failed to reply timely and properly to the Notice of Allowance/Allowability and Fees Due (drawings requirements) mailed on 16 January, 2007, with reply due under a non-extendable deadline on or before 16 April, 2007.

The application went abandoned after midnight 16 April, 2007.

The Office mailed the Notice of Abandonment on 7 June, 2007.

For reasons that are unclear in light of the express statement in the Notice of Allowability of a drawings requirement; and the express statement in the Notice of Abandonment of Petitioner's failure to satisfy that requirement; and the express requirements set forth in the commentary at MPEP §711.03(c)(I)(A) and (B) for a grant of a request to withdraw the holding of abandonment, Petitioner sought on 28 January, 2008, to have the Office withdraw the holding of abandonment.The request was rejected in a decision dated 26 August, 2008.

On 15 September, 2008, Petitioner filed a petition with fee, submitted a reply in the form of replacement drawings, and made the statement of unintentional delay. However, Petitioner did not satisfy file a terminal disclaimer and fee. The petition was dismissed on 28 November, 2008.

On 8 January, 2009, Petitioner filed, *inter alia*, a petition pursuant to 37 C.F.R. §1.137(b), averring unintentional delay (fee previously submitted), a reply in the form of drawings, and made the statement of unintentional delay.

The terminal disclaimer filed on 8 January, 2009, under 37 C.F.R. §1.137(d) is acknowledged/accepted.[1]

The availability of applications and application papers online to applicants/practitioners who diligently associate their Customer Number with the respective application(s) now provides an applicant/practitioner on-demand information as to events/transactions in an application.

Out of an abundance of caution, Petitioners always are reminded that those registered to practice and all others who make representations before the Office are reminded to inquire into the underlying facts of representations made to the Office and support averments with the appropriate documentation–since all owe to the Office the continuing duty to disclose.[2]

STATUTES, REGULATIONS AND ANALYSIS

Congress has authorized the Commissioner to "revive an application if the delay is shown to the satisfaction of the Commissioner to have been "unavoidable." 35 U.S.C. §133 (1994).[3]

---

[1] The regulations at 37 C.F.R. §1.137(d)(1) state that a terminal disclaimer filed pursuant to this rule must dedicate to the public a terminal part of the term of any patent granted thereon equivalent to the lesser of: 1) the period of abandonment of the application; or 2) the period extending beyond twenty years from the date on which the application for the patent was filed in the United States, or, if the application contains a specific reference to an earlier filed application(s) under 35 U.S.C. 120, 121 or 365(c), from the date on which the earliest such application was filed. Effective 20 September, 2000 (65 Fed. Reg. 54674, 8 September, 2000).

[2] See supplement of 17 June, 1999. The Patent and Trademark Office is relying on petitioner's duty of candor and good faith and accepting a statement made by Petitioner. See Changes to Patent Practice and Procedure, 62 Fed. Reg. at 53160 and 53178, 1203 Off. Gaz. Pat. Office at 88 and 103 (responses to comments 64 and 109)(applicant obligated under 37 C.F.R. §10.18 to inquire into the underlying facts and circumstances when providing statements to the Patent and Trademark Office).

[3] 35 U.S.C. §133 provides:

35 U.S.C. §133 Time for prosecuting application.

The regulations at 37 C.F.R. §1.137(a) and (b) set forth the requirements for a Petitioner to revive a previously unavoidably or unintentionally, respectively, abandoned application under this congressional grant of authority.

Unintentional delays are those that do not satisfy the very strict statutory and regulatory requirements of unavoidable delay, and also, by definition, are not intentional.[4]))

As to Allegations of
Unintentional Delay

It appears that the requirements under 37 C.F.R. §1.137(b) have been satisfied.

CONCLUSION

Accordingly, The petition under 37 C.F.R. §1.137(b) is **granted**.

The instant application is released to Office of Data Management (ODM) to be processed into a patent in due course.

Petitioner may find it beneficial to view Private PAIR within a fortnight of the instant decision to ensure that the revival has been acknowledged by the ODM in response to this decision. It is noted that all inquiries with regard to that change in status need be directed to the ODM where that change of status must be effected—that does not occur in the Office of Petitions.

Upon failure of the applicant to prosecute the application within six months after any action therein, of which notice has been given or mailed to the applicant, or within such shorter time, not less than thirty days, as fixed by the Commissioner in such action, the application shall be regarded as abandoned by the parties thereto, unless it be shown to the satisfaction of the Commissioner that such delay was unavoidable.

[4] Therefore, by example, an unintentional delay in the reply might occur if the reply and transmittal form are to be prepared for shipment by the US Postal Service, but other pressing matters distract one's attention and the mail is not timely deposited for shipment.

Telephone inquiries regarding this decision may be directed to the undersigned at (571) 272-3214—it is noted, however, that all practice before the Office is in writing (see: 37 C.F.R. §1.2[5]) and the proper authority for action on any matter in this regard are the statutes (35 U.S.C.), regulations (37 C.F.R.) and the commentary on policy (MPEP). Therefore, no telephone discussion may be controlling or considered authority for Petitioner's action(s).

/John J. Gillon, Jr./
John J. Gillon, Jr.
Senior Attorney
Office of Petitions

[5] The regulations at 37 C.F.R. §1.2 provide:

§1.2 Business to be transacted in writing.

All business with the Patent and Trademark Office should be transacted in writing. The personal attendance of applicants or their attorneys or agents at the Patent and Trademark Office is unnecessary. The action of the Patent and Trademark Office will be based exclusively on the written record in the Office. No attention will be paid to any alleged oral promise, stipulation, or understanding in relation to which there is disagreement or doubt.

SPE RESPONSE FOR CERTIFICATE OF CORRECTION

Paper No.: X

DATE : April 03, 2008

TO SPE OF : ART UNIT 2911

SUBJECT : Request for Certificate of Correction for Appl. No.: 29/240979 Patent No.: D550695 S

A response is requested with respect to a request for a certificate of correction.

With respect to the change(s) requested to correct Office and/or Applicant's errors, should the patent read as shown in the certificate of correction attached herewith or the COCIN document(s), in IFW images for the above-identified patented application? No new matter should be introduced, nor should the scope or meaning of the claims be changed.

If the response is for an IFW, within **7** days, please complete and forward the response, to the employee (named below) via scanning into application images, using document code **COCX**.

DO NOT SENT TO ATTORNEY

If the response is for a paper file wrapper, please complete the response and forward the response with the paper file wrapper, to the employee (named below), within **7** days, to:

Certificates of Correction Branch (CofC)
South Tower - 9A22
Palm Location 7580

You can fax the Directors/SPE response to 571-270-9990

LAMONTE NEWSOME
Certificates of Correction Branch
703-308-9390 ext. 112

Thank You For Your Assistance

The request for issuing the above-identified correction(s) is hereby:
Note your decision on the appropriate box.

☑ **Approved**	**All** changes apply.
☐ **Approved in Part**	Specify below which changes **do not** apply.
☐ **Denied**	State the reasons for denial below.

Comments: _____

/Cathron C Brooks/ 2911

SPE **Art Unit**

PTO/SB/27 (09-04)
Approved for use through 07/31/2006. OMB 0651-0031
U.S. Patent and Trademark Office; U.S DEPARTMENT OF COMMERCE
Under the Paperwork Reduction ACT of 1995, no persons are required to respond to collection of information unless it displays a valid OMB control number.

REQUEST FOR EXPEDITED EXAMINATION OF A DESIGN APPLICATION (37 CFR 1.155)

Application Number	To Be Assigned
Filing Date	October 21, 2005
First Named Inventor	Chin-Shu YEH et al
Title	Connector Housing of an Anti-pinching Device of a Folding Chair
Atty Docket Number	103185-54853-DES

ADDRESS TO:
MAIL STOP EXPEDITED DESIGN
COMMISSIONER FOR PATENTS
P.O. Box 1450
Alexandria, VA 22313-1450

Approved 11-9-05
Jacqueline M. Stone
Jacqueline M. Stone, Director
Technology Center 1700

12949 U.S.PTO
29/240986
102105

This is a request for expedited examination of a design application under 37 CFR 1.155.

NOTE: If the Request made by this form accompanies original application papers, include form PTO/SB/18 "Design Patent Application Transmittal" or its equivalent.

A preexamination search was conducted. The field of search was:

U.S. design patents in Class D6, subclass 368. U.S. patents in Class 297, subclasses: 55, 56 and 58.

Related applications: USSN 11/061,310 filed February 18, 2005

If not previously filed for the above-identified application, the following items required by 37 CFR 1.155 are enclosed:

- Formal drawings (see 37 CFR 1.84).
- The fee set forth in 37 CFR 1.17(k).
- An information disclosure statement in compliance with 37 CFR 1.98.

Signature	OCTOBER 21, 2005 Date
Robert J. Hess Typed or printed name	32,139 Registration Number, if applicable
(212) 649-4700 Telephone Number	

WARNING: Information on this form may become public. Credit card information should not be included on this form. Provide credit card information and authorization on PTO-2038.

10/25/2005 MAHMED1 00000050 029240986
04 FC:1802 900.00 DA

This collection of information is required by 37 CFR 1.155. The information is required to obtain or retain a benefit by the public which is to file (and by the USPTO to process) an application. Confidentiality is governed by 35 U.S.C. 122 and 37 CFR 1.11 and 1.14. This collection is estimated to take 6 minutes to complete, including gathering, preparing, and submitting the completed application form to the USPTO. Time will vary depending upon the individual case. Any comments on the amount of time you require to complete this form and/or suggestions for reducing this burden, should be sent to the Chief Information Officer, U.S. Patent and Trademark Office, U.S. Department of Commerce, P.O. Box 1450, Alexandria, VA 22313-1450. DO NOT SEND FEES OR COMPLETED FORMS TO THIS ADDRESS. SEND TO: Commissioner for Patents, P.O. Box 1450, Alexandria, VA 22313-1450.

If you need assistance in completing the form, call 1-800-PTO-9199 and select option 2.

SPE RESPONSE FOR CERTIFICATE OF CORRECTION

Paper No.: _____

DATE : 3/3/2007

TO SPE OF : ART UNIT 2900 (2913)

SUBJECT : Request for Certificate of Correction on Patent No.: D533,000 S

A response is requested with respect to the accompanying request for a certificate of correction.

Please complete this form and return with file *(PFW), within 7 days to:
Certificates of Correction Branch – 2900 South Tower ste.9A43A
Palm location 7580 or forward *(IFW) to scanning using document code **COCX**.

***Ok to enter changes to inventors as req. in COCIN?**

Ernest C. White, LIE (703) 308-9390x122
Certificates of Correction Branch

Thank You For Your Assistance

The request for issuing the above-identified correction(s) is hereby:
Note your decision on the appropriate box.

- ☒ **Approved** — **All** changes apply.
- ☐ **Approved in Part** — Specify below which changes **do not** apply.
- ☐ **Denied** — State the reasons for denial below.

Comments:

Caron D. Veynar
CARON D. VEYNAR
SUPERVISORY PATENT EXAMINER

SPE

2913
Art Unit

PTO/SB/27 (09-04)
Approved for use through 07/31/2006. OMB 0651-0031
U.S. Patent and Trademark Office; U.S DEPARTMENT OF COMMERCE
Under the Paperwork Reduction ACT of 1995, no persons are required to respond to collection of information unless it displays a valid OMB control number.

REQUEST FOR EXPEDITED EXAMINATION OF A DESIGN APPLICATION (37 CFR 1.155)

Application Number	To Be Assigned
Filing Date	October 21, 2005
First Named Inventor	Chin-Shu YEH
Title	Connector Housing of an Anti-pinching Device of a Folding Chair
Atty Docket Number	103185-54854-DES

ADDRESS TO:
MAIL STOP EXPEDITED DESIGN
COMMISSIONER FOR PATENTS
P.O. Box 1450
Alexandria, VA 22313-1450

Approved 11-9-05
Jacqueline M. Stone
Jacqueline M. Stone, Director
Technology Center 1700

112949 U.S.PTO
29240987
102105

This is a request for expedited examination of a design application under 37 CFR 1.155.

NOTE: If the Request made by this form accompanies original application papers, include form PTO/SB/18 "Design Patent Application Transmittal" or its equivalent.

A preexamination search was conducted. The field of search was:

U.S. design patents in Class D6, subclass 368. U.S. patents in Class 297, subclasses: 55, 56 and 58.

Related applications: USSN 11/061,310 filed February 18, 2005

If not previously filed for the above-identified application, the following items required by 37 CFR 1.155 are enclosed:

- Formal drawings (see 37 CFR 1.84).
- The fee set forth in 37 CFR 1.17(k).
- An information disclosure statement in compliance with 37 CFR 1.98.

Robert J. Hess	OCTOBER 21, 2005
Signature	Date
Robert J. Hess	32,139
Typed or printed name	Registration Number, if applicable
(212) 649-4700	
Telephone Number	

WARNING: Information on this form may become public. Credit card information should not be included on this form. Provide credit card information and authorization on PTO-2038.

This collection of information is required by 37 CFR 1.155. The information is required to obtain or retain a benefit by the public which is to file (and by the USPTO to process) an application. Confidentiality is governed by 35 U.S.C. 122 and 37 CFR 1.11 and 1.14. This collection is estimated to take 6 minutes to complete, including gathering, preparing, and submitting the completed application form to the USPTO. Time will vary depending upon the individual case. Any comments on the amount of time you require to complete this form and/or suggestions for reducing this burden, should be sent to the Chief Information Officer, U.S. Patent and Trademark Office, U.S. Department of Commerce, P.O. Box 1450, Alexandria, VA 22313-1450. DO NOT SEND FEES OR COMPLETED FORMS TO THIS ADDRESS. SEND TO: Commissioner for Patents, P.O. Box 1450, Alexandria, VA 22313-1450.

If you need assistance in completing the form, call 1-800-PTO-9199 and select option 2.

10/25/2005 MAHMED1 00000051 033839 29240987
04 FC:1802 900.00 DA

PTO/SB/27 (09-04)
Approved for use through 07/31/2006. OMB 0651-0031
U.S. Patent and Trademark Office; U.S. DEPARTMENT OF COMMERCE
Under the Paperwork Reduction Act of 1995, no persons are required to respond to a collection of information unless it displays a valid OMB control number.

1802

REQUEST FOR EXPEDITED EXAMINATION OF A DESIGN APPLICATION (37 CFR 1.155)

Application Number	TBA
Filing Date	October 24, 2005
First Named Inventor	Donald J. Lindsay
Title	User Interface For A Portion Of A Display Screen
Atty Docket Number	013797.01295

112949 U.S.PTO
29/240989
102405

ADDRESS TO:
MAIL STOP EXPEDITED DESIGN
COMMISSIONER FOR PATENTS
P.O. Box 1450
Alexandria, VA 22313-1450

This is a request for expedited examination of a design application under 37 CFR 1.155.

NOTE: If the Request made by this form accompanies original application papers, include form PTO/SB/18 "Design Patent Application Transmittal" or its equivalent.

A preexamination search was conducted. The field of search was:

Class D14 (subclasses 485, 486, 487, 488, 489, 490, 491, 492, 493, 494, 495); Class D18 (subclasses 24, 25, 26, 27, 28, 29, 30, 31, 32, 33); Class D19 (subclasses 6, 7); Class D20 (subclasses 11, 18); Class D21 (subclasses 324, 325, 326, 327, 328, 329, 330, 331, 332, 333); Class 345 (subclasses 683, 902), Class 715 (subclasses 700-726, 762-867 973-977)

11.9.05
Approved Jacqueline M. Stone
Jacqueline M. Stone, Director
Technology Center 1700

Related applications:

If not previously filed for the above-identified application, the following items required by 37 CFR 1.155 are enclosed:
Formal drawings (see 37 CFR 1.84).
The fee set forth in 37 CFR 1.17(k).
An information disclosure statement in compliance with 37 CFR 1.98.

Signature — October 24, 2005 (Date)

Ross A. Dannenberg (Typed or printed name) — 49,024 (Registration Number, if applicable)

(202) 824-3000
Telephone Number

WARNING: Information on this form may become public. Credit card information should not be included on this form. Provide credit card information and authorization on PTO-2038.

This collection of information is required by 37 CFR 1.155. The information is required to obtain or retain a benefit by the public which is to file (and by the USPTO to process) an application. Confidentiality is governed by 35 U.S.C. 122 and 37 CFR 1.11 and 1.14. This collection is estimated to take 6 minutes to complete, including gathering, preparing, and submitting the completed application form to the USPTO. Time will vary depending upon the individual case. Any comments on the amount of time you require to complete this form and/or suggestions for reducing this burden, should be sent to the Chief Information Officer, U.S. Patent and Trademark Office, U.S. Department of Commerce, P.O. Box 1450, Alexandria, VA 22313-1450. DO NOT SEND FEES OR COMPLETED FORMS TO THIS ADDRESS. SEND TO: **Mail Stop Expedited Design, Commissioner for Patents, P.O. Box 1450, Alexandria, VA 22313-1450.**
If you need assistance in completing the form, call 1-800-PTO-9199 and select option 2.

10/25/2005 ZJUHARI 00000089 190733 29240989
01 FC:1802 900.00 DA

UNITED STATES PATENT AND TRADEMARK OFFICE

Commissioner for Patents
United States Patent and Trademark Office
P.O. Box 1450
Alexandria, VA 22313-1450
www.uspto.gov

PEPSICO INC
C/O GOODWIN PROCTER LLP
EXCHANGE PLACE
BOSTON MA 02109

COPY MAILED

JUL 19 2006

OFFICE OF PETITIONS

In re Application of	:	
Gerald Zboch, Angie C. Noll, Richard K. Ogg	:	DECISION NOTING
	:	JOINDER OF INVENTORS
Application No. 29/241,027	:	AND PETITION UNDER
Filing Date: October 21, 2005	:	37 CFR 1.47(A) MOOT
Attorney Docket No. PEP-0377	:	

This is in response to the petitions under 37 CFR 1.47(a), filed June 19, 2006, and June 23, 2006.

With the petition filed June 19, 2006, Rule 47 applicant submitted a declaration executed by Richard K. Ogg. With the petition filed June 23, 2006, Rule 47 applicant submitted a declaration executed by Angie C. Noll. Inventor Gerald Zboch executed the declaration in a declaration filed on March 16, 2006.

In view of the **joinder** of the inventors, further consideration under 37 CFR 1.47(a) is not necessary and the petition is considered to be **moot**. This application does not have any Rule 1.47(a) status and no such status should appear on the file wrapper. This application need not be returned to this Office for further consideration under 37 CFR 1.47(a).

The matter is being forwarded to the Office of Initial Patent Examination for pre-examination processing.

Telephone inquiries concerning this decision may be directed to the undersigned at (571)272-3207.

Cliff Congo
Petitions Attorney
Office of Petitions

PTO/SB/27 (09-04)
Approved for use through 07/31/2006. OMB 0651-0031
U.S. Patent and Trademark Office; U.S DEPARTMENT OF COMMERCE
Under the Paperwork Reduction ACT of 1995, no persons are required to respond to collection of information unless it displays a valid OMB control number.

REQUEST FOR EXPEDITED EXAMINATION OF A DESIGN APPLICATION (37 CFR 1.155)

Application Number	To be assigned
Filing Date	To be assigned
First Named Inventor	Alyssa WEITZMAN
Title	FOOTWEAR OUTSOLE
Atty Docket Number	63584-5151

11/30/10 U.S.PTO
29/241050
102105

ADDRESS TO:
MAIL STOP EXPEDITED DESIGN
COMMISSIONER FOR PATENTS
P.O. Box 1450
Alexandria, VA 22313-1450

Approved
Jacqueline M. Stone
Jacqueline M. Stone, Director
Technology Center 1700
11-9-05

This is a request for expedited examination of a design application under 37 CFR 1.155.

NOTE: If the Request made by this form accompanies original application papers, include form PTO/SB/18 "Design Patent Application Transmittal" or its equivalent.

A preexamination search was conducted. The field of search was:

Class D2 - Subclasses 896, 916, 917, 918, 919, 951, 953, 954, 969

Class 36 - 11.5, 106

10/27/2005 SSITHIB1 00000003 29241050
01 FC:1802 900.00 DA

Related applications:

If not previously filed for the above-identified application, the following items required by 37 CFR 1.155 are enclosed:

- Formal drawings (see 37 CFR 1.84).
- The fee set forth in 37 CFR 1.17(k).
- An information disclosure statement in compliance with 37 CFR 1.98.

Signature — Date: 10-17-05

Steven R. Hansen — Typed or printed name

39,214 — Registration Number, if applicable

(310) 203-8080 — Telephone Number

WARNING: Information on this form may become public. Credit card information should not be included on this form. Provide credit card information and authorization on PTO-2038.

This collection of information is required by 37 CFR 1.155. The information is required to obtain or retain a benefit by the public which is to file (and by the USPTO to process) an application. Confidentiality is governed by 35 U.S.C. 122 and 37 CFR 1.11 and 1.14. This collection is estimated to take 6 minutes to complete, including gathering, preparing, and submitting the completed application form to the USPTO. Time will vary depending upon the individual case. Any comments on the amount of time you require to complete this form and/or suggestions for reducing this burden, should be sent to the Chief Information Officer, U.S. Patent and Trademark Office, U.S. Department of Commerce, P.O. Box 1450, Alexandria, VA 22313-1450. DO NOT SEND FEES OR COMPLETED FORMS TO THIS ADDRESS. SEND TO: Commissioner for Patents, P.O. Box 1450, Alexandria, VA 22313-1450.

If you need assistance in completing the form, call 1-800-PTO-9199 and select option 2.

10/27/2005 SSITHIB1 00000003 502711 29241050

American LegalNet, Inc.
www.USCourtForms.com

01

UNITED STATES PATENT AND TRADEMARK OFFICE

Commissioner for Patents
United States Patent and Trademark Office
P.O. Box 1450
Alexandria, VA 22313-1450
www.uspto.gov

PAUL R. MARTIN
5333 BAYRIDGE COURT
FAIRFIELD, CA 94534

COPY MAILED

AUG 29 2007

OFFICE OF PETITIONS

In re Application of :
Thomas John Scimone :
Application No. 29/241,064 : DECISION ON PETITION
Filed: October 24, 2005 :
Attorney Docket No. PRM-201 :

This is a decision on the petition under 37 CFR 1.137(b), filed April 17, 2007, to revive the above-identified design application.

The petition is **GRANTED**.

This application became abandoned for failure to timely pay the issue fee on or before April 26, 2006, as required by the Notice of Allowance mailed January 26, 2006. Accordingly, the date of abandonment of this application is April 27, 2006. A Notice of Abandonment was mailed on June 6, 2006.

The petition satisfies the requirements of 37 CFR 1.137(b) in that petitioner has supplied (1) the reply in the form of payment of the $400 issue fee, (2) the petition fee of $750, (3) a proper statement of unintentional delay, and (4) a terminal disclaimer and fee as required by 37 CFR 1.137(d). Accordingly, the issue fee is accepted as being unintentionally delayed.

The terminal disclaimer is accepted and has been made of record. Any continuing application filed from this application must contain a copy of the terminal disclaimer. The copy of the terminal disclaimer must be filed with a cover letter requesting the terminal disclaimer be recorded on the continuing application. A copy of this decision should be attached to the cover letter.

Telephone inquiries concerning this decision should be directed to the undersigned at (571) 272-3218.

This application is being referred to Publishing Division for further processing in accordance with this decision on petition.

Frances Hicks
Petitions Examiner
Office of Petitions

UNITED STATES PATENT AND TRADEMARK OFFICE

Commissioner for Patents
United States Patent and Trademark Office
P.O. Box 1450
Alexandria, VA 22313-1450
www.uspto.gov

PAUL R. MARTIN
5333 BAYRIDGE COURT
FAIRFIELD, CA 94534

COPY MAILED

SEP 20 2007

OFFICE OF PETITIONS

In re Application of :
Thomas John Scimone :
Application No. 29/241,064 : DECISION ON PETITION
Filed: October 24, 2005 :
Attorney Docket No. PRM-201 :

This is a SUBSTITUTE decision on the petition under 37 CFR 1.137(b), filed April 17, 2007, to revive the above-identified design application. The decision on petition mailed August 29, 2007 was improperly granted and is hereby vacated.

The petition is **DISMISSED**.

This application became abandoned for failure to timely pay the issue fee **and submit corrected drawings (as replacement sheets)** on or before April 26, 2006, as required by the Notice of Allowance and Fee(s) Due and Notice of Allowability mailed January 26, 2006. Accordingly, the date of abandonment of this application is April 27, 2006. A Notice of Abandonment was mailed on June 6, 2006.

A grantable petition under 37 CFR 1.137(b) must be accompanied by: (1) the required reply, unless previously filed; (2) the petition fee as set forth in 37 CFR 1.17(m); (3) a statement that the entire delay in filing the required reply from the due date for the reply until the filing of a grantable petition pursuant to 37 CFR 1.137(b) was unintentional; and (4) any terminal disclaimer (and fee as set forth in 37 CFR 1.20(d)) required by 37 CFR 1.137(d). Where there is a question as to whether either the abandonment or the delay in filing a petition under 37 CFR 1.137 was unintentional, the Director may require additional information. *See* MPEP 711.03(c)(II)(C) and (D). The instant petition lacks item (1).

While the issue fee as required by the Notice of Allowance has been received, the drawings required by the Notice of Allowability have not. Accordingly, before revival of this application can be effected, corrected drawings (as replacement sheets) as required by the Notice of Allowability must be submitted.

Further correspondence with respect to this matter should be addressed as follows:

By Mail: Mail Stop PETITION
Commissioner for Patents
P. O. Box 1450
Alexandria, VA 22313-1450

By hand: U. S. Patent and Trademark Office
Customer Service Window, Mail Stop Petitions
Randolph Building
401 Dulany Street
Alexandria, VA 22314

The centralized facsimile number is **(571) 273-8300.**

Correspondence regarding this decision may also be filed through the electronic filing system of the USPTO.

Telephone inquiries concerning this decision should be directed to the undersigned at (571) 272-3218.

Frances Hicks
Petitions Examiner
Office of Petitions

OIPE MAIL
OCT 22 2007
PATENT & TRADEMARK OFFICE

DAC/IFW

IN THE UNITED STATES PATENT AND TRADEMARK OFFICE
P.O. Box 1450 Alexandria, VA 22313-1450

Attn: Frances Hicks, Petition Examiner
Mail Stop: PETITION
P.O. Box 1450 Alexandria, VA

In re Application of
Thomas John Scimone
Application No. 29/241,064
Filed: October 24, 2005
Attorney Docket No. PRM-201

Renewed Petition to Revive Under 37 CFR 1.137 (b)

This paper is being submitted in response to the DECISION ON PETITION mailed from the U.S. Patent Office on Sept. 20, 2007, reversing a previous decision granting revival of the subject application, and issuance of a patent.

The stated reason for reversing the previous decision was that applicant had not submitted revised drawings as requested in the Notice of Allowability. The failure to revise the drawings was an oversight, and is being corrected herewith.

A replacement sheet of drawings is being forwarded with this Renewed Petition.

Applicant hereby requests that the DECISION ON PETITION of Sept. 20, 2007 be vacated, and that the application be revived, and permitted to issue as a patent.

The Petition Examiner is requested to contact applicant's attorney, Paul R. Martin, if for any reason the Renewed Petition to Revive cannot be granted.

Respectfully Submitted,

Paul R. Martin

Paul R. Martin
Reg. No. 24,593
Phone: (707) 208-7637

October 18, 2007

OIPE
OCT 22 2007
PATENT & TRADEMARK OFFICE

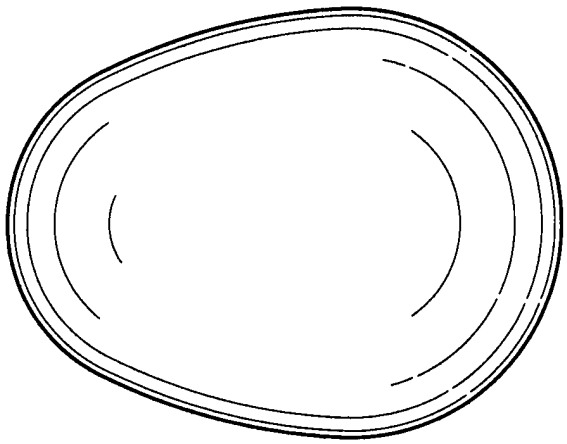

FIG. 1

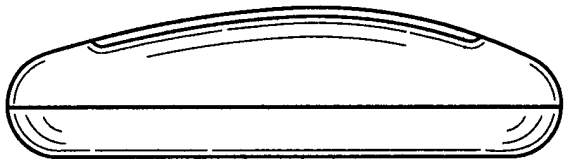

FIG. 2

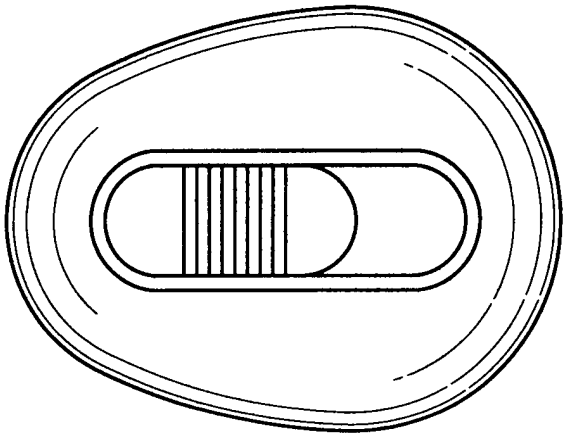

FIG. 3

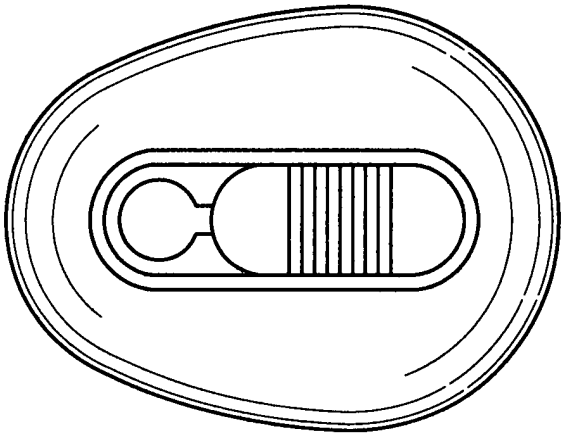

FIG. 4

UNITED STATES PATENT AND TRADEMARK OFFICE

Commissioner for Patents
United States Patent and Trademark Office
P.O. Box 1450
Alexandria, VA 22313-1450
www.uspto.gov

PAUL R. MARTIN
5333 BAYRIDGE COURT
FAIRFIELD, CA 94534

COPY MAILED

OCT 24 2007

OFFICE OF PETITIONS

In re Application of :
Thomas John Scimone :
Application No. 29/241,064 : DECISION ON PETITION
Filed: October 24, 2005 :
Attorney Docket No. PRM-201 :

This is a decision on the renewed petition under 37 CFR 1.137(b), filed October 18, 2007, to revive the above-identified design application.

The petition is **GRANTED**.

The petition now satisfies the requirements of 37 CFR 1.137(b) in that petitioner has supplied (1) the reply in the form of payment of the $400 issue fee and **corrected drawings as replacement sheets**, (2) the petition fee of $750, (3) a proper statement of unintentional delay, and (4) a terminal disclaimer and fee as required by 37 CFR 1.137(d). Accordingly, submission of the issue fee and replacement drawings is accepted as being unintentionally delayed.

As noted in the decision mailed August 29, 2007, the terminal disclaimer has been accepted and has been made of record.

Telephone inquiries concerning this decision should be directed to the undersigned at (571) 272-3218.

This application was mistakenly issued on October 23, 2007 prior to the granting of the present renewed petition. As a result, the replacement drawings filed with the petition were not printed in the issued patent. Accordingly, the Office will issue a Certificate of Correction to include these drawings as part of the printed patent. Any inconvenience caused petitioner in this matter is sincerely regretted.

Frances Hicks
Petitions Examiner
Office of Petitions

UNITED STATES PATENT AND TRADEMARK OFFICE

Commissioner for Patents
United States Patent and Trademark Office
P.O. Box 1450
Alexandria, VA 22313-1450
www.uspto.gov

LIEBERMAN & BRANDSDORFER, LLC
802 STILL CREEK LANE
GAITHERSBURG, MD 20878

COPY MAILED

JUL 07 2008

In re Application of :
James FOURNIER :
Application No. 29/241,114 : DECISION ON PETITION
Filed: October 25, 2005 :
Attorney Docket No. 1286-202 :

This is a decision on the petition under 37 CFR 1.137(b), filed May 01, 2008, to revive the above-identified design application.

The petition is **GRANTED**.

The application became abandoned for failure to reply in a timely manner to the non-final Office action mailed, June 28, 2007, which set a shortened statutory period for reply of three (3) months. No extensions of time under the provisions of 37 CFR 1.136(a) was obtained. Accordingly, the application became abandoned on September 29, 2007.

The petition satisfies the conditions for revival pursuant to the provisions of 37 CFR 1.137(b) in that (1) the reply in the form of an amendment; (2) the petition fee $770; (3) the required statement of unintentional delay; and (4) a terminal disclaimer and fee as required by 37 CFR 1.137(d). Accordingly, the reply to the non-final Office action of June 28, 2007 is accepted as having been unintentionally delayed.

The terminal disclaimer is accepted and has been made of record.

The power of attorney filed by the applicant/inventor with the petition on May 01, 2008 has been accepted and made of record.

Telephone inquiries concerning this decision should be directed to Michelle R. Eason at (571) 272-4231.

The application file is being referred to Technology Center AU 2915 for appropriate action on the concurrently filed amendment.

Michelle R. Eason
Paralegal Specialist
Office of Petitions

UNITED STATES PATENT AND TRADEMARK OFFICE

Commissioner for Patents
United States Patent and Trademark Office
P.O. Box 1450
Alexandria, VA 22313-1450
www.uspto.gov

SNELL & WILMER LLP (OC)
600 ANTON BOULEVARD
SUITE 1400
COSTA MESA CA 92626

COPY MAILED

DEC 0 7 2007

OFFICE OF PETITIONS

In re Patent No. D540,632	:	
Issue Date: April 17, 2007	:	
Application No. 29/241,132	:	NOTICE
Filed: October 24, 2005	:	
Attorney Docket No. 42565-4100	:	

This is a notice regarding your request for acceptance of a fee deficiency submission under 37 CFR 1.28. On September 1, 1998, the Court of Appeals for the Federal Circuit held that 37 CFR 1.28(c) is the sole provision governing the time for correction of the erroneous payment of the issue fee as a small entity. **See DH Technology v. Synergystex International, Inc. 154 F.3d 1333, 47 USPQ2d 1865 (Fed. Cir. Sept. 1, 1998).**

The Office no longer investigates or rejects original or reissue applications under 37 CFR 1.56. **1098 Off. Gaz. Pat. Office 502 (January 3, 1989)**. Therefore, nothing in this Notice is intended to imply that an investigation was done.

Your fee deficiency submission under 37 CFR 1.28 is hereby **ACCEPTED**.

This patent is no longer entitled to small entity status. Accordingly, all future fees paid in this patent must be paid at the large entity rate.

Liana Walsh
Petitions Examiner
Office of Petitions

UNITED STATES PATENT AND TRADEMARK OFFICE

Commissioner for Patents
United States Patent and Trademark Office
P.O. Box 1450
Alexandria, VA 22313-1450
www.uspto.gov

SUGHRUE MION, PLLC
2100 PENNSYLVANIA AVENUE, N.W.
SUITE 800
WASHINGTON DC 20037

COPY MAILED

DEC 20 2007

OFFICE OF PETITIONS

In re Patent No. D546,207 :
Application No. 29/241,134 :
Filed: October 25, 2005 : ON PETITION
Issued: July 10, 2007 :
Attorney Docket No. Q91166 :

This is a decision on the petition filed September 4, 2007, which is being treated as a request under 37 CFR 3.81(b)[1] to correct the name of the assignee on the front page of the above-identified patent by way of a Certificate of Correction.

The request is **GRANTED**.

The patent file is being forwarded to the Certificates of Correction Branch for issuance of the requested Certificate of Correction.

Telephone inquiries concerning this decision may be directed to the undersigned at (571) 272-3206. Inquiries regarding the issuance of a certificate of correction should be directed to the Certificate of Correction Branch at (571) 272-4200.

Liana Walsh
Petitions Examiner
Office of Petitions

[1] *See* MPEP 1309, subsection II; and Official Gazette of June 22, 2004.

UNITED STATES PATENT AND TRADEMARK OFFICE

Commissioner for Patents
United States Patent and Trademark Office
P.O. Box 1450
Alexandria, VA 22313-1450
www.uspto.gov

SUGHRUE MION, PLLC
2100 PENNSYLVANIA AVENUE, N.W.
SUITE 800
WASHINGTON DC 20037

COPY MAILED

DEC 20 2007

OFFICE OF PETITIONS

In re Patent No. D546,208 :
Application No. 29/241,136 :
Filed: October 25, 2005 : ON PETITION
Issued: July 10, 2007 :
Attorney Docket No. Q91165 :

This is a decision on the petition filed September 4, 2007, which is being treated as a request under 37 CFR 3.81(b)[1] to correct the name of the assignee on the front page of the above-identified patent by way of a Certificate of Correction.

The request is **GRANTED**.

The patent file is being forwarded to the Certificates of Correction Branch for issuance of the requested Certificate of Correction.

Telephone inquiries concerning this decision may be directed to the undersigned at (571) 272-3206. Inquiries regarding the issuance of a certificate of correction should be directed to the Certificate of Correction Branch at (571) 272-4200.

Liana Walsh
Petitions Examiner
Office of Petitions

[1] *See* MPEP 1309, subsection II; and Official Gazette of June 22, 2004.

PTO/SB/27 (05-03)
Approved for use through 04/30/2003. OMB 0651-0031
U.S. Patent and Trademark Office; U.S. DEPARTMENT OF COMMERCE
Under the Paperwork Reduction Act of 1995, no persons are required to respond to a collection of information unless it displays a valid OMB control number.

REQUEST FOR EXPEDITED EXAMINATION OF A DESIGN APPLICATION (37 CFR 1.155)

Application Number	TBD
Filing Date	October 26, 2005
First Named Inventor	Michael Aveni et al.
Title	Portion Of A Shoe Midsole
Atty Docket Number	015127.00610

12849 U.S.PTO
10/26/05
29241201

HAND DELIVER TO THE DESIGN GROUP DIRECTOR'S OFFICE
-or- ADDRESS TO:
MAIL STOP EXPEDITED DESIGN
COMMISSIONER FOR PATENTS
P.O. Box 1450
Alexandria, VA 22313-1450

This is a request for expedited examination of a design application under 37 CFR 1.155.

NOTE: If the Request made by this form accompanies original application papers, include form PTO/SB/18 "Design Patent Application Transmittal" or its equivalent.

A preexamination search was conducted. The field of search was:

D2/896, 902, 907, 908, 943, 944, 945, 946, 947, 961, 964, 967, 968, 969, 972, 973, 974, and 977

Related applications: _____

If not previously filed for the above-identified application, the following items required by 37 CFR 1.155 are enclosed:

Formal drawings (see 37 CFR 1.84).

The fee set forth in 37 CFR 1.17(k).

An information disclosure statement in compliance with 37 CFR 1.98.

Approved 1-5-06
Jacqueline M. Stone
Jacqueline M. Stone, Director
Technology Center 3700

October 26, 2005
Date

Anthony W. Kandare
Signature

202-824-3000
Telephone Number

Anthony W. Kandare, Reg. No. 48,830
Typed or printed name

WARNING: Information on this form may become public. Credit card information should not be included on this form. Provide credit card information and authorization on PTO-2038.

This collection of information is required by 37 CFR 1.155. The information is required to obtain or retain a benefit by the public which is to file (and by the USPTO to process) an application. Confidentiality is governed by 35 U.S.C. 122 and 37 CFR 1.14. This collection is estimated to take 6 minutes to complete, including gathering, preparing, and submitting the completed application form to the USPTO. Time will vary depending upon the individual case. Any comments on the amount of time you require to complete this form and/or suggestions for reducing this burden, should be sent to the Chief Information Officer, U.S. Patent and Trademark Office, U.S. Department of Commerce, P.O. Box 1450, Alexandria, VA 22313-1450. DO NOT SEND FEES OR COMPLETED FORMS TO THIS ADDRESS. SEND TO: Mail Stop Expedited Design, Commissioner for Patents, P.O. Box 1450, Alexandria, VA 22313-1450.

If you need assistance in completing the form, call 1-800-PTO-9199 and select option 2.

10/27/2005 SSITHIB1 00000036 190733 29241201
01 FC:1802 900.00 DA

UNITED STATES PATENT AND TRADEMARK OFFICE

Commissioner for Patents
United States Patent and Trademark Office
P.O. Box 1450
Alexandria, VA 22313-1450
www.uspto.gov

SUGHRUE MION, PLLC
2100 PENNSYLVANIA AVENUE, N.W.
SUITE 800
WASHINGTON DC 20037

COPY MAILED

JAN 09 2008

OFFICE OF PETITIONS

In re Application of :
Pitts et al. :
Application No. 29/241,240 : DECISION ON PETITION
Filed: 10/26/2005 :
Attorney Docket No. Q91135 :

This is a decision on the petition under 37 CFR 1.181, filed October 29, 2007, to withdraw the holding of abandonment for the above-identified application.

On November 18, 2005, the Office mailed a Notice to File Missing Parts of Nonprovisional Application, which set an extendable period of two months for reply. On February 17, 2006, applicants filed an executed declaration and paid the required surcharge. On August 28, 2007, the Office mailed a Notice of Abandonment, which stated that the above-identified application was abandoned in view of applicants' failure to file a proper reply to the Notice to File Missing Parts mailed on November 18, 2005. The Notice further indicated that the reply received on February 17, 2006, was untimely.

In the present petition, applicants averred that the application was not abandoned and requested that the Office withdraw the holding of abandonment. Specifically, applicants stated that they filed a timely response on February 17, 2006. Applicants asserted that the Transmittal letter of October 26, 2005, contained a general authorization to charge any necessary fees to the Deposit Account, and therefore, the Office could have charged applicants' Deposit account for a one-month extension of time to respond to the Notice to File Missing Parts.

Applicants' assertions are well taken. 37 CFR 1.136(a)(3)(B) provides that: " an authorization to charge all required fees, fees under 37 CFR 1.17, or all required extension of time fees will be treated as a constructive petition for an extension of time in any concurrent or future reply requiring a petition for an extension of time under 37 CFR 1.136(a) to be timely."

The record reveals that applicants filed a general authorization to charge all fees required on October 26, 2005. Therefore, the Office should have charged applicants' Deposit Account for an extension of time for response within the first month so that the reply would be timely.

Accordingly, the petition to withdraw the holding of abandonment is **granted**. The Notice of Abandonment was mailed in error and is hereby withdrawn. The application is restored to pending status in view of the fact that a response was timely filed and received on February 17, 2006.

The Office has charged the $120.00 extension of time fee for filing a response within the first month to applicants' Deposit Account as authorized.

The matter is being referred to the Office of Patent Application Processing for further processing of the application.

Telephone inquiries concerning this matter may be directed to the undersigned at (571) 272-3211.

Christina Tartera Donnell

Christina Tartera Donnell
Senior Petitions Attorney
Office of Petitions

UNITED STATES PATENT AND TRADEMARK OFFICE

Commissioner for Patents
United States Patent and Trademark Office
P.O. Box 1450
Alexandria, VA 22313-1450
www.uspto.gov

TOPE-MCKAY & ASSOCIATES
23852 PACIFIC COAST HIGHWAY #311
MALIBU CA 90265

COPY MAILED

JUN 23 2008

OFFICE OF PETITIONS

In re Application of	:	
Terence Higuchi	:	
Application No. 29/241,247	:	DECISION GRANTING PETITION
Filed: October 24, 2005	:	UNDER 37 CFR 1.137(b)
Attorney Docket No. JPI061-D	:	

This is a decision on the petition under 37 CFR 1.137(b), filed October 1, 2007, to revive the above-identified application.

The petition is **GRANTED**.

The petition satisfies the conditions for revival pursuant to the provisions of 37 CFR 1.137(b) in that (1) the reply in the form of the issue fee, drawings and terminal disclaimer/fee; (2) the petition fee; and (3) the required statement of unintentional delay have been received. Accordingly, the reply to the Notice of Allowance/Notice of Allowability mailed March 22, 2007, is accepted as having been unintentionally delayed.

Telephone inquiries concerning this decision should be directed to the undersigned at (571) 272-3208.

This application is being referred to the Office of Data Management to be processed into a patent and for review of the drawings submitted on October 1, 2007.

Karen Creasy
Petitions Examiner
Office of Petitions

UNITED STATES PATENT AND TRADEMARK OFFICE

COMMISSIONER FOR PATENTS
UNITED STATES PATENT AND TRADEMARK OFFICE
P.O. BOX 1450
ALEXANDRIA, VA 22313-1450
www.uspto.gov

THE PROCTER & GAMBLE COMPANY
INTELLECTUAL PROPERTY DIVISION - WEST BLDG.
WINTON HILL BUSINESS CENTER - BOX 412
6250 CENTER HILL AVENUE
CINCINNATI OH 45224

COPY MAILED

SEP 19 2007

OFFICE OF PETITIONS

In re Application of :
Jill M. Shurtleff et al :
Application No. 29/241,377 : ON PETITION
Filed: 26 October 2005 :
Attorney Docket No. 00216-755001/T-749 :

This is a decision on the petition under 37 CFR 1.137(b), filed June 15, 2007, to revive the above-identified application.

The petition is **GRANTED**.

The application became abandoned for failure s to timely pay the issue on or before June 12, 2007, as required by the Notice of Allowance and Fee(s) Due, mailed March 12, 2007, which set a statutory period for reply of three (3) months. Accordingly, the application became abandoned on September 13, 2007.

The petition satisfies the requirements of 37 CFR 1.137(b) in that petitioner has supplied (1) the reply in the form of payment of the Issue Fee of $800.00 and the Terminal Disclaimer and requisite Fee of $130.00, (2) the petition fee of $750.00; and (3) a statement of unintentional delay. Accordingly, the Issue Fee is accepted as having been unintentionally delayed.

Telephone inquiries concerning this decision should be directed to Charles Smoot at (571) 272-3299, or in his absence the undersigned at (571) 272-7099.

The application file is being referred to the Publishing Division to be processed into a patent.

David Bucci
Petitions Examiner
Office of Petitions

PTO/SB/27 (09-04)
Approved for use through 07/31/2006. OMB 0651-0031
U.S. Patent and Trademark Office; U.S DEPARTMENT OF COMMERCE
Under the Paperwork Reduction ACT of 1995, no persons are required to respond to collection of information unless it displays a valid OMB control number.

REQUEST FOR EXPEDITED EXAMINATION OF A DESIGN APPLICATION (37 CFR 1.155)

Application Number	To be assigned
Filing Date	Concurrently herewith
First Named Inventor	Geoff DEAS
Title	FOOTWEAR OUTSOLE
Atty Docket Number	63584-5152

113000 U.S.PTO
29/241387
102605

ADDRESS TO:

MAIL STOP EXPEDITED DESIGN
COMMISSIONER FOR PATENTS
P.O. Box 1450
Alexandria, VA 22313-1450

This is a request for expedited examination of a design application under 37 CFR 1.155.

NOTE: If the Request made by this form accompanies original application papers, include form PTO/SB/18 "Design Patent Application Transmittal" or its equivalent.

Approved 12/19/05
Jacqueline M. Stone
Jacqueline M. Stone, Director
Technology Center 1700

A preexamination search was conducted. The field of search was:

Class D2 - Subclasses 896, 907, 908, 947, 948, 951, 953, 959, 960

01/01/2005 MAHMED1 00000010 100440 29241387
04 FC:1802 900.00 DP

Related applications:

If not previously filed for the above-identified application, the following items required by 37 CFR 1.155 are enclosed:

- Formal drawings (see 37 CFR 1.84).
- The fee set forth in 37 CFR 1.17(k).
- An information disclosure statement in compliance with 37 CFR 1.98.

Signature

Oct. 26, 2005
Date

Michelle C. Kim
Typed or printed name

51,881
Registration Number, if applicable

310-203-8080
Telephone Number

WARNING: Information on this form may become public. Credit card information should not be included on this form. Provide credit card information and authorization on PTO-2038.

This collection of information is required by 37 CFR 1.155. The information is required to obtain or retain a benefit by the public which is to file (and by the USPTO to process) an application. Confidentiality is governed by 35 U.S.C. 122 and 37 CFR 1.11 and 1.14. This collection is estimated to take 6 minutes to complete, including gathering, preparing, and submitting the completed application form to the USPTO. Time will vary depending upon the individual case. Any comments on the amount of time you require to complete this form and/or suggestions for reducing this burden, should be sent to the Chief Information Officer, U.S. Patent and Trademark Office, U.S. Department of Commerce, P.O. Box 1450, Alexandria, VA 22313-1450. DO NOT SEND FEES OR COMPLETED FORMS TO THIS ADDRESS. SEND TO: Commissioner for Patents, P.O. Box 1450, Alexandria, VA 22313-1450.

If you need assistance in completing the form, call 1-800-PTO-9199 and select option 2.

American LegalNet, Inc.
www.USCourtForms.com

3746231v1

PTO/SB/27 (05-03)
Approved for use through 04/30/2003. OMB 0651-0031
U.S. Patent and Trademark Office; U.S. DEPARTMENT OF COMMERCE
Under the Paperwork Reduction Act of 1995, no persons are required to respond to a collection of information unless it displays a valid OMB control number.

REQUEST FOR EXPEDITED EXAMINATION OF A DESIGN APPLICATION (37 CFR 1.155)

Application Number	TO BE ASSIGNED
Filing Date	October 28, 2005
First Named Inventor	Michael Hui
Title	Portion Of A Shoe Upper
Atty Docket Number	015127.00608

112949 U.S PTO
29/241391
102805

HAND DELIVER TO THE DESIGN GROUP DIRECTOR'S OFFICE
-or- ADDRESS TO:
MAIL STOP EXPEDITED DESIGN
COMMISSIONER FOR PATENTS
P.O. Box 1450
Alexandria, VA 22313-1450

This is a request for expedited examination of a design application under 37 CFR 1.155.

NOTE: If the Request made by this form accompanies original application papers, include form PTO/SB/18 "Design Patent Application Transmittal" or its equivalent.

A preexamination search was conducted. The field of search was:

D2/896, 902, 907, 908, 943, 944, 969, 972, 973 and 974

Related applications: ____

If not previously filed for the above-identified application, the following items required by 37 CFR 1.155 are enclosed:

Formal drawings (see 37 CFR 1.84).

The fee set forth in 37 CFR 1.17(k).

An information disclosure statement in compliance with 37 CFR 1.98.

Approved 11-9-05
Jacqueline M. Stone
Jacqueline M. Stone, Director
Technology Center 1700

October 28, 2005
Date

David R. Gerk
Signature

202-824-3000
Telephone Number

David R. Gerk – Reg. No. 56,901
Typed or printed name

WARNING: Information on this form may become public. Credit card information should not be included on this form. Provide credit card information and authorization on PTO-2038.

This collection of information is required by 37 CFR 1.155. The information is required to obtain or retain a benefit by the public which is to file (and by the USPTO to process) an application. Confidentiality is governed by 35 U.S.C. 122 and 37 CFR 1.14. This collection is estimated to take 6 minutes to complete, including gathering, preparing, and submitting the completed application form to the USPTO. Time will vary depending upon the individual case. Any comments on the amount of time you require to complete this form and/or suggestions for reducing this burden, should be sent to the Chief Information Officer, U.S. Patent and Trademark Office, U.S. Department of Commerce, P.O. Box 1450, Alexandria, VA 22313-1450. DO NOT SEND FEES OR COMPLETED FORMS TO THIS ADDRESS. SEND TO: Mail Stop Expedited Design, Commissioner for Patents, P.O. Box 1450, Alexandria, VA 22313-1450.

If you need assistance in completing the form, call 1-800-PTO-9199 and select option 2.

10/31/2005 JBALINAN 00000078 190733 29241391
04 FC:1802 900.00 DA

UNITED STATES PATENT AND TRADEMARK OFFICE

Commissioner for Patents
United States Patent and Trademark Office
P.O. Box 1450
Alexandria, VA 22313-1450
www.uspto.gov

STETINA BRUNDA GARRED & BRUCKER
75 ENTERPRISE, SUITE 250
ALISO VIEJO, CA 92656

COPY MAILED

JAN 0 9 2006

OFFICE OF PETITIONS

In re Application of :
Steven J. Kern :
Application No. 29/241,393 : DECISION ON PETITION
Filed: October 27, 2005 : UNDER 37 CFR 313(c)(2)
Attorney Docket No. ZENET-020D :

This is a decision on the petition, filed January 6, 2006, under 37 CFR 1.313(c)(2) to withdraw the above-identified application from issue after payment of the issue fee.

The petition is **DISMISSED**.

Petitioner requests that the above-identified application be withdrawn from issue for consideration of a submission (Information Disclosure Statement) under 37 CFR 1.114 (request for continued examination).

The filing of a request for continued examination is improper since the provisions of 37 CFR 1.114 do not apply to design applications.[1] However, the filing of a continued prosecution application (CPA) pursuant to the provisions of 37 CFR 1.53(d) would be appropriate in the instant application in order to have the application withdrawn from issue for consideration of an Information Disclosure Statement after payment of the issue fee.

In view of the above, petitioner must submit a request for a CPA pursuant to the provisions of 37 CFR 1.53(d) if it is desired to have this application withdrawn from issue. Petitioner is reminded that the filing of a request for a CPA must be received and the petition to withdraw from issue granted prior to the issuance of this application into a patent.[2] If petitioner desires to pursue withdrawal of this application from issue, **a renewed petition under 37 CFR 1.313(c)(2), along with a request for a CPA under 37 CFR 1.53(d), must be submitted.**

---

[1] *Note* 1271 OG 143 (June 24, 2003) and 68 Fed. Reg. 32376 (May 30, 2003).

[2] *Note* 37 CFR 1.313(d).

The renewed petition under 37 CFR 1.313(c)(2) and request for a CPA should be submitted by facsimile transmission to 571-273-0025.

Any questions concerning this matter may be directed to the undersigned at (571) 272-3218.

Frances Hicks
Petitions Examiner
Office of Petitions

UNITED STATES PATENT AND TRADEMARK OFFICE

Commissioner for Patents
United States Patent and Trademark Office
P.O. Box 1450
Alexandria, VA 22313-1450
www.uspto.gov

COPY MAILED

JAN 20 2006

OFFICE OF PETITIONS

STETINA BRUNDA GARRED & BRUCKER
75 ENTERPRISE, SUITE 250
ALISO VIEJO, CA 92656

In re Application of	:	
Steven J. Kern	:	
Application No. 29/241,393	:	ON PETITION
Filed: October 27, 2005	:	
Attorney Docket No. ZENET-020D	:	

This is a decision on the renewed petition under 37 CFR 1.313(c)(2), filed January 12, 2006 to withdraw the above-identified application from issue after payment of the issue fee.

The petition is **GRANTED**.

The above-identified application is hereby withdrawn from issue in favor of a continued prosecution application (CPA) under 37 CFR 1.53(d).

Petitioner is advised that the issue fee paid on December 9, 2005 in the parent application is not refundable nor can it be applied towards any new Notice of Allowance which may issue on the CPA filed January 12, 2006.

Telephone inquiries should be directed to the undersigned at (571) 272-3210.

This matter is being referred to Technology Center AU 2913 for processing of the CPA and consideration of the IDS.

Irvin Dingle
Petitions Examiner
Office of Petitions

SPE RESPONSE FOR CERTIFICATE OF CORRECTION

Paper No.: _____

DATE : 6/30/2008

TO SPE OF : ART UNIT 2915

SUBJECT : Request for Certificate of Correction for Appl. No.: 29/241,396 Patent No.: D541,711

Please respond to this request for a certificate of correction within 7 days.

Please review the requested changes/corrections as shown in the **COCIN** document(s) in the IFW application image. No new matter should be introduced, nor should the scope or meaning of the claims be changed.

Please complete the response (see below) and forward the completed response to scanning using document code **COCX**.

ML McAskill, Manager
Certificates of Correction Branch
703-308-9250 ext. 130

Thank You For Your Assistance

The request for issuing the above-identified correction(s) is hereby:

Note your decision on the appropriate box.

X **Approved**	**All** changes apply.
☐ **Approved in Part**	Specify below which changes **do not** apply.
☐ **Denied**	State the reasons for denial below.

Comments: _____

/Robert M. Spear/ 2915
SPE **Art Unit**

UNITED STATES PATENT AND TRADEMARK OFFICE

Commissioner for Patents
United States Patent and Trademark Office
P.O. Box 1450
Alexandria, VA 22313-1450
www.uspto.gov

INTELLECTUAL PROPERTY LAW GROUP LLP
12 SOUTH FIRST STREET
SUITE 1205
SAN JOSE, CA 95113

COPY MAILED

JUL 31 2007

OFFICE OF PETITIONS

In re Application of	:	
Toshiaki Sakamoto	:	
Application No. 29/241,408	:	DECISION ON PETITION
Filed: October 26, 2005	:	
Attorney Docket No.	:	
BENNYKONG.HIRO.DP1	:	

This is a decision on the petition under 37 CFR 1.55(a)(2), filed June 22, 2007, for entry of priority papers submitted after the date the issue fee was paid.

The petition is **GRANTED**.

Receipt is acknowledged of papers submitted under 35 U.S.C. § 119(a)-(d).

The priority papers are accepted as timely filed and have been placed of record in the file.

Petitioner is advised that the rule affecting the submission of a claim for priority or a certified priority document under 37 CFR 1.55(a) was changed effective November 7, 2000. In effect, the Office will permit applicants to file a priority claim or certified priority document with the processing fee set forth in 37 CFR 1.17(i) between the date the issue fee is paid and the date a patent is issued. The Office will, however, merely place such submission in the application file but will not attempt to determine whether the applicant has met the conditions of 35 U.S.C. § 119(a)-(d) to make the priority claim nor include the priority information in the text of the patent. In such a situation, the patent will not contain the priority claim information. The patentee may request a certificate of correction and a determination of entitlement for such priority

will be made after the patent is granted. *See* Federal Register/Vol. 65, No. 175, September 8, 2000, page 54622.

Since this matter is presently before the deciding official in the Office of Petitions, action on the petition under 37 CFR 1.55(a)(2) has been undertaken. However, if the printing of the patent has progressed to the point where the priority data cannot be included on the printed patent, petitioner may request a certificate of correction pursuant to the provisions of 37 CFR 323 and pay the required fee of $100.

Any questions concerning this decision should be directed to the undersigned at (571) 272-3219. Any questions concerning the issuance of a Certificate of Correction should be directed to the Certificate of Corrections Branch at (571) 272-4200.

The patent file is being directed to Publishing Division for processing into a patent.

Nancy Johnson
Senior Petitions Attorney
Office of Petitions

UNITED STATES PATENT AND TRADEMARK OFFICE

COMMISSIONER FOR PATENTS
UNITED STATES PATENT AND TRADEMARK OFFICE
P.O. BOX 1450
ALEXANDRIA, VA 22313-1450
www.uspto.gov

COPY MAILED

JUN 21 2007

OFFICE OF PETITIONS

RADER, FISHMAN & GRAUER PLLC
39533 WOODWARD AVENUE
SUITE 140
BLOOMFIELD HILLS MI 48304-0610

In re Application of :
Klinkman, et al. : DECISION GRANTING STATUS
Application No. 29/241,526 : UNDER 37 CFR 1.47(a)
Filed: October 28, 2005 :
Atty. Dkt. No.: 65042-0505 :
For: LOW PROFILE LIGHT :

This decision is in response to the petitions under 37 CFR 1.47(a) and 37 CFR 1.137(b), filed April 5, 2007.

DECISION UNDER 37 CFR 1.47(a)

A decision on the petition filed pursuant to 37 CFR 1.47(a) is hereby HELD IN ABEYANCE due to the fact that the instant application remains ABANDONED.

DECISION UNDER 37 CFR 1.137(b)

This application became abandoned February 14, 2006 for failure to timely reply to the Notice to File Missing Parts of Non-Provisional Application mailed December 13, 2005. The Notice set a two month shortened statutory period of time for reply. No petition for extension of time in accordance with 37 C.F.R. § 1.136 was timely submitted. Notice of Abandonment was mailed August 16, 2006.

A grantable petition pursuant to 37 C.F.R. § 1.137(b) must be accompanied by: (1) the required reply to the outstanding Office action or notice, unless previously filed; (2) the petition fee as set forth in 37 C.F.R. § 1.17(m); (3) a statement that the entire delay in filing the required reply from the due date for the reply until the filing of a grantable petition pursuant to 37 C.F.R. § 1.137(b) was unintentional; and (4) any terminal disclaimer (and fee set forth in 37 C.F.R. § 1.20(d)) required pursuant to 37 C.F.R. § 1.137(c).

The instant petition fails to satisfy requirement (4) set forth above.

Accordingly, the instant petition is hereby **DISMISSED**.

Any renewed petition must include the required terminal disclaimer (including fee). *See*, 37 CFR 1.137(d).

Any request for reconsideration of this decision must be submitted within **TWO (2) MONTHS** from mail date of this decision. Extensions of time under 37 CFR 1.136(a) are permitted. The reconsideration request should include a cover letter entitled "Renewed Petition under 37 CFR 1.47(a) and 1.137(b)." This is not a final agency decision.

Further correspondence with respect to this matter should be addressed as follows:

By mail: **Mail Stop Petition**
Commissioner for Patents
P.O. Box 1450
Alexandria, VA 22313-1450

By facsimile: (571) 273-8300

By hand delivery: U.S. Patent and Trademark Office
Customer Window, **Mail Stop Petition**
Randolph Building
401 Dulany Street
Alexandria, VA 22314 Further

Telephone inquiries regarding this decision should be directed to the undersigned at (571) 272-3205.

Alesia M. Brown
Petitions Attorney
Office of Petitions

UNITED STATES PATENT AND TRADEMARK OFFICE

COMMISSIONER FOR PATENTS
UNITED STATES PATENT AND TRADEMARK OFFICE
P.O. BOX 1450
ALEXANDRIA, VA 22313-1450
www.uspto.gov

COPY MAILED

SEP 26 2007

OFFICE OF PETITIONS

RADER, FISHMAN & GRAUER PLLC
39533 WOODWARD AVENUE
SUITE 140
BLOOMFIELD HILLS MI 48304-0610

In re Application of :
Klinkman, et al. : DECISION ON PETITION
Application No. 29/241,526 :
Filed: October 28, 2005 :
Atty. Dkt. No.: 65042-0505 :
For: LOW PROFILE LIGHT :

This decision is in response to the renewed petitions under 37 CFR 1.47(a) and 37 CFR 1.137(b), filed August 20, 2007.

DECISION UNDER 37 CFR 1.47(a)[i]

The petition is **GRANTED**.

Petitioners have shown that the non-signing inventor has refused to execute the declaration for the above-identified application and/or cannot be reached or located for presentation and execution of same, and is thus unavailable.

The above-identified application and papers have been reviewed and found in compliance with 37 CFR 1.47(a). This application is hereby accorded Rule 1.47(a) status.

As provided in Rule 1.47(c), this Office will forward notice of this application's filing to the non-signing inventors at the addresses given in the petition. Notice of the filing of this application will also be published in the Official Gazette.

DECISION UNDER 37 CFR 1.137(b)

This application became abandoned February 14, 2006 for failure to timely reply to the Notice to File Missing Parts of Non-Provisional Application mailed December 13, 2005. The Notice set a two month shortened statutory period of time for reply. No petition for extension of time in accordance with 37 C.F.R. § 1.136 was timely submitted. Notice of Abandonment was mailed August 16, 2006.

A grantable petition pursuant to 37 C.F.R. § 1.137(b) must be accompanied by: (1) the required reply to the outstanding Office action or notice, unless previously filed; (2) the petition fee as set forth in 37 C.F.R. § 1.17(m); (3) a statement that the entire delay in filing the required reply from the due date for the reply until the filing of a grantable petition pursuant to 37 C.F.R. § 1.137(b) was unintentional; and (4) any terminal disclaimer (and fee set forth in 37 C.F.R. § 1.20(d)) required pursuant to 37 C.F.R. § 1.137(c).

The instant petition has been reviewed and found in compliance with the provisions of 37 C.F.R. § 1.137(b). Accordingly, the failure to timely submit a proper reply to the Notice is accepted as having been unintentionally delayed.

Accordingly, the instant petition is hereby **GRANTED**.

This application is being forwarded to the Office of Initial Patent Examination for further review.

Telephone inquiries regarding this decision should be directed to the undersigned at (571) 272-3205.

Alesia M. Brown
Petitions Attorney
Office of Petitions

---

[1] In accordance with 37 CFR 1.47(a), the petition must set forth the last known address of the non-signing inventor. The last known address is presumed to be as set forth in the declaration submitted 04/05/2007. If this presumption is incorrect, petitioners are required to notify the Office within two months of the mail date set forth above.

UNITED STATES PATENT AND TRADEMARK OFFICE

COMMISSIONER FOR PATENTS
UNITED STATES PATENT AND TRADEMARK OFFICE
P.O. BOX 1450
ALEXANDRIA, VA 22313-1450
www.uspto.gov

COPY MAILED

SEP 26 2007

OFFICE OF PETITIONS

Robert H. Miller
47517 Putney Ct.
Canton, MI 48188

In re Application of :
Klinkman, et al. : LETTER
Application No. 29/241,526 :
Filed: October 28, 2005 :
Atty. Dkt. No.: 65042-0505 :
For: LOW PROFILE LIGHT :

Dear Sir:

You are named as an inventor in the above-identified United States patent application filed under the provisions of 35 U.S.C. 116 (United States Code) and 37 C.F.R. § 1.47(a), Rules of Practice in Patent Cases. Should a patent be granted on the application you will be designated therein as a joint inventor.

As a named inventor you are entitled to inspect any paper in the file wrapper of the application, order copies of all or any part thereof (at a prepaid cost as per 37 C.F.R. § 1.19) or make your position of record in the application. Alternatively, you may arrange to do any of the preceding through a registered patent attorney or agent presenting written authorization from you. If you care to join the application, counsel of record (see below) would presumably assist you. Joining in the application would entail the filing of an appropriate oath or declaration by you pursuant to 37 C.F.R. § 1.63.

Requests for information regarding your application should be directed to the File Information Unit at (703) 308-2733. Information regarding how to pay for and order a copy of the application, or a specific paper in the application, should be directed to Certification Division at (703) 308-9726 or 1-800-972-6382 (outside the Washington D.C. area).

Alesia M. Brown
Petitions Attorney
Office of Petitions

UNITED STATES PATENT AND TRADEMARK OFFICE

Commissioner for Patents
United States Patent and Trademark Office
P.O. Box 1450
Alexandria, VA 22313-1450
www.uspto.gov

GROSSMAN, TUCKER, PERREAULT & PFLEGER, PLLC
55 SOUTH COMMERICAL STREET
MANCHESTER NH 03101

COPY MAILED
MAY 11 2006
OFFICE OF PETITIONS

In re Application of	:	
Fabian Hoffman	:	
Application No.29/241,544	:	DECISION REFUSING STATUS
Filed: October 28, 2005	:	UNDER 37 C.F.R. §1.47(b)
Attorney Docket Number: HHS103	:	
Title: Spectacles	:	

This is in response to the petition under 37 C.F.R. §1.47(b), filed April 13, 2006 (certificate of mailing April 10, 2006).

Rule 47 applicant is given **TWO MONTHS** from the mailing date of this decision to reply, correcting the below-noted deficiencies. Any reply should be entitled "Request for Reconsideration of Petition Under 37 C.F.R. §1.47(b)," and should only address the deficiencies noted below, except that the reply may include an oath or declaration executed by the non-signing inventor. **Failure to respond will result in abandonment of the application**. Any extensions of time will be governed by 37 C.F.R. §1.136(a).

The above-identified application was filed on October 28, 2005, without an executed oath or declaration, and naming Gail Keller as the sole inventor. Accordingly, on December 8, 2005, a Notice to File Missing Parts of Application - Filing Date Granted was mailed, requiring applicant to submit an executed oath or declaration and pay a surcharge for late filing. The Notice set an extendable two month period for reply.

In reply, applicant filed the instant petition, the petition fee, the surcharge for late filing of the declaration, and a declaration. To make timely a two month extension of time fee was provided.

A grantable petition under 37 C.F.R. §1.47(b) requires: (1) proof that the non-signing inventor cannot be reached or refuses to sign the oath or declaration; (2) an acceptable oath or declaration; (3) the petition fee; (4) a statement of last known address of the non-signing inventor; (5) proof of proprietary interest; and (6) a showing that such action is necessary to preserve the rights of parties or to prevent irreparable damage. Rule 47 applicant has failed to establish (2), (5), and (6).

An Acceptable Oath or Declaration

As to item (2), applicant failed to submit a properly executed oath or declaration with the petition. In addition to including the non-signing inventor's information, the granting of 47 status requires a rule 47 (b) applicant to make the oath required by 37 CFR §1.63 and §1.64. Where applicant is a corporation, an officer of the corporation normally is required to sign the oath or declaration. The declaration must state the full name, residence, post office address, and citizenship of the non-signing inventor. The title or position of the person signing must also be stated if signing on behalf of a corporation under 37 CFR §1.47(b). See MPEP 409.03(b). A corporation may authorize any person, including an attorney or agent registered to practice before the U.S. Patent and Trademark Office, to sign the application oath or declaration on its behalf. Where an oath or declaration is signed by a registered attorney or agent on behalf of a corporation, either proof of the attorney's or agent's authority in the form of a statement signed by an appropriate corporate officer must be submitted, or the attorney or agent may simply state that he or she is authorized to sign on behalf of the corporation.

Although petitioner has provided his registration number, petition should specifically state position as patent attorney or attorney of record. Further petitioner has not provided proof of attorney's authority to execute the declaration on behalf of the assignee.

Proof of Proprietary Interest

As to item (5), proprietary interest is usually found by establishing a) the invention has been assigned to applicant, or b) the inventor has agreed in writing to assign the invention to the applicant or c) the applicant otherwise has sufficient proprietary interest in the subject matter to justify the filing of the application. Although petitioner has provided the reel and frame number of the assignment, petitioner has failed to provide a statement under 37 CFR 3.73(b). If the application has been assigned, a copy of the assignment (in the English language) must be submitted. A statement under 37 CFR 3.73(b) by the assignee must also be submitted (see MPEP § 324). See MPEP 409.03(f).

Showing That Such Action Is Necessary to Preserve the Rights of Parties or to Prevent Irreparable Damage.

As to item (6), applicant has failed to provide a statement that the granting of rule 47 status is necessary to preserve the rights of the rule 47 applicant or prevent irreparable damage. See MPEP 409.03(h).

Further correspondence with respect to this matter should be addressed as follows:

By mail:

Mail Stop Petition
Commissioner for Patents
P.O. Box 1450
Alexandria, VA 22313-1450

By facsimile: (571) 273-8300

By delivery service: U.S. Patent and Trademark Office

(FedEx, UPS, DHL, etc.) Customer Service Window, Mail Stop Petition
Randolph Building
401 Dulany Street
Alexandria, VA 22314

Telephone inquiries regarding this decision should be directed to the undersigned at (571) 272-3215.

Charlema R. Grant
Petitions Attorney
Office of Petitions

UNITED STATES PATENT AND TRADEMARK OFFICE

Commissioner for Patents
United States Patent and Trademark Office
P.O. Box 1450
Alexandria, VA 22313-1450
www.uspto.gov

GROSSMAN, TUCKER, PERREAULT & PFLEGER, PLLC
55 SOUTH COMMERCIAL STREET
MANCHESTER NH 03101

COPY MAILED

SEP 18 2006

OFFICE OF PETITIONS

In re Application of
Fabian Hofmann
Application No. 29/241,544
Filed: October 28, 2005
Attorney Docket Number: HHS103
Title of Invention: Spectacles

DECISION ACCORDING STATUS
UNDER 37 C.F.R. §1.47(b)

This is in response to the renewed petition for status under 37 C.F.R. §1.47(b), filed August 1, 2006.

The petition is **GRANTED**.

Applicant has satisfied the requirements of §1.47(b)[1]. Applicant, by declaration of persons with first hand knowledge and documentary evidence, demonstrated that the non-signing inventor has refused to sign the declaration. This declaration has been reviewed and is found in compliance with 1.63 and 1.64. Applicant paid the petition fee and included a statement of the non-signing inventor's last known address in the petition. Proprietary interest in the application has been established.

This application is hereby accorded Rule 1.47(b) status.

Pursuant to petitioner's request, a one month extension of time fee in the amount of $60 is being charged to deposit account 50-2121. The May 11, 2006 petition decision provided petitioner with an extendable two month period for reply. The two month reply period expired on July 11, 2006.

As provided in new Rule 1.47(c), this Office will forward notice of this application's filing to the non-signing inventor at the address given in the petition. Notice of the filing of this application will also be published in the Official Gazette.

---

[1] A grantable petition under 37 C.F.R. §1.47(b) requires: (1) proof that the non-signing inventor cannot be reached or refuses to sign the oath or declaration; (2) an acceptable oath or declaration; (3) the petition fee; (4) a statement of last known address of the non-signing inventor; (5) proof of proprietary interest; and (6) proof of irreparable damage.

The application file is being forwarded to the Office of Initial Patent Examination for processing.

Telephone inquiries regarding this decision should be directed to the undersigned at (571) 272-3215.

Charlema R. Grant

Charlema R. Grant
Petitions Attorney
Office of Petitions

UNITED STATES PATENT AND TRADEMARK OFFICE

Commissioner for Patents
United States Patent and Trademark Office
P.O. Box 1450
Alexandria, VA 22313-1450
www.uspto.gov

Fabian Hofmann
Bredowstrasse 8
10551 Berlin
Germany

COPY MAILED

SEP 18 2006

OFFICE OF PETITIONS

In re Application of
Fabian Hofmann
Application No. 29/241,544
Filed: October 28, 2005
Attorney Docket Number: HHS103
Title of Invention: Spectacles

: LETTER

Dear Mr. Hofmann:

You are named as the sole inventor in the above-identified United States patent application filed under the provisions of 35 U.S.C. 118 (United States Code) and 37 CFR 1.47(b). Should a patent be granted on the application you will be designated therein as a co-inventor.

As the named inventor you are entitled to inspect any paper in the file wrapper of the application, order copies of all or any part thereof (at a prepaid cost per 37 CFR 1.19) or make your position of record in the application. Alternatively, you may arrange to do any of the preceding through a registered patent attorney or agent presenting written authorization from you. If you care to join the application, counsel of record (see below) would presumably assist you. Joining in the application would entail the filing of an appropriate oath or declaration by you pursuant to 37 CFR 1.63.

Telephone inquiries regarding this communication should be directed to Petitions Attorney Charlema R. Grant at (571) 272-3215. Requests for information regarding your application should be directed to the File Information Unit at (703) 308-2733. Information regarding how to pay for and order a copy of the application, or a specific paper in the application, should be directed to Certification Division at (703) 308-9726 or 1-800-972-6382 (outside the Washington D.C. area).

C. Grant

Charlema R. Grant
Petitions Attorney
Office of Petitions

GROSSMAN, TUCKER, PERREAULT & PFLEGER, PLLC
55 SOUTH COMMERICAL STREET
MANCHESTER NH 03101
ATTN: DONALD J. PERREAULT

UNITED STATES PATENT AND TRADEMARK OFFICE

Commissioner for Patents
United States Patent and Trademark Office
P.O. Box 1450
Alexandria, VA 22313-1450
www.uspto.gov

ROBERT M. DOWNEY, P.A.
6751 N. FEDERAL HWY., SUITE 300
BOCA RATON, FL 33487

COPY MAILED

AUG 0 6 2007

OFFICE OF PETITIONS

In re Application of

Eddie Chang

Application No. 29/241,566

Filed: October 28, 2005

Attorney Docket No. MANNPA305

DECISION ON PETITION

This is a decision on the "Petition to Accord a New Filing Date under 37 CFR 1.10" filed February 21, 2007, and in duplicate on March 9, 2007. The petition will be treated under 37 CFR 1.10(d).

The petition is **dismissed.**

Any request for reconsideration of this decision must be submitted within TWO (2) MONTHS from the mail date of this decision. Extensions of time under 37 CFR 1.136(a) are permitted. The reconsideration request should include a cover letter entitled "Renewed Petition" under 37 CFR 1.10(e)."

Petitioner requests that the filing date for the subject application be changed to October 21, 2005, as this was the date that petitioner deposited the application with the United States Postal Service (USPS), Express Mail Service. The package had a tracking number of EV788120818US. Petitioner maintains that the postal emergency caused by Hurricane Wilma resulted in the package not being processed until October 28, 2005 and being accorded a "date-in" of the same date.

Section 1.10(d) of the Title 37 of the Code of Federal Regulations indicates if a showing is made that the "date-in" on the Express Mail label was incorrectly entered or omitted by the United States Postal Service, a petition to accord the correspondence a filing date as of the date the correspondence is shown to have been deposited with the United States Postal Service, provided that:

(1) the petition is filed promptly after the person becomes aware that the Office has accorded or will accord a filing date based upon an incorrect entry by the USPS;

(2) the number on the Express Mail mailing label was placed on a paper(s) or fee(s) that constitute the correspondence prior to the original mailing by Express Mail; and

(3) the petition includes a showing which established, to the satisfaction of the Commissioner, that the requested filing date was the date the correspondence was deposited in the "Express Mail Post Office to Addressee" service prior to the last scheduled pickup for that day. Any showing pursuant to this paragraph must be corroborated by evidence from the USPS or that came into being after deposit and within

one business day of the deposit of the correspondence in the "Express Mail Post office to Addressee" service of the USPS.

The instant petition does not satisfy the requirements of item (1) and (3) above.

As to item (1) above, petitioner has not established that the instant petition was filed promptly after petitioner became aware that the filing date accorded the application was incorrect. The filing date accorded the application is October 28, 2005, yet the petition to correct the filing date was not filed until February 21, 2007. The renewed petition must establish that the petitioner filed the instant petition promptly after petitioner became aware that the application was accorded an incorrect filing date.

As to item (3), Section 513 of the *Manual of Patent Examining Procedure*, provides in pertinent part, that:

> The showing under 37 CFR 1.10(d) must be corroborated by (1) evidence from the USPS, or (2) evidence that came into being after deposit and within one business day of the deposit of the correspondence as "Express Mail." Evidence from the USPS may be the "Express Mail" Corporate Account Mailing Statement. Evidence that came into being within one day after the deposit of the correspondence as "Express Mail" may be in the form of a log book which contains information such as the "Express Mail" number; the application number, attorney docket number or other such file identification number; the place, date and time of deposit; the time of the last scheduled pick-up for that date and place of deposit; the depositor's initials or signature; and the date and time of entry in the log.
>
> The reason the Office considers correspondence to have been filed as of the date of deposit as "Express Mail" is that this date has been verified by a disinterested USPS employee, through the insertion of a "date-in," or other official USPS notation, on the "Express Mail" mailing label. Due to the questionable reliability of evidence from a party other than the USPS that did not come into being contemporaneously with the deposit of the correspondence with the USPS, 37 CFR 1.10(d) specifically requires that any petition under 37 CFR 1.10(d) be corroborated either by evidence from the USPS, or by evidence that came into being after deposit and within one business day after the deposit of the correspondence as "Express Mail."
>
> A petition alleging that the USPS erred in entering the "date-in" will be denied if it is supported only by evidence (other than from the USPS) which was:
>
> (A) created prior to the deposit of the correspondence as "Express Mail" with the USPS (e.g., an application transmittal cover letter, or a client letter prepared prior to the deposit of the correspondence); or
>
> (B) created more than one business day after the deposit of the correspondence as "Express Mail" (e.g., an affidavit or declaration prepared more than one business day after the correspondence was deposited with the USPS as "Express Mail").
>
> On the other hand, a notation in a log book, entered after deposit by the person who deposited the correspondence as "Express Mail" within one business day of such deposit, setting forth the items indicated above, would be deemed on petition to be an adequate showing of the date of deposit under 37 CFR 1.10(d)(3).

Any renewed petition filed must provide evidence from the USPS or that came into being after deposit and within one business day of the deposit of the correspondence in the "Express Mail Post Office to Addressee" service of the USPS.

Further correspondence with respect to this matter should be addressed as follows:

By mail: Mail Stop Petitions
Commissioner for Patents
Box 1450
Alexandria, VA 22313-1450

By facsimile: (571)273-8300
Attn: Office of Petitions

Telephone inquiries concerning this decision should be directed to the undersigned at (571) 272-3222

Kenya A. McLaughlin
Petitions Attorney
Office of Petitions

UNITED STATES PATENT AND TRADEMARK OFFICE

Commissioner for Patents
United States Patent and Trademark Office
P.O. Box 1450
Alexandria, VA 22313-1450
www.uspto.gov

EGBERT LAW OFFICES
412 MAIN STREET, 7TH FLOOR
HOUSTON TX 77002

COPY MAILED

APR 29 2008

OFFICE OF PETITIONS

In re Application of
Alma Rosa VAZQUEZ GASTELLU
Application No. 29/241,579
Filed: October 21,2005
Attorney Docket No. **2074-10**

DECISION ON PETITION

This is a decision on the petition under 37 CFR 1.137(b), filed February 27, 2008, to revive the above-identified design application.

The petition is **GRANTED**.

The application became abandoned for failure to timely pay the issue fee on or before February 14, 2008, as required by the Notice of Allowance and Fee(s) Due, mailed November 14, 2007, which set a statutory period for reply of three (3) months. Accordingly, the application became abandoned on February 15, 2008. A Notice of Abandonment was mailed on March 19, 2008.

The petition satisfies the requirements of 37 CFR 1.137(b) in that petitioner has supplied (1) the reply in the form of the $410 issue fee, (2) the petition fee of $770, (3) a proper statement of unintentional delay, and (4) a terminal disclaimer and fee as required by 37 CFR 1.137(d). Accordingly, the failure to timely pay the issue fee as required by the Notice of Allowance and Fees is accepted as being unintentionally delayed.

The terminal disclaimer is accepted and has been made of record. Any continuing application filed from this application must contain a copy of the terminal disclaimer. The copy of the terminal disclaimer must be filed with a cover letter requesting the terminal disclaimer be recorded on the continuing application. A copy of this decision should be attached to the cover letter.

Telephone inquiries concerning this decision should be directed to Tredelle Jackson at (571) 272-2783.

This application is being referred to Publishing Division for further processing in accordance with this decision on petition.

David Bucci
Petitions Examiner
Office of Petitions

UNITED STATES PATENT AND TRADEMARK OFFICE

Commissioner for Patents
United States Patent and Trademark Office
P.O. Box 1450
Alexandria, VA 22313-1450
www.uspto.gov

ROZSA LAW GROUP LC
18757 BURBANK BOULEVARD
SUITE 220
TARZANA CA 91356-3346

COPY MAILED

MAY 0 6 2009

OFFICE OF PETITIONS

In re Application of	:	
Morad, Fred I.	:	
Application No. 29/241,582	:	ON PETITION
Filed: October 28, 2005	:	
Attorney Docket No. 23260.204	:	

This is a decision on the petition under 37 C.F.R. § 1.137(b), filed February 12, 2009, to revive the above-identified application.

The petition is **GRANTED**.

The petition satisfies the requirements of 37 CFR 1.137(b) in that petitioner has supplied (1) the reply in the form of a Continued Prosecution Application (CPA) Request, (2) the petition fee, (3) a proper statement of unintentional delay and (4) a Terminal Disclaimer and fee.

Telephone inquiries concerning this decision should be directed to the undersigned at (571) 272-3206.

This matter is being referred to Technology Center AU 2914 for further processing of the CPA request filed concurrently with the instant petition.

Liana Walsh
Petitions Examiner
Office of Petitions

UNITED STATES PATENT AND TRADEMARK OFFICE

Commissioner for Patents
United States Patent and Trademark Office
P.O. Box 1450
Alexandria, VA 22313-1450
www.uspto.gov

SPECKMAN LAW GROUP PLLC
1201 THIRD AVENUE, SUITE 330
SEATTLE, WA 98101

COPY MAILED

APR 16 2009

OFFICE OF PETITIONS

In re Application of :
Ryuji Aoyama :
Application No. 29/241,598 : ON PETITION
Filed: October 28, 2005 :
Attorney Docket No. 83000.2003 :

This is a decision on the petition under the unintentional provisions of 37 CFR 1.137(b), filed February 17, 2009, to revive the above-identified application.

The petition is **DISMISSED**.

Any request for reconsideration of this decision must be submitted within TWO (2) MONTHS from the mail date of this decision. Extensions of time under 37 CFR 1.136(a) are permitted. The reconsideration request should include a cover letter entitled "Renewed Petition under 37 CFR 1.137(b)." This is **not** a final agency action within the meaning of 5 U.S.C. § 704.

A grantable petition under 37 CFR 1.137(b)[1] must be accompanied by: (1) the required reply,[2] unless previously filed, (2) the petition fee as set forth in 37 CFR 1.17(m), (3) a statement that the entire delay in filing the required reply from the due date for the reply until the filing of a grantable petition pursuant to 37 CFR 1.137(b) was unintentional, and (4) any terminal disclaimer (and fee as set forth in 37 CFR 1.20(d)) required by 37 CFR 1.137(d). Where there is a question as to whether either the abandonment or the delay in filing a petition under 37 CFR 1.137 was unintentional, the Director may require additional information. See MPEP 711.03(c)(II)(C) and (D).

The petition lacks item (4) above. Since the above-identified application is a design application, 37 CFR 1.137(d) requires a terminal disclaimer dedicating to the public a terminal part of the term of any patent granted thereon equivalent to the period of abandonment of the application. The period of abandonment will be computed to be the number of months from the date of abandonment to the date of filing a grantable petition. A terminal disclaimer fee of $140 ($70 if small entity) is required.

[1] As amended effective December 1, 1997. See Changes to Patent Practice and Procedure: Final Rule Notice, 62 Fed. Reg. 53131, 5194-95 (October 10, 1997), 1203 Off. Gaz. Pat. Office 63, 119-20 (October 21, 1997).

[2] In a nonprovisional application abandoned for failure to prosecute, the required reply may be met by the filing of a continuing application. In an application or patent, abandoned or lapsed for failure to pay the issue fee or any portion thereof, the required reply must be the payment of the issue fee or any outstanding balance thereof.

Further correspondence with respect to this matter should be addressed as follows:

By Mail: Mail Stop PETITION
Commissioner for Patents
P. O. Box 1450
Alexandria, VA 22313-1450

By hand: U. S. Patent and Trademark Office
Customer Service Window, Mail Stop Petitions
Randolph Building
401 Dulany Street
Alexandria, VA 22314

The centralized facsimile number is **(571) 273-8300.**

Telephone inquiries concerning this decision should be directed to Alicia Kelley at (571) 272-6059.

/SDB/

Sherry D. Brinkley
Petitions Examiner
Office of Petitions

UNITED STATES PATENT AND TRADEMARK OFFICE

Commissioner for Patents
United States Patent and Trademark Office
P.O. Box 1450
Alexandria, VA 22313-1450
www.uspto.gov

SPECKMAN LAW GROUP PLLC
1201 THIRD AVENUE, SUITE 330
SEATTLE, WA 98101

MAILED

JUL 30 2009

OFFICE OF PETITIONS

In re Application of :
Ryuji Aoyama :
Application No. 29/241,598 : ON PETITION
Filed: October 28, 2005 :
Attorney Docket No. 83000.2003 :

This is a decision on the renewed petition under the unintentional provisions of 37 CFR 1.137(b), filed April 23, 2009, to revive the above-identified application.

The petition is **GRANTED**.

The application became abandoned for failure to timely file a reply within the meaning of 37 CFR 1.113 to the final Office action of November 19, 2007. The proposed reply required for consideration of a petition to revive must be a Notice of Appeal (and appeal fee required by 37 CFR 41.20(b)(2), an amendment that prima facie places the application in condition for allowance, a Request for Continued Examination and submission (37 CFR 1.114), or the filing of a continuing application under 37 CFR 1.53(b). See MPEP 711.03(c)(II)(A)(2). In view of the 3-month extension of time filed May 19, 2008, the application became abandoned on May 20, 2008. On February 17, 2009 a petition under 37 CFR 1.137(b) was filed; however, the petition was dismissed in a decision mailed April 16, 2009. In response, on April 23, 2009, the present petition was filed.

The petition satisfies the requirements of 37 CFR 1.137(b) in that petitioner has supplied (1) the reply in the form of an amendment; (2) the petition fee of $810; (3) an adequate statement of unintentional delay; and (4) a terminal disclaimer and fee of $70 as required by 37 CFR 1.137(d).

The terminal disclaimer is accepted and has been made of record. Any continuing application filed from this application must contain a copy of the terminal disclaimer. The copy of the terminal disclaimer must be filed with a cover letter requesting the terminal disclaimer be recorded on the continuing application. A copy of this decision should be attached to the cover letter.

Telephone inquiries concerning this decision should be directed to Alicia Kelley at (571) 272-6059.

This application is being referred to Technology Center AU 2912 for appropriate action in the normal course of business on the reply received February 17, 2009.

/SDB/

Sherry D. Brinkley
Petitions Examiner
Office of Petitions

UNITED STATES PATENT AND TRADEMARK OFFICE

Commissioner for Patents
United States Patent and Trademark Office
P.O. Box 1450
Alexandria, VA 22313-1450
www.uspto.gov

TOWNSEND AND TOWNSEND AND CREW, LLP
TWO EMBARCADERO CENTER, EIGHTH FLOOR
SAN FRANCISCO CA 94111-3834

COPY MAILED

FEB 2 1 2007

OFFICE OF PETITIONS

In re Application of :
BRADY, Floyd William :
Application No. 29/241,618 :
Filed: October 27, 2005 :
Attorney Docket No. 011345-007600US :

DECISION ON PETITION

This is a decision on the petition under 37 CFR 1.137(b), filed December 27, 2006, to revive the above-identified application.

A grantable petition under 37 CFR 1.137(b) must be accompanied by: (1) the required reply, unless previously filed; (2) the petition fee as set forth in 37 CFR 1.17(m); (3) a statement that the entire delay in filing the required reply from the due date for the reply until the filing of a grantable petition pursuant to 37 CFR 1.137(b) was unintentional; and (4) any terminal disclaimer (and fee as set forth in 37 CFR 1.20(d)) required by 37 CFR 1.137(d). The present petition lacks item (4) a terminal disclaimer, including the $65 fee as set forth in 37 CFR 1.20(d).

Accordingly, the petition is **DISMISSED**.

Any request for reconsideration of this decision must be submitted within TWO (2) MONTHS from the mail date of this decision. Extensions of time under 37 CFR 1.136(a) are permitted. The reconsideration request should include a cover letter entitled "Renewed Petition under 37 CFR 1.137(b)." This is **not** a final agency action within the meaning of 5 U.S.C. § 704.

Further correspondence with respect to this matter should be addressed as follows:

By Mail:
Mail Stop PETITION
Commissioner for Patents
P. O. Box 1450
Alexandria, VA 22313-1450

By hand: U. S. Patent and Trademark Office
Customer Service Window, Mail Stop Petitions
Randolph Building
401 Dulany Street
Alexandria, VA 22314

The centralized facsimile number is **(571) 273-8300.**

Telephone inquiries concerning this decision should be directed to Monica Graves at (571) 272-7253.

Sherry D. Brinkley
Petitions Examiner
Office of Petitions

UNITED STATES PATENT AND TRADEMARK OFFICE

Commissioner for Patents
United States Patent and Trademark Office
P.O. Box 1450
Alexandria, VA 22313-1450
www.uspto.gov

TOWNSEND AND TOWNSEND AND CREW, LLP
TWO EMBARCADERO CENTER, EIGHTH FLOOR
SAN FRANCISCO CA 94111-3834

COPY MAILED

MAY 0 2 2008

OFFICE OF PETITIONS

In re Application of :
BRADY, Floyd W. :
Application No. 29/241,618 : DECISION ON PETITION
Filed: October 27, 2005 :
Attorney Docket No. **011345-007600US** :

This is a decision on the renewed petition under the unintentional provisions of 37 CFR 1.137(b), filed March 13, 2007, to revive the above-identified application.

The petition is **GRANTED**.

This application became abandoned for failure to timely pay the issue fee on or before December 20, 2006, as required by the Notice of Allowance and Fee(s) Due mailed, September 20, 2006. Accordingly, the date of abandonment of this application is December 21, 2006.

The petition satisfies the requirements of 37 CFR 1.137(b) in that petitioner has supplied (1) the reply in the form of payment of the issue fee of $400; (2) the petition fee of $750, (3) a proper statement of unintentional delay and (4) a terminal disclaimer and fee as required by 37 CFR 1.137(b).

The terminal disclaimer filed March 13, 2007 has been entered and made of record. Any continuing application filed from this application must contain a copy of the terminal disclaimer. The copy of the terminal disclaimer must be filed with a cover letter requesting the terminal disclaimer be recorded on the continuing application. A copy of this decision should be attached to the cover letter.

Telephone inquiries concerning this decision should be directed to Monica A. Graves at (571) 272-7253.

This application is being referred to the Office of Data Management for processing into a patent.

Sherry D. Brinkley
Petitions Examiner
Office of Petitions

UNITED STATES PATENT AND TRADEMARK OFFICE

Commissioner for Patents
United States Patent and Trademark Office
P.O. Box 1450
Alexandria, VA 22313-1450
www.uspto.gov

YU CHI CHEN
P O BOX 44-2049
TAIPEI 10668 TAIWAN

COPY MAILED

MAY 09 2007

OFFICE OF PETITIONS

In re Application of :
Yu Chi Chen :
Application No. 29/241,658 : DECISION ON PETITION
Filed: October 31, 2005 :
Attorney Docket No. TB05P0125US :

This is a decision on the petition under 37 CFR 1.137(b), filed March 26, 2007, to revive the above-identified application. For the reason stated below, the petition is being treated as a petition under 37 CFR 1.181 requesting withdrawal of the holding of abandonment.

The petition is **GRANTED**.

This application was held abandoned for failure to timely pay the issue fee on or before November 13, 2006, as required by the Notice of Allowance and Fee(s) Due, mailed August 10, 2006. A Notice of Abandonment was mailed on February 23, 2007.

The record of this file indicates that a check for the issue fee was tendered on November 9, 2006; however, this check was returned to the USPTO. The Office of Finance has informed the Office of Petitions that the returned check was an error on the part of the bank for the USPTO. The November 9, 2006 issue fee payment has been applied towards payment of the issue fee. As the check for payment of the issue fee was timely received, this application held abandoned in error. In view thereof, the Notice of Abandonment mailed on February 23, 2007 is hereby **vacated** and the holding of abandonment is **withdrawn**. This application has been restored to pending status.

A petition under 37 CFR 1.181 to withdraw the holding of abandonment does not require payment of a fee. Therefore, the $750 petition fee, as well as the duplicate $400 issue fee payment, will be refunded in due course.

Telephone inquiries concerning this decision should be directed to the undersigned at (571) 272-3218.

This application is being referred to Publishing Division for appropriate processing in accordance with this decision on petition.

Frances Hicks
Petitions Examiner
Office of Petitions

UNITED STATES PATENT AND TRADEMARK OFFICE

Commissioner for Patents
United States Patent and Trademark Office
P.O. Box 1450
Alexandria, VA 22313-1450
www.uspto.gov

CHARLES R. CIENFUEGOS
2120 S. SANTA FE AVE C-2
VISALIA CA 93292

COPY MAILED
JUN 30 2006
OFFICE OF PETITIONS

In re Application of :
CHARLES R. CIENFUEGOS :
Application No. 29/241,664 : DECISION ON PETITION
Filed: February 16, 2006 : TO MAKE SPECIAL UNDER
Attorney Docket No. n/a : 37 CFR 1.102(c)(1)
:

This is a decision on the petition under 37 CFR 1.102(c)(1), filed May 30, 2006 and resubmitted on June 9, 2006, to make the above-identified application special based on applicant's age as set forth in M.P.E.P. § 708.02, Section IV.

The petition is **GRANTED**.

A grantable petition to make an application special under 37 CFR 1.102(c)(1) and MPEP § 708.02, Section IV: Applicant's Age, must be accompanied by evidence showing that at least one of the applicants is 65 years of age, or more, such as a birth certificate or a statement by applicant. No fee is required.

The instant petition includes a copy of the inventor's driver's license as evidence that Charles R. Cienfuegos is more than 65 years of age. Accordingly, the above-identified application has been accorded "special" status.

Telephone inquiries concerning this decision should be directed to Amelia Au at 571-272-7414.

All other inquiries concerning either the examination or status of the application should be directed to the Technology Center.

The application is being forwarded to the Technology Center Art Unit 2914 for action on the merits commensurate with this decision.

Amelia Au
Petitions Examiner
Office of Petitions

UNITED STATES PATENT AND TRADEMARK OFFICE

Commissioner for Patents
United States Patent and Trademark Office
P.O. Box 1450
Alexandria, VA 22313-1450
www.uspto.gov
DIW Dec-07

VECTOR PRODUCTS, INC.
ROBERT POWELL
P.O. BOX 34385
c/o VENABLE LLP
WASHINGTON DC 20043-9998

COPY MAILED

DEC 18 2007

OFFICE OF PETITIONS

In re Patent Number: D541244 :
Issue Date: 04/24/2007 :
Application Number: 29/241675 : ON PETITION
Filing Date: 11/01/2005 :
Attorney Docket Number: 32405-225266 :

This is a decision on the petition filed on August 10, 2007, under 37 CFR 3.81(b)[1] to correct the assignee on the front page of the above-identified patent by way of a Certificate of Correction.

The petition is **DISMISSED**.

Petitioner states that the correct assignee is "Vector Products, Inc., Plantation, FL" A review of Office PALM records indicates, however, that an assignment in the name of "Vector Products, Inc., **Ft. Lauderdale, FL**" (emphasis added) was recorded prior to issuance of the patent. 37 CFR 3.81(b) permits the patent to issue in the name of an assignee if the assignment was submitted for recordation before issuance of the patent. Patent and Trademark Office assignment records further disclose that a change of address listing the assignee as Vector Products, Inc., Plantation, FL was recorded on August 10, 2007, after the date of issuance of this patent.

Accordingly, issuance of a Certificate of Correction in the name of Vector Products, Inc., Plantation, FL, would not be proper, since the change in of the city of residence of the assignee was not recorded until after issuance of the patent.

Nevertheless, petitioners may request a Certificate of Correction listing the correct assignee name and residence as recorded at

[1] See Official Gazette of 22 June, 2004.

the time of issuance, with any renewed petition. No additional fee is due with such request.

Further correspondence with respect to this matter should be addressed as follows:

By mail: Mail Stop Petition
Commissioner for Patents
P.O. Box 1450
Alexandria, VA 22313-1450

By FAX: (571) 273-8300
Attn: Office of Petitions

By hand: Customer Service Window
Mail Stop Petition
Randolph Building
401 Dulany Street
Alexandria, VA 22314

Telephone inquires concerning this matter may be directed to the undersigned at 571.272.3231.

D Wood

Douglas I. Wood
Senior Petitions Attorney
Office of Petitions

UNITED STATES PATENT AND TRADEMARK OFFICE

Commissioner for Patents
United States Patent and Trademark Office
P.O. Box 1450
Alexandria, VA 22313-1450
www.uspto.gov

THOMAS MOGA
BUTZEL LONG
STONERIDGE WEST
41000 WOODWARD AVENUE
BLOOMFIELD HILLS MI 48304

COPY MAILED

MAY 23 2007

OFFICE OF PETITIONS

In re Application of :
Devin Benner :
Application No. 29/241,730 : ON PETITION
Filed: October 31, 2005 :
Attorney Docket No. 120825-0003
:

This is a decision on the petition to revive under 37 CFR 1.137(a), filed April 9, 2007.

The petition under 37 CFR 1.137(a) is **GRANTED**.

The above-identified application became abandoned for failure to timely submit correct drawings in response to the Notice of Allowability mailed September 14, 2006. This Notice set a shortened statutory period for reply of three (3) months. No drawings having been received, the application became abandoned on December 15, 2006. A Notice of Abandonment was mailed on February 13, 2007.

A grantable petition under 37 CFR 1.137(a) must be accompanied by: (1) the required reply, unless previously filed; (2) the petition fee as set forth in 37 CFR 1.17(l); (3) a showing to the satisfaction of the Commissioner that the entire delay in filing the required reply from the due date for the reply until the filing of a grantable petition pursuant to 37 CFR 1.137(a) was unavoidable; and (4) any terminal disclaimer (and fee as set forth in 37 CFR 1.20(d)) required pursuant to 37 CFR 1.137(d). Decisions on reviving abandoned applications on the basis of "unavoidable" delay have adopted the reasonably prudent person standard in determining if the delay was unavoidable:

> The word 'unavoidable' . . . is applicable to ordinary human affairs, and requires no more or greater care or diligence

> than is generally used and observed by prudent and careful men in relation to their most important business. It permits them in the exercise of this care to rely upon the ordinary and trustworthy agencies of mail and telegraph, worthy and reliable employees, and such other means and instrumentalities as are usually employed in such important business. If unexpectedly, or through the unforeseen fault or imperfection of these agencies and instrumentalities, there occurs a failure, it may properly be said to be unavoidable, all other conditions of promptness in its rectification being present.[1]

Moreover, a petition cannot be granted where a petitioner has failed to meet his or her burden of establishing that the delay was "unavoidable."[2]

Petitioner argues that he timely filed corrected drawings in response to the Notice of Allowability. In support thereof, petitioner has included a USPTO date stamped postcard receipt, dated December 14, 2006, identifying the instant application, and itemizing 2 pages of corrected drawings.

A postcard receipt which itemizes and properly identifies the items which are being filed serves as *prima facie* evidence of receipt in the Office of all items listed thereon on the date stamped thereon by the Office. See MPEP 503.

In view of the above, it is concluded that petitioner has met his burden of establishing that the delay was unavoidable.

The application is being forwarded to Group Art Unit 2916 for consideration of the corrected drawings filed December 14, 2006 (copy re-supplied with the instant petition).

Telephone inquiries concerning this decision should be directed to the undersigned at (571)272-3207.

Cliff Congo
Petitions Attorney
Office of Petitions

---

[1] In re Mattullath, 38 App. D.C. 497, 514-15 (1912)(quoting Ex parte Pratt, 1887 Dec. Comm'r Pat. 31, 32-33 (1887)); see also Winkler v. Ladd, 221 F. Supp. 550, 552, 138 USPQ 666, 167-68 (D.D.C. 1963), aff'd, 143 USPQ 172 (D.C. Cir. 1963); Ex parte Henrich, 1913 Dec. Comm'r Pat. 139, 141 (1913).

[2] Haines v. Quigg, 673 F. Supp. 314, 316-17, 5 USPQ2d 1130, 1131-32 (N.D. Ind. 1987).

UNITED STATES PATENT AND TRADEMARK OFFICE

Commissioner for Patents
United States Patent and Trademark Office
P.O. Box 1450
Alexandria, VA 22313-1450
www.uspto.gov

CALFEE HALTER & GRISWOLD, LLP
800 SUPERIOR AVENUE
SUITE 1400
CLEVELAND OH 44114

COPY MAILED

MAR 1 8 2008

OFFICE OF PETITIONS

In re Patent No. D536,597 :
Application No. 29/241,732 :
Filed: October 31, 2005 : ON PETITION
Issued: February 13, 2007 :
Attorney Docket No. 27475.08509 :

This is a decision on the petition filed December 3, 2007, which is being treated as a request under 37 CFR 3.81(b)[1] to correct the name of the assignee on the front page of the above-identified patent by way of a Certificate of Correction.

The request is **GRANTED**.

The $130.00 processing fee will be charged to petitioner's deposit account as authorized.

The matter is being referred to the Certificates of Correction Branch for issuance of the requested Certificate of Correction.

Telephone inquiries concerning this decision may be directed to the undersigned at (571) 272-3206. Inquiries regarding the issuance of a certificate of correction should be directed to the Certificate of Correction Branch at (571) 272-4200.

Liana Walsh
Petitions Examiner
Office of Petitions

[1] *See* MPEP 1309, subsection II; and Official Gazette of June 22, 2004.

UNITED STATES PATENT AND TRADEMARK OFFICE

Commissioner for Patents
United States Patent and Trademark Office
P.O. Box 1450
Alexandria, VA 22313-1450
www.uspto.gov

MCGLEW & TUTTLE, PC
P.O. BOX 9227
SCARBOROUGH STATION
SCARBOROUGH NY 10510-9227

COPY MAILED

MAR 18 2008

OFFICE OF PETITIONS

ON PETITION

In re Application of
Karl-Friedrich Scheufele
Application No. 29/241,774
Filed: November 1, 2005
Attorney Docket No: **72022**

This is a decision on the petition filed January 23, 2008 under 37 CFR 1.137(b),[1] to revive the above-identified application.

The petition under 37 CFR 1.137 (b) is **DISMISSED**.

Any further petition to revive the above-identified application must be submitted within TWO (2) MONTHS from the mail date of this decision. Extensions of time under 37 CFR 1.136(b) are permitted. The reconsideration request should include a cover letter entitled "Petition under 37 CFR 1.137." This is **not** final agency action within the meaning of 5 U.S.C. § 704.

This application became abandoned November 29, 2007 for failure to file corrected drawings in response to the Notice of Allowability mailed on August 28, 2007. Accordingly, the Notice of Abandonment was mailed on January 8, 2008.

While the issue fee was previously submitted and while the corrected drawings have

---

[1] Effective December 1, 1997, the provisions of 37 CFR 1.137(b) now provide that where the delay in reply was unintentional, a petition may be filed to revive an abandoned application or a lapsed patent pursuant to 37 CFR 1.137(b). A grantable petition filed under the provisions of 37 CFR 1.137(b) must be accompanied by:

(1) the required reply, unless previously filed. In a nonprovisional application abandoned for failure to prosecute, the required reply may be met by the filing of a continuing application. In a nonprovisional application filed on or after June 8, 1995, and abandoned for failure to prosecute, the required reply may also be met by the filing of a request for continued examination in compliance with § 1.114. In an application or patent, abandoned or lapsed for failure to pay the issue fee or any portion thereof, the required reply must be the payment of the issue fee or any outstanding balance thereof.

(2) the petition fee as set forth in 37 CFR 1.17(m);

(3) a statement that the entire delay in filing the required reply from the due date for the reply until the filing of a grantable petition pursuant to 37 CFR 1.137(b) was unintentional. The Commissioner may required additional information where there is a question whether the delay was unintentional; and

(4) any terminal disclaimer (and fee as set forth in 37 CFR 1.20(d)) required pursuant to 37 CFR 1.137(c)).

been submitted with the instant petition, the petition does not satisfy requirement (4) of the regulation.

Petitioner must submit a Terminal Disclaimer with any renewed petition since this is a design application. **Petitioner should note that submission of any renewed petition without the required reply will be construed as intentional delay.**

Further correspondence with respect to this matter should be addressed as follows:

By mail: Mail Stop Petitions
Commissioner for Patents
P.O. Box 1450
Alexandria VA 22313-1450

By FAX: (571) 273-8300
ATTN: Office of Petitions

Telephone inquiries concerning this matter may be directed to the undersigned Petitions Attorney at (571) 272-3212.

Patricia Faison-Ball

Patricia Faison-Ball
Senior Petitions Attorney
Office of Petitions

UNITED STATES PATENT AND TRADEMARK OFFICE

Commissioner for Patents
United States Patent and Trademark Office
P.O. Box 1450
Alexandria, VA 22313-1450
www.uspto.gov

MCGLEW & TUTTLE, PC
P.O. BOX 9227
SCARBOROUGH STATION
SCARBOROUGH NY 10510-9227

COPY MAILED

APR 0 7 2008

OFFICE OF PETITIONS

In re Application of :
Karl-Friedrich Scheufele :
Application No. 29/241,774 : ON PETITION
Filed: November 1, 2005 :
Attorney Docket No: **72022** :

This is a decision on the renewed petition filed March 25, 2008 under 37 CFR 1.137(b),[1] to revive the above-identified application.

The petition under 37 CFR 1.137 (b) is **GRANTED**.

Although the issue fee had been timely paid, this application became abandoned November 29, 2007 for failure to file corrected drawings in response to the Notice of Allowability mailed on August 28, 2007. Accordingly, the Notice of Abandonment was mailed on January 8, 2008. A petition to revive filed January 23, 2008 was dismissed in a decision mailed March 18, 2008 because the petition was not accompanied by a terminal disclaimer.

All other requirements of 37 CFR 1.137(b), including the filing of a terminal disclaimer, and fee, having now been met, this matter is being referred to the Publishing Division.

Telephone inquiries concerning this matter may be directed to the undersigned Petitions Attorney at (571) 272-3212.

Patricia Faison-Ball
Senior Petitions Attorney
Office of Petitions

---

[1] Effective December 1, 1997, the provisions of 37 CFR 1.137(b) now provide that where the delay in reply was unintentional, a petition may be filed to revive an abandoned application or a lapsed patent pursuant to 37 CFR 1.137(b). A grantable petition filed under the provisions of 37 CFR 1.137(b) must be accompanied by:

(1) the required reply, unless previously filed. In a nonprovisional application abandoned for failure to prosecute, the required reply may be met by the filing of a continuing application. In a nonprovisional application filed on or after June 8, 1995, and abandoned for failure to prosecute, the required reply may also be met by the filing of a request for continued examination in compliance with § 1.114. In an application or patent, abandoned or lapsed for failure to pay the issue fee or any portion thereof, the required reply must be the payment of the issue fee or any outstanding balance thereof.

(2) the petition fee as set forth in 37 CFR 1.17(m);

(3) a statement that the entire delay in filing the required reply from the due date for the reply until the filing of a grantable petition pursuant to 37 CFR 1.137(b) was unintentional. The Commissioner may required additional information where there is a question whether the delay was unintentional; and

(4) any terminal disclaimer (and fee as set forth in 37 CFR 1.20(d)) required pursuant to 37 CFR 1.137(c)).

UNITED STATES PATENT AND TRADEMARK OFFICE

Commissioner for Patents
United States Patent and Trademark Office
P.O. Box 1450
Alexandria, VA 22313-1450
www.uspto.gov

KING & SCHICKLI, PLLC
247 NORTH BROADWAY
LEXINGTON, KY 40507

COPY MAILED

DEC 2 0 2005

OFFICE OF PETITIONS

In re Application of :
Leigh Jowett :
Application No. 29/241,800 : DECISION GRANTING PETITION
Filed: November 1, 2005 :
Att'y Docket No. 039-206 D :

This is a decision on the petition filed November 23, 2005, under 37 CFR 1.53, in response to the Notice of Incomplete Nonprovisional Application mailed November 15, 2005, requesting that the above identified application be accorded a filing date of November 1, 2005.

After the filing of the application, the Office of Initial Patent Examination mailed a "Notice of Incomplete Nonprovisional Application", amongst other things, stating that the application had not been accorded a filing date because the application was deposited without a complete specification including at least one claim.

In response, the present petition, and a complete copy of the one page specification which includes one claim, was filed. Petitioners argue that the specification, including claims, was filed with the other application papers on November 1, 2005. In support of the petition, a copy of petitioner's postcard receipt which shows an official USPTO date-stamp of November 1, 2005, and the above-identified application number, and acknowledges receipt of, *inter alia,* a one page application.

Upon review of the file and the materials submitted with the petition, the evidence reveals that the reference to "the application" on the postcard, was in fact the one page specification which included one claim. Therefore, the application, including a complete specification including claims, was complete on filing and entitled to a filing date of November 1, 2005.

In view of the above, the petition is **GRANTED**.

The Notice of Incomplete Nonprovisional Application mailed November 15, 2005, is withdrawn. Therefore, the petition fee in the amount of $400.00 will be credited back to deposit account no. 11-0978

The application is being returned to the Office of Initial Patent Examination for reprocessing with a filing date of November 1, 2005, using the application papers filed on November 1, 2005 and the papers supplied on November 23, 2005 which included the one page specification and one claim.

Telephone inquiries related to this decision should be directed to the undersigned Petitions Attorney at (571) 272-3212.

Patricia Faison-Ball
Senior Petitions Attorney
Office of Petitions

SCANI **Please forward case and paper to address shown below.**

SPE RESPONSE FOR CERTIFICATE OF CORRECTION

Paper No.: _____

DATE : 12/10/07

TO SPE OF : ART UNIT 2913 Veynar Caron (SPE)

SUBJECT : Request for Certificate of Correction for Appl. No.: 29/241501 Patent No.: D541203

Please respond to this request for a certificate of correction within 7 days.

Please review the requested changes/corrections as shown in the attached certificate of correction. Please complete this form (see below) and forward it with the file to:

Certificates of Correction Branch (CofC)
South Tower - 9A22
Palm Location 7580

HENRY RANDALL
Certificates of Correction Branch
703-308-9390 ext. _____

Thank You For Your Assistance

The request for issuing the above-identified correction(s) is hereby:

Note your decision on the appropriate box.

☑ Approved	All changes apply.
☐ Approved in Part	Specify below which changes do not apply.
☐ Denied	State the reasons for denial below.

Comments: The replacement drawings figs 1-3 are approved

Stacia Cadmus

STACIA CADMUS
PRIMARY EXAMINER

Caron D. Veynar 2913

SPE Art Unit

UNITED STATES PATENT AND TRADEMARK OFFICE

Commissioner for Patents
United States Patent and Trademark Office
P.O. Box 1450
Alexandria, VA 22313-1450
www.uspto.gov

PATENTTM.US
P. O. BOX 82788
PORTLAND OR 97282-0788

COPY MAILED

JUN 15 2009

OFFICE OF PETITIONS

In re Application of :
Yao : DECISION ON PETITION
Application No. 29/241,827 :
Filed: November 2, 2005 :
Atty. Dkt. No: T-1759 :

This decision is in response to the petition to withdraw the holding of abandonment under 37 CFR 1.181 filed January 21, 2009.

The application was held abandoned for failure to timely submit a proper reply to the Notice of Allowance and Issue Fee Due (Notice) mailed September 8, 2006. The Notice set a three month statutory period of time for reply. Notice of Abandonment was mailed January 24, 2007.

Petitioner asserts non-receipt of the Notice. Applicant's former attorney of record indicates that a search of the file jacket and office docket records indicate that the Notice was not received. Applicant's former attorney has provided a copy of a docket record has set forth the docketing procedures in place.

The showing required to establish non-receipt of an Office communication must include a statement from the practitioner describing the system used for recording an Office action received at the correspondence address of record with the USPTO. The statement should establish that the docketing system is sufficiently reliable. It is expected that the record would include, but not be limited to, the application number, attorney docket number, the mail date of the Office action and the due date for the response. Practitioner must state that the Office action was not received at the correspondence address of record, and that a search of the practitioner's record(s), including any file jacket or the equivalent, and the application contents, indicates that the Office action was not received. A copy of the record(s) used by the practitioner where the non-received Office action would have been entered had it been received is required. A copy of the practitioner's record(s) required to show non-receipt of the Office action should include the master docket for the firm. That is, if a three month period for reply was set

in the non-received Office action, a copy of the master docket report showing all replies docketed for a date three months from the mail date of the non-received Office action must be submitted as documentary proof of non-receipt of the Office action. If no such master docket exists, the practitioner should so state and provide other evidence such as, but not limited to, the following: the application file jacket; incoming mail log; calendar; reminder system; or the individual docket record for the application in question.

The instant petition and accompanying documentary evidence have been carefully reviewed and found in compliance with the procedures set forth at MPEP 711.03(c), the handwritten docket record having been construed as the required "Master Docket."

In view thereof, the holding of abandonment is withdrawn and the Notice of Abandonment is vacated.

Further, the petition to withdraw the holding of abandonment is hereby **GRANTED**.

This application is being forwarded to Group Art Unit 2911 for re-mailing of the Notice. The time period for reply to the Office communication will be set forth therein.

Telephone inquiries concerning this matter may be directed to the undersigned at (571) 272-3205.

/ALESIA M. BROWN/

Alesia M. Brown
Petitions Attorney
Office of Petitions

RECEIVED
CENTRAL FAX CENTER

AUG 17 2006

96964-00909

IN THE UNITED STATES PATENT AND TRADEMARK OFFICE

In re patent application of
John Griffin, et al.

Serial No.: 29/241,867

Confirmation No.: 5995

Filed: October 31, 2005

For: Pump Housing

Examiner: Ralf T. Seifert

Group Art Unit: 2914

I hereby certify that this correspondence and/or fee is being transmitted by fax to the United States Patent & Trademark Office to the central fax number 571-273-8300 on 8/17/06
(Date of Transmission)

Stephanie B. de Moraes 8/17/06
(Signature) (Date)

SPECIAL PROCEDURES SUBMISSION
Commissioner for Patents
P.O. Box 1450
Alexandria, VA 22313-1450

8-22-06
Approved
Jacqueline M. Stone
Jacqueline M. Stone, Director
Technology Center 1700/2900

SUPPLEMENT TO REQUEST FOR EXPEDITED EXAMINATION OF A DESIGN PATENT APPLICATION (37 CFR 1.155)

Sir:

In accordance with the provisions of 37 C.F.R. §1.155 and MPEP §1504.30, Applicants and their attorney are submitting a Request for Expedited Examination of the above-referenced design patent application as provided in attached Form PTO/SB/27. Because the Request is being submitted subsequent to the filing of the application, it is being faxed to the U.S. Patent & Trademark Office's centralized fax number (which is currently 571-273-8300) with the notation "Special Procedures Submission" in accordance with MPEP §1504.30.

Formal drawings in accordance with 37 CFR §1.84 were submitted with the filing of the application. An Information Disclosure Statement and a Supplemental Information Disclosure Statement in compliance with 37 CFR §1.98 were filed on February 1, 2006 and August 16, 2006, respectively.

08/18/2006 JBALINAN 00000030 503571 29241867
01 FC:1802 900.00 DA

A $900.00 fee is due in connection with the filing of this Request. However, there is no designated space on Request Form PTO/SB/27 for fee payment instructions. Therefore, by way of this Supplement, and upon the advice of an inventor assistance representative at the U.S. Patent & Trademark Office, the Commissioner is hereby authorized to charge the $900.00 fee to Deposit Account No. 50-3571. If any further fees are due, including, without limitation, any further extension or petition fees, the Examiner is hereby authorized to charge them to Deposit Account No. 50-3571.

Respectfully Submitted,

McCARTER & ENGLISH, LLP

By: Joseph Agostino
Reg. No. 51,191

McCARTER & ENGLISH, LLP
Four Gateway Center
100 Mulberry Street
Newark, NJ 07102-4056
(973) 622-4444

PAGE 3/4 * RCVD AT 8/17/2006 2:01:41 PM [Eastern Daylight Time] * SVR:USPTO-EFXRF-6/33 * DNIS:2738300 * CSID:973 624 7070 * DURATION (mm-ss):01-18

SPECIAL PROCEDURES SUBMISSION

AUG 17 2006

Doc Code:

PTO/SB/27 (09-04)
Approved for use through 07/31/2006. OMB 0651-0031
U.S. Patent and Trademark Office; U.S. DEPARTMENT OF COMMERCE

Under the Paperwork Reduction Act of 1995, no persons are required to respond to a collection of information unless it displays a valid OMB control number.

REQUEST FOR EXPEDITED EXAMINATION OF A DESIGN APPLICATION (37 CFR 1.155)

Application Number	29/241,867
Filing Date	October 31, 2005
First Named Inventor	GRIFFIN, John
Title	PUMP HOUSING
Atty Docket Number	96964/00909

ADDRESS TO:

MAIL STOP EXPEDITED DESIGN
COMMISSIONER FOR PATENTS
P.O. Box 1450
Alexandria, VA 22313-1450

This is a request for expedited examination of a design application under 37 CFR 1.155.

NOTE: If the Request made by this form accompanies original application papers, include form PTO/SB/18 "Design Patent Application Transmittal" or its equivalent.

A preexamination search was conducted. The field of search was:

Class D15/7, 8, 9, 9.1 and 9.2; Class D23/209; Class 4/490, 507 and 509; Class 15/1.7; Class 210/169, 416.1, 416.2, 455, 483, 485 and 499; and Class 417/313, 321, 410.3, 413.1, 423.1, 423.3 and 423.14

Related applications:

If not previously filed for the above-identified application, the following items required by 37 CFR 1.155 are enclosed:

Formal drawings (see 37 CFR 1.84).
The fee set forth in 37 CFR 1.17(k).
An information disclosure statement in compliance with 37 CFR 1.98.

Signature — 8/17/06 Date

Joseph Agostino — Typed or printed name

51,191 — Registration Number, if applicable

973-848-5367 — Telephone Number

WARNING: Information on this form may become public. Credit card information should not be included on this form. Provide credit card information and authorization on PTO-2038.

This collection of information is required by 37 CFR 1.155. The information is required to obtain or retain a benefit by the public which is to file (and by the USPTO to process) an application. Confidentiality is governed by 35 U.S.C. 122 and 37 CFR 1.11 and 1.14. This collection is estimated to take 6 minutes to complete, including gathering, preparing, and submitting the completed application form to the USPTO. Time will vary depending upon the individual case. Any comments on the amount of time you require to complete this form and/or suggestions for reducing this burden, should be sent to the Chief Information Officer, U.S. Patent and Trademark Office, U.S. Department of Commerce, P.O. Box 1450, Alexandria, VA 22313-1450. DO NOT SEND FEES OR COMPLETED FORMS TO THIS ADDRESS. SEND TO: Commissioner for Patents, P.O. Box 1450, Alexandria, VA 22313-1450.

If you need assistance in completing the form, call 1-800-PTO-9199 and select option 2.

PTO/SB/27 (09-04)
Approved for use through 07/31/2006. OMB 0651-0031
U.S. Patent and Trademark Office; U.S DEPARTMENT OF COMMERCE
Under the Paperwork Reduction ACT of 1995, no persons are required to respond to collection of information unless it displays a valid OMB control number.

REQUEST FOR EXPEDITED EXAMINATION OF A DESIGN APPLICATION (37 CFR 1.155)

Application Number	Unknown
Filing Date	Herewith
First Named Inventor	Jason Blain
Title	INTERBODY FUSION DEVICE
Atty Docket Number	QORTHO.025DA

11300b U.S.PTO
29/242012
110405

ADDRESS TO:
MAIL STOP EXPEDITED DESIGN
COMMISSIONER FOR PATENTS
P.O. Box 1450
Alexandria, VA 22313-1450

This is a request for expedited examination of a design application under 37 CFR 1.155.

NOTE: If the Request made by this form accompanies original application papers, include form PTO/SB/18 "Design Patent Application Transmittal" or its equivalent.

A preexamination search was conducted. The field of search was:

Class D24, subclass 155; Class 606, subclasses 61, 72; Class 623, subclasses 17.11, 17.16. A computer search was also conducted, without regard to Class/ subclass, using the Patent Office "EAST" databases (USPAT, EPO, JPO and U.S. Printed Patent Applications) using a number of key word sets were developed.

Related applications: INTERBODY FUSION DEVICE filed on 11/04/05 (QORTHO.026DA)

If not previously filed for the above-identified application, the following items required by 37 CFR 1.155 are enclosed:

- Formal drawings (see 37 CFR 1.84).
- The fee set forth in 37 CFR 1.17(k).
- An information disclosure statement in compliance with 37 CFR 1.98.

11-21-05
Approved
Jacqueline M. Stone
Jacqueline M. Stone, Director
Technology Center 1700

Signature — Date: 11/4/05

Walter S. Wu — Typed or printed name

50,816 — Registration Number, if applicable

(949) 760-0404 — Telephone Number

WARNING: Information on this form may become public. Credit card information should not be included on this form. Provide credit card information and authorization on PTO-2038.

This collection of information is required by 37 CFR 1.155. The information is required to obtain or retain a benefit by the public which is to file (and by the USPTO to process) an application. Confidentiality is governed by 35 U.S.C. 122 and 37 CFR 1.11 and 1.14. This collection is estimated to take 6 minutes to complete, including gathering, preparing, and submitting the completed application form to the USPTO. Time will vary depending upon the individual case. Any comments on the amount of time you require to complete this form and/or suggestions for reducing this burden, should be sent to the Chief Information Officer, U.S. Patent and Trademark Office, U.S. Department of Commerce, P.O. Box 1450, Alexandria, VA 22313-1450. DO NOT SEND FEES OR COMPLETED FORMS TO THIS ADDRESS. SEND TO: Commissioner for Patents, P.O. Box 1450, Alexandria, VA 22313-1450.

If you need assistance in completing the form, call 1-800-PTO-9199 and select option 2.

11/07/2005 SSITHIB1 00000109 29242012
01 FC:1802
900.00 OP

PTO/SB/27 (09-04)
Approved for use through 07/31/2006. OMB 0651-0031
U.S. Patent and Trademark Office; U.S DEPARTMENT OF COMMERCE
Under the Paperwork Reduction ACT of 1995, no persons are required to respond to collection of information unless it displays a valid OMB control number.

113000 U.S.PTO
29/242013
110405

REQUEST FOR EXPEDITED EXAMINATION OF A DESIGN APPLICATION (37 CFR 1.155)

Application Number	TBA
Filing Date	Herewith
First Named Inventor	Handley
Title	HANDBAG
Atty Docket Number	25695-003(A3)

ADDRESS TO:
MAIL STOP EXPEDITED DESIGN
COMMISSIONER FOR PATENTS
P.O. Box 1450
Alexandria, VA 22313-1450

This is a request for expedited examination of a design application under 37 CFR 1.155.

NOTE: If the Request made by this form accompanies original application papers, include form PTO/SB/18 "Design Patent Application Transmittal" or its equivalent.

A preexamination search was conducted. The field of search was:

U.S. & foreign patent art in the following classes and sub-classes: D3/243, 242, 232, 262

150/107, 118

Related applications:

If not previously filed for the above-identified application, the following items required by 37 CFR 1.155 are enclosed:

- Formal drawings (see 37 CFR 1.84).
- The fee set forth in 37 CFR 1.17(k).
- An information disclosure statement in compliance with 37 CFR 1.98.

11-21-05
Approved
Jacqueline M. Stone
Jacqueline M. Stone, Director
Technology Center 1700

Signature

November 4, 2005
Date

Mark Montague
Typed or printed name

36,612
Registration Number, if applicable

212-790-9200
Telephone Number

WARNING: Information on this form may become public. Credit card information should not be included on this form. Provide credit card information and authorization on PTO-2038.

This collection of information is required by 37 CFR 1.155. The information is required to obtain or retain a benefit by the public which is to file (and by the USPTO to process) an application. Confidentiality is governed by 35 U.S.C. 122 and 37 CFR 1.11 and 1.14. This collection is estimated to take 6 minutes to complete, including gathering, preparing, and submitting the completed application form to the USPTO. Time will vary depending upon the individual case. Any comments on the amount of time you require to complete this form and/or suggestions for reducing this burden, should be sent to the Chief Information Officer, U.S. Patent and Trademark Office, U.S. Department of Commerce, P.O. Box 1450, Alexandria, VA 22313-1450. DO NOT SEND FEES OR COMPLETED FORMS TO THIS ADDRESS. SEND TO: Commissioner for Patents, P.O. Box 1450, Alexandria, VA 22313-1450.

If you need assistance in completing the form, call 1-800-PTO-9199 and select option 2.

PTO/SB/27 (09-04)
Approved for use through 07/31/2006. OMB 0651-0031
U.S. Patent and Trademark Office; U.S DEPARTMENT OF COMMERCE
Under the Paperwork Reduction ACT of 1995, no persons are required to respond to collection of information unless it displays a valid OMB control number.

REQUEST FOR EXPEDITED EXAMINATION OF A DESIGN APPLICATION (37 CFR 1.155)

Application Number	TBA
Filing Date	Herewith
First Named Inventor	Handley
Title	DIAPER BAG
Atty Docket Number	25695-003(A1)

113000 U.S.PTO
29/242014
110405

ADDRESS TO:
MAIL STOP EXPEDITED DESIGN
COMMISSIONER FOR PATENTS
P.O. Box 1450
Alexandria, VA 22313-1450

This is a request for expedited examination of a design application under 37 CFR 1.155.

NOTE: If the Request made by this form accompanies original application papers, include form PTO/SB/18 "Design Patent Application Transmittal" or its equivalent.

A preexamination search was conducted. The field of search was:

U.S. & foreign patent art in the following classes and sub-classes: 383/4, 16, 38, 111, , 1990/1, 2, 9901, 150/104, 106, 113

Related applications: none

If not previously filed for the above-identified application, the following items required by 37 CFR 1.155 are enclosed:

- Formal drawings (see 37 CFR 1.84).
- The fee set forth in 37 CFR 1.17(k).
- An information disclosure statement in compliance with 37 CFR 1.98.

11-21-05
Approved
Jacqueline M. Stone
Jacqueline M. Stone, Director
Technology Center 1700

Mark Montague
Signature

November 4, 2005
Date

Mark Montague
Typed or printed name

36,612
Registration Number, if applicable

212-790-9200
Telephone Number

WARNING: Information on this form may become public. Credit card information should not be included on this form. Provide credit card information and authorization on PTO-2038.

This collection of information is required by 37 CFR 1.155. The information is required to obtain or retain a benefit by the public which is to file (and by the USPTO to process) an application. Confidentiality is governed by 35 U.S.C. 122 and 37 CFR 1.11 and 1.14. This collection is estimated to take 6 minutes to complete, including gathering, preparing, and submitting the completed application form to the USPTO. Time will vary depending upon the individual case. Any comments on the amount of time you require to complete this form and/or suggestions for reducing this burden, should be sent to the Chief Information Officer, U.S. Patent and Trademark Office, U.S. Department of Commerce, P.O. Box 1450, Alexandria, VA 22313-1450. DO NOT SEND FEES OR COMPLETED FORMS TO THIS ADDRESS. SEND TO: Commissioner for Patents, P.O. Box 1450, Alexandria, VA 22313-1450.

If you need assistance in completing the form, call 1-800-PTO-9199 and select option 2.

PTO/SB/27 (09-04)
Approved for use through 07/31/2006. OMB 0651-0031
U.S. Patent and Trademark Office; U.S DEPARTMENT OF COMMERCE
Under the Paperwork Reduction ACT of 1995, no persons are required to respond to collection of information unless it displays a valid OMB control number.

REQUEST FOR EXPEDITED EXAMINATION OF A DESIGN APPLICATION (37 CFR 1.155)

Application Number	TBA
Filing Date	Herewith
First Named Inventor	Handley
Title	HANDBAG
Atty Docket Number	25695-003(A4)

113000 U.S.PTO
29/242015
10405

ADDRESS TO:
MAIL STOP EXPEDITED DESIGN
COMMISSIONER FOR PATENTS
P.O. Box 1450
Alexandria, VA 22313-1450

This is a request for expedited examination of a design application under 37 CFR 1.155.

NOTE: If the Request made by this form accompanies original application papers, include form PTO/SB/18 "Design Patent Application Transmittal" or its equivalent.

A preexamination search was conducted. The field of search was:

U.S. & foreign patent art in the following classes and sub-classes: D3/232, 234, 239, 240, 241, 246; 150/123, 124, 20, 121, 122

Related applications: _____

If not previously filed for the above-identified application, the following items required by 37 CFR 1.155 are enclosed:

- Formal drawings (see 37 CFR 1.84).
- The fee set forth in 37 CFR 1.17(k).
- An information disclosure statement in compliance with 37 CFR 1.98.

11-21-05
Approved
Jacqueline M. Stone
Jacqueline M. Stone, Director
Technology Center 1700

Signature

November 4, 2005
Date

Mark Montague
Typed or printed name

36,612
Registration Number, if applicable

212-790-9200
Telephone Number

WARNING: Information on this form may become public. Credit card information should not be included on this form. Provide credit card information and authorization on PTO-2038.

This collection of information is required by 37 CFR 1.155. The information is required to obtain or retain a benefit by the public which is to file (and by the USPTO to process) an application. Confidentiality is governed by 35 U.S.C. 122 and 37 CFR 1.11 and 1.14. This collection is estimated to take 6 minutes to complete, including gathering, preparing, and submitting the completed application form to the USPTO. Time will vary depending upon the individual case. Any comments on the amount of time you require to complete this form and/or suggestions for reducing this burden, should be sent to the Chief Information Officer, U.S. Patent and Trademark Office, U.S. Department of Commerce, P.O. Box 1450, Alexandria, VA 22313-1450. DO NOT SEND FEES OR COMPLETED FORMS TO THIS ADDRESS. SEND TO: Commissioner for Patents, P.O. Box 1450, Alexandria, VA 22313-1450.

If you need assistance in completing the form, call 1-800-PTO-9199 and select option 2.

SPE RESPONSE FOR CERTIFICATE OF CORRECTION

Paper No.: _____

DATE : 12-07

TO SPE OF : ART UNIT 2913

SUBJECT : Request for Certificate of Correction for Appl. No.: 29/242,019 Patent No.: D526,821

Please respond to this request for a certificate of correction within 7 days.

Please review the requested changes/corrections as shown in the **COCIN** document(s) in the IFW application image. No new matter should be introduced, nor should the scope or meaning of the claims be changed.

Please check Drawings

Please complete the response (see below) and forward the completed response to scanning using document code **COCX**.

Certificates of Correction Branch

703-308-9390 ext. 171

Thank You For Your Assistance

The request for issuing the above-identified correction(s) is hereby:

Note your decision on the appropriate box.

☒ Approved	All changes apply.
☐ Approved in Part	Specify below which changes do not apply.
☐ Denied	State the reasons for denial below.

Comments: _____

Caron D Veynar — SPE

2913 — Art Unit

CARON D. VEYNAR
SUPERVISORY PATENT EXAMINER

UNITED STATES PATENT AND TRADEMARK OFFICE

COMMISSIONER FOR PATENTS
UNITED STATES PATENT AND TRADEMARK OFFICE
P.O. BOX 1450
ALEXANDRIA, VA 22313-1450
www.uspto.gov

Stroock & Stroock & Lavan LLP
180 Maiden Lane
New York, NY 10038

COPY MAILED
MAR 09 2010

In re Taku Ishizawa et al. :
Application No.: 29/242,029 : **DECISION**
Filed: November 3, 2005 : **GRANTING**
Patent No.: D524,855 : **PETITION**
Issued: July 11, 2006 :

This is a decision on the November 3, 2006 petition requesting reprinting of D524,855 ("the November 3, 2006 petition").

The November 3, 2006 petition is before the Office of Patent Legal Administration (OPLA) for consideration.

The November 3, 2006 petition is **granted**.

The Image for U.S. Patent No. D524,855 in the USPTO Patent Full-Text and Image Database maintained by the Office will be updated to contain the original, incorrectly printed patent and the corrected patent in the form of a certificate of correction. In addition, the Office will provide a courtesy corrected reprint of U.S. Patent No. D524,855 for patent owner's records

Any inquiry concerning this decision should be directed to Raul Tamayo, Legal Advisor, at (571) 272-7728.

Brian E. Hanlon
Director
Office of Patent Legal Administration
Office of the Associate Commissioner
for Patent Examination Policy

1802

PTO/SB/27 (09-04)
Approved for use through 07/31/2006. OMB 0651-0031
U.S. Patent and Trademark Office; U.S DEPARTMENT OF COMMERCE
Under the Paperwork Reduction ACT of 1995, no persons are required to respond to collection of information unless it displays a valid OMB control number.

REQUEST FOR EXPEDITED EXAMINATION OF A DESIGN APPLICATION (37 CFR 1.155)

Application Number	TBA
Filing Date	Herewith
First Named Inventor	Handley
Title	HANDBAG
Atty Docket Number	25695-003(A5)

112949 U.S PTO
11/29/2005
10405

ADDRESS TO:
MAIL STOP EXPEDITED DESIGN
COMMISSIONER FOR PATENTS
P.O. Box 1450
Alexandria, VA 22313-1450

This is a request for expedited examination of a design application under 37 CFR 1.155.

NOTE: If the Request made by this form accompanies original application papers, include form PTO/SB/18 "Design Patent Application Transmittal" or its equivalent.

A preexamination search was conducted. The field of search was:

U.S. & foreign patent art in the following classes and sub-classes: D3/246, 243, 242, 326

150/100, 105, 108, 114, 118, 119

Related applications:

If not previously filed for the above-identified application, the following items required by 37 CFR 1.155 are enclosed:

- Formal drawings (see 37 CFR 1.84).
- The fee set forth in 37 CFR 1.17(k).
- An information disclosure statement in compliance with 37 CFR 1.98.

11-21-05
Approved
Jacqueline M. Stone
Jacqueline M. Stone, Director
Technology Center 1700

Signature

November 4, 2005
Date

Mark Montague
Typed or printed name

36,612
Registration Number, if applicable

212-790-9200
Telephone Number

WARNING: Information on this form may become public. Credit card information should not be included on this form. Provide credit card information and authorization on PTO-2038.

This collection of information is required by 37 CFR 1.155. The information is required to obtain or retain a benefit by the public which is to file (and by the USPTO to process) an application. Confidentiality is governed by 35 U.S.C. 122 and 37 CFR 1.11 and 1.14. This collection is estimated to take 6 minutes to complete, including gathering, preparing, and submitting the completed application form to the USPTO. Time will vary depending upon the individual case. Any comments on the amount of time you require to complete this form and/or suggestions for reducing this burden, should be sent to the Chief Information Officer, U.S. Patent and Trademark Office, U.S. Department of Commerce, P.O. Box 1450, Alexandria, VA 22313-1450. DO NOT SEND FEES OR COMPLETED FORMS TO THIS ADDRESS. SEND TO: Commissioner for Patents, P.O. Box 1450, Alexandria, VA 22313-1450.

If you need assistance in completing the form, call 1-800-PTO-9199 and select option 2.

11/08/2005 FHETEKI1 00000033 29242034
01 FC:1802 900.00 DP

110405

PTO/SB/27 (09-04)
Approved for use through 07/31/2006. OMB 0651-0031
U.S. Patent and Trademark Office: U.S DEPARTMENT OF COMMERCE
Under the Paperwork Reduction ACT of 1995, no persons are required to respond to collection of information unless it displays a valid OMB control number.

REQUEST FOR EXPEDITED EXAMINATION OF A DESIGN APPLICATION (37 CFR 1.155)

Application Number	Unknown
Filing Date	Herewith
First Named Inventor	Jason Blain
Title	INTERBODY FUSION DEVICE
Atty Docket Number	QORTHO.026DA

ADDRESS TO:
MAIL STOP EXPEDITED DESIGN
COMMISSIONER FOR PATENTS
P.O. Box 1450
Alexandria, VA 22313-1450

110405
111949 U.S.PTO
29/242035

This is a request for expedited examination of a design application under 37 CFR 1.155.

NOTE: If the Request made by this form accompanies original application papers, include form PTO/SB/18 "Design Patent Application Transmittal" or its equivalent.

A preexamination search was conducted. The field of search was:

Class D24, subclass 155; Class 606, subclasses 61, 72; Class 623, subclasses 17.11, .17.16. A computer search was also conducted, without regard to Class/ subclass, using the Patent Office "EAST" databases (USPAT, EPO, JPO and U.S. Printed Patent Applications) using a number of key word sets were developed.

Related applications: INTERBODY FUSION DEVICE filed on 11/04/05 (QORTHO.025DA)

If not previously filed for the above-identified application, the following items required by 37 CFR 1.155 are enclosed:

- Formal drawings (see 37 CFR 1.84).
- The fee set forth in 37 CFR 1.17(k).
- An information disclosure statement in compliance with 37 CFR 1.98.

11-21-05

Approved
Jacqueline M. Stone
Jacqueline M. Stone, Director
Technology Center 1700

11/08/2005 LMONDIM1 00000012 29242035
04 FC:1802 900.00 OP

Signature — Date: 11/4/05

Walter S. Wu — Typed or printed name

50,816 — Registration Number, if applicable

(949) 760-0404 — Telephone Number

WARNING: Information on this form may become public. Credit card information should not be included on this form. Provide credit card information and authorization on PTO-2038.

This collection of information is required by 37 CFR 1.155. The information is required to obtain or retain a benefit by the public which is to file (and by the USPTO to process) an application. Confidentiality is governed by 35 U.S.C. 122 and 37 CFR 1.11 and 1.14. This collection is estimated to take 6 minutes to complete, including gathering, preparing, and submitting the completed application form to the USPTO. Time will vary depending upon the individual case. Any comments on the amount of time you require to complete this form and/or suggestions for reducing this burden, should be sent to the Chief Information Officer, U.S. Patent and Trademark Office, U.S. Department of Commerce, P.O. Box 1450, Alexandria, VA 22313-1450. DO NOT SEND FEES OR COMPLETED FORMS TO THIS ADDRESS. SEND TO: Commissioner for Patents, P.O. Box 1450, Alexandria, VA 22313-1450.

If you need assistance in completing the form, call 1-800-PTO-9199 and select option 2.

UNITED STATES PATENT AND TRADEMARK OFFICE

Commissioner for Patents
United States Patent and Trademark Office
P.O. Box 1450
Alexandria, VA 22313-1450
www.uspto.gov

CANTOR COLBURN, LLP
20 Church Street
22nd Floor
Hartford CT 06103

COPY MAILED

NOV 2 0 2008

OFFICE OF PETITIONS

In re Application of	:	
David Pfund	:	
Application No. 29/242,093	:	DECISION ON PETITION
Filed: November 4, 2005	:	
Attorney Docket No. ELP-0112	:	

This is a decision on the petition under the unintentional provisions of 37 CFR 1.137(b), filed February 25, 2008, to revive the above-identified application.

The petition is **GRANTED**.

The two-month period for filing an appeal brief under 37 CFR 41.37 (accompanied by the fee required by 37 CFR 41.20(b)(2)), runs from the date of this decision.

This application became abandoned for failure to timely file a reply within the meaning of 37 CFR 1.113 to the final Office action of June 20, 2007. The proposed reply required for consideration of a petition to revive must be a Notice of Appeal (and appeal fee required by 37 CFR 41.20(b)(2)), an amendment that *prima facie* places the application in condition for allowance, a Request for Continued Examination (RCE) and submission (37 CFR 1.114), or the filing of a continuing application under 37 CFR 1.53(b). See MPEP 711.03(c)(III)(A)(2). A three (3) month extension of time pursuant to the provisions of 37 CFR 1.136(a) were obtained. Accordingly, the date of abandonment of this application is December 21, 2007. The Notice of Abandonment was mailed April 15, 2008.

The petition satisfies the requirements of 37 CFR 1.137(b) in that petitioner has supplied (1) the reply in the form of a Notice of Appeal; (2) the petition fee of $770; (3) a proper statement of unintentional delay; and (4) a terminal disclaimer and fee as required by 37 CFR 1.137(d).

Telephone inquiries concerning this decision should be directed to Terri Williams at (571) 272-2991.

This application is being referred to Technology Center AU 2914 to await the filing of an appeal brief or for such other appropriate reply as may be submitted to continue prosecution of the application.

Chris Bottorff
Petitions Examiner
Office of Petitions

UNITED STATES PATENT AND TRADEMARK OFFICE

Commissioner for Patents
United States Patent and Trademark Office
P.O. Box 1450
Alexandria, VA 22313-1450
www.uspto.gov

PEPSICO, INC.
c/o GOODWIN PROCTER LLP
599 LEXINGTON AVE
NEW YORK NY 10022

COPY MAILED

JAN 11 2007

OFFICE OF PETITIONS

In re Application of :
Jeffrey W. George et al. :
Application No. 29/242,100 : ON PETITION
Filed: November 3, 2005 :
Attorney Docket No. 40002-12342-A :

This is a decision on the petition filed December 15, 2006 under 37 CFR 1.137(b),[1] to revive the above-identified application.

The petition under 37 CFR 1.137 (b) is **GRANTED**.

This application became abandoned December 8, 2006 for failure to timely pay the issue fee on or before December 7, 2006. The instant petition and this decision precede the mailing of the Notice of Abandonment.

Additionally, there is no indication that petitioner herein was ever empowered to prosecute the instant application. If petitioner desires to receive future correspondence regarding this application, the appropriate power of attorney documentation must be submitted. A courtesy copy of this decision will be mailed to petitioner. However, all future correspondence will be directed to the address of record until such time as appropriate instructions are received to the contrary.

---

[1] Effective December 1, 1997, the provisions of 37 CFR 1.137(b) now provide that where the delay in reply was unintentional, a petition may be filed to revive an abandoned application or a lapsed patent pursuant to 37 CFR 1.137(b). A grantable petition filed under the provisions of 37 CFR 1.137(b) must be accompanied by:

(1) the required reply, unless previously filed. In a nonprovisional application abandoned for failure to prosecute, the required reply may be met by the filing of a continuing application. In a nonprovisional application filed on or after June 8, 1995, and abandoned for failure to prosecute, the required reply may also be met by the filing of a request for continued examination in compliance with § 1.114. In an application or patent, abandoned or lapsed for failure to pay the issue fee or any portion thereof, the required reply must be the payment of the issue fee or any outstanding balance thereof.

(2) the petition fee as set forth in 37 CFR 1.17(m);

(3) a statement that the entire delay in filing the required reply from the due date for the reply until the filing of a grantable petition pursuant to 37 CFR 1.137(b) was unintentional. The Commissioner may required additional information where there is a question whether the delay was unintentional; and

(4) any terminal disclaimer (and fee as set forth in 37 CFR 1.20(d)) required pursuant to 37 CFR 1.137(c)).

All other requirements of 37 CFR 1.137(b) having now been met, this application file is being forwarded to the Publishing Division to be processed into a patent.

Telephone inquiries concerning this matter may be directed to the undersigned Petitions Attorney at (571) 272-3212.

Patricia Faison-Ball

Patricia Faison-Ball
Senior Petitions Attorney
Office of Petitions

cc:
RICHARD STOCKTON
BANNER AND WITCOFF LTD
TEN S WACKER DR STE 3000
CHICAGO, IL 60606

UNITED STATES PATENT AND TRADEMARK OFFICE

Commissioner for Patents
United States Patent and Trademark Office
P.O. Box 1450
Alexandria, VA 22313-1450
www.uspto.gov

BRINKS HOFER GILSON & LIONE
P.O. BOX 10395
CHICAGO, IL 60610

COPY MAILED

JUL 08 2008

OFFICE OF PETITIONS

In re Application of :
Eiichi NAKANISHI :
Application No. 29/242,172 : DECISION ON PETITION
Filed: November 7, 2005 :
Attorney Docket No. 12555-82 :

This is a decision on the petition, under 37 CFR 1.137(b) filed July 3, 2007 and the petition filed September 17, 2007, which is being treated as a petition under 37 CFR 1.181 (no fee) requesting withdrawal of the holding of abandonment in the above-identified application.

The petition under 37 CFR 1.181 is **DISMISSED .**

The petition under 37 CFR 1.137(b) is **GRANTED**.

This application was held abandoned for failure to timely pay the issue and publication fees on or before February 6, 2006, as required by the Notice of Allowance and Fee(s) Due (Notice), mailed November 6, 2006.

Regarding the petition under 37CFR 1.181, petitioner asserts that the Notice dated November 6, 2006 was not received, provides copies of the documents obtained from Image File Wrapper and request refund of the petition and Terminal Disclaimer fee.

A review of the written record indicates no irregularity in the mailing of the Notice, and, in the absence of any irregularity, there is a strong presumption that the Notice was properly mailed to the practitioner at the address of record. The address at the time of the mailing of the Notice indicates that the correspondence address was:

Brent J. Trout,
516 Walnut
Des Moines, IA 50309

The record shows that the Office did in fact mail the Notice to the above-identified address.

The petition satisfies the requirements of 37 CFR 1.137(b) in that petitioner has supplied (1) the reply in the form of payment of the Issue Fee of $400, (2) the petition fee of $750; and (3) a proper statement of unintentional delay.

Telephone inquires concerning this decision should be directed to Diane Goodwyn at (571) 272-6735.

This application is being referred to the Office of Data Management.

/Thurman Page/
Thurman Page
Petitions Examiner
Office of Petitions

UNITED STATES PATENT AND TRADEMARK OFFICE

Commissioner for Patents
United States Patent and Trademark Office
P.O. Box 1450
Alexandria, VA 22313-1450
www.uspto.gov

WILLIAM COLLARD
COLLARD & ROE, P.C.
1077 NORTHERN BOULEVARD
ROSLYN NY 11576

COPY MAILED

NOV 2 7 2007

OFFICE OF PETITIONS

In re Application of :
Qiu Jian Ping :
Application No. 29/242,270 : ON PETITION
Filed: November 8, 2005 :
:

This is a decision on the petition under 37 CFR 1.137(b), filed October 22, 2007, to revive the above-identified application.

The petition is **DISMISSED**.

Any request for reconsideration of this decision must be submitted within TWO (2) MONTHS from the mail date of this decision. Extensions of time under 37 CFR 1.136(a) are permitted. The reconsideration request should include a cover letter entitled "Renewed Petition under 37 CFR 1.137(b)." This is **not** a final agency action within the meaning of 5 U.S.C. § 704.

The above-identified application became abandoned for failure to submit corrected drawings in a timely manner in reply to the Notice of Allowance/Allowability mailed June 13, 2007 which set a statutory period for reply of three (3) months. Accordingly, by operation of law, the above-identified application became abandoned on September 14, 2007.

A grantable petition under 37 CFR 1.137(b) must be accompanied by: (1) the required reply, unless previously filed; (2) the petition fee as set forth in 37 CFR 1.17(m); (3) a statement that the entire delay in filing the required reply from the due date for the reply until the filing of a grantable petition pursuant to 37 CFR 1.137(b) was unintentional; and (4) any terminal disclaimer (and fee as set forth in 37 CFR 1.20(d)) required by 37 CFR 1.137(d). Where there is a question as to whether either the abandonment or the delay in filing a petition under 37 CFR 1.137 was unintentional, the Commissioner may require additional information. See MPEP 711.03(c)(III)(C) and (D). The instant petition lacks item(s) (3) and (4). Petitioner has not filed a proper statement of unintentional delay and no terminal disclaimer has been filed.

Application No. 29/242,270

Further correspondence with respect to this matter should be addressed as follows:

By Mail:
Mail Stop PETITION
Commissioner for Patents
P. O. Box 1450
Alexandria, VA 22313-1450

By hand:
U. S. Patent and Trademark Office
Customer Service Window, Mail Stop Petitions
Randolph Building
401 Dulany Street
Alexandria, VA 22314

The centralized facsimile number is **(571) 273-8300.**

Telephone inquiries concerning this decision should be directed to the Carl Friedman at (571) 272-6842.

David Bucci
Petitions Examiner
Office of Petitions

UNITED STATES PATENT AND TRADEMARK OFFICE

Commissioner for Patents
United States Patent and Trademark Office
P.O. Box 1450
Alexandria, VA 22313-1450
www.uspto.gov

COLLARD & ROE, P.C.
1077 NORTHERN BOULEVARD
ROSLYN NY 11576

COPY MAILED

FEB 0 1 2008

OFFICE OF PETITIONS

In re Application of :
Qui Jian Ping :
Application No. 29/242,270 : ON PETITION
Filed: November 8, 2005 :
Attorney Docket No. :

This is a decision on the renewed petition under 37 CFR 1.137(b), filed December 3, 2007, to revive the above-identified application.

The petition is **GRANTED**.

The above-identified application became abandoned for failure to timely file corrected drawings in response to the Notice of Allowance mailed June 13, 2007, which set a statutory period for reply of three (3) months. Accordingly, by operation of law, the above-identified application became abandoned on September 14, 2007.

The petition decision mailed November 27, 2007 indicates the petition under 37 CFR 1.137(b) filed October 22, 2007 was dismissed as failing to provide a proper statement on unintentional delay and terminal disclaimer.

The renewed petition satisfies the conditions for revival pursuant to the provisions of 37 CFR 1.137(b) in that (1) the reply in the form of the corrected drawing; (2) the petition fee of $1,540; (3) the required statement of unintentional delay; and a terminal disclaimer and fee required under 37 CFR 1.137(d) have been received. Accordingly, the corrected drawing is accepted as having been unintentionally delayed.

Telephone inquiries concerning this decision should be directed to Carl Friedman at (571) 272-6842.

The application file is being referred to the Office of Patent Publication..

David Bucci
Petitions Examiner
Office of Petitions

UNITED STATES PATENT AND TRADEMARK OFFICE

Commissioner for Patents
United States Patent and Trademark Office
P.O. Box 1450
Alexandria, VA 22313-1450
www.uspto.gov

GUICE PATENTS PLLC
12647 GALVESTON COURT #302
MANASSAS VA 20112

MAILED

APR 2 7 2010

OFFICE OF PETITIONS

In re Application of	:	
Ching Chen CHEN	:	
Application No. 29/242,313	:	DECISION ON PETITION
Filed: November 09, 2005	:	
Attorney Docket No. 4615-0021	:	

This is a decision on the petition, filed November 24, 2009, which is being treated as a petition under 37 CFR 1.8(b) (no fee), requesting withdrawal of the holding of abandonment in the above-identified application.

The petition under 37 CFR 1.8(b) is **GRANTED**.

This application was held abandoned for failure to timely respond to the non-final Office action of October 24, 2006, which set a three (3) month shortened statutory period for reply. Accordingly, a reply was due on January 24, 2007.

Petitioner asserts that the abandonment be withdrawn as petitioner timely filed a response to the non-final Office action mailed, October 24, 2006.

A review of the Office records indicates that the response was timely filed with a one (1) month extension of time on February 20, 2007, which makes the reply timely filed.

Telephone inquiries concerning this decision should be directed to Michelle R. Eason at (571) 272-4231.

The application file is being referred to Technology Center AU 2911 for appropriate action on the concurrently filed amendment.

Thurman K. Page
Petitions Examiner
Office of Petitions

Attorney Docket: 4615-0021

IN THE UNITED STATES PATENT AND TRADEMARK OFFICE

Applicant	:	Ching Chen CHEN
Application No.	:	29/242,313
Filed	:	November 9, 2005
Title	:	BATH BRUSH
Group Art Unit	:	2911
Examiner	:	Fluegeman, Deanna L.
Docket No.	:	4615-0021

MAIL STOP PETITIONS
Honorable Commissioner for Patents
P.O. Box 1450
Alexandria, VA 22313-1450

PETITION TO WITHDRAW HOLDING OF ABANDONMENT UNDER 37 C.F.R. § 1.181(a)

Sir:

The undersigned acknowledges the Notice of Abandonment mailed on May 25, 2007, but respectfully requests that the Director withdraw the holding of abandonment for the reasons set forth below.

Subsequent to the USPTO's acceptance of the Power of Attorney on November 10, 2009, the undersigned attorney obtained Private PAIR access to the subject application's files and discovered the following.

In response to a Non-Final Rejection mailed on October 24, 2006, the Applicant's previous attorney, Troxell Law Office PLLC, submitted an Amendment and a Petition for a One Month Extension of Time. These documents were submitted to the USPTO on February 20, 2007 within six months from the mailing date of the Non-Final Rejection. Copies of the Amendment and a Petition for a One Month Extension of Time submitted on February 20, 2007 are attached.

Upon review of the Image File Wrapper on the USPTO's Private PAIR for the subject application, the undersigned discovered that the Image File Wrapper included the Amendment and the Petition for a One Month Extension of Time that were filed on February 20, 2007. Each document is stamped by the USPTO as being received on February 20, 2007. However, a footnote was added to the bottom of each page of the

Amendment and the Petition for a One Month Extension of Time stating: "Copied from 29242213 on 06/11/2007".

Therefore, Applicant submits that the Amendment and the Petition for a One Month Extension of Time were timely filed, but were mistakenly filed with another application until June 11, 2007, which was after the Notice of Abandonment had been issued. The undersigned respectfully traverses the holding of abandonment and petitions the Director to withdraw the holding of abandonment.

Respectfully submitted,

Date: November 24, 2009

By: John R. Guice, Jr.
John R. Guice, Jr.
Reg. No. 39,699

GUICE PATENTS PLLC
12647 Galveston Court, # 302
Manassas, Virginia 20112
Telephone: 703-659-0862
Facsimile: 703-659-0930

CUSTOMER NUMBER: 83221

PTO/SB/27 (05-03)
Approved for use through 04/30/2003. OMB 0651-0031
U.S. Patent and Trademark Office; U.S. DEPARTMENT OF COMMERCE
Under the Paperwork Reduction Act of 1995, no persons are required to respond to a collection of information unless it displays a valid OMB control number.

REQUEST FOR EXPEDITED EXAMINATION OF A DESIGN APPLICATION (37 CFR 1.155)

Application Number	TO BE ASSIGNED
Filing Date	November 9, 2005
First Named Inventor	Wilson W. Smith, III
Title	Portion Of A Shoe Upper
Atty Docket Number	015127.00598

113000 U.S.PTO
29/242327
110905

HAND DELIVER TO THE DESIGN GROUP DIRECTOR'S OFFICE
-or- ADDRESS TO:
MAIL STOP EXPEDITED DESIGN
COMMISSIONER FOR PATENTS
P.O. Box 1450
Alexandria, VA 22313-1450

This is a request for expedited examination of a design application under 37 CFR 1.155.

NOTE: If the Request made by this form accompanies original application papers, include form PTO/SB/18 "Design Patent Application Transmittal" or its equivalent.

A preexamination search was conducted. The field of search was:

D2/902, 907, 908, 943, 944, 969, 972, 973 and 974

Related applications: _____

If not previously filed for the above-identified application, the following items required by 37 CFR 1.155 are enclosed:

Formal drawings (see 37 CFR 1.84).

The fee set forth in 37 CFR 1.17(k).

An information disclosure statement in compliance with 37 CFR 1.98.

11.21.05
Approved
Jacqueline M. Stone
Jacqueline M. Stone, Director
Technology Center 1700

November 9, 2005
Date

David R. Gerk
Signature

202-824-3000
Telephone Number

David R. Gerk-Registration No. 56,901
Typed or printed name

WARNING: Information on this form may become public. Credit card information should not be included on this form. Provide credit card information and authorization on PTO-2038.

This collection of information is required by 37 CFR 1.155. The information is required to obtain or retain a benefit by the public which is to file (and by the USPTO to process) an application. Confidentiality is governed by 35 U.S.C. 122 and 37 CFR 1.14. This collection is estimated to take 6 minutes to complete, including gathering, preparing, and submitting the completed application form to the USPTO. Time will vary depending upon the individual case. Any comments on the amount of time you require to complete this form and/or suggestions for reducing this burden, should be sent to the Chief Information Officer, U.S. Patent and Trademark Office, U.S. Department of Commerce, P.O. Box 1450, Alexandria, VA 22313-1450. DO NOT SEND FEES OR COMPLETED FORMS TO THIS ADDRESS. SEND TO: Mail Stop Expedited Design, Commissioner for Patents, P.O. Box 1450, Alexandria, VA 22313-1450.

If you need assistance in completing the form, call 1-800-PTO-9199 and select option 2.

11/10/2005 HLE333 00000019 190733 29242327
04 FC:1802 900.00 DA

PTO/SB/27 (05-03)
Approved for use through 04/30/2003. OMB 0651-0031
U.S. Patent and Trademark Office; U.S. DEPARTMENT OF COMMERCE
Under the Paperwork Reduction Act of 1995, no persons are required to respond to a collection of information unless it displays a valid OMB control number.

REQUEST FOR EXPEDITED EXAMINATION OF A DESIGN APPLICATION (37 CFR 1.155)

Application Number	TO BE ASSIGNED
Filing Date	November 9, 2005
First Named Inventor	Jason Gregory Petrie
Title	Portion Of A Shoe Upper
Atty Docket Number	015127.00559

113000 U.S.PTO
29/242328
110905

HAND DELIVER TO THE DESIGN GROUP DIRECTOR'S OFFICE
-or- ADDRESS TO:
MAIL STOP EXPEDITED DESIGN
COMMISSIONER FOR PATENTS
P.O. Box 1450
Alexandria, VA 22313-1450

This is a request for expedited examination of a design application under 37 CFR 1.155.

NOTE: If the Request made by this form accompanies original application papers, include form PTO/SB/18 "Design Patent Application Transmittal" or its equivalent.

A preexamination search was conducted. The field of search was:

D2/896, 902, 907, 908, 943, 944, 945, 946, 969, 972, 973 and 974

Related applications: _____

If not previously filed for the above-identified application, the following items required by 37 CFR 1.155 are enclosed:

Formal drawings (see 37 CFR 1.84).

The fee set forth in 37 CFR 1.17(k).

An information disclosure statement in compliance with 37 CFR 1.98.

11-21-05
Approved
Jacqueline M. Stone
Jacqueline M. Stone, Director
Technology Center 1700

November 9, 2005
Date

Signature

202-824-3000
Telephone Number

David R. Gerk-Registration No. 56,901
Typed or printed name

WARNING: Information on this form may become public. Credit card information should not be included on this form. Provide credit card information and authorization on PTO-2038.

This collection of information is required by 37 CFR 1.155. The information is required to obtain or retain a benefit by the public which is to file (and by the USPTO to process) an application. Confidentiality is governed by 35 U.S.C. 122 and 37 CFR 1.14. This collection is estimated to take 6 minutes to complete, including gathering, preparing, and submitting the completed application form to the USPTO. Time will vary depending upon the individual case. Any comments on the amount of time you require to complete this form and/or suggestions for reducing this burden, should be sent to the Chief Information Officer, U.S. Patent and Trademark Office, U.S. Department of Commerce, P.O. Box 1450, Alexandria, VA 22313-1450. DO NOT SEND FEES OR COMPLETED FORMS TO THIS ADDRESS. SEND TO: Mail Stop Expedited Design, Commissioner for Patents, P.O. Box 1450, Alexandria, VA 22313-1450.

If you need assistance in completing the form, call 1-800-PTO-9199 and select option 2.

11/10/2005 HLE333 00000018 29242328
04 FC:1802 900.00 DA

PTO/SB/27 (09-04)
Approved for use through 07/31/2006. OMB 0651-0031
U.S. Patent and Trademark Office; U.S. DEPARTMENT OF COMMERCE
Under the Paperwork Reduction Act of 1995, no persons are required to respond to a collection of information unless it displays a valid OMB control number.

REQUEST FOR EXPEDITED EXAMINATION OF A DESIGN APPLICATION (37 CFR 1.155)

Application Number	TBA
Filing Date	November 9, 2005
First Named Inventor	Charles CUMMINS
Title	User Interface For A Portion Of A Display Screen
Atty Docket Number	013797.01293

13000 U.S.PTO 29/242329 110905

ADDRESS TO:
MAIL STOP EXPEDITED DESIGN
COMMISSIONER FOR PATENTS
P.O. Box 1450
Alexandria, VA 22313-1450

This is a request for expedited examination of a design application under 37 CFR 1.155.

NOTE: If the Request made by this form accompanies original application papers, include form PTO/SB/18 "Design Patent Application Transmittal" or its equivalent.

A preexamination search was conducted. The field of search was:

Class D14 (subclasses 485, 486, 487, 488, 489, 490, 491, 492, 493, 494, 495); Class D18 (subclasses 24, 25, 26, 27, 28, 29, 30, 31, 32, 33); Class D19 (subclasses 6, 7); Class D20 (subclasses 11, 18); Class D21 (subclasses 324, 325, 326, 327, 328, 329, 330, 331, 332, 333); Class 345 (subclasses 683, 902), Class 715 (subclasses 700-726, 762-876, 973-977)

Related applications: 29/237,300 and 29/238,395

If not previously filed for the above-identified application, the following items required by 37 CFR 1.155 are enclosed:
Formal drawings (see 37 CFR 1.84).
The fee set forth in 37 CFR 1.17(k).
An information disclosure statement in compliance with 37 CFR 1.98.

11-21-05
Approved
Jacqueline M. Stone
Jacqueline M. Stone, Director
Technology Center 1700

Signature

November 9, 2005
Date

Ross A. Dannenberg
Typed or printed name

49,024
Registration Number, if applicable

(202) 824-3000
Telephone Number

WARNING: Information on this form may become public. Credit card information should not be included on this form. Provide credit card information and authorization on PTO-2038.

This collection of information is required by 37 CFR 1.155. The information is required to obtain or retain a benefit by the public which is to file (and by the USPTO to process) an application. Confidentiality is governed by 35 U.S.C. 122 and 37 CFR 1.11 and 1.14. This collection is estimated to take 6 minutes to complete, including gathering, preparing, and submitting the completed application form to the USPTO. Time will vary depending upon the individual case. Any comments on the amount of time you require to complete this form and/or suggestions for reducing this burden, should be sent to the Chief Information Officer, U.S. Patent and Trademark Office, U.S. Department of Commerce, P.O. Box 1450, Alexandria, VA 22313-1450. DO NOT SEND FEES OR COMPLETED FORMS TO THIS ADDRESS. SEND TO: Mail Stop Expedited Design, Commissioner for Patents, P.O. Box 1450, Alexandria, VA 22313-1450.
If you need assistance in completing the form, call 1-800-PTO-9199 and select option 2.

11/10/2005 HLE333 00000017 190733 29242329
04 FC:1802 900.00 DA

PTO/SB/27 (09-04)
Approved for use through 07/31/2006. OMB 0651-0031
U.S. Patent and Trademark Office; U.S. DEPARTMENT OF COMMERCE
Under the Paperwork Reduction Act of 1995, no persons are required to respond to a collection of information unless it displays a valid OMB control number.

REQUEST FOR EXPEDITED EXAMINATION OF A DESIGN APPLICATION (37 CFR 1.155)		
	Application Number	Not Yet Assigned
	Filing Date	Concurrently Herewith
	First Named Inventor	Heather M. Marvin
	Title	SHOE SOLE
	Atty Docket Number	A0501.70000US01

112900 U.S. PTO
29/242606
111005

ADDRESS TO:
MS Expedited Design
Commissioner for Patents
P.O. Box 1450
Alexandria, VA 22313-1450

This is a request for expedited examination of a design application under 37 CFR 1.155.

NOTE: If the Request made by this form accompanies original application papers, include form PTO/SB/18 "Design Patent Application Transmittal" or its equivalent.

Approved 12/19/05
Jacqueline M. Stone
Jacqueline M. Stone, Director
Technology Center 1700

A preexamination search was conducted. The field of search was:

Class 36, subclasses 32R, 59C, 67A, 67D, 67R;
Design Class 2 subclasses 947, 948, 951, 952, 953, 954, 955, 956, 957, 959, 960, 962;
Locarno Class 02-04

Related applications: 29/217381

If not previously filed for the above-identified application, the following items required by 37 CFR 1.155 are enclosed:

- Formal drawings (see 37 CFR 1.84).
- The fee set forth in 37 CFR 1.17(k).
- An information disclosure statement in compliance with 37 CFR 1.98.

11/16/2005 MBIZUNES 00000061 29242606
01 FC:1802 900.00 OP

Signature — November 10, 2005 (Date)

Walt Norfleet (Typed or printed name) — 52,078 (Registration Number, if applicable)

(617) 646-8260 (Telephone Number)

Express Mail Label No. EV717202292US Dated: 10-Nov-05

953801.1

UNITED STATES PATENT AND TRADEMARK OFFICE

COMMISSIONER FOR PATENTS
UNITED STATES PATENT AND TRADEMARK OFFICE
P.O. BOX 1450
ALEXANDRIA, VA 22313-1450
www.uspto.gov

GORDON & JACOBSON, P.C.
60 LONG RIDGE ROAD
SUITE 407
STAMFORD CT 06902

COPY MAILED

SEP 17 2007

OFFICE OF PETITIONS

In re Application of :
Warren, al et. :
Application No. 29/242,624 : DECISION ON PETITION
Filed: November 10, 2005 :
Docket No.: LJW-DES-001 :

This is a decision on the petition under 37 CFR 1.181, filed August 8, 2007, to withdraw the holding of abandonment.

The application was held abandoned for failure to timely submit a properly reply to the non-final Office action mailed December 1, 2006. The non-final Office action set a three month shortened statutory period of time for reply. Notice of Abandonment was mailed July 9, 2007.

Petitioners assert that a response to the non-final Office was submitted March 29, 2007 and that the reply included an authorization to charge any fees due to petitioners' deposit account.

The response submitted March 29, 2007 was received and did include authorization to charge any fees that might be due. A one month extension of time was required to make the response timely. The fee, for unknown reasons, was not charged as authorized, to the deposit account.

In view of the evidence thereof, the petition to withdraw the holding of abandonment is hereby **GRANTED**.

The required extension of time has been charge to petitioners' deposit account.

The Notice of Abandonment is hereby **VACATED** and the holding of abandonment is **WITHDRAWN**.

The application file is being forwarded to Technology Center 2900 for further processing.

Telephone inquiries concerning this matter may be directed to the undersigned at 571-272-3205.

Alesia M. Brown
Petitions Attorney
Office of Petitions

UNITED STATES PATENT AND TRADEMARK OFFICE

Commissioner for Patents
United States Patent and Trademark Office
P.O. Box 1450
Alexandria, VA 22313-1450
www.uspto.gov

DICKINSON WRIGHT PLLC
38525 WOODWARD AVENUE
SUITE 2000
BLOOMFIELD HILLS, MI 48304-2970

COPY MAILED

AUG 05 2008

In re Application of :
Marc Francis, et al. :
Application No. 29/242,625 : ON PETITION
Filed: November 10, 2005 :
Attorney Docket No. 60340-062 :

This is a decision on the petition, filed April 9, 2008, to revive the above-identified application under 37 CFR 1.137(b).

The petition is **DISMISSED**.

Any request for reconsideration of this decision must be submitted within TWO (2) MONTHS from the mail date of this decision. Extensions of time under 37 CFR 1.136(a) are permitted. The reconsideration request should include a cover letter entitled "Renewed Petition under 37 CFR 1.137(b)." This is **not** a final agency action within the meaning of 5 U.S.C. § 704.

The application became abandoned for failure s to timely pay the issue and publication fees on or before August 7, 2007, as required by the Notice of Allowance and Fee(s) Due, mailed May 7, 2007. Accordingly, the application became abandoned on August 8, 2007. A Notice of Abandonment was mailed on September 25, 2007. On April 9, 2008, the present petition was filed.

A grantable petition under 37 CFR 1.137(b)[1] must be accompanied by: (1) the required reply, unless previously filed; (2) the petition fee as set forth in 37 CFR 1.17(m); (3) a statement that the entire delay in filing the required reply from the due date for the reply until the filing of a grantable petition pursuant to 37 CFR 1.137(b) was unintentional; and (4) any terminal disclaimer (and fee as set forth in 37 CFR 1.20(d)) required by 37 CFR 1.137(d). Where there is a question as to whether either the abandonment or the delay in filing a petition under 37 CFR 1.137 was unintentional, the Director may require additional information. See MPEP 711.03(c)(II)(C) and (D).

The petition lacks items (1) and (4) above.

[1] As amended effective December 1, 1997. See Changes to Patent Practice and Procedure; Final Rule Notice, 62 Fed. Reg. 53131, 53194-95 (October 10, 1997), 1203 Off. Gaz. Pat. Office 63, 119-20 (October 21, 1997).

As to item (1) - Effective September 30, 2007, the issue fee was increased to $410. The issue fee submitted on April 9, 2008 was $400; therefore, the fee was deficient by $10. No authorization to charge any fee deficient to a deposit account was given. In an application or patent, abandoned or lapsed for failure to pay the issue fee or any portion thereof, the required reply must be the payment of the issue fee or any outstanding balance thereof.

As to item (4) - Since the above-identified application is a design application, 37 CFR 1.137(d) requires a terminal disclaimer dedicating to the public a terminal part of the term of any patent granted thereon equivalent to the period of abandonment of the application. The period of abandonment will be computed to be the number of months from the date of abandonment to the date of filing a grantable petition. A terminal disclaimer fee of $130 ($65 if small entity) is required pursuant to 37 CFR 1.20(d). If the terminal disclaimer is signed by an assignee, the assignee must comply with the requirements of 37 CFR 3.73(b).

Further correspondence with respect to this matter should be addressed as follows:

By mail:
Mail Stop PETITION
Commissioner for Patents
Post Office Box 1450
Alexandria, VA 22313-1450

By hand:
U.S. Patent and Trademark Office
Customer Service Window, Mail Stop PETITION
Randolph Building
401 Dulany Street
Alexandria, VA 22314

The centralized facsimile number is **(571) 273-8300**.

Any questions concerning this matter may be directed to the undersigned at (571) 272-3204.

Sherry D. Brinkley
Petitions Examiner
Office of Petitions

UNITED STATES PATENT AND TRADEMARK OFFICE

UNITED STATES DEPARTMENT OF COMMERCE
United States Patent and Trademark Office
Address: COMMISSIONER FOR PATENTS
P.O. Box 1450
Alexandria, Virginia 22313-1450
www.uspto.gov

APPLICATION NUMBER	FILING OR 371(C) DATE	FIRST NAMED APPLICANT	ATTY. DOCKET NO./TITLE
29/242,625	11/10/2005	Marc Francis	60340-062

CONFIRMATION NO. 2425

POA ACCEPTANCE LETTER

59582
DICKINSON WRIGHT PLLC
38525 WOODWARD AVENUE
SUITE 2000
BLOOMFIELD HILLS, MI 48304-2970

OC000000031380686

Date Mailed: 08/05/2008

NOTICE OF ACCEPTANCE OF POWER OF ATTORNEY

This is in response to the Power of Attorney filed 04/09/2008.

The Power of Attorney in this application is accepted. Correspondence in this application will be mailed to the above address as provided by 37 CFR 1.33.

/sdbrinkley/

Office of Data Management, Application Assistance Unit (571) 272-4000, or (571) 272-4200, or 1-888-786-0101

UNITED STATES PATENT AND TRADEMARK OFFICE

UNITED STATES DEPARTMENT OF COMMERCE
United States Patent and Trademark Office
Address: COMMISSIONER FOR PATENTS
P.O. Box 1450
Alexandria, Virginia 22313-1450
www.uspto.gov

APPLICATION NUMBER	FILING OR 371(C) DATE	FIRST NAMED APPLICANT	ATTY. DOCKET NO./TITLE
29/242,625	11/10/2005	Marc Francis	60340-062

CONFIRMATION NO. 2425

POWER OF ATTORNEY NOTICE

27305
HOWARD & HOWARD ATTORNEYS, P.C.
THE PINEHURST OFFICE CENTER, SUITE #101
39400 WOODWARD AVENUE
BLOOMFIELD HILLS, MI 48304-5151

Date Mailed: 08/05/2008

NOTICE REGARDING CHANGE OF POWER OF ATTORNEY

This is in response to the Power of Attorney filed 04/09/2008.

- The Power of Attorney to you in this application has been revoked by the assignee who has intervened as provided by 37 CFR 3.71. Future correspondence will be mailed to the new address of record(37 CFR 1.33).

/sdbrinkley/

Office of Data Management, Application Assistance Unit (571) 272-4000, or (571) 272-4200, or 1-888-786-0101

UNITED STATES PATENT AND TRADEMARK OFFICE

Commissioner for Patents
United States Patent and Trademark Office
P.O. Box 1450
Alexandria, VA 22313-1450
www.uspto.gov

DICKINSON WRIGHT PLLC
38525 WOODWARD AVENUE
SUITE 2000
BLOOMFIELD HILLS, MI 48304-2970

COPY MAILED

JAN 3 0 2009

OFFICE OF PETITIONS

In re Application of :
Marc Francis, et al. :
Application No. 29/242,625 : ON PETITION
Filed: November 10, 2005 :
Attorney Docket No. 60340-062 :

This is a decision on the renewed petition, filed November 4, 2008, to revive the above-identified application under 37 CFR 1.137(b).

A review of the record discloses that this application became abandoned for a failure to timely pay the issue fee on or before August 7, 2007. A Notice of Abandonment was mailed on September 25, 2007. On April 9, 2008, a petition under 37 CFR 1.137(b) was filed; however, the petition was dismissed in a decision mailed August 5, 2008. On November 4, 2008, the present petition was filed.

While petitioner has included, *inter alia*, a terminal disclaimer and fee, the terminal disclaimer cannot be accepted, as it appears to be signed on behalf of an assignee without the statement required by 37 CFR 3.73(b). It is also noted that the petitioner failed to submit the balance of the issue fee. The petition cannot be granted until the Office receives the requisite issue fee and a properly signed terminal disclaimer.

Petitioner should note that the issue fee was further increased to $430, effective October 2, 2008. Since any fee amount paid on or after October 2, 2008 must be paid in the revised amount, the $400 issue fee payment submitted on April 9, 2008, is deficient by $30.

The petition has been reconsidered as requested, but the result is the same. The petition is **DISMISSED**

Any further request for reconsideration of this decision must be submitted within TWO (2) MONTHS from the mail date of this decision. Extensions of time under 37 CFR 1.136(a) are permitted. The reconsideration request should include a cover letter entitled "Renewed Petition under 37 CFR 1.137(b)" and the omissions identified above. . This is **not** a final agency action within the meaning of 5 U.S.C. § 704.

Further correspondence with respect to this matter should be delivered through one of the following mediums:

By mail:	Mail Stop PETITIONS Commissioner for Patents Post Office Box 1450 Alexandria, VA 22313-1450
By hand:	Customer Service Window Mail Stop Petitions Randolph Building 401 Dulany Street Alexandria, VA 22314
By fax:	(571) 273-8300 ATTN: Office of Petitions
By Internet:	EFS-Web[1]

Any questions concerning this matter may be directed to the undersigned at (571) 272-3204.

Sherry D. Brinkley
Petitions Examiner
Office of Petitions

[1] www.uspto.gov/ebc/efs_help.html (for help using EFS-Web call the Patent Electronic Business Center at (866) 217-9197)

UNITED STATES PATENT AND TRADEMARK OFFICE

Commissioner for Patents
United States Patent and Trademark Office
P.O. Box 1450
Alexandria, VA 22313-1450
www.uspto.gov

DICKINSON WRIGHT PLLC
38525 WOODWARD AVENUE
SUITE 2000
BLOOMFIELD HILLS, MI 48304-2970

COPY MAILED

MAY 27 2009

OFFICE OF PETITIONS

In re Application of
Marc Francis, et al.
Application No. 29/242,625
Filed: November 10, 2005
Attorney Docket No. 60340-062

ON PETITION

This is a decision in response to the renewed petition, filed April 7, 2009, to revive the above-identified design application under 37 CFR 1.137(b).

The petition is **GRANTED**.

This application became abandoned for a failure to timely pay the issue fee on or before August 7, 2007, as required by the Notice of Allowance and Fee(s) Due and the Notice of Allowability, mailed May 7, 2007. A Notice of Abandonment was mailed September 27, 2007. The present petition is filed in response to a decision mailed January 30, 2009.

The present petition satisfies the requirements of 37 CFR 1.137(b) in that petitioner has supplied (1) the reply in the form of the requisite issue fee, (2) the petition fee of $770, (3) an adequate statement of unintentional delay, and (4) a terminal disclaimer and fee as required by 37 CFR 1.137(d).

The terminal disclaimer filed April 7, 2009 is accepted and has been made of record. Any continuing application filed from this application must contain a copy of the terminal disclaimer. The copy of the terminal disclaimer must be filed with a cover letter requesting the terminal disclaimer be recorded on the continuing application. A copy of this decision should be attached to the cover letter.

The application is being referred to the Office of Data Management for further processing.

Telephone inquires related to this decision should be directed to the undersigned at (571) 272-3204. Telephone inquiries related to processing as a patent should be directed to (571) 272-4200.

Sherry D. Brinkley
Petitions Examiner
Office of Petitions

PTO/SB/27 (05-03)
Approved for use through 04/30/2003. OMB 0651-0031
U.S. Patent and Trademark Office; U.S. DEPARTMENT OF COMMERCE
Under the Paperwork Reduction Act of 1995, no persons are required to respond to a collection of information unless it displays a valid OMB control number.

REQUEST FOR EXPEDITED EXAMINATION OF A DESIGN APPLICATION (37 CFR 1.155)

Application Number	TBD
Filing Date	November 15, 2005
First Named Inventor	Nicola Mueller
Title	Portion Of A Shoe Upper
Atty Docket Number	015127.00588

112960 U.S.PTO
29/242644
111505

HAND DELIVER TO THE DESIGN GROUP DIRECTOR'S OFFICE
-or- ADDRESS TO:
MAIL STOP EXPEDITED DESIGN
COMMISSIONER FOR PATENTS
P.O. Box 1450
Alexandria, VA 22313-1450

This is a request for expedited examination of a design application under 37 CFR 1.155.

NOTE: If the Request made by this form accompanies original application papers, include form PTO/SB/18 "Design Patent Application Transmittal" or its equivalent.

12/19/05
Approved
Jacqueline M. Stone
Jacqueline M. Stone, Director
Technology Center 2900

A preexamination search was conducted. The field of search was:

D2/896, 902, 907, 908, 943, 944, 945, 946, 969, 972, 973, and 974

Related applications: _____

If not previously filed for the above-identified application, the following items required by 37 CFR 1.155 are enclosed:

Formal drawings (see 37 CFR 1.84).

The fee set forth in 37 CFR 1.17(k).

An information disclosure statement in compliance with 37 CFR 1.98.

November 15, 2005
Date

Signature

202-824-3000
Telephone Number

Anthony W. Kandare, Reg. No. 48,830
Typed or printed name

WARNING: Information on this form may become public. Credit card information should not be included on this form. Provide credit card information and authorization on PTO-2038.

This collection of information is required by 37 CFR 1.155. The information is required to obtain or retain a benefit by the public which is to file (and by the USPTO to process) an application. Confidentiality is governed by 35 U.S.C. 122 and 37 CFR 1.14. This collection is estimated to take 6 minutes to complete, including gathering, preparing, and submitting the completed application form to the USPTO. Time will vary depending upon the individual case. Any comments on the amount of time you require to complete this form and/or suggestions for reducing this burden, should be sent to the Chief Information Officer, U.S. Patent and Trademark Office, U.S. Department of Commerce, P.O. Box 1450, Alexandria, VA 22313-1450. DO NOT SEND FEES OR COMPLETED FORMS TO THIS ADDRESS. SEND TO: Mail Stop Expedited Design, Commissioner for Patents, P.O. Box 1450, Alexandria, VA 22313-1450.

If you need assistance in completing the form, call 1-800-PTO-9199 and select option 2.

11/16/2005 JBALINAN 00000052 190733 29242644
04 FC:1802 900.00 DA

UNITED STATES PATENT AND TRADEMARK OFFICE

Commissioner for Patents
United States Patent and Trademark Office
P.O. Box 1450
Alexandria, VA 22313-1450
www.uspto.gov

MAILED

JAN 07 2010

OFFICE OF PETITIONS

GIBSON & DERNIER LLP
900 ROUTE 9 NORTH
SUITE 504
WOODBRIDGE NJ 07095

In re Application of	:	
Minh Lee, et al.	:	
Application No. 29/242,708	:	DECISION ON PETITION
Filed: November 14, 2005	:	TO WITHDRAW
Attorney Docket No. 592/10	:	FROM RECORD
	:	

This is a decision on the Request to Withdraw as attorney or agent of record under 37 C.F.R. § 1.36(b), filed November 2, 2009.

The request is **NOT APPROVED**.

A grantable request to withdraw as attorney/agent of record must be signed by every attorney/agent seeking to withdraw or contain a clear indication that one attorney is signing on behalf of another/others. A request to withdraw will not be approved unless at least 30 (thirty) days would remain between the date of approval and the later of the expiration date of a time to file a response or the expiration date of the maximum time period which can be extended under 37 C.F.R. § 1.136(a).

The request cannot be approved because no certifications were made on the PTO/SB/83.

All future communications from the Office will continue to be directed to the above-listed address until otherwise notified by applicant.

Telephone inquiries concerning this decision should be directed to Terri Johnson at 571-272-2991.

Terri Johnson
Petitions Examiner
Office of Petitions

cc: **VENTRASSIST PTY LTD.**
71 Eagle Street Level 28 Brisbande
Queensland 7000
Australia

UNITED STATES PATENT AND TRADEMARK OFFICE

Commissioner for Patents
United States Patent and Trademark Office
P.O. Box 1450
Alexandria, VA 22313-1450
www.uspto.gov

GIBSON & DERNEIR LLP
900 Route 9 North
Suite 504
Woodbridge, NJ 07095

MAILED

MAR 0 3 2010

OFFICE OF PETITIONS

In re Application of	:	
Minh Lee, et al.	:	
Application No. 29/242,708	:	DECISION ON PETITION
Filed: November 14, 2005	:	TO WITHDRAW
Attorney Docket No. 592/10	:	FROM RECORD
	:	

This is a decision on the renewed Request to Withdraw as attorney or agent of record under 37 C.F.R. § 1.36(b), filed January 12, 2010.

The request is **APPROVED**.

A grantable request to withdraw as attorney/agent of record must be signed by every attorney/agent seeking to withdraw or contain a clear indication that one attorney is signing on behalf of another/others. A request to withdraw will not be approved unless at least 30 (thirty) days would remain between the date of approval and the later of the expiration date of a time to file a response or the expiration date of the maximum time period which can be extended under 37 C.F.R. § 1.136(a).

The request was signed by Matthew B. Dernier on behalf of all attorneys of record. All attorneys/agents have been withdrawn. Applicant is reminded that there is no attorney of record at this time.

The correspondence address of record has been changed and the new correspondence address is the address indicated below.

There is an outstanding Notice of Allowability mailed December 22, 2009 that requires a reply from the applicant.

Telephone inquiries concerning this decision should be directed to Terri Johnson at 571-272-2991.

Terri Johnson
Petitions Examiner
Office of Petitions

cc: **VENTRASSIST PTY LTD.**
126 GREVUKKE STREET
CHATSWOOD, NSW 2067
AUSTRALIA

UNITED STATES PATENT AND TRADEMARK OFFICE

UNITED STATES DEPARTMENT OF COMMERCE
United States Patent and Trademark Office
Address: COMMISSIONER FOR PATENTS
P.O. Box 1450
Alexandria, Virginia 22313-1450
www.uspto.gov

APPLICATION NUMBER	FILING OR 371(C) DATE	FIRST NAMED APPLICANT	ATTY. DOCKET NO./TITLE
29/242,708	11/14/2005	Minh Lee	592/10

CONFIRMATION NO. 8296

POWER OF ATTORNEY NOTICE

27538
GIBSON & DERNIER LLP
900 ROUTE 9 NORTH
SUITE 504
WOODBRIDGE, NJ 07095

OC000000040376296

Date Mailed: 03/02/2010

NOTICE REGARDING CHANGE OF POWER OF ATTORNEY

This is in response to the Power of Attorney filed 01/12/2010.

- The withdrawal as attorney in this application has been accepted. Future correspondence will be mailed to the new address of record. 37 CFR 1.33.

/tsjohnson/

Office of Data Management, Application Assistance Unit (571) 272-4000, or (571) 272-4200, or 1-888-786-0101

UNITED STATES PATENT AND TRADEMARK OFFICE

Commissioner for Patents
United States Patent and Trademark Office
P.O. Box 1450
Alexandria, VA 22313-1450
www.uspto.gov

MAYER BROWN LLP
P.O. BOX 2828
CHICAGO IL 60690

COPY MAILED

JAN 1 1 2008

OFFICE OF PETITIONS

In re Application of :
Johann Lee :
Application No. 29/242,767 : ON PETITION
Filed: November 15, 2005 :
Attorney Docket No. 122428-05129179 :

This is a decision on the petition under 37 CFR 1.137(b), filed November 16, 2007, to revive the above-identified application.

The petition is **GRANTED**.

The above-identified application became abandoned for failure to submit corrected drawings in a timely manner in reply to the Notice of Allowance mailed May 14, 2007, which set a statutory period for reply of three (3) months. Accordingly, by operation of law, the above-identified application became abandoned on August 15, 2007.

The petition satisfies the conditions for revival pursuant to the provisions of 37 CFR 1.137(b) in that (1) the reply in the form of corrected formal drawings; (2) the petition fee of $1,540; (3) the required statement of unintentional delay; and (4) a terminal disclaimer and fee as required by 37 CFR 1.137(d) have been received. Accordingly, the drawings are accepted as having been unintentionally delayed.

It is not apparent whether the person signing the statement of the unintentional delay was in a position to have firsthand knowledge of the facts and circumstances of the delay at issue. Nevertheless, such statement is being treated as having been made as the result of a reasonable inquiry into the facts and circumstances of such delay. See 37 CFR 10.18(b) and Changes to Patent Practice and Procedure; Final rule Notice, 62 Fed. Reg. 53131, 53178 (October 10, 1997), 1203 Off. Gaz. Pat. Office 63, 103 (October 21, 1997). In the event that such an inquiry has not been made, petitioner must make such an inquiry. If such inquiry results in the discovery that it is not correct that the entire delay in filing the required reply from the due date for the reply until the filing of a grantable petition pursuant of 37 CFR 1.137(b) was unintentional, petitioner must notify the Office.

The terminal disclaimer is accepted and has been made of record.

Telephone inquiries concerning this decision should be directed to Carl Friedman at (571) 272-6842.

The application file is being referred to the Office of Patent Publication.

David Bucci
Petitions Examiner
Office of Petitions

UNITED STATES PATENT AND TRADEMARK OFFICE

Commissioner for Patents
United States Patent and Trademark Office
P.O. Box 1450
Alexandria, VA 22313-1450

BLAKELY SOKOLOFF TAYLOR & ZAFMAN
1279 OAKMEAD PARKWAY
SUNNYVALE CA 94085-4040

COPY MAILED
APR 23 2008
OFFICE OF PETITIONS

In re Application of	:	
Jonathan Kaplan et al.	:	
Application No. 29/242,793	:	ON PETITION
Filed: November 14, 2005	:	
Attorney Docket No. 5710P011	:	

This is a decision on the petition under the unintentional provisions of 37 CFR 1.137(b), filed July 24, 2007, to revive the above-identified application.

The petition is **DISMISSED**.

Any request for reconsideration of this decision must be submitted within TWO (2) MONTHS from the mail date of this decision. Extensions of time under 37 CFR 1.136(a) are permitted. The reconsideration request should include a cover letter entitled "Renewed Petition under 37 CFR 1.137(b)." This is **not** a final agency action within the meaning of 5 U.S.C. § 704.

The application became abandoned for failure s to timely pay the issue fee on or before June 27, 2007, as required by the Notice of Allowance and Fee(s) Due mailed March 26, 2007, which set a statutory period for reply of three (3) months. Accordingly, the application became abandoned on June 27, 2007.

A grantable petition under 37 CFR 1.137(b) must be accompanied by: (1) the required reply, unless previously filed; (2) the petition fee as set forth in 37 CFR 1.17(m); (3) a statement that the entire delay in filing the required reply from the due date for the reply until the filing of a grantable petition pursuant to 37 CFR 1.137(b) was unintentional; and (4) any terminal disclaimer (and fee as set forth in 37 CFR 1.20(d)) required by 37 CFR 1.137(d). Where there is a question as to whether either the abandonment or the delay in filing a petition under 37 CFR 1.137 was unintentional, the Director may require additional information. See MPEP 711.03(c)(II)(C) and (D). The instant petition lacks item(s) (4).

37 CFR 1.137(d) requires a petition under 37 CFR 1.137(b) be accompanied by a terminal disclaimer (and fee), regardless of the period of abandonment in a design application.

Further correspondence with respect to this matter should be addressed as follows:

By Mail: Mail Stop PETITION
Commissioner for Patents
P. O. Box 1450
Alexandria, VA 22313-1450

By hand: U. S. Patent and Trademark Office
Customer Service Window, Mail Stop Petitions
Randolph Building
401 Dulany Street
Alexandria, VA 22314

The centralized facsimile number is **(571) 273-8300.**

Telephone inquiries concerning this decision should be directed to Terri Williams at (571) 272-2991.

Liana Walsh
Petitions Examiner
Office of Petitions

REQUEST FOR CONTINUED EXAMINATION (RCE) TRANSMITTAL

Address to:
Mail Stop RCE
Commissioner for Patents
P.O. 1450
Alexandria, VA 22313-1450

Application No.	29/242,793
Filing Date	November 14, 2005
First Named Inventor	Jonathan Kaplan
Art Unit	2913
Examiner Name	
Attorney Docket Number	5710P011

This is a Request for Continued Examination (RCE) under 37 CFR 1.114 of the above-identified application.
Request for Continued Examination (RCE) practice under 37 CFR § 1.114 does not apply to any utility or plant application filed prior to June 8, 1995, or to any design application.

1. **Submission required under 37 CFR 1.114** Note: If the RCE is proper, any previously filed unentered amendments and amendments enclosed with the RCE will be entered in the order in which they were filed unless applicant instructs otherwise. If applicant does not wish to have any previously filed unentered amendment(s) entered, applicant must request non-entry of such amendment(s).

   a. ☐ Previously submitted. If a final Office action is outstanding, any amendments filed after the final Office action may be considered as a submission even if this box is not checked.

      i. ☐ Consider the arguments in the Appeal Brief or Reply Brief previously filed on ____

      ii. ☐ Other _____

   b. ☒ Enclosed

      i. ☐ Amendment/Reply

      ii. ☐ Affidavit(s)/Declaration(s)

      iii. ☒ Information Disclosure Statement (IDS)

      iv. ☒ Other 4 cited non-patent references

2. **Miscellaneous**

   a. ☐ Suspension of action on the above-identified application is requested under 37 CFR 1.103(c) for a period of months. (Period of suspension shall not exceed 3 months; Fee under 37 CFR 1.17(i) required)

   b. ☐ Other _____

3. **Fees** The RCE fee under 37 CFR 1.17(e) is required by 37 CFR 1.114 when the RCE is filed.

   a. ☒ The Director is hereby authorized to charge the following fees, any underpayment of fees, or credit any overpayments, to Deposit Account No. 02-2666. I have enclosed a duplicate copy of this sheet.

      i. ☒ RCE fee required under 37 CFR 1.17(e)

      ii. ☐ Extension of time fee (37 CFR 1.136 and 1.17)

      iii. ☐ Other: RCE ($.00)

   b. ☐ Check in the amount of $790.00 enclosed

   c. ☐ Payment by credit card (Form PTO-2038 enclosed)

   WARNING: Information on this form may become public. Credit card information should not be included on this form. Provide credit card information and authorization on PTO-2038.

SIGNATURE OF APPLICANT, ATTORNEY, OR AGENT REQUIRED

Name *(Print/Type)*	Thomas S. Ferrill	*Registration No. (Attorney/Agent)*	42,532
Signature		Date	June 27, 2007

CERTIFICATE OF MAILING OR TRANSMISSION

I hereby certify that this correspondence is being submitted electronically via EFS Web on the date shown below.

June 27, 2007

Name *(Print/Type)*	Deborah A. McGovern		
Signature		Date	June 27, 2007

Based on PTO/SB/30 (04-05) as modified by Blakely, Sokoloff, Taylor & Zafman (rdc) 10/12/2005
SEND TO: Mail Stop RCE, Commissioner for Patents, P.O. Box 1450, Alexandria, VA 22313-1450

Adjustment date: 04/15/2008 CKHLOK
06/28/2007 INTEFSW 00002928 022666 29242793
01 FC:1801 790.00 CR

UNITED STATES PATENT & TRADEMARK OFFICE
Washington, D.C. 20231

REQUEST FOR PATENT FEE REFUND

1 Date of Request:	04/08/08	2 Serial/Patent #	29/242,793

	3 Please refund the following fee(s):	4 PAPER NUMBER	5 DATE FILED	6 AMOUNT
	Filing			$
	Amendment			$
	Extension of Time			$
	Notice of Appeal/Appeal			$
	Petition			$
	Issue			$
	Cert of Correction/Terminal Disc.			$
	Maintenance			$
	Assignment			$
X	Other RCE			$ 790.00

7 TOTAL AMOUNT OF REFUND: $ 790.00

8 TO BE REFUNDED BY:

- [ ] Treasury Check
- [ ] Credit Deposit A/C #:

9 0 2 -- 2 6 6 6

10 REASON:

- [ ] Overpayment
- [ ] Duplicate Payment
- [X] No Fee Due (Explanation):

RCE is not required in a design application.

11 REFUND REQUESTED BY:

TYPED/PRINTED NAME: Terri Williams TITLE: Paralegal Specialist

SIGNATURE: _____ PHONE: (571) 272-2991

OFFICE: Office of Petitions

****

THIS SPACE RESERVED FOR FINANCE USE ONLY:

APPROVED: _____ DATE: 4/15/08

Instructions for completion of this form appear on the back. After completion, attach white and yellow copies to the official file and mail or hand-carry to:

Office of Finance
Refund Branch
Crystal Park One, Room 802B

FORM PTO 1577
(01/90)

UNITED STATES PATENT AND TRADEMARK OFFICE

Commissioner for Patents
United States Patent and Trademark Office
P.O. Box 1450
Alexandria, VA 22313-1450
www.uspto.gov

Rutan & Tucker
611 Anton Blvd.
Suite 1400
Costa Mesa, CA 92626

COPY MAILED
NOV 25 2008

In re Application of	:	
Jonathan Kaplan, et al.	:	
Application No. 29/242,793	:	DECISION GRANTING PETITIONS
Filed: November 14, 2005	:	UNDER 37 CFR 1.137(b) AND
Attorney Docket No. 026515-0011P	:	37 CFR 1.313(c)(3)

This is a decision on the renewed petitions, filed May 21, 2008, under 37 CFR 1.137(b), to revive the above-identified unintentionally abandoned application and on the petition under 37 CFR 1.313(c)(3) to withdraw the above-identified application from issue.

The petitions are **GRANTED**.

As to the petition under 37 CFR 1.137(b):

This application became abandoned for failure to timely pay the issue fee on or before June 27, 2007, as required by the Notice of Allowance and Fee(s) Due, mailed March 27, 2007.

The petition satisfies the conditions for revival pursuant to the provisions of 37 CFR 1.137(b) in that petitioner has submitted (1) payment of the $800 issue fee, (2) the petition fee of $1,500, (3) an adequate statement of unintentional delay. 37 CFR 1.137(b)(3) requires a statement that "the entire delay in filing the required reply from the due date for the reply until the filing of a grantable petition pursuant to 37 CFR 1.137(b) was unintentional," and (4) a terminal disclaimer and fee as required by 37 CFR 1.137(d).

The terminal disclaimer is accepted and has been made of record.

As to the petition under 37 CFR 1.313(c)(3):

The above-identified application is hereby withdrawn from issue in favor of a continued prosecution application (CPA) under 37 CFR 1.53(d).

Petitioner is advised that the issue fee paid on July 24, 2007 in the parent application is not refundable nor can it be applied towards any new Notice of Allowance which may issue on the CPA filed July 24, 2007.

Telephone inquiries should be directed to Terri Williams at (571) 272-2991.

This matter is being referred to Technology Center AU 2916 for processing of the CPA and consideration of the concurrently filed information disclosure statement filed July 24, 2007.

Chris Bottorff
Petitions Examiner
Office of Petitions

UNITED STATES PATENT AND TRADEMARK OFFICE

Commissioner for Patents
United States Patent and Trademark Office
P.O. Box 1450
Alexandria, VA 22313-1450
www.uspto.gov

COPY MAILED
OCT 28 2008

STEVEN PATASCHER, PH. D.
14401 N. 10TH STREET
PHOENIX AZ 85022-4312

In re Application of :
Steven Patascher :
Application No. 29/242,838 : ON PETITION
Filed: November 15, 2005 :
For: BRIEFCASE/CARRYING CASE :

This is a decision on the petition under the unintentional provisions of 37 CFR 1.137(b), filed August 14, 2008, to revive the above-identified application.

The petition is **DISMISSED**.

Any request for reconsideration of this decision must be submitted within TWO (2) MONTHS from the mail date of this decision. Extensions of time under 37 CFR 1.136(a) are permitted. The reconsideration request should include a cover letter entitled "Renewed Petition under 37 CFR 1.137(b)." This is **not** a final agency action within the meaning of 5 U.S.C. § 704.

The application became abandoned for failure to reply in a timely manner to the Notice of Allowance/Notice of Allowability mailed November 24, 2006.

A grantable petition under 37 CFR 1.137(b) must be accompanied by: (1) the required reply, unless previously filed; (2) the petition fee as set forth in 37 CFR 1.17(m); (3) a statement that the entire delay in filing the required reply from the due date for the reply until the filing of a grantable petition pursuant to 37 CFR 1.137(b) was unintentional; and (4) any terminal disclaimer (and fee as set forth in 37 CFR 1.20(d)) required by 37 CFR 1.137(d). Where there is a question as to whether either the abandonment or the delay in filing a petition under 37 CFR 1.137 was unintentional, the Director may require additional information. See MPEP 711.03(c)(II)(C) and (D). The instant petition lacks item(s)(1).

The issue fee due at the time of filing the above petition was $410.00 and not the $400.00 submitted with the petition on August 14, 2008. No authorization was provided to charge any additional fees required. **Petitioner should be aware that the current issue fee for a design application at the small entity rate is $430.00.**

Further correspondence with respect to this matter should be addressed as follows:

By Mail:
Mail Stop PETITION
Commissioner for Patents
P. O. Box 1450
Alexandria, VA 22313-1450

By hand:
U. S. Patent and Trademark Office
Customer Service Window, Mail Stop Petitions
Randolph Building
401 Dulany Street
Alexandria, VA 22314

The centralized facsimile number is **(571) 273-8300.**

Telephone inquiries concerning this decision should be directed to the undersigned at (571) 272-3208.

Karen Creasy
Petitions Examiner
Office of Petitions

UNITED STATES PATENT AND TRADEMARK OFFICE

Commissioner for Patents
United States Patent and Trademark Office
P.O. Box 1450
Alexandria, VA 22313-1450
www.uspto.gov

STEVEN PATASCHERK, PH.D.
14401 N. 10TH STREET
PHOENIX AZ 85022-4312

COPY MAILED

NOV 19 2008

OFFICE OF PETITIONS

In re Application of	:	
Steven Patascher	:	
Application No. 29/242,838	:	DECISION ON PETITION
Filed: November 11, 2005	:	
For: BRIEFCASE/CARRYING CASE	:	

This is a decision on the renewed petition under the unintentional provisions of 37 CFR 1.137(b), filed November 7, 2008, to revive the above-identified application.

The petition is **GRANTED**.

The petition satisfies the conditions for revival pursuant to the provisions of 37 CFR 1.137(b) in that (1) the reply in the form of the issue fee; (2) the petition fee; and (3) the required statement of unintentional delay have been received. Accordingly, the reply to the Notice of Allowance mailed November 24, 2006, is accepted as having been unintentionally delayed.

The petition was only considered under the unintentional standard as was filed (petition and fee) on August 14, 2008.

Telephone inquiries concerning this decision should be directed to the undersigned at (571) 272-3208.

This application is being referred to the Office of Data Management to be processed into a patent and for review of the drawings submitted on August 14, 2008.

Karen Creasy

Karen Creasy
Petitions Examiner
Office of Petitions

UNITED STATES PATENT AND TRADEMARK OFFICE

COMMISSIONER FOR PATENTS
UNITED STATES PATENT AND TRADEMARK OFFICE
P.O. BOX 1450
ALEXANDRIA, VA 22313-1450
www.uspto.gov

KREMBLAS, FOSTER, PHILLIPS & POLLICK
7632 SLATE RIDGE BOULEVARD
REYNOLDSBURG, OH 43068

COPY MAILED

NOV 0 9 2006

OFFICE OF PETITIONS

In re Application of :
Graham C. Lowe :
Application No. 29/242,884 : ON PETITION
Filed: November 16, 2005 :
Attorney Docket No. LOWEX 101 DIV 1 :

This is a decision on the petition under 37 CFR 1.137(b), filed on September 11, 2006, to revive the above-identified application.

The petition is **DISMISSED**.

The above-identified application became abandoned for failure to timely respond to the Notice of Allowability mailed February 22, 2006. A Notice of Abandonment was mailed on July 20, 2006.

A grantable petition under 37 CFR 1.137(b) must be accompanied by: (1) the required reply, unless previously filed; (2) the petition fee as set forth in 37 CFR 1.17(m); (3) a statement that the entire delay in filing the required reply from the due date for the reply until the filing of a grantable petition pursuant to 37 CFR 1.137(b) was unintentional; and (4) any terminal disclaimer (and fee as set forth in 37 CFR 1.20(d)) required by 37 CFR 1.137(d). Where there is a question as to whether either the abandonment or the delay in filing a petition under 37 CFR 1.137 was unintentional, the Commissioner may require additional information. See MPEP 711.03(c)(III)(C) and (D). The instant petition lacks item(s) (4).

The Office acknowledges receipt of $750 for the instant petition, and three (3) sheets of formal drawings containing Figures 1-4 filed on September 11, 2006. The Office also acknowledges receipt of $400 for payment of the issue fee submitted on May 25, 2006. However, a Terminal Disclaimer and the $65 Terminal Disclaimer fee is required under 37 CFR 1.137(d) if the application is: (1) a design application, (2) a utility application filed before June 8, 1995, or (3) a plant application filed before June 8, 1995. The Terminal Disclaimer must dedicate to the public a terminal part of the term of any patent granted the application equivalent to the period of abandonment of the application, and must also apply to any patent granted on any application containing a specific reference under 35 U.S.C. 120, 121 or 365(c) to the application for which

revival is sought. Therefore, this application cannot be revived until a Terminal Disclaimer and $65 fee have been submitted.

Any request for reconsideration of this decision must be submitted within **TWO (2) MONTHS** from the mail date of this decision. Extensions of time under 37 CFR 1.136(a) are permitted. The reconsideration request should include a cover letter entitled "Renewed Petition under 37 CFR 1.137(b), and be accompanied by the required Terminal Disclaimer and $65 fee." This is **not** a final agency action within the meaning of 5 U.S.C. § 704.

Further correspondence with respect to this matter should be addressed as follows:

By Mail:
Mail Stop PETITION
Commissioner for Patents
P. O. Box 1450
Alexandria, VA 22313-1450

By hand:
U. S. Patent and Trademark Office
Customer Service Window, Mail Stop Petitions
Randolph Building
401 Dulany Street
Alexandria, VA 22314

The centralized facsimile number is **(571) 273-8300.**

Telephone inquiries concerning this decision should be directed to the undersigned at (571) 272-3226.

Andrea Smith
Petitions Examiner
Office of Petitions

UNITED STATES PATENT AND TRADEMARK OFFICE

Commissioner for Patents
United States Patent and Trademark Office
P.O. Box 1450
Alexandria, VA 22313-1450
www.uspto.gov

COPY MAILED

JUL 20 2007

OFFICE OF PETITIONS

KREMBLAS, FOSTER, PHILLIPS & POLLICK
7632 SLATE RIDGE BOULEVARD
REYNOLDSBURG, OH 43068

In re Application of :
Graham C. Lowe :
Application No. 29/242,884 : ON PETITION
Filed: November 16, 2005 :
Attorney Docket No. LOWEX 101 DIV 1 :

This is a decision on the renewed petition under 37 CFR 1.137(b), filed on November 20, 2006, to revive the above-identified application.

The petition now satisfies the requirements of 37 CFR 1.137(b), in that, petitioner has supplied the required terminal disclaimer and $65 fee. Therefore, the petition is **GRANTED**.

The terminal disclaimer under 37 CFR 1.137(d), filed November 20, 2006, has been accepted and made of record.

This application file is being referred to the Office of Publications for processing into a patent.

Telephone inquiries concerning this decision should be directed to the undersigned at (571) 272-3226.

Andrea Smith
Petitions Examiner
Office of Petitions

BEST AVAILABLE COPY

UNITED STATES PATENT AND TRADEMARK OFFICE

Commissioner for Patents
United States Patent and Trademark Office
P.O. Box 1450
Alexandria, VA 22313-1450
www.uspto.gov

Date : January 5, 2006

Patent No. : 7,093,200 B2
Inventor(s) : Schreiber, et al.
Issued : August 15, 2006
Title : **INSTANCE BROWSER FOR ONTOLOGY**
Docket No. : SVL920060522US1

Re: Request for Certificate of Correction

Consideration has been given your request for the issuance of a certificate of correction for the above-identified patent under the provisions of 37 CFR 1.322 and/or 1.323.

Assignees' names and addresses (assignment data) printed in a patent are based *solely* on information supplied in the appropriate space for identifying the assignment data, i.e., item 3 of the Fee(s) Transmittal Form PTOL-85B. After payment of the issue fee, correction of assignment data submitted on the PTOL-85B can only be done by Certificate of Correction under 37 CFR 1.323, with a request under 37 CFR 3.81(b).

A request for a patent to be corrected to state the name of the assignee must:

A. state that the assignment was submitted for recordation as set forth in 37 CFR 3.11 before issuance of the patent;
B. include a request for a certificate of correction under 37 CFR 1.323 along with the fee set forth in 37 CFR 1.20(a); and
C. include the processing fee set forth in 37 CFR 1.17(i).

If the request is granted, Certificates of Correction Branch will be notified that a Certificate of Correction may be issued.

See Manual of Patent Examining Procedure, Section 1481.01 (Rev. 3) (Oct. 2005).

Applicant has not included items A and or C above, accordingly, the request for Certificate of Correction to add or change the assignee data is denied.

Any request under 37 CFR 3.81(b) should be directed to the following address or facsimile number:

By mail: Mail Stop PETITIONS
Commissioner for Patents
Post Office Box 1450
Alexandria, VA 22313-1450

BEST AVAILABLE COPY

By hand: Customer Service Window
Mail Stop Petitions
Randolph Building
401 Dulany Street
Alexandria, VA 22314

By fax: 571-273-8300
ATTN: Office of Petitions

If a fee (currently $100) was previously submitted for consideration of a Request for Certificate of Correction, under CFR 1.323, to correct assignment data, no additional fee is required.

Elisha Evans
For Cecelia Newman
Decisions & Certificates
of Correction Branch
(703) 308-9390 or (703) 308-

DUKE W. YEE
P.O. BOX 802333
YEE & ASSOCIATES, P.C.
DALLAS TX 75380

CBN/eme

SPE RESPONSE FOR CERTIFICATE OF CORRECTION

7+

Paper No.: _____

DATE : January 5, 2007

TO SPE OF : ART UNIT 2914

SUBJECT : Request for Certificate of Correction for Appl. No.: 29/242917 Patent No.: D,531,192 S

Please respond to this request for a certificate of correction within 7 days.

Please review the requested changes/corrections as shown in the **COCIN** document(s) in the IFW application image. No new matter should be introduced, nor should the scope or meaning of the claims be changed.

Please complete the response (see below) and forward the completed response to scanning using document code **COCX**.

Elisha Evans

Certificates of Correction Branch

703-308-9390 ext. *110*

Thank You For Your Assistance

The request for issuing the above-identified correction(s) is hereby:

Note your decision on the appropriate box.

- ☑ **Approved** — **All** changes apply.
- ☐ **Approved in Part** — Specify below which changes **do not** apply.
- ☐ **Denied** — State the reasons for denial below.

Comments: _____

_____

_____

_____

_____

_____ 2914

SPE **Art Unit**

SPE RESPONSE FOR CERTIFICATE OF CORRECTION

Paper No.: _____

DATE : 3/20/09

TO SPE OF : ART UNIT 2913

SUBJECT : Request for Certificate of Correction for Appl. No.: 29242958 Patent No.: D568231 S

Please respond to this request for a certificate of correction within 7 days.

FOR IFW FILES:

Please review the requested changes/corrections as shown in the **COCIN** document(s) in the IFW application image. No new matter should be introduced, nor should the scope or meaning of the claims be changed.

Please complete the response (see below) and forward the completed response to scanning using document code **COCX**.

FOR PAPER FILES:

Please review the requested changes/corrections as shown in the attached certificate of correction. Please complete this form (see below) and forward it with the file to:

Certificates of Correction Branch (CofC)
South Tower - 9A22
Palm Location 7580
You can fax the Directors/SPE response to 571-270-9990

LAMONTE NEWSOME
Certificates of Correction Branch
703-308-9390 ext. 112

Thank You For Your Assistance

The request for issuing the above-identified correction(s) is hereby:
Note your decision on the appropriate box.

☒ **Approved**	**All** changes apply.
☐ **Approved in Part**	Specify below which changes **do not** apply.
☐ **Denied**	State the reasons for denial below.

Comments: _____

Caron D Veynar
CARON D. VEYNAR
SUPERVISORY PATENT EXAMINER 2913

PTO/SB/27 (05-03)
Approved for use through 04/30/2003. OMB 0651-0031
U.S. Patent and Trademark Office; U.S. DEPARTMENT OF COMMERCE
Under the Paperwork Reduction Act of 1995, no persons are required to respond to a collection of information unless it displays a valid OMB control number.

REQUEST FOR EXPEDITED EXAMINATION OF A DESIGN APPLICATION (37 CFR 1.155)

Application Number	TO BE ASSIGNED
Filing Date	November 18, 2005
First Named Inventor	Michael Hui
Title	Portion Of A Shoe Midsole
Atty Docket Number	015127.00609

112948 U.S.PTO
29/242969
111805

HAND DELIVER TO THE DESIGN GROUP DIRECTOR'S OFFICE
-or- ADDRESS TO:
MAIL STOP EXPEDITED DESIGN
COMMISSIONER FOR PATENTS
P.O. Box 1450
Alexandria, VA 22313-1450

Approved 2-1-06
Jacqueline M. Stone
Jacqueline M. Stone, Director
Technology Center 1700

This is a request for expedited examination of a design application under 37 CFR 1.155.

NOTE: If the Request made by this form accompanies original application papers, include form PTO/SB/18 "Design Patent Application Transmittal" or its equivalent.

A preexamination search was conducted. The field of search was:

D2/896, 902, 907, 908, 943, 944, 945, 946, 947, 961, 964, 967, 968, 969, 972, 973, 974 and 977

Related applications: _____

If not previously filed for the above-identified application, the following items required by 37 CFR 1.155 are enclosed:

Formal drawings (see 37 CFR 1.84).

The fee set forth in 37 CFR 1.17(k).

11/21/2005 STELMEL1 00000060 190733 29242969
04 FC:1802 900.00 DA

An information disclosure statement in compliance with 37 CFR 1.98.

November 18, 2005
Date

David R Gerk
Signature

202-824-3000
Telephone Number

David R. Gerk-Registration No. 56,901
Typed or printed name

WARNING: Information on this form may become public. Credit card information should not be included on this form. Provide credit card information and authorization on PTO-2038.

This collection of information is required by 37 CFR 1.155. The information is required to obtain or retain a benefit by the public which is to file (and by the USPTO to process) an application. Confidentiality is governed by 35 U.S.C. 122 and 37 CFR 1.14. This collection is estimated to take 6 minutes to complete, including gathering, preparing, and submitting the completed application form to the USPTO. Time will vary depending upon the individual case. Any comments on the amount of time you require to complete this form and/or suggestions for reducing this burden, should be sent to the Chief Information Officer, U.S. Patent and Trademark Office, U.S. Department of Commerce, P.O. Box 1450, Alexandria, VA 22313-1450. DO NOT SEND FEES OR COMPLETED FORMS TO THIS ADDRESS. SEND TO: Mail Stop Expedited Design, Commissioner for Patents, P.O. Box 1450, Alexandria, VA 22313-1450.

If you need assistance in completing the form, call 1-800-PTO-9199 and select option 2.

SPE RESPONSE FOR CERTIFICATE OF CORRECTION

Paper No.: _____

DATE : 11/24/07

TO SPE OF : ART UNIT 2915

SUBJECT : Request for Certificate of Correction for Appl. No.: **29/242971** Patent No.: **D551973**

Please respond to this request for a certificate of correction within 7 days.

Please review the requested changes/corrections as shown in the **COCIN** document(s) in the IFW application image. No new matter should be introduced, nor should the scope or meaning of the claims be changed.

Please complete the response (see below) and forward the completed response to scanning using document code **COCX**.

Angela Green
Certificates of Correction Branch
703.308.9380 ext. 123

Thank You For Your Assistance

The request for issuing the above-identified correction(s) is hereby:
Note your decision on the appropriate box.

- ☐ **Approved** — **All** changes apply.
- ☐ **Approved in Part** — Specify below which changes **do not** apply.
- ☑ **Denied** — State the reasons for denial below.

Comments: The request is denied because to change the Title to "Spray Nozzle of a Sprayer" would create inconsistencies with the claim and the figure descriptions. Further, a "Sprayer" has not been shown as part of the claimed subject matter of the design.

Gary D. Watson — SPE
2915 — Art Unit

UNITED STATES PATENT AND TRADEMARK OFFICE

Commissioner for Patents
United States Patent and Trademark Office
P.O. Box 1450
Alexandria, VA 22313-1450
www.uspto.gov

Date Mailed : February 27, 2008

Patent No. :D551973
Inventor :Hildebrand, George R.
Issued :November 2, 2007
Title :SPRAY NOZZLE

Re: Request for Certificate of Correction

Consideration has been given your request for the issuance of a certificate of correction for the above-identified patent under the provisions of Rule(s) 1.322.

Inspection of the application for the patent reveals that in connection with the alleged error pertaining to the Title of the Invention; the change "Spray Nozzle of a Sprayer" as the Title of the Invention would create inconsistencies with the claim and the figure descriptions. Further a "Sprayer" has not been shown as part of the claimed subject matter of the design. There being no fault on the part of the Patent and Trademark Office, it has no authority to a issue certificate of correction under the provisions of 35 U.S.C. 254 and Rule 322 of the Rules of Practice of the United States Patent and Trademark Office in Patent Cases.

In view of the foregoing applicants request in this matter is hereby denied.

In the case that applicant should disagree with decision, a request for reconsideration filed under 37 CFR 1.322 together with documentation in support of applicants request should be submitted. Required documentation may include acknowledgement of receipt.

Any telephone inquiry concerning this communication should be directed to Ms. A. Green at (703) 308-9380 ext. 123.

Cheryl L. Green

Mary Diggs, Supervisor
Decisions & Certificates
of Correction Branch
(703) 308-9390 or (703) 308-9380 ext. 123

Morgan & Finnegan, L.L.P
345 Park Avenue
New York, New York 10154

CBN/arg

UNITED STATES PATENT AND TRADEMARK OFFICE

Commissioner for Patents
United States Patent and Trademark Office
P.O. Box 1450
Alexandria, VA 22313-1450
www.uspto.gov

Dmitry Sendersky
Apt #703
2400 East 3rd Street
Brooklyn NY 11223

COPY MAILED
SEP 14 2007
OFFICE OF PETITIONS

In re Patent No. D533605 :
Issue Date: December 12, 2006 :
Application No. 29/242,982 : DECISION ON PETITION
Filed: November 17, 2005 :
Title. Playhouse :

This is a decision on the petition under 37 CFR 1.181 (no fee), filed March 28, 2007, requesting issuance of a duplicate Letters Patent for the above-identified patent.

The petition is **DISMISSED**.

Any request for reconsideration should be filed within **TWO MONTHS** of the mailing date of this decision in order to be considered timely. 37 CFR 1.181(f). This time period may not be extended pursuant to 37 CFR 1.136.

Petitioner states that the original Letters Patent was never received.

The Office follows the guidelines set forth in MPEP § 711.03(c) (*see also* "Withdrawing the Holding of Abandonment When Office Actions Are Not Received," 1156 Official Gazette 53 (November 16, 1993), which sets forth that, in the absence of any irregularity in the mailing of an Office action (in this case, the Letters Patent), there is a strong presumption that the Office action (Letters Patent) was properly mailed to practitioner at the address of record. This presumption may be overcome by a showing that the Letters Patent was not in fact received. In this regard, the showing required to establish the failure to receive the Letters Patent must consist of the following:

1. a statement from practitioner stating that the Letters Patent was not received by the practitioner;
2. a statement from the practitioner attesting to the fact that a search of the file jacket and docket records indicates that the Letters Patent was not received; and
3. a copy of the docket record where the nonreceived Letters Patent would have been entered had it been received must be attached to and referenced in the practitioner's statement.

The petition is not accompanied by the evidence required to establish nonreceipt of the original Letters Patent. In this regard, petitioner has not provided a copy of the docket records. As petitioner is a pro-se applicant, the Office understands that petitioner may not keep a formal docket record system for his correspondence. Nevertheless, petitioner must provide some sort of showing explaining the manner in which petitioner receives mail from the USPTO, maintains files for patent matters, and treats mail received for such matter. Specifically, petitioner must explain the system for keeping track of patent matters - where petitioner keeps the correspondence; where he writes down due dates; how he knows replies are due, etc. Petitioner should include any available documentary evidence of the mail received, covering a reasonable period after February 21, 2007, to demonstrate nonreceipt of the Letters Patent. Petitioner should also provide the USPTO with copies of any records or other methods, which could serve as a reminder of the due date for a response to an Office action, and where petitioner would have entered the receipt date of the Letters Patent had petitioner received it (for example, a copy of the outside of a file or a calendar maintained by petitioner), if these documents are available. Furthermore, petitioner must include a statement from himself, or any other person at the address who may have handled the Communication, indicating that a search was conducted of the location where the correspondence from the USPTO would have been kept; however, the Letters Patent was not found. Lastly, petitioner must state that he was, in fact, residing at the correspondence address of record for a reasonable time after February 21, 2007; the period when he would have received the Letters Patent.

The evidence submitted does not establish nonreceipt of the Letters Patent at that address.

In view of the above, the petition fails to provide the necessary evidence to establish nonreceipt of the Letters Patent. Accordingly, the petition for issuance of a duplicate Letters Patent under 37 CFR 1.181 cannot be granted at this time. .

If petitioner cannot submit the required evidence to establish nonreceipt of the original Letters Patent or simply does not wish to, petitioner may wish to consider filing a petition under 37 CFR 1.182 requesting issuance of a duplicate Letters Patent and pay the required fee of $400.

Further correspondence with respect to this matter should be addressed as follows:

By Mail: Mail Stop PETITION
Commissioner for Patents
P. O. Box 1450
Alexandria, VA 22313-1450

By facsimile: **(571) 273-8300**
Attn: Office of Petitions

By hand: U. S. Patent and Trademark Office

Customer Service Window, Mail Stop Petitions
Randolph Building
401 Dulany Street
Alexandria, VA 22314

Telephone inquiries concerning this decision should be directed to the undersigned at (571) 272-3215.

Charlema Grant
Petitions Attorney
Office of Petitions

UNITED STATES PATENT AND TRADEMARK OFFICE

Commissioner for Patents
United States Patent and Trademark Office
P.O. Box 1450
Alexandria, VA 22313-1450
www.uspto.gov

REED SMITH, LLP
SUITE 1400
3110 FAIRVIEW PARK DRIVE
FALLS CHURCH, VA 22042

COPY MAILED

JUL 18 2008

In re Patent No. D552,098	:	
Issue Date: October 2, 2007	:	
Application No. 29/242,995	:	ON PETITION
Filed: November 18, 2005	:	
Attorney Docket No. TSUT.0098	:	

This is a decision on the petition filed January 9, 2008, which is being treated as a request under 37 CFR 3.81(b)[1] to correct the name of the assignee on the front page of the above-identified patent by way of a Certificate of Correction.

The request is **GRANTED**.

Telephone inquiries concerning this decision may be directed to the April M. Wise at (571) 272-1642. Inquiries regarding the issuance of a certificate of correction should be directed to the Certificate of Correction Branch at (571) 272-4200.

The Certificates of Correction Branch will be notified of this decision granting the petition under 37 CFR 3.81(b) and directing issuance of the requested Certificate of Correction.

Carl Friedman
Petitions Examiner
Office of Petitions

[1] *See* MPEP 1309, subsection II; and Official Gazette of June 22, 2004.

UNITED STATES PATENT AND TRADEMARK OFFICE

Commissioner for Patents
United States Patent and Trademark Office
P.O. Box 1450
Alexandria, VA 22313-1450
www.uspto.gov

REED SMITH, LLP
SUITE 1400
3110 FAIRVIEW PARK DRIVE
FALLS CHURCH, VA 22042

COPY MAILED

JUL 18 2008

In re Patent No. D552,612 :
Issue Date: October 9, 2007 :
Application No. 29/242,996 : ON PETITION
Filed: November 18, 2005 :
Attorney Docket No. TSUT.0099 :

This is a decision on the petition filed January 9, 2008, which is being treated as a request under 37 CFR 3.81(b)[1] to correct the name of the assignee on the front page of the above-identified patent by way of a Certificate of Correction.

The request is **GRANTED**.

Telephone inquiries concerning this decision may be directed to the April M. Wise at (571) 272-1642. Inquiries regarding the issuance of a certificate of correction should be directed to the Certificate of Correction Branch at (571) 272-4200.

The Certificates of Correction Branch will be notified of this decision granting the petition under 37 CFR 3.81(b) and directing issuance of the requested Certificate of Correction.

Carl Friedman
Petitions Examiner
Office of Petitions

[1] *See* MPEP 1309, subsection II; and Official Gazette of June 22, 2004.

UNITED STATES PATENT AND TRADEMARK OFFICE

Commissioner for Patents
United States Patent and Trademark Office
P.O. Box 1450
Alexandria, VA 22313-1450
www.uspto.gov

REED SMITH, LLP
SUITE 1400
3110 FAIRVIEW PARK DRIVE
FALLS CHURCH, VA 22042

COPY MAILED

JUL 18 2008

In re Patent No. D552,099 :
Issue Date: October 2, 2007 :
Application No. 29/242,997 : ON PETITION
Filed: November 18, 2005 :
Attorney Docket No. TSUT.0100 :

This is a decision on the petition filed January 9, 2008, which is being treated as a request under 37 CFR 3.81(b)[1] to correct the name of the assignee on the front page of the above-identified patent by way of a Certificate of Correction.

The request is **GRANTED**.

Telephone inquiries concerning this decision may be directed to the April M. Wise at (571) 272-1642. Inquiries regarding the issuance of a certificate of correction should be directed to the Certificate of Correction Branch at (571) 272-4200.

The Certificates of Correction Branch will be notified of this decision granting the petition under 37 CFR 3.81(b) and directing issuance of the requested Certificate of Correction.

Carl Friedman
Petitions Examiner
Office of Petitions

[1] *See* MPEP 1309, subsection II; and Official Gazette of June 22, 2004.

UNITED STATES PATENT AND TRADEMARK OFFICE

Commissioner for Patents
United States Patent and Trademark Office
P.O. Box 1450
Alexandria, VA 22313-1450
www.uspto.gov

FISH & RICHARDSON P.C.
P.O. BOX 1022
MINNEAPOLIS MN 55440-1022

COPY MAILED

NOV 0 7 2008

OFFICE OF PETITIONS

In re Patent No. D534,705 :
Issued: January 2, 2007 :
Application No. 29/243,030 : ON PETITION
Filed: November 18, 2005 :
Attorney Docket No. 19108-005001 / 2005FDO-00 :

This is a decision on the petition under 37 CFR 1.182, filed April 15, 2008, requesting issuance of a duplicate Letters Patent for the above-identified application.

The petition is **GRANTED**.

The Publishing Division is directed to issue a duplicate Letters Patent.

Any questions concerning this matter may be directed to Joan Olszewski at 571-272-7751. Any questions concerning issuance of the duplicate Letters Patent should be directed to Niomi Farmer at (703) 308-9250, ext. 129.

A copy of this decision is being forwarded to Publishing Division for issuance of a duplicate Letters Patent.

/Liana Walsh/
Liana Walsh
Petitions Examiner
Office of Petitions

cc: Niomi Farmer, P/ODM, South Tower 8C23 (FAX 571-270-9753)

SPE RESPONSE FOR CERTIFICATE OF CORRECTION

Paper No.: X

DATE : November 14,2007

TO SPE OF : ART UNIT 2913

SUBJECT : Request for Certificate of Correction for Appl. No.: 29/243,050 Patent No.: D552164 S

A response is requested with respect to a request for a certificate of correction.

With respect to the change(s) requested to correct Office and/or Applicant's errors, should the patent read as shown in the certificate of correction attached herewith or the COCIN document(s), in IFW images for the above-identified patented application? No new matter should be introduced, nor should the scope or meaning of the claims be changed.

If the response is for an IFW, within 7 days, please complete and forward the response, to the employee (named below) via scanning into application images, using document code **COCX**.

DO NOT SENT TO ATTORNEY

If the response is for a paper file wrapper, please complete the response and forward the response with the paper file wrapper, to the employee (named below), within **7** days, to:

Certificates of Correction Branch (CofC)
South Tower - 9A22
Palm Location 7580

You can fax the Directors/SPE response to 571-270-9990

LAMONTE

NEWSOME

Certificates of Correction Branch

703-308-9390 ext. 112

Thank You For Your Assistance

The request for issuing the above-identified correction(s) is hereby:

Note your decision on the appropriate box.

- ☒ **Approved** — **All** changes apply.
- ☐ **Approved in Part** — Specify below which changes **do not** apply.
- ☐ **Denied** — State the reasons for denial below.

Comments: _____

Caron D Veynar

CARON D. VEYNAR
SUPERVISORY PATENT EXAMINER

SPE

2913
Art Unit

UNITED STATES PATENT AND TRADEMARK OFFICE

Commissioner for Patents
United States Patent and Trademark Office
P.O. Box 1450
Alexandria, VA 22313-1450
www.uspto.gov

Date : 11/15/07

Patent No. : D552164 S
Ser. No. : 29/243,050
Inventor(s) : KOUROKU, MORIYUKI
Issued : 10/02/07
Title : **TONER CARTRIDGE**
Docket No. : 05705/LH

Re: Request for Certificate of Correction

Consideration has been given your request for the issuance of a certificate of correction for the above-identified patent under the provisions of Rule(s) 1.322 and/or 1.323.

Assignees' names and addresses (assignment data) printed in a patent, are based *solely* on information supplied in the appropriate space for identifying the assignment data, i.e., item 3 of the Issue Fee Transmittal Form PTOL-85B. Granting of a request under 37 CFR 3.81(b) is required to correct applicant's error providing ***incorrect or erroneous*** assignment data, *before* issuance of a Certificate of Correction, under 37 CFR 1.323 *(see Manual of Patent Examining Procedures (M.P.E.P) Chp.1400, sect. 1481).* This procedure is required *at any time after the issue fee is paid*, including after issuance of the patent.

In view of the foregoing, your request, in this mater, is hereby denied.

A request to correct the Assignee under 37 CFR 3.81(b) should include:

A. **the processing fee set forth in 37 CFR 1.117(h) (currently $130);**
B. a statement that the failure to include the correct assignee name on the PTOL-85B was inadvertent; and
C. a copy of the Notice of Recordation of Assignment Document, reflecting the reel and frame number where the assignment(s) is recorded and/or reflecting proof of *the date* the assignment was submitted for recordation.

In the Request, Applicant(s) may request that the file be forwarded to Certificates of Correction Branch, for issuance of a Certificate of Correction, if the Request is granted.

Any request under 37 CFR 3.81(b) should be directed to the following address or facsimile number:

By mail: Mail Stop PETITIONS
Commissioner for Patents
Post Office Box 1450
Alexandria, VA 22313-1450

By hand: Customer Service Window
Mail Stop Petitions
Randolph Building
401 Dulany Street
Alexandria, VA 22314

By fax: (703) 872-9306
ATTN: Office of Petitions

If a fee (currently $100) was previously submitted for consideration of a Request for Certificate of Correction, under CFR 1.323, to correct assignment data, no additional fee is required.

Lamonte M. Newsome

Lamonte M. Newsome
For Cecelia Newman
Decisions & Certificates
of Correction Branch
(703) 308-9390 #112 or (703) 308-8309

FRISHAUF, HOLTZ, GOODMAN & CHICK, PC
220 Fifth Avenue
16TH Floor
NEW YORK NY 10001-7708

LMN

RECEIVED
CENTRAL FAX CENTER
OCT 16 2009

UNITED STATES PATENT AND TRADEMARK OFFICE

Commissioner for Patents
United States Patent and Trademark Office
P.O. Box 1450
Alexandria, VA 22313-1450
www.uspto.gov

Date : 11/15/07

Patent No. : D552164 S
Ser. No. : 29/243,050
Inventor(s) : KOUROKU, MORIYUKI
Issued : 10/02/07
Title : **TONER CARTRIDGE**
Docket No. : 05705/LH

Re: Request for Certificate of Correction

Consideration has been given your request for the issuance of a certificate of correction for the above-identified patent under the provisions of Rule(s) 1.322 and/or 1.323.

Assignees' names and addresses (assignment data) printed in a patent, are based *solely* on information supplied in the appropriate space for identifying the assignment data, i.e., item 3 of the Issue Fee Transmittal Form PTOL-85B. Granting of a request under 37 CFR 3.81(b) is required to correct applicant's error providing ***incorrect or erroneous*** assignment data, *before* issuance of a Certificate of Correction, under 37 CFR 1.323 *(see Manual of Patent Examining Procedures (M.P.E.P) Chp.1400, sect. 1481).* This procedure is required *at any time after the issue fee is paid*, including after issuance of the patent.

In view of the foregoing, your request, in this mater, is hereby denied.

A request to correct the Assignee under 37 CFR 3.81(b) should include:

A. **the processing fee set forth in 37 CFR 1.117(h) (currently $130);**
B. a statement that the failure to include the correct assignee name on the PTOL-85B was inadvertent; and
C. a copy of the Notice of Recordation of Assignment Document, reflecting the reel and frame number where the assignment(s) is recorded and/or reflecting proof of *the date* the assignment was submitted for recordation.

In the Request, Applicant(s) may request that the file be forwarded to Certificates of Correction Branch, for issuance of a Certificate of Correction, if the Request is granted.

Any request under 37 CFR 3.81(b) should be directed to the following address or facsimile number:

By mail: Mail Stop PETITIONS
Commissioner for Patents
Post Office Box 1450
Alexandria, VA 22313-1450

RECEIVED
CENTRAL FAX CENTER
OCT 16 2009

Attorney Docket No. 05705/LH

IN THE UNITED STATES PATENT AND TRADEMARK OFFICE

Inventor (s): M. KOUROKU, ET AL

Patent No. : D552164

Issued : October 2, 2007

Title : TONER CARTRIDGE

Customer No.: 01933

REQUEST TO CORRECT ASSIGNMENT INFORMATION UNDER 37 CFR 3.81(b)

Commissioner for Patents
Alexandria, VA 22313-1450

S I R :

CERTIFICATE OF FACSIMILE TRANSMISSION TO CENTRAL FAX

NO. 1-571-273-8300

TOTAL PAGES: 9

I hereby certify this paper is being facsimile transmitted to the Commissioner for Patents on the date noted below.

Sharon Portnoy

Dated: October 16, 2009

In the event that this Paper is late filed, and the necessary petition for extension of time is not filed concurrently herewith, please consider this as a Petition for the requisite extension of time, and to the extent not tendered by credit card (Form PTO-2038 attached hereto), authorization to charge the extension fee, or any other fee required in connection with this Paper, to Account No. 06-1378.

This is responsive to the communication dated November 15, 2007 (copy attached) from the USPTO.

It is respectfully requested that the assignment information for the above-identified patent be corrected as follows.

1. The USPTO listed only a partial name of the first-named Assignee. The full name of the first-named Assignee is:

   CASIO KEISANKI KABUSHIKI KAISHA
   d.b.a CASIO COMPUTER CO., LTD.

2. The second-named Assignee was inadvertently omitted from the PTOL-85 Form when the Issue Fee was paid. The name of the second-named is:

   CASIO DENSHIKOUGYOU KABUSHIKI KAISHA
   d.b.a. CASIO ELECTRONICS MANUFACTURING CO., LTD.
   Iruma-shi, JAPAN

10/19/2009 HMARZI1 00000001 29243050

01 FC:1464 130.00 OP

RECEIVED
CENTRAL FAX CENTER
OCT 16 2009

Patent No. D552,165
Customer No. 01933

In support of this request, enclosed is a copy of the NOTICE OF RECORDATION evidencing that the application was recorded on November 17, 2005 under Reel 017253, Frame 0217 and assigned to two Assignees.

The Certificate of Correction fee of $100.00 (under 37CFR 1.323) was previously submitted with the Request for Certificate of Correction filed October 25, 2007. A duplicate copy of our previously submitted Request for Certificate of Correction and a copy of the Certificate of Correction are enclosed.

Submitted herewith is a PTO-2038 form authorizing the charge of $130.00 for the Processing Fee under 37 CFR 1.117(h).

Authorization is also given to charge any additional fees which may be required to Deposit Account No. 06-1378.

It is respectfully requested that the file be forwarded to the Certificates of Correction Branch for issuance of a Certificate of Correction.

Respectfully submitted,

Leonard Holtz, Esq.
Reg. No. 22,974

Frishauf, Holtz, Goodman & Chick, P.C.
220 Fifth Avenue - 16th Floor
New York, New York 10001-7708
Tel. No. (212) 319-4900
Fax No. (212) 319-5101
LH:sp

PAGE 2/9 * RCVD AT 10/16/2009 12:53:34 PM [Eastern Daylight Time] * SVR:USPTO-EFXRF-6/33 * DNIS:2738300 * CSID:+1 212 319 5101 * DURATION (mm-ss):02-18

By hand: Customer Service Window
Mail Stop Petitions
Randolph Building
401 Dulany Street
Alexandria, VA 22314

By fax: (703) 872-9306
ATTN: Office of Petitions

If a fee (currently $100) was previously submitted for consideration of a Request for Certificate of Correction, under CFR 1.323, to correct assignment data, no additional fee is required.

Lamonte M. Newsome

Lamonte M. Newsome
For Cecelia Newman
Decisions & Certificates
of Correction Branch
(703) 308-9390 #112 or (703) 308-8309

FRISHAUF, HOLTZ, GOODMAN & CHICK, PC
220 Fifth Avenue
16TH Floor
NEW YORK NY 10001-7708

LMN

CORRECTED NOTICE

UNITED STATES PATENT AND TRADEMARK OFFICE

UNDER SECRETARY OF COMMERCE FOR INTELLECTUAL PROPERTY AND DIRECTOR OF THE UNITED STATES PATENT AND TRADEMARK OFFICE

RECEIVED
JUN 23 2006
FRISHAUF HOLTZ GOODMAN & CHICK, P.C.

JUNE 16, 2006

PTAS

FRISHAUF, HOLTZ, GOODMAN & CHICK, P.C
220 FIFTH AVENUE, 16TH FLOOR
NEW YORK, NEW YORK 10001-7708

UNITED STATES PATENT AND TRADEMARK OFFICE
NOTICE OF RECORDATION OF ASSIGNMENT DOCUMENT

THE ENCLOSED DOCUMENT HAS BEEN RECORDED BY THE ASSIGNMENT DIVISION OF THE U.S. PATENT AND TRADEMARK OFFICE. A COMPLETE MICROFILM COPY IS AVAILABLE AT THE ASSIGNMENT SEARCH ROOM ON THE REEL AND FRAME NUMBER REFERENCED BELOW.

PLEASE REVIEW ALL INFORMATION CONTAINED ON THIS NOTICE. THE INFORMATION CONTAINED ON THIS RECORDATION NOTICE REFLECTS THE DATA PRESENT IN THE PATENT AND TRADEMARK ASSIGNMENT SYSTEM. IF YOU SHOULD FIND ANY ERRORS OR HAVE QUESTIONS CONCERNING THIS NOTICE, YOU MAY CONTACT THE EMPLOYEE WHOSE NAME APPEARS ON THIS NOTICE AT 571-272-3350. PLEASE SEND REQUEST FOR CORRECTION TO: U.S. PATENT AND TRADEMARK OFFICE, MAIL STOP: ASSIGNMENT SERVICES BRANCH, P.O. BOX 1450, ALEXANDRIA, VA 22313.

RECORDATION DATE: 11/17/2005

REEL/FRAME: 017253/0217
NUMBER OF PAGES: 2

BRIEF: ASSIGNMENT OF ASSIGNOR'S INTEREST (SEE DOCUMENT FOR DETAILS).
DOCKET NUMBER: 05705/LH

ASSIGNOR:
KOUROKU, MORIYUKI

DOC DATE: 11/09/2005

ASSIGNOR:
TOSHIYUKI, HIROKAZU

DOC DATE: 11/09/2005

ASSIGNOR:
KANASUGI, MASAKI

DOC DATE: 11/09/2005

ASSIGNEE:
CASIO KEISANKI KABUSHIKI KAISHA,
D.B.A. CASIO COMPUTER CO., LTD.
6-2, HON-MACHI 1-CHOME, SHIBUYA-KU
TOKYO, JAPAN

017253/0217 PAGE 2

ASSIGNEE:
CASIO DENSHIKOUGYOU KABUSHIKI
KAISHA D.B.A. CASIO ELECTRONICS
MANUFACTURING CO., LTD.
4084, MIYADERA, IRUMA-SHI
SAITAMA, JAPAN

SERIAL NUMBER: 29243050
PATENT NUMBER:
TITLE: TONER CARTRIDGE

FILING DATE: 11/17/2005
ISSUE DATE:

DOROTHY WILLIAMS, PARALEGAL
ASSIGNMENT SERVICES BRANCH
PUBLIC RECORDS DIVISION

Attorney Docket No. 05705/LH

RECEIVED
CENTRAL FAX CENTER
OCT 16 2009

IN THE UNITED STATES PATENT AND TRADEMARK OFFICE

Applicant(s): Moriyuki KOUROKU, et al.

Patent No. : D552,164

Serial No. : 29/243,050

Filed : November 17, 2005

For : TONER CARTRIDGE

Art Unit : 2913

Examiner : Charles Garth Rademaker

CERTIFICATE OF MAILING

I hereby certify that this correspondence is being deposited with the United States Postal Service with sufficient postage as First Class mail in an envelope addressed to the Commissioner for Patents P.O. Box 1450 Alexandria, VA 22313-1450 on the date noted below.

Subrina Dookie

Subrina Dookie

Dated: October 25, 2007

In the event that this Paper is late filed, and the necessary petition for extension of time is not filed concurrently herewith, please consider this as a Petition for the requisite extension of time, and to the extent not tendered by form PTO-2038 attached hereto, authorization to charge the extension fee, or any other fee required in connection with this Paper, to Account No. 06-1378.

REQUEST FOR CERTIFICATE OF CORRECTION UNDER 37 CFR 1.323

Commissioner for Patents
P.O. Box 1450
Alexandria, VA 22313-1450

S I R :

It is respectfully requested that a Certificate of Correction, as per the attached, be granted. The error is an Applicant error, and correction is requested under 37 CFR 1.323.

Submitted herewith is a PTO-2038 form authorizing a charge of $100, to cover the USPTO Certificate of Correction fee (37 CFR 1.20 (a)).

Also enclosed is a copy of the Executed Assignment recorded on November 17, 2005.

Favorable action on this request for a Certificate of Correction is respectfully requested.

Frishauf, Holtz, Goodman
& Chick, P.C.
220 Fifth Avenue, 16th Floor
New York, NY 10001-7708
Tel. No. (212) 319-4900
LH:sd
encs.

Respectfully submitted,

Leonard Holtz
Reg. No. 22,974

PTO/SB/44 (08-07)
Approved for use through 08/31/2010. OMB 0651-0033
U.S. Patent and Trademark Office; U.S. DEPARTMENT OF COMMERCE
Under the Paperwork Reduction Act of 1995, no persons are required to respond to a collection of information unless it displays a valid OMB control number.
(Also Form PTO-1050)

UNITED STATES PATENT AND TRADEMARK OFFICE
CERTIFICATE OF CORRECTION

PATENT NO. : D552,164

APPLICATION NO.: 29/243,050

ISSUE DATE : October 2, 2007

INVENTOR(S) : Moriyuki KOUROKU et al

It is certified that an error appears or errors appear in the above-identified patent and that said Letters Patent is hereby corrected as shown below:

On the Title Page:

Under Item (73), Assignee:

insert –Casio Denshikougyou Kabushiki Kaisha d.b.a. Casio Electronics Manufacturing Co., Ltd.

Tokyo (JP).–

MAILING ADDRESS OF SENDER (Please do not use customer number below):

Frishauf Holtz Goodman & Chick P.C.
220 Fifth Avenue, 16th Floor
New York, NY 10001-7708

This collection of information is required by 37 CFR 1.322, 1.323, and 1.324. The information is required to obtain or retain a benefit by the public which is to file (and by the USPTO to process) an application. Confidentiality is governed by 35 U.S.C. 122 and 37 CFR 1.14. This collection is estimated to take 1.0 hour to complete, including gathering, preparing, and submitting the completed application form to the USPTO. Time will vary depending upon the individual case. Any comments on the amount of time you require to complete this form and/or suggestions for reducing this burden, should be sent to the Chief Information Officer, U.S. Patent and Trademark Office, U.S. Department of Commerce, P.O. Box 1450, Alexandria, VA 22313-1450. DO NOT SEND FEES OR COMPLETED FORMS TO THIS ADDRESS. **SEND TO: Attention Certificate of Corrections Branch, Commissioner for Patents, P.O. Box 1450, Alexandria, VA 22313-1450.**

If you need assistance in completing the form, call 1-800-PTO-9199 and select option 2.

UNITED STATES PATENT AND TRADEMARK OFFICE

Commissioner for Patents
United States Patent and Trademark Office
P.O. Box 1450
Alexandria, VA 22313-1450
www.uspto.gov

ROBERT A. PARSONS
4000 N. CENTRAL AVENUE, SUITE
1220
PHOENIX AZ 85012

In re Application of

Robert G. Murrieta

Application No. 29/243,164

Filing Date: November 21, 2005

COPY MAILED

MAY 0 9 2008

OFFICE OF PETITIONS

Attorney Docket No. 4758-D1

This is a decision on the petition under 37 CFR §1.137(b), November 21, 2007, in the above-identified application.

The petition is **dismissed.**

Any request for reconsideration of this decision must be submitted within TWO (2) MONTHS from the mail date of this decision. Extensions of time under 37 CFR 1.136(a) are permitted. The reconsideration request should include a cover letter entitled "Renewed Petition" under 37 CFR 1.137(b)."

This application became abandoned for failure to respond in a timely manner to the communication mailed October 24, 2006. The notice allowed a period for reply of one-month from its mailing date. No reply was received within the allowable period, and the application became abandoned on November 25, 2006. A Notice of Abandonment was mailed on March 21, 2007.

Effective December 1, 1997, the provisions of 37 CFR 1.137(b) now provide that where the delay in reply was unintentional, a petition may be filed to revive an abandoned application or a lapsed patent pursuant to 37 CFR 1.137(b). A grantable petition pursuant to 37 CFR 1.137(b) must be accompanied by:

(1) the required reply, unless previously filed. In a non-provisional application abandoned for failure to prosecute, the required reply may be met by the filing of a continuing application. In an application or patent, abandoned or lapsed for failure to pay the issue fee, or any portion thereof, the required reply must be the payment of the issue fee or any outstanding balance thereof.

(2) the petition fee as set forth in 37 CFR 1.17(m);

(3) a statement that the entire delay in filing the required reply from the due date for the reply until the filing of a grantable petition pursuant to 37 CFR 1.137(b) was unintentional. The Commissioner may require additional information where there is a question whether the delay was unintentional; and

(4) any terminal disclaimer (and fee set forth in 37 CFR 1.20(d)) required pursuant to 37 CFR 1.137(d).

The instant petition does not satisfy the requirements of item (4) above.

As to item (4), the terminal disclaimer was not found with the petition papers. The subject application is a design application, therefore; a terminal disclaimer is required in order to revive the application. Any renewed petition filed must be accompanied by the completed terminal disclaimer form, which is enclosed for petitioner's convenience. Pursuant to 37 CFR 1.137(d), the terminal disclaimer must dedicate to the public a terminal part of the term of any patent granted from this application that is equivalent to the period of abandonment of the application.

Further correspondence with respect to this matter should be addressed as follows:

By mail: Mail Stop Petitions
Commissioner for Patents
United States Patent and Trademark Office
Box 1450
Alexandria, VA 22313-1450

By facsimile: (571) 273-8300

Telephone inquiries concerning this matter may be directed to the undersigned at (571) 272-3222.

Kenya A. McLaughlin
Petitions Attorney
Office of Petitions

Enclosure: "Terminal Disclaimer to Accompany Petition"

PTO/SB/63 (01-08)
Approved for use through 05/31/2008. OMB 0651-0031
U.S. Patent and Trademark Office; U.S. DEPARTMENT OF COMMERCE
Under the Paperwork Reduction Act of 1995, no persons are required to a collection of information unless it displays a valid OMB control number.

TERMINAL DISCLAIMER TO ACCOMPANY PETITION	Docket Number (Optional)

In re Application of:

Name:

Application Number:

Filed:

For:

The owner*, _____ of _____ percent interest in the above-identified application hereby disclaims a terminal part of the term of any patent granted the above-identified application equivalent to: (1) if the above-identified application is a design application, the period of abandonment of the above-identified application, and (2) if the above-identified application is a utility or plant application, the lesser of: (a) the period of abandonment of the application; or (b) the period extending beyond twenty years from the date on which the above-identified application was filed in the United States or, if the application contains a specific reference to an earlier filed application(s) under 35 U.S.C. 120, 121, or 365(c), from the date on which the earliest such application was filed. This disclaimer also applies to any patent granted on a utility or plant application filed before June 8, 1995, or a design application, that contains a specific reference under 35 U.S.C. 120, 121, or 365(c) to the above-identified application. This disclaimer is binding upon the grantee, and its successors or assigns.

Check either box 1 or 2 below, if appropriate.

1. ☐ For submissions on behalf of an organization (e.g., corporation, partnership, university, government agency, etc.), the undersigned is empowered to act on behalf of the organization.

2. ☐ The undersigned is an attorney or agent of record. Registration Number_____.

_____ _____
Signature Date

_____ _____
Typed or Printed Name Telephone Number

☐ Terminal disclaimer fee under 37 CFR 1.20(d) included.

WARNING: Information on this form may become public. Credit card information should not be included on this form. Provide credit card information and authorization on PTO-2038.

* Statement under 37 CFR 3.73(b) is required if terminal disclaimer is signed by the assignee (owner). Form PTO/SB/96 may be used for making this certification. See MPEP § 324.

This collection of information is required by 37 CFR 1.137. The information is required to obtain or retain a benefit by the public which is to file (and by the USPTO to process) an application. Confidentiality is governed by 35 U.S.C. 122 and 37 CFR 1.11 and 1.14. This collection is estimated to take 12 minutes to complete, including gathering, preparing, and submitting the completed application form to the USPTO. Time will vary depending upon the individual case. Any comments on the amount of time you require to complete this form and/or suggestions for reducing this burden, should be sent to the Chief Information Officer, U.S. Patent and Trademark Office, U.S. Department of Commerce, P.O. Box 1450, Alexandria, VA 22313-1450. DO NOT SEND FEES OR COMPLETED FORMS TO THIS ADDRESS. **SEND TO: Commissioner for Patents, P.O. Box 1450, Alexandria, VA 22313-1450.**

If you need assistance in completing the form, call 1-800-PTO-9199 and select option 2.

Privacy Act Statement

The **Privacy Act of 1974 (P.L. 93-579)** requires that you be given certain information in connection with your submission of the attached form related to a patent application or patent. Accordingly, pursuant to the requirements of the Act, please be advised that: (1) the general authority for the collection of this information is 35 U.S.C. 2(b)(2); (2) furnishing of the information solicited is voluntary; and (3) the principal purpose for which the information is used by the U.S. Patent and Trademark Office is to process and/or examine your submission related to a patent application or patent. If you do not furnish the requested information, the U.S. Patent and Trademark Office may not be able to process and/or examine your submission, which may result in termination of proceedings or abandonment of the application or expiration of the patent.

The information provided by you in this form will be subject to the following routine uses:

1. The information on this form will be treated confidentially to the extent allowed under the Freedom of Information Act (5 U.S.C. 552) and the Privacy Act (5 U.S.C 552a). Records from this system of records may be disclosed to the Department of Justice to determine whether disclosure of these records is required by the Freedom of Information Act.
2. A record from this system of records may be disclosed, as a routine use, in the course of presenting evidence to a court, magistrate, or administrative tribunal, including disclosures to opposing counsel in the course of settlement negotiations.
3. A record in this system of records may be disclosed, as a routine use, to a Member of Congress submitting a request involving an individual, to whom the record pertains, when the individual has requested assistance from the Member with respect to the subject matter of the record.
4. A record in this system of records may be disclosed, as a routine use, to a contractor of the Agency having need for the information in order to perform a contract. Recipients of information shall be required to comply with the requirements of the Privacy Act of 1974, as amended, pursuant to 5 U.S.C. 552a(m).
5. A record related to an International Application filed under the Patent Cooperation Treaty in this system of records may be disclosed, as a routine use, to the International Bureau of the World Intellectual Property Organization, pursuant to the Patent Cooperation Treaty.
6. A record in this system of records may be disclosed, as a routine use, to another federal agency for purposes of National Security review (35 U.S.C. 181) and for review pursuant to the Atomic Energy Act (42 U.S.C. 218(c)).
7. A record from this system of records may be disclosed, as a routine use, to the Administrator, General Services, or his/her designee, during an inspection of records conducted by GSA as part of that agency's responsibility to recommend improvements in records management practices and programs, under authority of 44 U.S.C. 2904 and 2906. Such disclosure shall be made in accordance with the GSA regulations governing inspection of records for this purpose, and any other relevant (*i.e.*, GSA or Commerce) directive. Such disclosure shall not be used to make determinations about individuals.
8. A record from this system of records may be disclosed, as a routine use, to the public after either publication of the application pursuant to 35 U.S.C. 122(b) or issuance of a patent pursuant to 35 U.S.C. 151. Further, a record may be disclosed, subject to the limitations of 37 CFR 1.14, as a routine use, to the public if the record was filed in an application which became abandoned or in which the proceedings were terminated and which application is referenced by either a published application, an application open to public inspection or an issued patent.
9. A record from this system of records may be disclosed, as a routine use, to a Federal, State, or local law enforcement agency, if the USPTO becomes aware of a violation or potential violation of law or regulation.

UNITED STATES PATENT AND TRADEMARK OFFICE

Commissioner for Patents
United States Patent and Trademark Office
P.O. Box 1450
Alexandria, VA 22313-1450
www.uspto.gov

ROBERT A. PARSONS
4000 N. CENTRAL AVENUE, SUITE
1220
PHOENIX AZ 85012

In re Application of

Robert G. Murrieta

Application No. 29/243,164

Filing Date: November 21, 2005

Attorney Docket No. 4758-D1

COPY MAILED

AUG 0 1 2008

This is a decision on the renewed petition under 37 CFR §1.137(b), July 7, 2008, in the above-identified application.

The petition is **granted**.

This application became abandoned for failure to respond in a timely manner to the communication mailed October 24, 2006. The notice allowed a period for reply of one-month from its mailing date. No reply was received within the allowable period, and the application became abandoned on November 25, 2006. A Notice of Abandonment was mailed on March 21, 2007. A petition under 37 CFR 1.137(b) was first filed on November 21, 2007, and dismissed by a decision mailed May 9, 2008.

The terminal disclaimer filed July 7, 2008, is noted.

The response to the October 24, 2006, action, filed November 21, 2007, is also noted.

The application file is being directed to Technology Center, GAU 2912 for further processing.

Telephone inquiries concerning this decision may be directed to the undersigned at (571) 272-3222.

Kenya A. McLaughlin
Petitions Attorney
Office of Petitions

PTO/SB/27 (05-03)
Approved for use through 04/30/2003. OMB 0651-0031
U.S. Patent and Trademark Office; U.S. DEPARTMENT OF COMMERCE
Under the Paperwork Reduction Act of 1995, no persons are required to respond to a collection of information unless it displays a valid OMB control number.

REQUEST FOR EXPEDITED EXAMINATION OF A DESIGN APPLICATION (37 CFR 1.155)

Application Number	TO BE ASSIGNED
Filing Date	November 22 2005
First Named Inventor	Carl L. Madore
Title	Portion Of A Golf Club Head
Atty Docket Number	015127.00603

13000 U.S.PTO 29/243166 112205

HAND DELIVER TO THE DESIGN GROUP DIRECTOR'S OFFICE
-or- ADDRESS TO:
MAIL STOP EXPEDITED DESIGN
COMMISSIONER FOR PATENTS
P.O. Box 1450
Alexandria, VA 22313-1450

This is a request for expedited examination of a design application under 37 CFR 1.155.

NOTE: If the Request made by this form accompanies original application papers, include form PTO/SB/18 "Design Patent Application Transmittal" or its equivalent.

A preexamination search was conducted. The field of search was:

D21/733, 752, 753, 759

473/324, 325, 326, 327, 328, 329, 330, 331, 343, 344, 345, 346

Related applications: _____

If not previously filed for the above-identified application, the following items required by 37 CFR 1.155 are enclosed:

Formal drawings (see 37 CFR 1.84).

The fee set forth in 37 CFR 1.17(k).

An information disclosure statement in compliance with 37 CFR 1.98.

12/15/05
Approved
Jacqueline M. Stone
Jacqueline M. Stone, Director
Technology Center 1700

November 22, 2005
Date

Signature

202-824-3000
Telephone Number

David R. Gerk-Registration No. 56,901
Typed or printed name

WARNING: Information on this form may become public. Credit card information should not be included on this form. Provide credit card information and authorization on PTO-2038.

This collection of information is required by 37 CFR 1.155. The information is required to obtain or retain a benefit by the public which is to file (and by the USPTO to process) an application. Confidentiality is governed by 35 U.S.C. 122 and 37 CFR 1.14. This collection is estimated to take 6 minutes to complete, including gathering, preparing, and submitting the completed application form to the USPTO. Time will vary depending upon the individual case. Any comments on the amount of time you require to complete this form and/or suggestions for reducing this burden, should be sent to the Chief Information Officer, U.S. Patent and Trademark Office, U.S. Department of Commerce, P.O. Box 1450, Alexandria, VA 22313-1450. DO NOT SEND FEES OR COMPLETED FORMS TO THIS ADDRESS. SEND TO: Mail Stop Expedited Design, Commissioner for Patents, P.O. Box 1450, Alexandria, VA 22313-1450.

If you need assistance in completing the form, call 1-800-PTO-9199 and select option 2.

11/23/2005 LWONDIM1 00000062 190733 29243166
04 FC:1802 900.00 DA

PTO/SB/27 (05-03)
Approved for use through 04/30/2003. OMB 0651-0031
U.S. Patent and Trademark Office; U.S. DEPARTMENT OF COMMERCE
Under the Paperwork Reduction Act of 1995, no persons are required to respond to a collection of information unless it displays a valid OMB control number.

REQUEST FOR EXPEDITED EXAMINATION OF A DESIGN APPLICATION (37 CFR 1.155)

Application Number	TO BE ASSIGNED
Filing Date	November 22 2005
First Named Inventor	Carl L. Madore
Title	Portion Of A Golf Club Head
Atty Docket Number	015127.00601

113000 U.S.PTO
29/243167
112205

HAND DELIVER TO THE DESIGN GROUP DIRECTOR'S OFFICE
-or- ADDRESS TO:
MAIL STOP EXPEDITED DESIGN
COMMISSIONER FOR PATENTS
P.O. Box 1450
Alexandria, VA 22313-1450

This is a request for expedited examination of a design application under 37 CFR 1.155.

NOTE: If the Request made by this form accompanies original application papers, include form PTO/SB/18 "Design Patent Application Transmittal" or its equivalent.

A preexamination search was conducted. The field of search was:

D21/733, 752, 753, 759

473/324, 325, 326, 327, 328, 329, 330, 331, 343, 344, 345, 346

Related applications: _____

If not previously filed for the above-identified application, the following items required by 37 CFR 1.155 are enclosed:

Formal drawings (see 37 CFR 1.84).

The fee set forth in 37 CFR 1.17(k).

An information disclosure statement in compliance with 37 CFR 1.98.

12/15/05
Approved
Jacqueline M. Stone
Jacqueline M. Stone, Director
Technology Center 1700

November 22, 2005
Date

Signature

202-824-3000
Telephone Number

David R. Gerk-Registration No. 56,901
Typed or printed name

WARNING: Information on this form may become public. Credit card information should not be included on this form. Provide credit card information and authorization on PTO-2038.

This collection of information is required by 37 CFR 1.155. The information is required to obtain or retain a benefit by the public which is to file (and by the USPTO to process) an application. Confidentiality is governed by 35 U.S.C. 122 and 37 CFR 1.14. This collection is estimated to take 6 minutes to complete, including gathering, preparing, and submitting the completed application form to the USPTO. Time will vary depending upon the individual case. Any comments on the amount of time you require to complete this form and/or suggestions for reducing this burden, should be sent to the Chief Information Officer, U.S. Patent and Trademark Office, U.S. Department of Commerce, P.O. Box 1450, Alexandria, VA 22313-1450. DO NOT SEND FEES OR COMPLETED FORMS TO THIS ADDRESS. SEND TO: Mail Stop Expedited Design, Commissioner for Patents, P.O. Box 1450, Alexandria, VA 22313-1450.

If you need assistance in completing the form, call 1-800-PTO-9199 and select option 2.

11/23/2005 LWONDIM1 00000063 190733 29243167
04 FC:1802 900.00 DA

PTO/SB/27 (05-03)
Approved for use through 04/30/2003. OMB 0651-0031
U.S. Patent and Trademark Office; U.S. DEPARTMENT OF COMMERCE
Under the Paperwork Reduction Act of 1995, no persons are required to respond to a collection of information unless it displays a valid OMB control number.

REQUEST FOR EXPEDITED EXAMINATION OF A DESIGN APPLICATION (37 CFR 1.155)

Application Number	TO BE ASSIGNED
Filing Date	November 22 2005
First Named Inventor	Carl L. Madore
Title	Portion Of A Golf Club Head
Atty Docket Number	015127.00602

11/23/2005 LWONDIM1 00000064 190733 29243168
04 FC:1802 900.00 DA

HAND DELIVER TO THE DESIGN GROUP DIRECTOR'S OFFICE
-or- ADDRESS TO:
MAIL STOP EXPEDITED DESIGN
COMMISSIONER FOR PATENTS
P.O. Box 1450
Alexandria, VA 22313-1450

This is a request for expedited examination of a design application under 37 CFR 1.155.

NOTE: If the Request made by this form accompanies original application papers, include form PTO/SB/18 "Design Patent Application Transmittal" or its equivalent.

A preexamination search was conducted. The field of search was:

D21/733, 752, 753, 759

473/324, 325, 326, 327, 328, 329, 330, 331, 343, 344, 345, 346

Related applications: _____

If not previously filed for the above-identified application, the following items required by 37 CFR 1.155 are enclosed:

Formal drawings (see 37 CFR 1.84).

The fee set forth in 37 CFR 1.17(k).

An information disclosure statement in compliance with 37 CFR 1.98.

Approved
12/15/05
Jacqueline M. Stone
Jacqueline M. Stone, Director
Technology Center 1700

November 22, 2005
Date

Signature

202-824-3000
Telephone Number

David R. Gerk-Registration No. 56,901
Typed or printed name

WARNING: Information on this form may become public. Credit card information should not be included on this form. Provide credit card information and authorization on PTO-2038.

This collection of information is required by 37 CFR 1.155. The information is required to obtain or retain a benefit by the public which is to file (and by the USPTO to process) an application. Confidentiality is governed by 35 U.S.C. 122 and 37 CFR 1.14. This collection is estimated to take 6 minutes to complete, including gathering, preparing, and submitting the completed application form to the USPTO. Time will vary depending upon the individual case. Any comments on the amount of time you require to complete this form and/or suggestions for reducing this burden, should be sent to the Chief Information Officer, U.S. Patent and Trademark Office, U.S. Department of Commerce, P.O. Box 1450, Alexandria, VA 22313-1450. DO NOT SEND FEES OR COMPLETED FORMS TO THIS ADDRESS. SEND TO: Mail Stop Expedited Design, Commissioner for Patents, P.O. Box 1450, Alexandria, VA 22313-1450.

If you need assistance in completing the form, call 1-800-PTO-9199 and select option 2.

PTO/SB/27 (05-03)
Approved for use through 04/30/2003. OMB 0651-0031
U.S. Patent and Trademark Office; U.S. DEPARTMENT OF COMMERCE
Under the Paperwork Reduction Act of 1995, no persons are required to respond to a collection of information unless it displays a valid OMB control number.

REQUEST FOR EXPEDITED EXAMINATION OF A DESIGN APPLICATION (37 CFR 1.155)

Application Number	TO BE ASSIGNED
Filing Date	November 22 2005
First Named Inventor	Carl L. Madore
Title	Portion Of A Golf Club Head
Atty Docket Number	015127.00522

113000 U.S.PTO
29/243169
112205

HAND DELIVER TO THE DESIGN GROUP DIRECTOR'S OFFICE
-or- ADDRESS TO:
MAIL STOP EXPEDITED DESIGN
COMMISSIONER FOR PATENTS
P.O. Box 1450
Alexandria, VA 22313-1450

This is a request for expedited examination of a design application under 37 CFR 1.155.

NOTE: If the Request made by this form accompanies original application papers, include form PTO/SB/18 "Design Patent Application Transmittal" or its equivalent.

A preexamination search was conducted. The field of search was:

D21/733, 752

473/324, 325, 326, 327, 328, 329, 330, 331, 343, 344, 345, 346

Related applications: _____

If not previously filed for the above-identified application, the following items required by 37 CFR 1.155 are enclosed:

Formal drawings (see 37 CFR 1.84).

The fee set forth in 37 CFR 1.17(k).

An information disclosure statement in compliance with 37 CFR 1.98.

12/15/05
Approved
Jacqueline M. Stone
Jacqueline M. Stone, Director
Technology Center 1700

November 22, 2005
Date

David R Gerk
Signature

202-824-3000
Telephone Number

David R. Gerk-Registration No. 56,901
Typed or printed name

WARNING: Information on this form may become public. Credit card information should not be included on this form. Provide credit card information and authorization on PTO-2038.

This collection of information is required by 37 CFR 1.155. The information is required to obtain or retain a benefit by the public which is to file (and by the USPTO to process) an application. Confidentiality is governed by 35 U.S.C. 122 and 37 CFR 1.14. This collection is estimated to take 6 minutes to complete, including gathering, preparing, and submitting the completed application form to the USPTO. Time will vary depending upon the individual case. Any comments on the amount of time you require to complete this form and/or suggestions for reducing this burden, should be sent to the Chief Information Officer, U.S. Patent and Trademark Office, U.S. Department of Commerce, P.O. Box 1450, Alexandria, VA 22313-1450. DO NOT SEND FEES OR COMPLETED FORMS TO THIS ADDRESS. SEND TO: Mail Stop Expedited Design, Commissioner for Patents, P.O. Box 1450, Alexandria, VA 22313-1450.

If you need assistance in completing the form, call 1-800-PTO-9199 and select option 2.

11/25/2005 LWONDIM1 00000001 190733 29243169
04 FC:1802 900.00 DA

PTO/SB/27 (05-03)
Approved for use through 04/30/2003. OMB 0651-0031
U.S. Patent and Trademark Office; U.S. DEPARTMENT OF COMMERCE
Under the Paperwork Reduction Act of 1995, no persons are required to respond to a collection of information unless it displays a valid OMB control number.

REQUEST FOR EXPEDITED EXAMINATION OF A DESIGN APPLICATION (37 CFR 1.155)

Application Number	TO BE ASSIGNED
Filing Date	November 22 2005
First Named Inventor	Carl L. Madore
Title	Portion Of A Golf Club Head
Atty Docket Number	015127.00523

13000 U.S.PTO 29/243170 112205

HAND DELIVER TO THE DESIGN GROUP DIRECTOR'S OFFICE
-or- ADDRESS TO:
MAIL STOP EXPEDITED DESIGN
COMMISSIONER FOR PATENTS
P.O. Box 1450
Alexandria, VA 22313-1450

This is a request for expedited examination of a design application under 37 CFR 1.155.

NOTE: If the Request made by this form accompanies original application papers, include form PTO/SB/18 "Design Patent Application Transmittal" or its equivalent.

A preexamination search was conducted. The field of search was:

D21/733, 752

473/324, 325, 326, 327, 328, 329, 330, 331, 343, 344, 345, 346

Related applications: _____

If not previously filed for the above-identified application, the following items required by 37 CFR 1.155 are enclosed:

Formal drawings (see 37 CFR 1.84).

The fee set forth in 37 CFR 1.17(k).

An information disclosure statement in compliance with 37 CFR 1.98.

12/5/05

Approved
Jacqueline M. Stone
Jacqueline M. Stone, Director
Technology Center 1700

November 22, 2005
Date

Signature

202-824-3000
Telephone Number

David R. Gerk-Registration No. 56,901
Typed or printed name

WARNING: Information on this form may become public. Credit card information should not be included on this form. Provide credit card information and authorization on PTO-2038.

This collection of information is required by 37 CFR 1.155. The information is required to obtain or retain a benefit by the public which is to file (and by the USPTO to process) an application. Confidentiality is governed by 35 U.S.C. 122 and 37 CFR 1.14. This collection is estimated to take 6 minutes to complete, including gathering, preparing, and submitting the completed application form to the USPTO. Time will vary depending upon the individual case. Any comments on the amount of time you require to complete this form and/or suggestions for reducing this burden, should be sent to the Chief Information Officer, U.S. Patent and Trademark Office, U.S. Department of Commerce, P.O. Box 1450, Alexandria, VA 22313-1450. DO NOT SEND FEES OR COMPLETED FORMS TO THIS ADDRESS. **SEND TO: Mail Stop Expedited Design, Commissioner for Patents, P.O. Box 1450, Alexandria, VA 22313-1450.**

If you need assistance in completing the form, call 1-800-PTO-9199 and select option 2.

11/25/2005 LWONDIM1 00000002 190733 29243170
04 FC:1802 900.00 DA

PTO/SB/27 (05-03)
Approved for use through 04/30/2003. OMB 0651-0031
U.S. Patent and Trademark Office; U.S. DEPARTMENT OF COMMERCE
Under the Paperwork Reduction Act of 1995, no persons are required to respond to a collection of information unless it displays a valid OMB control number.

REQUEST FOR EXPEDITED EXAMINATION OF A DESIGN APPLICATION (37 CFR 1.155)

Application Number	TO BE ASSIGNED
Filing Date	November 22 2005
First Named Inventor	Carl L. Madore
Title	Portion Of A Golf Club Head
Atty Docket Number	015127.00524

113000 U.S.PTO
29/243171
112205

HAND DELIVER TO THE DESIGN GROUP DIRECTOR'S OFFICE
-or- ADDRESS TO:
MAIL STOP EXPEDITED DESIGN
COMMISSIONER FOR PATENTS
P.O. Box 1450
Alexandria, VA 22313-1450

This is a request for expedited examination of a design application under 37 CFR 1.155.

NOTE: If the Request made by this form accompanies original application papers, include form PTO/SB/18 "Design Patent Application Transmittal" or its equivalent.

A preexamination search was conducted. The field of search was:

D21/733, 752

473/324, 325, 326, 327, 328, 329, 330, 331, 343, 344, 345, 346

Related applications: ____

If not previously filed for the above-identified application, the following items required by 37 CFR 1.155 are enclosed:

Formal drawings (see 37 CFR 1.84).

The fee set forth in 37 CFR 1.17(k).

An information disclosure statement in compliance with 37 CFR 1.98.

12/15/05

Approved
Jacqueline M. Stone
Jacqueline M. Stone, Director
Technology Center 1700

November 22, 2005
Date

Signature

202-824-3000
Telephone Number

David R. Gerk-Registration No. 56,901
Typed or printed name

WARNING: Information on this form may become public. Credit card information should not be included on this form. Provide credit card information and authorization on PTO-2038.

This collection of information is required by 37 CFR 1.155. The information is required to obtain or retain a benefit by the public which is to file (and by the USPTO to process) an application. Confidentiality is governed by 35 U.S.C. 122 and 37 CFR 1.14. This collection is estimated to take 6 minutes to complete, including gathering, preparing, and submitting the completed application form to the USPTO. Time will vary depending upon the individual case. Any comments on the amount of time you require to complete this form and/or suggestions for reducing this burden, should be sent to the Chief Information Officer, U.S. Patent and Trademark Office, U.S. Department of Commerce, P.O. Box 1450, Alexandria, VA 22313-1450. DO NOT SEND FEES OR COMPLETED FORMS TO THIS ADDRESS. **SEND TO: Mail Stop Expedited Design, Commissioner for Patents, P.O. Box 1450, Alexandria, VA 22313-1450.**

If you need assistance in completing the form, call 1-800-PTO-9199 and select option 2.

11/25/2005 LWONDIM1 00000003 190733 29243171
04 FC:1802 900.00 DA

PTO/SB/27 (05-03)
Approved for use through 04/30/2003. OMB 0651-0031
U.S. Patent and Trademark Office; U.S. DEPARTMENT OF COMMERCE
Under the Paperwork Reduction Act of 1995, no persons are required to respond to a collection of information unless it displays a valid OMB control number.

REQUEST FOR EXPEDITED EXAMINATION OF A DESIGN APPLICATION (37 CFR 1.155)

Application Number	TO BE ASSIGNED
Filing Date	November 22 2005
First Named Inventor	Carl L. Madore
Title	Portion Of A Golf Club Head
Atty Docket Number	015127.00525

113000 U.S.PTO
29/243172
112205

HAND DELIVER TO THE DESIGN GROUP DIRECTOR'S OFFICE
-or- ADDRESS TO:
MAIL STOP EXPEDITED DESIGN
COMMISSIONER FOR PATENTS
P.O. Box 1450
Alexandria, VA 22313-1450

This is a request for expedited examination of a design application under 37 CFR 1.155.

NOTE: If the Request made by this form accompanies original application papers, include form PTO/SB/18 "Design Patent Application Transmittal" or its equivalent.

A preexamination search was conducted. The field of search was:

D21/733, 752

473/324, 325, 326, 327, 328, 329, 330, 331, 343, 344, 345, 348

Related applications: ____

If not previously filed for the above-identified application, the following items required by 37 CFR 1.155 are enclosed:

Formal drawings (see 37 CFR 1.84).

The fee set forth in 37 CFR 1.17(k).

An information disclosure statement in compliance with 37 CFR 1.98.

12/15/05

Approved
Jacqueline M. Stone
Jacqueline M. Stone, Director
Technology Center 1700

November 22, 2005
Date

David R. Gerk
Signature

202-824-3000
Telephone Number

David R. Gerk-Registration No. 56,901
Typed or printed name

WARNING: Information on this form may become public. Credit card information should not be included on this form. Provide credit card information and authorization on PTO-2038.

This collection of information is required by 37 CFR 1.155. The information is required to obtain or retain a benefit by the public which is to file (and by the USPTO to process) an application. Confidentiality is governed by 35 U.S.C. 122 and 37 CFR 1.14. This collection is estimated to take 6 minutes to complete, including gathering, preparing, and submitting the completed application form to the USPTO. Time will vary depending upon the individual case. Any comments on the amount of time you require to complete this form and/or suggestions for reducing this burden, should be sent to the Chief Information Officer, U.S. Patent and Trademark Office, U.S. Department of Commerce, P.O. Box 1450, Alexandria, VA 22313-1450. DO NOT SEND FEES OR COMPLETED FORMS TO THIS ADDRESS. SEND TO: Mail Stop Expedited Design, Commissioner for Patents, P.O. Box 1450, Alexandria, VA 22313-1450.

If you need assistance in completing the form, call 1-800-PTO-9199 and select option 2.

11/25/2005 LWONDIM1 00000004 190733 29243172
04 FC:1802 900.00 DA

PTO/SB/27 (05-03)
Approved for use through 04/30/2003. OMB 0651-0031
U.S. Patent and Trademark Office; U.S. DEPARTMENT OF COMMERCE
Under the Paperwork Reduction Act of 1995, no persons are required to respond to a collection of information unless it displays a valid OMB control number.

REQUEST FOR EXPEDITED EXAMINATION OF A DESIGN APPLICATION (37 CFR 1.155)

Application Number	TO BE ASSIGNED
Filing Date	November 22 2005
First Named Inventor	Carl L. Madore
Title	Portion Of A Golf Club Head
Atty Docket Number	015127.00526

13000 U.S.PTO 29/243,173 112205

HAND DELIVER TO THE DESIGN GROUP DIRECTOR'S OFFICE
-or- ADDRESS TO:
MAIL STOP EXPEDITED DESIGN
COMMISSIONER FOR PATENTS
P.O. Box 1450
Alexandria, VA 22313-1450

This is a request for expedited examination of a design application under 37 CFR 1.155.

NOTE: If the Request made by this form accompanies original application papers, include form PTO/SB/18 "Design Patent Application Transmittal" or its equivalent.

A preexamination search was conducted. The field of search was:

D21/733, 752

473/324, 325, 326, 327, 328, 329, 330, 331, 343, 344, 345, 346

Related applications: ____

If not previously filed for the above-identified application, the following items required by 37 CFR 1.155 are enclosed:

Formal drawings (see 37 CFR 1.84).

The fee set forth in 37 CFR 1.17(k).

An information disclosure statement in compliance with 37 CFR 1.98.

12/15/05
Approved
Jacqueline M. Stone
Jacqueline M. Stone, Director
Technology Center 1700

November 22, 2005
Date

Signature

202-824-3000
Telephone Number

David R. Gerk-Registration No. 56,901
Typed or printed name

WARNING: Information on this form may become public. Credit card information should not be included on this form. Provide credit card information and authorization on PTO-2038.

This collection of information is required by 37 CFR 1.155. The information is required to obtain or retain a benefit by the public which is to file (and by the USPTO to process) an application. Confidentiality is governed by 35 U.S.C. 122 and 37 CFR 1.14. This collection is estimated to take 6 minutes to complete, including gathering, preparing, and submitting the completed application form to the USPTO. Time will vary depending upon the individual case. Any comments on the amount of time you require to complete this form and/or suggestions for reducing this burden, should be sent to the Chief Information Officer, U.S. Patent and Trademark Office, U.S. Department of Commerce, P.O. Box 1450, Alexandria, VA 22313-1450. DO NOT SEND FEES OR COMPLETED FORMS TO THIS ADDRESS. **SEND TO: Mail Stop Expedited Design, Commissioner for Patents, P.O. Box 1450, Alexandria, VA 22313-1450.**

If you need assistance in completing the form, call 1-800-PTO-9199 and select option 2.

11/25/2005 LWONDIM1 00000005 190733 29243173
04 FC:1802 900.00 DA

PTO/SB/27 (05-03)
Approved for use through 04/30/2003. OMB 0651-0031
U.S. Patent and Trademark Office; U.S. DEPARTMENT OF COMMERCE
Under the Paperwork Reduction Act of 1995, no persons are required to respond to a collection of information unless it displays a valid OMB control number.

113000 U.S.PTO
29/243174
112205

REQUEST FOR EXPEDITED EXAMINATION OF A DESIGN APPLICATION (37 CFR 1.155)

Application Number	TBD
Filing Date	Herewith
First Named Inventor	Perry Auger et al.
Title	Portion Of A Shoe Outsole
Atty Docket Number	015127.00550

HAND DELIVER TO THE DESIGN GROUP DIRECTOR'S OFFICE
-or- ADDRESS TO:
MAIL STOP EXPEDITED DESIGN
COMMISSIONER FOR PATENTS
P.O. Box 1450
Alexandria, VA 22313-1450

This is a request for expedited examination of a design application under 37 CFR 1.155.

NOTE: If the Request made by this form accompanies original application papers, include form PTO/SB/18 "Design Patent Application Transmittal" or its equivalent.

A preexamination search was conducted. The field of search was:

D2/ 902, 905, 906, 907, 908, 946, 947, 951, 952, 957 and 962

Related applications: 11/128,417 filed May 13, 2005 and 10/179,013 filed June 26, 2002

If not previously filed for the above-identified application, the following items required by 37 CFR 1.155 are enclosed:

Formal drawings (see 37 CFR 1.84).

The fee set forth in 37 CFR 1.17(k).

An information disclosure statement in compliance with 37 CFR 1.98.

12/6/05
Approved
Jacqueline M. Stone
Jacqueline M. Stone, Director
Technology Center 1700

November 22, 2005
Date

Anthony W. Kandare
Signature

202-824-3000
Telephone Number

Anthony W. Kandare, Reg. No. 48,830
Typed or printed name

WARNING: Information on this form may become public. Credit card information should not be included on this form. Provide credit card information and authorization on PTO-2038.

This collection of information is required by 37 CFR 1.155. The information is required to obtain or retain a benefit by the public which is to file (and by the USPTO to process) an application. Confidentiality is governed by 35 U.S.C. 122 and 37 CFR 1.14. This collection is estimated to take 6 minutes to complete, including gathering, preparing, and submitting the completed application form to the USPTO. Time will vary depending upon the individual case. Any comments on the amount of time you require to complete this form and/or suggestions for reducing this burden, should be sent to the Chief Information Officer, U.S. Patent and Trademark Office, U.S. Department of Commerce, P.O. Box 1450, Alexandria, VA 22313-1450. DO NOT SEND FEES OR COMPLETED FORMS TO THIS ADDRESS. SEND TO: Mail Stop Expedited Design, Commissioner for Patents, P.O. Box 1450, Alexandria, VA 22313-1450.

If you need assistance in completing the form, call 1-800-PTO-9199 and select option 2.

11/23/2005 LWONDIM1 00000061 190733 29243174
04 FC:1802 900.00 DA

UNITED STATES PATENT AND TRADEMARK OFFICE

Commissioner for Patents
United States Patent and Trademark Office
P.O. Box 1450
Alexandria, VA 22313-1450
www.uspto.gov

COPY MAILED

APR 23 2007

OFFICE OF PETITIONS

HOVEY WILLIAMS LLP
2405 GRAND BLVD., SUITE 400
KANSAS CITY, MO 64108

In re Application of Mullet et al. :
Application No. 29/243,201 : Decision on Petition
Filing Date: November 21, 2005 :
Attorney Docket No. D36437 :

This is a decision on the petition under 37 CFR 1.137(b), filed November 29, 2006, to revive the above-identified application.

The petition is **granted**.

The above-identified application became abandoned for failure to submit formal drawings in a timely manner in reply to the Notice of Allowability mailed June 26, 2006, which set a period for reply of three (3) months. The above-identified application became abandoned on September 27, 2006. A Notice of Abandonment was mailed on November 8, 2006.

The instant petition requests revival of the application.

The formal drawings filed November 29, 2006, have been reviewed and approved by the examiner. Petitioner has also met all the other requirements to revive the above-identified application pursuant to 37 CFR 1.137(b). Therefore, the petition is granted and the application is revived.

The Office of Publications will be informed of the instant decision and it will take steps to have the application issued as a patent in due course.

Telephone inquiries regarding this communication should be directed to Petitions Attorney Steven Brantley at (571) 272-3203.

Charles Steven Brantley
Senior Petitions Attorney
Office of Petitions

UNITED STATES PATENT AND TRADEMARK OFFICE

Commissioner for Patents
United States Patent and Trademark Office
P.O. Box 1450
Alexandria, VA 22313-1450
www.uspto.gov

Tony Magnussen
5090 Caminito Exquisito
San Diego CA 92130

COPY MAILED

MAR 2 8 2007

OFFICE OF PETITIONS

In re Application of :
Tomas Floden :
Application No. 29/243,252 : ON PETITION
Filed: November 22, 2005 :
Title: Board Game Assembly :

This is a decision on the petition under 37 CFR 1.181 to withdraw the holding of abandonment, filed March 8, 2007.

The petition to withdraw the holding of abandonment is **Dismissed**.

Any request for reconsideration should be filed within **TWO MONTHS** of the mailing date of this decision in order to be considered timely. 37 CFR 1.181(f). This time period may not be extended pursuant to 37 CFR 1.136.

This application became abandoned for failure to timely submit the issue and publication fees, as required by the Notice of Allowance and Fee (s) Due which was mailed October 17, 2006. The Notice of Allowance and Fee (s) Due set a three (3) month statutory period for reply. Extensions of time were not available under the provisions of 37 CFR 1.136(a). Accordingly, this application became abandoned on January 18, 2007. A Notice of Abandonment was mailed on February 23, 2007.

Petitioner contends the Notice of Allowance and Notice of Allowability were never received.

Petitioner's argument has been considered but it is not convincing to establish the holding of abandonment should be withdrawn. The showing required to establish the failure to receive an Office communication must include a statement from the practitioner stating that the Office communication was not received by the practitioner and attesting to the fact that a search of the file jacket and docket records indicates that the Office communication was not received. A copy of the docket record where the non-received Office communication would have been entered had it been received and

docketed must be attached to and referenced in practitioner's statement.[1] The showing outlined above may not be sufficient if there are circumstances that point to a conclusion that the Notice of Allowance may have been lost after receipt rather than a conclusion that the Notice of Allowance was lost in the mail.

For example, if a three month period for reply was set in the nonreceived non-final office action, a copy of the docket report showing all replies docketed for a date three months from the mail date of the nonreceived Notice of Allowance must be submitted as documentary proof of non-receipt of the Notice of Allowance. The showing outlined above may not be sufficient if there are circumstances that point to a conclusion that the Notice of Allowance may have been lost after receipt rather than a conclusion that the Notice of Allowance was lost in the mail.

Petitioner has failed to provide any docket records. The Office is interested in docket records maintained by Tony Magnusson because that is the correspondence address of record and where the Notice of Allowance was mailed.

To the extent petitioner is unable to provide docket records showing were the Notice of Allowance would have been entered had it been received, petitioner will need to file a petition under 37 CFR 1.137(b).

Further correspondence with respect to this matter should be addressed as follows:

By mail:	Mail Stop Petition Commissioner for Patents P.O. Box 1450 Alexandria, VA 22313-1450
By facsimile:	(571) 273-8300
By delivery service: (FedEx, UPS, DHL, etc.)	U.S. Patent and Trademark Office Customer Service Window, Randolph Building 401 Dulany Street Alexandria, VA 22314

[1] M.P.E.P. § 711.03(c); See Notice entitled "Withdrawing the Holding of Abandonment When Office Actions Are Not Received," 1156 O.G. 53 (November 16, 1993).

Telephone inquiries concerning this matter should be directed to the undersigned at (571) 272-3215.

Charlema R. Grant

Charlema R. Grant
Petitions Attorney
Office of Petitions

UNITED STATES PATENT AND TRADEMARK OFFICE

Commissioner for Patents
United States Patent and Trademark Office
P.O. Box 1450
Alexandria, VA 22313-1450
www.uspto.gov

Tony Magnussen
5090 Caminito Exquisito
San Diego CA 92130

COPY MAILED

MAY 11 2007

OFFICE OF PETITIONS

In re Application of
Floden
Application No. 29/243,252
Filed: November 22, 2005
Attorney Docket Number: MT-0001
Title of Invention: Board Game Assembly

ON PETITION

This is a decision on the petition under 37 CFR 1.137(b), filed April 17, 2007, to revive the above-identified application.

This application became abandoned for failure to timely submit the issue and publication fees, as required by the Notice of Allowance and Fee (s) Due which was mailed October 17, 2006. The Notice of Allowance and Fee (s) Due set a three (3) month statutory period for reply. Extensions of time were not available under the provisions of 37 CFR 1.136(a). Accordingly, this application became abandoned on January 18, 2007. A Notice of Abandonment was mailed on February 23, 2007. A petition was dismissed March 28, 2007.

The requirements for a grantable petition under 37 CFR 1.137(b) have been met. This petition is hereby **Granted**.

The Office is in receipt of the terminal disclaimer.

This application is being forwarded to the Office of Patent Publication for processing into a patent.

Telephone inquiries concerning this matter should be directed to the undersigned at (571) 272-3215.

Charlema R. Grant

Charlema R. Grant
Petitions Attorney
Office of Petitions

UNITED STATES PATENT AND TRADEMARK OFFICE

Commissioner for Patents
United States Patent and Trademark Office
P.O. Box 1450
Alexandria, VA 22313-1450
www.uspto.gov

MIDDLETON & REUTLINGER
2500 BROWN & WILLIAMSON TOWER
LOUISVILLE KY 40202

COPY MAILED

SEP 13 2007

OFFICE OF PETITIONS

In re Application of :
Scott R. Santoro :
Application No. 29/243,261 : DECISION ON PETITION
Filed: November 22, 20205 :
Attorney Docket No. ZK766/06040 :

This is a decision on the petition under 37 CFR 1.137(b), filed July 11, 2007 and supplemented on August 15 and 16, 2007, to revive the above-identified application.

The petition is **DISMISSED**.

Any request for reconsideration of this decision must be submitted within TWO (2) MONTHS from the mail date of this decision. Extensions of time under 37 CFR 1.136(a) are permitted. The reconsideration request should include a cover letter entitled "Renewed Petition under 37 CFR 1.137(b)." This is **not** a final agency action within the meaning of 5 U.S.C. § 704.

The application became abandoned for failure to timely pay the issue fee on or before July 10, 2007, as required by the Notice of Allowance and Fee(s) Due, mailed April 10, 2007, which set a statutory period for reply of three (3) months. Accordingly, the application became abandoned on July 11, 2007.

A grantable petition under 37 CFR 1.137(b) must be accompanied by: (1) the required reply, unless previously filed; (2) the petition fee as set forth in 37 CFR 1.17(m); (3) a statement that the entire delay in filing the required reply from the due date for the reply until the filing of a grantable petition pursuant to 37 CFR 1.137(b) was unintentional; and **(4) any terminal disclaimer (and fee as set forth in 37 CFR 1.20(d)) required by 37 CFR 1.137(d)**. Where there is a question as to whether either the abandonment or the delay in filing a petition under 37 CFR 1.137 was unintentional, the Director may require additional

information. *See* MPEP 711.03(c)(II)(C) and (D). The instant petition lacks item (4).

A terminal disclaimer was received on August 15, 2007. However, this terminal disclaimer is improper since it is more appropriately for purposes of obviating a provisional double patenting rejection. While the terminal disclaimer submitted on August 16, 2007 is appropriate under 37 CFR 1.137(d) for disclaiming the terminal months for the period of abandonment of this application, the terminal disclaimer is unacceptable since the terminal disclaimer fails to state the number of months being disclaimed. If a new terminal disclaimer is submitted on or before October 11, 2007, the terminal period to be disclaimed will be three (3) months. For each month after that, an additional month must be disclaimed.

The terminal disclaimer should be accompanied by a renewed petition to revive under 37 CFR 1.137(b) (no additional fee required), and be addressed as follows:

By Mail: Mail Stop PETITION
Commissioner for Patents
P. O. Box 1450
Alexandria, VA 22313-1450

By hand: U. S. Patent and Trademark Office
Customer Service Window, Mail Stop Petitions
Randolph Building
401 Dulany Street
Alexandria, VA 22314

The centralized facsimile number is **(571) 273-8300.**

Correspondence regarding this decision may also be filed through the electronic filing system of the USPTO.

Telephone inquiries concerning this decision should be directed to the undersigned at (571) 272-3218.

Frances Hicks
Petitions Examiner
Office of Petitions

UNITED STATES PATENT AND TRADEMARK OFFICE

COMMISSIONER FOR PATENTS
UNITED STATES PATENT AND TRADEMARK OFFICE
P.O. BOX 1450
ALEXANDRIA, VA 22313-1450
www.uspto.gov

MIDDLETON & REUTLINGER
2500 BROWN & WILLIAMSON TOWER
LOUISVILLE KY 40202

COPY MAILED

OCT 16 2007

OFFICE OF PETITIONS

In re Application of :
Scott R. Santoro :
Application No. 29/243,261 : DECISION ON PETITION
Filed: November 22, 20205 :
Attorney Docket No. ZK766/06040 :

This is a decision on the renewed petition under 37 CFR 1.137(b), filed September 17, 2007, to revive the above-identified application.

The petition is **GRANTED**.

The application became abandoned for failure to timely pay the issue fee on or before July 10, 2007, as required by the Notice of Allowance and Fee(s) Due, mailed April 10, 2007, which set a statutory period for reply of three (3) months. Accordingly, the application became abandoned on July 11, 2007.

The terminal disclaimer is accepted and has been made of record. Any continuing application filed from this application must contain a copy of the terminal disclaimer. The copy of the terminal disclaimer must be filed with a cover letter requesting the terminal disclaimer be recorded on the continuing application. A copy of this decision should be attached to the cover letter.

Telephone inquiries concerning this decision should be directed to the undersigned at (571) 272-3218.

This application is being referred to Publishing Division for further processing in accordance with this decision accepting the late payment of the issue fee.

Frances Hicks
Petitions Examiner
Office of Petitions

UNITED STATES PATENT AND TRADEMARK OFFICE

Commissioner for Patents
United States Patent and Trademark Office
P.O. Box 1450
Alexandria, VA 22313-1450
www.uspto.gov

ROGERS TOWERS, P.A.
1301 RIVERPLACE BOULEVARD, SUITE 1500
JACKSONVILLE FL 32207

COPY MAILED

MAR 31 2008

OFFICE OF PETITIONS

In re Application of :
CHARLES D. STARNES :
Application No. 29/243,278 :
Filed: 11/22/2005 :
Attorney Docket No. STARNES-549 :

DECISION ON PETITION

This is a decision on the petition under the unintentional provisions of 37 CFR 1.137(b), filed December 26, 2007, to revive the above-identified application.

The petition is **GRANTED**.

This application became abandoned for failure to timely submit corrected drawings in response to the Notice of Allowability, mailed June 22, 2007, which set a three month statutory period for reply. Accordingly, this application became abandoned on September 23, 2007. A Notice of Abandonment was mailed on December 6, 2007.

The petition satisfies the requirements of 37 CFR 1.137(b) in that petitioner has supplied (1) the reply in the form of corrected drawings, (2) the petition fee, (3) a proper statement of unintentional delay, and (4) a terminal disclaimer (and fee).

The terminal disclaimer submitted on December 26, 2007, is accepted.

This matter is being forwarded to the Office of Patent Publication for processing into a patent.

Telephone inquiries concerning the issuance of the application into a patent should be directed to the Office of Patent Publication, Customer Service at (571) 272-4200.

Telephone inquiries specifically concerning this decision should be directed to the undersigned at (571) 272-3211.

Christina Tartera Donnell

Christina Tartera Donnell
Senior Petitions Attorney
Office of Petitions

UNITED STATES PATENT AND TRADEMARK OFFICE

COMMISSIONER FOR PATENTS
UNITED STATES PATENT AND TRADEMARK OFFICE
P.O. BOX 1450
ALEXANDRIA, VA 22313-1450
WWW.USPTO.GOV

Paper No.

JOHN S. PRATT
KILPATRICK STOCKTON LLP (L3440)
1100 PEACHTREE STREET
SUITE 2800
ATLANTA GA 30309

COPY MAILED

APR 15 2008

OFFICE OF PETITIONS

In re Application of	:	
Robin C. Lee et al.	:	
Application No. 29/243,286	:	DECISION ON PETITION
Filed: November 22, 2005	:	PURSUANT TO
Attorney Docket Number:	:	37 C.F.R. § 1.137(b)
L3440/323049	:	
Title: WINDING STICK	:	

This is a decision on the petition, pursuant to 37 C.F.R. § 1.137(b), to revive the above-identified application, filed on August 9, 2007.

This petition is **DISMISSED.**

The above-identified application became abandoned for failure to submit the issue fee and corrected drawings in a timely manner in reply to the Notice of Allowance and Issue Fee Due, mailed May 7, 2007, which set a shortened statutory period for reply of three months. No response was received, and no extensions of time are permitted for transmitting issue fees or corrected drawings[1]. Accordingly, the above-identified application became abandoned on August 8, 2007. A Notice of Abandonment was mailed subsequent to the filing of this petition on January 23, 2008.

A grantable petition pursuant to 37 C.F.R § 1.137(b) must be accompanied by:

(1) The reply required to the outstanding Office action or notice, unless previously filed;
(2) The petition fee as set forth in 37 C.F.R § 1.17(m);

1 See M.P.E.P. § 710.02(e).

(2) A statement that the entire delay in filing the required reply from the due date for the reply until the filing of a grantable petition pursuant to this paragraph was unintentional. The Commissioner may require additional information where there is a question whether the delay was unintentional, and;
(3) Any terminal disclaimer (and fee as set forth in 37 C.F.R § 1.20(d)) required pursuant to paragraph (d) of this section.

With this petition, Petitioner has included the issue and petition fees, corrected drawings, and the proper statement of unintentional delay.

Petitioner has met requirements (1) - (3) of Rule 1.137(b).

Regarding the fourth requirement, Petitioner has incorrectly characterized this application as a utility application, and has erroneously indicated that a terminal disclaimer is not required. As such, Petitioner failed to provide the required terminal disclaimer and fee. See 37 C.F.R §§ 1.137(b)(4) and (d).

Any reply must be submitted within **TWO MONTHS** from the mail date of this decision. Extensions of time under 37 C.F.R. § 1.136(a) are permitted. The reply should include a cover letter entitled "Renewed Petition pursuant to 37 C.F.R. § 1.137(b)". This is not a final agency action within the meaning of 5 U.S.C § 704.

The renewed petition should indicate in a prominent manner that the attorney handling this matter is Paul Shanoski, and may be submitted by mail[2], hand-delivery[3], or facsimile[4].

If responding by mail, Petitioner is advised not to place the undersigned's name on the envelope. Only the information that appears in the footnote should be included - adding anything else to the address will delay the delivery of the response to the undersigned.

Telephone inquiries regarding *this decision* should be directed to the undersigned at (571) 272-3225[5]. All other inquiries

---

2 Mail Stop Petition, Commissioner for Patents, United States Patent and Trademark Office, P.O. Box 1450, Alexandria, VA, 22313-1450.
3 Customer Window, Randolph Building, 401 Dulaney Street, Alexandria, VA, 22314.
4 (571) 273-8300- please note this is a central facsimile number.
5 Petitioner will note that all practice before the Office should be in writing, and the action of the Office will be based exclusively on the written record in the Office. See 37 C.F.R. § 1.2. As such, Petitioner is

concerning examination procedures or status of the application should be directed to the Technology Center.

/Paul Shanoski/
Paul Shanoski
Senior Attorney
Office of Petitions

---

reminded that no telephone discussion may be controlling or considered authority for any further action(s) of Petitioner.

UNITED STATES PATENT AND TRADEMARK OFFICE

COMMISSIONER FOR PATENTS
UNITED STATES PATENT AND TRADEMARK OFFICE
P.O. BOX 1450
ALEXANDRIA, VA 22313-1450
WWW.USPTO.GOV

Paper No.

JOHN S. PRATT
KILPATRICK STOCKTON LLP (L3440)
1100 PEACHTREE STREET
SUITE 2800
ATLANTA GA 30309

COPY MAILED

AUG 14 2008

OFFICE OF PETITIONS

In re Application of	:	
Robin C. Lee et al.	:	
Application No. 29/243,286	:	DECISION ON RENEWED
Filed: November 22, 2005	:	PETITION PURSUANT TO
Attorney Docket Number:	:	37 C.F.R. § 1.137(b)
L3440/323049	:	
Title: WINDING STICK	:	

This is a decision on the renewed petition, pursuant to 37 C.F.R. § 1.137(b), to revive the above-identified application, filed on July 21, 2008.

This renewed petition is **GRANTED**.

The above-identified application became abandoned for failure to submit the issue fee and corrected drawings in a timely manner in reply to the Notice of Allowance and Issue Fee Due, mailed May 7, 2007, which set a shortened statutory period for reply of three months. No response was received, and no extensions of time are permitted for transmitting issue fees or corrected drawings[1]. Accordingly, the above-identified application became abandoned on August 8, 2007. A Notice of Abandonment was mailed subsequent to the filing of this petition on January 23, 2008.

A grantable petition pursuant to 37 C.F.R § 1.137(b) must be accompanied by:

(1) The reply required to the outstanding Office action or notice, unless previously filed;
(2) The petition fee as set forth in 37 C.F.R § 1.17(m);

1 See M.P.E.P. § 710.02(e).

(2) A statement that the entire delay in filing the required reply from the due date for the reply until the filing of a grantable petition pursuant to this paragraph was unintentional. The Commissioner may require additional information where there is a question whether the delay was unintentional, and;
(3) Any terminal disclaimer (and fee as set forth in 37 C.F.R § 1.20(d)) required pursuant to paragraph (d) of this section.

An original petition pursuant to 37 C.F.R. § 1.137(b) was filed on August 9, 2007, along with the issue and petition fees, corrected drawings, and the proper statement of unintentional delay, and was dismissed via the mailing of a decision on April 15, 2008. The decision indicated that requirements (1) - (3) of Rule 1.137(b) had been satisfied, but that the fourth requirement had not been satisfied due to Petitioner's failure to provide the required terminal disclaimer and fee. See 37 C.F.R §§ 1.137(b)(4) and (d).

With this renewed petition, Petitioner has included a terminal disclaimer that has been executed by an attorney of record pursuant to 37 C.F.R § 1.321(b)(1)(iv), the associated fee, and a two-month extension of time so as to make timely this response.

The Office of Patent Application Processing (OPAP) will be notified of this decision so that the application may receive further processing.

The general phone number for OPAP is 571-272-4000. Telephone inquiries **regarding this decision** should be directed to the undersigned at (571) 272-3225[2].

/Paul Shanoski/
Paul Shanoski
Senior Attorney
Office of Petitions

---

2 Petitioner will note that all practice before the Office should be in writing, and the action of the Office will be based exclusively on the written record in the Office. See 37 C.F.R. § 1.2. As such, Petitioner is reminded that no telephone discussion may be controlling or considered authority for any further action(s) of Petitioner.

UNITED STATES PATENT AND TRADEMARK OFFICE

Commissioner for Patents
United States Patent and Trademark Office
P.O. Box 1450
Alexandria, VA 22313-1450
www.uspto.gov

KNOBBE MARTENS OLSON & BEAR LLP
2040 MAIN STREET
FOURTEENTH FLOOR
IRVINE, CA 92614

MAILED

MAR 30 2009

OFFICE OF PETITIONS

In re Application of :
Caserta et al. :
Application No. 29/243,398 : ON PETITION
Filed: November 23, 2005 :
Attorney Docket No. HERR2.003DUS :

This is a decision on the petition under the unintentional provisions of 37 CFR 1.137(b), filed January 21, 2009, to revive the above-identified application.

The petition is **DISMISSED**.

Any request for reconsideration of this decision must be submitted within TWO (2) MONTHS from the mail date of this decision. Extensions of time under 37 CFR 1.136(a) are permitted. The reconsideration request should include a cover letter entitled "Renewed Petition under 37 CFR 1.137(b)." This is **not** a final agency action within the meaning of 5 U.S.C. § 704.

A grantable petition under 37 CFR 1.137(b)[1] must be accompanied by: (1) the required reply,[2] unless previously filed, (2) the petition fee as set forth in 37 CFR 1.17(m), (3) a statement that the entire delay in filing the required reply from the due date for the reply until the filing of a grantable petition pursuant to 37 CFR 1.137(b) was unintentional, and (4) any terminal disclaimer (and fee as set forth in 37 CFR 1.20(d)) required by 37 CFR 1.137(d). Where there is a question as to whether either the abandonment or the delay in filing a petition under 37 CFR 1.137 was unintentional, the Director may require additional information. See MPEP 711.03(c)(II)(C) and (D).

The petition lacks item (4) above. Since the above-identified application is a design application, 37 CFR 1.137(d) requires a terminal disclaimer dedicating to the public a terminal part of the term of any patent granted thereon equivalent to the period of abandonment of the application. The period of abandonment will be computed to be the number of months from the date of abandonment to the date of filing a grantable petition. A terminal disclaimer fee of $140 ($70 if small entity) is required.

[1] As amended effective December 1, 1997. See Changes to Patent Practice and Procedure: Final Rule Notice, 62 Fed. Reg. 53131, 5194-95 (October 10, 1997), 1203 Off. Gaz. Pat. Office 63, 119-20 (October 21, 1997).

[2] In a nonprovisional application abandoned for failure to prosecute, the required reply may be met by the filing of a continuing application. In an application or patent, abandoned or lapsed for failure to pay the issue fee or any portion thereof, the required reply must be the payment of the issue fee or any outstanding balance thereof.

Petitioner should note that the Notice of Allowance of March 14, 2008 was improper therefore the issue fee in the amount of $820 including $15 for 5 printed copies of the patent, paid on June 16, 2008 (certificate of mailing date June 13, 2008) was refunded to petitioner's deposit account on June 18, 2008. On March 28, 2008 a proper Continued Prosecution Application was filed which placed the application in condition for allowance. On August 26, 2008 a proper Notice of Allowance was issued, however since the issue fee was not timely paid the application became abandoned. The current issue fee owed is $820 ($860 less $40 submitted with the petition herein). Petitioner's deposit account will be charged as authorized for the difference of $820 in due course.

Further correspondence with respect to this matter should be addressed as follows:

By Mail:
Mail Stop PETITION
Commissioner for Patents
P. O. Box 1450
Alexandria, VA 22313-1450

By hand:
U. S. Patent and Trademark Office
Customer Service Window, Mail Stop Petitions
Randolph Building
401 Dulany Street
Alexandria, VA 22314

The centralized facsimile number is **(571) 273-8300.**

Telephone inquiries concerning this decision should be directed to Alicia Kelley at (571) 272-6059.

/SDB/

Sherry D. Brinkley
Petitions Examiner
Office of Petitions

UNITED STATES PATENT AND TRADEMARK OFFICE

Commissioner for Patents
United States Patent and Trademark Office
P.O. Box 1450
Alexandria, VA 22313-1450
www.uspto.gov

KNOBBE MARTENS OLSON & BEAR LLP
2040 MAIN STREET
FOURTEENTH FLOOR
IRVINE, CA 92614

MAILED

AUG 14 2009

OFFICE OF PETITIONS

In re Application of :
Caserta et al. :
Application No. 29/243,398 : DECISION ON PETITION
Filed: November 23, 2005 :
Attorney Docket No. HERR2.003DUS :

This is a decision on the renewed petition under the unintentional provisions of 37 CFR 1.137(b), filed May 15, 2009, to revive the above-identified application.

The petition is **GRANTED**.

This application became abandoned for failure to timely pay the issue fee on or before November 26, 2008, as required by the Notice of Allowance and Fee(s) Due mailed August 26, 2008. Accordingly, the application became abandoned on November 27, 2008. A Notice of Abandonment was mailed December 22, 2008. On January 21, 2009, a petition under 37 CFR 1.137(b) was filed; however, the petition was dismissed in a petition decision mailed March 30, 2009. In response, on May 15, 2009, the present petition was filed.

The present petition satisfies the requirements of 37 CFR 1.137(b) in that petitioner has supplied (1) the reply in the form of payment of the issue fee of $860, (2) the petition fee of $1,620, (3) an adequate statement of unintentional delay, and (4) a terminal disclaimer and fee of $140 as required by 37 CFR 1.137(d).

The terminal disclaimer filed May 15, 2009, is accepted and has been made of record. Any continuing application filed from this application must contain a copy of the terminal disclaimer. The copy of the terminal disclaimer must be filed with a cover letter requesting the terminal disclaimer be recorded on the continuing application. A copy of this decision should be attached to the cover letter.
Telephone inquiries concerning this decision should be directed to Alicia Kelley at (571)272-6059.

This application is being referred to the Office of Data Management for processing into a patent.

/SDB/

Sherry D. Brinkley
Petitions Examiner
Office of Petitions

UNITED STATES PATENT AND TRADEMARK OFFICE

Commissioner for Patents
United States Patent and Trademark Office
P.O. Box 1450
Alexandria, VA 22313-1450
www.uspto.gov

WILLIAMS G. SYKES
3669 SEAGULL BLUFF DRIVE
VIRGINIA BEACH VA 23455

COPY MAILED

SEP 27 2007

OFFICE OF PETITIONS

In re Application of
Richard Spink
Application No. 29/243,399
Filed: November 25, 2005
Title: Built To Last Plastic Adirondack Chair

ON PETITION

This is a decision on the petition under 37 CFR 1.181 to withdraw the holding of abandonment, filed August 27, 2007.

The petition to withdraw the holding of abandonment is **Dismissed**.

Any request for reconsideration should be filed within **TWO MONTHS** of the mailing date of this decision in order to be considered timely. 37 CFR 1.181(f). This time period may not be extended pursuant to 37 CFR 1.136.

This application was held abandoned January 21, 2007 for failure to timely reply to the Ex parte Quayle Action mailed on November 20, 2006. The Ex parte Quayle Action set a two (2) month extendable time period for reply. This decision precedes the mailing of a Notice of Abandonment.

Petitioner contends the Ex parte Quayle Action mailed on November 20, 2006 was not received because it was mailed to the incorrect correspondence address.

Petitioner's argument has been considered but deemed unpersuasive. A review of the record shows that the Notice was properly mailed to the correspondence address of record. On filing petitioner requested that all correspondence for the above-identified application be sent to customer no. 50704. The request to send correspondence to the address associated with customer no. 50704 is present in both the declaration and the transmittal letter. Customer no. 50704 is associated with the New York address where

the correspondence was mailed. Further review shows that petitioner has confused his registration number with a customer number. Such a mistake while unfortunate, does not warrant the withdrawal of the holding of abandonment.

In the alternative, petitioner may wish to file a petition under 37 CFR 1.137(b). Petitioner is reminded that a terminal disclaimer and the $130 ($65 for small entity) terminal disclaimer fee is required under 37 CFR 1.137(c) if the application is: (1) a design application, (2) a utility application filed before June 8, 1995, or (3) a plant application filed before June 8, 1995.

Further correspondence with respect to this matter should be addressed as follows:

By mail:	Mail Stop Petition Commissioner for Patents P.O. Box 1450 Alexandria, VA 22313-1450
By facsimile:	(571) 273-8300
By delivery service: (FedEx, UPS, DHL, etc.)	U.S. Patent and Trademark Office Customer Service Window, Randolph Building 401 Dulany Street Alexandria, VA 22314

Telephone inquiries concerning this matter should be directed to the undersigned at (571) 272-3215.

Charlema R. Grant

Charlema R. Grant
Petitions Attorney
Office of Petitions

UNITED STATES PATENT AND TRADEMARK OFFICE

Commissioner for Patents
United States Patent and Trademark Office
P.O. Box 1450
Alexandria, VA 22313-1450
www.uspto.gov

WILLIAMS G. SYKES
3669 SEAGULL BLUFF DRIVE
VIRGINIA BEACH VA 23455

COPY MAILED

MAR 1 7 2008

OFFICE OF PETITIONS

In re Application of :
Spink :
Application No. 29/243,399 : DECISION ON PETITION
Filed: November 25, 2005 :
Attorney Docket No. 50704 :

This is a decision on the petition under the unintentional provisions of 37 CFR 1.137(b), filed January 22, 2008, to revive the above-identified application.

The petition is **GRANTED**.

This application was held abandoned January 21, 2007 for failure to timely reply to the Ex parte Quayle Action mailed on November 20, 2006. The Ex parte Quayle Action set a two (2) month extendable time period for reply. This decision precedes the mailing of a Notice of Abandonment. A petition filed under 37 CFR 1.181 was dismissed on September 27, 2007.

The petition satisfies the requirements of 37 CFR 1.137(b) in that petitioner has supplied (1) the reply in the form of an amendment, drawings and terminal disclaimer, (2) the petition fee of $770.00, and (3) a proper statement of unintentional delay.

Telephone inquiries concerning this decision should be directed to the undersigned at (571) 272-3215.

This application is being referred to Technology Center AU 2913 for appropriate action by the Examiner in the normal course of business on the reply received

Charlema Grant

Charlema Grant
Petitions Attorney
Office of Petitions

UNITED STATES PATENT AND TRADEMARK OFFICE

Commissioner for Patents
United States Patent and Trademark Office
P.O. Box 1450
Alexandria, VA 22313-1450
www.uspto.gov

YOUNG & THOMPSON
745 SOUTH 23RD STREET
2ND FLOOR
ARLINGTON, VA 22202

COPY MAILED

MAR 27 2006

OFFICE OF PETITIONS

In re Application of :
Damiani :
Application No. 29/243,409 : Decision on Petition
Filed: November 25, 2005 :
Attorney Docket No. 2502-1091 :
For: Jewellery Article :

This is a decision on the petition filed January 27, 2006 to accord the above-identified application a filing date of November 25, 2005.

The application was filed on November 25, 2005.

On January 20, 2006, the Office of Initial Patent Examination mailed a Notice stating that a specification and claim were not present and that a filing date had not been accorded.

In response, the present petition was filed alleging that a specification and claim were deposited on November 25, 2005. In support, petitioner has submitted a postcard receipt which acknowledges receipt of 1 page of specification and 1 claim on November 25, 2005.[1]

Upon review of the record, the specification and claim filed on November 25, 2005, have not been located. However, the evidence is convincing that the application papers deposited on November 25, 2005, included the specification and claim, and that the specification and claim were subsequently misplaced in the PTO. Therefore, the application is complete and entitled to a filing date of November 25, 2005.

In view of the above, the petition is **granted**.

The petition fee of $400 will be credited to petitioner's deposit account.

The Notice mailed January 20, 2006, was sent in error and is hereby vacated.

The Application is being returned to the Office of Initial Patent Examination for further processing with a filing date of November 25, 2005, using the application papers filed on November 25, 2005, and the copy of 1 page of specification and 1 claim filed on January 27, 2006.

Telephone inquiries should be directed to Petitions Attorney Steven Brantley at (571) 272-3203.

Charles Steven Brantley
Senior Petitions Attorney
Office of Petitions

[1] "A post card receipt which itemizes and properly identifies the papers which are being filed serves as *prima facie* evidence of receipt in the PTO of all items listed thereon by the PTO." M.P.E.P. § 503.

UNITED STATES PATENT AND TRADEMARK OFFICE

Commissioner for Patents
United States Patent and Trademark Office
P.O. Box 1450
Alexandria, VA 22313-1450
www.uspto.gov

12/19/05

wk

In re Application of :
Rick Kook :
Serial Number: 29/243,423 : DECISION
Filed: November 23, 2005 : ON
For: Cabinet : PETITION

This is in response to the request filed November 23, 2005, requesting expedited examination of a design application under 37 CFR 1.155.

37 CFR 1.155 establishes an expedited procedure for design applications. A design application may qualify for expedited examination provided the following requirements are met:

(A) A request for expedited examination is filed (Form PTO/SB/27 may be used);

(B) The design application is complete and it includes drawings in compliance with 37 CFR 1.84 (see 37 CFR 1.154 and MPEP § 1503 concerning the requirements for a complete design application);

(C) A statement is filed indicating that a preexamination search was conducted (a search made by a foreign patent office satisfies this requirement). The statement must also include a list of the field of search such as by U.S. Class and Subclass (including domestic patent documents, foreign patent documents and nonpatent literature);

(D) An information disclosure statement in compliance with 37 CFR 1.98 is filed;

(E) The basic design application filing fee set forth in 37 CFR 1 .16(f) is paid; and

(F) The fee for expedited examination set forth in 37 CFR 1.17(k) is paid.

If an application requesting expedited examination fails to comply with one or more of the requirements for expedited examination under 37 CFR 1.155, but the application is otherwise complete, the applicant will be promptly notified and required to comply with all requirements under 37 CFR 1.155 within a shortened time period extendable under 37 CFR 1.136(a). Unless all requirements under 37 CFR 1.155 are timely met, the application will await action in its regular turn.

In this case, applicant has not provided a statement indicating that a preexamination search was conducted (a search made by a foreign patent office satisfies this requirement). The statement must also include a list of the field of search such as by U.S. Class and Subclass (including domestic patent documents, foreign patent documents and nonpatent literature paid the fee for expedited examination as set forth in 37 CFR 1.17(k) and a statement indicating that a preexamination search was conducted as set forth in 37 CFR 1.155(a)(3)(ii) and an information disclosure statement in compliance with 37 CFR 1.98 .

The Request is **Denied**.

JStone

Jacqueline Stone, Director
Technology Center 2900
Designs

Robert E. Cannuscio
Drinker Biddle & Reath, LLP
One Logan Square
18th and Cherry Streets
Philadelphia, PA 19103

PTO/SB/27 (09-04)
Approved for use through 07/31/2006. OMB 0651-0031
U.S. Patent and Trademark Office; U.S DEPARTMENT OF COMMERCE
Under the Paperwork Reduction ACT of 1995, no persons are required to respond to collection of information unless it displays a valid OMB control number.

REQUEST FOR EXPEDITED EXAMINATION OF A DESIGN APPLICATION (37 CFR 1.155)

Application Number	Filed Herewith
Filing Date	Filed Herewith
First Named Inventor	DARDASHTI, Shahriar L.
Title	Wire Spinner Multimedia Rack
Atty Docket Number	05-15190

113005 U.S. PTO
29/243467
112305

ADDRESS TO:
MAIL STOP EXPEDITED DESIGN
COMMISSIONER FOR PATENTS
P.O. Box 1450
Alexandria, VA 22313-1450

This is a request for expedited examination of a design application under 37 CFR 1.155.

NOTE: If the Request made by this form accompanies original application papers, include form PTO/SB/18 "Design Patent Application Transmittal" or its equivalent.

A preexamination search was conducted. The field of search was:

CLASS/SUBCLASS 211/163, 181.1; 211/144, 165, 166; and D06/313, 317, 407, 457, 458, 462, 463, 464, 465, 487, 629

Related applications: None

If not previously filed for the above-identified application, the following items required by 37 CFR 1.155 are enclosed:

- Formal drawings (see 37 CFR 1.84).
- The fee set forth in 37 CFR 1.17(k).
- An information disclosure statement in compliance with 37 CFR 1.98.

12/15/05
Approved
Jacqueline M. Stone
Jacqueline M. Stone, Director
Technology Center 1700

Signature	11-22-05 Date
Daniel M. Cislo, Esq. Typed or printed name	32,973 Registration Number, if applicable
310-451-0647 Telephone Number	

WARNING: Information on this form may become public. Credit card information should not be included on this form. Provide credit card information and authorization on PTO-2038.

This collection of information is required by 37 CFR 1.155. The information is required to obtain or retain a benefit by the public which is to file (and by the USPTO to process) an application. Confidentiality is governed by 35 U.S.C. 122 and 37 CFR 1.11 and 1.14. This collection is estimated to take 6 minutes to complete, including gathering, preparing, and submitting the completed application form to the USPTO. Time will vary depending upon the individual case. Any comments on the amount of time you require to complete this form and/or suggestions for reducing this burden, should be sent to the Chief Information Officer, U.S. Patent and Trademark Office, U.S. Department of Commerce, P.O. Box 1450, Alexandria, VA 22313-1450. DO NOT SEND FEES OR COMPLETED FORMS TO THIS ADDRESS. SEND TO: Commissioner for Patents, P.O. Box 1450, Alexandria, VA 22313-1450.

If you need assistance in completing the form, call 1-800-PTO-9199 and select option 2.

11/29/2005 JBALIHAN 00000012 29243467
04 FC:1802 900.00 OP

UNITED STATES PATENT AND TRADEMARK OFFICE

Commissioner for Patents
United States Patent and Trademark Office
P.O. Box 1450
Alexandria, VA 22313-1450
www.uspto.gov

SNELL & WILMER LLP (OC)
600 ANTON BOULEVARD
SUITE 1400
COSTA MESA, CA 92626

COPY MAILED

MAY 09 2007

OFFICE OF PETITIONS

In re Application of	:	
Asada et al.	:	
Application No.: 29/243488	:	DECISION ON
Filing or 371(c) Date: 11/25/2005	:	PETITION
Patent Number: D535244	:	
Issue Date: 01/16/2007	:	
Attorney Docket Number: 42610-8500	:	

This is a decision in response to the Petition to the Director Pursuant to 37 CFR 1.181 for Permission to Pay the Issue Fee on an Inadvertent Issued US Design Patent," filed March 19, 2007. The petition is properly treated as a petition to withdraw the holding of abandonment for failure to receive an Office action.

This Petition is hereby **dismissed**.

Any further petition must be submitted within TWO (2) MONTHS from the mail date of this decision. **This time period may not be extended**.

Background

The application was filed on November 25, 2005. The application Transmittal Form included customer number 21611, and the correspondence address for Snell & Wilmer LLP, 600 Anton Boulevard, Suite 1400, Costa Mesa, CA 92626. The Oath/Declaration appointed the attorneys associated with Customer Number 21611 as the attorneys of record.

The application filing receipt, mailed December 16, 2005, was mailed to the address associated with customer number 21611: Snell & Wilmer, Suite 1200, 1920 Main Street, Irvine, CA 92614-7230[1].

The next Office communication mailed was a Notice of Allowance and Issue Fee Due and Notice of Allowability, mailed August 31, 2006, to Snell & Wilmer, Suite 1200, 1920 Main

[1] If more than one correspondence address is specified in a single document, the Office will select one of the specified addresses for use as the correspondence address and, if given, will select the address associated with a Customer Number over a typed correspondence address. MPEP 601.03. (Emphasis supplied).

Street, Irvine, CA 92614-7230. The Notices re-appear in the application file on September 11, 2006, and were apparently returned to this Office, unexecuted.

This Office subsequently issued a patent on the above-identified application on January 16, 2007, having never received the issue fee.

Applicable Law, Rules and MPEP

35 U.S.C. 151, Issue of patent, states:

> If it appears that applicant is entitled to a patent under the law, a written notice of allowance of the application shall be given or mailed to the applicant. The notice shall specify a sum, constituting the issue fee or a portion thereof, which shall be paid within three months thereafter.

Petitioner is reminded that the use of "shall" appears in 35 USC § 151 pertaining to payment of the issue fee. It is well settled that the use of "shall" in a statute is the language of command, and where the directions of a statute are mandatory, strict compliance with the statutory terms is essential. Farrel Corp. v. U.S. Int'l Trade Comm'n, 942 F.2d 1147, 20 USPQ2d 1912 (Fed. Cir. 1991). That is, it is mandatory that the Director charge, and the applicant pay, the issue fee within three months after the Notice of Allowance and issue Fee Due was mailed. See BEC Pressure Controls Corp. v. Dwyer Instruments, Inc., 380 F.Supp. 1397, 1399, 182 USPQ 190, 192 (N.D. Ind. 1974). The language of the statute does not permit the Director any discretion with respect to charging the fees set forth therein. Id.

The MPEP 711.03(c)A, Petition To Withdraw Holding of Abandonment Based on Failure To Receive Office Action, provides

> In Delgar v. Schulyer, 172 USPQ 513 (D.D.C. 1971), the court decided that the Office should mail a new Notice of Allowance in view of the evidence presented in support of the contention that the applicant's representative did not receive the original Notice of Allowance. Under the reasoning of Delgar, an allegation that an Office action was never received may be considered in a petition to withdraw the holding of abandonment. If adequately supported, the Office may grant the petition to withdraw the holding of abandonment and remail the Office action. That is, the reasoning of Delgar is applicable regardless of whether an application is held abandoned for failure to timely pay the issue fee (35 U.S.C. 151) or for failure to prosecute (35 U.S.C. 133). To minimize costs and burdens to practitioners and the Office, the Office has modified the showing required to establish nonreceipt of an Office action. The showing required to establish nonreceipt of an Office communication must include a statement from the practitioner stating that the Office communication was not received by the practitioner and attesting to the fact that a search of the file jacket and docket records indicates that the Office communication was not received. A copy of the docket record where the nonreceived Office communication would have been entered had it been received and docketed must be attached to and referenced in

> practitioner's statement. For example, if a three month period for reply was set in the nonreceived Office action, a copy of the docket report showing all replies docketed for a date three months from the mail date of the nonreceived Office action must be submitted as documentary proof of nonreceipt of the Office action. The showing outlined above may not be sufficient if there are circumstances that point to a conclusion that the Office action may have been lost after receipt rather than a conclusion that the Office action was lost in the mail (e.g., if the practitioner has a history of not receiving Office actions). (Emphasis supplied)

MPEP 711.03(c)

Petition under 37 CFR 1.181

Applicant files the instant petition and asserts that it relocated its Office in the summer of 2005; filed a Request for Customer Number Change on July 18, 2005, and received an acknowledgment receipt from this Office on August 5, 2005. Applicant states that "the customer Number 2611 clearly identified [their] current address at the time of filing of the design application on November 25, 2005." Applicant asserts that it subsequently received a Notice of Assignment Recordation at their 600 Anton Boulevard, Costa Mesa address.

Applicant avers that the next communication it received regarding this application was a telephone call from this Office that the patent had issued, and that it subsequently received the Letters Patent Grant.

Applicant files the present petition and asserts that this Office erred in not recording the proper address associated with their Customer Number despite having received communication at the address associated with the return of their assignment recordation. Applicant states that, when they filed the address change in the summer of 2005, they were informed by this Office that this would be accepted by the PTO for all of Applicant's pending cases. (Emphasis supplied).

Analysis

A review of the Request for Customer Number Change filed on July 18, 2005, reveals that the change requested (and made) was to delete a practitioner registration number from the Customer Number (21611). There was no indication on the Request for Customer Number Change to change the address associated with Customer Number 21611. As such, Applicant has failed to demonstrate that a request to change the correspondence address associated with Customer Number 21611was timely filed prior to the mailing of the Notice of Allowance and Issue Fee Due.

Applicant asserts that this office mailed correspondence to Applicant at their 600 Anton Boulevard, Costa Mesa address; however, Office records also reveal that the Filing Receipt in the above-identified application was mailed to the Irvine, CA address.

Conclusion

Due to errors on the part of Applicant and this Office, the correspondence address associated with Customer Number 21611 was not changed in the above-identified application prior to the mailing of the Notice of Allowance and Issue Fee Due. The holding of abandonment will not be withdrawn. However, because there were errors by this Office as well as Applicant which may be said to have contributed to the failure to timely pay the issue fee, the delay in paying the issue fee may be said to have been unavoidable on the part of Applicant. The petition is dismissed.

Applicant is advised to file a petition under 37 CFR 1.137(a) to revive the application based upon an unavoidably delayed payment of the issue fee.

Further correspondence with respect to this matter should be addressed as follows:

By mail: Commissioner for Patents
PO Box 1450
Alexandria, VA 22313-1450

By FAX: (571) 273-8300
Attn: Office of Petitions

By hand: Customer Service Window
Randolph Building
401 Dulany Street
Alexandria, VA 22314

Telephone inquiries concerning this matter should be directed to the undersigned at (571) 272-3232.

Derek L. Woods
Attorney
Office of Petitions

UNITED STATES PATENT AND TRADEMARK OFFICE

Commissioner for Patents
United States Patent and Trademark Office
P.O. Box 1450
Alexandria, VA 22313-1450
www.uspto.gov

SNELL & WILMER LLP (OC)
600 ANTON BOULEVARD
SUITE 1400
COSTA MESA, CA 92626

COPY MAILED

AUG 20 2007

OFFICE OF PETITIONS

In re Application of	:	
Asada et al.	:	
Application No.: 29/243488	:	NOTICE VACATING
Filing or 371(c) Date: 11/25/2005	:	PATENT GRANT
Patent Number: D535244	:	MAILED 01/16/2007
Issue Date: 01/16/2007	:	
Attorney Docket Number: 42610-8500	:	

This is a Notice in response to the Second Petition to the Office of Petitions Pursuant to 37 CFR § 1.181 for Permission to Pay the Issue Fee on an Inadvertent Issued US Design Patent," filed May 25, 2007. The purpose of this Notice is to advise you that the above-identified application was mistakenly indicated to have been granted as U.S. Patent No. D535244 on January 16, 2007.

The record discloses that a Notice of Allowance and Issue Fee Due and a Notice of Allowability were mailed on August 31, 2006, with the issue fee being due on or before December 1, 2007. The Notices mailed on August 31, 2006 were returned to the PTO as undeliverable. Although the issue fee was not paid, a patent issued on the instant application on January 16, 2007.

The issue fee was not paid in reply to the Notice of Allowance and Issue Fee Due and Notice of Allowability, mailed August 31, 2006. The patent statute conditions issuance of the patent on payment of the issue fee. See 35 U.S.C. § 151, ¶ 2 ("[u]pon payment of [the issue fee] the patent shall issue"). Therefore, the PTO's publication (on January 16, 2007) of a patent document purporting to be a patent was in error.

Accordingly, the following erratum will be published in the Official Gazette:

> All reference to Patent No. D535244 to Takeshi Asada et al of Japan for WATER SCOOTER appearing in the Official Gazette of January 16, 2007 should be deleted since no patent was granted.

With the present petition, Applicant has demonstrated non-receipt of the Notices[1]. This application will be forwarded to Technology Center AU 2915 for re-mailing of the Notices and re-starting the period for response.

Any questions concerning this matter may be directed to Derek Woods at (571) 272-3232.

Charles Pearson
Director
Office of Petitions

cc: Paul Harrison
Deneise Boyd
Mary Louise McAskill
Niomi Farmer
Mary E. Johnson (Cookie)
Duane Davis (CDS)
Bradley Harris
Kimberly Terrell
Kay Pinkney
Betty Powell

[1] Petitioner has demonstrated that a timely Request for Customer Number Data Change, to change the correspondence address for the customer number associated with the above-identified application, was filed on August 4, 2005.

UNITED STATES PATENT AND TRADEMARK OFFICE

COMMISSIONER FOR PATENTS
UNITED STATES PATENT AND TRADEMARK OFFICE
P.O. BOX 1450
ALEXANDRIA, VA 22313-1450
www.uspto.gov

NIXON PEABODY LLP - PATENT GROUP
1100 CLINTON SQUARE
ROCHESTER, NY 14604

COPY MAILED

JUN 20 2008

OFFICE OF PETITIONS

In re Application of :
Samuel William Lucking :
Application No. 29/243,491 : ON PETITION
Filed: November 23, 2005 :
Attorney Docket No. 2308/2220 :
(1620/913/D/US) :

This is a decision on the petition under 37 CFR 1.137(b), filed November 9, 2007, to revive the above-identified application.

The application became abandoned for failure to timely file a reply to the Notice of Allowability mailed on October 17, 2006. A Notice of Abandonment was mailed on August 15, 2007.

The petition is **dismissed**.

A grantable petition under 37 CFR 1.137(b) must be accompanied by: (1) the required reply, unless previously filed; (2) the petition fee as set forth in 37 CFR 1.17(m); (3) a statement that the entire delay in filing the required reply from the due date for the reply until the filing of a grantable petition pursuant to 37 CFR 1.137(b) was unintentional; and (4) any terminal disclaimer (and fee as set forth in 37 CFR 1.20(d)) required by 37 CFR 1.137(d). Where there is a question as to whether either the abandonment or the delay in filing a petition under 37 CFR 1.137 was unintentional, the Commissioner may require additional information. See MPEP 711.03(c)(II)(C) and (D). The instant petition lacks items (1) and (3).

The Office acknowledges receipt of seven sheets of replacement drawings containing Figures 1-7, $770 for the instant petition and $130 for the Terminal Disclaimer filed on November 9, 2007. However, since the petition and Terminal Disclaimer fail to contain the registration number of Gunnar Leinberg, the petition, the statement of unintentional delay and Terminal Disclaimer cannot be accepted at this time.

The requirements for an S-signature under 37 CFR 1.4 (d)(2) are as follows:

> (i) The S-signature must consist only of letters, or Arabic numerals, or both, with appropriate spaces and commas, periods, apostrophes, or hyphens for punctuation, and the person signing the correspondence must insert his or her own S-signature with a first single forward slash mark before, and a second single forward slash mark after, the S-signature (e.g., /Dr. James T. Jones, Jr./); and
>
> (ii) A patent practitioner (§ 1.32(a)(1)), signing pursuant to §§ 1.33(b)(1) or 1.33(b)(2), must supply his/her registration number either as part of the S-signature, or immediately below or adjacent to the S-signature. The number (#) character may be used only as part of the S-signature when appearing before a practitioner's registration number; otherwise the number character may not be used in an S-signature.
>
> (iii) The signer's name must be:
>
> > (A) Presented in printed or typed form preferably immediately below or adjacent the S-signature, and
> >
> > (B) Reasonably specific enough so that the identity of the signer can be readily recognized.

The file does not indicate a change of address has been submitted, although the address given on the petition differs from the address of record. If appropriate, a change of address should be filed in accordance with MPEP 601.03. A courtesy copy of this decision is being mailed to the address given on the petition; however, the Office will mail all future correspondence solely to the address of record.

Any request for reconsideration of this decision must be submitted within **TWO (2) MONTHS** from the mail date of this decision. Extensions of time under 37 CFR 1.136(a) is permitted. The reconsideration request should include a cover letter entitled "Renewed Petition under 37 CFR 1.137(b)." This is **not** a final agency action within the meaning of 35 U.S.C. § 704.

Further correspondence with respect to this matter should be addressed as follows:

By mail:

Mail Stop PETITION
Commissioner for Patents
P. O. Box 1450
Alexandria, VA 22313-1450

By hand: U. S. Patent and Trademark Office
Customer Service Window, Mail Stop Petitions
Randolph Building
401 Dulany Street
Alexandria, VA 22314

The centralized facsimile number is **(571) 273-8300.**

Correspondence regarding this decision may also be filed through the electronic filing system of the USPTO.

To expedite consideration, petitioner may wish to contact the undersigned regarding the filing of the renewed petition under 37 CFR 1.137(b).

Telephone inquiries concerning this decision should be directed to the undersigned at (571) 272-3226.

Andrea Smith
Petitions Examiner
Office of Petitions

cc: Gunnar G. Leinberg
Nixon Peabody, LLP
Clinton Square, P.O. Box 31051
Rochester, NY 14603-1051

UNITED STATES PATENT AND TRADEMARK OFFICE

Commissioner for Patents
United States Patent and Trademark Office
P.O. Box 1450
Alexandria, VA 22313-1450
www.uspto.gov

NIXON PEABODY LLP - PATENT GROUP
1100 CLINTON SQUARE
ROCHESTER, NY 14604

COPY MAILED

JUL 16 2008

OFFICE OF PETITIONS

In re Application of :
Samuel William Lucking :
Application No. 29/243,491 : ON PETITION
Filed: November 23, 2005 :
Attorney Docket No. 2308/2220 :
(1620/913/D/US) :

This is a decision on the renewed petition under 37 CFR 1.137(b), filed July 15, 2008, to revive the above-identified application.

The petition satisfies the requirements of 37 CFR 1.137(b) in that petitioner has supplied (1) the reply in the form of seven (7) sheets of replacement drawings containing Figures 1-7, and the terminal disclaimer with the $130 fee ; (2) the petition fee of $770; and (3) a proper statement of unintentional delay. Therefore, the petition is **GRANTED**.

The terminal disclaimer under 37 CFR 1.137(d), filed July 15, 2008, has been accepted and made of record. Any continuing application filed from this application must contain a copy of the terminal disclaimer. The copy of the terminal disclaimer must be filed with a cover letter requesting the terminal disclaimer be recorded on the continuing application. A copy of this decision should be attached to the cover letter.

This application file is being referred to the Office of Data Management to be processed into a patent.

Telephone inquiries concerning this decision should be directed to the undersigned at (571) 272-3226.

Andrea Smith
Petitions Examiner
Office of Petitions

UNITED STATES PATENT AND TRADEMARK OFFICE

Commissioner for Patents
United States Patent and Trademark Office
P.O. Box 1450
Alexandria, VA 22313-1450
www.uspto.gov

Alfred F. Hoyte, Esq.
7734 16th Street, N.W.
Washington DC 20012

COPY MAILED

SEP 21 2007

OFFICE OF PETITIONS

In re Application of :
Meadows :
Application No. 29/243,520 : ON PETITION
Filed: November 28, 2005 :
Attorney Docket No. M40305.DES :
For: ACCESSORY ENCLOSURE
ATTACHMENT FOR SWIMMERS

This is a decision on the petition under 37 CFR 1.181, filed July 16, 2007 (certificate of mailing date July 9, 2007), requesting that the Office withdraw the holding of abandonment of the above-identified application.

The petition under 37 CFR 1.181 is **GRANTED**.

This application was held abandoned for failure to respond in a timely and complete manner to the Notice to File Missing Parts of Nonprovisional Application, mailed December 16, 2005, which set forth an extendable two (2) month period to submit a $130.00 surcharge, a $100.00 search fee, and a $130.00 examination fee. It is noted that the fees required were set at the large entity rate. Applicant filed a check for $140.00 ($65.00 small entity surcharge, $15.00 to complete the examination fee, and $60.00 for a one month extension of time) on March 23, 2006 (certificate of mailing date March 16, 2006). The Office mailed a Notice of Incomplete Reply (Nonprovisional) on March 30, 2006 and required applicant to transmit the $100.00 balance due for the search fee and examination fee. The period for response was that set in the December 16, 2005 Notice. The Office contended that this application became abandoned on March 17, 2006 for failure to completely reply to the December 16, 2005 Notice. A Notice of Abandonment was mailed on May 8, 2007.

Petitioner requests withdrawal of the holding of abandonment based on the assertion that a complete reply was timely filed in the Office on March 23, 2006 (certificate of mailing date March 16, 2006).

It is noted that petitioner has never made a plain statement that applicant is entitled to small entity status. However, the transmittal letter for the March 23, 2006 (certificate of mailing date March 16, 2006) response to the December 16, 2005 Notice states that a small entity surcharge is

being submitted. Per 509.03 Claiming Small Entity Status I. Assertion By Writing: ..."Written assertions of small entity status or references to small entity fees will be liberally interpreted to represent the required assertion...."

In light of the above, the petition under 37 CFR 1.181 is **granted**, the holding of abandonment is withdrawn, and the May 8, 2007 Notice of Abandonment is **vacated**. No petition fee has been or will be charged in connection with this matter. Office financial records will be corrected to show that small entity fees have been paid.

In future, petitioner is advised to make a clear assertion to small entity status.

Accordingly, the application file will be returned to the Office of Initial Patent Examination for further processing.

Telephone inquiries pertaining to this matter may be directed to the undersigned at (571) 272-3230.

Shirene Willis Brantley
Senior Petitions Attorney
Office of Petitions
Office of the Deputy Commissioner
for Patent Examination Policy

PTO/SB/27 (09-04)
Approved for use through 07/31/2006. OMB 0651-0031
U.S. Patent and Trademark Office: U.S DEPARTMENT OF COMMERCE
Under the Paperwork Reduction ACT of 1995, no persons are required to respond to collection of information unless it displays a valid OMB control number.

REQUEST FOR EXPEDITED EXAMINATION OF A DESIGN APPLICATION (37 CFR 1.155)

Application Number	29/243,557
Filing Date	11/28/05
First Named Inventor	Michael Murphy Wilson
Title	Ribbon Spinner Blade for Juicer
Atty Docket Number	

ADDRESS TO:
MAIL STOP EXPEDITED DESIGN
COMMISSIONER FOR PATENTS
P.O. Box 1450
Alexandria, VA 22313-1450

Approved 12/27/05
Jacqueline M. Stone, Director
Technology Center 1700

29/243,557

This is a request for expedited examination of a design application under 37 CFR 1.155.

NOTE: If the Request made by this form accompanies original application papers, include form PTO/SB/18 "Design Patent Application Transmittal" or its equivalent.

A preexamination search was conducted. The field of search was:

43/42 ; 43/42.13; 43/42.11 ; 43/42.19; 43/42.31

Related applications: 2923084; 3568351; 3981096; 4003154; 4155192; 4619068; 4800669; 4793089; 4926577; 4930247; 5481821; 6018901; 6243982; 5412900

If not previously filed for the above-identified application, the following items required by 37 CFR 1.155 are enclosed:

- Formal drawings (see 37 CFR 1.84).
- The fee set forth in 37 CFR 1.17(k).
- An information disclosure statement in compliance with 37 CFR 1.98.

Michael Murphy Wilson
Signature

12/23/05
Date

Michael Murphy Wilson
Typed or printed name

Registration Number, if applicable

479-409-6781
Telephone Number

WARNING: Information on this form may become public. Credit card information should not be included on this form. Provide credit card information and authorization on PTO-2038.

This collection of information is required by 37 CFR 1.155. The information is required to obtain or retain a benefit by the public which is to file (and by the USPTO to process) an application. Confidentiality is governed by 35 U.S.C. 122 and 37 CFR 1.11 and 1.14. This collection is estimated to take 6 minutes to complete, including gathering, preparing, and submitting the completed application form to the USPTO. Time will vary depending upon the individual case. Any comments on the amount of time you require to complete this form and/or suggestions for reducing this burden, should be sent to the Chief Information Officer, U.S. Patent and Trademark Office, U.S. Department of Commerce, P.O. Box 1450, Alexandria, VA 22313-1450. DO NOT SEND FEES OR COMPLETED FORMS TO THIS ADDRESS. SEND TO: Commissioner for Patents, P.O. Box 1450, Alexandria, VA 22313-1450.

If you need assistance in completing the form, call 1-800-PTO-9199 and select option 2.

UNITED STATES PATENT AND TRADEMARK OFFICE

Commissioner for Patents
United States Patent and Trademark Office
P.O. Box 1450
Alexandria, VA 22313-1450
www.uspto.gov

9-25-06

MICHAEL MURPHY WILSON, ED.D.
4414 STONECREST CIRCLE
SPRINGDALE AR 72762

In re Application of
WILSON, MICHAEL MURPHY
Appl. No.: 29/243,557
Filed: November 28, 2005
For: RIBBON SPINNER BLADE FOR LURES

PETITION DECISION

This is a decision on the petition under 37 CFR 1.181 received August 07, 2006, to withdraw holding of abandonment.

The petition is GRANTED.

USPTO records indicate that on 2/28/2006 Mr. Wilson was mailed two forms: a Notice of Allowance and Fee(s) Due and a Notice of Allowability.

The Notice of Allowability indicated drawing corrections were required and included comments from the examiner outlining the required correction. No drawing corrections were received within the required response period and on 6/19/2006 applicant was notified his application was abandoned. Applicant asserts he did not receive the Notice of Allowability indicating drawing corrections.

Applicant is prosecuting his own application. This application includes a granted request for expedited examination. Applicant paid his issue fee nine days after the Notice of Allowance and Fee(s) Due was mailed. These facts support the decision to grant applicant's petition. However, the most recent set of drawings are not suitable and will need to be corrected.

This application is being returned to the examiner for further action not inconsistent with this decision. Consequently the allowance is withdrawn so the examiner can communicate the specific drawing changes that need to be made. The examiner will contact you in due course.

Should there be any questions with regard to this letter please contact Joel Sincavage by letter addressed to the Director, Technology Center 1700/2900, P.O. Box 1450, Alexandria, VA 22313-1450, or by telephone at (571) 272-2610.

JMStone

Jacqueline M. Stone
Director, Technology Center 1700/2900

js

UNITED STATES PATENT AND TRADEMARK OFFICE

OFFICE

SERIAL NUMBER	FILING DATE	FIRST NAMED APPLICANT	ATTORNEY DOCKET NO.
29/243557	11/28/05		Wilson, M. Murphy

Michael Murphy
Wilso, ED.D.
4414 Stonecrest Circle
Springdale AR 72762

EXAMINER	
Oliver, Catheri	
ART UNIT	PAPER NUMBER
2914	

DATE MAILED: 3/6/07

NOTICE OF RESCINDED ABANDONMENT

☐ **In response to your communication filed** 2/23/07

☒ **Through inadvertence, a Notice of Abandonment was mailed in the above-identified application. The Notice of Abandonment is hereby rescinded.**

For **Manager, Publications Division**
Office of Patent Publication
571-272-4200

TO: Auto-reply fax to 479 927 1339 COMPANY:

I.R.E. IAP92
FEB 23 2007
PATENT & TRADEMARK OFFICE

Auto-Reply Facsimile Transmission

TO:	Fax Sender at 479 927 1339
Fax Information	
Date Received:	10/10/2006 11:16:04 PM [Eastern Daylight Time]
Total Pages:	2 (including cover page)

ADVISORY: This is an automatically generated return receipt confirmation of the facsimile transmission received by the Office. Please check to make sure that the number of pages listed as received in Total Pages above matches what was intended to be sent. Applicants are advised to retain this receipt in the unlikely event that proof of this facsimile transmission is necessary. Applicants are also advised to use the certificate of facsimile transmission procedures set forth in 37 CFR 1.8(a) and (b), 37 CFR 1.6(f). Trademark Applicants, also see the Trademark Manual of Examining Procedure (TMEP) section 306 et seq.

Received Cover Page ======>

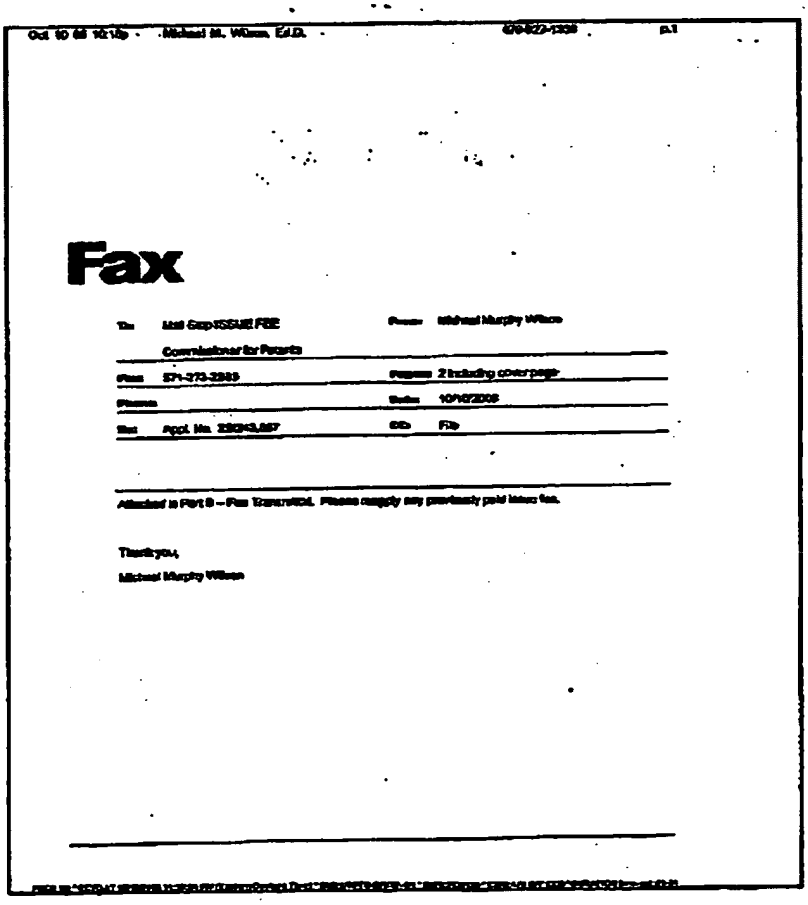

Oct 10 06 10:10p Michael M. Wilson, Ed.D. 479-927-1339 p.1

Fax

To: Mail Stop ISSUE FEE Commissioner for Patents
From: Michael Murphy Wilson
Fax: 571-273-2885
Pages: 2 including cover page
Phone:
Date: 10/10/2006
Re: Appl. No. 29/243,867
CC: File

Attached is Part B – Fee Transmittal. Please supply any previously paid issue fee.

Thank you,
Michael Murphy Wilson

BEST AVAILABLE COPY

SPE RESPONSE FOR CERTIFICATE OF CORRECTION

Paper No.: _____

DATE : 7-25-07

TO SPE OF : ART UNIT 2911

SUBJECT : Request for Certificate of Correction for Appl. No.: 29/243584 Patent No.: D540975

Please respond to this request for a certificate of correction within 7 days.

Please review the requested changes/corrections as shown in the **COCIN** document(s) in the IFW application image. No new matter should be introduced, nor should the scope or meaning of the claims be changed.

Please Check Drawing Figs.

Please complete the response (see below) and forward the completed response to scanning using document code **COCX**.

Certificates of Correction Branch

703-308-9390 ext. 117

Thank You For Your Assistance

The request for issuing the above-identified correction(s) is hereby:

Note your decision on the appropriate box.

☑ Approved	All changes apply.
☐ Approved in Part	Specify below which changes do not apply.
☐ Denied	State the reasons for denial below.

Comments: _____

CATHRON C. BROOKS
SUPERVISORY PATENT EXAMINER

SPE

2911
Art Unit

SPE RESPONSE FOR CERTIFICATE OF CORRECTION

Paper No.: _____

DATE : 12-11-06

TO SPE OF : ART UNIT 2911

SUBJECT : Request for Certificate of Correction on Patent No.: D530849 S (29/243595)

A response is requested with respect to the accompanying request for a certificate of correction.

Please complete this form and return with file, within 7 days to:
Palm location **7580, Certificates of Correction Branch – South Tower – 9A22**
If response is for an IFW, **return to employee (named below) via PUBSCofC Team in MADRAS.**
With respect to the change(s) requested, correcting Office and/or Applicant's errors, should the patent read as shown in the certificate of correction (COCIN)? No new matter should be introduced, nor should the scope or meaning of the claims be changed.

Drawings

Eva James

Thank You For Your Assistance

Certificates of Correction Branch
Tel. No. 703-305-8309

The request for issuing the above-identified correction(s) is hereby:
Note your decision on the appropriate box.

- ☑ **Approved** — **All** changes apply.
- ☐ **Approved in Part** — Specify below which changes **do not** apply.
- ☐ **Denied** — State the reasons for denial below.

Comments:

ALAN P. DOUGLAS
SUPERVISORY PATENT EXAMINER
TECHNOLOGY CENTER 2900
SPE

2911
Art Unit

UNITED STATES PATENT AND TRADEMARK OFFICE

Commissioner for Patents
United States Patent and Trademark Office
P.O. Box 1450
Alexandria, VA 22313-1450
www.uspto.gov

Iwan Rasa
Zollhausstrasse 16
CH-8505 Pfyn CH SWITZERLAND

COPY MAILED

NOV 26 2007

OFFICE OF PETITIONS

In re Application of :
Rasa : DECISION ON PETITION
Application No. 29/243,624 :
Filed: November 30, 2005 :
For: PEELER BLADE :

This is a decision on the petition to withdraw the holding of abandonment under 37 CFR 1.181, filed October 1, 2007.

This application was held abandoned for failure to timely submit a proper reply to the Notice to File Missing Parts (Notice) mailed December 27, 2005. The Notice required the submission of the required application filing fee ($100.00), surcharge ($65.00), search fee ($50.00), and examination fee (65.00). The Notice set a two month shortened statutory period of time for reply. An incomplete reply was submitted February 16, 2006. The incomplete reply established that the application fee ($100.00) had been submitted at the time the application was filed. A Notice of Incomplete Reply was mailed February 24, 2006. The Notice of Incomplete Reply indicated that the surcharge, search fee, and examination fee had not been submitted as required by the Notice to File Missing Parts. The Notice of Incomplete Reply did not set a new period of time for reply. A reply was received April 25, 2006 and included a two month extension of time fee ($225.00), the search fee ($50.00), the surcharge (65.00), and the examination fee (65.00). Notice of Abandonment was mailed August 1, 2007.

Petitioner asserts that a response to the Notice to File Missing Parts was timely submitted along with a petition for extension of time on April 25, 2006.

The original response filed April 25, 2006 has been located in the application file.

In view of the evidence thereof, the petition to withdraw the holding of abandonment is hereby **GRANTED**.

The Notice of Abandonment is hereby **VACATED** and the holding of abandonment is **WITHDRAWN**.

The application file is being forwarded to the Office of Patent Application Processing for further processing.

Telephone inquiries concerning this matter may be directed to the undersigned at (571) 272-3205.

Alesia M. Brown
Petitions Attorney
Office of Petitions

UNITED STATES PATENT AND TRADEMARK OFFICE

Commissioner for Patents
United States Patent and Trademark Office
P.O. Box 1450
Alexandria, VA 22313-1450
www.uspto.gov

FELLERS SNIDER BLANKENSHIP
BAILEY & TIPPENS
THE KENNEDY BUILDING
321 SOUTH BOSTON SUITE 800
TULSA OK 74103-3318

COPY MAILED

JUL 0 1 2009

OFFICE OF PETITIONS

In re Application of :
Fick :
Application No. 29/243,713 : ON PETITION
Filed: November 30, 2005 :
Attorney Docket No. 36099-DSG/ 66615/08-167 :

This is a decision on the petition under 37 CFR 1.137(b), filed May 14, 2009, to revive the above-identified application.

The petition is **dismissed**.

Any request for reconsideration of this decision must be submitted within TWO (2) MONTHS from the mail date of this decision. Extensions of time under 37 CFR 1.136(a) are permitted. The reconsideration request should include a cover letter entitled "Renewed Petition under 37 CFR 1.137(b)." Petitioner is advised that this is not a final agency decision.

This application became abandoned for failure to timely reply to the Notice of Allowability, mailed December 7, 2007, which set a three month period for reply. This application became abandoned on March 8, 2008 for failure to file corrected drawings. A Notice of Abandonment was mailed on March 31, 2008.

A grantable petition pursuant to 37 CFR 1.137(b) must be accompanied by:

(1) the required reply, unless previously filed;

(2) the petition fee as set forth in 37 CFR 1.17(m);

(3) a statement that the **entire** delay in filing the required reply from the due date for the reply until the filing of a grantable petition pursuant to 37 CFR 1.137(b) was unintentional. The Director may require additional information where there is a question whether the delay was unintentional; and

(4) any terminal disclaimer (and fee set forth in 37 CFR 1.20(d)) required pursuant to 37 CFR 1.137(d).

The instant petition does not satisfy requirement (4) above.

37 CFR 1.137(d)(1) requires that a petition under 37 CFR 1.137(b) be accompanied by a terminal disclaimer and fee in a design application, regardless of the design application's filing date. As this application is a design application, petitioner is required to submit a terminal disclaimer and required fee.

Regarding the statement of delay: It is not apparent whether the person signing the statement of unintentional delay was in a position to have firsthand or direct knowledge of the facts and circumstances of the delay at issue. Nevertheless, such statement is being treated as having been made as the result of a reasonable inquiry into the facts and circumstances of such delay. See 37 CFR 10.18(b) and Changes to Patent Practice and Procedure; Final Rule Notice, 62 Fed. Reg. 53131, 53178 (October 10, 1997), 1203 Off. Gaz. Pat. Office 63, 103 (October 21, 1997). In the event that such an inquiry has not been made, practitioner must make such an inquiry. If such inquiry results in the discovery that it is not correct that the entire delay in filing the required reply from the due date for the reply until the filing of a grantable petition pursuant to 37 CFR 1.137(b) was unintentional, practitioner must notify the Office.

The Revocation of Power of Attorney with New Power of Attorney and Change of Correspondence Address, filed May 14, 2009, has been entered and made of record. Please find enclosed Notices regarding the changes.

Further correspondence with respect to this matter should be addressed as follows:

By mail:
Mail Stop PETITION
Commissioner for Patents
Post Office Box 1450
Alexandria, VA 22313-1450

By hand:
U.S. Patent and Trademark Office
Customer Service Window, Mail Stop Petition
Randolph Building
401 Dulany Street
Alexandria, VA 22314

By FAX:
(571) 273-8300 - ATTN: Office of Petitions

Telephone inquiries concerning this decision should be directed to the undersigned at (571) 272-3230.

Shirene Willis Brantley
Senior Petitions Attorney
Office of Petitions

Enclosure: NOTICE REGARDING CHANGE OF POWER OF ATTORNEY

UNITED STATES PATENT AND TRADEMARK OFFICE

UNITED STATES DEPARTMENT OF COMMERCE
United States Patent and Trademark Office
Address: COMMISSIONER FOR PATENTS
P.O. Box 1450
Alexandria, Virginia 22313-1450
www.uspto.gov

APPLICATION NUMBER	FILING OR 371(C) DATE	FIRST NAMED APPLICANT	ATTY. DOCKET NO./TITLE
29/243,713	11/30/2005	Orval Lee Fick	36099-DSG

CONFIRMATION NO. 9538

POA ACCEPTANCE LETTER

22206
FELLERS SNIDER BLANKENSHIP
BAILEY & TIPPENS
THE KENNEDY BUILDING
321 SOUTH BOSTON SUITE 800
TULSA, OK 74103-3318

Date Mailed: 06/15/2009

NOTICE OF ACCEPTANCE OF POWER OF ATTORNEY

This is in response to the Power of Attorney filed 05/14/2009.

The Power of Attorney in this application is accepted. Correspondence in this application will be mailed to the above address as provided by 37 CFR 1.33.

/swbrantley/

Office of Data Management, Application Assistance Unit (571) 272-4000, or (571) 272-4200, or 1-888-786-0101

UNITED STATES PATENT AND TRADEMARK OFFICE

Commissioner for Patents
United States Patent and Trademark Office
P.O. Box 1450
Alexandria, VA 22313-1450
www.uspto.gov

FELLERS SNIDER BLANKENSHIP
BAILEY & TIPPENS
THE KENNEDY BUILDING
321 SOUTH BOSTON SUITE 800
TULSA OK 74103-3318

COPY MAILED

SEP 22 2009

OFFICE OF PETITIONS

In re Application of
Fick
Application No. 29/243,713
Filed: November 30, 2005
Attorney Docket No. 36099-DSG/ 66615/08-167

ON PETITION

This is a decision on the renewed petition under 37 CFR 1.137(b), filed July 7, 2009, to revive the above-identified application.

The petition is **granted**.

This application became abandoned for failure to timely reply to the Notice of Allowability, mailed December 7, 2007, which set a three month period for reply. This application became abandoned on March 8, 2008 for failure to file corrected drawings. A Notice of Abandonment was mailed on March 31, 2008.

The petition satisfies the requirements of 37 CFR 1.137(b) in that petitioner has supplied (1) the reply in the form of corrected drawings, (2) the petition fee of $810.00; (3) an acceptable statement of unintentional delay, and (4) a properly executed terminal disclaimer and the required $70.00 fee.

After the mailing of this decision, the application will be referred to the Office of Data Management for processing into a patent.

Telephone inquiries concerning this decision should be directed to the undersigned at (571) 272-3230.

Shirene Willis Brantley

Shirene Willis Brantley
Senior Petitions Attorney
Office of Petitions

UNITED STATES PATENT AND TRADEMARK OFFICE

Commissioner for Patents
United States Patent and Trademark Office
P.O. Box 1450
Alexandria, VA 22313-1450
www.uspto.gov

AKIN GUMP STRAUSS HAUER & FELD L.L.P.
ONE COMMERCE SQUARE
2005 MARKET STREET, SUITE 2200
PHILADELPHIA PA 19103

COPY MAILED

SEP 10 2007

OFFICE OF PETITIONS

In re Application of :
De Martiis : DECISION
Application No.: 29/243,722 :
Filed: November 30, 2005 :
Docket No.: 263-119US (R2-8467) :

This is a decision in response to the petition under 37 CFR 1.47(b), filed August 21, 2007.

The petition is hereby **DISMISSED**.

This petition is not subject to the provisions of 37 CFR 1.47 as once an executed oath or declaration has been filed and been placed in the application for examination, the provisions of 37 CFR 1.47 no longer apply.

The remedy for treating an inventor's refusal or unavailability to sign a supplemental declaration is a petition under 37 CFR 1.183 for a waiver of 37 CFR 1.67(a). *See* MPEP 603.

Any renewed petition must be accompanied by the petition fee required under 37 CFR 1.183.

Petitioner is given **TWO MONTHS** from the mailing date of this decision to reply, correcting the deficiencies noted herein. Any reply should be entitled "PETITION UNDER 37 CFR 1.183" and must include the required petition fee. Except, the reply may include a supplemental oath or declaration executed by the inventor.

Further correspondence with respect to this matter should be addressed as follows:

By mail: Mail Stop Petition
Commissioner for Patents
P.O. Box 1450
Alexandria, VA 22313-1450

By facsimile: (571) 273-8300

By hand:

U.S. Patent and Trademark Office
Customer Service Window
Mail Stop Petition
Randolph Building
401 Dulany Street
Alexandria, VA 22314

Telephone inquiries regarding this decision should be directed to the undersigned at (571) 272-3205.

Alesia M. Brown
Petitions Attorney
Office of Petitions

UNITED STATES PATENT AND TRADEMARK OFFICE

COMMISSIONER FOR PATENTS
UNITED STATES PATENT AND TRADEMARK OFFICE
P.O. BOX 1450
ALEXANDRIA, VA 22313-1450
www.uspto.gov

AKIN GUMP STRAUSS HAUER & FELD L.L.P.
ONE COMMERCE SQUARE
2005 MARKET STREET, SUITE 2200
PHILADELPHIA PA 19103

COPY MAILED

DEC 10 2007

OFFICE OF PETITIONS

In re Application of	:	
De Martiis	:	DECISION
Application No.: 29/243,722	:	
Filed: November 30, 2005	:	
Docket No.: 263-119US (R2-8467)	:	

This decision is in response to the petition renewed under 37 CFR 1.183 to waive the requirements of 37 CFR 1.67(a)(1), filed October 8, 2007.

In response to the Notice of Allowability mailed May 21, 2007, petitioners have submitted the instant request for acceptance of a supplemental declaration under 37 CFR 1.67 signed by less than all of the inventors named in the instant application.

37 CFR 1.67(a)(1) states:

> "Deficiencies or inaccuracies relating to all the inventors or applicants (§§ 1.42, 1.43, or § 1.47) may be corrected with a supplemental oath or declaration signed by all the inventors or applicants."

Petitioner alleges that Inventor De Martiis cannot be reached or located for presentation of the supplemental declaration.

In accordance with MPEP 603, "[w]hen an inventor who executed the original declaration is refusing or cannot be found to execute a required supplemental declaration, the requirement for that inventor to sign the supplemental declaration may be suspended or waived in accordance with 37 CFR 1.183. All available joint inventor(s) must sign the supplemental declaration on behalf of themselves, if appropriate, and on behalf of the nonsigning inventor. See MPEP §409.03(a)."

A grantable petition under 37 CFR 1.183 to waive the requirement of 37 CFR 1.67 requires petitioners to establish that this is an

extraordinary situation where justice requires waiver of the rules.

Petitioners herein have set forth the steps taken to locate Mr. De Martiis.

The supplemental declaration submitted herewith is not acceptable as it fails to set forth the title or position of the individual executing the declaration nor does it indicate that the individual is authorized to sign the declaration on behalf of the assignee.

Moreover, a review of the application history does not reveal that petitioner has complied with the provision under 37 CFR 3.73(b) which establishes an assignee's right to take action in an application.

The assignee's ownership may be established under 37 CFR 3.73(b) by submitting to the Office, in the Office file related to the matter in which action is sought to be taken: (A) documentary evidence of a chain of title from the original owner to the assignee (e.g., copy of an executed assignment submitted for recording) and a statement affirming that the documentary evidence of the chain of title from the original owner to the assignee was, or concurrently is, submitted for recordation pursuant to 37 CFR 3.11; or (B) a statement specifying, by reel and frame number, where such evidence is recorded in the Office.

Accordingly, the petition under 37 CFR 1.183 to waive the requirements of 37 CFR 1.67(a)(1) is hereby **DISMISSED**.

Any request for reconsideration of this decision must be submitted within TWO (2) MONTHS from the mail date of this decision. Extensions of time under 37 CFR 1.136(a) are permitted. The reconsideration request should include a cover letter entitled "Renewed Petition under 37 CFR 1.183." This is **not** a final agency action within the meaning of 5 U.S.C. § 704.

Further correspondence with respect to this matter should be addressed as follows:

By Mail: Mail Stop PETITION
Commissioner for Patents
P. O. Box 1450
Alexandria, VA 22313-1450

By hand: U. S. Patent and Trademark Office
Customer Service Window, Mail Stop Petitions
Randolph Building
401 Dulany Street
Alexandria, VA 22314

The centralized facsimile number is **(571) 273-8300.**

Telephone inquiries regarding this decision should be directed to the undersigned at (571) 272-3205.

Alesia M. Brown
Petitions Attorney
Office of Petitions

Enc.

PTO/SB/96 (12-07)
Approved for use through 12/31/2007. OMB 0651-0031
U.S. Patent and Trademark Office; U.S. DEPARTMENT OF COMMERCE
Under the Paperwork Reduction Act of 1995, no persons are required to respond to a collection of information unless it displays a valid OMB control number.

STATEMENT UNDER 37 CFR 3.73(b)

Applicant/Patent Owner: _____

Application No./Patent No.: _____ Filed/Issue Date: _____

Entitled:

_____, a _____
(Name of Assignee) (Type of Assignee, e.g., corporation, partnership, university, government agency, etc.)

states that it is:

1. ☐ the assignee of the entire right, title, and interest; or

2. ☐ an assignee of less than the entire right, title and interest
(The extent (by percentage) of its ownership interest is _____%)

in the patent application/patent identified above by virtue of either:

A. ☐ An assignment from the inventor(s) of the patent application/patent identified above. The assignment was recorded in the United States Patent and Trademark Office at Reel _____, Frame _____, or for which a copy thereof is attached.

OR

B. ☐ A chain of title from the inventor(s), of the patent application/patent identified above, to the current assignee as follows:

1. From: _____ To: _____
The document was recorded in the United States Patent and Trademark Office at
Reel _____, Frame _____, or for which a copy thereof is attached.

2. From: _____ To: _____
The document was recorded in the United States Patent and Trademark Office at
Reel _____, Frame _____, or for which a copy thereof is attached.

3. From: _____ To: _____
The document was recorded in the United States Patent and Trademark Office at
Reel _____, Frame _____, or for which a copy thereof is attached.

☐ Additional documents in the chain of title are listed on a supplemental sheet.

☐ As required by 37 CFR 3.73(b)(1)(i), the documentary evidence of the chain of title from the original owner to the assignee was, or concurrently is being, submitted for recordation pursuant to 37 CFR 3.11.

[NOTE: A separate copy (*i.e.*, a true copy of the original assignment document(s)) must be submitted to Assignment Division in accordance with 37 CFR Part 3, to record the assignment in the records of the USPTO. See MPEP 302.08]

The undersigned (whose title is supplied below) is authorized to act on behalf of the assignee.

_____ _____
Signature Date

_____ _____
Printed or Typed Name Telephone Number

_____
Title

This collection of information is required by 37 CFR 3.73(b). The information is required to obtain or retain a benefit by the public which is to file (and by the USPTO to process) an application. Confidentiality is governed by 35 U.S.C. 122 and 37 CFR 1.11 and 1.14. This collection is estimated to take 12 minutes to complete, including gathering, preparing, and submitting the completed application form to the USPTO. Time will vary depending upon the individual case. Any comments on the amount of time you require to complete this form and/or suggestions for reducing this burden, should be sent to the Chief Information Officer, U.S. Patent and Trademark Office, U.S. Department of Commerce, P.O. Box 1450, Alexandria, VA 22313-1450. DO NOT SEND FEES OR COMPLETED FORMS TO THIS ADDRESS. **SEND TO: Commissioner for Patents, P.O. Box 1450, Alexandria, VA 22313-1450.**

If you need assistance in completing the form, call 1-800-PTO-9199 and select option 2.

Privacy Act Statement

The **Privacy Act of 1974 (P.L. 93-579)** requires that you be given certain information in connection with your submission of the attached form related to a patent application or patent. Accordingly, pursuant to the requirements of the Act, please be advised that: (1) the general authority for the collection of this information is 35 U.S.C. 2(b)(2); (2) furnishing of the information solicited is voluntary; and (3) the principal purpose for which the information is used by the U.S. Patent and Trademark Office is to process and/or examine your submission related to a patent application or patent. If you do not furnish the requested information, the U.S. Patent and Trademark Office may not be able to process and/or examine your submission, which may result in termination of proceedings or abandonment of the application or expiration of the patent.

The information provided by you in this form will be subject to the following routine uses:

1. The information on this form will be treated confidentially to the extent allowed under the Freedom of Information Act (5 U.S.C. 552) and the Privacy Act (5 U.S.C 552a). Records from this system of records may be disclosed to the Department of Justice to determine whether disclosure of these records is required by the Freedom of Information Act.
2. A record from this system of records may be disclosed, as a routine use, in the course of presenting evidence to a court, magistrate, or administrative tribunal, including disclosures to opposing counsel in the course of settlement negotiations.
3. A record in this system of records may be disclosed, as a routine use, to a Member of Congress submitting a request involving an individual, to whom the record pertains, when the individual has requested assistance from the Member with respect to the subject matter of the record.
4. A record in this system of records may be disclosed, as a routine use, to a contractor of the Agency having need for the information in order to perform a contract. Recipients of information shall be required to comply with the requirements of the Privacy Act of 1974, as amended, pursuant to 5 U.S.C. 552a(m).
5. A record related to an International Application filed under the Patent Cooperation Treaty in this system of records may be disclosed, as a routine use, to the International Bureau of the World Intellectual Property Organization, pursuant to the Patent Cooperation Treaty.
6. A record in this system of records may be disclosed, as a routine use, to another federal agency for purposes of National Security review (35 U.S.C. 181) and for review pursuant to the Atomic Energy Act (42 U.S.C. 218(c)).
7. A record from this system of records may be disclosed, as a routine use, to the Administrator, General Services, or his/her designee, during an inspection of records conducted by GSA as part of that agency's responsibility to recommend improvements in records management practices and programs, under authority of 44 U.S.C. 2904 and 2906. Such disclosure shall be made in accordance with the GSA regulations governing inspection of records for this purpose, and any other relevant (*i.e.*, GSA or Commerce) directive. Such disclosure shall not be used to make determinations about individuals.
8. A record from this system of records may be disclosed, as a routine use, to the public after either publication of the application pursuant to 35 U.S.C. 122(b) or issuance of a patent pursuant to 35 U.S.C. 151. Further, a record may be disclosed, subject to the limitations of 37 CFR 1.14, as a routine use, to the public if the record was filed in an application which became abandoned or in which the proceedings were terminated and which application is referenced by either a published application, an application open to public inspection or an issued patent.
9. A record from this system of records may be disclosed, as a routine use, to a Federal, State, or local law enforcement agency, if the USPTO becomes aware of a violation or potential violation of law or regulation.

UNITED STATES PATENT AND TRADEMARK OFFICE

Commissioner for Patents
United States Patent and Trademark Office
P.O. Box 1450
Alexandria, VA 22313-1450
www.uspto.gov

PANITCH SCHWARZE BELISARIO & NADEL LLP
ONE COMMERCE SQUARE
2005 MARKET STREET, SUITE 2200
PHILADELPHIA PA 19103

COPY MAILED

SEP 26 2008

OFFICE OF PETITIONS

In re Application of :
De Martiis :
Application No.: 29/243,722 :
Filed: November 30, 2005 :
Docket No.: 263-119US (R2-8467) :

This decision is in response to the petition renewed under 37 CFR 1.183 to waive the requirements of 37 CFR 1.67(a)(1), filed February 7, 2008.

In response to the Notice of Allowability mailed May 21, 2007, petitioners have submitted the instant request for acceptance of a supplemental declaration under 37 CFR 1.67 signed by less than all of the inventors named in the instant application.

37 CFR 1.67(a)(1) states:

> "Deficiencies or inaccuracies relating to all the inventors or applicants (§§ 1.42, 1.43, or § 1.47) may be corrected with a supplemental oath or declaration signed by all the inventors or applicants."

Petitioners allege that Inventor De Martiis cannot be reached or located for presentation of the supplemental declaration.

In accordance with MPEP 603, "[w]hen an inventor who executed the original declaration is refusing or cannot be found to execute a required supplemental declaration, the requirement for that inventor to sign the supplemental declaration may be suspended or waived in accordance with 37 CFR 1.183. All available joint inventor(s) must sign the supplemental declaration on behalf of themselves, if appropriate, and on behalf of the nonsigning inventor. See MPEP §409.03(a)."

A grantable petition under 37 CFR 1.183 to waive the requirement of 37 CFR 1.67 requires petitioners to establish that this is an extraordinary situation where justice requires waiver of the rules.

Petitioners herein have set forth the steps taken to locate Mr. De Martiis. Under the circumstances, it is concluded that petitioners have demonstrated that this extraordinary situation warrants waiver of the rules.

In view of the circumstances outlined in the instant petition, the 37 CFR 1.67 declaration may be entered, despite the fact that the requirement that all of the inventors sign the supplemental declaration has not been satisfied.

Accordingly, the petition under 37 CFR 1.183 to waive the requirements of 37 CFR 1.67(a)(1) is hereby **GRANTED**.

Telephone inquiries regarding this decision should be directed to the undersigned at (571) 272-3205.

Alesia M. Brown
Petitions Attorney
Office of Petitions

UNITED STATES PATENT AND TRADEMARK OFFICE

Commissioner for Patents
United States Patent and Trademark Office
P.O. Box 1450
Alexandria, VA 22313-1450
www.uspto.gov

GANZ LAW, P.C.
P O BOX 2200
HILLSBORO, OR 97123

COPY MAILED

DEC 0 1 2006

OFFICE OF PETITIONS

In re Application of	:	
Wilkenfeld et al.	:	
Application No. 29/243,782	:	
Filing or 371(c) Date: 11/29/2005	:	
Attorney Docket Number:	:	DECISION
BCH-2.007.DES	:	ON PETITION

This is a decision on the Petition for Corrected Filing Date Under 37 CFR 1.10(c) and (d), filed August 16, 2006. The delay in treating this petition is regretted.

This Petition is hereby **granted**.

Petitioner alleges that the application was deposited in Express Mail service on November 29, 2005. In support of this assertion, the petition is accompanied by a copy of Express Mail label No. EV426392455US. A review of the Express Mail label, No. EV426392455US, reveals that the "Date In" indicated on the Express Mail label is November 29, 2005. The same Express Mail label number was placed on the original application papers located in the official file.

In view of the above, the petition is **granted**. No fee has been charged and none is due.

The application is being referred to the Office of Initial Patent Examination for correction of the filing date to November 29, 2005, and for the mailing of a Corrected Filing Receipt.

Telephone inquiries concerning this matter should be directed to the undersigned at (571) 272-3232.

Derek L. Woods
Attorney
Office of Petitions

UNITED STATES PATENT AND TRADEMARK OFFICE

Commissioner for Patents
United States Patent and Trademark Office
P.O. Box 1450
Alexandria, VA 22313-1450
www.uspto.gov

ABELMAN, FRAYNE & SCHWAB
666 THIRD AVENUE, 10TH FLOOR
NEW YORK NY 10017

COPY MAILED

MAR 19 2007

OFFICE OF PETITIONS

In re Application of	:	
Rudolphus Cornelis Henricus Daams	:	
Application No. 29/243812	:	
Filing or 371(c) Date: 11/29/2005	:	
Attorney Docket Number:	:	DECISION
207.219	:	ON PETITION

This is a decision on the "Petition Under 37 C.F.R. §1.10(c) to Correct Filing Date", filed November 22, 2006. The delay in treating this petition is regretted.

This Petition is hereby **granted**.

Petitioner alleges that Response to the Notice to File Missing Parts of Nonprovisional Application was deposited in Express Mail service on February 27, 2006. In support of this assertion, the petition is accompanied by a copy of Express Mail label No. ER059675440US. A review of the Express Mail label, No. ER059675440US, reveals that, while the "Date In" is blank, the the Express Mail label includes a Post Office Date Stamp dated February 27, 2006. The same Express Mail label number was placed on the Response located in the official file.

In view of the above, the petition is granted. No fee has been charged and none is due.

The application is being referred to Scanning Customer Support for correction of the filing date of the Response to February 27, 2006.

Petitioner is advised that the receipt date of correspondence filed during the prosecution of an application is not included on a Filing Receipt. As such, no corrected Filing Receipt will be mailed at this time.

Telephone inquiries concerning this matter should be directed to the undersigned at (571) 272-3232.

Derek L. Woods
Attorney
Office of Petitions

UNITED STATES PATENT AND TRADEMARK OFFICE

Commissioner for Patents
United States Patent and Trademark Office
P.O. Box 1450
Alexandria, VA 22313-1450
www.uspto.gov
DIW Feb-07

ABELMAN, FRAYNE & SCHWAB
666 THIRD AVENUE, 10TH FLOOR
NEW YORK NY 10017

COPY MAILED

FEB 0 9 2007

OFFICE OF PETITIONS

In re Application of :
Robert-Jan Willem Antoine Van :
Beuningen : ON PETITION
Application No. 29/243,813 :
Filed: 10 August, 2005 :
Atty Dckt No. H0008791-3026 :

This is a decision in reference to the petition filed on 22 November, 2006, which is treated as a petition filed under 37 CFR 1.10 concerning the papers filed in response to the Notice to File Missing Parts of Nonprovisional Application mailed on 27 December, 2005.

The petition is **granted** to the extent indicated.

On 29 November, 2005, the application was filed.

On 27 December, 2005, a Notice to File Missing Parts of Nonprovisional Application was mailed, setting a two (2) month period for reply.

Papers entitled "RESPONSE TO NOTICE TO FILE MISSING PARTS WITH CORRECTION OF INVENTORSHIP UNDER 37 C.F.R. § 1.48(F)" filed in response to the Notice were stamped with an "Office date" of 28 February, 2006.

Petitioner asserts that the reply filed in response to the above-mentioned Notice was deposited in Express Mail Post Office to Addressee Service in accordance with 37 CFR 1.10(c) on 27 February, 2006. In support, petitioner has provided a copy of the Express Mail Customer Label ER059675440US. (the same Express Mail number found on the first page of the reply). While the "date-in" on the Express Mail label has not been completed, the Express Mail label contains an official USPS postmark dated February 27, 2006.

As such, the showing of record is that the correct date of deposit in Express Mail is 27 February, 2006.

In view of the above, the petition is granted. No fee is required and none has been charged.

Although petitioner has requested a Corrected Filing Receipt reflecting this correction, the date of the receipt of the reply to a Notice to File Missing Parts is not printed on the filing receipt. Since this change would not be reflected the filing receipt, it is unnecessary to mail a Corrected Filing Receipt. However, the date of receipt of the reply will be corrected in Office records, as stated below.

The date of receipt of the reply to the Notice to File Missing Parts has been corrected to 27 February, 2006.

Telephone inquiries related to this decision should be directed to the undersigned at 571-272-3231.

D Wood

Douglas I. Wood
Senior Petitions Attorney
Office of Petitions

UNITED STATES PATENT AND TRADEMARK OFFICE

Commissioner for Patents
United States Patent and Trademark Office
P.O. Box 1450
Alexandria, VA 22313-1450
www.uspto.gov

1-17-06 wk

In re Application of :
Rick Kook :
Serial Number: 29/243,861 : DECISION
Filed: December 01, 2005 : ON
For: Insulated Attic Access Cover Folding Stairway : PETITION

This is in response to the request filed December 01, 2005, requesting expedited examination of a design application under 37 CFR 1.155.

37 CFR 1.155 establishes an expedited procedure for design applications. A design application may qualify for expedited examination provided the following requirements are met:

(A) A request for expedited examination is filed (Form PTO/SB/27 may be used);

(B) The design application is complete and it includes drawings in compliance with 37 CFR 1.84 (see 37 CFR 1.154 and MPEP § 1503 concerning the requirements for a complete design application);

(C) A statement is filed indicating that a preexamination search was conducted (a search made by a foreign patent office satisfies this requirement). The statement must also include a list of the field of search such as by U.S. Class and Subclass (including domestic patent documents, foreign patent documents and nonpatent literature);

(D) An information disclosure statement in compliance with 37 CFR 1.98 is filed;

(E) The basic design application filing fee set forth in 37 CFR 1 .16(f) is paid; and

(F) The fee for expedited examination set forth in 37 CFR 1.17(k) is paid.

If an application requesting expedited examination fails to comply with one or more of the requirements for expedited examination under 37 CFR 1.155, but the application is otherwise complete, the applicant will be promptly notified and required to comply with all requirements under 37 CFR 1.155 within a shortened time period extendable under 37 CFR 1.136(a). Unless all requirements under 37 CFR 1.155 are timely met, the application will await action in its regular turn.

In this case, applicant has not paid the fee for expedited examination as set forth in 37 CFR 1.17(k).

The Request is **Denied**.

Jacqueline M. Stone

Jacqueline Stone, Director
Technology Center 2900
Designs

JERRY LEE COPELAND
608 SOUTH FOREST LANE
BELMONT NC 28012

UNITED STATES PATENT AND TRADEMARK OFFICE

Commissioner for Patents
United States Patent and Trademark Office
P.O. Box 1450
Alexandria, VA 22313-1450
www.uspto.gov

EDGAR A. ZARINS
MASCO CORPORATION
21001 VAN BORN ROAD
TAYLOR, MI 48180

COPY MAILED

OCT 2 8 2008

OFFICE OF PETITIONS

In re Application of :
Kevin Artzner, et al. :
Application No. 29/243,899 : ON PETITION
Filed: December 1, 2005 :
Attorney Docket No. 445-3157-D :

This is a decision on the petition, filed March 12, 2008, which is being treated as a petition under 37 CFR 1.181 (no fee) requesting withdrawal of the holding of abandonment in the above-identified application.

The petition is **DISMISSED**.

This is also a decision on the petition under the unintentional provisions of 37 CFR 1.137(b), filed March 12, 2008, to revive the above-identified application.

The application became abandoned for failure to submit formal drawings in a timely manner in reply to the Notice of Allowability, mailed October 19, 2007, which set a period for reply of three (3) months. Accordingly, this application became abandoned on January 19, 2008.

The petition is also **DISMISSED**.

A grantable petition under 37 CFR 1.137(b) must be accompanied by: (1) the required reply, unless previously filed; (2) the petition fee as set forth in 37 CFR 1.17(m); (3) a statement that the entire delay in filing the required reply from the due date for the reply until the filing of a grantable petition pursuant to 37 CFR 1.137(b) was unintentional; and (4) any terminal disclaimer (and fee as set forth in 37 CFR 1.20(d)) required by 37 CFR 1.137(d). Where there is a question as to whether either the abandonment or the delay in filing a petition under 37 CFR 1.137 was unintentional, the Director may require additional information. See MPEP 711.03(c)(II)(C) and (D). The instant petition lacks item(s) (3) and (4).

With respect to Item 3:

The instant petition fails to contain the required statement of unintentional delay. 37 CFR 1.37(b) states that the entire delay in filing the required reply from the due date for the required reply until the filing of a grantable petition under 37 CFR 1.137(b) was unintentional. [NOTE: The United States Patent and Trademark Office may require additional information if there is a question as to whether either the abandonment or the delay in filing a petition under 37 CFR 1.137(b) was unintentional (MPEP 711.03(c), subsections (II)(C) and (D)).]

With respect to Item 4:

A terminal disclaimer and the $130 terminal disclaimer fee is required under 37 CFR 1.137(d) if the application is: (1) a design application, (2) a utility application filed before June 8, 1995, or (3) a plant application filed before June 8, 1995. The terminal disclaimer must dedicate to the public a terminal part of the term of any patent granted the application equivalent to the period of abandonment of the application, and must also apply to any patent granted on any application containing a specific reference under 35 U.S.C. 120, 121 or 365(c) to the application for which revival is sought.

Any request for reconsideration of this decision must be submitted within **TWO (2) MONTHS** from the mail date of this decision. Extensions of time under 37 CFR 1.136(a) are permitted. The reconsideration request should include a cover letter entitled "Renewed Petition under 37 CFR 1.137(b)." This is **not** a final agency action within the meaning of 5 U.S.C. § 704.

Further correspondence with respect to this matter should be addressed as follows:

By Mail:
Mail Stop PETITION
Commissioner for Patents
P. O. Box 1450
Alexandria, VA 22313-1450

By hand:
U. S. Patent and Trademark Office
Customer Service Window, Mail Stop Petitions
Randolph Building
401 Dulany Street
Alexandria, VA 22314

The centralized facsimile number is **(571) 273-8300.**

Telephone inquiries concerning this decision should be directed to the undersigned at (571) 272-1642.

/April M. Wise/
April M. Wise
Petitions Examiner
Office of Petitions

UNITED STATES PATENT AND TRADEMARK OFFICE

Commissioner for Patents
United States Patent and Trademark Office
P.O. Box 1450
Alexandria, VA 22313-1450
www.uspto.gov

EDGAR A. ZARINS
MASCO CORPORATION
21001 VAN BORN ROAD
TAYLOR, MI 48180

MAILED

FEB 0 2 2009

OFFICE OF PETITIONS

In re Application of :
Kevin Artzner, et al. :
Application No. 29/243,899 : DECISION ON PETITION
Filed: December 1, 2005 :
Attorney Docket No. 445-3157-D :

This is a decision on the renewed petition under the unintentional provisions of 37 CFR 1.137(b), filed November 13, 2008, to revive the above-identified application.

The application became abandoned for failure to submit formal drawings in a timely manner in reply to the Notice of Allowability, mailed October 19, 2007, which set a period for reply of three (3) months. Accordingly, this application became abandoned on January 18, 2008.

The petition satisfies the requirements of 37 CFR 1.137(b) in that petitioner has supplied (1) the reply in the form of corrected drawings, (2) the petition fee of $770; (3) an adequate statement of unintentional delay; and (4) a terminal disclaimer and fee as required by 37 CFR 1.137(d). Accordingly, the failure to timely file corrected drawings as required by the Notice of Allowability is accepted as being unintentionally delayed.

37 CFR 1.137(b)(3) requires a statement that "the entire delay in filing the required reply from the due date for the reply until the filing of a grantable petition pursuant to 37 CFR 1.137(b) was unintentional." Since the statement appearing in the petition varies from the language required by 37 CFR 1.137(b)(3), the statement is being construed as the required statement. Petitioner must notify the Office if this is **not** a correct reading of the statement appearing in the petition.

The petition is **GRANTED**.

Telephone inquiries concerning this decision should be directed to undersigned at (571) 272-1642.

This application is being referred to the Office of Data Management for further processing in accordance with this decision on petition.

/AMW/
April M. Wise
Petitions Examiner
Office of Petitions

UNITED STATES PATENT AND TRADEMARK OFFICE

Commissioner for Patents
United States Patent and Trademark Office
P.O. Box 1450
Alexandria, VA 22313-1450
www.uspto.gov

BIO INTELLECTUAL PROPERTY SERVICES (BIO IPS) LLC
8509 KERNON COURT
LORTON VA 22079

COPY MAILED

JAN 23 2008

OFFICE OF PETITIONS

In re Application of :
KEIGHTLEY, Kym John :
Application No. 29/243,915 : DECISION ON PETITION
Filed: December 2, 2005 :
Attorney Docket No. **12862US** :

This is a decision on the petition under the unintentional provisions of 37 CFR 1.137(b), filed May 7, 2007, to revive the above-identified application.

The petition is **GRANTED.**

This application became abandoned for failure to timely pay the issue fee and to submit corrected formal drawings on or before February 22, 2007, as required by the Notice of Allowance and Fee(s) Due mailed, November 22, 2006. Accordingly, the date of abandonment of this application is February 23, 2007.

The petition satisfies the requirements of 37 CFR 1.137(b) in that petitioner has supplied (1) the reply in the form of payment of the issue fee of $400; (2) the petition fee of $750, (3) a proper statement of unintentional delay and (4) a terminal disclaimer and fee as required by 37 CFR 1.137(b).

The terminal disclaimer filed May 7, 2007 has been entered and made of record. Any continuing application filed from this application must contain a copy of the terminal disclaimer. The copy of the terminal disclaimer must be filed with a cover letter requesting the terminal disclaimer be recorded on the continuing application. A copy of this decision should be attached to the cover letter.

The drawing(s) have been approved by the USPTO draftsperson.

Telephone inquiries concerning this decision should be directed to Monica A. Graves at (571) 272-7253.

This application is being referred to the Office of Data Management for processing into a patent.

Sherry D. Brinkley
Petitions Examiner
Office of Petitions

UNITED STATES PATENT AND TRADEMARK OFFICE

Commissioner for Patents
United States Patent and Trademark Office
P.O. Box 1450
Alexandria, VA 22313-1450
www.uspto.gov

BIO INTELLECTUAL PROPERTY SERVICES (BIO IPS) LLC
8509 KERNON COURT
LORTON VA 22079

COPY MAILED

JAN 23 2008

OFFICE OF PETITIONS

In re Application of :
KEIGHTLEY, Kym John :
Application No. 29/243,918 : DECISION ON PETITION
Filed: December 2, 2005 :
Attorney Docket No. **12865US** :

This is a decision on the petition under the unintentional provisions of 37 CFR 1.137(b), filed May 7, 2007, to revive the above-identified application.

The petition is **GRANTED.**

This application became abandoned for failure to timely pay the issue fee and to submit corrected formal drawings on or before February 15, 2007, as required by the Notice of Allowance and Fee(s) Due mailed, November 15, 2006. Accordingly, the date of abandonment of this application is February 16, 2007.

The petition satisfies the requirements of 37 CFR 1.137(b) in that petitioner has supplied (1) the reply in the form of payment of the issue fee of $400; (2) the petition fee of $750, (3) a proper statement of unintentional delay and (4) a terminal disclaimer and fee as required by 37 CFR 1.137(b).

The terminal disclaimer filed May 7, 2007 has been entered and made of record. Any continuing application filed from this application must contain a copy of the terminal disclaimer. The copy of the terminal disclaimer must be filed with a cover letter requesting the terminal disclaimer be recorded on the continuing application. A copy of this decision should be attached to the cover letter.

The drawing(s) have been approved by the USPTO draftsperson.

Telephone inquiries concerning this decision should be directed to Monica A. Graves at (571) 272-7253.

This application is being referred to the Office of Data Management for processing into a patent.

Sherry D. Brinkley
Petitions Examiner
Office of Petitions

UNITED STATES PATENT AND TRADEMARK OFFICE

Commissioner for Patents
United States Patent and Trademark Office
P.O. Box 1450
Alexandria, VA 22313-1450
www.uspto.gov

WILLIAM J. SAPONE
COLEMAN SUDOL SAPONE P.C.
714 COLORADO AVENUE
BRIDGE PORT, CT 06605

COPY MAILED

AUG 0 1 2007

OFFICE OF PETITIONS

In re Application of :
Yasushi Shigeta :
Application No. 29/243,956 : ON PETITION
Filed: December 2, 2005 :
Attorney Docket No. 610/9-2170 :

This is a decision on the petition filed March 23, 2007 under 37 CFR 1.137(b), to revive the above-identified application.

The petition is **GRANTED.**

The above-identified application became abandoned for failure to submit the Issue fee in a timely manner in reply to the Notice of Allowance mailed December 11, 2006, which set a statutory period for reply of three (3) months. Accordingly, the above-identified application became abandoned on March 12, 2006.

The petition satisfies the conditions for revival pursuant to the provisions of 37 CFR 1.137(b) in that (1) the reply in the form of payment of the Issue fee; (2) the petition fee; and (3) the required statement of unintentional delay have been received. Accordingly, the issue fee is accepted as having been unintentionally delayed.

Telephone inquiries concerning this decision should be directed to the undersigned at (571) 272-3210.

This matter is being referred to the Publishing Division for further processing.

Irvin Dingle
Petitions Examiner
Office of Petitions

PTO/SB/27 (05-03)
Approved for use through 04/30/2003. OMB 0651-0031
U.S. Patent and Trademark Office; U.S. DEPARTMENT OF COMMERCE
Under the Paperwork Reduction Act of 1995, no persons are required to respond to a collection of information unless it displays a valid OMB control number.

REQUEST FOR EXPEDITED EXAMINATION OF A DESIGN APPLICATION (37 CFR 1.155)

Application Number	TO BE ASSIGNED
Filing Date	December 5 2005
First Named Inventor	Jeff Rasmussen
Title	Portion Of A Shoe Upper
Atty Docket Number	015127.00594

112949 U.S.PTO
29/243985
12/05/05

HAND DELIVER TO THE DESIGN GROUP DIRECTOR'S OFFICE
-or- ADDRESS TO:
MAIL STOP EXPEDITED DESIGN
COMMISSIONER FOR PATENTS
P.O. Box 1450
Alexandria, VA 22313-1450

This is a request for expedited examination of a design application under 37 CFR 1.155.

NOTE: If the Request made by this form accompanies original application papers, include form PTO/SB/18 "Design Patent Application Transmittal" or its equivalent.

Approved Jacqueline M. Stone 4-6-06
Jacqueline M. Stone, Director
Technology Center 1700/2900

A preexamination search was conducted. The field of search was:

D2/ 896, 902, 907, 908, 943, 944, 945, 946, 969, 972, 973, 974

12/06/2005 STEUEL1 00000065 190733 29243985

04 FC:1802 900.00 DA

Related applications: _____

If not previously filed for the above-identified application, the following items required by 37 CFR 1.155 are enclosed:

Formal drawings (see 37 CFR 1.84).

The fee set forth in 37 CFR 1.17(k).

An information disclosure statement in compliance with 37 CFR 1.98.

December 5, 2005
Date

Signature

202-824-3000
Telephone Number

David R. Gerk-Registration No. 56,901
Typed or printed name

WARNING: Information on this form may become public. Credit card information should not be included on this form. Provide credit card information and authorization on PTO-2038.

This collection of information is required by 37 CFR 1.155. The information is required to obtain or retain a benefit by the public which is to file (and by the USPTO to process) an application. Confidentiality is governed by 35 U.S.C. 122 and 37 CFR 1.14. This collection is estimated to take 6 minutes to complete, including gathering, preparing, and submitting the completed application form to the USPTO. Time will vary depending upon the individual case. Any comments on the amount of time you require to complete this form and/or suggestions for reducing this burden, should be sent to the Chief Information Officer, U.S. Patent and Trademark Office, U.S. Department of Commerce, P.O. Box 1450, Alexandria, VA 22313-1450. DO NOT SEND FEES OR COMPLETED FORMS TO THIS ADDRESS. SEND TO: Mail Stop Expedited Design, Commissioner for Patents, P.O. Box 1450, Alexandria, VA 22313-1450.

If you need assistance in completing the form, call 1-800-PTO-9199 and select option 2.

UNITED STATES PATENT AND TRADEMARK OFFICE

Commissioner for Patents
United States Patent and Trademark Office
P.O. Box 1450
Alexandria, VA 22313-1450
www.uspto.gov

OLIFF & BERRIDGE, PLC
P.O. BOX 19928
ALEXANDRIA VA 22320

COPY MAILED

MAR 30 2007

OFFICE OF PETITIONS

In re Patent No. D534,616
Issued: January 2, 2007
Application No. 29/243,997
Filed: December 5, 2005
Attorney Docket Number: 125753

ON PETITION

This is a decision on the petition for correction of assignee's name, filed January 23, 2007. The petition is treated under 37 CFR 3.81(b)[1]

The petition is **GRANTED**.

Petitioner states that the assignee is FUJI KOGYO CO., LTD and that the failure to include the correct assignee name on the Fee(s) Transmittal form PTOL-85(b) was an inadvertent error on the part of the applicant's representative. Accordingly, petitioner requests that a certificate of correction be issued to reflect the correct assignee on the front page of the Letters Patent.

37 CFR 3.81(b), effective June 25, 2004, reads:

> *After payment of the issue fee:* Any request for issuance of an application in the name of the assignee submitted after the date of payment of the issue fee, and any request for a patent to be corrected to state the name of the assignee, must state that the assignment was submitted for recordation as set forth in § 3.11 before issuance of the patent, and must include a request for a certificate of correction under § 1.323 of this chapter (accompanied by the fee set forth in § 1.20(a) and the processing fee set forth in § 1.17(i) of this chapter.

The request is accompanied by a certificate of correction (and fee) as required by 3.81(b). Further, Office assignment records reflect that FUJI KOGYO CO., LTD is the assignee of record. Accordingly, as the request complies with the provisions of 37 CFR 3.81(b), it would be appropriate for a certificate of correction to issue.

---

[1] *See* Official Gazette of June 22, 2004

Inquiries concerning this decision should be directed to the undersigned at (571) 272-3212. Any questions concerning the issuance of a certificate of correction should be directed to the Certificates of Correction Branch at (703) 305-8309.

This matter is being referred to the Certificates of Correction Branch for issuance of a certificate of correction.

Patricia Faison-Ball
Senior Petitions Attorney
Office of Petitions

UNITED STATES PATENT AND TRADEMARK OFFICE

Commissioner for Patents
United States Patent and Trademark Office
P.O. Box 1450
Alexandria, VA 22313-1450
www.uspto.gov

Steven E. Feldman
12 East 41st Street
New York, NY 10017

COPY MAILED

JUN 17 2008

OFFICE OF PETITIONS

In re Application of :
George Chandler :
Application No. 29/244,018 :
Filed: December 1, 2005 :
Attorney Docket No. :

DECISION ON PETITION

This is a decision on the petition under the unintentional provisions of 37 CFR 1.137(b), filed February 19, 2008, to revive the above-identified application.

The petition is **DISMISSED**.

Any request for reconsideration of this decision must be submitted within TWO (2) MONTHS from the mail date of this decision. Extensions of time under 37 CFR 1.136(a) are permitted. The reconsideration request should include a cover letter entitled "Renewed Petition under 37 CFR 1.137(b)." This is **not** a final agency action within the meaning of 5 U.S.C. § 704.

This application became abandoned for failure to timely pay the issue fees on or before September 5, 2007, as required by the Notice of Allowance and Fee(s) Due, mailed June 5, 2007. Accordingly, the date of abandonment of this application is September 6, 2007. A Notice of Abandonment was mailed on September 28, 2007.

A grantable petition under 37 CFR 1.137(b) must be accompanied by: (1) the required reply, unless previously filed; (2) the petition fee as set forth in 37 CFR 1.17(m); (3) a statement that the entire delay in filing the required reply from the due date for the reply until the filing of a grantable petition pursuant to 37 CFR 1.137(b) was unintentional; and **(4) any terminal disclaimer (and fee as set forth in 37 CFR 1.20(d)) required by 37 CFR 1.137(d)**. Where there is a question as to whether either the abandonment or the delay in filing a petition under 37 CFR 1.137 was unintentional, the Director may require additional information. See MPEP 711.03(c)(II)(C) and (D). The instant petition lacks item (4).

There is no indication that the person signing the petition was ever given a power of attorney or authorization of agent to prosecute the application. However, in accordance with 37 CFR 1.34(a), the signature of Richard B. Klar appearing on the petition shall constitute a representation to the United States Patent and Trademark Office that he is authorized to represent the particular party in whose behalf he acts.

It is also noted that the terminal disclaimer under 37 CFR 1.137(d), filed February 19, 2008 cannot be accepted since it is not signed by an attorney or agent of record.

37 CFR 1.321(b) states:

> An applicant or assignee may disclaim or dedicate to the public the entire term, or any terminal part of the term, of a patent to be granted. Such terminal disclaimer is binding upon the grantee and its successors or assigns. The terminal disclaimer, to be recorded in the Patent and Trademark Office, must:
>
> (1) Be signed:
> (i) By the applicant, or
> (ii) If there is an assignee of record of an undivided part interest, by the applicant and such assignee, or
> (iii) If there is an assignee of record of the entire interest, by such assignee, or
> (iv) By an attorney or agent of record;
> (2) Specify the portion of the term of the patent being disclaimed;
> (3) State the present extent of the applicant's or assignee's ownership interest in the patent to be granted; and
> (4) Be accompanied by the fee set forth in § 1.20(d).

In view of the above a terminal disclaimer signed by the attorney of record or an appropriate power of attorney or authorization of agent must be submitted.

Further correspondence with respect to this matter should be addressed as follows:

By Mail:
Mail Stop PETITION
Commissioner for Patents
P. O. Box 1450
Alexandria, VA 22313-1450

By hand:
U. S. Patent and Trademark Office
Customer Service Window, Mail Stop Petitions
Randolph Building
401 Dulany Street
Alexandria, VA 22314

The centralized facsimile number is **(571) 273-8300.**

Telephone inquiries concerning this decision should be directed to Kimberly Inabinet at (571) 272-4618.

Carl Friedman
Petitions Examiner
Office of Petitions

Attachment: Statement under 3.73(b)

PTO/SB/96 (01-08)
Approved for use through 06/30/2008. OMB 0651-0031
U.S. Patent and Trademark Office; U.S. DEPARTMENT OF COMMERCE
Under the Paperwork Reduction Act of 1995, no persons are required to respond to a collection of information unless it displays a valid OMB control number.

STATEMENT UNDER 37 CFR 3.73(b)

Applicant/Patent Owner: _____

Application No./Patent No.: _____ Filed/Issue Date: _____

Entitled:

_____, a _____
(Name of Assignee) (Type of Assignee, e.g., corporation, partnership, university, government agency, etc.)

states that it is:

1. ☐ the assignee of the entire right, title, and interest; or

2. ☐ an assignee of less than the entire right, title and interest
(The extent (by percentage) of its ownership interest is_____ %)

in the patent application/patent identified above by virtue of either:

A. ☐ An assignment from the inventor(s) of the patent application/patent identified above. The assignment was recorded in the United States Patent and Trademark Office at Reel _____, Frame _____, or for which a copy thereof is attached.

OR

B. ☐ A chain of title from the inventor(s), of the patent application/patent identified above, to the current assignee as follows:

1. From: _____ To: _____
The document was recorded in the United States Patent and Trademark Office at
Reel _____, Frame _____, or for which a copy thereof is attached.

2. From: _____ To: _____
The document was recorded in the United States Patent and Trademark Office at
Reel _____, Frame _____, or for which a copy thereof is attached.

3. From: _____ To: _____
The document was recorded in the United States Patent and Trademark Office at
Reel _____, Frame _____, or for which a copy thereof is attached.

☐ Additional documents in the chain of title are listed on a supplemental sheet.

☐ As required by 37 CFR 3.73(b)(1)(i), the documentary evidence of the chain of title from the original owner to the assignee was, or concurrently is being, submitted for recordation pursuant to 37 CFR 3.11.

[NOTE: A separate copy (*i.e.*, a true copy of the original assignment document(s)) must be submitted to Assignment Division in accordance with 37 CFR Part 3, to record the assignment in the records of the USPTO. See MPEP 302.08]

The undersigned (whose title is supplied below) is authorized to act on behalf of the assignee.

_____	_____
Signature	Date
_____	_____
Printed or Typed Name	Telephone Number
_____	
Title	

This collection of information is required by 37 CFR 3.73(b). The information is required to obtain or retain a benefit by the public which is to file (and by the USPTO to process) an application. Confidentiality is governed by 35 U.S.C. 122 and 37 CFR 1.11 and 1.14. This collection is estimated to take 12 minutes to complete, including gathering, preparing, and submitting the completed application form to the USPTO. Time will vary depending upon the individual case. Any comments on the amount of time you require to complete this form and/or suggestions for reducing this burden, should be sent to the Chief Information Officer, U.S. Patent and Trademark Office, U.S. Department of Commerce, P.O. Box 1450, Alexandria, VA 22313-1450. DO NOT SEND FEES OR COMPLETED FORMS TO THIS ADDRESS. **SEND TO: Commissioner for Patents, P.O. Box 1450, Alexandria, VA 22313-1450.**

If you need assistance in completing the form, call 1-800-PTO-9199 and select option 2.

Privacy Act Statement

The **Privacy Act of 1974 (P.L. 93-579)** requires that you be given certain information in connection with your submission of the attached form related to a patent application or patent. Accordingly, pursuant to the requirements of the Act, please be advised that: (1) the general authority for the collection of this information is 35 U.S.C. 2(b)(2); (2) furnishing of the information solicited is voluntary; and (3) the principal purpose for which the information is used by the U.S. Patent and Trademark Office is to process and/or examine your submission related to a patent application or patent. If you do not furnish the requested information, the U.S. Patent and Trademark Office may not be able to process and/or examine your submission, which may result in termination of proceedings or abandonment of the application or expiration of the patent.

The information provided by you in this form will be subject to the following routine uses:

1. The information on this form will be treated confidentially to the extent allowed under the Freedom of Information Act (5 U.S.C. 552) and the Privacy Act (5 U.S.C 552a). Records from this system of records may be disclosed to the Department of Justice to determine whether disclosure of these records is required by the Freedom of Information Act.
2. A record from this system of records may be disclosed, as a routine use, in the course of presenting evidence to a court, magistrate, or administrative tribunal, including disclosures to opposing counsel in the course of settlement negotiations.
3. A record in this system of records may be disclosed, as a routine use, to a Member of Congress submitting a request involving an individual, to whom the record pertains, when the individual has requested assistance from the Member with respect to the subject matter of the record.
4. A record in this system of records may be disclosed, as a routine use, to a contractor of the Agency having need for the information in order to perform a contract. Recipients of information shall be required to comply with the requirements of the Privacy Act of 1974, as amended, pursuant to 5 U.S.C. 552a(m).
5. A record related to an International Application filed under the Patent Cooperation Treaty in this system of records may be disclosed, as a routine use, to the International Bureau of the World Intellectual Property Organization, pursuant to the Patent Cooperation Treaty.
6. A record in this system of records may be disclosed, as a routine use, to another federal agency for purposes of National Security review (35 U.S.C. 181) and for review pursuant to the Atomic Energy Act (42 U.S.C. 218(c)).
7. A record from this system of records may be disclosed, as a routine use, to the Administrator, General Services, or his/her designee, during an inspection of records conducted by GSA as part of that agency's responsibility to recommend improvements in records management practices and programs, under authority of 44 U.S.C. 2904 and 2906. Such disclosure shall be made in accordance with the GSA regulations governing inspection of records for this purpose, and any other relevant (*i.e.*, GSA or Commerce) directive. Such disclosure shall not be used to make determinations about individuals.
8. A record from this system of records may be disclosed, as a routine use, to the public after either publication of the application pursuant to 35 U.S.C. 122(b) or issuance of a patent pursuant to 35 U.S.C. 151. Further, a record may be disclosed, subject to the limitations of 37 CFR 1.14, as a routine use, to the public if the record was filed in an application which became abandoned or in which the proceedings were terminated and which application is referenced by either a published application, an application open to public inspection or an issued patent.
9. A record from this system of records may be disclosed, as a routine use, to a Federal, State, or local law enforcement agency, if the USPTO becomes aware of a violation or potential violation of law or regulation.

UNITED STATES PATENT AND TRADEMARK OFFICE

Commissioner for Patents
United States Patent and Trademark Office
P.O. Box 1450
Alexandria, VA 22313-1450
www.uspto.gov

Steven E. Feldman
Feldman Law Group, P.C.
12 East 41st Street
New York, NY 10017

COPY MAILED

AUG 19 2008

In re Application of :
George Chandler :
Application No. 29/244,018 : DECISION ON PETITION
Filed: December 1, 2005 :
Attorney Docket No. :

This is a decision on the renewed petition under the unintentional provisions of 37 CFR 1.137(b), filed June 30, 2008, to revive the above-identified application.

The petition is **GRANTED**.

This application became abandoned for failure to timely pay the issue fees on or before September 5, 2007, as required by the Notice of Allowance and Fee(s) Due, mailed June 5, 2007. Accordingly, the date of abandonment of this application is September 6, 2007. A Notice of Abandonment was mailed on September 28, 2007.

The petition decision mailed June 17, 2008 dismissed the petition filed February 19, 2008 for failure to provide a proper terminal disclaimer.

The renewed petition includes a proper terminal disclaimer.

The petition satisfies the requirements of 37 CFR 1.137(b) in that petitioner has supplied (1) the reply in the form of payment of the issue fee of $400, (2) the petition fee of $770, (3) a proper statement of unintentional delay and, (4) a terminal disclaimer and fee as required by 37 CFR 1.137(d). Accordingly, the issue fee is accepted as being unintentionally delayed.

The terminal disclaimer is accepted and has been made of record. Any continuing application filed from this application must contain a copy of the terminal disclaimer. The copy of the terminal disclaimer must be filed with a cover letter requesting the terminal disclaimer be recorded on the continuing application. A copy of this decision should be attached to the cover letter.

Telephone inquiries concerning this decision should be directed to Kimberly Inabinet at (571) 272-4618.

This application is being referred to the Office of Data Management for further processing into a patent.

Carl Friedman
Petitions Examiner
Office of Petitions

UNITED STATES PATENT AND TRADEMARK OFFICE

COMMISSIONER FOR PATENTS
UNITED STATES PATENT AND TRADEMARK OFFICE
P.O. BOX 1450
ALEXANDRIA, VA 22313-1450
www.uspto.gov

JAMES P. HANRATH
191 NORTH WACKER DRIVE
SUITE 1800
CHICAGO, IL 60606

COPY MAILED

JUN 15 2007

OFFICE OF PETITIONS

In re Application of
Sungsuk Kim et. al.
Application No. 29/244,027
Filed: December 1, 2005
Attorney Docket No. 187170/US/DJB/VEJ

ON PETITION

This is a decision on the petition under 37 CFR 1.137(b) to revive the above-identified application, filed January 24, 2007.

The application became abandoned for failure to pay the issue fee on or before January 3, 2007. This decision precedes the mailing of a Notice of Abandonment. On January 24, 2007, the requisite issue fee, a terminal disclaimer and the present petition were filed.

The petition is found to comply with the requirements of 37 CFR 1.137(b). Accordingly, the petition is GRANTED.

The terminal disclaimer filed January 24, 2007 has been entered and made of record.

The application is being referred to Publishing Division.

Telephone inquires related to this decision should be directed to the undersigned at (571) 272-3204. Telephone inquiries related to processing at Publishing Division should be directed to (571) 272-4200.

Sherry D. Brinkley
Petitions Examiner
Office of Petitions

UNITED STATES PATENT AND TRADEMARK OFFICE

Commissioner for Patents
United States Patent and Trademark Office
P.O. Box 1450
Alexandria, VA 22313-1450
www.uspto.gov

ALSTON & BIRD LLP
BANK OF AMERICA PLAZA
101 SOUTH TRYON STREET, SUITE 4000
CHARLOTTE NC 28280-4000

COPY MAILED

JAN 0 8 2008

OFFICE OF PETITIONS

In re Application of :
Mitchell B. Gelman :
Application No. 29/244,032 : ON PETITION
Filed: December 2, 2005 :
Attorney Docket No. 040394/303318 :

This is a decision on the petition under 37 CFR 1.182 to accept omitted declaration sheets naming additional inventors, filed on July 6, 2007, which is being treated as a petition requesting that the requirement of 37 CFR 1.48(a) be waived or suspended pursuant to 37 CFR 1.183 in order to include the include two missing signature sheets of the originally filed declaration. The petition was accompanied by copies of the two missing signature sheets and the petition fee.

The petition is dismissed.

The petition states that all nine inventors properly executed individual declaration signature sheets. The error occurred when two of the signature sheets, for Eric A. Breitbard and Melanie McKinley McLaughine, were inadvertently left out during filing of the declaration papers. Thus, at the time of filing of the application only seven of the nine inventors were listed. The instant petition seeks to correct the inventorship to include all nine inventors. 37 CFR 1.48 specifically provides for correction of inventorship of a patent application.

37 CFR 1.183 provides that in an extraordinary situation, when justice requires, any requirement of the regulations which is not a requirement of the statutes may be suspended or waived by the Commissioner. 37 CFR 1.48(a) indicates that if an inventive entity is set forth in error in an executed 1.63 oath or declaration in a nonprovisional application, and such error arose without any deceptive intention on the part of the person named as an inventor in error or on the part of the person who through error was not named as an inventor, the inventorship may be amended to name only the actual inventor or inventors.

37 CFR 1.48(a)(1) requires a request to correct inventorship that sets for the desired inventorship change. The petition is deemed to meet this requirement.

37 CFR 1.48(a)(2) requires a statement from each person being added as an inventor and from each person being deleted as an inventor that the error in inventorship occurred without deceptive intention on his or her part. Since all nine inventors properly executed the declaration

there is no error on the part of the persons who were not named as an inventor. Petitioner makes it clear the error in failing to name all the inventors was not due to any inaction of the inventors but was due to the failure to include all the papers of the declaration at the time of filing of the application. Therefore the 37 CFR 1.48(a)(2) cannot be met since there was no error on the part of the inventors. This is deemed an extraordinary situation under 37 CFR 1.183 and it is seen fair to waive the requirements of 37 CFR 1.48(a)(2).

37 CFR 1.48(a)(3) requires an oath or declaration by the actual inventor or inventors as required under 1.63 or as permitted under 1.42, 1.43 or 1.47. The petition included only the signature page of the original declaration of the two missing inventors rather than complete declarations. Since these signature pages were signed as part of a complete 1.63 declaration, the requirement for 37 CFR 1.48(a)(3) is waived under 37 CFR 1.183.

37 CFR 1.48(a)(4) requires the processing fee set forth in 1.17(i). The petition included a fee of $400, the required fee is $130 so this requirement is met. The overpayment of $270 will be credited to applicants' deposit account.

37 CFR 1.48(a)(5) requires that if an assignment has been executed by any of the original named inventors, the written consent of the assignee. The original named inventors did assign the application but no such consent was provided. For this reason, the petition is dismissed.

Any request for reconsideration of this decision must be submitted within TWO (2) MONTHS from the mail date of this decision. Extensions of time under 37 CFR 1.136(a) are permitted. The reconsideration request should include a cover letter entitled "Renewed Petition under 37 CFR 1.137(b)." This is not a final agency action within the meaning of 5 U.S.C. § 704.

Further correspondence with respect to this matter should be addressed as follows:

By Mail: Mail Stop PETITION
Commissioner for Patents
P. O. Box 1450
Alexandria, VA 22313-1450

By hand: U. S. Patent and Trademark Office
Customer Service Window, Mail Stop Petitions
Randolph Building
401 Dulany Street
Alexandria, VA 22314

The centralized facsimile number is (571) 273-8300.

Telephone inquiries regarding this communication should be directed to Carl Friedman at (571) 272-6842.

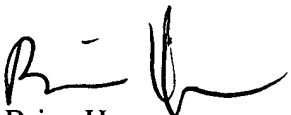

Brian Hearn
Petitions Examiner
Office of Petitions

UNITED STATES PATENT AND TRADEMARK OFFICE

Commissioner for Patents
United States Patent and Trademark Office
P.O. Box 1450
Alexandria, VA 22313-1450
www.uspto.gov

ALSTON & BIRD LLP
BANK OF AMERICA PLAZA
101 SOUTH TRYON STREET, SUITE 4000
CHARLOTTE NC 28280-4000

COPY MAILED

JUL 17 2008

OFFICE OF PETITIONS

In re Application of :
Mitchell B. Gelman et al. :
Application No. 29/244,032 : ON PETITION
Filed: December 2, 2005 :
Attorney Docket No. 040394/303318 :

This is a decision on the renewed petition under 37 CFR 1.137(b) to correct inventorship, filed on April 30, 2008, which is being treated as a petition requesting that the requirement of 37 CFR 1.48(a) be waived or suspended pursuant to 37 CFR 1.183 in order to include the include two missing signature sheets of the originally filed declaration.

The petition is **GRANTED**.

The petition states that all nine inventors properly executed individual declaration signature sheets. The error occurred when two of the signature sheets, for Eric A. Breitbard and Melanie McKinley McLaughlin, were inadvertently left out during filing of the declaration papers. Thus, at the time of filing of the application only seven of the nine inventors were listed. The instant petition seeks to correct the inventorship to include all nine inventors. 37 CFR 1.48 specifically provides for correction of inventorship of a patent application.

The petition decision mailed January 8, 2008 dismissed the petition filed July 6, 2007 for failure to comply with 37 CFR 1.48(a)(5) in that no written consent of the assignee was provided.

The renewed petition includes assignee's consent.

Office records have been corrected to reflect the addition of Eric A. Breitbard and Melanie McKinley McLaughlin as co-inventors of the above referenced application.

Telephone inquiries regarding this communication should be directed to Carl Friedman at (571) 272-6842.

The application is being referred to Technology Center Art Unit 2911 for further consideration on the merits in due course.

Carl Friedman
Petitions Examiner
Office of Petitions

UNITED STATES PATENT AND TRADEMARK OFFICE

Commissioner for Patents
United States Patent and Trademark Office
P.O. Box 1450
Alexandria, VA 22313-1450
www.uspto.gov

STEVEN R. TOLLETTE
P.O. BOX 232
JENKS, OK 74037-0232

COPY MAILED
MAR 30 2007
OFFICE OF PETITIONS

RECEIVED
MAR 30 2007
OFFICE OF PETITIONS
CANCELED

In re Application of

Joseph James Masad

Application No. 29/244,168

Filed: December 6, 2005

Attorney Docket No. GDIT001.SRT

DECISION ON PETITION

This is a decision on the petition to withdraw the holding of abandonment under 37 CFR 1.181(a), filed March 7, 2007.

The petition is **granted**.

This application was held abandoned January 24, 2007, after no reply was received to the Notice of Allowance and Issue Fee Due mailed October 23, 2006. The notice set forth a shortened statutory period of reply of three months from its mailing date. Extensions of the time set for reply under 37 CFR 1.136(a) were available. No response was received within the allowable period and the application became abandoned on January 24, 2007. A Notice of Abandonment was mailed February 23, 2007. The instant petition was filed on March 7, 2007. Petitioner maintains that the notice of October 23, 2007, was never received and provides a copy of the relevant docketing calendar as proof of the same.

Section 711.03(c)(II) of the *Manual of Patent Examining Procedure* ("MPEP") provides that in order to establish non-receipt of an Office action so as prove that the imposition of a holding of abandonment is improper, petitioner must: 1) provide a statement to the Office indicating that the Office action was not received by petitioner; 2) include in the statement an attestation to the fact that a review of the file jacket and docket records maintained by petitioner indicates that the Office action was not received; and 3) provide a copy of the docket record where the non-received Office communication would have been entered had it been received and docketed.

Petitioner has met the burden of proof as established by Section 711.03(c)(II) of the MPEP. The holding of abandonment is, therefore, withdrawn.

The application file is being forwarded to Technology Center 2900, GAU 2916 for further processing that may include remailing of the Notice of Allowance and Issue Fee Due and Notice of Allowability and resetting of the period for reply.

Questions concerning this decision should be directed to the undersigned at (571) 272-3222.

Kenya A. McLaughlin
Petitions Attorney
Office of Petitions

UNITED STATES PATENT AND TRADEMARK OFFICE

COMMISSIONER FOR PATENTS
UNITED STATES PATENT AND TRADEMARK OFFICE
P.O. BOX 1450
ALEXANDRIA, VA 22313-1450
www.uspto.gov

STEPHEN E. FELDMAN
12 EAST 41ST STREET
NEW YORK, NY 10017

COPY MAILED

JUL 02 2008

OFFICE OF PETITIONS

In re Application of :
Danny S. Lai :
Application No. 29/244,227 : ON PETITION
Filed: December 7, 2005 :
Attorney Docket No. None :

This is a decision in response to the petition, filed March 14, 2008, to revive the above-identified application under the provisions of 37 CFR 1.137(b).

The petition is DISMISSED AS MOOT.

A review of the record discloses that an Office action under Ex parte Quayle, 1935 Dec. Comm'r Pat. 11 (1935) was mailed on February 23, 2007, which set a shortened statutory period for reply of two (2) months. A timely response was filed on March 14, 2007. In fact, the drawings were acknowledged as acceptable by the Examiner in the Notice of Allowability mailed May 8, 2007. For some unknown reason, on March 14, 2008, the present petition was filed, again responding to the February 23, 2007 Office action with an amendment and replacement drawings.

As the record has shown that the drawings filed March 14, 2007 were acceptable, no further drawings are required. Further, as the issue fee was timely, submitted on August 13, 2007, using a Certificate of Mailing dated August 8, 2007, the application subsequently issued as U.S. Patent No. D553,541 on October 23, 2007. Since no abandonment existed, the petition under 37 CFR 1.137(b) is unnecessary and the $770 petition fee is subject to refund.

Any request for refund of the petition fee noted above must include a copy of this decision and be mailed to Mail Stop 16, Director of the U.S. Patent and Trademark Office, P. O. Box 1450, Alexandria, VA 22313-1450 or faxed to the Customer Service Help Desk at (571) 273-6500.

Telephone inquiries concerning this decision may be directed to the undersigned at (571) 272-3204.

Sherry D. Brinkley
Petitions Examiner
Office of Petitions

UNITED STATES PATENT AND TRADEMARK OFFICE

Commissioner for Patents
United States Patent and Trademark Office
P.O. Box 1450
Alexandria, VA 22313-1450
www.uspto.gov

D. Brit Nelson
Attn: IP Docketing Clerk
Locke, Liddell & Sapp LLP
600 Travis, Suite 3400
Houston TX 77002

COPY MAILED

MAR 2 0 2006

OFFICE OF PETITIONS

In re Application of	:	
Rhea, et al.	:	
Application No. 29/244,314	:	ON PETITION
Filed: December 7, 2005	:	
Attorney Docket No. 021840-567US	:	

This is a decision on the petition, filed January 27, 2006 (certificate of mailing date January 25, 2006), requesting, in effect, withdrawal of the Notice to File Missing Parts of Nonprovisional Application (Notice), mailed January 5, 2006. The petition will be treated under 37 CFR 1.181.

The petition under 37 CFR 1.181 is **GRANTED**.

The application was filed on December 7, 2005. On January 5, 2006, the Office of Initial Patent Examination (OIPE) mailed a Notice informing petitioners that an executed declaration appeared to have been omitted. The Notice required petitioners to submit an executed declaration and a surcharge for its late filing.

In response to the Notice, petitioners timely filed the present petition. Petitioners request that the Office withdraw the January 5, 2006 Notice on the basis that an executed declaration was received in the Patent and Trademark Office (PTO) on December 7, 2005. In support, the petition is accompanied by a copy of applicants' itemized postcard receipt showing an Office of Initial Patent Examination generated barcode citing December 7, 2005 as the date of receipt. The postcard lists, *inter alia*, that the filing included a two page declaration. A review of the application file reveals that only 1 page is present. The page does not contain inventor information.

The return postcard constitutes *prima facie* evidence that a two page declaration was filed on December 7, 2005. MPEP 503. Accordingly, the request is granted and the Notice of January 5, 2006 is vacated. No petition fee has been or will be charged in connection with this matter.

Pursuant to petitioners' authorization, deposit account no. 12-1322 will be credited the $130.00 late declaration surcharge charged on February 9, 2006.

After the mailing of this decision, the application will be returned to Office of Initial Patent Examination for further processing.

Any inquiries pertaining to this matter may be directed to the undersigned at (571) 272-3230.

E. Shirene Willis
Senior Petitions Attorney
Office of Petitions
Office of the Deputy Commissioner
for Patent Examination Policy

UNITED STATES PATENT AND TRADEMARK OFFICE

Commissioner for Patents
United States Patent and Trademark Office
P.O. Box 1450
Alexandria, VA 22313-1450
www.uspto.gov

Date: 06/30/08

Patent No. : D558477 S
Ser. No. : 29/244,323
Inventor(s) : NARDI, GIAMPIETRO
Issued : 01/01/08
Title : **CHAIR**
Docket No. : **66309-217**

Re: Request for Certificate of Correction

Consideration has been given your request for the issuance of a certificate of correction for the above-identified patent under the provisions of Rule(s) 1.322 and/or 1.323.

Assignees' names and addresses (assignment data) printed in a patent, are based *solely* on information supplied in the appropriate space for identifying the assignment data, i.e., item 3 of the Issue Fee Transmittal Form PTOL-85B. Granting of a request under 37 CFR 3.81(b) is required to correct applicant's error providing ***incorrect or erroneous*** assignment data, *before* issuance of a Certificate of Correction, under 37 CFR 1.323 *(see Manual of Patent Examining Procedures (M.P.E.P) Chp.1400, sect. 1481).* This procedure is required *at any time after the issue fee is paid*, including after issuance of the patent.

In view of the foregoing, your request, in this mater, is hereby denied.

A request to correct the Assignee under 37 CFR 3.81(b) should include:

A. **the processing fee set forth in 37 CFR 1.117(h) (currently $130);**
B. a statement that the failure to include the correct assignee name on the PTOL-85B was inadvertent; and
C. a copy of the Notice of Recordation of Assignment Document, reflecting the reel and frame number where the assignment(s) is recorded and/or reflecting proof of *the date* the assignment was submitted for recordation.

In the Request, Applicant(s) may request that the file be forwarded to Certificates of Correction Branch, for issuance of a Certificate of Correction, if the Request is granted.

Any request under 37 CFR 3.81(b) should be directed to the following address or facsimile number:

By mail: Mail Stop PETITIONS
Commissioner for Patents
Post Office Box 1450
Alexandria, VA 22313-1450

By hand: Customer Service Window
Mail Stop Petitions
Randolph Building
401 Dulany Street
Alexandria, VA 22314

By fax: (703) 872-9306
ATTN: Office of Petitions

If a fee (currently $100) was previously submitted for consideration of a Request for Certificate of Correction, under CFR 1.323, to correct assignment data, no additional fee is required.

Lamonte M. Newsome

Lamonte M. Newsome
For Mary Diggs, Supervisor
Decisions & Certificates
Of Correction Branch
(703)-305-5358 or (703) 308-9390 #112

JOHN P. DE LUCA
17420 RYEFIELD CT.
DICKERSON MD 20842

LMN

UNITED STATES PATENT AND TRADEMARK OFFICE

Commissioner for Patents
United States Patent and Trademark Office
P.O. Box 1450
Alexandria, VA 22313-1450
www.uspto.gov

JOHN P. DE LUCA
17420 RYEFIELD CT.
DICKERSON MD 20842

COPY MAILED

AUG 2 9 2008

In re Patent No. D558477 :
Issue Date: 01/01/2008 :
Application No. 29/244323 : ON PETITION
Filed: 12/08/2005 :
Attorney Docket No. 66309-217 :

This is a decision on the petition filed on July 7, 2008, which is being treated as a petition under 37 CFR 3.81(b) to correct the name of the assignee on the front page of the above-identified patent by way of a certificate of correction.

The petition is **DISMISSED**.

Petitioner requests issuance of a certificate of correction in the name of "NARDI S.p.A., Chiampo, Italy."

37 CFR 3.81(b), effective June 25, 2004, reads:

> *After payment of the issue fee:* Any request for issuance of an application in the name of the assignee submitted after the date of payment of the issue fee, and any request for a patent to be corrected to state the name of the assignee, must state that the assignment was submitted for recordation as set forth in § 3.11 **before issuance of the patent**, and must include a request for a certificate of correction under § 1.323 of this chapter (accompanied by the fee set forth in § 1.20(a) and the processing fee set forth in § 1.17(i) of this chapter [emphasis added]. *See also* MPEP 1481.01.

U.S. Patent and Trademark Office assignment records disclose that an assignment from Giampietro Nardi to NARDI S.p.A. was recorded on February 1, 2008, **after the date of issuance of this patent**. Accordingly, since the assignment was not submitted for recordation until after issuance of this patent, issuance of a certificate of correction would not be proper.

Telephone inquiries concerning this decision on petition should be directed to the undersigned at (571) 272-3231.

DWood

Douglas I. Wood
Senior Petitions Attorney
Office of Petitions

UNITED STATES PATENT AND TRADEMARK OFFICE

Commissioner for Patents
United States Patent and Trademark Office
P.O. Box 1450
Alexandria, VA 22313-1450
www.uspto.gov

HAMRE, SCHUMANN, MUELLER & LARSON, P.C.
P.O. BOX 2902
MINNEAPOLIS MN 55402-0902

COPY MAILED

MAR 14 2008

OFFICE OF PETITIONS

In re Application of	:	
Mihara, Hiroko	:	
Application No. 29/244,339	:	DECISION ON PETITION
Filed: December 8, 2005	:	
Attorney Docket No. 10921.376US01	:	

This is a decision on the petition under the unintentional provisions of 37 CFR 1.137(b), filed February 20, 2008, to revive the above-identified application.

The petition is **GRANTED**.

The petition satisfies the requirements of 37 CFR 1.137(b) in that petitioner has supplied (1) the reply in the form of Replacement Drawings, (2) the petition fee, (3) a proper statement of unintentional delay, and (4) a terminal disclaimer.

Telephone inquiries concerning this decision should be directed to the undersigned at (571) 272-3206.

This matter is being referred to Technology Center 2914 for further examination on the merits.

Liana Walsh
Petitions Examiner
Office of Petitions

PTO/SB/27 (09-04)
Approved for use through 07/31/2006. OMB 0651-0031
U.S. Patent and Trademark Office; U.S DEPARTMENT OF COMMERCE
Under the Paperwork Reduction ACT of 1995, no persons are required to respond to collection of information unless it displays a valid OMB control number.

REQUEST FOR EXPEDITED EXAMINATION OF A DESIGN APPLICATION (37 CFR 1.155)

Application Number	
Filing Date	
First Named Inventor	Jeffrey Lubell
Title	Stitching Pattern Applied to Clothing
Atty Docket Number	83914-010300

112949 US PTO
29/244409
120905

ADDRESS TO:
MAIL STOP EXPEDITED DESIGN
COMMISSIONER FOR PATENTS
P.O. Box 1450
Alexandria, VA 22313-1450

3/31/06
Approved
JMStone
Jacqueline M. Stone, Director
Technology Center 1700

This is a request for expedited examination of a design application under 37 CFR 1.155.

NOTE: If the Request made by this form accompanies original application papers, include form PTO/SB/18 "Design Patent Application Transmittal" or its equivalent.

A preexamination search was conducted. The field of search was:

Stitching, Stitches

Related applications: N/A

If not previously filed for the above-identified application, the following items required by 37 CFR 1.155 are enclosed:

- Formal drawings (see 37 CFR 1.84).
- The fee set forth in 37 CFR 1.17(k).
- An information disclosure statement in compliance with 37 CFR 1.98.

[signature] 12/5/05
Signature Date

Andrea E. Bates 54621
Typed or printed name Registration Number, if applicable

678-553-2326
Telephone Number

WARNING: Information on this form may become public. Credit card information should not be included on this form. Provide credit card information and authorization on PTO-2038.

This collection of information is required by 37 CFR 1.155. The information is required to obtain or retain a benefit by the public which is to file (and by the USPTO to process) an application. Confidentiality is governed by 35 U.S.C. 122 and 37 CFR 1.11 and 1.14. This collection is estimated to take 6 minutes to complete, including gathering, preparing, and submitting the completed application form to the USPTO. Time will vary depending upon the individual case. Any comments on the amount of time you require to complete this form and/or suggestions for reducing this burden, should be sent to the Chief Information Officer, U.S. Patent and Trademark Office, U.S. Department of Commerce, P.O. Box 1450, Alexandria, VA 22313-1450. DO NOT SEND FEES OR COMPLETED FORMS TO THIS ADDRESS. SEND TO: Commissioner for Patents, P.O. Box 1450, Alexandria, VA 22313-1450.

If you need assistance in completing the form, call 1-800-PTO-9199 and select option 2.

12/14/2005 JBALINAN 00000080 29244409
04 FC:1802 900.00 DA

UNITED STATES PATENT AND TRADEMARK OFFICE

Commissioner for Patents
United States Patent and Trademark Office
P.O. Box 1450
Alexandria, VA 22313-1450
www.uspto.gov

COPY MAILED

JAN 26 2007

OFFICE OF PETITIONS

CHRISTIE, PARKER & HALE, LLP
PO BOX 7068
PASADENA, CA 91109-7068

In re Application of

Jeffrey Lubell : ON PETITION

Application No. 29/244,409 :

Filing Date: December 9, 2005 :

Attorney Docket No. 58240/TS580

This is a decision on the petition under 37 CFR §1.137(b), filed December 1, 2006, in the above-identified application.

The petition is **dismissed**.

Any request for reconsideration of this decision must be submitted within TWO (2) MONTHS from the mail date of this decision. Extensions of time under 37 CFR 1.136(a) are permitted. The reconsideration request should include a cover letter entitled "Renewed Petition" under 37 CFR 1.137(b)."

This application became abandoned for failure to respond in a timely manner to the Notice of Allowance and Issue Fee Due mailed July 17, 2006. The notice allowed a statutory period for reply of three months from its mailing date. No reply was received within the allowable period, and the application became abandoned on October 18, 2006.

Effective December 1, 1997, the provisions of 37 CFR 1.137(b) now provide that where the delay in reply was unintentional, a petition may be filed to revive an abandoned application or a lapsed patent pursuant to 37 CFR 1.137(b). A grantable petition pursuant to 37 CFR 1.137(b) must be accompanied by:

(1) the required reply, unless previously filed. In a non-provisional application abandoned for failure to prosecute, the required reply may be met by the filing of a continuing application. In an application or patent, abandoned or lapsed for failure to pay the issue fee, or any portion thereof, the required reply must be the payment of the issue fee or any outstanding balance thereof.

(2) the petition fee as set forth in 37 CFR 1.17(m);

(3) a statement that the entire delay in filing the required reply from the due date for the reply until the filing of a grantable petition pursuant to 37 CFR 1.137(b) was unintentional. The Commissioner may require additional information where there is a question whether the delay was unintentional; and

(4) any terminal disclaimer (and fee set forth in 37 CFR 1.20(d)) required pursuant to 37 CFR 1.137(d).

The instant petition does not satisfy the requirements of item (4) above.

As to item (4), the terminal disclaimer was not found with the petition papers. The subject application is a design application, therefore; a terminal disclaimer is required in order to revive the application. Any renewed petition filed must be accompanied by the completed terminal disclaimer form, which is enclosed for petitioner's convenience. Pursuant to 37 CFR 1.137(d), the terminal disclaimer must dedicate to the public a terminal part of the term of any patent granted from this application that is equivalent to the period of abandonment of the application.

Further correspondence with respect to this matter should be addressed as follows:

By mail: Mail Stop Petitions
Commissioner for Patents
United States Patent and Trademark Office
Box 1450
Alexandria, VA 22313-1450

By facsimile: (571) 273-8300

Telephone inquiries concerning this matter may be directed to the undersigned at (571) 272-3222.

Kenya A. McLaughlin
Petitions Attorney
Office of Petitions

Enclosure: "Terminal Disclaimer to Accompany Petition"

PTO/SB/63 (09-06)
Approved for use through 03/31/2007. OMB 0651-0031
U.S. Patent and Trademark Office; U.S. DEPARTMENT OF COMMERCE
Under the Paperwork Reduction Act of 1995, no persons are required to a collection of information unless it displays a valid OMB control number.

TERMINAL DISCLAIMER TO ACCOMPANY PETITION	Docket Number (Optional)

In re Application of:

Name:

Application Number:

Filed:

For:

The owner*, _____ of _____ percent interest in the above-identified application hereby disclaims a terminal part of the term of any patent granted the above-identified application equivalent to: (1) if the above-identified application is a design application, the period of abandonment of the above-identified application, and (2) if the above-identified application is a utility or plant application, the lesser of: (a) the period of abandonment of the application; or (b) the period extending beyond twenty years from the date on which the above-identified application was filed in the United States or, if the application contains a specific reference to an earlier filed application(s) under 35 U.S.C. 120, 121, or 365(c), from the date on which the earliest such application was filed. This disclaimer also applies to any patent granted on a utility or plant application filed before June 8, 1995, or a design application, that contains a specific reference under 35 U.S.C. 120, 121, or 365(c) to the above-identified application. This disclaimer is binding upon the grantee, and its successors or assigns.

Check either box 1 or 2 below, if appropriate.

1. ☐ For submissions on behalf of an organization (e.g., corporation, partnership, university, government agency, etc.), the undersigned is empowered to act on behalf of the organization.
2. ☐ The undersigned is an attorney or agent of record. Registration Number_____.

_____ _____
Signature Date

_____ _____
Typed or Printed Name Telephone Number

☐ Terminal disclaimer fee under 37 CFR 1.20(d) included.

WARNING: Information on this form may become public. Credit card information should not be included on this form. Provide credit card information and authorization on PTO-2038.

* Statement under 37 CFR 3.73(b) is required if terminal disclaimer is signed by the assignee (owner). Form PTO/SB/96 may be used for making this certification. See MPEP § 324.

This collection of information is required by 37 CFR 1.137. The information is required to obtain or retain a benefit by the public which is to file (and by the USPTO to process) an application. Confidentiality is governed by 35 U.S.C. 122 and 37 CFR 1.11 and 1.14. This collection is estimated to take 12 minutes to complete, including gathering, preparing, and submitting the completed application form to the USPTO. Time will vary depending upon the individual case. Any comments on the amount of time you require to complete this form and/or suggestions for reducing this burden, should be sent to the Chief Information Officer, U.S. Patent and Trademark Office, U.S. Department of Commerce, P.O. Box 1450, Alexandria, VA 22313-1450. DO NOT SEND FEES OR COMPLETED FORMS TO THIS ADDRESS. **SEND TO: Commissioner for Patents, P.O. Box 1450, Alexandria, VA 22313-1450.**

If you need assistance in completing the form, call 1-800-PTO-9199 and select option 2.

Privacy Act Statement

The **Privacy Act of 1974 (P.L. 93-579)** requires that you be given certain information in connection with your submission of the attached form related to a patent application or patent. Accordingly, pursuant to the requirements of the Act, please be advised that: (1) the general authority for the collection of this information is 35 U.S.C. 2(b)(2); (2) furnishing of the information solicited is voluntary; and (3) the principal purpose for which the information is used by the U.S. Patent and Trademark Office is to process and/or examine your submission related to a patent application or patent. If you do not furnish the requested information, the U.S. Patent and Trademark Office may not be able to process and/or examine your submission, which may result in termination of proceedings or abandonment of the application or expiration of the patent.

The information provided by you in this form will be subject to the following routine uses:

1. The information on this form will be treated confidentially to the extent allowed under the Freedom of Information Act (5 U.S.C. 552) and the Privacy Act (5 U.S.C 552a). Records from this system of records may be disclosed to the Department of Justice to determine whether disclosure of these records is required by the Freedom of Information Act.
2. A record from this system of records may be disclosed, as a routine use, in the course of presenting evidence to a court, magistrate, or administrative tribunal, including disclosures to opposing counsel in the course of settlement negotiations.
3. A record in this system of records may be disclosed, as a routine use, to a Member of Congress submitting a request involving an individual, to whom the record pertains, when the individual has requested assistance from the Member with respect to the subject matter of the record.
4. A record in this system of records may be disclosed, as a routine use, to a contractor of the Agency having need for the information in order to perform a contract. Recipients of information shall be required to comply with the requirements of the Privacy Act of 1974, as amended, pursuant to 5 U.S.C. 552a(m).
5. A record related to an International Application filed under the Patent Cooperation Treaty in this system of records may be disclosed, as a routine use, to the International Bureau of the World Intellectual Property Organization, pursuant to the Patent Cooperation Treaty.
6. A record in this system of records may be disclosed, as a routine use, to another federal agency for purposes of National Security review (35 U.S.C. 181) and for review pursuant to the Atomic Energy Act (42 U.S.C. 218(c)).
7. A record from this system of records may be disclosed, as a routine use, to the Administrator, General Services, or his/her designee, during an inspection of records conducted by GSA as part of that agency's responsibility to recommend improvements in records management practices and programs, under authority of 44 U.S.C. 2904 and 2906. Such disclosure shall be made in accordance with the GSA regulations governing inspection of records for this purpose, and any other relevant (*i.e.*, GSA or Commerce) directive. Such disclosure shall not be used to make determinations about individuals.
8. A record from this system of records may be disclosed, as a routine use, to the public after either publication of the application pursuant to 35 U.S.C. 122(b) or issuance of a patent pursuant to 35 U.S.C. 151. Further, a record may be disclosed, subject to the limitations of 37 CFR 1.14, as a routine use, to the public if the record was filed in an application which became abandoned or in which the proceedings were terminated and which application is referenced by either a published application, an application open to public inspection or an issued patent.
9. A record from this system of records may be disclosed, as a routine use, to a Federal, State, or local law enforcement agency, if the USPTO becomes aware of a violation or potential violation of law or regulation.

UNITED STATES PATENT AND TRADEMARK OFFICE

Commissioner for Patents
United States Patent and Trademark Office
P.O. Box 1450
Alexandria, VA 22313-1450
www.uspto.gov

CHRISTIE, PARKER & HALE, LLP
PO BOX 7068
PASADENA, CA 91109-7068

COPY MAILED

JUN 18 2007

OFFICE OF PETITIONS

In re Application of:
Jeffrey Lubell
Application No. 29/244,409
Filed: December 9, 2005
Attorney Docket No. 5820/TS580

DECISION ON PETITION

This is a decision on the petition under 37 CFR §1.137(b), February 8, 2007, to revive the above-identified application.

The renewed petition is **granted.**

This application became abandoned for failure to timely remit the issue fee of $400.00 as required by the Notice of Allowance and Issue Fee mailed July 17, 2006. The Notice set forth a three (3) month statutory period for reply. Accordingly, this application became abandoned on October 18, 2006. A Notice of Abandonment was mailed on February 7, 2007. A Petition under 37 CFR 1.137(b) was first filed on December 1, 2006, and dismissed by a decision mailed January 26, 2007.

The terminal disclaimer filed February 8, 2007, is noted.

The application is being forwarded to the Office of Patent Publications for processing into a patent.

Telephone inquiries concerning this matter may be directed to the undersigned at (571) 272-3222.

Kenya A. McLaughlin
Petitions Attorney
Office of Petitions

UNITED STATES PATENT AND TRADEMARK OFFICE

Commissioner for Patents
United States Patent and Trademark Office
P.O. Box 1450
Alexandria, VA 22313-1450
www.uspto.gov

JEFFREY L. BRANDT
c/o PORTFOLIO IP
P.O. BOX 52050
MINNEAPOLIS MN 55402

COPY MAILED

MAR 15 2006

OFFICE OF PETITIONS

In re Application of :
Imboden et al. :
Application No. 29/244,443 : ON PETITION
Filed: December 9, 2005 :
Attorney Docket No.: J111D001US00 :

This is a decision on the petition filed February 9, 2006, requesting in effect, that a Notice of Omitted Parts in a Nonprovisional Application[1] ("Notice") mailed December 30, 2005 be withdrawn.

The application was filed on December 9, 2005. However, on December 30, 2005, the Office of Initial Patent Examination (OIPE) mailed a Notice stating that the application had been accorded a filing date of December 9, 2005 but figures 8-18 described in the specification appeared to have been omitted.

In response, the present petition was filed wherein Petitioner contends 3 sheets of drawings which included figures 8-18 as described in the specification were filed on December 9, 2005. In support, the petition is accompanied by a copy of applicants' return postcard which lists 3 sheets of drawings. The petition is further accompanied by 3 sheets of drawings including figures 8-18.

Applicants' postcard receipt is prima facie evidence that 3 sheets of drawings were received on December 9, 2005. A review of the

[1]The above-identified application is a design application.

application file (artifact folders) shows that the 3 sheets of drawings including figures 8-18 have been located. Therefore, it is concluded that 3 sheets of drawings including figures 8-18 as described in the specification were received on December 9, 2005, as shown in counsel's file.

The petition is Granted. The petition fee of $400.00 will be refunded.

The application will be returned to the Office of Initial Patent Examination for further processing with a filing date of December 9, 2005, using the application papers submitted on filing including figures 8-18.

Telephone inquiries related to this decision may be directed to the undersigned at (571) 272-3215.

Charlema R. Grant

Charlema R. Grant
Petitions Attorney
Office of Petitions

UNITED STATES PATENT AND TRADEMARK OFFICE

Commissioner for Patents
United States Patent and Trademark Office
P.O. Box 1450
Alexandria, VA 22313-1450
www.uspto.gov

Donald L. Beeson
Beeson Skinner Beverly, LLP
One Kaiser Plaza, Suite 750
Oakland CA 94612

COPY MAILED
JUL 17 2006
OFFICE OF PETITIONS

In re Application of :
Kallenberger 29/244,444 :
Application No. ~~29/244,443~~ : ON PETITION
Filed: December 9, 2005 :
Attorney Docket No.: K3014-038.D :

This is a decision on the petition filed March 9, 2006, requesting in effect, that a Notice of Omitted Parts in a Nonprovisional Application[1] ("Notice") mailed January 9, 2006 be withdrawn.

The application was filed on December 9, 2005. However, on January 9, 2006, the Office of Initial Patent Examination (OIPE) mailed a Notice stating that the application had been accorded a filing date of December 9, 2005 but figures 5,6,11,and 12 described in the specification appeared to have been omitted.

In response, the present petition was filed wherein Petitioner contends 2 sheets of drawings which included figures 5,6,11 and 12 as described in the specification were filed on December 9, 2005. Petitioner states that the drawings were at the bottom of the pages and the drawings were cut off during processing.

A review of the application file (artifact folders) shows that the 2 sheets of drawings including figures 5,6,11 and 12 have been located. Therefore, it is concluded that 2 sheets of drawings including figures 5,6,11 and 12 as described in the specification were received on December 9, 2005, as shown in counsel's file.

The petition is Granted. The petition fee of $400.00 will be refunded.

---

[1]The above-identified application is a design application.

29/244,444

The application will be returned to the Office of Initial Patent Examination for further processing with a filing date of December 9, 2005, using the application papers submitted on filing including figures 5,6,11 and 12.

Telephone inquiries related to this decision may be directed to the undersigned at (571) 272-3215.

Charlema R. Grant

Charlema R. Grant
Petitions Attorney
Office of Petitions

UNITED STATES PATENT AND TRADEMARK OFFICE

Commissioner for Patents
United States Patent and Trademark Office
P.O. Box 1450
Alexandria, VA 22313-1450
www.uspto.gov

COPY MAILED

SEP 27 2007

OFFICE OF PETITIONS

RUSSO & DUCKWORTH , LLP
9090 IRVINE CENTER DRIVE
SECOND FLOOR
IRVINE, CA 92618

In re Application of
David **MILES**
Application No. 29/244,472
Filed: December 10, 2005
Attorney Docket No. **744-P-2-USA**

DECISION ON PETITION

This is a decision on the petition under the unintentional provisions of 37 CFR 1.137(b), filed August 17, 2007, to revive the above-identified application.

The petition is **DISMISSED**.

Any request for reconsideration of this decision must be submitted within TWO (2) MONTHS from the mail date of this decision. Extensions of time under 37 CFR 1.136(a) are permitted. The reconsideration request should include a cover letter entitled "Renewed Petition under 37 CFR 1.137(b)." This is **not** a final agency action within the meaning of 5 U.S.C. § 704.

The application became abandoned for failure to correct drawings request in a timely manner in reply to the Notice of Allowability, mailed January 30, 2007, which set a period for reply of three (3) months. Accordingly, this application became abandoned on May 01, 2007.

A grantable petition under 37 CFR 1.137(b) must be accompanied by: (1) the required reply, unless previously filed; (2) the petition fee as set forth in 37 CFR 1.17(m); (3) a statement that the entire delay in filing the required reply from the due date for the reply until the filing of a grantable petition pursuant to 37 CFR 1.137(b) was unintentional; and (4) any terminal disclaimer (and fee as set forth in 37 CFR 1.20(d)) required by 37 CFR 1.137(d). Where there is a question as to whether either the abandonment or the delay in filing a petition under 37 CFR 1.137 was unintentional, the Director may require additional information. See MPEP 711.03(c)(II)(C) and (D). The instant petition lacks item(s) (4) above.

Since the above-identified application is a utility or plant application filed before June 8, 1995, 37 CFR 1.137(d) requires a terminal disclaimer dedicating to the public a terminal part of the term of any patent granted on the application or any patent granted on any continuing application that contains a specific reference under 35 U.S.C. 120, 121, or 365(c) to the application. The period to be disclaimed will be a terminal part of the patent to be granted equivalent to the period of abandonment. The period of abandonment will be computed to be the number of months from the date of abandonment to the date of filing a grantable petition. A terminal disclaimer fee of $130 ($65 if small entity) is required. If the terminal disclaimer is signed by an assignee, the assignee must comply with the requirements of 37 CFR 3.73(b).

The change of address has been accepted and made of record.

Further correspondence with respect to this matter should be addressed as follows:

By Mail: Mail Stop PETITION
Commissioner for Patents

P. O. Box 1450
Alexandria, VA 22313-1450

By hand: U.S. Patent and Trademark Office
Customer Service Window, Mail Stop Petitions
Randolph Building
401 Dulany Street
Alexandria, VA 22314

The centralized facsimile number is **(571) 273-8300.**

Telephone inquiries concerning this decision should be directed to Tredelle Jackson at (571) 272-2783.

David Bucci
Petitions Examiner
Office of Petitions

UNITED STATES PATENT AND TRADEMARK OFFICE

Commissioner for Patents
United States Patent and Trademark Office
P.O. Box 1450
Alexandria, VA 22313-1450
www.uspto.gov

COPY MAILED

FEB 19 2008

RUSSO & DUCKWORTH , LLP
9090 IRVINE CENTER DRIVE
SECOND FLOOR
IRVINE CA 92618

In re Application of	:	
David **MILES**	:	
Application No. 29/244,472	:	DECISION ON PETITION
Filed: December 10, 2005	:	
Attorney Docket No. 744-P-2-USA	:	

This is a decision on the renewed petition under the unintentional provisions of 37 CFR 1.137(b), filed October 11, 2007, to revive the above-identified application.

The petition is **GRANTED**.

This application became abandoned for failure to timely pay the issue fees and to submit corrected formal drawings on or before April 30, 2007, as required by the Notice of Allowance and Fee(s) Due and the Notice of Allowability, mailed January 30, 2007. Accordingly, the date of abandonment of this application is May 01, 2007.

The petition satisfies the requirements of 37 CFR 1.137(b) in that petitioner has supplied (1) the reply in the form of the $400 issue fee, (2) the petition fee of $750, (3) a proper statement of unintentional delay, and (4) a terminal disclaimer and fee as required by 37 CFR 1.137(d). Accordingly, the failure to timely pay the issue fee as required by the Notice of Allowance and Fee(s) is accepted as being unintentionally delayed.

The terminal disclaimer is accepted and has been made of record. Any continuing application filed from this application must contain a copy of the terminal disclaimer. The copy of the terminal disclaimer must be filed with a cover letter requesting the terminal disclaimer be recorded on the continuing application. A copy of this decision should be attached to the cover letter.

Telephone inquiries concerning this decision should be directed to Tredelle Jackson at (571) 272-2783.

This application is being referred to Publishing Division for further processing in accordance with this decision on petition.

David Bucci
Petitions Examiner
Office of Petitions

UNITED STATES PATENT AND TRADEMARK OFFICE

Commissioner for Patents
United States Patent and Trademark Office
P.O. Box 1450
Alexandria, VA 22313-1450
www.uspto.gov

NOVAK DRUCE & QUIGG, LLP
1300 EYE STREET NW
SUITE 1000 WEST TOWER
WASHINGTON DC 20005

COPY MAILED

NOV 29 2007

OFFICE OF PETITIONS

In re Application of :
LASSE PETTERSSON :
Application No. 29/244,505 : ON PETITION
Filed: 12/09/2005 :
Attorney Docket No. 0173.077.DSUS00 :

This is a decision on the petition under 37 CFR 1.137(b), filed August 20, 2007, to revive the above-identified design application.

The petition is **GRANTED**.

This application became abandoned for failure to timely pay the issue fee on or before March 1, 2007, as required by the Notice of Allowance and Fee(s) Due, mailed December 1, 2006. Accordingly, the date of abandonment of this application is March 2, 2007. A Notice of Abandonment was mailed on April 13, 2007.

The petition satisfies the requirements of 37 CFR 1.137(b) in that petitioner has supplied (1) the reply in the form of the issue fee; (2) the petition fee; (3) a proper statement of unintentional delay; and (4) a terminal disclaimer and fee as required by 37 CFR 1.137(d).

The terminal disclaimer is accepted and has been made of record.

This matter is being referred to the Office of Patent Publications for issuance of a patent.

Telephone inquiries concerning this decision should be directed to the undersigned at (571) 272-3211.

Christina Tartera Donnell

Christina Tartera Donnell
Senior Petitions Attorney
Office of Petitions

UNITED STATES PATENT AND TRADEMARK OFFICE

Commissioner for Patents
United States Patent and Trademark Office
P.O. Box 1450
Alexandria, VA 22313-1450
www.uspto.gov

IRVING KESCHNER
21535 HAWTHORNE BLVD, SUITE 385
TORRANCE, CA 90503

COPY MAILED

DEC 15 2008

In re Application of :
Tae Ho **KIM** :
Application No. 29/244,517 : DECISION ON PETITION
Filed: December 9, 2005 : UNDER 37 CFR 1.137(b)
Attorney Docket No. **DSS05-0190-USO** :

This is a decision on the petition under the unintentional provisions of 37 CFR 1.137(b), filed May 20, 2008, to revive the above-identified application.

The petition is **GRANTED**.

This application became abandoned for failure to timely pay the issue fee and to submit corrected formal drawings on or before December 6, 2007, as required by the Notice of Allowance/Allowability mailed, September 6, 2007. Accordingly, the date of abandonment of this application is December 7, 2007.

The petition satisfies the requirements of 37 CFR 1.137(b) in that petitioner has supplied (1) the reply in the form of payment of the issue fee of $820; (2) the petition fee of $1540, (3) an adequate statement of unintentional delay and (4) a terminal disclaimer and fee as required by 37 CFR 1.137(b).

The terminal disclaimer filed May 20, 2008 has been entered and made of record. Any continuing application filed from this application must contain a copy of the terminal disclaimer. The copy of the terminal disclaimer must be filed with a cover letter requesting the terminal disclaimer be recorded on the continuing application. A copy of this decision should be attached to the cover letter.

The drawing(s) have been approved by the USPTO draftsperson.

Telephone inquiries concerning this decision should be directed to Monica A. Graves at (571) 272-7253.

This application is being referred to the Office of Data Management for processing into a patent.

Brian W. Brown
Petitions Examiner
Office of Petitions

UNITED STATES PATENT AND TRADEMARK OFFICE

COMMISSIONER FOR PATENTS
UNITED STATES PATENT AND TRADEMARK OFFICE
P.O. BOX 1450
ALEXANDRIA, VA 22313-1450
www.uspto.gov

G. Donald Weber, Jr.
18442 Taft Avenue
Villa Park, CA 92861

COPY MAILED
JUL 28 2006
OFFICE OF PETITIONS

In re Application of :
Hanson, et al. :
Filed: December 12, 2005 : ON PETITION
Application No. 29/244,520 :
Atty. Dkt. No.: CHCB-1 :

This decision is in response to the petition filed January 23, 2006 to accorded the above-identified application a filing date of December 12, 2005 with drawings as part of the original application papers as filed.

The application was filed December 12, 2005. The Notice mailed December 30, 2005 indicated that the application had not been accorded a filing date because the application appeared to have been submitted without drawings as required per 35 USC 113.

In response, the petitioners argue that the application as deposited included two sheets of drawings and has presented as proof of mailing and proof of receipt of the two sheets of drawings a return postcard date stamped by the Office on December 12, 2005. A copy of two drawing sheets purportedly filed with the application on December 12, 2005 was submitted herewith.

The two sheets of drawings submitted with the application papers have not been located. However, in view of the evidence presented, the petition to accord the application a filing date of December 12, 2005 is GRANTED.

Since the original sheets of drawings cannot be located in the Office, the copy submitted herewith will be used for examination purposes.

No petition fee is due in connection with this matter.

This application will be returned to the Office of Initial Patent Examination for further processing with a filing date of December 12, 2005 with two drawing sheets as part of the original disclosure.

Telephone inquiries related to this decision may be directed to the undersigned at (571) 272-3205.

Alesia M. Brown
Petitions Attorney
Office of Petitions

UNITED STATES PATENT AND TRADEMARK OFFICE

Commissioner for Patents
United States Patent and Trademark Office
P.O. Box 1450
Alexandria, VA 22313-1450
www.uspto.gov

BAKER & DANIELS LLP / ROCHE
300 NORTH MERIDIAN STREET
SUITE 2700
INDIANAPOLIS, IN 46204

MAILED

JUL 20 2010

OFFICE OF PETITIONS

In re Patent No. D605201
Issue Date: December 1, 2009
Application No. 29/244,535
Filed: December 9, 2005
Attorney Docket No. WP 23197 US

DECISION ON PETITION

This is a decision on the petition under 37 CFR 1.182, filed June 10, 2010, requesting issuance of a duplicate Letters Patent for the above-identified patent.

The petition is **GRANTED**.

The Publishing Division is directed to issue a duplicate Letters Patent.

As authorized, the $400 fee for the petition under 37 CFR 1.182 has been assessed to petitioner's deposit account.
Telephone inquiries concerning this decision may be directed to April M. Wise at (571) 272-1642. Inquiries regarding the issuance of the duplicate Letters Patent may be directed to Niomi P. Farmer in the Office of Data Management at (703) 756-1556.

A copy of this decision is being faxed to Office of Data Management for issuance of duplicate Letters Patent.

/Carl Friedman/
Carl Friedman
Petitions Examiner
Office of Petitions

cc: Niomi P. Farmer, Randolph Square, 9th Floor, Room D30-B (Fax No. (571) 270-9937)

UNITED STATES PATENT AND TRADEMARK OFFICE

Commissioner for Patents
United States Patent and Trademark Office
P.O. Box 1450
Alexandria, VA 22313-1450
www.uspto.gov

IRVING KESCHNER
21535 HAWTHORNE BOULEVARD
SUITE 385
TORRANCE CA 90503

COPY MAILED

NOV 2 5 2008

OFFICE OF PETITIONS

In re Application of	:	
Tae Ho Kim	:	
Application No. 29/244,545	:	DECISION ON PETITION
Filed: December 9, 2005	:	
Attorney Docket No. DSS05-0193-USO	:	

This is a decision on the petition under the unintentional provisions of 37 CFR 1.137(b), filed September 11, 2008, to revive the above-identified application.

The petition is **GRANTED**.

The petition satisfies the conditions for revival pursuant to the provisions of 37 CFR 1.137(b) in that (1) the reply in the form of the issue and publication fees and a terminal disclaimer/fee; (2) the petition fee; and (3) the required statement of unintentional delay have been received. Accordingly, the reply to the Notice of Allowance/Notice of Allowability mailed September 6, 2007, is accepted as having been unintentionally delayed.

Telephone inquiries concerning this decision should be directed to the undersigned at (571) 272-3208.

This application is being referred to the Office of Data Management to be processed into a patent and for review of the drawings submitted on September 11, 2008.

Karen Creasy
Petitions Examiner
Office of Petitions

UNITED STATES PATENT AND TRADEMARK OFFICE

COMMISSIONER FOR PATENTS
UNITED STATES PATENT AND TRADEMARK OFFICE
P.O. BOX 1450
ALEXANDRIA, VA 22313-1450
WWW.USPTO.GOV

Paper No. None

QUARLES & BRADY LLP
411 E. WISCONSIN AVENUE
SUITE 2040
MILWAUKEE WI 53202-4497

COPY MAILED

JAN 2 7 2006

OFFICE OF PETITIONS

In re Application of :
Dwight B. Stephenson, Michael J. Paik, and :
Peter A. Jahnke :
Application No. 29/244,563 :
Filed: December 12, 2005 : DECISION ON PETITION
Title: HYDRAULIC VALVE MANIFOLD :
BLOCK :

This is in response to the petition under 37 C.F.R. §1.47(a)[1], filed December 12, 2005.

On December 12, 2005, the application was filed along with the present petition and a declaration identifying Dwight B. Stephenson, Michael J. Paik, and Peter A. Jahnke as joint inventors.

Along with the present petition, Petitioner has submitted the petition fee[2], a statement of facts, a declaration which has been executed by each of the joint inventors save Mr. Jahnke, and the last known address of the non-signing inventor.

---

[1]A grantable petition under 37 C.F.R. §1.47(a) requires:

(1) the petition fee of $200;
(2) a surcharge of $200 if the petition is not filed at the time of filing the application, as set forth in 37 CFR § 1.16(e);
(3) a statement of the last known address of the non-signing inventors;
(4) either
  a) proof that a copy of the entire application (specification, claims, drawings, and the oath or declaration) was sent or given to the non-signing inventor for review and proof that the non-signing inventor refuses to join in the application or
  b) proof that the non-signing inventor cannot be found or reached after diligent effort;
(5) a declaration which complies with 37 CFR §1.63.

Petitioner has met requirements (1) and (3) – (5) of 37 C.F.R. §1.47(a). The second requirement is not applicable as this petition was presented on filing.

The petition is **GRANTED** and this application is hereby accorded Rule §1.47(a) status.

As provided in Rule 1.47(a), this Office will forward notice of this application's filing to the non-signing inventor at the address given in the petition. Notice of the filing of this application will also be published in the Official Gazette.

Telephone inquiries regarding this decision should be directed to the undersigned at (571) 272-3225. All other inquiries concerning examination procedures or status of the application should be directed to the Technology Center.

Paul Shanoski
Senior Attorney
Office of Petitions
United States Patent and Trademark Office

2 Petitioner has submitted a portion of the petition fee. The balance has been charged to his Deposit Account, as authorized in the petition.

UNITED STATES PATENT AND TRADEMARK OFFICE

Commissioner for Patents
United States Patent and Trademark Office
P.O. Box 1450
Alexandria, VA 22313-1450
www.uspto.gov

COPY MAILED

FEB 26 2009

OFFICE OF PETITIONS

GALASSO & ASSOCIATES, LP
P.O. BOX 26503
AUSTIN TX 78755-0503

In re Application of :
Lavalley, et al. :
Application No. 29/244,566 : ON PETITION
Filed: December 12, 2005 :
Attorney Docket No. 1723.050420

This is a decision on the petition under 37 CFR 1.181 to withdraw the holding of abandonment, filed on January 28, 2009.

The petition is **DISMISSED.**

The record reflects that an *Ex Parte Quayle* action was mailed April 14, 2008, allowing a shortened period for reply of two months from its mailing date. A response was not noted prior to the expiration of the period for reply and the application became abandoned on June 15, 2008. A Notice of Abandonment was mailed December 29, 2008.

Petitioner maintains that a timely and proper response was mailed on June 13, 2008.

Section 711.03 of the *Manual of Patent Examining Procedure* provides guidance where, as in this case, petitioner is arguing that a timely response to the Office action was mailed and provides, in pertinent part, that:

> Where a certificate of mailing under 37 CFR 1.8, but not a postcard receipt, is relied upon in a petition to withdraw the holding of abandonment, see 37 CFR 1.8(b) and MPEP § 512. As stated in 37 CFR 1.8(b)(3) the statement that attests to the previous timely mailing or transmission of the correspondence must be on a personal knowledge basis, or to the satisfaction of the Director of the USPTO. If the statement attesting to the previous timely mailing is not made by the person who signed the Certificate of Mailing (i.e., there is no personal knowledge basis), then the statement attesting to the previous timely mailing should include evidence that supports the conclusion that the correspondence was actually mailed (e.g., copies of a mailing log establishing that correspondence was mailed for that application). When the correspondence is shown to have been timely filed based on a certificate of mailing, the correspondence is entered into PALM with the actual date of receipt (i.e., the date that the duplicate copy of the papers was filed with the statement under 37 CFR 1.8).
>
> 37 CFR 1.8(b) also permits applicant to notify the Office of a previous mailing or transmission of correspondence and submit a statement under 37 CFR 1.8(b)(3) accompanied by a duplicate copy of the correspondence when a reasonable amount of time (e.g., more than one month) has elapsed from the time of mailing or transmitting of the correspondence. Applicant does not have to wait until the application becomes abandoned before notifying the Office of the previous mailing or transmission of the correspondence. Applicant should check the private Patent Application Information Retrieval (PAIR) system for the status of the correspondence before notifying the Office. See MPEP § 512.

The instant petition was accompanied by a copy of the response allegedly mailed June 13, 2008. The response contained a certificate of mailing dated June 13, 2008, and signed by Ms. Martha Rocha. The petition document stating that the response was mailed on June 13, 2008, was signed by Mr. Raymond Galasso. No statement of first-hand knowledge of the actual mailing of the response from Ms. Rocha or evidence that supports the conclusion that the correspondence was actually mailed (e.g., copies of a mailing log establishing that correspondence was mailed for that application) accompanied the petition. The renewed petition should be accompanied by a statement from Ms. Rocha and/or evidence that the correspondence was actually mailed.

Alternatively, petitioner may revive the application based on unintentional abandonment under 37 CFR 1.137(b). A grantable petition pursuant to 37 CFR 1.137(b) must be accompanied by the required reply, the required petition fee ($1620.00 for a large entity and $810.00 for a verified small entity), and a statement that the **entire** delay in filing the required reply from the due date for the reply until the filing of a grantable petition pursuant to 37 CFR 1.137(b) was unintentional.

Further correspondence with respect to this matter should be addressed as follows:

United States Patent and Trademark Office
Box 1450
Alexandria, VA 22313-1450

By facsimile: (571) 273-8300
Attn: Office of Petitions

Telephone inquiries concerning this decision should be directed to the undersigned (571) 272-3222.

Kenya A. McLaughlin
Petitions Attorney
Office of Petitions

UNITED STATES PATENT AND TRADEMARK OFFICE

Commissioner for Patents
United States Patent and Trademark Office
P.O. Box 1450
Alexandria, VA 22313-1450
www.uspto.gov

COPY MAILED

MAY 07 2009

OFFICE OF PETITIONS

GALASSO & ASSOCIATES, LP
P.O. BOX 26503
AUSTIN TX 78755-0503

In re Application of :
Lavalley, et al. :
Application No. 29/244,566 : ON PETITION
Filed: December 12, 2005 :
Attorney Docket No. 1723.050420

This is a decision on the "Renewed Petition under 37 CFR 1.47(a)" filed April 17, 2009. The petition will be treated as a renewed petition under 37 CFR 1.181(a) to withdraw the holding of abandonment.

The petition under 37 CFR 1.181(a) to withdraw the holding of abandonment is **granted**.

The record reflects that an *Ex Parte Quayle* action was mailed April 14, 2008, allowing a shortened period for reply of two months from its mailing date. A response was not noted prior to the expiration of the period for reply and the application became abandoned on June 15, 2008. A Notice of Abandonment was mailed December 29, 2008.

Petitioner maintains that a timely and proper response was mailed on June 13, 2008. A copy of the response containing a certificate of mailing under 37 CFR 1.8 dated June 13, 2008, accompanied the petition, along with a statement from Ms. Martha Rocha who signed the certificate under 37 CFR 1.8.

Based on the aforementioned, it appears that the application was improperly held abandoned as a proper response was mailed prior to expiration of the maximum period for reply. The holding of abandonment is withdrawn, accordingly. No petition fee is due.

The application file is being forwarded to the Technology Center GAU 3738 for further review including review of the amendment first deposited June 13, 2008, a copy of which was filed with the instant petition.

Kenya A. McLaughlin
Petitions Attorney
Office of Petitions

UNITED STATES PATENT AND TRADEMARK OFFICE

COMMISSIONER FOR PATENTS
UNITED STATES PATENT AND TRADEMARK OFFICE
P.O. BOX 1450
ALEXANDRIA, VA 22313-1450
www.uspto.gov

QUARLES & BRADY, LLP
411 E. WISCONSIN AVENUE
SUITE 2040
MILWAUKEE, WI 53202-4497

COPY MAILED

FEB 28 2006

OFFICE OF PETITIONS

In re Application of	:	
Stephenson et al.	:	
Application No. 29/244,584	:	DECISION GRANTING
Filed: December 12, 2005	:	STATUS UNDER
Attorney Docket No.	:	37 CFR 1.47(a)
470223.00056	:	

This is in response to a Petition Under 37 CFR 1.47, filed with the application on December 12, 2005, to allow the other inventor(s) to proceed with the application on behalf of himself or herself and the nonsigning inventor.

The petition is **granted**.

The above-identified application and papers have been reviewed and found in compliance with 37 CFR 1.47(a). This application is hereby accorded Rule 1.47(a) status.

Petitioner has shown that the non-signing inventor, Peter Jahnke, cannot be found or reached or refuses to join in the application.

As provided in Rule 1.47(a), this Office will forward notice of this application's filing to the non-signing inventor at the addresses given in the Petition. Notice of the filing of this application will also be published in the Official Gazette.

The application file is being referred to the Office of Initial Patent Examination for continued processing.

Telephone inquiries related to this decision may be directed to the undersigned at (571) 272-3232.

Derek L. Woods
Attorney
Office of Petitions

UNITED STATES PATENT AND TRADEMARK OFFICE

COMMISSIONER FOR PATENTS
UNITED STATES PATENT AND TRADEMARK OFFICE
P.O. BOX 1450
ALEXANDRIA, VA 22313-1450
www.uspto.gov

MSgt. PETER JAHNKE
386 ELRS/LGRA
APO AE 09855

COPY MAILED

FEB 28 2006

OFFICE OF PETITIONS

In re Application of	:	
Stephenson et al.	:	
Application No. 29/244,584	:	
Filed: December 12, 2005	:	LETTER
Attorney Docket No.	:	
470223.00056	:	

Dear MSgt. Jahnke:

You are named as a joint inventor in the above-identified United States patent application filed under the provisions of 35 U.S.C. 116 (United States Code) and 37 CFR 1.47(a), Rules of Practice in Patent Cases. Should a patent be granted on the application you will be designated therein as a joint inventor.

As a named inventor you are entitled to inspect any paper in the file wrapper of the application, order copies of all or any part thereof (at a prepaid cost per 37 CFR 1.19) or make your position of record in the application. Alternatively, you may arrange to do any of the preceding through a registered patent attorney or agent presenting written authorization from you. If you care to join the application, counsel of record (see below) would presumably assist you. Joining in the application would entail the filing of an appropriate oath or declaration by you pursuant to 37 CFR 1.63.

Telephone inquiries regarding this communication should be directed to the undersigned at (571) 272-3232. Requests for information regarding your application should be directed to the File Information Unit at (703) 308-2733. Information regarding how to pay for and order a copy of the application, or a specific paper in the application, should be directed to Certification Division at (703) 308-9726 or 1-800-972-6382 (outside the Washington D.C. area).

Derek L. Woods
Attorney
Office of Petitions

cc: QUARLES & BRADY, LLP
411 E. WISCONSIN AVENUE
SUITE 2040
MILWAUKEE, WI 53202-4497

UNITED STATES PATENT AND TRADEMARK OFFICE

Commissioner for Patents
United States Patent and Trademark Office
P.O. Box 1450
Alexandria, VA 22313-1450
www.uspto.gov

1-13-09

Patent No. : D579,096 S
Ser. No. : 29/244,628
Inventor(s) : Steven E. Guzorek
Issued : October 21, 2008
Title : HOUSING FOR AN INLINE VENT FAN
Docket No. : 10029D000US

Re: Request for Certificate of Correction

Consideration has been given your request for the issuance of a certificate of correction for the above-identified patent under the provisions of Rule(s) 1.322 or 1.323.

Assignees' names and addresses (assignment data) printed in a patent, are based *solely* on information supplied in the appropriate space for identifying the assignment data, i.e., item 3 of the Issue Fee Transmittal Form PTOL-85B. Granting of a request under 37 CFR 3.81(b) is required to correct applicant's error providing ***incorrect or erroneous*** assignment data, *before* issuance of a Certificate of Correction, under 37 CFR 1.323 *(see Manual of Patent Examining Procedures (M.P.E.P) Chp.1400, sect. 1481).* This procedure is required *at any time after the issue fee is paid*, including after issuance of the patent.

In view of the foregoing, your request is hereby denied.

A request to correct the Assignee under 37 CFR 3.81(b) should include:

A. **the processing fee set forth in 37 CFR 1.117(h) (currently $130);**
B. a statement that the failure to include the correct assignee name on the PTOL-85B was inadvertent; and
C. a copy of the Notice of Recordation of Assignment Document, reflecting the reel and frame number where the assignment(s) is recorded and/or reflecting proof of *the date* the assignment was submitted for recordation.

In the Request, Applicant(s) may request that the file be forwarded to Certificates of Correction Branch, for issuance of a Certificate of Correction, if the Request is granted.

Any request under 37 CFR 3.81(b) should be directed to the following address or facsimile number:

By mail: Mail Stop PETITIONS
Commissioner for Patents
Post Office Box 1450
Alexandria, VA 22313-1450

By hand: Customer Service Window
Mail Stop Petitions
Randolph Building
401 Dulany Street
Alexandria, VA 22314

By fax: (703) 872-9306
ATTN: Office of Petitions

If a fee (currently $100) was previously submitted for consideration of a Request for Certificate of Correction, under CFR 1.323, to correct assignment data, , no additional fee is required.

Eva James
For Mary Diggs
Decisions & Certificates
of Correction Branch
(703) **308-9390 ext. 124** or 125

Wood, Phillips, Katz, Clark & Mortimer
Citigroup Center, Suite 3800
500 West Madison Street
Chicago, Illinois 60661

ej

PAGE 2/8 * RCVD AT 12/12/2005 4:50:47 PM [Eastern Standard Time] * SVR:USPTO-EFXRF-6/28 * DNIS:2738300 * CSID: * DURATION (mm-ss):03-28

29/244669

CERTIFICATE OF CERTIFIED MAILING

I hereby certify that this correspondence is being deposited with the United States Patent and Trademark Office by facsimile to Group Art Unit 2913 at (703) 872-9306 on this 12th day of December, 2005.

Carol Green

IN THE UNITED STATES PATENT AND TRADEMARK OFFICE

12-13-05

In re Application of: NORA ROSE THOMAS

Serial No.: Not Yet Assigned 29/244669 29,244,669

Application: Blessed Cross Mezuzah

2913

Commissioner for Patents
Box 1450
Alexandria, Virginia 22313-1450

PETITION TO MAKE SPECIAL UNDER 37 C.F.R. § 1.102(c)

Dear Sir:

This is a Petition to Make Special the above-identified patent application. The basis for this Petition to Make Special is found in 37 C.F.R. § 1.102(c) and MPEP 708.02 which states that a petition to make an application special may be granted without a fee if the basis for the petition is the Applicant's age or health.

The Applicant for the within application is over the age of sixty-five (65) years old. Pursuant to MPEP 708.02, a Sworn Affidavit by Applicant attesting to Applicant's age and a copy of the relevant pages of Applicant's passport is hereby enclosed for your reference. Accordingly, no petition fee is required.

FEB 17 2006

PETITION GRANTED

William Krynski
Special Program Examiner
Technology Center 1700

002/008

UNITED STATES PATENT AND TRADEMARK OFFICE

Commissioner for Patents
United States Patent and Trademark Office
P.O. Box 1450
Alexandria, VA 22313-1450
www.uspto.gov

WENDEROTH, LIND & PONACK, L.L.P.
2033 K STREET N. W.
SUITE 800
WASHINGTON DC 20006-1021

COPY MAILED

MAY 17 2007

OFFICE OF PETITIONS

In re Application of :
NAGOYA, YOSHIKI :
Application No. 29/244736 : DECISION ON PETITION
Filed: 12/14/2005 :
Attorney Docket No. 2005_1957A :

This is a decision on the petition filed December 7, 2006 to withdraw the holding of abandonment for the above-identified application.

On July 11, 2006 the Office mailed a Notice of Allowance and Fee(s) Due, which set a three-month statutory period for reply. In the absence of a timely filed response, the application was held abandoned on October 12, 2006. A Notice of Abandonment was mailed on November 14, 2006.

In the present petition, the practitioner requested that the Office withdraw the holding of abandonment due to non-receipt, remail the Notice of Allowance, and restart the period for reply.

PETITION TO WITHDRAW THE HOLDING OF ABANDONMENT

A review of the record indicates no irregularity in the mailing of the Notice of Allowance, and in the absence of any irregularity in the mailing, there is a strong presumption that the Notice of Allowance was properly mailed to the address of record. This presumption may be overcome by a showing that the Notice of Allowance was not in fact received. The showing required to establish non-receipt of an Office communication must include a statement from the practitioner, stating that the practitioner did not receive the Office communication and attesting to the fact that a search of the file jacket and docket records indicates that the Office communication was not received. A copy of the docket record where the non-received Office communication would have been entered had it been received and docketed must be attached to and referenced in practitioner's statement. See MPEP 711.03(c)(I)(A). For example, if a three-month period for reply was set in the non-received Office communication, a copy of the docket report showing all replies docketed for a date three months from the mail date of the

non-received Office communication must be submitted as documentary proof of non-receipt of the Office communication. The showing outlined above may not be sufficient if there are circumstances that point to a conclusion that the Office communication may have been lost after receipt rather than a conclusion that the Office communication was lost in the mail (*e.g.* if the practitioner has a history of not receiving Office communications).

After reviewing the documents submitted on petition, the Office concludes that the showing of record is sufficient to warrant withdrawal of the holding of abandonment. The practitioner for applicants submitted copies of docket records where the Notice of Allowance would have been entered had it been received and docketed. The practitioner attested to the fact that a search of the file jacket and docket records indicated that the Notice of Allowance was not received. Accordingly, applicants presented the required showing under 37 CFR 1.181.

The petition under 37 CFR 1.181 is **GRANTED**. No petition fee is required.

Technology Center Art Unit 2911 has been advised of this decision. The matter is being referred to the Technology Center's technical support staff for mailing of a new Notice of Allowance. The three (3) month statutory time period for responding to the Notice of Allowance will be set to run from the mailing date of the new Notice of Allowance.

Telephone inquiries related to this decision may be directed to the undersigned at (571) 272-3211.

Christina Tartera Donnell

Christina Tartera Donnell
Senior Petitions Attorney
Office of Petitions

UNITED STATES PATENT AND TRADEMARK OFFICE

Commissioner for Patents
United States Patent and Trademark Office
P.O. Box 1450
Alexandria, VA 22313-1450
www.uspto.gov

JOHN S. PRATT, ESQ.
KILPATRICK STOCKTON, LLP
1100 PEACHTREE STREET
ATLANTA GA 30390

COPY MAILED

FEB 20 2007

OFFICE OF PETITIONS

In re Application of	:	
Marcel Thomassen et al	:	
Application No. 29/244,743	:	ON PETITION
Filed: December 14, 2005	:	
Attorney Docket No. 56997/329054	:	

This is a decision on the petition, filed February 16, 2007, under 37 CFR 1.313(c)(2) to withdraw the above-identified application from issue after payment of the issue fee.

The petition is **DISMISSED**.

Petitioner should be aware that the filing of a petition under 37 CFR 1.313(c)(2), for consideration of a submission under 37 CFR 1.114 (request for continued examination), do **not** apply to **design** applications. However, petitioner may consider filing under 37 CFR 1.313(c)(3), in favor of a continued prosecution application (CPA) under 37 CFR 1.53(d).

Further correspondence with respect to this matter should be addressed as follows:

By mail:	Mail Stop Petitions Commissioner for Patents Post Office Box 1450 Alexandria, VA 22313-1450
By facsimile:	(571) 273-8300 Attn: Office of Petitions
By hand:	Randolf Building 401 Dulany Street Alexandria, VA 22314

Telephone inquiries concerning this decision should be directed to the undersigned at (571) 272-3208.

Karen Creasy

Karen Creasy
Petitions Examiner
Office of Petitions

UNITED STATES PATENT AND TRADEMARK OFFICE

Commissioner for Patents
United States Patent and Trademark Office
P.O. Box 1450
Alexandria, VA 22313-1450
www.uspto.gov

JOHN S. PRATT, ESQ.
KILPATRICK STOCKTON, LLP
1100 PEACHTREE STREET
ATLANTA GA 30309

COPY MAILED

MAR 15 2007

OFFICE OF PETITIONS

In re Application of :
Marcel Thomassen et al :
Application No. 29/244,743 : ON PETITION
Filed: December 14, 2005 :
Attorney Docket No. 56997/329054 :

This is a decision on the petition, filed March 13, 2007, under 37 CFR 1.313(c)(3) to withdraw the above-identified application from issue after payment of the issue fee.

The petition is **GRANTED**.

The above-identified application is withdrawn from issue in favor of a continued prosecution application (CPA) under 37 CFR 1.53(d).

Petitioner is advised that the issue fee paid on September 6, 2006 in the parent application is not refundable nor can it be applied towards any new Notice of Allowance which may issue on the CPA filed March 13, 2007.

Telephone inquiries should be directed to the undersigned at (571) 272-3208.

This matter is being referred to Technology Center AU 2914 for processing of the CPA.

Karen Creasy

Karen Creasy
Petitions Examiner
Office of Petitions

UNITED STATES PATENT AND TRADEMARK OFFICE

COMMISSIONER FOR PATENTS
UNITED STATES PATENT AND TRADEMARK OFFICE
P.O. BOX 1450
ALEXANDRIA, VA 22313-1450
www.uspto.gov

Paper No.

BARLEY SNYDER, LLC
1000 WESTLAKES DRIVE, SUITE 275
BERWYN, PA 19312

COPY MAILED

MAY 26 2006

OFFICE OF PETITIONS

In re Application of :
Tsutomu Kudo :
Application No. 29/244,748 : DECISION ON PETITION
Filed: December 14, 2005 :
Title: DRUG DELIVERY SYSTEMS :
Attorney Docket No. 21334-1540:

This is a decision on "PETITION AND FEE UNDER 37 CFR 1.17(h) AND RESPONSE TO NOTICE OF OMITTED ITEM(S) IN A NONPROVISIONAL APPLICATION" filed March 6, 2006, which is properly treated as a petition under 37 CFR §1.182, requesting, in effect, that the "Notice of Omitted Items in a Nonprovisional Application" mailed January 5, 2006 be withdrawn.

Application papers in the above-identified application were filed on December 14, 2005. However, on January 5, 2006, the Initial Patent Examination Division mailed applicant a "Notice of Omitted Item(s) in a Nonprovisional Application." Applicant was notified that the application papers had been accorded a filing date; however, Figure 32 described in the specification appeared to have been omitted.

In reply, applicant timely filed the instant petition, asserting that the drawing figure, though improperly labelled due to typographical error, was present in the application as filed. Two figures were inadvertently identified as figure 24, causing all subsequent figures to be incorrectly labelled, including Figure 32 as Figure 31. (The application as filed included figures 1-31). Accompanying the petition were three replacement sheets to renumber the incorrectly numbered figures 24-32.

It is obvious from the petition (and a review of the application file) that no drawing was actually missing on December 14, 2005. Rather, the drawing of Figure 32 was simply mislabelled as a result of applicant's filing error. However, the "Notice of Omitted Item(s)" mailed January 5, 2006, was correct in stating that Figure 32 described in the specification appeared to have been omitted. Therefore, the "Notice" was properly mailed and will not be withdrawn.

Accordingly, the petition is DISMISSED to the extent indicated herein.

The petition fee is required, since the petition was not necessary to correct any PTO error.

This application is being forwarded to the Office of Initial Patent Examination for processing with a filing date of December 14, 2005, using the drawings received on that date and the 3 replacement sheets of drawings filed on March 6, 2006 to correct the error in labelling of figures 24-32.

Telephone inquiries related to this decision should be directed to the undersigned at 571-272-3219.

Nancy Johnson
Senior Petitions Attorney
Office of Petitions

UNITED STATES PATENT AND TRADEMARK OFFICE

Commissioner for Patents
United States Patent and Trademark Office
P.O. Box 1450
Alexandria, VA 22313-1450
www.uspto.gov

HESLIN ROTHENBERG FARLEY & MESITI PC
5 COLUMBIA CIRCLE
ALBANY NY 12203

COPY MAILED

MAR 15 2007

OFFICE OF PETITIONS

In re Application of :
John Rizzi :
Application No. 29/244,765 : ON PETITION
Filed: December 14, 2005 :
Attorney Docket No. 0969.072 :

This is a decision on the petition, filed March 14, 2007, under 37 CFR 1.313(c)(3) to withdraw the above-identified application from issue after payment of the issue fee.

The petition is **GRANTED**.

The above-identified application is withdrawn from issue in favor of a continued prosecution application (CPA) under 37 CFR 1.53(d).

Petitioner is advised that the issue fee paid on February 23, 2007 in the parent application is not refundable nor can it be applied towards any new Notice of Allowance which may issue on the CPA filed March 14, 2007.

Telephone inquiries should be directed to the undersigned at (571) 272-3208.

This matter is being referred to Technology Center AU 2911 for processing of the CPA.

Karen Creasy

Karen Creasy
Petitions Examiner
Office of Petitions

UNITED STATES PATENT AND TRADEMARK OFFICE

Commissioner for Patents
United States Patent and Trademark Office
P.O. Box 1450
Alexandria, VA 22313-1450
www.uspto.gov

M. P. Williams
210 Main Street
Manchester, CT 06042

COPY MAILED

MAR 0 9 2006

OFFICE OF PETITIONS

In re Application of :
Ricky W. Selby :
Application No. 29/244,771 : ON PETITION
Filed: December 14, 2005 :
Attorney Docket No.:KP-72 :

This is a decision on the petition under 37 CFR 1.182, filed January 30, 2006, requesting that the "Notice of Omitted Items of Nonprovisional Application" mailed January 6, 2006, be vacated.

The petition is **dismissed as moot**.

On December 14, 2005, the above-identified application was filed. However, on January 6, 2006, the Office of Initial Patent Examination mailed a "Notice of Omitted Items of Nonprovisional Application", stating that application had been accorded a filing date of December 14, 2005, and advising applicant that Figure 6, as described in the specification appeared, to have been omitted.

In response, on January 30, 2006, applicant filed the present petition. However, on February 7, 2006, the Office mailed a "Withdrawal of Previously Sent Notice" which stated that the "Notice of Omitted Items of Non-provisional Application" mailed January 6, 2006, was sent in error. The communication sent February 7, 2006, indicated that the application is complete and would be further processed.

There is no remedy that can be provided by the petition under 37 CFR 1.182; the petition is dismissed as moot, accordingly. Office computer records reflect that the $400.00 has been credited to the deposit account from which it was charged.

The application is being directed to Technology Center 2900, GAU 2915 for further processing.

Telephone inquiries concerning this matter may be directed to the undersigned at (571) 272-3222.

Kenya A. McLaughlin
Petitions Attorney
Office of Petitions

SPE RESPONSE FOR CERTIFICATE OF CORRECTION

Paper No.: _____

DATE : 7-17-07

TO SPE OF : Technology Center 2914 29/244776

SUBJECT : Request for Certificate of Correction on Patent No.: D542403S

A response is requested with respect to the accompanying request for a certificate of correction.

Please complete this form and return with file, within 7 days to:

Palm location **7580, Certificates of Correction Branch – South Tower – 9A22**

If response is for an IFW, **return to employee (named below) via PUBSCofC Team in MADRAS.**

With respect to the change(s) requested, correcting Office and/or Applicant's errors, should the patent read as shown in the certificate of correction (COCIN)? No new matter should be introduced, nor should the scope or meaning of the claims be changed.

Elisha Evans

Thank You For Your Assistance

Certificates of Correction Branch

Tel. No. 703-308-9390 EXT 110

The request for issuing the above-identified correction(s) is hereby:

Note your decision on the appropriate box.

☒ **Approved** — **All** changes apply.

☐ **Approved in Part** — Specify below which changes **do not** apply.

☐ **Denied** — State the reasons for denial below.

Comments:

Print drawings from Artifact Folder 29/244776CA or Supplemental Content.

IAN SIMMONS

SUPERVISORY PATENT EXAMINER

2916

SPE **Art Unit**

UNITED STATES PATENT AND TRADEMARK OFFICE

Commissioner for Patents
United States Patent and Trademark Office
P.O. Box 1450
Alexandria, VA 22313-1450
www.uspto.gov

COPY MAILED

SEP 19 2007

OFFICE OF PETITIONS

ARENT FOX LLP
1050 CONNECTICUT AVENUE, NW
SUITE 400
WASHINGTON, DC 20036

In re Application of
Kunihiko Tachibana
Application No. 29/244,804
Filed: December 15, 2005
Attorney Docket No. 107348-00550

: DECISION GRANTING PETITION

This is a decision on the "Response To Notice Of Incomplete Nonprovisional And Petition For Filing Date", filed March 28, 2006 and which is treated under 37 CFR 1.53.

After the filing of the application, on February 3, 2006, the Office of Initial Patent Examination mailed a "Notice of Incomplete Nonprovisional Application", stating that the application had not been accorded a filing date because the application was deposited without a specification including at least one claim.

In response, the present petition, and a copy of the specification including claims, were filed. Petitioners argue that the specification, including claims, was filed with the other application papers on December 15, 2005. In support of the petition, a copy of petitioner's postcard receipt which shows an official USPTO date-stamp of December 15, 2005, and the above-identified application number, and acknowledges receipt of, *inter alia*, a one page application was supplied.

While the postcard is not itemized to indicate that a specification was supplied with the application papers, petitioner argues that "New Application (1 page)" is the specification which includes the claim all on one page. The evidence is convincing that the application papers deposited on December 15, 2005, included a 1 page specification which included claims. Therefore, the application, including a complete specification including claims, was complete on filing and entitled to a filing date of December 15, 2005.

In view of the above, the petition is **GRANTED**.

The Notice of Incomplete Nonprovisional Application mailed February 3, 2006, is withdrawn. No petition fees are due and none have been charged.

This matter is being referred to the Office of Initial Patent Examination for processing with a filing date of December 15, 2005, using the application papers filed on December 15, 2005 and the papers (specification including claims) supplied on March 28, 2006 with the instant petition.

Telephone inquiries related to this decision should be directed to the undersigned Petitions Attorney at (571) 272-3212.

Patricia Faison-Ball
Senior Petitions Attorney
Office of Petitions

PTO/SB/27 (09-04)
Approved for use through 07/31/2006. OMB 0651-0031
U.S. Patent and Trademark Office; U.S. DEPARTMENT OF COMMERCE
Under the Paperwork Reduction Act of 1995, no persons are required to respond to a collection of information unless it displays a valid OMB control number.

REQUEST FOR EXPEDITED EXAMINATION OF A DESIGN APPLICATION (37 CFR 1.155)

Application Number	TBD
Filing Date	December 15, 2005
First Named Inventor	Lynn M. Muranaka et al.
Title	Icon For A Portion Of A Display Screen
Atty Docket Number	013797.01300

112949 U.S. PTO
29/244806
121505

ADDRESS TO:
MAIL STOP EXPEDITED DESIGN
COMMISSIONER FOR PATENTS
P.O. Box 1450
Alexandria, VA 22313-1450

This is a request for expedited examination of a design application under 37 CFR 1.155.

NOTE: If the Request made by this form accompanies original application papers, include form PTO/SB/18 "Design Patent Application Transmittal" or its equivalent.

A preexamination search was conducted. The field of search was:

Class D14 (subclasses 485, 486, 487, 488, 489, 490, 491, 492, 493, 494, 495); Class D18 (subclasses 24, 25, 26, 27, 28, 29, 30, 31, 32, 33); Class D19 (subclasses 6, 7); Class D20 (subclasses 11, 18); Class D21 (subclasses 324, 325, 326, 327, 328, 329, 330, 331, 332, 333); Class 345 (subclasses 683, 902), Class 715 (subclasses 700-726, 762-867, 973-977)

Related applications: _____

If not previously filed for the above-identified application, the following items required by 37 CFR 1.155 are enclosed:
Formal drawings (see 37 CFR 1.84).
The fee set forth in 37 CFR 1.17(k).
An information disclosure statement in compliance with 37 CFR 1.98.

Approved 1-11-06
Jacqueline M. Stone
Jacqueline M. Stone, Director
Technology Center 1700

Signature	December 15, 2005 (Date)
John M. Fleming (Typed or printed name)	56,536 (Registration Number, if applicable)
(202) 824-3000 (Telephone Number)	

WARNING: Information on this form may become public. Credit card information should not be included on this form. Provide credit card information and authorization on PTO-2038.

This collection of information is required by 37 CFR 1.155. The information is required to obtain or retain a benefit by the public which is to file (and by the USPTO to process) an application. Confidentiality is governed by 35 U.S.C. 122 and 37 CFR 1.11 and 1.14. This collection is estimated to take 6 minutes to complete, including gathering, preparing, and submitting the completed application form to the USPTO. Time will vary depending upon the individual case. Any comments on the amount of time you require to complete this form and/or suggestions for reducing this burden, should be sent to the Chief Information Officer, U.S. Patent and Trademark Office, U.S. Department of Commerce, P.O. Box 1450, Alexandria, VA 22313-1450. DO NOT SEND FEES OR COMPLETED FORMS TO THIS ADDRESS. SEND TO: Mail Stop Expedited Design, Commissioner for Patents, P.O. Box 1450, Alexandria, VA 22313-1450.
If you need assistance in completing the form, call 1-800-PTO-9199 and select option 2.

12/16/2005 CCHAU1 00000063 190733 29244806

04 FC:1802 900.00 DA

PTO/SB/27 (09-04)
Approved for use through 07/31/2006. OMB 0651-0031
U.S. Patent and Trademark Office; U.S. DEPARTMENT OF COMMERCE
Under the Paperwork Reduction Act of 1995, no persons are required to respond to a collection of information unless it displays a valid OMB control number.

REQUEST FOR EXPEDITED EXAMINATION OF A DESIGN APPLICATION (37 CFR 1.155)

Application Number	TBD
Filing Date	December 15, 2005
First Named Inventor	Greg S. Melander et al.
Title	Icon For A Portion Of A Display Screen
Atty Docket Number	013797.01303

ADDRESS TO:
MAIL STOP EXPEDITED DESIGN
COMMISSIONER FOR PATENTS
P.O. Box 1450
Alexandria, VA 22313-1450

Approved 4-6-06
Jacqueline M. Stone
Jacqueline M. Stone, Director
Technology Center 1700

112949 U.S.PTO
29/244807
121505

This is a request for expedited examination of a design application under 37 CFR 1.155.

NOTE: If the Request made by this form accompanies original application papers, include form PTO/SB/18 "Design Patent Application Transmittal" or its equivalent.

A preexamination search was conducted. The field of search was:

Class D14 (subclasses 485, 486, 487, 488, 489, 490, 491, 492, 493, 494, 495); Class D18 (subclasses 24, 25, 26, 27, 28, 29, 30, 31, 32, 33); Class D19 (subclasses 6, 7); Class D20 (subclasses 11, 18); Class D21 (subclasses 324, 325, 326, 327, 328, 329, 330, 331, 332, 333); Class 345 (subclasses 683, 902), Class 715 (subclasses 700-726, 762-867, 973-977)

Related applications: _____

If not previously filed for the above-identified application, the following items required by 37 CFR 1.155 are enclosed:
Formal drawings (see 37 CFR 1.84).
The fee set forth in 37 CFR 1.17(k).
An information disclosure statement in compliance with 37 CFR 1.98.

J. M. F.
Signature

December 15, 2005
Date

John M. Fleming
Typed or printed name

56,536
Registration Number, if applicable

(202) 824-3000
Telephone Number

WARNING: Information on this form may become public. Credit card information should not be included on this form. Provide credit card information and authorization on PTO-2038.

This collection of information is required by 37 CFR 1.155. The information is required to obtain or retain a benefit by the public which is to file (and by the USPTO to process) an application. Confidentiality is governed by 35 U.S.C. 122 and 37 CFR 1.11 and 1.14. This collection is estimated to take 6 minutes to complete, including gathering, preparing, and submitting the completed application form to the USPTO. Time will vary depending upon the individual case. Any comments on the amount of time you require to complete this form and/or suggestions for reducing this burden, should be sent to the Chief Information Officer, U.S. Patent and Trademark Office, U.S. Department of Commerce, P.O. Box 1450, Alexandria, VA 22313-1450. DO NOT SEND FEES OR COMPLETED FORMS TO THIS ADDRESS. SEND TO: Mail Stop Expedited Design, Commissioner for Patents, P.O. Box 1450, Alexandria, VA 22313-1450.
If you need assistance in completing the form, call 1-800-PTO-9199 and select option 2.

12/16/2005 CCHAU1 00000062 190733 29244807
04 FC:1802 900.00 DA

UNITED STATES PATENT AND TRADEMARK OFFICE

Commissioner for Patents
United States Patent and Trademark Office
P.O. Box 1450
Alexandria, VA 22313-1450
www.uspto.gov

Hershkovitz & Associates, LLC
2845 Duke Street
Alexandria VA 22314

COPY MAILED

MAY 12 2008

OFFICE OF PETITIONS

In re Application of

Akos Juhasz

Application No. 29/244,816

Filed: December 15, 2005

Attorney Docket No. D01243

DECISION ON PETITION

This is a decision on the petition under 37 CFR 1.137(b), filed January 28, 2008, and in supplement on February 8, 2008, to revive the above-identified application.

The petition is **GRANTED**.

The above-cited application became abandoned for failure to reply in a timely manner to the Notice of Allowability mailed August 31, 2007, which set a statutory period for reply of three (3) months from its mailing date. The Notice of Allowability required corrected drawings to be filed. Accordingly, the application became abandoned on December 1, 2007. A Notice of Abandonment was mailed on January 10, 2008.

The corrected drawings filed January 28, 2008, is noted.

The terminal disclaimer filed January 28, 2008, is also noted.

It is noted that the request under 37 CFR 1.183 to waive the requirements of 37 CFR 1.137(d) made in the petition filed January 28, 2008, is rendered moot by petitioner's supplemental filing on February 8, 2008, and the filing of the terminal disclaimer on February 8, 2008.

Deposit account 50-2929 will be charged $65.00 for the terminal disclaimer fee.

The application is being forwarded to the Office of Data Management for further processing.

Telephone inquiries concerning this decision should be directed to the undersigned at (571) 272-3222.

Kenya A. McLaughlin
Petitions Attorney
Office of Petitions

UNITED STATES PATENT AND TRADEMARK OFFICE

Commissioner for Patents
United States Patent and Trademark Office
P.O. Box 1450
Alexandria, VA 22313-1450
www.uspto.gov

COPY MAILED

APR 30 2007

OFFICE OF PETITIONS

HANLEY, FLIGHT & ZIMMERMAN, LLC
150 S. WACKER DRIVE
SUITE 2100
CHICAGO, IL 60606

In re Application of :
Damon Oliver Troutman :
Application No. 29/244,887 : DECISION DISMISSING
Filed: December 15, 2005 : PETITION
Attorney Docket No.: 20014/10066A :

This is a decision on the "Statement and/or Petition Correcting the Continued Prosecution Application (CPA) Transmittal", filed July 12, 2006.

The petition is **dismissed**.

The application is also **ABANDONED.**

A review of the application file reveals that a Notice of Allowance and Issue Fee Due was mailed on March 1, 2006, allowing a statutory period for reply of three months from its mailing date. On April 17, 2006, applicant filed a Request for Continued Examination (RCE) under 37 CFR 1.114. The RCE was not entered because it is not proper as the provisions of 37 CFR 1.114 do not apply to design applications. See 37 CFR 1.114(e). No further response to the Notice of Allowance and Issue Fee Due was received within the statutory period set for reply. The application became abandoned on June 2, 2006, accordingly.

Petitioner is advised that the undersigned made several inquiries regarding the possibility of converting an improper RCE to a Continued Prosecution of Application. It is not possible to convert an improper RCE to a CPA. Further to this point, Section 201.06(d) of the *Manual of Patent Examining Procedure*, provides, in pertinent part that, " . . . request for continued examination (RCE) practice under 37 CFR 1.114 is not available in design applications. Any improper RCE filed in a design application will not be treated as a CPA. An improper RCE filed in a design application will not toll the running of any time period for reply." In this case, petitioner must file a petition under 37 CFR 1.137(b) to revive the subject application and file a continued prosecution application. The subject application must be revive under 37 CFR 1.137(b) to revive the application in order to establish co-pendency between the subject application and the CPA. Once the petition to revive the application is granted, the subject application will again be abandoned in favor of the CPA.

Further correspondence with respect to this matter should be addressed as follows:

By mail: Commissioner for Patents
United States Patent and Trademark Office
Box 1450
Alexandria, VA 22313-1450

By facsimile: (571) 273-8300
Attn: Office of Petitions

Telephone inquiries concerning this decision may be directed to the undersigned at (571) 272-3222.

Kenya A. McLaughlin
Petitions Attorney
Office of Petitions

UNITED STATES PATENT AND TRADEMARK OFFICE

Commissioner for Patents
United States Patent and Trademark Office
P.O. Box 1450
Alexandria, VA 22313-1450
www.uspto.gov

ROBERT F HELFING
18TH FLOOR
801 SOUTH FIGUEROA STREET
LOS ANGELES CA 90017-5556

COPY MAILED

JUN 21 2007

OFFICE OF PETITIONS

In re Application of	:	
Jay Kassir	:	
Application No. 29/244,904	:	ON PETITION
Filed: December 14, 2005	:	
Title: Hookah	:	

This is a decision on the petition to revive an unintentionally abandoned application under 37 CFR 1.137(b), filed May 25, 2007.

The petition under 37 CFR 1.137(b) is **GRANTED**.

The above-identified application became abandoned for failure to timely pay the issue fee in response to the Notice of Allowance mailed November 16, 2006. This notice set a statutory period for reply of three (3) months. No issue fee having been received, the application became abandoned on February 17, 2007. A Notice of Abandonment was mailed on March 28, 2007.

With the instant petition, applicants paid the petition fee, made the proper statement of unintentional delay, submitted a terminal disclaimer, and paid the issue fee.

The matter is being forwarded to the Office of Patent Publication for processing into a patent.

Telephone inquiries related to this decision should be directed to the undersigned at (571)272-3207.

Cliff Congo
Petitions Attorney
Office of Petitions

UNITED STATES PATENT AND TRADEMARK OFFICE

Commissioner for Patents
United States Patent and Trademark Office
P.O. Box 1450
Alexandria, VA 22313-1450
www.uspto.gov

SALIWANCHIK LLOYD & SALIWANCHIK
A PROFESSIONAL ASSOCIATION
PO BOX 142950
GAINESVILLE FL 32614-2950

COPY MAILED

MAR 0 4 2008

OFFICE OF PETITIONS

In re Application of
Gander et al.
Application No. 29/244,949
Filed: December 15, 2005
Attorney Docket No. GJE-7934DP
Title of Invention: Pharmaceutical Dispensing Device

DECISION ON PETITION

This is in response to the "Petition Under 37 CFR 1.47(a) to Accept Application Without Signature of Joint Inventor" This petition is properly treated as a waiver under 37 CFR 1.183 of requirement for a fully executed supplemental Declaration under 37 CFR 1.67 filed January 8, 2008.[1]

The petition is **Dismissed**.

Any request for reconsideration should be filed within TWO MONTHS of the mailing date of this decision in order to be considered timely. 37 CFR 1.181(f). This time period may **not** be extended pursuant to 37 CFR 1.136.

The above-identified application was filed on December 15, 2005. A fully executed declaration was submitted on January 17, 2006. The August 8, 2007 Quayle Ex Parte action required a supplemental declaration.

Once an application has received a fully executed oath or declaration and been placed on the files for examination, the provisions of 37 CFR 1.47 no longer apply. Rather the remedy for treating an inventor's refusal to sign a supplemental declaration is waiver of 37 CFR 1.67. See MPEP 603.

When an inventor who executed the original declaration is refusing or cannot be found to execute a required supplemental declaration, the requirement for that inventor to sign

[1] 37 CFR 1.47 only applies when an inventor refuses to sign the original 37 CFR 1.63 oath or declaration.

the supplemental declaration may be suspended or waived in accordance with 37 CFR 1.183. It is appropriate to apply the principles of 37 CFR 1.47 thereof to the situation at hand. All available joint inventor(s) must sign the supplemental declaration on behalf of themselves, if appropriate and on behalf of the non-signing inventor. See MPEP 409.03(a).

In order for a petition under 37 CFR 1.183 to be granted to waive this requirement that joint inventor Scoutas sign the supplemental declaration, petitioner must demonstrate that this is an extraordinary situation where justice requires waiver of the rules.

On petition, applicant contends a letter, declaration and power of attorney were sent via Royal Mail. The letter was returned to sender because the package was never accepted. Petitioner has failed to establish that inventor Scoutas has refused to execute the application papers or that Scoutas cannot be found or reached after diligent effort.

Where an inventor cannot be located/reached as in the case of inventor Scoutas, rule 47 applicant must demonstrate "diligent effort" was made to find or reach the non-signing inventor. See MPEP 409.03(d). The evidence provided shows that petitioner sent one letter to the last known address of inventor Scoutas which was not claimed. No evidence has been provided to establish that inventor Scoutas continued to reside or receive mail at the last known address. Further petitioner has not provided any evidence that an attempt was made to locate the inventor upon the receipt of the returned letter. Such a showing is not sufficient to establish diligent effort was used to locate inventor Scoutas. Copies of documentary evidence such as internet searches, searches of foreign registry and telephone books, certified mail return receipts, cover letters of instructions, telegrams, telephone call to the last known telephone number that support a finding that the nonsigning inventor could not be found or reached should be made part of the statement. The steps taken to locate the whereabouts of the nonsigning inventor should be included in a statement of facts. It is important that the statement contain facts as opposed to conclusions.

Insufficient evidence has been provided to establish that inventor Scoutas has refused to accept the November 22, 2006. The record is not clear that Scoutas continues to receive mail at the address provided.

It also noted that the address provided on the supplemental declaration is that of a business where inventor Scoutas no longer is employed. The address provided on the declaration should be the last known address of the inventor. If the inventor is located, the declaration should include his mailing address.

The Office is in receipt of the $200.00 petition fee. However, the petition fee for a petition considered under 37 CFR 1.183 is $400.00. Accordingly, deposit account no. 19-0065 will be charged the $200.00 difference.

Further correspondence with respect to this matter should be addressed as follows:

By mail:	Mail Stop Petition Commissioner for Patents P.O. Box 1450 Alexandria, VA 22313-1450
By facsimile:	(571) 273-8300
By delivery service: (FedEx, UPS, DHL, etc.)	U.S. Patent and Trademark Office Customer Service Window, Randolph Building 401 Dulany Street Alexandria, VA 22314

Telephone inquiries regarding this decision should be directed to the undersigned at (571) 272-3215.

Charlema R. Grant
Petitions Attorney
Office of Petitions

UNITED STATES PATENT AND TRADEMARK OFFICE

Commissioner for Patents
United States Patent and Trademark Office
P.O. Box 1450
Alexandria, VA 22313-1450
www.uspto.gov

SALIWANCHIK LLOYD & SALIWANCHIK
A PROFESSIONAL ASSOCIATION
PO BOX 142950
GAINESVILLE FL 32614-2950

COPY MAILED

JUN 09 2008

OFFICE OF PETITIONS

In re Application of
Gander et al.
Application No. 29/244,949
Filed: December 15, 2005
Attorney Docket No. GJE-7934DP
Title of Invention: Pharmaceutical Dispensing Device

DECISION ON PETITION

This is in response to the petition filed under 37 CFR 1.183 seeking waiver of the requirement for a fully executed supplemental declaration filed May 5, 2008.

The petition is **Dismissed**.

Any request for reconsideration should be filed within TWO MONTHS of the mailing date of this decision in order to be considered timely. 37 CFR 1.181(f). This time period may **not** be extended pursuant to 37 CFR 1.136.

The above-identified application was filed on December 15, 2005. A fully executed declaration was submitted on January 17, 2006. The August 8, 2007 Quayle Ex Parte action required a supplemental declaration. A petition filed under 37 CFR 1.47 was treated and dismissed under 37 CFR 1.183 on March 4, 2008.

When an inventor who executed the original declaration is refusing or cannot be found to execute a required supplemental declaration, the requirement for that inventor to sign the supplemental declaration may be suspended or waived in accordance with 37 CFR 1.183. It is appropriate to apply the principles of 37 CFR 1.47 thereof to the situation at hand. All available joint inventor(s) must sign the supplemental declaration on behalf of themselves, if appropriate and on behalf of the non-signing inventor. See MPEP 409.03(a).

In order for a petition under 37 CFR 1.183 to be granted to waive this requirement that joint inventor Scoutas sign the supplemental declaration, petitioner must demonstrate that this is an extraordinary situation where justice requires waiver of the rules.

On renewed petition, applicant has provided a statement from Gwendolyn L. Daniels. Agent Daniels states that Susanne Davies, intellectual property administrator at Sosei R& D, Ltd, mailed a letter which included a new declaration to inventor Scoutas on November 22, 2007. The letter was returned because inventor Scoutas did not come and collect the mail. No evidence such as a copy of the returned enevelope has been provided. Agent Daniels states that she was informed that Ms. Davies made "diligent and appropriate efforts to contact Mr. Scoutas, but there is no listing for him in the telephone directory. Also all efforts to find new contact information has been to no avail." The statement provided by Agent Daniels does not provide firsthand knowledge of the efforts made in an attempt to locate the non-signing inventor. Further the statements are conclusions which are not supported by evidence.

Petitioner has failed to establish that inventor Scoutas has refused to execute the application papers or that Scoutas cannot be found or reached after diligent effort. It is not sufficient to state that diligent effort was made in attempt to locate a non-signing inventor. Where inability to find or locate a named inventor(s) is alleged, a statement of facts should be submitted that fully describes the exact facts which are relied on to establish that a *diligent effort* was made to locate the inventor. Petitioner states that a listing in the phone directory was not located, but evidence of this has not been provided.

In this regard, petitioner should, at the very least, conduct a search of the regional or national registry(s). The results of such search should be made in any future petition for reconsideration. *See* MPEP 409.03(d). Additionally, petitioner should state whether he has access to inventor Scoutas' personnel records and, if so, what does inspection of the records reveal as to a current address, forwarding address, or an address of the nearest living relative? If the papers are returned and all other attempts to locate or reach the inventor, e.g., through personnel records, co-workers, E-mail, the Internet or the telephone, etc., continue to fail, then applicant will have established that the inventor cannot be reached after diligent effort or has refused to join in the application. **The statements of facts must be signed, where at all possible, by a person having firsthand knowledge of the facts recited therein and should be accompanied by documentary evidence in support of the statement of facts. It is important that the forthcoming communication contain statements of fact as opposed to conclusions**..

Insufficient evidence has been provided to establish that inventor Scoutas has refused to accept the November 22, 2007. The record is not clear that Scoutas continues to receive mail at the address provided.

It also noted that the address provided on the supplemental declaration is that of a business where inventor Scoutas no longer is employed. The address provided on the declaration should be the last known address of the inventor. If the inventor is located,

the declaration should include his mailing address.

Further correspondence with respect to this matter should be addressed as follows:

By mail:	Mail Stop Petition Commissioner for Patents P.O. Box 1450 Alexandria, VA 22313-1450
By facsimile:	(571) 273-8300
By delivery service: (FedEx, UPS, DHL, etc.)	U.S. Patent and Trademark Office Customer Service Window, Randolph Building 401 Dulany Street Alexandria, VA 22314

Telephone inquiries regarding this decision should be directed to the undersigned at (571) 272-3215.

Charlema R. Grant
Petitions Attorney
Office of Petitions

UNITED STATES PATENT AND TRADEMARK OFFICE

Commissioner for Patents
United States Patent and Trademark Office
P.O. Box 1450
Alexandria, VA 22313-1450
www.uspto.gov

SALIWANCHIK LLOYD & SALIWANCHIK
A PROFESSIONAL ASSOCIATION
PO BOX 142950
GAINESVILLE FL 32614-2950

COPY MAILED

NOV 10 2008

In re Application of
Gander et al.
Application No. 29/244,949
Filed: December 15, 2005
Attorney Docket No. GJE-7934DP
Title of Invention: Pharmaceutical Dispensing Device

DECISION ON PETITION

This is a decision on the renewed petition as a waiver under 37 CFR 1.183 of requirement for a fully executed supplemental Declaration under 37 CFR 1.67 filed August 7, 2008.

The petition is **Granted**.

The above-identified application was filed on December 15, 2005. A fully executed declaration was submitted on January 17, 2006. The August 8, 2007 Quayle Ex Parte action required a supplemental declaration. A petition filed under 37 CFR 1.47 was treated and dismissed under 37 CFR 1.183 on March 4, 2008. A petition filed under 37 CFR 1.183 was dismissed on June 9, 2008.

When an inventor who executed the original declaration is refusing or cannot be found to execute a required supplemental declaration, the requirement for that inventor to sign the supplemental declaration may be suspended or waived in accordance with 37 CFR 1.183. It is appropriate to apply the principles of 37 CFR 1.47 thereof to the situation at hand. All available joint inventor(s) must sign the supplemental declaration on behalf of themselves, if appropriate and on behalf of the non-signing inventor. See MPEP 409.03(a).

In order for a petition under 37 CFR 1.183 to be granted to waive this requirement that joint inventor Scoutas sign the supplemental declaration, petitioner must demonstrate that this is an extraordinary situation where justice requires waiver of the rules.

On renewed petition, applicants have set forth the steps taken to obtain inventor Scoutas signature on the supplemental declaration. Applicants have shown that diligent effort has been used to locate inventor Scoutas to present the supplemental declaration to inventor Basset.

Petitioner has shown that the non-signing inventor Scoutas cannot be reached or located and diligent effort has been used to locate the inventor. The efforts outlined by petitioner demonstrate diligent effort was used to attempt to locate non-signing inventor. The declaration presented is signed by inventor Gander on behalf of Scoutas. Under the circumstances, it is concluded that petitioner has demonstrated that this is an extraordinary situation requiring waiver of the rules.

This application does not have any Rule 1.47(a) status and no such status should appear on the file wrapper.

This application is being referred to Technology Center AU 2912 for appropriate action by the Examiner in the normal course of business.

Telephone inquiries regarding this decision should be directed to the undersigned at (571) 272-3215.

Charlema R. Grant

Charlema R. Grant
Petitions Attorney
Office of Petitions

UNITED STATES PATENT AND TRADEMARK OFFICE

Commissioner for Patents
United States Patent and Trademark Office
P.O. Box 1450
Alexandria, VA 22313-1450
www.uspto.gov

July 16, 2007

Patent No. : D541824 S
Ser. No. : 29/244966
Inventor(s) : Yanagida, et al.
Issued : May 1, 2007
Title : **CONTROL LEVER FOR CONSTRUCTION EQUIPMENT**
Docket No. : 31103 USA

Re: Request for Certificate of Correction

Consideration has been given your request for the issuance of a certificate of correction for the above-identified patent.

Comparison of the patent on Title Page (54), with the corresponding location in the application file reveals that there is no discrepancy.

In view of the foregoing, your request is hereby denied.

Elisha Evans
For Cecelia Newman, Supervisor
Decisions & Certificates
of Correction Branch
(703) 308-9390 ext. 110

SYNNESTVEDT & LECHNER, LLP
1101 MARKET STREET
26TH FLOOR
PHILADELPHIA PA 19107-2950

CBN/eme

SPE RESPONSE FOR CERTIFICATE OF CORRECTION

Paper No.: _____

DATE : July 15, 2009

TO SPE OF : ART UNIT 2912
SUBJECT : Request for Certificate of Correction for Appl. No.: 29/244966/D541824

Please respond to this request for a certificate of correction within 7 days.

FOR IFW FILES:

Please review the requested changes/corrections as shown in the **COCIN** document(s) in the IFW application image. No new matter should be introduced, nor should the scope or meaning of the claims be changed.

Please complete the response (see below) and forward the completed response to scanning using document code **COCX**.

FOR PAPER FILES:

Please review the requested changes/corrections as shown in the attached certificate of correction. Please complete this form (see below) and forward it with the file to:

Certificates of Correction Branch (CofC)
South Tower - 9A22
Palm Location 7580

Magdalene Talley
Certificates of Correction Branch
703-308-9390 ext. 120

Thank You For Your Assistance

The request for issuing the above-identified correction(s) is hereby:
Note your decision on the appropriate box.

☐ **Approved**	All changes apply.
☐ **Approved in Part**	Specify below which changes **do not** apply.
☒ **Denied**	State the reasons for denial below.

Comments: As there is no antecedent basis to change the title from "Control lever for Construction Equipment" to "Armrest for Construction Equipment" the request is denied. Such amendment would render New matter under 35, USC 112.

STELLA M. REID
SUPERVISORY PATENT EXAMINER

2912
Art Unit

UNITED STATES PATENT AND TRADEMARK OFFICE

Commissioner for Patents
United States Patent and Trademark Office
P.O. Box 1450
Alexandria, VA 22313-1450

Serial no. : 29/244966
Date Mailed : December 16, 2009
Patent No. : D541824 S
Patent Issued : May 1, 2007
Inventor(s) : Kazuo Suzuki
Title: CONTROL LEVER FOR CONSTRUCTION EQUIPMENT

Re: Request for Reconsideration for Certificate of Correction

Consideration has been given your request for the issuance of a certificate of correction for the above identified patent.

Respecting the alleged errors noted in your request, as there is no antecedent basis t change the title from "Control Lever for Construction Equipment" to Armrest for Construction Equipment" the request is denied, such amendment would render new mater under 35. USC 112.

In view of the foregoing your request is hereby denied.

Magdalene Talley`
For Mary Diggs, Supervisor
Decisions and Certificate
Of Correction Branch
(571)272-0423
Fax (571)270-9942

Mark D. Simpson
Synnestvedt & Lechner LLP
101 Market Street, Ste. 260
Philadelphia, PA 19107

MD/mt

UNITED STATES PATENT AND TRADEMARK OFFICE

Commissioner for Patents
United States Patent and Trademark Office
P.O. Box 1450
Alexandria, VA 22313-1450
www.uspto.gov

COPY MAILED

JUL 06 2007

OFFICE OF PETITIONS

BACHMAN & LAPOINTE, P.C.
900 CHAPEL STREET
SUITE 1201
NEW HAVEN, CT 06510

In re Patent No. D526,498
Application No. 29/244,972
Filing Date: December 16, 2005
Issue Date: August 15, 2006
Attorney Docket No. 05-779

DECISION GRANTING PETITION

This is a decision on the petition under 37 CFR 1.182, filed March 9, 2007, requesting issuance of duplicate Letters of Patent for the above-identified patent.

The petition is **granted**.

The file record discloses that the instant application matured into U.S. Patent No. D526,498 on August 15, 2006. Petitioner contends, however, that the patent was never received and it is presumed lost in the mail.

In view of the facts set forth in the petition, it is concluded that the patent was never received. The Publishing Division is directed to issue duplicate Letters of Patent.

Any questions concerning this decision may be directed to the undersigned at (571)272-3222. Any questions concerning issuance of the duplicate Letter of Patent should be directed to Krystal Paige at (703)308-9250.

A copy of this decision is being forwarded to the Publishing Division for issuance of a duplicate Letter of Patent.

Kenya A. McLaughlin
Petitions Attorney
Office of Petitions

cc: Krystal Paige, P/OPPD, Crystal Park 3-910 (Fax 571-270-9937)

Law Offices of
DENNIS W. BEECH

Mailing Address:
Law Offices of Dennis W. Beech
P.O. Box 519
Murrieta, CA 92564
Telephone (951) 894-1581
Fax: (951) 894-1049

Huntington Beach (714) 378-0212
Palmdale/Lancaster (661) 273-0503
Brea/Ontario (909) 986-4624
Bakersfield (661) 821-6911
Fax (951) 894-1049

Please Note Our New Mailing Address

December 16, 2005

Mail Stop Patent Application
Commissioner for Patents
Group Director of Group Unknown
P.O. Box 1450
Alexandria, VA 22313-1450

Dear Commissioner:

Enclosed is a petition to make special for:

Serial Number:	Unknown 29/244984
Applicant:	William J. Thompson
Filing Date:	With Application 12-15-05
Group Art Unit:	Unknown 2913
Examiner:	Unknown
For:	ELASTIC BRACKET FOR SUPPORT OF CONDUIT, CABLE, WIRE AND THE LIKE ON A HANGER BODY.

PETITION TO MAKE SPECIAL BECAUSE OF APPLICANTS AGE
37 CFR 1.102 (c) and MPEP 708.02 IV

Applicant hereby petitions to make this application special because applicant is over 65 years of age.

As a showing of this fact, accompanying this petition is:

A declaration by the applicant that he/she is over 65 years of age.

No fee is required with this petition in accordance with 37 CFR 1.102 (c).

If you have any questions, please do not hesitate to contact me.

Sincerely,

DENNIS W. BEECH
Reg. No.: 35443

DWB/ab
Enclosure

PETITION GRANTED

William Krynski,
Special Program Examiner
Technology Center 1700

JAN 30 2006

Law Offices of
DENNIS W. BEECH

Mailing Address:
Law Offices of Dennis W. Beech
P.O. Box 519
Murrieta, CA 92564
Telephone (951) 894-1581
Fax: (951) 894-1049

Huntington Beach (714) 378-0212
Palmdale/Lancaster (661) 273-0503
Brea/Ontario (909) 986-4624
Bakersfield (661) 821-6911
Fax (951) 894-1049

Please Note Our New Mailing Address

December 16, 2005

Mail Stop Patent Application
Commissioner for Patents
Group Director of Group Unknown
P.O. Box 1450
Alexandria, VA 22313-1450

Dear Commissioner:

Enclosed is a petition to make special for:

Serial Number:	Unknown 29/244997
Applicant:	William J. Thompson
Filing Date:	With Application 12-15-05
Group Art Unit:	Unknown
Examiner:	Unknown 2913
For:	HOOK ROD AND SLIDE FASTENER FOR SUPPORT OF CONDUIT, CABLE, WIRE AND THE LIKE

PETITION TO MAKE SPECIAL BECAUSE OF APPLICANTS AGE
37 CFR 1.102 (c) and MPEP 708.02 IV

Applicant hereby petitions to make this application special because applicant is over 65 years of age.

As a showing of this fact, accompanying this petition is:

A declaration by the applicant that he/she is over 65 years of age.

No fee is required with this petition in accordance with 37 CFR 1.102 (c).

If you have any questions, please do not hesitate to contact me.

Sincerely,

DENNIS W. BEECH
Reg. No.: 35443

DWB/ab
Enclosure

PETITION GRANTED

William Krynski,
Special Program Examiner
Technology Center 1700

JAN 30 2006

UNITED STATES PATENT AND TRADEMARK OFFICE

Commissioner for Patents
United States Patent and Trademark Office
P.O. Box 1450
Alexandria, VA 22313-1450
www.uspto.gov

BOURQUE & ASSOCIATES, P.A.
835 HANOVER STREET
SUITE 303
MANCHESTER NH 03104

COPY MAILED

MAR 0 9 2006

OFFICE OF PETITIONS

In re Application of :
George Chandler :
Application No. 29/245,004 : DECISION GRANTING PETITION
Filed: December 13, 2005 :
Attorney Docket No HUBBARD-D005XX :

This is a decision on the paper titled "Response to Notice to File Missing Parts", filed February 6, 2006, which is treated as a petition under 37 CFR 1.182.

The instant application was filed December 13, 2005 and a filing date was accorded. However, a Notice to File Missing Parts mailed January 10, 2006 indicated that the Oath or Declaration was missing.

Petitioner asserts that the Oath or Declaration was among the papers filed on December 13, 2005 and submits, *inter alia*, a "legible" postcard receipt in evidence thereof. The postcard receipt, identifies the application and acknowledges, inter alia, that the application included a two page oath or declaration and bears a United States Patent and Trademark Office date-stamp of December 13, 2005. Additionally, the postcard receipt lacks any notation of non-receipt of any item listed. In view thereof, the evidence submitted supports the claim that the oath or declaration was timely filed and thus, the petition is **GRANTED.**

Given the basis for granting the petition, no petition fee or surcharge for late filing of the oath or declaration is due and none has been charged

This application is being forwarded to the Office of Initial Patent Examination (OIPE) for further processing, using the application papers received in the Office on December 13, 2005 and the oath or declaration submitted with the petition on February 6, 2006.

Telephone inquiries regarding this decision should be directed to the undersigned Petitions Attorney at (571) 272-3212.

Patricia Faison-Ball

Patricia Faison-Ball
Senior Petitions Attorney
Office of Petitions

SPE RESPONSE FOR CERTIFICATE OF CORRECTION

Paper No.: _____

DATE : 8-12-08

TO SPE OF : ART UNIT 2911

SUBJECT : Request for Certificate of Correction for Appl. No.: 29/245014 Patent No.: D547629

Please respond to this request for a certificate of correction within 7 days.

FOR IFW FILES:

Please review the requested changes/corrections as shown in the **COCIN** document(s) in the IFW application image. No new matter should be introduced, nor should the scope or meaning of the claims be changed.

Please complete the response (see below) and forward the completed response to scanning using document code **COCX**.

FOR PAPER FILES:

Please review the requested changes/corrections as shown in the attached certificate of correction. Please complete this form (see below) and forward it with the file to:

Certificates of Correction Branch (CofC)
South Tower - 9A22
Palm Location 7580

E Young
Certificates of Correction Branch
703-308-9390 ext. 117

Thank You For Your Assistance

The request for issuing the above-identified correction(s) is hereby:
Note your decision on the appropriate box.

- ☑ **Approved** — All changes apply.
- ☐ **Approved in Part** — Specify below which changes **do not** apply.
- ☐ **Denied** — State the reasons for denial below.

Comments: _____

CATHRON C. BROOKS
SUPERVISORY PATENT EXAMINER

_____ 2911
SPE **Art Unit**

UNITED STATES PATENT AND TRADEMARK OFFICE

Commissioner for Patents
United States Patent and Trademark Office
P.O. Box 1450
Alexandria, VA 22313-1450
www.uspto.gov

MICHAEL FRISCIA
MCCARTER & ENGLISH, LLP
FOUR GATEWAY CENTER
100 MULBERRY STREET
NEWARK, NJ 07102

COPY MAILED

APR 17 2007

OFFICE OF PETITIONS

In re Application of :
David Rabe :
Application No. 29/245,019 : DECISION ON PETITION
Filed: December 16, 2005 : TO WITHDRAW
Attorney Docket No. 99811/00006 : FROM RECORD
:

This is a decision on the Request to Withdraw as attorney or agent of record under 37 C.F.R. § 1.36(b), filed October 2, 2006.

The request is **APPROVED**.

A grantable request to withdraw as attorney/agent of record must be signed by every attorney/agent seeking to withdraw or contain a clear indication that one attorney is signing on behalf of another/others. A request to withdraw will not be approved unless at least 30 (thirty) days would remain between the date of approval and the later of the expiration date of a time to file a response or the expiration date of the maximum time period which can be extended under 37 C.F.R. § 1.136(a).

The request was signed by Michael R. Friscia on behalf of all attorneys of record who are associated with customer No. 27614.

All attorneys/agents associated with the Customer Number 27614 have been withdrawn.

Applicant is reminded that there is no attorney of record at this time.

All future correspondence will be directed to inventor David Rabe at the address indicated below.

Telephone inquiries concerning this decision should be directed to Diane Goodwyn at 571-272-6735.

There are no pending Office actions pending at the present time.

April Wise
Petitions Examiner
Office of Petitions

cc: DAVID RABE
29 OVERLOOK ROAD
CHATHAM, NJ 07928

UNITED STATES PATENT AND TRADEMARK OFFICE

COMMISSIONER FOR PATENTS
UNITED STATES PATENT AND TRADEMARK OFFICE
P.O. BOX 1450
ALEXANDRIA, VA 22313-1450
www.uspto.gov

ROSENBERG, KLEIN & LEE
3458 ELLICOTT CENTER DRIVE-SUITE 101
ELLICOTT CITY MD 21043

COPY MAILED

JUN 20 2008

In re Application of :
Huang, et al. : DECISION ON PETITION
Application No. 29/245,027 :
Filed: December 19, 2005 :
Atty. Dkt. No.: MR1115-664 :

This decision is in response to the petition to withdraw the holding of abandonment under 37 CFR 1.181 filed May 20, 2008.

The petition under 37 CFR 1.181 to withdraw the holding of abandonment is hereby **DISMISSED**.

Any request for reconsideration of this decision must be submitted within **TWO (2) MONTHS** from mail date of this decision. Extensions of time under 37 CFR 1.136(a) are permitted. The reconsideration request should include a cover letter entitled "Renewed Petition under 37 CFR 1.181." This is not a final agency decision.

This application became abandoned April 10, 2008 for failure to timely submit the entire issue fee as required by the Notice of Allowance and Issue Fee Due (Notice) mailed January 9, 2008. The Notice set a three month statutory period of time for reply. On February 8, 2008, applicants submitted the PTOL-85B along with a two page communication indicating that the issue fee had been previously paid in this application. Notice of Abandonment was mailed May 7, 2008.

The Notice indicated that the issue fee due in the instant case was $820.00. The Notice further acknowledged receipt of the previously submitted $800.00 issue fee, said fee having been submitted February 21, 2007, prior to the application being withdrawn from issue on March 13, 2007. The Notice further indicated that a total of $820.00 was due on or before April 9, 2008.

The Notice of Withdrawal From Issue mailed March 13, 2007 specifically advised applicants that the issue fee submitted February 21, 2007 in response to the first Notice of Allowance and Issue Fee Due mailed December 13, 2006 was refundable upon written request. Applicants were further advised that if the application was later found allowable, the issue fee submitted

February 21, 2007 could be applied toward payment of the issue fee in the amount identified on the new Notice of Allowance and Issue Fee Due upon written request. The Notice of Withdrawal from Issue mailed March 13, 2007 indicated that the request and any balance due must be received on or before the due date noted in the new Notice of Allowance in order to prevent abandonment of the application.

The new Notice of Allowance and Issue Fee Due mailed January 9, 2008 clearly indicated that the issue fee due was $820.00 and indicated that an $800.00 issue fee had previously been paid. Moreover, the new Notice of Allowance and Issue Fee Due mailed January 9, 2008 indicated the issue fee due indicated therein did not reflect a credit for any previously paid issue fee in this application. Applicants were further advised that if an issue fee had previously been paid in the application, the return of part b of the PTOL-85B would be considered a request to reapply the previously paid issue fee toward the issue fee now due.

The fee "now due" at the time of allowance was $820.00. Applicants submitted a PTOL-85B on February 8, 2008. Applicants crossed out the fee due ($820.00) and indicated the issue fee had been previously paid. The PTOL-85B submitted February 8, 2008 did not contain an authorization to charge any balance due to a deposit account.

Petitioners argue that the USPTO had authority to charge the balance due by virtue of the previously submitted PTOL-85B, submitted February 21, 2007.

Petitioners arguments have been carefully considered, but are not found convincing. Petitioners were advised on two separate occasions that should the application be later allowed, petitioners would be required to pay the issue fee due at that time.

Further, as provided in 37 CFR 1.311(b), an authorization to charge the issue fee (37 CFR 1.18) to a deposit account may be filed in an individual application only after the mailing of the notice of allowance. Also, 37 CFR 1.25(b) also makes clear that a general authorization made prior to the mailing of a notice of allowance does not apply to issue fees under 37 CFR 1.18.

Accordingly, applicants' prior authorization to charge fees due under 37 CFR 1.18, or, the issue fee, does not carry over to the

new Notice of Allowance and Issue Fee Due mailed January 9, 2008.

ALTERNATE VENUE

Petitioners may wish to consider filing a petition stating that the delay was unintentional. Petitioner's attention is directed to 37 CFR 1.137(b) which provides for the revival of an "unintentionally" abandoned application without a showing that the delay in prosecution or in late payment of an issue fee was "unavoidable". An "unintentional" petition under 37 CFR 1.137(b) must be accompanied by the required petition fee and reply.

The filing of a petition under 37 CFR 1.137(b) cannot be intentionally delayed and therefore must be filed promptly. A person seeking revival due to unintentional delay cannot make a statement that the delay was unintentional unless the entire delay, including the delay from the date it was discovered that the application was abandoned until the filing of the petition to revive under 37 CFR 1.137(b), was unintentional. A statement that the delay was unintentional is not appropriate if petitioner intentionally delayed the filing of a petition for revival under 37 CFR 1.137(b).

Further correspondence with respect to this matter should be addressed as follows:

By mail:	**Mail Stop Petition** Commissioner for Patents P.O. Box 1450 Alexandria, VA 22313-1450
By facsimile:	(571) 273-8300
By hand delivery:	U.S. Patent and Trademark Office Customer Window, **Mail Stop Petition** Randolph Building 401 Dulany Street Alexandria, VA 22314

Telephone inquiries concerning this matter may be directed to the undersigned at (571) 272-3205.

Alesia M. Brown
Petitions Attorney
Office of Petitions

UNITED STATES PATENT AND TRADEMARK OFFICE

Commissioner for Patents
United States Patent and Trademark Office
P.O. Box 1450
Alexandria, VA 22313-1450
www.uspto.gov

COPY MAILED

JAN 15 2009

OFFICE OF PETITIONS

ROSENBERG, KLEIN & LEE
3458 ELLICOTT CENTER DRIVE-SUITE 101
ELLICOTT CITY MD 21043

In re Application of
Mao-Jung Huang, et al.
Application No. 29/245,027
Filed: December 19, 2005
Attorney Docket No. MR1115-664

ON PETITION

This is a decision on the petition, filed October 21, 2008, under the provisions of 37 CFR 1.137(b) to revive the above-identified application.

The petition is **GRANTED**.

The application became abandoned for failure to timely pay the issue fee on or before April 9, 2008, as required by the Notice of Allowance and Fee(s) Due, mailed January 9, 2008, which set a statutory period for reply of three (3) months. A Notice of Abandonment was subsequently mailed on May 7, 2008. In response, on May 20, 2008, a petition under 37 CFR 1.181 was filed; however, the petition was dismissed in a decision mailed June 20, 2008. On October 21, 2008, the present petition was filed.

The petition satisfies the requirements of 37 CFR 1.137(b) in that petitioner has supplied (1) the reply in the form of the $860 issue fee, (2) the petition fee of $1,620, (3) an adequate statement of unintentional delay, and (4) a terminal disclaimer and fee as required by 37 CFR 1.137(d). Accordingly, the failure to timely pay the issue fee as required by the Notice of January 9, 2008 is accepted as being unintentionally delayed.

The terminal disclaimer filed October 21, 2008 is accepted and has been made of record. Any continuing application filed from this application must contain a copy of the terminal disclaimer. The copy of the terminal disclaimer must be filed with a cover letter requesting the terminal disclaimer be recorded on the continuing application. A copy of this decision should be attached to the cover letter.

The application is being referred to the Office of Data Management to be processed into a patent.

Telephone inquires related to this decision should be directed to the undersigned at (571) 272-3204. Telephone inquiries related to processing as a patent should be directed to (571) 272-4200.

Sherry D. Brinkley
Petitions Examiner
Office of Petitions

PTO/SB/27 (05-03)
Approved for use through 04/30/2003. OMB 0651-0031
U.S. Patent and Trademark Office; U.S. DEPARTMENT OF COMMERCE
Under the Paperwork Reduction Act of 1995, no persons are required to respond to a collection of information unless it displays a valid OMB control number.

REQUEST FOR EXPEDITED EXAMINATION OF A DESIGN APPLICATION (37 CFR 1.155)

Application Number	TBD
Filing Date	Herewith
First Named Inventor	D'Wayne Edwards
Title	Heel Portion of a Shoe
Atty Docket Number	015127.00624

113211 U.S.PTO
29245115
122005

HAND DELIVER TO THE DESIGN GROUP DIRECTOR'S OFFICE
-or- ADDRESS TO:
MAIL STOP EXPEDITED DESIGN
COMMISSIONER FOR PATENTS
P.O. Box 1450
Alexandria, VA 22313-1450

This is a request for expedited examination of a design application under 37 CFR 1.155.

NOTE: If the Request made by this form accompanies original application papers, include form PTO/SB/18 "Design Patent Application Transmittal" or its equivalent.

A preexamination search was conducted. The field of search was:

D2/ 902, 907, 908, 943, 944, 964, 969, 972, 973 and 974

Related applications: ____

If not previously filed for the above-identified application, the following items required by 37 CFR 1.155 are enclosed:

Formal drawings (see 37 CFR 1.84).

The fee set forth in 37 CFR 1.17(k).

An information disclosure statement in compliance with 37 CFR 1.98.

Approved
1-5-06
Jacqueline M. Stone, Director
Technology Center 1700

December 20, 2005
Date

Signature

202-824-3000
Telephone Number

Darrell G. Mottley, Reg. No. 42,912
Typed or printed name

WARNING: Information on this form may become public. Credit card information should not be included on this form. Provide credit card information and authorization on PTO-2038.

This collection of information is required by 37 CFR 1.155. The information is required to obtain or retain a benefit by the public which is to file (and by the USPTO to process) an application. Confidentiality is governed by 35 U.S.C. 122 and 37 CFR 1.14. This collection is estimated to take 6 minutes to complete, including gathering, preparing, and submitting the completed application form to the USPTO. Time will vary depending upon the individual case. Any comments on the amount of time you require to complete this form and/or suggestions for reducing this burden, should be sent to the Chief Information Officer, U.S. Patent and Trademark Office, U.S. Department of Commerce, P.O. Box 1450, Alexandria, VA 22313-1450. DO NOT SEND FEES OR COMPLETED FORMS TO THIS ADDRESS. SEND TO: Mail Stop Expedited Design, Commissioner for Patents, P.O. Box 1450, Alexandria, VA 22313-1450.

If you need assistance in completing the form, call 1-800-PTO-9199 and select option 2.

12/21/2005 JBALINAN 00000067 190733 29245115

04 FC:1802 900.00 DA

PTO/SB/27 (09-04)
Approved for use through 07/31/2006. OMB 0651-0031
U.S. Patent and Trademark Office; U.S DEPARTMENT OF COMMERCE
Under the Paperwork Reduction ACT of 1995, no persons are required to respond to collection of information unless it displays a valid OMB control number.

110000 U.S.PTO
29245132
121905

REQUEST FOR EXPEDITED EXAMINATION OF A DESIGN APPLICATION (37 CFR 1.155)

Application Number	To be assigned
Filing Date	To be assigned
First Named Inventor	Martin Lotti
Title	PORTION OF A SHOE UPPER
Attorney Docket Number	2465-7477.1US

ADDRESS TO:
MAIL STOP EXPEDITED DESIGN
COMMISSION FOR PATENTS
P.O. BOX 1450
Alexandria, VA 22313-1450

Approved 1-5-06
Jacqueline M. Stone
Jacqueline M. Stone, Director
Technology Center 1700

This is a request for expedited examination of a design application under 37 CER 1.155.

NOTE: If the Request made by this form accompanies original application papers, include form PTO/SB/18 "Design Patent Application Transmittal" or its equivalent.

A preexamination search was conducted. The field of search was:

US. CL. D2/896, D2/897, D2/902, D2/907, D2/908, D2/910 D2/911, D2/912, D2/916, D2/922, D2/935, D2/969, D2/970, D2/971, D2/972, 36/45, 36/50.1, 36/83, 36/88, 36/89, 36/93, 36/101, 36/102, 36/103, 36/104, 36/106, 36/108, 36/109, 36/113, 36/114, 36/115, 36/116, 36/126, 36/127, 36/128, 36/129, 36/130

Related applications: _____

If not previously filed for the above-identified application, the following items required by 37 CFR 1.155 are enclosed:

- Formal drawings (see 37 CFR 1.84).
- The fee set forth in 37 CFR 1.17(k).
- An information disclosure statement in compliance with 37 CFR 1.98.

Signature	19 December 2005 Date
Laurence B. Bond Typed or printed name	30,549 Registration Number, if applicable
(801) 532-1922 Telephone Number	

WARNING: Information on this form may become public. Credit card information should not be included on this form. Provide credit card information and authorization on PTO-2038.

This collection of information is required by37 CFR 1.155. The information is required to obtain or retain a benefit by the public which is to file (and by the USPTO to process) an application. Confidentiality is governed by 35 U.S.C. 122 and 37 CFR 1.11 and 1.14. This collection is estimated to take 6 minutes to complete, including gathering, preparing, and submitting the completed application form to the USPTO. Time will vary depending upon the individual case. Any comments on the amount of time you require to complete this form and/or suggestions for reducing this burden, should be sent to the Chief Information Officer, U.S. Patent and Trademark Office, U.S. Department of Commerce, P.O. Box 1450, Alexandria, VA 22313-1450. DO NOT SEND FEES OR COMPLETED FORMS TO THIS ADDRESS. SEND TO: Commissioner for Patents, P.O. Box 1450, Alexandria, VA 22343-1450.
If you need assistance *in completing the form, call 1-800-PTO-9199* and select *option 2.*

12/22/2005 LWONDIM1 00000034 201469 29245132
04 FC:1602 900.00 DA

PTO/SB/27 (09-04)
Approved for use through 07/31/2006. OMB 0651-0031
U.S. Patent and Trademark Office; U.S DEPARTMENT OF COMMERCE
Under the Paperwork Reduction ACT of 1995, no persons are required to respond to collection of information unless it displays a valid OMB control number.

13000 U.S.PTO
29/245133
121905

REQUEST FOR EXPEDITED EXAMINATION OF A DESIGN APPLICATION (37 CFR 1.155)

Application Number	To be assigned
Filing Date	To be assigned
First Named Inventor	Martin Lotti
Title	PORTION OF A SHOE UPPER
Attorney Docket Number	2465-7477US

ADDRESS TO:
MAIL STOP EXPEDITED DESIGN
COMMISSION FOR PATENTS
P.O. BOX 1450
Alexandria, VA 22313-1450

Approved 1-5-06
Jacqueline M. Stone
Jacqueline M. Stone, Director
Technology Center 1700

This is a request for expedited examination of a design application under 37 CER 1.155.

NOTE: If the Request made by this form accompanies original application papers, include form PTO/SB/18 "Design Patent Application Transmittal" or its equivalent.

A preexamination search was conducted. The field of search was:

US. CL. D2/896, D2/897, D2/902, D2/907, D2/908, D2/910 D2/911, D2/912, D2/916, D2/922, D2/935, D2/969, D2/970, D2/971, D2/972, 36/45, 36/50.1, 36/83, 36/88, 36/89, 36/93, 36/101, 36/102, 36/103, 36/104, 36/106, 36/108, 36/109, 36/113, 36/114, 36/115, 36/116, 36/126, 36/127, 36/128, 36/129, 36/130

Related applications: _____

If not previously filed for the above-identified application, the following items required by 37 CFR 1.155 are enclosed:

- Formal drawings (see 37 CFR 1.84).
- The fee set forth in 37 CFR 1.17(k).
- An information disclosure statement in compliance with 37 CFR 1.98.

Signature — 19 Dec. 2005 — Date

Laurence B. Bond — Typed or printed name

30,549 — Registration Number, if applicable

(801) 532-1922 — Telephone Number

WARNING: Information on this form may become public. Credit card information should not be included on this form. Provide credit card information and authorization on PTO-2038.

This collection of information is required by37 CFR 1.155. The information is required to obtain or retain a benefit by the public which is to file (and by the USPTO to process) an application. Confidentiality is governed by 35 U.S.C. 122 and 37 CFR 1.11 and 1.14. This collection is estimated to take 6 minutes to complete, including gathering, preparing, and submitting the completed application form to the USPTO. Time will vary depending upon the individual case. Any comments on the amount of time you require to complete this form and/or suggestions for reducing this burden, should be sent to the Chief Information Officer, U.S. Patent and Trademark Office, U.S. Department of Commerce, P.O. Box 1450, Alexandria, VA 22313-1450. DO NOT SEND FEES OR COMPLETED FORMS TO THIS ADDRESS. SEND TO: **Commissioner for Patents, P.O. Box 1450, Alexandria, VA 22343-1450.**
If you need **assistance** *in completing the form, call 1-800-PTO-9199* **and select** *option 2.*

12/22/2005 LWONDIM1 00000035 201469 29245133
04 FC:1802 900.00 DA

UNITED STATES PATENT AND TRADEMARK OFFICE

Commissioner for Patents
United States Patent and Trademark Office
P.O. Box 1450
Alexandria, VA 22313-1450
www.uspto.gov

wk

Mailed: 11-27-06

In re application of	:	
Lotti	:	DECISION ON
Serial No. 29/245,133	:	PETITION
Filed: December 19, 2005	:	
For: Portion Of A Shoe Upper	:	

This is a response to applicants request TO WITHDRAW NOTICE OF ABANDONMENT, filed November 22, 2006. The petition requests that the abandonment, as set forth in the Notice of Abandonment mailed September 22,, 2006 be withdrawn. A review of the file shows that applicant did submit the requested amended drawings on May 2, 2006 and that the May 4, 2006 Notice of Allowance requiring applicant to submit amended drawings was not proper.

DECISION

The instant request is accepted as a timely petition under 37 C.F.R. 1.181 (no fee).
The Petition is **GRANTED**.

The abandonment is withdrawn and the application will be forwarded to publications.

Jacqueline Stone, Director
Technology Center 2900
Designs

Laurence B. Bond
TRASK BRITT
P.O. Box 2550
Salt Lake City, UT 84110

PTO/SB/27 (09-04)
Approved for use through 07/31/2006. OMB 0651-0031
U.S. Patent and Trademark Office: U.S DEPARTMENT OF COMMERCE
Under the Paperwork Reduction ACT of 1995, no persons are required to respond to collection of information unless it displays a valid OMB control number.

113000 U.S. PTO
29/245134
121905

REQUEST FOR EXPEDITED EXAMINATION OF A DESIGN APPLICATION (37 CFR 1.155)

Application Number	To be assigned
Filing Date	To be assigned
First Named Inventor	Tae Yong Lee
Title	PORTION OF A SHOE UPPER
Attorney Docket Number	2465-7468US

ADDRESS TO:
MAIL STOP EXPEDITED DESIGN
COMMISSION FOR PATENTS
P.O. BOX 1450
Alexandria, VA 22313-1450

Approved 1-5-06
Jacqueline M. Stone
Jacqueline M. Stone, Director
Technology Center 1700

This is a request for expedited examination of a design application under 37 CER 1.155.

NOTE: If the Request made by this form accompanies original application papers, include form PTO/SB/18 "Design Patent Application Transmittal" or its equivalent.

A preexamination search was conducted. The field of search was:

US. CL. D2/896, D2/897, D2/902, D2/907, D2/908, D2/910 D2/911, D2/912, D2/916, D2/922, D2/935, D2/969, D2/970, D2/971, D2/972, 36/45, 36/50.1, 36/83, 36/88, 36/89, 36/93, 36/101, 36/102, 36/103, 36/104, 36/106, 36/108, 36/109, 36/113, 36/114, 36/115, 36/116, 36/126, 36/127, 36/128, 36/129, 36/130

Related applications: _____

If not previously filed for the above-identified application, the following items required by 37 CFR 1.155 are enclosed:

- Formal drawings (see 37 CFR 1.84).
- The fee set forth in 37 CFR 1.17(k).
- An information disclosure statement in compliance with 37 CFR 1.98.

Signature	19 Dec. 2005 Date
Laurence B. Bond Typed or printed name	30,549 Registration Number, if applicable
(801) 532-1922 Telephone Number	

WARNING: Information on this form may become public. Credit card information should not be included on this form. Provide credit card information and authorization on PTO-2038.

This collection of information is required by37 CFR 1.155. The information is required to obtain or retain a benefit by the public which is to file (and by the USPTO to process) an application. Confidentiality is governed by 35 U.S.C. 122 and 37 CFR 1.11 and 1.14. This collection is estimated to take 6 minutes to complete, including gathering, preparing, and submitting the completed application form to the USPTO. Time will vary depending upon the individual case. Any comments on the amount of time you require to complete this form and/or suggestions for reducing this burden, should be sent to the Chief Information Officer, U.S. Patent and Trademark Office, U.S. Department of Commerce, P.O. Box 1450, Alexandria, VA 22313-1450. DO NOT SEND FEES OR COMPLETED FORMS TO THIS ADDRESS. SEND TO: Commissioner for Patents, P.O. Box 1450, Alexandria, VA 22343-1450.

If you need **assistance** *in completing the form, call 1-800-PTO-9199* **and select** *option 2.*

12/22/2005 LWONDIM1 00000033 201469 29245134

04 FC:1802 900.00 DA

MAR 14 2006
PATENT & TRADEMARK OFFICE

PTO/SB/27 (09-04)
Approved for use through 07/31/2006. OMB 0651-0031
U.S. Patent and Trademark Office; U.S DEPARTMENT OF COMMERCE
Under the Paperwork Reduction ACT of 1995, no persons are required to respond to collection of information unless it displays a valid OMB control number.

REQUEST FOR EXPEDITED EXAMINATION OF A DESIGN APPLICATION (37 CFR 1.155)

Application Number	29/245,191
Filing Date	December 21, 2005
First Named Inventor	Arni Thor Ingimundarson et al.
Title	Knee Brace
Atty Docket Number	INGI3016/JEK/JJC

ADDRESS TO:
MAIL STOP EXPEDITED DESIGN
COMMISSIONER FOR PATENTS
P.O. Box 1450
Alexandria, VA 22313-1450

Approved 4-6-06
Jacqueline M. Stone
Jacqueline M. Stone, Director
Technology Center 1700

This is a request for expedited examination of a design application under 37 CFR 1.155.

NOTE: If the Request made by this form accompanies original application papers, include form PTO/SB/18 "Design Patent Application Transmittal" or its equivalent.

A preexamination search was conducted. The field of search was:

602/16, 602/26, 602/59, D24/190

Related applications: 11/312,416; 11/312,330; 11/312,331; 11/312,514; 11/312,337; 29/254,809

If not previously filed for the above-identified application, the following items required by 37 CFR 1.155 are enclosed:

- Formal drawings (see 37 CFR 1.84).
- The fee set forth in 37 CFR 1.17(k).
- An information disclosure statement in compliance with 37 CFR 1.98.

Signature

03/15/2006 SZEWDIE1 00000040 29245191
01 FC:1820 MARCH 2006 900.00 OP

Date

JUSTIN J. CASSELL
Typed or printed name

46,205
Registration Number, if applicable

(703)683-0500
Telephone Number

WARNING: Information on this form may become public. Credit card information should not be included on this form. Provide credit card information and authorization on PTO-2038.

This collection of information is required by 37 CFR 1.155. The information is required to obtain or retain a benefit by the public which is to file (and by the USPTO to process) an application. Confidentiality is governed by 35 U.S.C. 122 and 37 CFR 1.11 and 1.14. This collection is estimated to take 6 minutes to complete, including gathering, preparing, and submitting the completed application form to the USPTO. Time will vary depending upon the individual case. Any comments on the amount of time you require to complete this form and/or suggestions for reducing this burden, should be sent to the Chief Information Officer, U.S. Patent and Trademark Office, U.S. Department of Commerce, P.O. Box 1450, Alexandria, VA 22313-1450. DO NOT SEND FEES OR COMPLETED FORMS TO THIS ADDRESS. SEND TO: Commissioner for Patents, P.O. Box 1450, Alexandria, VA 22313-1450.

If you need assistance in completing the form, call 1-800-PTO-9199 and select option 2.

PTO/SB/27 (05-03)
Approved for use through 04/30/2003. OMB 0651-0031
U.S. Patent and Trademark Office; U.S. DEPARTMENT OF COMMERCE
Under the Paperwork Reduction Act of 1995, no persons are required to respond to a collection of information unless it displays a valid OMB control number.

REQUEST FOR EXPEDITED EXAMINATION OF A DESIGN APPLICATION (37 CFR 1.155)

Application Number	TBD
Filing Date	Herewith
First Named Inventor	D'Wayne Edwards
Title	PORTION OF A SHOE SOLE
Atty Docket Number	015127.00625

113000 U.S. PTO
29/245199
122105

HAND DELIVER TO THE DESIGN GROUP DIRECTOR'S OFFICE
-or- ADDRESS TO:
MAIL STOP EXPEDITED DESIGN
COMMISSIONER FOR PATENTS
P.O. Box 1450
Alexandria, VA 22313-1450

This is a request for expedited examination of a design application under 37 CFR 1.155.

NOTE: If the Request made by this form accompanies original application papers, include form PTO/SB/18 "Design Patent Application Transmittal" or its equivalent.

A preexamination search was conducted. The field of search was:

D2/ 947, 948, 949, 951, 952, 953, 954, 955, 956, 960 and 967

Related applications: 015127.00626

If not previously filed for the above-identified application, the following items required by 37 CFR 1.155 are enclosed:

Formal drawings (see 37 CFR 1.84).

The fee set forth in 37 CFR 1.17(k).

An information disclosure statement in compliance with 37 CFR 1.98.

Approved 1-5-06
Jacqueline M. Stone, Director
Technology Center 1700

December 21, 2005
Date

Signature

202-824-3000
Telephone Number

Darrell G. Mottley, Reg. No. 42,912
Typed or printed name

WARNING: Information on this form may become public. Credit card information should not be included on this form. Provide credit card information and authorization on PTO-2038.

This collection of information is required by 37 CFR 1.155. The information is required to obtain or retain a benefit by the public which is to file (and by the USPTO to process) an application. Confidentiality is governed by 35 U.S.C. 122 and 37 CFR 1.14. This collection is estimated to take 6 minutes to complete, including gathering, preparing, and submitting the completed application form to the USPTO. Time will vary depending upon the individual case. Any comments on the amount of time you require to complete this form and/or suggestions for reducing this burden, should be sent to the Chief Information Officer, U.S. Patent and Trademark Office, U.S. Department of Commerce, P.O. Box 1450, Alexandria, VA 22313-1450. DO NOT SEND FEES OR COMPLETED FORMS TO THIS ADDRESS. SEND TO: Mail Stop Expedited Design, Commissioner for Patents, P.O. Box 1450, Alexandria, VA 22313-1450.

If you need assistance in completing the form, call 1-800-PTO-9199 and select option 2.

12/22/2005 SSITHIB1 00000037 29245199
04 FC:1802 900.00 DA

PTO/SB/27 (05-03)
Approved for use through 04/30/2003. OMB 0651-0031
U.S. Patent and Trademark Office; U.S. DEPARTMENT OF COMMERCE
Under the Paperwork Reduction Act of 1995, no persons are required to respond to a collection of information unless it displays a valid OMB control number.

REQUEST FOR EXPEDITED EXAMINATION OF A DESIGN APPLICATION (37 CFR 1.155)

Application Number	TBD
Filing Date	Herewith
First Named Inventor	D'Wayne Edwards
Title	PORTION OF A SHOE SOLE
Atty Docket Number	015127.00628

113000 U.S. PTO 29/245200 122105

HAND DELIVER TO THE DESIGN GROUP DIRECTOR'S OFFICE
-or- ADDRESS TO:
MAIL STOP EXPEDITED DESIGN
COMMISSIONER FOR PATENTS
P.O. Box 1450
Alexandria, VA 22313-1450

This is a request for expedited examination of a design application under 37 CFR 1.155.

NOTE: If the Request made by this form accompanies original application papers, include form PTO/SB/18 "Design Patent Application Transmittal" or its equivalent.

A preexamination search was conducted. The field of search was:

D2/ 947, 948, 949, 951, 952, 953, 954, 955, 956, 960 and 967

Related applications: 015127.00625

If not previously filed for the above-identified application, the following items required by 37 CFR 1.155 are enclosed:

Formal drawings (see 37 CFR 1.84).

The fee set forth in 37 CFR 1.17(k).

An information disclosure statement in compliance with 37 CFR 1.98.

1-5-06
Approved
Jacqueline M. Stone
Jacqueline M. Stone, Director
Technology Center 1700

December 21, 2005
Date

Signature

202-824-3000
Telephone Number

Darrell G. Mottley, Reg. No. 42,912
Typed or printed name

WARNING: Information on this form may become public. Credit card information should not be included on this form. Provide credit card information and authorization on PTO-2038.

12/22/2005 SSITHIB1 00000038 290733 29245200
01 FC:1802 900.00 DA

This collection of information is required by 37 CFR 1.155. The information is required to obtain or retain a benefit by the public which is to file (and by the USPTO to process) an application. Confidentiality is governed by 35 U.S.C. 122 and 37 CFR 1.14. This collection is estimated to take 6 minutes to complete, including gathering, preparing, and submitting the completed application form to the USPTO. Time will vary depending upon the individual case. Any comments on the amount of time you require to complete this form and/or suggestions for reducing this burden, should be sent to the Chief Information Officer, U.S. Patent and Trademark Office, U.S. Department of Commerce, P.O. Box 1450, Alexandria, VA 22313-1450. DO NOT SEND FEES OR COMPLETED FORMS TO THIS ADDRESS. SEND TO: Mail Stop Expedited Design, Commissioner for Patents, P.O. Box 1450, Alexandria, VA 22313-1450.

If you need assistance in completing the form, call 1-800-PTO-9199 and select option 2.

PTO/SB/27 (05-03)
Approved for use through 04/30/2003. OMB 0651-0031
U.S. Patent and Trademark Office; U.S. DEPARTMENT OF COMMERCE
Under the Paperwork Reduction Act of 1995, no persons are required to respond to a collection of information unless it displays a valid OMB control number.

REQUEST FOR EXPEDITED EXAMINATION OF A DESIGN APPLICATION (37 CFR 1.155)

Application Number	TBD
Filing Date	Herewith
First Named Inventor	D'Wayne Edwards
Title	PORTION OF A SHOE UPPER
Atty Docket Number	015127.00823

113000 U.S PTO
29/245201
122105

HAND DELIVER TO THE DESIGN GROUP DIRECTOR'S OFFICE
-or- ADDRESS TO:
MAIL STOP EXPEDITED DESIGN
COMMISSIONER FOR PATENTS
P.O. Box 1450
Alexandria, VA 22313-1450

This is a request for expedited examination of a design application under 37 CFR 1.155.

NOTE: If the Request made by this form accompanies original application papers, include form PTO/SB/18 "Design Patent Application Transmittal" or its equivalent.

A preexamination search was conducted. The field of search was:

D2/ 902, 907, 908, 943, 944, 969, 972, 973 and 974

Related applications: 015127.00620

If not previously filed for the above-identified application, the following items required by 37 CFR 1.155 are enclosed:

Formal drawings (see 37 CFR 1.84).

The fee set forth in 37 CFR 1.17(k).

An information disclosure statement in compliance with 37 CFR 1.98.

Approved 1-5-06
Jacqueline M. Stone
Jacqueline M. Stone, Director
Technology Center 1700

December 21, 2005
Date

Darrell G Mottley
Signature

202-824-3000
Telephone Number

Darrell G. Mottley, Reg. No. 42,912
Typed or printed name

WARNING: Information on this form may become public. Credit card information should not be included on this form. Provide credit card information and authorization on PTO-2038.

This collection of information is required by 37 CFR 1.155. The information is required to obtain or retain a benefit by the public which is to file (and by the USPTO to process) an application. Confidentiality is governed by 35 U.S.C. 122 and 37 CFR 1.14. This collection is estimated to take 6 minutes to complete, including gathering, preparing, and submitting the completed application form to the USPTO. Time will vary depending upon the individual case. Any comments on the amount of time you require to complete this form and/or suggestions for reducing this burden, should be sent to the Chief Information Officer, U.S. Patent and Trademark Office, U.S. Department of Commerce, P.O. Box 1450, Alexandria, VA 22313-1450. DO NOT SEND FEES OR COMPLETED FORMS TO THIS ADDRESS. SEND TO: Mail Stop Expedited Design, Commissioner for Patents, P.O. Box 1450, Alexandria, VA 22313-1450.

If you need assistance in completing the form, call 1-800-PTO-9199 and select option 2.

12/22/2005 SSITHIB1 00000039 180232 29245201
01 FC:1802 900.00 DA

PTO/SB/27 (05-03)
Approved for use through 04/30/2003. OMB 0651-0031
U.S. Patent and Trademark Office; U.S. DEPARTMENT OF COMMERCE
Under the Paperwork Reduction Act of 1995, no persons are required to respond to a collection of information unless it displays a valid OMB control number.

REQUEST FOR EXPEDITED EXAMINATION OF A DESIGN APPLICATION (37 CFR 1.155)

Application Number	TBD
Filing Date	Herewith
First Named Inventor	D'Wayne Edwards
Title	PORTION OF A SHOE UPPER
Atty Docket Number	015127.00620

U.S.PTO
12/29/2005
13000
122105

HAND DELIVER TO THE DESIGN GROUP DIRECTOR'S OFFICE
-or- ADDRESS TO:
MAIL STOP EXPEDITED DESIGN
COMMISSIONER FOR PATENTS
P.O. Box 1450
Alexandria, VA 22313-1450

This is a request for expedited examination of a design application under 37 CFR 1.155.

NOTE: If the Request made by this form accompanies original application papers, include form PTO/SB/18 "Design Patent Application Transmittal" or its equivalent.

A preexamination search was conducted. The field of search was:

D2/ 902, 907, 908, 943, 944, 969, 972, 973 and 974

Approved 1-5-06
Jacqueline M. Stone
Jacqueline M. Stone, Director
Technology Center 1700

Related applications: 015127.00623

If not previously filed for the above-identified application, the following items required by 37 CFR 1.155 are enclosed:

Formal drawings (see 37 CFR 1.84).

The fee set forth in 37 CFR 1.17(k).

An information disclosure statement in compliance with 37 CFR 1.98.

December 21, 2005
Date

Signature

202-824-3000
Telephone Number

Darrell G. Mottley, Reg. No. 42,912
Typed or printed name

WARNING: Information on this form may become public. Credit card information should not be included on this form. Provide credit card information and authorization on PTO-2038.

This collection of information is required by 37 CFR 1.155. The information is required to obtain or retain a benefit by the public which is to file (and by the USPTO to process) an application. Confidentiality is governed by 35 U.S.C. 122 and 37 CFR 1.14. This collection is estimated to take 6 minutes to complete, including gathering, preparing, and submitting the completed application form to the USPTO. Time will vary depending upon the individual case. Any comments on the amount of time you require to complete this form and/or suggestions for reducing this burden, should be sent to the Chief Information Officer, U.S. Patent and Trademark Office, U.S. Department of Commerce, P.O. Box 1450, Alexandria, VA 22313-1450. DO NOT SEND FEES OR COMPLETED FORMS TO THIS ADDRESS. SEND TO: Mail Stop Expedited Design, Commissioner for Patents, P.O. Box 1450, Alexandria, VA 22313-1450.

If you need assistance in completing the form, call 1-800-PTO-9199 and select option 2.

12/22/2005 SSITHIB1 00000040 190733 29245202
01 FC:1802 900.00 DA

UNITED STATES PATENT AND TRADEMARK OFFICE

Commissioner for Patents
United States Patent and Trademark Office
P.O. Box 1450
Alexandria, VA 22313-1450
www.uspto.gov

Applica Consumer Products, Inc
Suite 104
35 Thorpe Avenue
Wallingford CT 06492

COPY MAILED

JUN 0 1 2006

OFFICE OF PETITIONS

In re Application of :
Reyes, et al. :
Application No.: 29/245,214 :
Filed: December 20, 2005 :
Attorney Docket No.: 074104.1371 :
For: BASE FOR BLENDER

DECISION REFUSING STATUS
UNDER 37 CFR 1.47(a)

This is a decision on the petition under 37 CFR 1.47(a), filed April 11, 2006.

The petition is **DISMISSED**.

Any request for reconsideration of this decision must be submitted within TWO (2) MONTHS from the mail date of this decision. Extensions of time under 37 CFR 1.136(a) are permitted. Any response should be entitled "Request for Reconsideration of Petition Under 37 CFR 1.47(a)" and may include an oath or declaration executed by the inventor. **Failure to respond will result in abandonment of the application.**

The above-identified application was filed on December 20, 2005 without an executed oath or declaration. Accordingly, on January 11, 2006, a "Notice to File Missing Parts of Nonprovisional Application" was mailed, requiring an executed oath or declaration and a surcharge for its late filing.

In response, on April 11, 2006, a petition for a one month extension of time and required fee, a declaration executed by 3 of 4 joint inventors, the surcharge, the petition fee, and the instant petition were filed. A declaration of facts of Lisa R. Carstarphen, Vice President, General Counsel & Corporate Secretary of Applica Consumer Product, Inc., accompanied the petition. Ms. Carstarphen explains that a copy of the application, a declaration and power of attorney and assignment document was forwarded to non-signing inventor Ruben Ortiz Maldonado's last known address, but Mr. Maldanado has not returned signed documents.

A grantable petition under 37 CFR 1.47(a) requires:

(1) a petition including proof of the pertinent facts establishing that the joint inventor(s) refuses to join, or cannot be found or reached after diligent effort,

(2) a proper oath or Declaration executed by the available joint inventor(s),
(3) the fee of $200, and
(4) the last known address of the omitted inventor(s).

This petition lacks item (1).

As to item (1), applicants have failed to establish that Mr. Maldonado has refused to sign the declaration or cannot be reached.

Petitioners have not specified whether Mr. Maldonado has refused to join or he cannot be located. A successful Rule 47 petition requires either (1) a clear refusal to join, whether expressly or by conduct, or (2) a showing of diligence in trying to find an unavailable inventor. The proof of the pertinent events should be made by a statement of someone with first hand knowledge of the events.

If petitioners are alleging Mr. Maldonado has refused to join, several issues are unresolved. Petitioners have not stated whether or not the March 23, 2006 package was returned to sender. In addition, it is noted that the March 23, 2006 package was mailed to Mexico from the United States. The undersigned is concerned that Mr. Maldonado did not have sufficient time to review the application and return executed documents by April 11, 2006. Mr. Maldonado could have been on vacation during the short time period. The Office must be assured that Mr. Maldonado received the package and had sufficient time to review the application and return executed documents.

Any written refusal should be included as documentary evidence in the reconsideration petition. If there is an oral refusal, the facts surrounding the refusal should be included in a declaration by a party with first hand knowledge of the refusal. If it is concluded by the 37 CFR 1.47 applicant that a non-signing inventor's conduct constitutes a refusal, all facts upon which that conclusion is based should be stated in an affidavit or declaration.

If petitioners are alleging that Mr. Maldonado cannot be located, other attempts to reach Mr. Maldonado are required. A showing of **diligence** is critical in obtaining Rule 47 status when an inventor cannot be located or reached. If the March 23, 2006 package was returned, and other efforts to locate the inventor, e.g. through e-mail or computer searches (such as LEXIS) are fruitless, then applicants will have established that the inventor cannot be reached.

Documentary evidence to support facts alleged in the affidavit or declaration should be submitted.

Further correspondence with respect to this matter should be addressed as follows:

By mail:

Mail Stop PETITION
Commissioner for Patents
Post Office Box 1450
Alexandria, VA 22313-1450

By hand: U.S. Patent and Trademark Office
Customer Service Window, Mail Stop Petition
Randolph Building
401 Dulany Street
Alexandria, VA 22314

By FAX: (571) 273-8300 - ATTN: Office of Petitions

Telephone inquiries should be directed to the undersigned at (571) 272-3230.

E. Shirene Willis
Senior Petitions Attorney
Office of Petitions

cc: BAKER BOTTS L.L.P.
PATENT DEPARTMENT
98 SAN JACINTO BLVD., SUITE 1500
AUSTIN, TX 78701-4039

UNITED STATES PATENT AND TRADEMARK OFFICE

Commissioner for Patents
United States Patent and Trademark Office
P.O. Box 1450
Alexandria, VA 22313-1450
www.uspto.gov

BAKER BOTTS L.L.P.
PATENT DEPARTMENT
98 SAN JACINTO BLVD., SUITE 1500
AUSTIN TX 78701-4039

COPY MAILED
OCT 13 2006
OFFICE OF PETITIONS

In re Application of	:	
Reyes, et al.	:	DECISION NOTING JOINDER
Application No.: 29/245,214	:	OF INVENTOR AND PETITION
Filed: December 20, 2005	:	UNDER 37 CFR 1.47(a)
Attorney Docket No.: 074104.1371	:	DISMISSED AS MOOT
For: BASE FOR BLENDER		

Papers filed on August 7, 2006 in reply to "Decision Refusing Status Under 37 CFR 1.47(a)" mailed on June 1, 2006, included a Declaration signed by the previously nonsigning inventor, Ruben Ortiz Maldonado, in compliance with 37 CFR 1.63.

In view of the joinder of the inventor, further consideration under 37 CFR 1.47(a) is moot; this application does not have any rule 1.47(a) status and no such status should appear on the file wrapper. This application need not be returned to this office for any further consideration under 37 CFR 1.47(a).

After the mailing of this decision, the application will be returned to Technology Center A.U. 2913 to await applicants' reply to the October 2, 2006 Office action.

Telephone inquiries should be directed to the undersigned at (571) 272-3230.

Shirene Willis Brantley

Shirene Willis Brantley
Senior Petitions Attorney
Office of Petitions

SPE RESPONSE FOR CERTIFICATE OF CORRECTION

Paper No.:20080805

DATE : July 09, 2008

TO SPE OF : ART UNIT 2912

SUBJECT : Request for Certificate of Correction on Patent No.: D547,161

A response is requested with respect to the accompanying request for a certificate of correction.

Please complete this form and return with file, within **7** days to:
Certificates of Correction Branch - ST (South Tower) 9A22
Palm location **7590** - Tel. No. (703) 305-8309

With respect to the change(s) requested, correcting Office and/or Applicant's errors, should the patent read as shown in the certificate of correction? No new matter should be introduced, nor should the scope or meaning of the claims be changed.

Thank You For Your Assistance **Certificates of Correction Branch**

The request for issuing the above-identified correction(s) is hereby:

Note your decision on the appropriated box.

☒ **Approved** All changes apply.

☐ **Approved in Part** Specify below which changes **do not** apply.

☐ **Denied** State the reasons for denial below.

Comments:

SPE: /Caron D. Veynar/ Art Unit 2913

UNITED STATES PATENT AND TRADEMARK OFFICE

Commissioner for Patents
United States Patent and Trademark Office
P.O. Box 1450
Alexandria, VA 22313-1450
www.uspto.gov

THE PROCTER & GAMBLE COMPANY
INTELLECTUAL PROPERTY DIVISION - WEST BLDG.
WINTON HILL BUSINESS CENTER - BOX 412
6250 CENTER HILL AVENUE
CINCINNATI OH 45224

COPY MAILED

NOV 2 7 2007

OFFICE OF PETITIONS

In re Application of :
Murphy G. Mongeon et al. :
Application No. 29/245,276 : ON PETITION
Filed: December 21, 2005 :
Attorney Docket No. D-1058 :

This is a decision on the petition under 37 CFR 1.137(b), filed October 4, 2007, to revive the above-identified application.

The petition is **GRANTED**.

The above-identified application became abandoned for failure to submit corrected drawings in a timely manner in reply to the Notice of Allowance mailed May 29, 2007, which set a statutory period for reply of three (3) months. Accordingly, by operation of law, the above-identified application became abandoned on August 30, 2007.

The petition satisfies the conditions for revival pursuant to the provisions of 37 CFR 1.137(b) in that (1) the reply in the form of corrected formal drawings; (2) the petition fee of $1,540; (3) the required statement of unintentional delay; and (4) a terminal disclaimer and fee as required by 37 CFR 1.137(d) have been received. Accordingly, the drawings are accepted as having been unintentionally delayed.

The terminal disclaimer is accepted and has been made of record.

Telephone inquiries concerning this decision should be directed to Carl Friedman at (571) 272-6842.

The application file is being referred to the Office of Patent Publication.

David Bucci
Petitions Examiner
Office of Petitions

UNITED STATES PATENT AND TRADEMARK OFFICE

Commissioner for Patents
United States Patent and Trademark Office
P.O. Box 1450
Alexandria, VA 22313-1450
www.uspto.gov

HOVEY WILLIAMS LLP
SUITE 400
2406 GRAND BOULEVARD
KANSAS CITY, MO 64108

COPY MAILED

OCT 29 2007

OFFICE OF PETITIONS

In re Application of	:	
W. Cary Dikeman et al	:	DECISION GRANTING PETITION
Application No. 29/245,311	:	UNDER 37 CFR 1.313(c)(3) (CPA)
Filed: December 21, 2005	:	
Attorney Docket No. 36295-DSG	:	

This is a decision on the petition under 37 CFR 1.313(c)(3), filed October 24, 2007, to withdraw the above-identified application from issue after payment of the issue fee.

The petition is **GRANTED**.

The above-identified application is hereby withdrawn from issue in favor of a continued prosecution application (CPA) under 37 CFR 1.53(d).

Petitioner is advised that the issue fee paid on September 5, 2007 in the parent application is not refundable nor can it be applied towards any new Notice of Allowance and Fee(s) Due which may issue on the CPA filed October 24, 2007.

Telephone inquiries should be directed to the undersigned at (571) 272-3218.

This matter is being referred to Technology Center AU 2914 for processing of the CPA and consideration of the concurrently filed Information Disclosure Statement.

Frances Hicks
Petitions Examiner
Office of Petitions

UNITED STATES PATENT AND TRADEMARK OFFICE

Commissioner for Patents
United States Patent and Trademark Office
P.O. Box 1450
Alexandria, VA 22313-1450
www.uspto.gov

WOLFF & SAMSON PC
ONE BOLAND DR
WEST ORANGE NJ 07052

COPY MAILED

APR 11 2006

OFFICE OF PETITIONS

In re Application of :
Menchini, et al. :
Application No. 29/245,327 : DECISION ON PETITION
Filed: December 21, 2005 :
Attorney Docket No. 11596-21 :

This is a decision on the "PETITION UNDER 37 C.F.R. 1.182 FOR GRANTING OF FILING DATE", filed February 21, 2006, requesting that the above-identified application be accorded a filing date of December 21, 2005.

The instant application was deposited on December 21, 2005, claiming the benefit of priority to Swiss application 132018. However, the instant application omitted a copy of the specification. Accordingly, on January 30, 2006, the Office of Initial Patent Examination properly mailed a "Notice of Incomplete Nonprovisional Application", requiring drawings and stating that the filing date would be the date of receipt of the drawings. The Notice also required an executed oath or declaration.

In response, applicants filed the present petition on February 21, 2006, together with a an executed declaration. Petitioners point out that they incorporated Swiss application 132018 via a priority claim pursuant to 37 CFR 1.57(a).

With respect to the practice of incorporation by reference, the Manual of Patent Examining Procedure states:

> Material needed to accord an application a filing date may not be incorporated by reference. Therefore, if a continuation or divisional application as originally filed incorporates by reference material omitted from the application papers, which is needed to accord the application a filing date, the application will not be entitled to a filing date. A petition under 37 CFR 1.182 and the required petition fee, including an amendment submitting the necessary omitted material, requesting that the necessary omitted material contained in the prior application and submitted in the amendment, be included in the continuation or divisional application based upon the incorporation by reference statement, is required in order to accord the application a filing date as of the date of deposit of the continuation or divisional application. An amendment submitting the omitted material and relying upon the incorporation by reference will not be entered in the continuation or divisional application unless a decision granting the petition states that the application is accorded a filing date and that the amendment will be entered.[1]

Incorporation by reference is intended as a safeguard to protect an applicant who in a continuation or divisional application has omitted a "portion" of the application on filing.[2] Here, applicants omitted the specification in its entirety. However, petitioners incorporated Swiss application 132018 via a priority claim pursuant to 37 CFR 1.57(a). In addition, petitioners submitted the omitted specification, and the $400 petition fee. While petitioners did not submit an amendment seeking the specification's entry, the petition will be construed as such.

In view thereof, the petition is **GRANTED**.

The application is being forwarded to the Office of Initial Patent Examination (OIPE) for further processing with a **filing date of December 21, 2005**, using the application papers received in the Office on that date and the two (2) pages of specification supplied on petition filed February 21, 2006. Applicants will receive appropriate notifications regarding the fees owed, if any, and other information in due course from OIPE.

Telephone inquiries specific to this decision should be directed to the undersigned at 571-272-3207.

Cliff Congo
Petitions Attorney
Office of Petitions

---

[1] MPEP 201.06(c) (emphasis added).

[2] See id.

UNITED STATES PATENT AND TRADEMARK OFFICE

COMMISSIONER FOR PATENTS
UNITED STATES PATENT AND TRADEMARK OFFICE
P.O. BOX 1450
ALEXANDRIA, VA 22313-1450
www.uspto.gov

CHRISTOPHER JOSEPH SECHE
11 MAIN ST
KINGSTON, NY 12401

COPY MAILED

JUN 15 2007

OFFICE OF PETITIONS

In re Application of :
Christopher J. Seche :
Application No. 29/245,328 : ON PETITION
Filed: December 21, 2005 :
Attorney Docket No. None :

This is a decision on the petition, filed November 1, 2006, to revive the above-identified application under 37 CFR 1.137(b).

The petition is **DISMISSED**.

A grantable petition under 37 CFR 1.137(b)[1] must be accompanied by: (1) the required reply,[2] unless previously filed; (2) the petition fee as set forth in 37 CFR 1.17(m); (3) a statement that the entire delay in filing the required reply from the due date for the reply until the filing of a grantable petition pursuant to 37 CFR 1.137(b) was unintentional; and (4) any terminal disclaimer (and fee as set forth in 37 CFR 1.20(d)) required by 37 CFR 1.137(c). Where there is a question as to whether either the abandonment or the delay in filing a petition under 37 CFR 1.137 was unintentional, the Commissioner may require additional information. See MPEP 711.03(c)(III)(C) and (D).

The petition lacks items (4) above. Petitioner submitted the issue fee, the petition fee, an acceptable statement of unintentional delay and an unexecuted terminal disclaimer, including the requisite fee. To be effective, the terminal disclaimer must be signed in accordance with 37 CFR 1.33(b) which states:

Amendments and other papers filed in the application must be signed by:

(1) An attorney or agent of record appointed in compliance with §1.34(b);

---

[1] As amended effective December 1, 1997. See Changes to Patent Practice and Procedure; Final Rule Notice, 62 Fed. Reg. 53131, 53194-95 (October 10, 1997), 1203 Off. Gaz. Pat. Office 63, 119-20 (October 21, 1997).

[2] In a nonprovisional application abandoned for failure to prosecute, the required reply may be met by the filing of a continuing application. In an application or patent, abandoned or lapsed for failure to pay the issue fee or any portion thereof, the required reply must be the payment of the issue fee or any outstanding balance thereof.

(2) A registered attorney or agent not of record who acts in a representative capacity under the provisions of §1.34(a);
(3) The assignee of record of the entire interest, if there is an assignee of record of the entire interest;
(4) An assignee of record of an undivided part interest, and any assignee(s) of the remaining interest and any applicant retaining an interest, if there is an assignee of record of an undivided part interest; or
(5) All of the applicants (§§ 1.42. 1.43 and 1.47) for patent, unless there is an assignee of record of the entire interest and such assignee has taken action in the application in accordance with §§ 3.71 and 3.73.

Any request for reconsideration of this decision must be submitted within TWO (2) MONTHS from the mail date of this decision. Extensions of time under 37 CFR 1.136(a) are permitted. The reconsideration request should include a cover letter entitled "Renewed Petition under 37 CFR 1.137(b)." This is **not** a final agency action within the meaning of 5 U.S.C. § 704.

Further correspondence with respect to this matter should be addressed as follows:

By mail:
Mail Stop PETITION
Commissioner for Patents
Post Office Box 1450
Alexandria, VA 22313-1450

By hand:
U.S. Patent and Trademark Office
Customer Service Window, Mail Stop PETITION
Randolph Building
401 Dulany Street
Alexandria, VA 22314

The centralized facsimile number is **(571) 273-8300**.

Any questions concerning this matter may be directed to the undersigned at (571) 272-3204.

Sherry D. Brinkley
Petitions Examiner
Office of Petitions

UNITED STATES PATENT AND TRADEMARK OFFICE

Commissioner for Patents
United States Patent and Trademark Office
P.O. Box 1450
Alexandria, VA 22313-1450
www.uspto.gov

CHRISTOPHER JOSEPH SECHE
11 MAIN ST
KINGSTON, NY 12401

COPY MAILED

FEB 27 2008

OFFICE OF PETITIONS

In re Application of
Christopher J. Seche
Application No. 29/245,328
Filed: December 21, 2005
Attorney Docket No. None

ON PETITION

This is a decision on the renewed petition under 37 CFR 1.137(b), filed June 27, 2007, to revive the above-identified design application.

The petition is **GRANTED**.

The application became abandoned for failure to timely pay the issue fee on or before June 5, 2006, as required by the Notice of Allowance and Fee(s) Due, mailed March 3, 2006, which set a statutory period for reply of three (3) months. A Notice of Abandonment was mailed on August 1, 2006. In response, on November 1, 2006, a petition under 37 CFR 1.137(b) was filed; however, the petition was dismissed in a decision mailed June 15, 2007. On June 27, 2007, the present petition was filed.

The petition now satisfies the requirements of 37 CFR 1.137(b) in that petitioner has supplied (1) the reply in the form of the $400 issue fee, (2) the petition fee of $750, (3) a proper statement of unintentional delay, and (4) a terminal disclaimer and fee as required by 37 CFR 1.137(d). Accordingly, the failure to timely pay the issue fee as required by the Notice of March 3, 2006 is accepted as being unintentionally delayed.

The terminal disclaimer filed June 27, 2007 is accepted and has been made of record. Any continuing application filed from this application must contain a copy of the terminal disclaimer. The copy of the terminal disclaimer must be filed with a cover letter requesting the terminal disclaimer be recorded on the continuing application. A copy of this decision should be attached to the cover letter.

The application is being referred to the Office of Data Management to be processed into a patent.

Telephone inquires related to this decision should be directed to the undersigned at (571) 272-3204. Telephone inquiries related to processing as a patent should be directed to (571) 272-4200.

Sherry D. Brinkley
Petitions Examiner
Office of Petitions

UNITED STATES PATENT AND TRADEMARK OFFICE

Commissioner for Patents
United States Patent and Trademark Office
P.O. Box 1450
Alexandria, VA 22313-1450
www.uspto.gov

PATRICK J. WALSH, ESQ.
400 MAIN STREET
STAMFORD, CT 06901

COPY MAILED

MAY 0 4 2007

OFFICE OF PETITIONS

In re Application of :
Franzino, Joseph J. :
Application No. 29/245,339 : ON PETITION
Filed: December 21, 2005 :
Title: TUBE CLEANING MACHINE :

This is a decision on the petition under 37 C.F.R. § 1.137(b), filed April 2, 2007, to revive the above-identified application.

The petition is **GRANTED.**

The petition satisfies the conditions for revival pursuant to the provisions of 37 CFR 1.137(b) in that (1) the reply in the form of a new Oath/Declaration and the Issue Fee Transmittal with payment of the issue fee; (2) the petition fee; (3) the required statement of unintentional delay have been received; and (4) a terminal disclaimer and fee. Accordingly, the response has been accepted as having been unintentionally delayed.

This matter is being referred to the Publishing Division for processing into a patent.

Telephone inquiries regarding this decision should be directed to the undersigned at (571) 272-3206.

Liana Walsh
Petitions Examiner
Office of Petitions

UNITED STATES PATENT AND TRADEMARK OFFICE

Commissioner for Patents
United States Patent and Trademark Office
P.O. Box 1450
Alexandria, VA 22313-1450
www.uspto.gov

OSHA LIANG L.L.P.
1221 MCKINNEY STREET
SUITE 2800
HOUSTON TX 77010

COPY MAILED

JUL 19 2007

OFFICE OF PETITIONS

ON PETITION

In re Application of :
Tomihiro Ohtake :
Application No. 29/245,346 :
Filed: December 21, 2005 :
Attorney Docket No. 04995/276001 :

This is a decision on the petition under 37 CFR 1.137(b), filed February 23, 2007, to revive the above-identified application.

The petition is **DISMISSED**.

Any request for reconsideration of this decision must be submitted within TWO (2) MONTHS from the mail date of this decision. Extensions of time under 37 CFR 1.136(a) are permitted. The reconsideration request should include a cover letter entitled "Renewed Petition under 37 CFR 1.137(b)." This is **not** a final agency action within the meaning of 5 U.S.C. § 704.

A grantable petition under 37 CFR 1.137(b)[1] must be accompanied by: (1) the required reply,[2] unless previously filed; (2) the petition fee as set forth in 37 CFR 1.17(m); (3) a statement that the entire delay in filing the required reply from the due date for the reply until the filing of a grantable petition pursuant to 37 CFR 1.137(b) was unintentional; and (4) any terminal disclaimer (and fee as set forth in 37 CFR 1.20(d)) required by

---

[1] As amended effective December 1, 1997. See Changes to Patent Practice and Procedure; Final Rule Notice, 62 Fed. Reg. 53131, 53194-95 (October 10, 1997), 1203 Off. Gaz. Pat. Office 63, 119-20 (October 21, 1997).

[2] In a nonprovisional application abandoned for failure to prosecute, the required reply may be met by the filing of a continuing application. In an application or patent, abandoned or lapsed for failure to pay the issue fee or any portion thereof, the required reply must be the payment of the issue fee or any outstanding balance thereof.

37 CFR 1.137(c). Where there is a question as to whether either the abandonment or the delay in filing a petition under 37 CFR 1.137 was unintentional, the Commissioner may require additional information. See MPEP 711.03(c)(III)(C) and (D). The instant petition lacks item(s)(4).

A terminal disclaimer and fee is required for the above-identified application.

Further correspondence with respect to this matter should be addressed as follows:

By mail: Mail Stop PETITIONS
Commissioner for Patents
Post Office Box 1450
Alexandria, VA 22313-1450

By hand: Customer Window located at:

Randolph Building
401 Dulany Street
Alexandria, VA 22314

By fax: (571) 273-8300
ATTN: Office of Petitions

Telephone inquiries concerning this decision should be directed to the undersigned at (571) 272-3208.

Karen Creasy
Petitions Examiner
Office of Petitions

UNITED STATES PATENT AND TRADEMARK OFFICE

Commissioner for Patents
United States Patent and Trademark Office
P.O. Box 1450
Alexandria, VA 22313-1450
www.uspto.gov

OSHA LIANG L.L.P.
1221 MCKINNEY STREET
SUITE 2800
HOUSTON TX 77010

COPY MAILED

JUN 05 2008

OFFICE OF PETITIONS

In re Application of	:	
Tomihiro Ohtake	:	
Application No. 29/245,346	:	DECISION GRANTING PETITION
Filed: December 21, 2005	:	UNDER 37 CFR 1.137(b)
Attorney Docket No. 04995/276001	:	

This is a decision on the renewed petition under 37 CFR 1.137(b), filed September 12, 2007, to revive the above-identified application.

The petition is **GRANTED**.

The petition satisfies the conditions for revival pursuant to the provisions of 37 CFR 1.137(b) in that (1) the reply in the form of corrected drawings and terminal disclaimer; (2) the petition fee; and (3) the required statement of unintentional delay have been received. Accordingly, the reply to the Notice of Allowance/Notice of Allowability mailed September 21, 2006, is accepted as having been unintentionally delayed.

Telephone inquiries concerning this decision should be directed to the undersigned at (571) 272-3208.

This application is being referred to the Office of Data Management and for review of the drawings submitted February 23, 2007.

Karen Creasy

Karen Creasy
Petitions Examiner
Office of Petitions

UNITED STATES PATENT AND TRADEMARK OFFICE

Commissioner for Patents
United States Patent and Trademark Office
P.O. Box 1450
Alexandria, VA 22313-1450
www.uspto.gov

BAKER BOTTS L.L.P.
30 ROCKEFELLER PLAZA
44TH FLOOR
NEW YORK NY 10112-4498

COPY MAILED

OCT 09 2008

OFFICE OF PETITIONS

In re Patent No. D547,065	:	
Issued: July 24, 2007	:	
Application No. 29/245,434	:	NOTICE
Filed: December 22, 2005	:	
Attorney Docket No. 072841.0288.DES	:	

This is a notice regarding your request for acceptance of a fee deficiency submission under 37 CFR 1.28. On September 1, 1998, the Court of Appeals for the Federal Circuit held that 37 CFR 1.28(c) is the sole provision governing the time for correction of the erroneous payment of the issue fee as a small entity. **See DH Technology v. Synergystex International, Inc. 154 F.3d 1333, 47 USPQ2d 1865 (Fed. Cir. Sept. 1, 1998).**

The Office no longer investigates or rejects original or reissue applications under 37 CFR 1.56. **1098 Off. Gaz. Pat. Office 502 (January 3, 1989)**. Therefore, nothing in this Notice is intended to imply that an investigation was done.

Your fee deficiency submission under 37 CFR 1.28 is hereby **ACCEPTED**.

This application no longer qualifies for small entity status. Accordingly, all future fees must be paid at the large entity rate.

Sherry D. Brinkley
Petitions Examiner
Office of Petitions

Office of Petitions: Decision Count Sheet

Mailing Month

Office of Petitions Internal Document (version: 4.26.6)

Application No. 29245434

For US serial numbers: enter number only, no slashes or commas. Ex: 10123456

For PCT: enter "51+single digit of year of filing+last 5 numbers", Ex. for PCT/US05/12345, enter 51512345

Deciding Official: BRINKLEY, SHERRY

Count (1) - Palm Credit 29/245,434

Decision Type: 321 - 37 CFR 1.28 TO MAKE ENTITY STATUS LARGE FROM SMALL

Decision: GRANT

Time Period for Reply: n/a

COPY MAILED

OCT 09 2008

OFFICE OF PETITIONS

Notes:

Count (2)

Decision Type: NONE

Decision: n/a

Time Period for Reply: n/a

Notes:

Count (3)

Decision Type: NONE

Decision: n/a

Time Period for Reply: n/a

Notes:

if more than 3 decisions, attach 2nd count sheet & mark this box ☐

_____ Initials of Approving Official (if required)

Printed on: *10/6/2008*

UNITED STATES PATENT AND TRADEMARK OFFICE

Commissioner for Patents
United States Patent and Trademark Office
P.O. Box 1450
Alexandria, VA 22313-1450
www.uspto.gov

ORUM & ROTH LLC
STE 1616
53 W. JACKSON BLVD.
CHICAGO, IL 60604

COPY MAILED

JAN 17 2007

OFFICE OF PETITIONS

In re Application of :
Paul Ottosson et al :
Application No. 29/245,436 : DECISION ON PETITION
Filed: December 21, 2005 : TO WITHDRAW
Attorney Docket No. 14294 : FROM RECORD
:

This is a decision on the Request to Withdraw as attorney or agent of record under 37 C.F.R. § 1.36(b), filed July 16, 2006.

The request is **APPROVED**.

A grantable request to withdraw as attorney/agent of record must be signed by every attorney/agent seeking to withdraw or contain a clear indication that one attorney is signing on behalf of another/others. A request to withdraw will not be approved unless at least 30 (thirty) days would remain between the date of approval and the later of the expiration date of a time to file a response or the expiration date of the maximum time period which can be extended under 37 C.F.R. § 1.136(a).

Catherine Gemrich has been withdrawn as attorney or agent of record; Keith Orum remains of record.

Telephone inquiries concerning this decision should be directed to Irvin Dingle at (571) 272-3210.

David Bucci
Petitions Examiner
Office of Petitions

UNITED STATES PATENT AND TRADEMARK OFFICE

Commissioner for Patents
United States Patent and Trademark Office
P.O. Box 1450
Alexandria, VA 22313-1450
www.uspto.gov

PLUMSEA LAW GROUP, LLC
10411 MOTOR CITY DRIVE
SUITE 320
BETHESDA MD 20817

COPY MAILED

MAR 2 8 2007

OFFICE OF PETITIONS

In re Patent No. D528,485 :
Issued: September 19, 2006 :
Application No. 29/245,499 : ON PETITION
Filed: December 27, 2005 :
Attorney Docket Number: 47-1137 :

This is a decision on the petition, filed November 8, 2006, under 37 CFR 1.183, to correct the assignee's name on the front of the Patent, which is being treated as a request under 37 CFR 3.81(b)[1].

The petition is **GRANTED**.

Petitioner states that the assignee is HONDA MOTOR CO., LTD. and seeks to correct the face of the patent due to a typographical error made on the Fee(s) Transmittal form PTOL-85(b).

Accordingly, petitioner requests that a certificate of correction be issued to reflect the correct assignee on the front page of the Letters Patent.

37 CFR 3.81(b), effective June 25, 2004, reads:

> *After payment of the issue fee:* Any request for issuance of an application in the name of the assignee submitted after the date of payment of the issue fee, and any request for a patent to be corrected to state the name of the assignee, must state that the assignment was submitted for recordation as set forth in § 3.11 before issuance of the patent, and must include a request for a certificate of correction under § 1.323 of this chapter (accompanied by the fee set forth in § 1.20(a) and the processing fee set forth in § 1.17(i) of this chapter.

The request is accompanied by a certificate of correction. Office assignment records reflect that HONDA MOTOR CO., LTD. is the assignee of record. The petition fee and fee for the certificate of correction have been applied.

---

[1] *See* Official Gazette of June 22, 2004

Accordingly, as the request complies with the provisions of 37 CFR 3.81(b), it would be appropriate for a certificate of correction to issue.

Inquiries concerning this decision should be directed to the undersigned at (571) 272-3212. Any questions concerning the issuance of a certificate of correction should be directed to the Certificates of Correction Branch at (703) 305-8309.

This matter is being referred to the Certificates of Correction Branch for issuance of a certificate of correction.

Patricia Faison-Ball
Senior Petitions Attorney
Office of Petitions

UNITED STATES PATENT AND TRADEMARK OFFICE

Commissioner for Patents
United States Patent and Trademark Office
P.O. Box 1450
Alexandria, VA 22313-1450
www.uspto.gov

FRISHAUF, HOLTZ, GOODMAN & CHICK, PC
220 FIFTH AVENUE
16th FLOOR
NEW YORK, NY 10001-7708

COPY MAILED

APR 0 5 2006

OFFICE OF PETITIONS

In re Application of :
Ono, et al. :
Application No. 29/245,574 : ON PETITION
Filed: December 22, 2005 :
Attorney Docket No. 05896/LH :

This is in response to the papers styled, "Petition To Withdraw Patent Office Notice Stating That Fig. 4 Was Omitted From Original Application," filed January 30, 2006, which has been treated as a petition under 37 CFR 1.53 requesting that the above-identified application be accorded a filing date of December 22, 2005, including Figure 4 described in the specification.

The application was submitted on December 22, 2005. However, on January 18, 2006, the Office of Initial Patent Examination (OIPE) mailed a "Notice of Omitted Item(s) in a Nonprovisional Application," (Notice) that stated the application had been accorded a filing date, and that Figure 4 described in the specification appears to have been omitted.

In response, on January 30, 2006, the instant petition and a copy of Figure 4 were submitted. Additionally, a copy of applicants' postcard receipt that acknowledges receipt of "6 sheets formal drawings (Figs. 1-7)" on December 22, 2005, accompanied the papers. A review of the application file indicates the presence of only five (5) sheets of drawings originally filed on December 22, 2005. It is assumed that the missing sheet of drawings was misplaced by the Office.

In view of the above, the petition is granted and the Notice is hereby withdrawn.

The $400.00 petition fee will be refunded to deposit account no. 06-1378.

This application will be returned to OIPE for processing with a filing date of December 22, 2005, using the sheet of drawings, containing Figure 4, submitted on January 30, 2006.

Telephone inquiries concerning this matter may be directed to the undersigned at (571) 272-3228.

Edward J. Tannouse
Petitions Attorney
Office of Petitions
Office of the Deputy Commissioner
for Patent Examination Policy

UNITED STATES PATENT AND TRADEMARK OFFICE

Commissioner for Patents
United States Patent and Trademark Office
P.O. Box 1450
Alexandria, VA 22313-1450
www.uspto.gov

8-8-06

wk

In re Application of :
Gerald E. Warriner :
Serial Number: 29/245,622 : DECISION
Filed: December 27, 2005 : ON
For: AVE PLANNER : PETITION

This is in response to the request filed December 27, 2005 under 37 C.F.R. 1.102 to make special because of applicant's age.

The Petition is **GRANTED**.

William Krynski, Sprecial Program Examiner
Technology Center 2900
Designs

GERALD E. WARRINER
9037-H YORK LANE
WEST MELBOURNE FL 32904

UNITED STATES PATENT AND TRADEMARK OFFICE

Commissioner for Patents
United States Patent and Trademark Office
P.O. Box 1450
Alexandria, VA 22313-1450
www.uspto.gov

BROOKS KUSHMAN P.C.
1000 TOWN CENTER
TWENTY-SECOND FLOOR
SOUTHFIELD, MI 48075

COPY MAILED

FEB 15 2007

OFFICE OF PETITIONS

In re Application of :
Sun Yu et al :
Application No. 29/245,654 : ON PETITION
Filed: December 27, 2005 :
Attorney Docket No. ZDG 0105 DUS1 :

This is a decision on the petition, filed September 1, 2006 under 37 CFR 1.137(b) to revive the above-identified application.

The petition is **DISMISSED.**

Any request for reconsideration of this decision must be submitted within TWO (2) MONTHS from the mail date of this decision. Extensions of time under 37 CFR 1.136(a) are permitted. The reconsideration request should include a cover letter entitled "**Renewed Petition under 37 CFR 1.137(b)**." This is **not** final agency action within the meaning of 5 U.S.C. § 704.

The above-identified application became abandoned for failure to submit the Issue fee and drawings in a timely manner in reply to the Notice of Allowance mailed March 23, 2006, which set a statutory period for reply of three (3) months. Accordingly, the above-identified application became abandoned on June 24, 2006.

A grantable petition under 37 CFR 1.137(b) must be accompanied by: (1) the required reply, unless previously filed; (2) the petition fee as set forth in 37 CFR 1.17(m); (3) a statement that the entire delay in filing the required reply from the due date for the reply until the filing of a grantable petition pursuant to 37 CFR 1.137(b) was unintentional; and (4) any terminal disclaimer (and fee as set forth in 37 CFR 1.20(d)) required by 37 CFR 1.137(c). Where there is a question as to whether either the abandonment or the delay in filing a petition under 37 CFR 1.137 was unintentional, the Commissioner may require additional information. See MPEP 711.03(c)(III)(C) and (D). The instant petition lack(s) item(s) (4).

The petition does not satisfies the conditions for revival pursuant to the provisions of 37 CFR 1.137(b) in that (4) the terminal disclaimer was not received. Accordingly, this petition can not be revive until the terminal disclaimer is received.

Further correspondence with respect to this matter should be addressed as follows:

By mail: Mail Stop PETITION
Commissioner for Patents
Post Office Box 1450
Alexandria, VA 22313-1450

By hand: Customer Service Window
Randolph Building
401 Dulany Street
Alexandria, VA 22314

By facsimile: (571) 273-8300
ATTN: Office of Petitions

Telephone inquiries concerning this decision should be directed to the undersigned at (571) 272-3210.

Irvin Dingle
Petitions Examiner
Office of Petitions

UNITED STATES PATENT AND TRADEMARK OFFICE

Commissioner for Patents
United States Patent and Trademark Office
P.O. Box 1450
Alexandria, VA 22313-1450
www.uspto.gov

BROOKS KUSHMAN P.C.
1000 TOWN CENTER
TWENTY-SECOND FLOOR
SOUTHFIELD, MI 48075

COPY MAILED

AUG 0 2 2007

OFFICE OF PETITIONS

In re Application of :
Sun Yu et al :
Application No. 29/245,654 : ON PETITION
Filed: December 27, 2005 :
Attorney Docket No. ZDG 0105 DUS1 :

This is a decision on the renewed petition filed March 2, 2007 under 37 CFR 1.137(b), to revive the above-identified application.

The petition is **GRANTED.**

Telephone inquiries concerning this decision should be directed to the undersigned at (571) 272-3210.

This matter is being referred to the Publishing Division for further processing.

Irvin Dingle
Petitions Examiner
Office of Petitions

UNITED STATES PATENT AND TRADEMARK OFFICE

COMMISSIONER FOR PATENTS
UNITED STATES PATENT AND TRADEMARK OFFICE
P.O. BOX 1450
ALEXANDRIA, VA 22313-1450
www.uspto.gov

COPY MAILED

JAN 17 2007

OFFICE OF PETITIONS

MORLAND C. FISCHER
SUITE 1050
2030 MAIN STREET
IRVINE, CA 92614

In re Application of
Julien Egger
Application No. 29/245,828
Filed: December 30, 2005
Attorney Docket No. TSC-184

ON PETITION

This is a decision on the petition, filed December 13, 2006, to revive the above-identified application under the provisions of 37 CFR 1.137(b).

The petition is **GRANTED**.

The above-identified application became abandoned for failure to respond in a timely manner to the Notice of Allowability mailed July 5, 2006. A Notice of Abandonment was mailed on November 8, 2006. In response, on December 13, 2006, the present petition was filed.

The petition is found to comply with the requirements of 37 CFR 1.137(b).

The terminal disclaimer filed December 13, 2006 has been entered and made of record.

The application is being referred to the Office of Publications to oversee the review of the drawing filed November 6, 2006.

Telephone inquires related to this decision may be directed to the undersigned at (571) 272-3204. Status inquires related to processing at Publishing Division should be directed to (571) 272-4200.

Sherry D. Brinkley
Petitions Examiner
Office of Petitions

UNITED STATES PATENT AND TRADEMARK OFFICE

Commissioner for Patents
United States Patent and Trademark Office
P.O. Box 1450
Alexandria, VA 22313-1450
www.uspto.gov

THE PROCTER & GAMBLE COMPANY
GLOBAL LEGAL DEPARTMENT - IP
SYCAMORE BUILDING - 4TH FLOOR
299 EAST SIXTH STREET
CINCINNATI OH 45202

COPY MAILED
SEP 15 2008

In re Application of :
Jill M. SHURTLEFF et al. :
Application No. 29/245,867 : DECISION ON PETITION
Filed: December 29, 2005 :
Attorney Docket No. 00216-766001/T-757 :

This is a decision on the petition under 37 CFR 1.137(b), filed May 05, 2008, to revive the above-identified design application.

The petition is **GRANTED**.

The application became abandoned for failure to timely pay the issue fee on or before March 10, 2008, as required by the Notice of Allowance and Fee(s) Due, mailed December 10, 2007, which set a statutory period for reply of three (3) months. Accordingly, the application became abandoned on March 11, 2008. A Notice of Abandonment was mailed on April 03, 2008.

The petition satisfies the requirements of 37 CFR 1.137(b) in that petitioner has supplied (1) the reply in the form of the $820 issue fee, (2) the petition fee of $1540, (3) a proper statement of unintentional delay, and (4) a terminal disclaimer and fee as required by 37 CFR 1.137(d). Accordingly, the failure to timely pay the issue fee as required by the Notice of Allowance is accepted as being unintentionally delayed.

The terminal disclaimer is accepted and has been made of record. Any continuing application filed from this application must contain a copy of the terminal disclaimer. The copy of the terminal disclaimer must be filed with a cover letter requesting the terminal disclaimer be recorded on the continuing application. A copy of this decision should be attached to the cover letter.

The power of attorney filed with petition on May 05, 2008 has been accepted and made of record.

Telephone inquiries concerning this decision should be directed to Tredelle Jackson at (571) 272-2783.

This application is being referred to Office of Data Management for processing it into a patent.

Ramesh Krishnamurthy
Petitions Examiner
Office of Petitions

cc: **FISH & RICHARDSON P.C.**
P.O. BOX 1022
MINNEAPOLIS, MN 55440-1022

IN THE UNITED STATES PATENT AND TRADEMARK OFFICE

RECEIVED
CENTRAL FAX CENTER
MAY 05 2008

Application No.	:	29/245,867
Inventor(s)	:	Jill M. Shurtleff, *et al.*
Filed	:	December 29, 2005
Art Unit	:	2912
Examiner	:	Carol Rademaker
Docket No.	:	00216-766001/T-757 (ZD00118)
Confirmation No.	:	1931
Customer No.	:	27752
Title	:	Personal Care Dispenser

STATEMENT OF REASON FOR DELAY/PETITION TRANSMITTAL

Mail Stop Petitions
Commissioner for Patents
P.O. Box 1450
Alexandria, VA 22313-1450

Dear Sir:

Transmitted herewith is a Petition for Revival of an Application for Patent Abandoned. The above-identified application became abandoned for failure to timely file the issue fee. The abandonment date of this application is March 11, 2008 (i.e., the day after the expiration date of the period set for response). The entire delay in filing the required reply from the due date for the reply until the filing of a grantable petition under 37 CFR 1.137(b) was unintentional.

The Office is hereby authorized to charge payment of the petition fee to Deposit Account No. 16-2480.

Respectfully submitted,

THE PROCTER & GAMBLE COMPANY

By _____
Signature
Andrew J. Hagerty
Typed or Printed Name
Registration No. 44,141
(513) 626-0051

Date: May 5, 2008
Customer No. 27752
Reason-PetitionTransmittal.doc
(Revised 11/22/2005)

PETITION FOR REVIVAL OF AN APPLICATION FOR PATENT ABANDONED UNINTENTIONALLY UNDER 37 CFR 1.137(b)	Docket Number 00216-766001/T-757

First Named Inventor: Jill M. Shurtleff, *et al.*

Application No.: 29/245,867 Art Unit: 2912

Filed: December 29, 2005 Examiner: Carol Rademaker

RECEIVED
CENTRAL FAX CENTER
MAY 05 2008

Title: PERSONAL CARE DISPENSER

Attention: Office of Petitions
Mail Stop Petition
Commissioner for Patents
P.O. Box 1450
Alexandria, VA 22313-1450
FAX (571) 273-8300

NOTE: If information or assistance is needed in completing this form, please contact Petitions Information at (571) 272-3282.

The above-identified application became abandoned for failure to file a timely and proper reply to a notice or action by the United States Patent and Trademark Office. The date of abandonment is the day after the expiration date of the period set for reply in the Office notice or action plus any extensions of time actually obtained.

APPLICANT HEREBY PETITIONS FOR REVIVAL OF THIS APPLICATION

NOTE: A grantable petition requires the following items:
(1) Petition fee;
(2) Reply and/or issue fee;
(3) Terminal disclaimer – required for all utility applications filed before June 8, 1995; and for all design applications; and
(4) Statement that the entire delay was unintentional.

1. Petition fee
[X] Authorization is given to charge the required fee under 37 CFR 1.17(m), and any additional fees that may be required in connection with submission of this petition, or to credit any overpayment, to Deposit Account No. 16-2480 in the name of The Procter & Gamble Company.

2. Reply and/or Issue Fee
A. The reply to the last Communication from the Office in the form of _____ (identify type of reply):
[] has been filed previously on _____.
[] is enclosed herewith.

B. The issue fee(s).
[] has been paid previously on _____.
[X] transmittal form is enclosed herewith.

05/06/2008 PCHOMP1 00000002 162480 29245867
01 FC:1453 1540.00 DA

PAGE 2/8 * RCVD AT 5/5/2008 4:18:34 PM [Eastern Daylight Time] * SVR:USPTO-EFXRF-6/30 * DNIS:2738300 * CSID:513 626 1355 * DURATION (mm-ss):03-12

3. Terminal disclaimer

[] Since this utility application was filed on or after June 8, 1995, no terminal disclaimer is required.

[X] A terminal disclaimer disclaiming the required period of time is enclosed herewith.

4. Statement. The entire delay in filing the required reply from the due date for the required reply until the filing of a grantable petition under 37 CFR 1.137(b) was unintentional. [NOTE: The United States Patent and Trademark Office may require additional information if there is a question as to whether either the abandonment or the delay in filing a petition under 37 CFR 1.137(b) was unintentional (MPEP 711.03(c), subsections (III)(C) and(D))].

May 5, 2008
Date

Signature

Telephone Number: (513) 626-0051

Andrew J. Hagerty
Typed or printed name

Registration Number: 44,141

CUSTOMER NO.: 27752

Enclosures: [] Reply
[X] Issue Fee(s) Transmittal Form
[X] Terminal Disclaimer Form
[X] Additional sheets containing statements establishing unintentional delay
[X] POA-Revocation with New POA form – 1 page; Statement Under 37 CFR 3.73(b) - 1 page

PAGE 3/8 * RCVD AT 5/5/2008 4:18:34 PM [Eastern Daylight Time] * SVR:USPTO-EFXRF-6/30 * DNIS:2738300 * CSID:513 626 1355 * DURATION (mm-ss):03-12

TERMINAL DISCLAIMER TO ACCOMPANY PETITION	Docket Number (Optional) 00216-766001/T-757

In re Application of:

Name: Jill M. Shurtleff, *et al.*

Application Number: 29/245,867

Filed: December 29, 2005

For: PERSONAL CARE DISPENSER

RECEIVED
CENTRAL FAX CENTER
MAY 05 2008

The owner*, The Gillette Company, of 100% interest in the above-identified application hereby disclaims a terminal part of the term of any patent granted on the above-identified application equivalent to: (1) if the above-identified application, is a design application, the period of abandonment of the above-identified application, and (2) if the above-identified application is a utility or plant application, the lesser of: (a) the period of abandonment of the application; or (b) the period extending beyond twenty years from the date on which the above-identified application was filed in the United States or, if the application contains a specific reference to an earlier filed application(s) under 35 U.S.C. 120, 121, or 365(c), from the date on which the earliest such application was filed. This disclaimer also applies to any patent granted on a utility or plant application filed before June 8, 1995 but before May 29, 2002, where the application became abandoned during appeal, interference or while under secrecy order (MPEP 711.03(c), or a design application, that contains a specific reference under 35 U.S.C. 120, 121, or 365(c) to the above-identified application. This disclaimer is binding upon the grantee, and its successors or assigns.

Check either box 1 or 2 below, if appropriate.

1. [] For submissions on behalf of an organization (e.g. corporation, partnership, university, government agency, etc.), the person signing is empowered to act on behalf of the organization.

Statement Under 37 CFR 3.73(b)
The Procter & Gamble Company states it is the assignee of the entire right, title, and interest in the above-identified patent application by virtue of an assignment from the inventor(s). The assignment was recorded in the United States Patent and Trademark Office March 7, 2006 at Reel 017313, Frame 0183, or for which a copy thereof is attached.

2. [X] The undersigned is an attorney of record.

Signature — Date: May 5, 2008

Andrew J. Hagerty — Typed or printed name

44,141 — Registration Number, if applicable

[X] Please charge the terminal disclaimer fee under 37 CFR 1.20(d) to Deposit Account 16-2480.

SEND TO: Mail Stop Petition, Commissioner for Patents, P.O. Box 1450, Alexandria, VA 22313-1450.

05/06/2008 PCHOMP1 00000002 162480 29245867
04 FC:1814 130.00 DA

UNITED STATES PATENT AND TRADEMARK OFFICE

UNITED STATES DEPARTMENT OF COMMERCE
United States Patent and Trademark Office
Address: COMMISSIONER FOR PATENTS
P.O. Box 1450
Alexandria, Virginia 22313-1450
www.uspto.gov

APPL NO.	FILING OR 371 (c) DATE	ART UNIT	FIL FEE REC'D	ATTY.DOCKET NO	DRAWINGS	TOT CLMS	IND CLMS
29/245,875	12/28/2005	2913	430	JCLA18939-DS	4	1	1

CONFIRMATION NO. 1894

J.C. Patents
Suite 250
4 Venture
Irvine, CA 92618

CORRECTED FILING RECEIPT

OC000000018103279

Date Mailed: 02/21/2006

Receipt is acknowledged of this regular Patent Application. It will be considered in its order and you will be notified as to the results of the examination. Be sure to provide the U.S. APPLICATION NUMBER, FILING DATE, NAME OF APPLICANT, and TITLE OF INVENTION when inquiring about this application. Fees transmitted by check or draft are subject to collection. Please verify the accuracy of the data presented on this receipt. **If an error is noted on this Filing Receipt, please mail to the Commissioner for Patents P.O. Box 1450 Alexandria Va 22313-1450. Please provide a copy of this Filing Receipt with the changes noted thereon. If you received a "Notice to File Missing Parts" for this application, please submit any corrections to this Filing Receipt with your reply to the Notice. When the USPTO processes the reply to the Notice, the USPTO will generate another Filing Receipt incorporating the requested corrections (if appropriate).**

Applicant(s)

Fumihiko Hosoya, Tokyo, JAPAN;

Power of Attorney:

Jiawei Huang--43330
Belinda Lee--46863

Domestic Priority data as claimed by applicant

Foreign Applications

JAPAN 2005-019498 07/05/2005

If Required, Foreign Filing License Granted: 02/03/2006

The country code and number of your priority application, to be used for filing abroad under the Paris Convention, is US29/245,875

Projected Publication Date: None, application is not eligible for pre-grant publication

Non-Publication Request: No

Early Publication Request: No

Title

Optical disk drive

Preliminary Class

D14

PROTECTING YOUR INVENTION OUTSIDE THE UNITED STATES

Since the rights granted by a U.S. patent extend only throughout the territory of the United States and have no effect in a foreign country, an inventor who wishes patent protection in another country must apply for a patent in a specific country or in regional patent offices. Applicants may wish to consider the filing of an international application under the Patent Cooperation Treaty (PCT). An international (PCT) application generally has the same effect as a regular national patent application in each PCT-member country. The PCT process **simplifies** the filing of patent applications on the same invention in member countries, but **does not result** in a grant of "an international patent" and does not eliminate the need of applicants to file additional documents and fees in countries where patent protection is desired.

Almost every country has its own patent law, and a person desiring a patent in a particular country must make an application for patent in that country in accordance with its particular laws. Since the laws of many countries differ in various respects from the patent law of the United States, applicants are advised to seek guidance from specific foreign countries to ensure that patent rights are not lost prematurely.

Applicants also are advised that in the case of inventions made in the United States, the Director of the USPTO must issue a license before applicants can apply for a patent in a foreign country. The filing of a U.S. patent application serves as a request for a foreign filing license. The application's filing receipt contains further information and guidance as to the status of applicant's license for foreign filing.

Applicants may wish to consult the USPTO booklet, "General Information Concerning Patents" (specifically, the section entitled "Treaties and Foreign Patents") for more information on timeframes and deadlines for filing foreign patent applications. The guide is available either by contacting the USPTO Contact Center at 800-786-9199, or it can be viewed on the USPTO website at http://www.uspto.gov/web/offices/pac/doc/general/index.html.

For information on preventing theft of your intellectual property (patents, trademarks and copyrights), you may wish to consult the U.S. Government website, http://www.stopfakes.gov. Part of a Department of Commerce initiative, this website includes self-help "toolkits" giving innovators guidance on how to protect intellectual property in specific countries such as China, Korea and Mexico. For questions regarding patent enforcement issues, applicants may call the U.S. Government hotline at 1-866-999-HALT (1-866-999-4158).

LICENSE FOR FOREIGN FILING UNDER
Title 35, United States Code, Section 184
Title 37, Code of Federal Regulations, 5.11 & 5.15

GRANTED

The applicant has been granted a license under 35 U.S.C. 184, if the phrase "IF REQUIRED, FOREIGN FILING LICENSE GRANTED" followed by a date appears on this form. Such licenses are issued in all applications where the conditions for issuance of a license have been met, regardless of whether or not a license may be required as set forth in 37 CFR 5.15. The scope and limitations of this license are set forth in 37 CFR 5.15(a) unless an earlier license has been issued under 37 CFR 5.15(b). The license is subject to revocation upon written notification. The date indicated is the effective date of the license, unless an earlier license of similar scope has been granted under 37 CFR 5.13 or 5.14.

This license is to be retained by the licensee and may be used at any time on or after the effective date thereof

unless it is revoked. This license is automatically transferred to any related applications(s) filed under 37 CFR 1.53(d). This license is not retroactive.

The grant of a license does not in any way lessen the responsibility of a licensee for the security of the subject matter as imposed by any Government contract or the provisions of existing laws relating to espionage and the national security or the export of technical data. Licensees should apprise themselves of current regulations especially with respect to certain countries, of other agencies, particularly the Office of Defense Trade Controls, Department of State (with respect to Arms, Munitions and Implements of War (22 CFR 121-128)); the Bureau of Industry and Security, Department of Commerce (15 CFR parts 730-774); the Office of Foreign Assets Control, Department of Treasury (31 CFR Parts 500+) and the Department of Energy.

NOT GRANTED

No license under 35 U.S.C. 184 has been granted at this time, if the phrase "IF REQUIRED, FOREIGN FILING LICENSE GRANTED" DOES NOT appear on this form. Applicant may still petition for a license under 37 CFR 5.12, if a license is desired before the expiration of 6 months from the filing date of the application. If 6 months has lapsed from the filing date of this application and the licensee has not received any indication of a secrecy order under 35 U.S.C. 181, the licensee may foreign file the application pursuant to 37 CFR 5.15(b).

UNITED STATES PATENT AND TRADEMARK OFFICE

Commissioner for Patents
United States Patent and Trademark Office
P.O. Box 1450
Alexandria, VA 22313-1450
www.uspto.gov

ANGUS C. FOX, III
4093 N. IMPERIAL WAY
PROVO, UT 84604-5386

COPY MAILED

NOV 16 2007

OFFICE OF PETITIONS

ON PETITION

In re Application :
Warren R. Osborn et al. :
Application No. 29/245,879 :
Filed: December 29, 2005 :
Attorney Docket No. SSTONE04-01CIP-D :

This is a decision on the petition under the unintentional provisions of 37 CFR 1.137(b), filed August 16, 2007, to revive the above-identified application.

The petition is **DISMISSED**.

Any request for reconsideration of this decision must be submitted within TWO (2) MONTHS from the mail date of this decision. Extensions of time under 37 CFR 1.136(a) are permitted. The reconsideration request should include a cover letter entitled "Renewed Petition under 37 CFR 1.137(b)." This is **not** a final agency action within the meaning of 5 U.S.C. § 704.

The application became abandoned for failure to timely submit corrected drawings in a timely manner in reply to the Notice of Allowability mailed on September 28, 2006, which set a period for reply of three (3) months. Accordingly, the application became abandoned on December 29, 2006.

A grantable petition under 37 CFR 1.137(b) must be accompanied by: (1) the required reply, unless previously filed; (2) the petition fee as set forth in 37 CFR 1.17(m); (3) a statement that the entire delay in filing the required reply from the due date for the reply until the filing of a grantable petition pursuant to 37 CFR 1.137(b) was unintentional; and (4) any terminal disclaimer (and fee as set forth in 37 CFR 1.20(d)) required by 37 CFR 1.137(d). Where there is a question as to whether either the abandonment or the delay in filing a petition under 37 CFR 1.137 was unintentional, the Director may require additional information. See MPEP 711.03(c)(II)(C) and (D). The instant petition lacks items (3) and (4).

As to item (3) the statement of unintentional delay is presently not acceptable since it was not signed. Petitioner's attention is directed to 37 CFR 1.33(b).

As to item (4), the terminal disclaimer is not acceptable. In this regard, the terminal disclaimer states that Warren R. Osborn is owner of 100% interest in this application. However, assignment records do not reflect that co-inventor Bryan P. Dunford has assigned his interests in this application to Mr. Osborn. Therefore, absent an assignment to Mr. Osborn, the terminal disclaimer must set forth both inventors' names.

Further correspondence with respect to this matter should be addressed as follows:

By Mail: Mail Stop PETITION
Commissioner for Patents
P. O. Box 1450
Alexandria, VA 22313-1450

By hand: U. S. Patent and Trademark Office
Customer Service Window, Mail Stop Petitions
Randolph Building
401 Dulany Street
Alexandria, VA 22314

The centralized facsimile number is **(571) 273-8300.**

Telephone inquiries concerning this decision should be directed to Kimberly Inabinet at (571) 272-4618.

Frances Hicks
Petitions Examiner
Office of Petitions

UNITED STATES PATENT AND TRADEMARK OFFICE

Commissioner for Patents
United States Patent and Trademark Office
P.O. Box 1450
Alexandria, VA 22313-1450
www.uspto.gov

ANGAS C. FOX, III
4093 N. IMPERIAL WAY
PROVO, UT 84604-5386

COPY MAILED

MAR 04 2008

In re Application of	:	
Warren R. Osborn et al.	:	
Application No. 29/245,879	:	DECISION ON PETITION
Filed: December 29, 2005	:	
Attorney Docket No. SSTONE04-01CIP-D	:	

This is a decision on the renewed petition under the unintentional provisions of 37 CFR 1.137(b), filed January 22, 2008, to revive the above-identified application.

The petition is **GRANTED**.

The application became abandoned for failure to timely submit corrected drawings in a timely manner in reply to the Notice of Allowability mailed on September 28, 2006, which set a period for reply of three (3) months. Accordingly, the application became abandoned on December 29, 2006.

The petition satisfies the requirements of 37 CFR 1.137(b) in that petitioner has supplied (1) the reply in the form of corrected drawings, (2) the petition fee of $750.00, (3) a proper statement of unintentional delay, and (4) a terminal disclaimer and fee as required by 37 CFR 1.137(d). Accordingly, the reply to the Notice of Allowability mailed September 28, 2006 is accepted as being unintentionally delayed.

Telephone inquiries concerning this decision should be directed to Kimberly Inabinet at (571) 272-4618.

This application is being referred to the Office of Data Management for further processing into a patent.

Andrea Smith
Petitions Examiner
Office of Petitions

UNITED STATES PATENT AND TRADEMARK OFFICE

Commissioner for Patents
United States Patent and Trademark Office
P.O. Box 1450
Alexandria, VA 22313-1450
www.uspto.gov

COPY MAILED

MAY 0 3 2006

OFFICE OF PETITIONS

BRUCE & MCCOY
ONE KAISER PLAZA
STE 750
OAKLAND CA 94612

In re Application of :
Ilwhan Park :
Application No. 29/245,929 : DECISION DISMISSING PETITION
Deposited: December 29, 2005 :
Filed: March 24, 2006 :
Attorney Docket No. 2523.003

This is a decision on the petition filed March 24, 2006, to accord the above-identified application a filing date of December 29, 2005.

Application papers in the above-identified application were deposited on December 29, 2005. However, on February 17, 2006 the Office of Initial Patent Examination mailed applicant a "Notice of Incomplete Nonprovisional Application." Applicant was notified that the application papers had not been accorded a filing date because the application was deposited without drawings. The Notice set a two month extendable period for reply.

In response, on March 24, 2006, applicant filed the present petition to accord a filing date of December 29, 2005. Applicant asserts that a complete application, including drawings, was filed on December 29, 2005.

The PTO file is the official record of papers originally filed in this application. A review of the official file reveals that no drawings were filed on December 29, 2005, since those papers are not present in the file. An applicant alleging that a paper was filed in the PTO and later misplaced has the burden of proving the allegation by a preponderance of the evidence. The assertions in the petition contain counsel's recall of routine events and are not more persuasive than the record of what was filed as shown by the official file.

Furthermore, the Office has a well established and well publicized practice of providing a receipt for papers filed in the Office to any applicant desiring a receipt. The practice requires that any paper for which a receipt is desired be filed in the Office with a self-addressed postcard identifying the paper. A postcard receipt which itemizes and properly identifies the papers which are being filed serves as *prima facie* evidence of receipt in the Office of all the items listed thereon on the date stamped thereon by the Office. See MPEP 503. **Applicant has not submitted a proper return postcard showing that the application was filed on December 29, 2005.**

Because no drawings were present on December 29, 2005, the date the application was deposited, the application can not be accorded a filing date of December 29, 2005.

Accordingly, the petition is **DISMISSED**.

The application will be accorded a filing date based upon the date that the missing drawings were received in the Office.

Applicant may file a request for reconsideration providing they submit a proper postcard receipt showing that the application was filed on December 29, 2005, including drawings. Any request for reconsideration of this decision should be filed within **TWO (2) MONTHS** of the date of this decision in order to be considered timely. 37 CFR 1.181(f). This time period may not be extended pursuant to 37 CFR 1.136.

Further correspondence with respect to this matter should be addressed as follows:

By mail: Mail Stop Petitions
Commissioner for Patents
P.O. Box 1450
Alexandria VA 22313-1450

By FAX: (703) 872-9306
Attn: Office of Petitions

The application file will be forwarded to the Office of Initial Patent Examination for further processing with a **filing date of March 24, 2006**, using the application papers submitted on December 29, 2005, together with the one (1) sheet of drawings submitted on petition filed March 24, 2006.

Telephone inquiries related to this decision should be directed to the undersigned at (571)272-3207.

Cliff Congo
Petitions Attorney
Office of Petitions

UNITED STATES PATENT AND TRADEMARK OFFICE

Commissioner for Patents
United States Patent and Trademark Office
P.O. Box 1450
Alexandria, VA 22313-1450
www.uspto.gov

March 19, 2008

Bruce McCoy
One Kaiser Plaza
Ste. 750
Oakland, Ca 94612

Patent No.:D553,742S
Application No.: 29/245,929
Inventor(s): Ilwhan Park
Issued: March 24, 2006
Title: **Anterior Lumbar Interbody Fusion Implant**

Re: Request for Certificate of Correction

Consideration has been given your request for the issuance of a certificate of correction for the above-identified patent under the provisions of Rule(s) 1.322 and/or 1.323.

Assignees' names and addresses (assignment data) printed in a patent, are based *solely* on information supplied in the appropriate space for identifying the assignment data, i.e., item 3 of the Issue Fee Transmittal Form PTOL-85B. Granting of a request under 37 CFR 3.81(b) is required to correct applicant's error providing ***incorrect or erroneous*** assignment data, *before* issuance of a Certificate of Correction, under 37 CFR 1.323 *(see Manual of Patent Examining Procedures (M.P.E.P) Chp.1400, sect. 1481).* This procedure is required *at any time after the issue fee is paid*, including after issuance of the patent.

In view of the foregoing, your request, in this matter, is hereby denied.

A request to correct the Assignee under 37 CFR 3.81(b) should include:

A. **the processing fee set forth in 37 CFR 1.117(h) (currently $130);**
B. a statement that the failure to include the correct assignee name on the PTOL-85B was inadvertent; and
C. a copy of the Notice of Recordation of Assignment Document, reflecting the reel and frame number where the assignment(s) is recorded and/or reflecting proof of *the date* the assignment was submitted for recordation.

In the Request, Applicant(s) may request that the file be forwarded to Certificates of Correction Branch, for issuance of a Certificate of Correction, if the Request is granted.

Any request under 37 CFR 3.81(b) should be directed to the following address or facsimile number:

By mail:	Mail Stop PETITIONS Commissioner for Patents Post Office Box 1450 Alexandria, VA 22313-1450
By hand:	Customer Service Window Mail Stop Petitions Randolph Building 401 Dulany Street Alexandria, VA 22314
By fax:	(571) 273-0025 ATTN: Office of Petitions

Delora Dillard
For Mary Diggs, Supervisor
Decisions & Certificate of Correction Branch
(703) 305-8309 or (703) **308-9250 ext 172**

dd

UNITED STATES PATENT AND TRADEMARK OFFICE

Commissioner for Patents
United States Patent and Trademark Office
P.O. Box 1450
Alexandria, VA 22313-1450
www.uspto.gov

BRUCE & MCCOY
ONE KAISER PLAZA
STE. 750
OAKLAND CA 94612

MAILED

JAN 14 2010

OFFICE OF PETITIONS

In re Patent No. D553,742 :
Issue Date: October 23, 2007 :
Application No. 29/245,929 : ON PETITION
Filed: March 24, 2006 :
Attorney Docket No. 2523.003 :

This is a decision on the petition filed November 10, 2008, which is being treated as a petition under 37 CFR 3.81(b) to correct the name of the assignee on the front page of the above-identified patent by way of a certificate of correction.

The petition is **DISMISSED**.

Petitioner requests to correct the assignee's name by way of a certificate of correction in the name of "TBI"

37 CFR 3.81(b), effective June 25, 2004, reads:

> *After payment of the issue fee:* Any request for issuance of an application in the name of the assignee submitted after the date of payment of the issue fee, and any request for a patent to be corrected to state the name of the assignee, must state that the assignment was submitted for recordation as set forth in § 3.11 **before issuance of the patent**, and must include a request for a certificate of correction under § 1.323 of this chapter (accompanied by the fee set forth in § 1.20(a) and the processing fee set forth in § 1.17(i) of this chapter [emphasis added]. *See also* MPEP 1481.01.

U.S. Patent and Trademark Office assignment records disclose that an assignment from Reel/Frame: 017440/0602 recorded on January 12, 2006, shows the name as "Tissue Banks International" not "TBI". Accordingly, since the assignment does not show the assignee as "TBI" a certificate of correction would not be proper.

It is also noted that the request under 37 CFR 3.81(b) was not accompanied by a request for a certificate of correction (and fee) as required by 3.81(b). *See also* MPEP 1481.01. As petitioner has failed to comply with the provisions of 37 CFR 3.81(b), the request cannot be granted at this time.

Telephone inquiries concerning this decision on petition should be directed to undersigned at (571) 272-4584.

JoAnne Burke
Petitions Examiner
Office of Petitions

UNITED STATES PATENT AND TRADEMARK OFFICE

Commissioner for Patents
United States Patent and Trademark Office
P.O. Box 1450
Alexandria, VA 22313-1450
www.uspto.gov

BRUCE & MCCOY
ONE KAISER PLAZA
STE. 750
OAKLAND CA 94612

MAILED

MAR 2 9 2010

OFFICE OF PETITIONS

In re Patent No. D553,742 :
Issue Date: October 23, 2007 :
Application No. 29/245,929 : ON PETITION
Filed: March 24, 2006 :
Attorney Docket No. 2523.003 :

This is a decision on the renewed petition filed February 17, 2010, which is being treated as a petition under 37 CFR 3.81(b) to correct the name of the assignee on the front page of the above-identified patent by way of a certificate of correction.

The request is **GRANTED**.

Petitioner states that the correct assignee's name is "Tissue Banks International" and that the incorrect assignee's name was included on the Fee(s) Transmittal form PTOL-85(b) at the time of payment of the issue fee. Accordingly, petitioner requests that a certificate of correction be issued to reflect the correct assignee on the front page of the Letters Patent in the patent to be issued from the application.

Telephone inquiries concerning this decision may be directed to the JoAnne Burke at (571) 272-4584. Inquiries regarding the issuance of a certificate of correction should be directed to the Certificate of Correction Branch at (571) 272-4200.

The Certificates of Correction Branch will be notified of this decision granting the petition under 37 CFR 3.81(b) and directing issuance of the requested Certificate of Correction.

JoAnne Burke
Petitions Examiner
Office of Petitions

UNITED STATES PATENT AND TRADEMARK OFFICE

Commissioner for Patents
United States Patent and Trademark Office
P.O. Box 1450
Alexandria, VA 22313-1450
www.uspto.gov

March 19, 2008

Bruce McCoy
One Kaiser Plaza
Ste. 750
Oakland, Ca 94612

Patent No.:D553,743S
Application No.: 29/245,930
Inventor(s): Ilwhan Park
Issued: December 29, 2005
Title: **Cervical Lumbar Interbody Fusion Implant**

Re: Request for Certificate of Correction

Consideration has been given your request for the issuance of a certificate of correction for the above-identified patent under the provisions of Rule(s) 1.322 and/or 1.323.

Assignees' names and addresses (assignment data) printed in a patent, are based *solely* on information supplied in the appropriate space for identifying the assignment data, i.e., item 3 of the Issue Fee Transmittal Form PTOL-85B. Granting of a request under 37 CFR 3.81(b) is required to correct applicant's error providing ***incorrect or erroneous*** assignment data, *before* issuance of a Certificate of Correction, under 37 CFR 1.323 *(see Manual of Patent Examining Procedures (M.P.E.P) Chp.1400, sect. 1481).* This procedure is required *at any time after the issue fee is paid*, including after issuance of the patent.

In view of the foregoing, your request, in this matter, is hereby denied.

A request to correct the Assignee under 37 CFR 3.81(b) should include:

A. **the processing fee set forth in 37 CFR 1.117(h) (currently $130);**
B. a statement that the failure to include the correct assignee name on the PTOL-85B was inadvertent; and
C. a copy of the Notice of Recordation of Assignment Document, reflecting the reel and frame number where the assignment(s) is recorded and/or reflecting proof of *the date* the assignment was submitted for recordation.

In the Request, Applicant(s) may request that the file be forwarded to Certificates of Correction Branch, for issuance of a Certificate of Correction, if the Request is granted.

Any request under 37 CFR 3.81(b) should be directed to the following address or facsimile number:

By mail:	Mail Stop PETITIONS Commissioner for Patents Post Office Box 1450 Alexandria, VA 22313-1450
By hand:	Customer Service Window Mail Stop Petitions Randolph Building 401 Dulany Street Alexandria, VA 22314
By fax:	(571) 273-0025 ATTN: Office of Petitions

Delora Dillard
For Mary Diggs, Supervisor
Decisions & Certificate of Correction Branch
(703) 305-8309 or (703) **308-9250 ext 172**

dd

UNITED STATES PATENT AND TRADEMARK OFFICE

Commissioner for Patents
United States Patent and Trademark Office
P.O. Box 1450
Alexandria, VA 22313-1450
www.uspto.gov

BRUCE & MCCOY
ONE KAISER PLAZA
STE. 750
OAKLAND CA 94612

MAILED

JAN 14 2010

OFFICE OF PETITIONS

In re Patent No. D553,743 :
Issue Date: October 23, 2007 :
Application No. 29/245,930 : ON PETITION
Filed: December 29, 2005 :
Attorney Docket No. 2523.004 :

This is a decision on the petition filed November 10, 2008, which is being treated as a petition under 37 CFR 3.81(b) to correct the name of the assignee on the front page of the above-identified patent by way of a certificate of correction.

The petition is **DISMISSED**.

Petitioner requests to correct the assignee's name by way of a certificate of correction in the name of "TBI"

37 CFR 3.81(b), effective June 25, 2004, reads:

> *After payment of the issue fee:* Any request for issuance of an application in the name of the assignee submitted after the date of payment of the issue fee, and any request for a patent to be corrected to state the name of the assignee, must state that the assignment was submitted for recordation as set forth in § 3.11 **before issuance of the patent**, and must include a request for a certificate of correction under § 1.323 of this chapter (accompanied by the fee set forth in § 1.20(a) and the processing fee set forth in § 1.17(i) of this chapter [emphasis added]. *See also* MPEP 1481.01.

U.S. Patent and Trademark Office assignment records disclose that an assignment from Reel/Frame: 017453/0044 recorded on January 12, 2006, shows the name as "Tissue Banks International" not "TBI". Accordingly, since the assignment does not show the assignee as "TBI" a certificate of correction would not be proper.

It is also noted that the request under 37 CFR 3.81(b) was not accompanied by a request for a certificate of correction (and fee) as required by 3.81(b). *See also* MPEP 1481.01. As petitioner has failed to comply with the provisions of 37 CFR 3.81(b), the request cannot be granted at this time.

Telephone inquiries concerning this decision on petition should be directed to undersigned at (571) 272-4584.

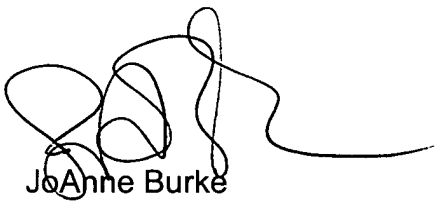

JoAnne Burke
Petitions Examiner
Office of Petitions

UNITED STATES PATENT AND TRADEMARK OFFICE

Commissioner for Patents
United States Patent and Trademark Office
P.O. Box 1450
Alexandria, VA 22313-1450
www.uspto.gov

BRUCE & MCCOY
ONE KAISER PLAZA
STE. 750
OAKLAND CA 94612

MAILED

MAR 2 9 2010

OFFICE OF PETITIONS

In re Patent No. D553,743 :
Issue Date: October 23, 2007 :
Application No. 29/245,930 : ON PETITION
Filed: December 29, 2005 :
Attorney Docket No. 2523.004 :

This is a decision on the petition filed February 16, 2010, which is being treated as a petition under 37 CFR 3.81(b) to correct the name of the assignee on the front page of the above-identified patent by way of a certificate of correction.

The request is **GRANTED**.

Petitioner states that the correct assignee's name is "Tissue Banks International" and that the incorrect assignee's name was included on the Fee(s) Transmittal form PTOL-85(b) at the time of payment of the issue fee. Accordingly, petitioner requests that a certificate of correction be issued to reflect the correct assignee on the front page of the Letters Patent in the patent to be issued from the application.

Telephone inquiries concerning this decision may be directed to the JoAnne Burke at (571) 272-4584. Inquiries regarding the issuance of a certificate of correction should be directed to the Certificate of Correction Branch at (571) 272-4200.

The Certificates of Correction Branch will be notified of this decision granting the petition under 37 CFR 3.81(b) and directing issuance of the requested Certificate of Correction.

JoAnne Burke
Petitions Examiner
Office of Petitions

UNITED STATES PATENT AND TRADEMARK OFFICE

Commissioner for Patents
United States Patent and Trademark Office
P.O. Box 1450
Alexandria, VA 22313-1450
www.uspto.gov

March 19, 2008

Bruce McCoy
One Kaiser Plaza
Ste. 750
Oakland, Ca 94612

Patent No.:D553,744S
Application No.: 29/245,931
Inventor(s): Ilwhan Park
Issued: December 29, 2005
Title: **Posterior Lumbar Interbody Fusion Implant**

Re: Request for Certificate of Correction

Consideration has been given your request for the issuance of a certificate of correction for the above-identified patent under the provisions of Rule(s) 1.322 and/or 1.323.

Assignees' names and addresses (assignment data) printed in a patent, are based *solely* on information supplied in the appropriate space for identifying the assignment data, i.e., item 3 of the Issue Fee Transmittal Form PTOL-85B. Granting of a request under 37 CFR 3.81(b) is required to correct applicant's error providing ***incorrect or erroneous*** assignment data, *before* issuance of a Certificate of Correction, under 37 CFR 1.323 *(see Manual of Patent Examining Procedures (M.P.E.P) Chp.1400, sect. 1481).* This procedure is required *at any time after the issue fee is paid*, including after issuance of the patent.

In view of the foregoing, your request, in this matter, is hereby denied.

A request to correct the Assignee under 37 CFR 3.81(b) should include:

A. **the processing fee set forth in 37 CFR 1.117(h) (currently $130);**
B. a statement that the failure to include the correct assignee name on the PTOL-85B was inadvertent; and
C. a copy of the Notice of Recordation of Assignment Document, reflecting the reel and frame number where the assignment(s) is recorded and/or reflecting proof of *the date* the assignment was submitted for recordation.

In the Request, Applicant(s) may request that the file be forwarded to Certificates of Correction Branch, for issuance of a Certificate of Correction, if the Request is granted.

Any request under 37 CFR 3.81(b) should be directed to the following address or facsimile number:

By mail:	Mail Stop PETITIONS Commissioner for Patents Post Office Box 1450 Alexandria, VA 22313-1450
By hand:	Customer Service Window Mail Stop Petitions Randolph Building 401 Dulany Street Alexandria, VA 22314
By fax:	(571) 273-0025 ATTN: Office of Petitions

Delora Dillard
For Mary Diggs, Supervisor
Decisions & Certificate of Correction Branch
(703) 305-8309 or (703) **308-9250 ext 172**

dd

UNITED STATES PATENT AND TRADEMARK OFFICE

Commissioner for Patents
United States Patent and Trademark Office
P.O. Box 1450
Alexandria, VA 22313-1450
www.uspto.gov

BRUCE & MCCOY
ONE KAISER PLAZA
STE. 750
OAKLAND CA 94612

MAILED

JAN 14 2010

OFFICE OF PETITIONS

In re Patent No. D553,744 :
Issue Date: October 23, 2007 :
Application No. 29/245,931 : ON PETITION
Filed: December 29, 2005 :
Attorney Docket No. 2523.004 :

This is a decision on the petition filed November 10, 2008, which is being treated as a petition under 37 CFR 3.81(b) to correct the name of the assignee on the front page of the above-identified patent by way of a certificate of correction.

The petition is **DISMISSED**.

Petitioner requests to correct the assignee's name by way of a certificate of correction in the name of "TBI"

37 CFR 3.81(b), effective June 25, 2004, reads:

> *After payment of the issue fee:* Any request for issuance of an application in the name of the assignee submitted after the date of payment of the issue fee, and any request for a patent to be corrected to state the name of the assignee, must state that the assignment was submitted for recordation as set forth in § 3.11 **before issuance of the patent**, and must include a request for a certificate of correction under § 1.323 of this chapter (accompanied by the fee set forth in § 1.20(a) and the processing fee set forth in § 1.17(i) of this chapter [emphasis added]. *See also* MPEP 1481.01.

U.S. Patent and Trademark Office assignment records disclose that an assignment from Reel/Frame: 017440/0580 recorded on January 12, 2006, shows the name as "Tissue Banks International" not "TBI". Accordingly, since the assignment does not show the assignee as "TBI" a certificate of correction would not be proper.

It is also noted that the request under 37 CFR 3.81(b) was not accompanied by a request for a certificate of correction (and fee) as required by 3.81(b). *See also* MPEP 1481.01. As petitioner has failed to comply with the provisions of 37 CFR 3.81(b), the request cannot be granted at this time.

Telephone inquiries concerning this decision on petition should be directed to undersigned at (571) 272-4584.

JoAnne Burke
Petitions Examiner
Office of Petitions

UNITED STATES PATENT AND TRADEMARK OFFICE

Commissioner for Patents
United States Patent and Trademark Office
P.O. Box 1450
Alexandria, VA 22313-1450
www.uspto.gov

MAILED

MAR 29 2010

OFFICE OF PETITIONS

BRUCE & MCCOY
ONE KAISER PLAZA
STE. 750
OAKLAND CA 94612

In re Patent No. D553,744 :
Issue Date: October 23, 2007 :
Application No. 29/245,931 : ON PETITION
Filed: December 29, 2005 :
Attorney Docket No. 2523.004 :

This is a decision on the petition filed February 17, 2010, which is being treated as a petition under 37 CFR 3.81(b) to correct the name of the assignee on the front page of the above-identified patent by way of a certificate of correction.

The request is **GRANTED**.

Petitioner states that the correct assignee's name is "Tissue Banks International" and that the incorrect assignee's name was included on the Fee(s) Transmittal form PTOL-85(b) at the time of payment of the issue fee. Accordingly, petitioner requests that a certificate of correction be issued to reflect the correct assignee on the front page of the Letters Patent in the patent to be issued from the application.

Telephone inquiries concerning this decision may be directed to the JoAnne Burke at (571) 272-4584. Inquiries regarding the issuance of a certificate of correction should be directed to the Certificate of Correction Branch at (571) 272-4200.

The Certificates of Correction Branch will be notified of this decision granting the petition under 37 CFR 3.81(b) and directing issuance of the requested Certificate of Correction.

JoAnne Burke
Petitions Examiner
Office of Petitions

UNITED STATES PATENT AND TRADEMARK OFFICE

Commissioner for Patents
United States Patent and Trademark Office
P.O. Box 1450
Alexandria, VA 22313-1450
www.uspto.gov

March 19, 2008

Bruce McCoy
One Kaiser Plaza
Ste. 750
Oakland, Ca 94612

Patent No.:D553,745S
Application No.: 29/245,932
Inventor(s): Ilwhan Park
Issued: December 29, 2005
Title: **Transforaminal Lumbar Interbody Fusion Implant**

Re: Request for Certificate of Correction

Consideration has been given your request for the issuance of a certificate of correction for the above-identified patent under the provisions of Rule(s) 1.322 and/or 1.323.

Assignees' names and addresses (assignment data) printed in a patent, are based *solely* on information supplied in the appropriate space for identifying the assignment data, i.e., item 3 of the Issue Fee Transmittal Form PTOL-85B. Granting of a request under 37 CFR 3.81(b) is required to correct applicant's error providing ***incorrect or erroneous*** assignment data, *before* issuance of a Certificate of Correction, under 37 CFR 1.323 *(see Manual of Patent Examining Procedures (M.P.E.P) Chp.1400, sect. 1481).* This procedure is required *at any time after the issue fee is paid*, including after issuance of the patent.

In view of the foregoing, your request, in this matter, is hereby denied.

A request to correct the Assignee under 37 CFR 3.81(b) should include:

A. **the processing fee set forth in 37 CFR 1.117(h) (currently $130);**
B. a statement that the failure to include the correct assignee name on the PTOL-85B was inadvertent; and
C. a copy of the Notice of Recordation of Assignment Document, reflecting the reel and frame number where the assignment(s) is recorded and/or reflecting proof of *the date* the assignment was submitted for recordation.

In the Request, Applicant(s) may request that the file be forwarded to Certificates of Correction Branch, for issuance of a Certificate of Correction, if the Request is granted.

Any request under 37 CFR 3.81(b) should be directed to the following address or facsimile number:

By mail:	Mail Stop PETITIONS Commissioner for Patents Post Office Box 1450 Alexandria, VA 22313-1450
By hand:	Customer Service Window Mail Stop Petitions Randolph Building 401 Dulany Street Alexandria, VA 22314
By fax:	(571) 273-0025 ATTN: Office of Petitions

Delora Dillard
For Mary Diggs, Supervisor
Decisions & Certificate of Correction Branch
(703) 305-8309 or (703) **308-9250 ext 172**

dd

UNITED STATES PATENT AND TRADEMARK OFFICE

Commissioner for Patents
United States Patent and Trademark Office
P.O. Box 1450
Alexandria, VA 22313-1450
www.uspto.gov

BRUCE & MCCOY
ONE KAISER PLAZA
STE. 750
OAKLAND CA 94612

MAILED

JAN 14 2010

OFFICE OF PETITIONS

In re Patent No. D553,745 :
Issue Date: October 23, 2007 :
Application No. 29/245,932 : ON PETITION
Filed: December 29, 2005 :
Attorney Docket No. 2523.006 :

This is a decision on the petition filed November 10, 2008, which is being treated as a petition under 37 CFR 3.81(b) to correct the name of the assignee on the front page of the above-identified patent by way of a certificate of correction.

The petition is **DISMISSED**.

Petitioner requests to correct the assignee's name by way of a certificate of correction in the name of "TBI"

37 CFR 3.81(b), effective June 25, 2004, reads:

> *After payment of the issue fee:* Any request for issuance of an application in the name of the assignee submitted after the date of payment of the issue fee, and any request for a patent to be corrected to state the name of the assignee, must state that the assignment was submitted for recordation as set forth in § 3.11 **before issuance of the patent**, and must include a request for a certificate of correction under § 1.323 of this chapter (accompanied by the fee set forth in § 1.20(a) and the processing fee set forth in § 1.17(i) of this chapter [emphasis added]. *See also* MPEP 1481.01.

U.S. Patent and Trademark Office assignment records disclose that an assignment from Reel/Frame: 017415/073 recorded on January 12, 2006, shows the name as "Tissue Banks International" not "TBI". Accordingly, since the assignment does not show the assignee as "TBI" a certificate of correction would not be proper.

It is also noted that the request under 37 CFR 3.81(b) was not accompanied by a request for a certificate of correction (and fee) as required by 3.81(b). *See also* MPEP 1481.01. As petitioner has failed to comply with the provisions of 37 CFR 3.81(b), the request cannot be granted at this time.

Telephone inquiries concerning this decision on petition should be directed to undersigned at (571) 272-4584.

JoAnne Burke
Petitions Examiner
Office of Petitions

UNITED STATES PATENT AND TRADEMARK OFFICE

Commissioner for Patents
United States Patent and Trademark Office
P.O. Box 1450
Alexandria, VA 22313-1450
www.uspto.gov

BRUCE & MCCOY
ONE KAISER PLAZA
STE. 750
OAKLAND CA 94612

MAILED

MAR 3 1 2010

OFFICE OF PETITIONS

ON PETITION

In re Patent No. D553,745 :
Issue Date: October 23, 2007 :
Application No. 29/245,932 :
Filed: December 29, 2005 :
Attorney Docket No. 2523.006 :

This is a decision on the renewed petition filed February 18, 2010, which is being treated as a petition under 37 CFR 3.81(b) to correct the name of the assignee on the front page of the above-identified patent by way of a certificate of correction.

The request is **GRANTED**.

Petitioner states that the correct assignee's name is "Tissue Banks International" and that the incorrect assignee's name was included on the Fee(s) Transmittal form PTOL-85(b) at the time of payment of the issue fee. Accordingly, petitioner requests that a certificate of correction be issued to reflect the correct assignee on the front page of the Letters Patent in the patent to be issued from the application.

Telephone inquiries concerning this decision may be directed to the JoAnne Burke at (571) 272-4584. Inquiries regarding the issuance of a certificate of correction should be directed to the Certificate of Correction Branch at (571) 272-4200.

The Certificates of Correction Branch will be notified of this decision granting the petition under 37 CFR 3.81(b) and directing issuance of the requested Certificate of Correction.

JoAnne Burke
Petitions Examiner
Office of Petitions

UNITED STATES PATENT AND TRADEMARK OFFICE

Commissioner for Patents
United States Patent and Trademark Office
P.O. Box 1450
Alexandria, VA 22313-1450
www.uspto.gov

INTELLECTUAL PROPERTY GROUP
FREDRIKSON & BYRON, P.A.
200 SOUTH SIXTH STREET, SUITE 4000
MINNEAPOLIS, MN 55402

COPY MAILED

DEC 18 2007

OFFICE OF PETITIONS

In re Application of :
Mitchell I. Kieffer et al :
Application No. 29/245,960 : DECISION ON PETITION
Filed: December 30, 2005 :
Attorney Docket No. 45673.2.4 :

This is a decision on the petition under the unintentional provisions of 37 CFR 1.137(b), filed September 7, 2007, to revive the above-identified application.

The petition is **DISMISSED**.

Any request for reconsideration of this decision must be submitted within TWO (2) MONTHS from the mail date of this decision. Extensions of time under 37 CFR 1.136(a) are permitted. The reconsideration request should include a cover letter entitled "Renewed Petition under 37 CFR 1.137(b)." This is **not** a final agency action within the meaning of 5 U.S.C. § 704.

This application became abandoned for failure to timely pay the issue fee on or before December 5, 2006, as required by the Notice of Allowance and Fee(s) Due (Notice), mailed September 5, 2006. Additionally, the Notice of Allowability mailed on September 5, 2006 required the submission of corrected drawings. Prior to the due date for payment of the issue fee, a Request for Continued Examination (RCE) under 37 CFR 1.114 was filed. However, because the provisions of 37 CFR 1.114 do not apply to a design application, a Notice of Improper Request for Continued Examination was mailed on July 24, 2007.[1] Accordingly, this application became abandoned for failure to timely pay the issue fee on or before December 5, 2006.

[1] As requested, the improper $395 RCE fee paid on November 16, 2006 will be refunded to petitioner's credit card.

A grantable petition under 37 CFR 1.137(b) must be accompanied by: (1) the required reply, unless previously filed; (2) the petition fee as set forth in 37 CFR 1.17(m); (3) a statement that the entire delay in filing the required reply from the due date for the reply until the filing of a grantable petition pursuant to 37 CFR 1.137(b) was unintentional; and (4) any terminal disclaimer (and fee as set forth in 37 CFR 1.20(d)) required by 37 CFR 1.137(d). Where there is a question as to whether either the abandonment or the delay in filing a petition under 37 CFR 1.137 was unintentional, the Director may require additional information. *See* MPEP 711.03(c)(II)(C) and (D). The instant petition lacks item (4) above.

Since the above-identified application is a design application, 37 CFR 1.137(d) requires a terminal disclaimer dedicating to the public a terminal part of the term of any patent granted on the application or any patent granted on any continuing application that contains a specific reference under 35 U.S.C. 120, 121, or 365(c) to the application. The period to be disclaimed will be a terminal part of the patent to be granted equivalent to the period of abandonment. The period of abandonment will be computed to be the number of months from the date of abandonment to the date of filing a grantable petition. A terminal disclaimer fee of $65 is required. If the terminal disclaimer is signed by an assignee, the assignee must comply with the requirements of 37 CFR 3.73(b).

Further, in an application or patent, abandoned or lapsed for failure to pay the issue fee or any portion thereof, the required reply must be payment of the issue fee or any outstanding balance thereof. *See* MPEP 711.03(c)(II)(A)(1). Therefore, the filing of a continuation application under 37 CFR 1.53(d) is not a proper reply under 37 CFR 1.137(a)(1) or (b)(1). In view of the authorization to charge any additional fees due, the $400 issue fee will be charged to petitioner's deposit account. The issue fee is not refundable and may not be applied towards payment of the issue fee in the continuation application (in the event the continuation application is allowed).

Further correspondence with respect to this matter should be addressed as follows:

By Mail: Mail Stop PETITION
Commissioner for Patents
P. O. Box 1450
Alexandria, VA 22313-1450

By hand: U. S. Patent and Trademark Office
Customer Service Window, Mail Stop Petitions
Randolph Building
401 Dulany Street
Alexandria, VA 22314

The centralized facsimile number is **(571) 273-8300.**

Correspondence regarding this decision may also be filed through the electronic filing system of the USPTO.

Telephone inquiries concerning this decision should be directed to the undersigned at (571) 272-3218 or to the Office of Petitions Help Desk at (571) 272-3282 after January 3, 2008.

Frances Hicks
Petitions Examiner
Office of Petitions

UNITED STATES PATENT AND TRADEMARK OFFICE

Commissioner for Patents
United States Patent and Trademark Office
P.O. Box 1450
Alexandria, VA 22313-1450
www.uspto.gov

INTELLECTUAL PROPERTY GROUP
FREDRIKSON & BYRON, P.A.
200 SOUTH SIXTH STREET
SUITE 4000
MINNEAPOLIS MN 55402

COPY MAILED

MAY 2 0 2008

OFFICE OF PETITIONS

In re Application of :
Mitchell I. Kieffer et al :
Application No. 29/245,960 : ON PETITION
Filed: December 30, 2005 :
Attorney Docket No. 45673.2.9 :

This is a decision on the Renewed petition under 37 CFR 1.137(b), filed January 10, 2008, to revive the above-identified application.

The petition is **GRANTED**.

The above-identified application became abandoned for failure to pay the issue fee and provide corrected drawings in a timely manner in reply to the Notice of Allowance/Allowability mailed September 5, 2006, which set a statutory period for reply of three (3) months. Accordingly, by operation of law, the above-identified application became abandoned on December 6, 2006.

The petition decision mailed December 18, 2007 dismissed the petition filed September 7, 2007, noting that the requirements of 37 CFR 1.137(b)(4), a terminal disclaimer, was lacking.

The instant renewed petition includes a terminal disclaimer and fee.

The petition satisfies the conditions for revival pursuant to the provisions of 37 CFR 1.137(b) in that (1) the reply in the form of the issue fee and corrected drawings; (2) the petition fee of $750; (3) the required statement of unintentional delay; and (4) the terminal disclaimer and fee have been received. Accordingly, the issue fee and corrected drawings are accepted as having been unintentionally delayed.

Telephone inquiries concerning this decision should be directed to Carl Friedman at (571) 272-6842.

The application file is being referred to Technology Center Art Unit 2914 for processing of the Continued Prosecution Application request filed September 7, 2007.

Carl Friedman
Petitions Examiner
Office of Petitions

UNITED STATES PATENT AND TRADEMARK OFFICE

Commissioner for Patents
United States Patent and Trademark Office
P.O. Box 1450
Alexandria, VA 22313-1450
www.uspto.gov

INTELLECTUAL PROPERTY GROUP
FREDRIKSON & BYRON, P.A.
200 SOUTH SIXTH STREET, SUITE 4000
MINNEAPOLIS, MN 55402

COPY MAILED

APR 22 2009

OFFICE OF PETITIONS

In re Application of :
Mitchell I. **KIEFFER, et al.** :
Application No. 29/245,960 : DECISION ON PETITION
Filed: December 30, 2005 : UNDER 37 CFR 1.137(b)
Attorney Docket No. **45673.2.9** :

This is a decision on the petition under the unintentional provisions of 37 CFR 1.137(b), filed March 12, 2009, to revive the above-identified application.

The petition is **GRANTED**.

This application became abandoned for failure to timely pay the issue fee on or before December 30, 2008, as required by the Notice of Allowance and Fee(s) Due, mailed September 30, 2008. Accordingly, the date of abandonment of this application is December 31, 2008.

The petition satisfies the requirements of 37 CFR 1.137(b) in that petitioner has supplied (1) the reply in the form payment of the issue fee of $430, a terminal disclaimer and fee of $70, (2) the petition fee of $810; and (3) an adequate statement of unintentional delay.

The terminal disclaimer filed March 12, 2009 has been entered and made of record. Any continuing application filed from this application must contain a copy of the terminal disclaimer. The copy of the terminal disclaimer must be filed with a cover letter requesting the terminal disclaimer be recorded on the continuing application. A copy of this decision should be attached to the cover letter.

Telephone inquiries concerning this decision should be directed to Monica A. Graves at (571) 272-7253.

This application is being referred to the Office of Data Management for processing into a patent.

Brian W. Brown
Petitions Examiner
Office of Petitions

UNITED STATES PATENT AND TRADEMARK OFFICE

Commissioner for Patents
United States Patent and Trademark Office
P.O. Box 1450
Alexandria, VA 22313-1450
www.uspto.gov

ROBERT W. BECKER & ASSOCIATES
707 HITHWAY 333
SUITE B
TIJERAS, NM 87059-7507

COPY MAILED

NOV 01 2006

OFFICE OF PETITIONS

In re Application of :
Ulrich Gauffres :
Application No. 29/245,996 : DECISION ON PETITION
Filed: January 3, 2006 : TO MAKE SPECIAL UNDER
Attorney Docket No. GE/BE 050056US : 37 CFR 1.102(d)
:

This is a decision on the petition under 37 CFR §1.102(d), filed May 22, 2006, to make the above-identified application special based on actual infringement as set forth in M.P.E.P. § 708.02, Section II.

The petition is **GRANTED.**

A grantable petition to make an application special under 37 CFR §1.102(d) and MPEP §708.02, Section II: Infringement, must be accompanied by the required fee pursuant to 37 CFR 1.17(h) and a statement by the applicant, assignee, or attorney/agent registered to practice before the office alleging:

> (A) That there is an infringing device or product actually on the market or method in use;
>
> (B) That a rigid comparison of the alleged infringing device, product, or method with the claims of the application has been made, and that, in his or her opinion, some of the claims are unquestionably infringed; and
>
> (C) That he or she has made or caused to be made a careful and thorough search of the prior art or has a good knowledge of the pertinent prior art.
>
> Applicant must provide one copy of each of the references deemed most closely related to the subject matter encompassed by the claims if said references are not already of record.

The petition complies with all the above stated requirements. Accordingly, the above-identified application has been accorded "special" status.

Telephone inquiries concerning this decision should be directed to Irvin Dingle at 571-272-3210.

All other inquiries concerning either the examination or status of the application should be directed to the Technology Center.

The application is being forwarded to the Technology Center Art Unit 2913 for action on the merits commensurate with this decision.

David Bucci
Petitions Examiner
Office of Petitions

PTO/SB/27 (09-04)
Approved for use through 07/31/2006. OMB 0651-0031
U.S. Patent and Trademark Office; U.S. DEPARTMENT OF COMMERCE
Under the Paperwork Reduction Act of 1995, no persons are required to respond to a collection of information unless it displays a valid OMB control number.

REQUEST FOR EXPEDITED EXAMINATION OF A DESIGN APPLICATION (37 CFR 1.155)		
	Application Number	TBA 29/246,003
	Filing Date	December 2, 2005
	First Named Inventor	Charles Cummins
	Title	User Interface For A Portion Of A Display Screen
	Atty Docket Number	013797.01685

ADDRESS TO:
MAIL STOP EXPEDITED DESIGN
COMMISSIONER FOR PATENTS
P.O. Box 1450
Alexandria, VA 22313-1450

This is a request for expedited examination of a design application under 37 CFR 1.155.

NOTE: If the Request made by this form accompanies original application papers, include form PTO/SB/18 "Design Patent Application Transmittal" or its equivalent.

A preexamination search was conducted. The field of search was:

Class D14 (subclasses 485, 486, 487, 488, 489, 490, 491, 492, 493, 494, 495); Class 345 (subclasses 683, 902), Class 715 (subclasses 700, 762-768, 779-781, 783, 790, 797, 810)

Related applications: 29/237,949 filed 9/9/05

If not previously filed for the above-identified application, the following items required by 37 CFR 1.155 are enclosed:
Formal drawings (see 37 CFR 1.84).
The fee set forth in 37 CFR 1.17(k).
An information disclosure statement in compliance with 37 CFR 1.98.

5-5-06
Approved
Jacqueline M. Stone, Director
Technology Center 1700/2900

/Ross Dannenberg/	December 2, 2005
Signature	Date
Ross A. Dannenberg	49,024
Typed or printed name	Registration Number, if applicable
(202) 824-3000	
Telephone Number	

WARNING: Information on this form may become public. Credit card information should not be included on this form. Provide credit card information and authorization on PTO-2038.

This collection of information is required by 37 CFR 1.155. The information is required to obtain or retain a benefit by the public which is to file (and by the USPTO to process) an application. Confidentiality is governed by 35 U.S.C. 122 and 37 CFR 1.11 and 1.14. This collection is estimated to take 6 minutes to complete, including gathering, preparing, and submitting the completed application form to the USPTO. Time will vary depending upon the individual case. Any comments on the amount of time you require to complete this form and/or suggestions for reducing this burden, should be sent to the Chief Information Officer, U.S. Patent and Trademark Office, U.S. Department of Commerce, P.O. Box 1450, Alexandria, VA 22313-1450. DO NOT SEND FEES OR COMPLETED FORMS TO THIS ADDRESS. **SEND TO: Mail Stop Expedited Design, Commissioner for Patents, P.O. Box 1450, Alexandria, VA 22313-1450.**
If you need assistance in completing the form, call 1-800-PTO-9199 and select option 2.

UNITED STATES PATENT AND TRADEMARK OFFICE

Commissioner for Patents
United States Patent and Trademark Office
P.O. Box 1450
Alexandria, VA 22313-1450
www.uspto.gov

COPY MAILED

MAY 23 2008

OFFICE OF PETITIONS

FISH & RICHARDSON P.C.
P.O. BOX 1022
MINNEAPOLIS, MN 55440-1022

In re Patent No. D538,505
Application No. 29/246,009
Filing Date: December 15, 2005
Issue Date: March 13, 2007
Attorney Docket No. 19108-007001/2005-FDO-01

DECISION GRANTING PETITION

This is a decision on the petition under 37 CFR 1.182, filed April 15, 2008, requesting issuance of duplicate Letters of Patent for the above-identified patent.

The petition is **granted**.

The file record discloses that the above-cited application matured into U.S. Patent No. D538,505 onMarch 13, 2007. Petitioner contends, however, that the patent was received but destroyed thereafter.

In view of the facts set forth in the petition, it is concluded that the original Letters of Patent was destroyed after receipt. The Office of Data Management is directed to issue duplicate Letters of Patent.

Any questions concerning this decision may be directed to the undersigned at (571)272-3222. Any questions concerning issuance of the duplicate Letter of Patent should be directed to Niomi Farmer, Office of Data Management at (703) 308-9250 extension 129.

A copy of this decision is being forwarded to the Office of Data Management for issuance of a duplicate Letter of Patent.

Kenya A. McLaughlin
Petitions Attorney
Office of Petitions

cc: Niomi Farmer—Office of Data Management FAX: 571-270-9753

UNITED STATES PATENT AND TRADEMARK OFFICE

Commissioner for Patents
United States Patent and Trademark Office
P.O. Box 1450
Alexandria, VA 22313-1450
www.uspto.gov

JJGJR.: 08-07

Paper No: __

COPY MAILED

AUG 0 6 2007

OFFICE OF PETITIONS

WHIRLPOOL
PATENTS COMPANY - MD 0750
500 RENAISSANCE DRIVE - SUITE 102
ST. JOSEPH MI 49085

In re Application of :
Pino, et al. :
Application No. 29/246,047 : ON PETITION
Filed: 8 January, 2006 :
Attorney Docket No. US20050554 :

This is a decision on the petition filed on 9 April, 2007, under 37 C.F.R. §1.47.

The Office regrets the delay in addressing this matter, however, the instant petition was presented to the attorneys in the Office of Petitions only at this writing.

For the reasons set forth below, the petition under 37 C.F.R. §1.47(a) is **GRANTED**.

BACKGROUND

The record indicates:

- the instant application was filed on 8 January, 2006, without, *inter alia*, a fully executed oath/declaration;

- on 9 January, 2007, the Examiner mailed with the Notice of Allowance/Allowability and Fees Due a requirement, *inter alia*, that a fully executed oath/declaration (signed and dated) was required;

- on 9 April, 2007, Petitioner Tara M. Hartman (Reg. No 58,805) filed, *inter alia*, the petition, her statement of the last known/reasonably believed-current mailing address of the non-signing co-inventor Giovanni Pino (Mr. Pino), and statement (with a copy of the letter) in support of the requirement to transmit the entire application (description, claims, abstract and drawings) was sent to non-signing co-inventor Mr. Pino by overnight courier at his last known/current address and delivered and that he has not responded; also an oath/declaration executed by co-inventor Rossetto for himself and on behalf of the non-signing co-inventor Mr. Pino, all in satisfaction of the statutory and regulatory requirements.

Out of an abundance of caution, Petitioners always are reminded that those registered to practice *and* all others who make representations before the Office are reminded to inquire into the underlying facts of representations made to the Office and support averments with the appropriate documentation–since all owe to the Office the continuing duty to disclose.[1]

---

[1] See supplement of 17 June, 1999. The Patent and Trademark Office is relying on petitioner's duty of candor and good faith and accepting a statement made by Petitioner. See Changes to Patent Practice and Procedure, 62 Fed. Reg. at 53160 and 53178, 1203 Off. Gaz. Pat. Office at 88 and 103 (responses to comments 64 and 109)(applicant obligated under 37 C.F.R. §10.18 to inquire into the underlying facts and circumstances when providing statements to the Patent and Trademark Office).

Specifically, the regulations at 37 C.F.R. §10.18 provide:

§ 10.18 Signature and certificate for correspondence filed in the Patent and Trademark Office.
(a) For all documents filed in the Office in patent, trademark, and other non-patent matters, except for correspondence that is required to be signed by the applicant or party, each piece of correspondence filed by a practitioner in the Patent and Trademark Office must bear a signature by such practitioner complying with the provisions of §1.4(d), §1.4(e), or § 2.193(c)(1) of this chapter.
(b) By presenting to the Office (whether by signing, filing, submitting, or later advocating) any paper, the party presenting such paper, whether a practitioner or non-practitioner, is certifying that—

(1) All statements made therein of the party's own knowledge are true, all statements made therein on information and belief are believed to be true, and all statements made therein are made with the knowledge that whoever, in any matter within the jurisdiction of the Patent and Trademark Office, knowingly and willfully falsifies, conceals, or covers up by any trick, scheme, or device a material fact, or makes any false, fictitious or fraudulent statements or representations, or makes or uses any false writing or document knowing the same to contain any false, fictitious or fraudulent statement or entry, shall be subject to the penalties set forth under 18 U.S.C. 1001, and that violations of this paragraph may jeopardize the validity of the application or document, or the validity or enforceability of any patent, trademark registration, or certificate resulting therefrom; and

(2) To the best of the party's knowledge, information and belief, formed after an inquiry reasonable under the circumstances, that —

(i) The paper is not being presented for any improper purpose, such as to harass someone or to cause unnecessary delay or needless increase in the cost of prosecution before the Office;

(ii) The claims and other legal contentions therein are warranted by existing law or by a nonfrivolous argument for the extension, modification, or reversal of existing law or the establishment of new law;

(iii) The allegations and other factual contentions have evidentiary support or, if specifically so identified, are likely to have evidentiary support after a reasonable opportunity for further investigation or discovery; and

(iv) The denials of factual contentions are warranted on the evidence, or if specifically so identified, are reasonably based on a lack of information or belief.

(c) Violations of paragraph (b)(1) of this section by a practitioner or non-practitioner may jeopardize the validity of the application or document, or the validity or enforceability of any patent, trademark registration, or certificate resulting therefrom. Violations of any of paragraphs (b)(2)(i) through (iv) of this section are, after notice and reasonable opportunity to respond, subject to such sanctions as deemed appropriate by the Commissioner, or the Commissioner's designee, which may include, but are not limited to, any combination of —

(1) Holding certain facts to have been established;
(2) Returning papers;
(3) Precluding a party from filing a paper, or presenting or contesting an issue;
(4) Imposing a monetary sanction;
(5) Requiring a terminal disclaimer for the period of the delay; or
(6) Terminating the proceedings in the Patent and Trademark Office.

This application and its papers have been reviewed and found in compliance with 37 C.F.R. §1.47(a).

This application hereby is **ACCORDED status under 37 C.F.R. §1.47(a)**.

As provided under 37 C.F.R. §1.47(a), the Office will forward notice of this application's filing to the non-signing inventor at the address given in the petition.

Notice of the filing of this application also will be published in the Official Gazette.

This file is being released to OIPE for processing as necessary to reflect the instant decision before being released for further processing in due course.

While telephone inquiries regarding this decision may be directed to the undersigned at (571) 272-3214, it is noted that all practice before the Office is in writing (see: 37 C.F.R. §1.2[2]) and the proper authority for action on any matter in this regard are the statutes (35 U.S.C.), regulations (37 C.F.R.) and the commentary on policy (MPEP). Therefore, no telephone discussion may be controlling or considered authority for Petitioner's/Caller's action(s).

John J. Gillon, Jr.
Senior Attorney
Office of Petitions

(d) Any practitioner violating the provisions of this section may also be subject to disciplinary action. See § 10.23(c)(15).
[Added 50 FR 5175, Feb. 6, 1985, effective Mar. 8, 1985; para. (a) revised, 58 FR 54494, Oct. 22, 1993, effective Nov. 22, 1993; paras. (a) & (b) revised, paras. (c) & (d) added, 62 FR 53131, Oct. 10, 1997, effective Dec. 1, 1997; para. (a) revised, 69 FR 56481, Sept. 21, 2004, effective Oct. 21, 2004]

[2] The regulations at 37 C.F.R. §1.2 provide:
§1.2 Business to be transacted in writing.
All business with the Patent and Trademark Office should be transacted in writing.The personal attendance of applicants or their attorneys or agents at the Patent and Trademark Office is unnecessary. The action of the Patent and Trademark Office will be based exclusively on the written record in the Office. No attention will be paid to any alleged oral promise, stipulation,or understanding in relation to which there is disagreement or doubt.

UNITED STATES PATENT AND TRADEMARK OFFICE

Commissioner for Patents
United States Patent and Trademark Office
P.O. Box 1450
Alexandria, VA 22313-1450
www.uspto.gov

JJGJR.: 08-07

Paper No: __

COPY MAILED

AUG 0 6 2007

OFFICE OF PETITIONS

GIOVANNI PINO
4974 NORTH CITATION DRIVE/APT. 205
DELRAY BEACH, FL 33445

In re Application of :
Pino, et al. :
Application No. 29/246,047 : CORRESPONDENCE
Filed: 8 January, 2006 :
Attorney Docket No. US20050554 :

Dear Giovanni Pino:

You are named as inventor in the above identified United States patent application, filed under the provisions of 35 U.S.C. §116 (United States Code), and 37 C.F.R. §1.47,[1] ¶a, Rules of Practice in Patent Cases. Should a patent be granted on the application you will be designated therein as inventor.

---

[1] The regulations at 37 C.F.R. §1.47 provide:

§ 1.47 Filing when an inventor refuses to sign or cannot be reached.

(a) If a joint inventor refuses to join in an application for patent or cannot be found or reached after diligent effort, the application may be made by the other inventor on behalf of himself or herself and the nonsigning inventor. The oath or declaration in such an application must be accompanied by a petition including proof of the pertinent facts, the fee set forth in §1.17(h), and the last known address of the nonsigning inventor. The nonsigning inventor may subsequently join in the application by filing an oath or declaration complying with §1.63.

(b) Whenever all of the inventors refuse to execute an application for patent, or cannot be found or reached after diligent effort, a person to whom an inventor has assigned or agreed in writing to assign the invention, or who otherwise shows sufficient proprietary interest in the matter justifying such action, may make application for patent on behalf of and as agent for all the inventors. The oath or declaration in such an application must be accompanied by a petition including proof of the pertinent facts, a showing that such action is necessary to preserve the rights of the parties or to prevent irreparable damage, the fee set forth in §1.17(h), and the last known address of all of the inventors. An inventor may subsequently join in the application by filing an oath or declaration complying with §1.63.

© The Office will send notice of the filing of the application to all inventors who have not joined in the application at the address(es) provided in the petition under this section, and publish notice of the filing of the application in the *Official Gazette*. The Office may dispense with this notice provision in a continuation or divisional application, if notice regarding the filing of the prior application was given to the nonsigning inventor(s).

[47 Fed. Reg. 41275, Sept. 17, 1982, effective Oct. 1, 1982; 48 Fed. Reg. 2709, Jan. 20, 1983, effective Feb. 27, 1983; revised, 62 Fed. Reg. 53131, Oct. 10, 1997, effective Dec. 1, 1997; revised, 65 Fed. Reg. 54604, Sept. 8, 2000, effective Nov. 7, 2000]

As a named inventor you are entitled to inspect any paper in the file wrapper of the application, order copies of all or any part thereof (at a prepaid cost per 37 C.F.R. §1.19) or make your position of record in the application. Alternatively, you may arrange to do any of the preceding through a registered patent attorney or agent presenting written authorization from you. If you care to join the application, counsel of record (see below) would presumably assist you. Joining in the application would entail the filing of an appropriate oath or declaration by you pursuant to 37 C.F.R. §1.63.

Requests for information regarding your application should be directed to the File Information Unit at (703) 308-2733.

Information regarding how to pay for and order a copy of the application, or a specific paper in the application, should be directed to Certification Division at (703) 308-9726 or toll-free: (800) 972-6382 (outside the Washington D.C. area).

While telephone inquiries regarding this decision may be directed to the undersigned at (571) 272-3214, it is noted that all practice before the Office is in writing (see: 37 C.F.R. §1.2[2]) and the proper authority for action on any matter in this regard are the statutes (35 U.S.C.), regulations (37 C.F.R.) and the commentary on policy (MPEP). Therefore, no telephone discussion may be controlling or considered authority for Petitioner's/Caller's action(s).

John J. Gillon, Jr.
Senior Attorney
Office of Petitions

Counsel of Record:
WHIRLPOOL
PATENTS COMPANY - MD 0750
500 RENAISSANCE DRIVE - SUITE 102
ST. JOSEPH MI 49085

---

[2] The regulations at 37 C.F.R. §1.2 provide:

§1.2 Business to be transacted in writing.

All business with the Patent and Trademark Office should be transacted in writing.The personal attendance of applicants or their attorneys or agents at the Patent and Trademark Office is unnecessary. The action of the Patent and Trademark Office will be based exclusively on the written record in the Office. No attention will be paid to any alleged oral promise, stipulation,or understanding in relation to which there is disagreement or doubt.

UNITED STATES PATENT AND TRADEMARK OFFICE

Commissioner for Patents
United States Patent and Trademark Office
P.O. Box 1450
Alexandria, VA 22313-1450
www.uspto.gov

WOOD, HERRON & EVANS, LLP
2700 CAREW TOWER
441 VINE STREET
CINCINNATI OH 45202

COPY MAILED

JUL 19 2006

OFFICE OF PETITIONS

In re Application of	:	
Getgey et al.	:	
Application No. 29/246,072	:	ON PETITION
Filed: January 20, 2006	:	
Attorney Docket No. GET/07C	:	

This is a decision on the petition under 37 CFR 1.102(c)(1), filed April 18, 2006, to make the above-identified application special based on applicant's age as set forth in M.P.E.P. § 708.02, Section IV.

The petition is **GRANTED**.

A grantable petition to make an application special under 37 CFR 1.102(c)(1) and MPEP § 708.02, Section IV: Applicant's Age must be accompanied by evidence showing that at least one of the applicants is 65 years of age, or more, such as a birth certificate or a statement by applicant. No fee is required.

The instant petition includes a Declaration from the applicant, William F. Getgey. Accordingly, the above-identified application has been accorded "special" status.

Telephone inquiries concerning this decision should be directed to the undersigned at 571-272-3206. All other inquiries concerning either the examination or status of the application should be directed to the Technology Center.

This matter is being referred to the Technology Center Art Unit 2913 for action on the merits commensurate with this decision.

Liana Chase
Petitions Examiner
Office of Petitions

UNITED STATES PATENT AND TRADEMARK OFFICE

Commissioner for Patents
United States Patent and Trademark Office
P.O. Box 1450
Alexandria, VA 22313-1450
www.uspto.gov

BARLOW, JOSEPHS & HOLMES, LTD.
101 DYER STREET
5TH FLOOR
PROVIDENCE RI 02903

COPY MAILED

DEC 20 2007

OFFICE OF PETITIONS

In re Application of	:	
Gregor Mittersinker et al.	:	
Application No. 29/246,073	:	ON PETITION
Filed: January 20, 2006	:	
Attorney Docket No. N5P1259US	:	

This is a decision on the petition under 37 CFR 1.137(b), filed November 27, 2007, to revive the above-identified application.

The petition is **GRANTED**.

The above-identified application became abandoned for failure to submit formal drawings in a timely manner in reply to the Notice of Allowance mailed June 14, 2007, which set a shortened statutory period for reply of three (3) months. Accordingly, by operation of law, the above-identified application became abandoned on September 15, 2007.

The petition satisfies the conditions for revival pursuant to the provisions of 37 CFR 1.137(b) in that (1) the reply in the form of formal drawings ; (2) the petition fee of $770; (3) the required statement of unintentional delay; and (4) a terminal disclaimer and fee as required by 37 CFR 1.137(d) have been received. Accordingly, the issue fee is accepted as having been unintentionally delayed.

The terminal disclaimer is accepted and has been made of record.

Telephone inquiries concerning this decision should be directed to Carl Friedman at (571) 272-6842.

The application file is being referred to the Office of Patent Publication.

David Bucci
Petitions Examiner
Office of Petitions

Pra tition r's Do ket No. GET-07D **PATENT**

IN THE UNITED STATES PATENT AND TRADEMARK OFFICE

In re application of: William F. Getgey, et al.

Application No.: 29/246,080 Group No.: 2913
Filed: January 27, 2006 Examiner:
For: HEAD AND NECK OF MOTORIZED FLOSSER

Mail Stop Petition
Commissioner for Patents
P.O. Box 1450
Alexandria, VA 22313-1450

PETITION GRANTED

William Krynski,
Special Program Examiner
Technology Center 1700

JUN - 7 2006

PETITION TO MAKE SPECIAL BECAUSE OF APPLICANT'S AGE (37 C.F.R. § 1.102(c) AND M.P.E.P. § 708.02 IV)

NOTE: See M.P.E.P. § 708.02, 7th ed.

Applicant hereby petitions to make this application special because applicant is over 65 years of age.

As a showing of this fact, accompanying this petition is:

(check one of the following)

☐ applicant's birth certificate.

☒ a declaration by the applicant that he/she is over 65 years of age.

No fee is required with this petition, in accordance with 37 C.F.R. § 1.102(c).

Keith R. Haupt 4/18/06
SIGNATURE OF PRACTITIONER

Reg. No.: 37,638

Keith R. Haupt
(type or print name of practitioner)

Tel. No.: (513) 241-2324

441 Vine Street, 2700 Carew Tower
P.O. Address

Customer No.: 26875

Cincinnati, Ohio 45202

PTO/SB/27 (09-04)
Approved for use through 07/31/2006. OMB 0651-0031
U.S. Patent and Trademark Office; U.S. DEPARTMENT OF COMMERCE
Under the Paperwork Reduction Act of 1995, no persons are required to respond to a collection of information unless it displays a valid OMB control number.

REQUEST FOR EXPEDITED EXAMINATION OF A DESIGN APPLICATION (37 CFR 1.155)

Application Number	TBA 29/246,093
Filing Date	February 7, 2006
First Named Inventor	Stephan Hoefnagels
Title	User Interface For A Portion Of A Display Screen
Atty Docket Number	013797.01923

ADDRESS TO:
MAIL STOP EXPEDITED DESIGN
COMMISSIONER FOR PATENTS
P.O. Box 1450
Alexandria, VA 22313-1450

Approved 4-6-06
Jacqueline M. Stone
Jacqueline M. Stone, Director
Technology Center 1700

This is a request for expedited examination of a design application under 37 CFR 1.155.

NOTE: If the Request made by this form accompanies original application papers, include form PTO/SB/18 "Design Patent Application Transmittal" or its equivalent.

A preexamination search was conducted. The field of search was:

Class D14 (subclasses 485, 486, 487, 488, 489, 490, 491, 492, 493, 494, 495); Class 345 (subclasses 683, 902), Class 715 (subclasses 700, 733, 751, 752, 753, 754, 755, 756, 757, 758, 759, 762, 763, 764, 765, 779, 780, 781, 783, 809, 810)

Related applications: 013797.01722, 013797.01924, 013797.01925, filed 2/7/06

If not previously filed for the above-identified application, the following items required by 37 CFR 1.155 are enclosed:
Formal drawings (see 37 CFR 1.84).
The fee set forth in 37 CFR 1.17(k).
An information disclosure statement in compliance with 37 CFR 1.98.

Signature — February 7, 2006 (Date)

Ross A. Dannenberg (Typed or printed name) — 49,024 (Registration Number, if applicable)

(202) 824-3000
Telephone Number

WARNING: Information on this form may become public. Credit card information should not be included on this form. Provide credit card information and authorization on PTO-2038.

This collection of information is required by 37 CFR 1.155. The information is required to obtain or retain a benefit by the public which is to file (and by the USPTO to process) an application. Confidentiality is governed by 35 U.S.C. 122 and 37 CFR 1.11 and 1.14. This collection is estimated to take 6 minutes to complete, including gathering, preparing, and submitting the completed application form to the USPTO. Time will vary depending upon the individual case. Any comments on the amount of time you require to complete this form and/or suggestions for reducing this burden, should be sent to the Chief Information Officer, U.S. Patent and Trademark Office, U.S. Department of Commerce, P.O. Box 1450, Alexandria, VA 22313-1450. DO NOT SEND FEES OR COMPLETED FORMS TO THIS ADDRESS. SEND TO: **Mail Stop Expedited Design, Commissioner for Patents, P.O. Box 1450, Alexandria, VA 22313-1450.**
If you need assistance in completing the form, call 1-800-PTO-9199 and select option 2.

PTO/SB/27 (09-04)
Approved for use through 07/31/2006. OMB 0651-0031
U.S. Patent and Trademark Office; U.S. DEPARTMENT OF COMMERCE
Under the Paperwork Reduction Act of 1995, no persons are required to respond to a collection of information unless it displays a valid OMB control number.

REQUEST FOR EXPEDITED EXAMINATION OF A DESIGN APPLICATION (37 CFR 1.155)

Application Number	TBA 29/246,094
Filing Date	February 7, 2006
First Named Inventor	Stephan Hoefnagels
Title	User Interface For A Portion Of A Display Screen
Atty Docket Number	013797.01924

ADDRESS TO:
MAIL STOP EXPEDITED DESIGN
COMMISSIONER FOR PATENTS
P.O. Box 1450
Alexandria, VA 22313-1450

Approved 4-6-06
Jacqueline M. Stone
Jacqueline M. Stone, Director
Technology Center 1700/2900

This is a request for expedited examination of a design application under 37 CFR 1.155.

NOTE: If the Request made by this form accompanies original application papers, include form PTO/SB/18 "Design Patent Application Transmittal" or its equivalent.

A preexamination search was conducted. The field of search was:

Class D14 (subclasses 485, 486, 487, 488, 489, 490, 491, 492, 493, 494, 495); Class 345 (subclasses 683, 902), Class 715 (subclasses 700, 733, 751, 752, 753, 754, 755, 756, 757, 758, 759, 762, 763, 764, 765, 779, 780, 781, 783, 809, 810)

Related applications: 013797.01722, 013797.01923, 013797.01925, filed 2/7/06

If not previously filed for the above-identified application, the following items required by 37 CFR 1.155 are enclosed:
Formal drawings (see 37 CFR 1.84).
The fee set forth in 37 CFR 1.17(k).
An information disclosure statement in compliance with 37 CFR 1.98.

Signature — February 7, 2006 (Date)

Ross A. Dannenberg — Typed or printed name

49,024 — Registration Number, if applicable

(202) 824-3000
Telephone Number

WARNING: Information on this form may become public. Credit card information should not be included on this form. Provide credit card information and authorization on PTO-2038.

This collection of information is required by 37 CFR 1.155. The information is required to obtain or retain a benefit by the public which is to file (and by the USPTO to process) an application. Confidentiality is governed by 35 U.S.C. 122 and 37 CFR 1.11 and 1.14. This collection is estimated to take 6 minutes to complete, including gathering, preparing, and submitting the completed application form to the USPTO. Time will vary depending upon the individual case. Any comments on the amount of time you require to complete this form and/or suggestions for reducing this burden, should be sent to the Chief Information Officer, U.S. Patent and Trademark Office, U.S. Department of Commerce, P.O. Box 1450, Alexandria, VA 22313-1450. DO NOT SEND FEES OR COMPLETED FORMS TO THIS ADDRESS. SEND TO: **Mail Stop Expedited Design, Commissioner for Patents, P.O. Box 1450, Alexandria, VA 22313-1450.**
If you need assistance in completing the form, call 1-800-PTO-9199 and select option 2.

PTO/SB/27 (09-04)
Approved for use through 07/31/2006. OMB 0651-0031
U.S. Patent and Trademark Office; U.S. DEPARTMENT OF COMMERCE
Under the Paperwork Reduction Act of 1995, no persons are required to respond to a collection of information unless it displays a valid OMB control number.

REQUEST FOR EXPEDITED EXAMINATION OF A DESIGN APPLICATION (37 CFR 1.155)

Application Number	TBA 29/246,095
Filing Date	February 7, 2006
First Named Inventor	Stephan Hoefnagels
Title	User Interface For A Portion Of A Display Screen
Atty Docket Number	013797.01925

ADDRESS TO:
MAIL STOP EXPEDITED DESIGN
COMMISSIONER FOR PATENTS
P.O. Box 1450
Alexandria, VA 22313-1450

Approved 4-6-06
Jacqueline M. Stone
Jacqueline M. Stone, Director
Technology Center 1700

This is a request for expedited examination of a design application under 37 CFR 1.155.

NOTE: If the Request made by this form accompanies original application papers, include form PTO/SB/18 "Design Patent Application Transmittal" or its equivalent.

A preexamination search was conducted. The field of search was:

Class D14 (subclasses 485, 486, 487, 488, 489, 490, 491, 492, 493, 494, 495); Class 345 (subclasses 683, 902), Class 715 (subclasses 700, 733, 751, 752, 753, 754, 755, 756, 757, 758, 759, 762, 763, 764, 765, 779, 780, 781, 783, 809, 810)

Related applications: 013797.01722, 013797.01923, 013797.01924, filed 2/7/06

If not previously filed for the above-identified application, the following items required by 37 CFR 1.155 are enclosed:
Formal drawings (see 37 CFR 1.84).
The fee set forth in 37 CFR 1.17(k).
An information disclosure statement in compliance with 37 CFR 1.98.

Signature — Date: February 7, 2006

Ross A. Dannenberg — Typed or printed name

49,024 — Registration Number, if applicable

(202) 824-3000
Telephone Number

WARNING: Information on this form may become public. Credit card information should not be included on this form. Provide credit card information and authorization on PTO-2038.

This collection of information is required by 37 CFR 1.155. The information is required to obtain or retain a benefit by the public which is to file (and by the USPTO to process) an application. Confidentiality is governed by 35 U.S.C. 122 and 37 CFR 1.11 and 1.14. This collection is estimated to take 6 minutes to complete, including gathering, preparing, and submitting the completed application form to the USPTO. Time will vary depending upon the individual case. Any comments on the amount of time you require to complete this form and/or suggestions for reducing this burden, should be sent to the Chief Information Officer, U.S. Patent and Trademark Office, U.S. Department of Commerce, P.O. Box 1450, Alexandria, VA 22313-1450. DO NOT SEND FEES OR COMPLETED FORMS TO THIS ADDRESS. **SEND TO: Mail Stop Expedited Design, Commissioner for Patents, P.O. Box 1450, Alexandria, VA 22313-1450.**
If you need assistance in completing the form, call 1-800-PTO-9199 and select option 2.

PTO/SB/27 (09-04)
Approved for use through 07/31/2006. OMB 0651-0031
U.S. Patent and Trademark Office; U.S. DEPARTMENT OF COMMERCE
Under the Paperwork Reduction Act of 1995, no persons are required to respond to a collection of information unless it displays a valid OMB control number.

REQUEST FOR EXPEDITED EXAMINATION OF A DESIGN APPLICATION (37 CFR 1.155)

Application Number	TBA 29/246,115
Filing Date	February 17, 2006
First Named Inventor	Michael James Hone
Title	User Interface For A Portion Of A Display Screen
Atty Docket Number	013797.01926

ADDRESS TO:
MAIL STOP EXPEDITED DESIGN
COMMISSIONER FOR PATENTS
P.O. Box 1450
Alexandria, VA 22313-1450

Approved 4-6-06
Jacqueline M. Stone
Jacqueline M. Stone, Director
Technology Center 1700

This is a request for expedited examination of a design application under 37 CFR 1.155.

NOTE: If the Request made by this form accompanies original application papers, include form PTO/SB/18 "Design Patent Application Transmittal" or its equivalent.

A preexamination search was conducted. The field of search was:

Class D14 (subclasses 485, 486, 487, 488, 489, 490, 491, 492, 493, 494, 495); Class D18 (subclasses 24, 25, 26, 27, 28, 29, 30, 31, 32, 33); Class D19 (subclasses 6, 7); Class D20 (subclasses 11, 18); Class D21 (subclasses 324, 325, 326, 327, 328, 329, 330, 331, 332, 333); Class 345 (subclasses 683, 902), Class 715 (subclasses 700-726, 762-876, 973-977)

Related applications: 29/242,296 filed 11/9/05

If not previously filed for the above-identified application, the following items required by 37 CFR 1.155 are enclosed:
Formal drawings (see 37 CFR 1.84).
The fee set forth in 37 CFR 1.17(k).
An information disclosure statement in compliance with 37 CFR 1.98.

Signature — February 17, 2006 (Date)

Ross A. Dannenberg (Typed or printed name) — 49,024 (Registration Number, if applicable)

(202) 824-3000
Telephone Number

WARNING: Information on this form may become public. Credit card information should not be included on this form. Provide credit card information and authorization on PTO-2038.

This collection of information is required by 37 CFR 1.155. The information is required to obtain or retain a benefit by the public which is to file (and by the USPTO to process) an application. Confidentiality is governed by 35 U.S.C. 122 and 37 CFR 1.11 and 1.14. This collection is estimated to take 6 minutes to complete, including gathering, preparing, and submitting the completed application form to the USPTO. Time will vary depending upon the individual case. Any comments on the amount of time you require to complete this form and/or suggestions for reducing this burden, should be sent to the Chief Information Officer, U.S. Patent and Trademark Office, U.S. Department of Commerce, P.O. Box 1450, Alexandria, VA 22313-1450. DO NOT SEND FEES OR COMPLETED FORMS TO THIS ADDRESS. SEND TO: Mail Stop Expedited Design, Commissioner for Patents, P.O. Box 1450, Alexandria, VA 22313-1450.
If you need assistance in completing the form, call 1-800-PTO-9199 and select option 2.

UNITED STATES PATENT AND TRADEMARK OFFICE

Commissioner for Patents
United States Patent and Trademark Office
P.O. Box 1450
Alexandria, VA 22313-1450
www.uspto.gov

DAVID PRESSMAN, ESQ.
1070 GREEN STREET
#1402
SAN FRANCISCO, CA 94133-5418

COPY MAILED

APR 17 2007

OFFICE OF PETITIONS

In re Application of :
Perry W. Sands :
Application No. 29/246,302 : DECISION ON PETITION
Filed: March 30, 2006 :
Attorney Docket No. :
PerfMachTenSlanted/DelRey

This is a decision on the petition, filed September 28, 2006, which is being treated as a petition under 37 CFR 1.8(b), requesting withdrawal of the holding of abandonment in the above-identified application.

The petition is **GRANTED**.

A Notice of Allowance and Fee(s) Due and a Notice of Allowability were mailed on May 30, 2006 requiring submission of the $400 issue fee and a correction to Figure 2 on or before August 30, 2006 to avoid the abandonment of this application. The issue fee was timely received on June 27, 2006; however, the record fails to disclose that a drawing correction to Figure 2 was submitted within the time period set by the Notice of Allowability of May 30, 2006. Accordingly, this application became abandoned by operation of law on August 31, 2006 for failure to timely reply to the Notice of Allowability of May 30, 2006.

Petitioner states that a timely reply was mailed via certificate of mailing on June 27, 2006, which included a cover sheet entitled "Submission Of Corrected Drawing(s)" with an attached copy of a corrected sheet of Figure 2. Petitioner has submitted a copy of the previously mailed correspondence, which bears a certificate of mailing, dated June 27, 2006, which would have rendered the reply timely if received.

The file record does not include the originally submitted cover sheet with the attached correction to Figure 2. Failure to receive correspondence which includes a certificate of mailing or certificate of facsimile transmission is addressed in 37 CFR 1.8(b), reproduced below:

> In the event that correspondence is considered timely filed by being mailed or transmitted in accordance with paragraph (a) of this section, but not received

in the U.S. Patent and Trademark Office after a reasonable amount of time has elapsed from the time of mailing or transmitting of the correspondence, or after the application is held to be abandoned, or after the proceeding is dismissed, terminated, or decided with prejudice, the correspondence will be considered timely if the party who forwarded such correspondence:

(1) Informs the Office of the previous mailing or transmission of the correspondence promptly after becoming aware that the Office has no evidence of receipt of the correspondence;

(2) Supplies an additional copy of the previously mailed or transmitted correspondence and certificate; and

(3) Includes a statement which attests on a personal knowledge basis or to the satisfaction of the Director to the previous timely mailing or transmission. If the correspondence was sent by facsimile transmission, a copy of the sending unit's report confirming transmission may be used to support this statement.

The petition satisfies the above requirements of 37 CFR 1.8(b). Accordingly, the reply to the Notice of May 30, 2006 is considered to have been timely mailed via certificate of mailing on June 27, 2006 and any holding of abandonment for failure to timely file a reply to the Notice of May 30, 2006 is hereby withdrawn.

The copy of the reply received with the petition will be accepted in place of the reply mailed via certificate of mailing on June 27, 2006.

This application is being referred to Publishing Division for appropriate action in accordance with this decision.

Frances Hicks
Petitions Examiner
Office of Petitions

PTO/SB/27 (09-04)
Approved for use through 07/31/2006. OMB 0651-0031
U.S. Patent and Trademark Office; U.S. DEPARTMENT OF COMMERCE
Under the Paperwork Reduction Act of 1995, no persons are required to respond to a collection of information unless it displays a valid OMB control number.

REQUEST FOR EXPEDITED EXAMINATION OF A DESIGN APPLICATION (37 CFR 1.155)

Application Number	TBA 29/246 361
Filing Date	April 4, 2006
First Named Inventor	Jenny T. Lam
Title	Image For A Portion Of A Display Screen
Atty Docket Number	013797.02082

ADDRESS TO:
MAIL STOP EXPEDITED DESIGN
COMMISSIONER FOR PATENTS
P.O. Box 1450
Alexandria, VA 22313-1450

This is a request for expedited examination of a design application under 37 CFR 1.155.

NOTE: If the Request made by this form accompanies original application papers, include form PTO/SB/18 "Design Patent Application Transmittal" or its equivalent.

A preexamination search was conducted. The field of search was:

Class 345 (subclasses 473, 474, 475, 683, 687); Class 715 (subclasses 836, 861, 867); Class D14 (subclasses 485, 486, 487, 488, 489, 490, 491, 492, 493, 494, 495); Class D19 (Subclass 6), Class D21 (subclasses 324, 325, 326, 327, 328, 329, 330, 331, 332, 333)

Related applications Attorney Docket Nos.: 013797.02032, 013797.02034, 013797.02036, 013797.02083, 013797.02084, 013797.02085, and 013797.02086, filed concurrently herewith on 4/4/06.

If not previously filed for the above-identified application, the following items required by 37 CFR 1.155 are enclosed:
Formal drawings (see 37 CFR 1.84).
The fee set forth in 37 CFR 1.17(k).
An information disclosure statement in compliance with 37 CFR 1.98.

4-21-06
Approved
Jacqueline M. Stone
Jacqueline M. Stone, Director
Technology Center 1700

Signature — April 4, 2006 (Date)

Ross A. Dannenberg — Typed or printed name

49,024 — Registration Number, if applicable

(202) 824-3000 — Telephone Number

WARNING: Information on this form may become public. Credit card information should not be included on this form. Provide credit card information and authorization on PTO-2038.

This collection of information is required by 37 CFR 1.155. The information is required to obtain or retain a benefit by the public which is to file (and by the USPTO to process) an application. Confidentiality is governed by 35 U.S.C. 122 and 37 CFR 1.11 and 1.14. This collection is estimated to take 6 minutes to complete, including gathering, preparing, and submitting the completed application form to the USPTO. Time will vary depending upon the individual case. Any comments on the amount of time you require to complete this form and/or suggestions for reducing this burden, should be sent to the Chief Information Officer, U.S. Patent and Trademark Office, U.S. Department of Commerce, P.O. Box 1450, Alexandria, VA 22313-1450. DO NOT SEND FEES OR COMPLETED FORMS TO THIS ADDRESS. SEND TO: **Mail Stop Expedited Design, Commissioner for Patents, P.O. Box 1450, Alexandria, VA 22313-1450.**
If you need assistance in completing the form, call 1-800-PTO-9199 and select option 2.

PTO/SB/27 (09-04)
Approved for use through 07/31/2006. OMB 0651-0031
U.S. Patent and Trademark Office; U.S. DEPARTMENT OF COMMERCE
Under the Paperwork Reduction Act of 1995, no persons are required to respond to a collection of information unless it displays a valid OMB control number.

REQUEST FOR EXPEDITED EXAMINATION OF A DESIGN APPLICATION (37 CFR 1.155)

Application Number	TBA 29/246 362
Filing Date	April 4, 2006
First Named Inventor	Jenny T. Lam
Title	Image For A Portion Of A Display Screen
Atty Docket Number	013797.02083

ADDRESS TO:
MAIL STOP EXPEDITED DESIGN
COMMISSIONER FOR PATENTS
P.O. Box 1450
Alexandria, VA 22313-1450

This is a request for expedited examination of a design application under 37 CFR 1.155.

NOTE: If the Request made by this form accompanies original application papers, include form PTO/SB/18 "Design Patent Application Transmittal" or its equivalent.

A preexamination search was conducted. The field of search was:

Class 345 (subclasses 473, 474, 475, 683, 687); Class 715 (subclasses 836, 861, 867); Class D14 (subclasses 485, 486, 487, 488, 489, 490, 491, 492, 493, 494, 495); Class D19 (Subclass 6), Class D21 (subclasses 324, 325, 326, 327, 328, 329, 330, 331, 332, 333)

Related applications Attorney Docket Nos.: 013797.02032, 013797.02034, 013797.02036, 013797.02082, 013797.02084, 013797.02085, and 013797.02086, filed concurrently herewith on 4/4/06.

If not previously filed for the above-identified application, the following items required by 37 CFR 1.155 are enclosed:
Formal drawings (see 37 CFR 1.84).
The fee set forth in 37 CFR 1.17(k).
An information disclosure statement in compliance with 37 CFR 1.98.

Approved 4-21-06
Jacqueline M. Stone
Jacqueline M. Stone, Director
Technology Center 1700

Signature — April 4, 2006 (Date)

Ross A. Dannenberg — Typed or printed name

49,024 — Registration Number, if applicable

(202) 824-3000 — Telephone Number

WARNING: Information on this form may become public. Credit card information should not be included on this form. Provide credit card information and authorization on PTO-2038.

This collection of information is required by 37 CFR 1.155. The information is required to obtain or retain a benefit by the public which is to file (and by the USPTO to process) an application. Confidentiality is governed by 35 U.S.C. 122 and 37 CFR 1.11 and 1.14. This collection is estimated to take 6 minutes to complete, including gathering, preparing, and submitting the completed application form to the USPTO. Time will vary depending upon the individual case. Any comments on the amount of time you require to complete this form and/or suggestions for reducing this burden, should be sent to the Chief Information Officer, U.S. Patent and Trademark Office, U.S. Department of Commerce, P.O. Box 1450, Alexandria, VA 22313-1450. DO NOT SEND FEES OR COMPLETED FORMS TO THIS ADDRESS. SEND TO: **Mail Stop Expedited Design, Commissioner for Patents, P.O. Box 1450, Alexandria, VA 22313-1450.**
If you need assistance in completing the form, call 1-800-PTO-9199 and select option 2.

PTO/SB/27 (09-04)
Approved for use through 07/31/2006. OMB 0651-0031
U.S. Patent and Trademark Office; U.S. DEPARTMENT OF COMMERCE
Under the Paperwork Reduction Act of 1995, no persons are required to respond to a collection of information unless it displays a valid OMB control number.

REQUEST FOR EXPEDITED EXAMINATION OF A DESIGN APPLICATION (37 CFR 1.155)

Application Number	TBA 29/246 363
Filing Date	April 4, 2006
First Named Inventor	Jenny T. Lam
Title	Image For A Portion Of A Display Screen
Atty Docket Number	013797.02084

ADDRESS TO:
MAIL STOP EXPEDITED DESIGN
COMMISSIONER FOR PATENTS
P.O. Box 1450
Alexandria, VA 22313-1450

This is a request for expedited examination of a design application under 37 CFR 1.155.

NOTE: If the Request made by this form accompanies original application papers, include form PTO/SB/18 "Design Patent Application Transmittal" or its equivalent.

A preexamination search was conducted. The field of search was:

Class 345 (subclasses 473, 474, 475, 683, 687); Class 715 (subclasses 836, 861, 867); Class D14 (subclasses 485, 486, 487, 488, 489, 490, 491, 492, 493, 494, 495); Class D19 (Subclass 6), Class D21 (subclasses 324, 325, 326, 327, 328, 329, 330, 331, 332, 333)

Related applications Attorney Docket Nos.: 013797.02032, 013797.02034, 013797.02036, 013797.02082, 013797.02083, 013797.02085, and 013797.02086, filed concurrently herewith on 4/4/06.

If not previously filed for the above-identified application, the following items required by 37 CFR 1.155 are enclosed:
Formal drawings (see 37 CFR 1.84).
The fee set forth in 37 CFR 1.17(k).
An information disclosure statement in compliance with 37 CFR 1.98.

4-21-06
Approved
Jacqueline M. Stone
Jacqueline M. Stone, Director
Technology Center 1700

Ross D
Signature

April 4, 2006
Date

Ross A. Dannenberg
Typed or printed name

49,024
Registration Number, if applicable

(202) 824-3000
Telephone Number

WARNING: Information on this form may become public. Credit card information should not be included on this form. Provide credit card information and authorization on PTO-2038.

This collection of information is required by 37 CFR 1.155. The information is required to obtain or retain a benefit by the public which is to file (and by the USPTO to process) an application. Confidentiality is governed by 35 U.S.C. 122 and 37 CFR 1.11 and 1.14. This collection is estimated to take 6 minutes to complete, including gathering, preparing, and submitting the completed application form to the USPTO. Time will vary depending upon the individual case. Any comments on the amount of time you require to complete this form and/or suggestions for reducing this burden, should be sent to the Chief Information Officer, U.S. Patent and Trademark Office, U.S. Department of Commerce, P.O. Box 1450, Alexandria, VA 22313-1450. DO NOT SEND FEES OR COMPLETED FORMS TO THIS ADDRESS. SEND TO: **Mail Stop Expedited Design, Commissioner for Patents, P.O. Box 1450, Alexandria, VA 22313-1450.**
If you need assistance in completing the form, call 1-800-PTO-9199 and select option 2.

PTO/SB/27 (09-04)
Approved for use through 07/31/2006. OMB 0651-0031
U.S. Patent and Trademark Office; U.S. DEPARTMENT OF COMMERCE
Under the Paperwork Reduction Act of 1995, no persons are required to respond to a collection of information unless it displays a valid OMB control number.

REQUEST FOR EXPEDITED EXAMINATION OF A DESIGN APPLICATION (37 CFR 1.155)		
	Application Number	TBA 29/246 364
	Filing Date	April 4, 2006
	First Named Inventor	Jenny T. Lam
	Title	Animated Image For A Portion Of A Display Screen
	Atty Docket Number	013797.02085

ADDRESS TO:
MAIL STOP EXPEDITED DESIGN
COMMISSIONER FOR PATENTS
P.O. Box 1450
Alexandria, VA 22313-1450

This is a request for expedited examination of a design application under 37 CFR 1.155.

NOTE: If the Request made by this form accompanies original application papers, include form PTO/SB/18 "Design Patent Application Transmittal" or its equivalent.

A preexamination search was conducted. The field of search was:

Class 345 (subclasses 473, 474, 475, 683, 687); Class 715 (subclasses 836, 861, 867); Class D14 (subclasses 485, 486, 487, 488, 489, 490, 491, 492, 493, 494, 495); Class D19 (Subclass 6), Class D21 (subclasses 324, 325, 326, 327, 328, 329, 330, 331, 332, 333)

Related applications Attorney Docket Nos.: 013797.02032, 013797.02034, 013797.02036, 013797.02082, 013797.02083, 013797.02084, and 013797.02086, filed concurrently herewith on 4/4/06.

If not previously filed for the above-identified application, the following items required by 37 CFR 1.155 are enclosed:
Formal drawings (see 37 CFR 1.84).
The fee set forth in 37 CFR 1.17(k).
An information disclosure statement in compliance with 37 CFR 1.98.

Approved 4-21-06
(Jacqueline M. Stone)
Jacqueline M. Stone, Director
Technology Center 1700

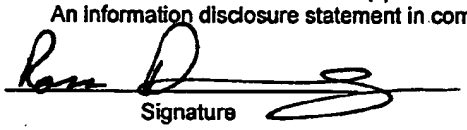
Signature

April 4, 2006
Date

Ross A. Dannenberg
Typed or printed name

49,024
Registration Number, if applicable

(202) 824-3000
Telephone Number

WARNING: Information on this form may become public. Credit card information should not be included on this form. Provide credit card information and authorization on PTO-2038.

This collection of information is required by 37 CFR 1.155. The information is required to obtain or retain a benefit by the public which is to file (and by the USPTO to process) an application. Confidentiality is governed by 35 U.S.C. 122 and 37 CFR 1.11 and 1.14. This collection is estimated to take 6 minutes to complete, including gathering, preparing, and submitting the completed application form to the USPTO. Time will vary depending upon the individual case. Any comments on the amount of time you require to complete this form and/or suggestions for reducing this burden, should be sent to the Chief Information Officer, U.S. Patent and Trademark Office, U.S. Department of Commerce, P.O. Box 1450, Alexandria, VA 22313-1450. DO NOT SEND FEES OR COMPLETED FORMS TO THIS ADDRESS. SEND TO: **Mail Stop Expedited Design, Commissioner for Patents, P.O. Box 1450, Alexandria, VA 22313-1450.**
If you need assistance in completing the form, call 1-800-PTO-9199 and select option 2.

PTO/SB/27 (09-04)
Approved for use through 07/31/2006. OMB 0651-0031
U.S. Patent and Trademark Office; U.S. DEPARTMENT OF COMMERCE
Under the Paperwork Reduction Act of 1995, no persons are required to respond to a collection of information unless it displays a valid OMB control number.

REQUEST FOR EXPEDITED EXAMINATION OF A DESIGN APPLICATION (37 CFR 1.155)

Application Number	TBA 29/246,365
Filing Date	April 4, 2006
First Named Inventor	Jenny T. Lam
Title	Animated Image For A Portion Of A Display Screen
Atty Docket Number	013797.02086

ADDRESS TO:
MAIL STOP EXPEDITED DESIGN
COMMISSIONER FOR PATENTS
P.O. Box 1450
Alexandria, VA 22313-1450

This is a request for expedited examination of a design application under 37 CFR 1.155.

NOTE: If the Request made by this form accompanies original application papers, include form PTO/SB/18 "Design Patent Application Transmittal" or its equivalent.

A preexamination search was conducted. The field of search was:

Class 345 (subclasses 473, 474, 475, 683, 687); Class 715 (subclasses 836, 861, 867); Class D14 (subclasses 485, 486, 487, 488, 489, 490, 491, 492, 493, 494, 495); Class D19 (Subclass 6), Class D21 (subclasses 324, 325, 326, 327, 328, 329, 330, 331, 332, 333)

Related applications Attorney Docket Nos.: 013797.02032, 013797.02034, 013797.02036, 013797.02082, 013797.02083, 013797.02084, and 013797.02085, filed concurrently herewith on 4/4/06.

If not previously filed for the above-identified application, the following items required by 37 CFR 1.155 are enclosed:
Formal drawings (see 37 CFR 1.84).
The fee set forth in 37 CFR 1.17(k).
An information disclosure statement in compliance with 37 CFR 1.98.

Approved 4-21-06
Jacqueline M. Stone
Jacqueline M. Stone, Director
Technology Center 1700

Signature — April 4, 2006 (Date)

Ross A. Dannenberg — Typed or printed name

49,024 — Registration Number, if applicable

(202) 824-3000 — Telephone Number

WARNING: Information on this form may become public. Credit card information should not be included on this form. Provide credit card information and authorization on PTO-2038.

This collection of information is required by 37 CFR 1.155. The information is required to obtain or retain a benefit by the public which is to file (and by the USPTO to process) an application. Confidentiality is governed by 35 U.S.C. 122 and 37 CFR 1.11 and 1.14. This collection is estimated to take 6 minutes to complete, including gathering, preparing, and submitting the completed application form to the USPTO. Time will vary depending upon the individual case. Any comments on the amount of time you require to complete this form and/or suggestions for reducing this burden, should be sent to the Chief Information Officer, U.S. Patent and Trademark Office, U.S. Department of Commerce, P.O. Box 1450, Alexandria, VA 22313-1450. DO NOT SEND FEES OR COMPLETED FORMS TO THIS ADDRESS. SEND TO: Mail Stop Expedited Design, Commissioner for Patents, P.O. Box 1450, Alexandria, VA 22313-1450.
If you need assistance in completing the form, call 1-800-PTO-9199 and select option 2.

PTO/SB/27 (09-04)
Approved for use through 07/31/2006. OMB 0651-0031
U.S. Patent and Trademark Office; U.S. DEPARTMENT OF COMMERCE
Under the Paperwork Reduction Act of 1995, no persons are required to respond to a collection of information unless it displays a valid OMB control number.

REQUEST FOR EXPEDITED EXAMINATION OF A DESIGN APPLICATION (37 CFR 1.155)		
	Application Number	TBA 29/246 366
	Filing Date	April 4, 2006
	First Named Inventor	Jenny T. Lam
	Title	Animated Image For A Portion Of A Display Screen
	Atty Docket Number	013797.02032

ADDRESS TO:
MAIL STOP EXPEDITED DESIGN
COMMISSIONER FOR PATENTS
P.O. Box 1450
Alexandria, VA 22313-1450

This is a request for expedited examination of a design application under 37 CFR 1.155.

NOTE: If the Request made by this form accompanies original application papers, include form PTO/SB/18 "Design Patent Application Transmittal" or its equivalent.

A preexamination search was conducted. The field of search was:

Class 345 (subclasses 473, 474, 475, 683, 687); Class 715 (subclasses 836, 861, 867); Class D14 (subclasses 485, 486, 487, 488, 489, 490, 491, 492, 493, 494, 495); Class D19 (Subclass 6), Class D21 (subclasses 324, 325, 326, 327, 328, 329, 330, 331, 332, 333)

Related applications Attorney Docket Nos.: 013797.02034, 013797.02036, 013797.02082, 013797.02083, 013797.02084, 013797.02085, and 013797.02086, filed concurrently herewith on 4/4/06.

If not previously filed for the above-identified application, the following items required by 37 CFR 1.155 are enclosed:
Formal drawings (see 37 CFR 1.84).
The fee set forth in 37 CFR 1.17(k).
An information disclosure statement in compliance with 37 CFR 1.98.

Approved 4-21-06
Jacqueline M. Stone
Jacqueline M. Stone, Director
Technology Center 1700

Signature — April 4, 2006 (Date)

Ross A. Dannenberg — Typed or printed name

49,024 — Registration Number, if applicable

(202) 824-3000 — Telephone Number

WARNING: Information on this form may become public. Credit card information should not be included on this form. Provide credit card information and authorization on PTO-2038.

This collection of information is required by 37 CFR 1.155. The information is required to obtain or retain a benefit by the public which is to file (and by the USPTO to process) an application. Confidentiality is governed by 35 U.S.C. 122 and 37 CFR 1.11 and 1.14. This collection is estimated to take 6 minutes to complete, including gathering, preparing, and submitting the completed application form to the USPTO. Time will vary depending upon the individual case. Any comments on the amount of time you require to complete this form and/or suggestions for reducing this burden, should be sent to the Chief Information Officer, U.S. Patent and Trademark Office, U.S. Department of Commerce, P.O. Box 1450, Alexandria, VA 22313-1450. DO NOT SEND FEES OR COMPLETED FORMS TO THIS ADDRESS. SEND TO: **Mail Stop Expedited Design, Commissioner for Patents, P.O. Box 1450, Alexandria, VA 22313-1450.**
If you need assistance in completing the form, call 1-800-PTO-9199 and select option 2.

PTO/SB/27 (09-04)
Approved for use through 07/31/2006. OMB 0651-0031
U.S. Patent and Trademark Office; U.S. DEPARTMENT OF COMMERCE
Under the Paperwork Reduction Act of 1995, no persons are required to respond to a collection of information unless it displays a valid OMB control number.

REQUEST FOR EXPEDITED EXAMINATION OF A DESIGN APPLICATION (37 CFR 1.155)

Application Number	TBA 29/246 367
Filing Date	April 4, 2006
First Named Inventor	Jenny T. Lam
Title	Animated Image For A Portion Of A Display Screen
Atty Docket Number	013797.02034

ADDRESS TO:
MAIL STOP EXPEDITED DESIGN
COMMISSIONER FOR PATENTS
P.O. Box 1450
Alexandria, VA 22313-1450

This is a request for expedited examination of a design application under 37 CFR 1.155.

NOTE: If the Request made by this form accompanies original application papers, include form PTO/SB/18 "Design Patent Application Transmittal" or its equivalent.

A preexamination search was conducted. The field of search was:

Class 345 (subclasses 473, 474, 475, 683, 687); Class 715 (subclasses 836, 861, 867); Class D14 (subclasses 485, 486, 487, 488, 489, 490, 491, 492, 493, 494, 495); Class D19 (Subclass 6), Class D21 (subclasses 324, 325, 326, 327, 328, 329, 330, 331, 332, 333)

Related applications Attorney Docket Nos.: 013797.02032, 013797.02036, 013797.02082, 013797.02083, 013797.02084, 013797.02085, and 013797.02086, filed concurrently herewith on 4/4/06.

If not previously filed for the above-identified application, the following items required by 37 CFR 1.155 are enclosed:
Formal drawings (see 37 CFR 1.84).
The fee set forth in 37 CFR 1.17(k).
An information disclosure statement in compliance with 37 CFR 1.98.

Approved 5-5-06
Jacqueline M. Stone, Director
Technology Center 1700/2900

Signature

April 4, 2006
Date

Ross A. Dannenberg
Typed or printed name

49,024
Registration Number, if applicable

(202) 824-3000
Telephone Number

WARNING: Information on this form may become public. Credit card information should not be included on this form. Provide credit card information and authorization on PTO-2038.

This collection of information is required by 37 CFR 1.155. The information is required to obtain or retain a benefit by the public which is to file (and by the USPTO to process) an application. Confidentiality is governed by 35 U.S.C. 122 and 37 CFR 1.11 and 1.14. This collection is estimated to take 6 minutes to complete, including gathering, preparing, and submitting the completed application form to the USPTO. Time will vary depending upon the individual case. Any comments on the amount of time you require to complete this form and/or suggestions for reducing this burden, should be sent to the Chief Information Officer, U.S. Patent and Trademark Office, U.S. Department of Commerce, P.O. Box 1450, Alexandria, VA 22313-1450. DO NOT SEND FEES OR COMPLETED FORMS TO THIS ADDRESS. SEND TO: Mail Stop Expedited Design, Commissioner for Patents, P.O. Box 1450, Alexandria, VA 22313-1450.
If you need assistance in completing the form, call 1-800-PTO-9199 and select option 2.

PTO/SB/27 (09-04)
Approved for use through 07/31/2006. OMB 0651-0031
U.S. Patent and Trademark Office; U.S. DEPARTMENT OF COMMERCE
Under the Paperwork Reduction Act of 1995, no persons are required to respond to a collection of information unless it displays a valid OMB control number.

REQUEST FOR EXPEDITED EXAMINATION OF A DESIGN APPLICATION (37 CFR 1.155)

Application Number	TBA 29/246 368
Filing Date	April 4, 2006
First Named Inventor	Jenny T. Lam
Title	Animated Image For A Portion Of A Display Screen
Atty Docket Number	013797.02036

ADDRESS TO:
MAIL STOP EXPEDITED DESIGN
COMMISSIONER FOR PATENTS
P.O. Box 1450
Alexandria, VA 22313-1450

This is a request for expedited examination of a design application under 37 CFR 1.155.

NOTE: If the Request made by this form accompanies original application papers, include form PTO/SB/18 "Design Patent Application Transmittal" or its equivalent.

A preexamination search was conducted. The field of search was:

Class 345 (subclasses 473, 474, 475, 683, 687); Class 715 (subclasses 836, 861, 867); Class D14 (subclasses 485, 486, 487, 488, 489, 490, 491, 492, 493, 494, 495); Class D19 (Subclass 6), Class D21 (subclasses 324, 325, 326, 327, 328, 329, 330, 331, 332, 333)

Related applications Attorney Docket Nos.: 013797.02032, 013797.02034, 013797.02082, 013797.02083, 013797.02084, 013797.02085, and 013797.02086, filed concurrently herewith on 4/4/06.

If not previously filed for the above-identified application, the following items required by 37 CFR 1.155 are enclosed:
Formal drawings (see 37 CFR 1.84).
The fee set forth in 37 CFR 1.17(k).
An information disclosure statement in compliance with 37 CFR 1.98.

5-5-06
Approved
Jacqueline M. Stone
Jacqueline M. Stone, Director
Technology Center 1700/2900

Signature

April 4, 2006
Date

Ross A. Dannenberg
Typed or printed name

49,024
Registration Number, if applicable

(202) 824-3000
Telephone Number

WARNING: Information on this form may become public. Credit card information should not be included on this form. Provide credit card information and authorization on PTO-2038.

This collection of information is required by 37 CFR 1.155. The information is required to obtain or retain a benefit by the public which is to file (and by the USPTO to process) an application. Confidentiality is governed by 35 U.S.C. 122 and 37 CFR 1.11 and 1.14. This collection is estimated to take 6 minutes to complete, including gathering, preparing, and submitting the completed application form to the USPTO. Time will vary depending upon the individual case. Any comments on the amount of time you require to complete this form and/or suggestions for reducing this burden, should be sent to the Chief Information Officer, U.S. Patent and Trademark Office, U.S. Department of Commerce, P.O. Box 1450, Alexandria, VA 22313-1450. DO NOT SEND FEES OR COMPLETED FORMS TO THIS ADDRESS. **SEND TO: Mail Stop Expedited Design, Commissioner for Patents, P.O. Box 1450, Alexandria, VA 22313-1450.**
If you need assistance in completing the form, call 1-800-PTO-9199 and select option 2.

OIPE MAY 15 2006 PATENT & TRADEMARK OFFICE

PTO/SB/27 (09-04)
Approved for use through 07/31/2006. OMB 0651-0031
U.S. Patent and Trademark Office; U.S DEPARTMENT OF COMMERCE
Under the Paperwork Reduction Act of 1995, no persons are required to respond to collection of information unless it displays a valid OMB control number.

REQUEST FOR EXPEDITED EXAMINATION OF A DESIGN APPLICATION (37 CFR 1.155)

Application Number	29/246,414
Filing Date	4/7/06
First Named Inventor	Dean J. Long
Title	Cigar or Cigarette Holder
Atty Docket Number	60,253-007

ADDRESS TO:
MAIL STOP EXPEDITED DESIGN
COMMISSIONER FOR PATENTS
P.O. Box 1450
Alexandria, VA 22313-1450

Approved 5-22-06
Jacqueline M. Stowe
Jacqueline M. Stowe, Director
Technology Center 1700/2900

This is a request for expedited examination of a design application under 37 CFR 1.155.

NOTE: If the Request made by this form accompanies original application papers, include form PTO/SB/18 "Design Patent Application Transmittal" or its equivalent.

A preexamination search was conducted. The field of search was:

D27/103; D27/106; D27/172; D27/183; D27/188; D27/192; 131/175; 131/187; 131/190; 131/250; 131/241; 131/240.1

Related applications: _____

If not previously filed for the above-identified application, the following items required by 37 CFR 1.155 are enclosed:

- Formal drawings (see 37 CFR 1.84).
- The fee set forth in 37 CFR 1.17(k).
- An information disclosure statement in compliance with 37 CFR 1.98.

Trent K. English — Signature

5/10/06 — Date

Trent K. English — Typed or printed name

56,951 — Registration Number, if applicable

(248) 723-0462 — Telephone Number

WARNING: Information on this form may become public. Credit card information should not be included on this form. Provide credit card information and authorization on PTO-2038.

This collection of information is required by 37 CFR 1.155. The information is required to obtain or retain a benefit by the public which is to file (and by the USPTO to process) an application. Confidentiality is governed by 35 U.S.C. 122 and 37 CFR 1.11 and 1.14. This collection is estimated to take 6 minutes to complete, including gathering, preparing, and submitting the completed application form to the USPTO. Time will vary depending upon the individual case. Any comments on the amount of time you require to complete this form and/or suggestions for reducing this burden, should be sent to the Chief Information Officer, U.S. Patent and Trademark Office, U.S. Department of Commerce, P.O. Box 1450, Alexandria, VA 22313-1450. DO NOT SEND FEES OR COMPLETED FORMS TO THIS ADDRESS. SEND TO: Commissioner for Patents, P.O. Box 1450, Alexandria, VA 22313-1450.

If you need assistance in completing the form, call 1-800-PTO-9199 and select option 2.

OIPE IAP17
MAY 15 2006
PATENT & TRADEMARK OFFICE

IN THE UNITED STATES PATENT AND TRADEMARK OFFICE

In re application of:	Dean J. Long
Serial No.:	29/246,414
Filed:	April 7, 2006
Group Art Unit:	To Be Assigned
Examiner:	To Be Assigned
Docket No.:	60,253-007
For:	Cigar or Cigarette Holder

REQUEST FOR EXPEDITED EXAMINATION OF A DESIGN APPLICATION (37 CFR 1.155)

Mail Stop Expedited Design
Commissioner for Patents
P.O. Box 1450
Alexandria, VA 22313-1450

Dear Sir:

Transmitted with this document is a Request for Expedited Examination of a Design Application (37 C.F.R. 1.155) for the above-identified application and a copy of an Information Disclosure Statement, which was filed electronically with the United States Patent Office on May 9, 2006.

CERTIFICATE OF MAILING

I hereby certify that the attached **Request for Expedited Examination of A Design Application; a check in the amount of $900.00; copy of an Information Disclosure Statement;** and **return post card** are being deposited with the United States Postal Service as first class mail, postage prepaid, in an envelope addressed to the Mail Stop: **Expedited Design, Commissioner for Patents, P.O. Box 1450, Alexandria, Virginia 22313-1450**, on May 10, 2006.

Kimberly D. Keeler

05/16/2006 CHEGA1 00000035 29246414
01 FC:1802 300.00 OP

PTO/SB/27 (09-04)
Approved for use through 07/31/2006. OMB 0651-0031
U.S. Patent and Trademark Office; U.S DEPARTMENT OF COMMERCE
Under the Paperwork Reduction ACT of 1995, no persons are required to respond to collection of information unless it displays a valid OMB control number.

REQUEST FOR EXPEDITED EXAMINATION OF A DESIGN APPLICATION (37 CFR 1.155)

Application Number	29/246,424
Filing Date	April 10, 2006
First Named Inventor	Peter Famum
Title	Radio Frequency Identification Tag Reader
Atty Docket Number	0888888-3063

ADDRESS TO:

MAIL STOP EXPEDITED DESIGN
COMMISSIONER FOR PATENTS
P.O. Box 1450
Alexandria, VA 22313-1450

This is a request for expedited examination of a design application under 37 CFR 1.155.

NOTE: If the Request made by this form accompanies original application papers, include form PTO/SB/18 "Design Patent Application Transmittal" or its equivalent.

A preexamination search was conducted. The field of search was:

U.S. Current Classifications D14/383 and D14/114; Additionally a search for design patents having "Radio & Frequency" in the title was conducted at the USPTO website.

Related applications:

If not previously filed for the above-identified application, the following items required by 37 CFR 1.155 are enclosed:

- Formal drawings (see 37 CFR 1.84).
- The fee set forth in 37 CFR 1.17(k). $900.00
- An information disclosure statement in compliance with 37 CFR 1.98.

Approved 4-21-06
Jacqueline M. Stone
Jacqueline M. Stone, Director
Technology Center 1700

/Leigh J. Martinson/	April 10, 2006
Signature	Date
Leigh J. Martinson	50,749
Typed or printed name	Registration Number, if applicable
617-248-4003	
Telephone Number	

WARNING: Information on this form may become public. Credit card information should not be included on this form. Provide credit card information and authorization on PTO-2038.

This collection of information is required by 37 CFR 1.155. The information is required to obtain or retain a benefit by the public which is to file (and by the USPTO to process) an application. Confidentiality is governed by 35 U.S.C. 122 and 37 CFR 1.11 and 1.14. This collection is estimated to take 6 minutes to complete, including gathering, preparing, and submitting the completed application form to the USPTO. Time will vary depending upon the individual case. Any comments on the amount of time you require to complete this form and/or suggestions for reducing this burden, should be sent to the Chief Information Officer, U.S. Patent and Trademark Office, U.S. Department of Commerce, P.O. Box 1450, Alexandria, VA 22313-1450. DO NOT SEND FEES OR COMPLETED FORMS TO THIS ADDRESS. **SEND TO: Commissioner for Patents, P.O. Box 1450, Alexandria, VA 22313-1450.**

If you need assistance in completing the form, call 1-800-PTO-9199 and select option 2.

UNITED STATES PATENT AND TRADEMARK OFFICE

Commissioner for Patents
United States Patent and Trademark Office
P.O. Box 1450
Alexandria, VA 22313-1450
www.uspto.gov

HAYNES AND BOONE, LLP
901 MAIN STREET, SUITE 3100
DALLAS TX 75202

COPY MAILED

JUL 23 2007

OFFICE OF PETITIONS

In re Application of :

Brent Duwe et al. :
Application No. 29/246,483 :
Filed: April 18, 2006 :
Attorney Docket No. 23667.371 :

DECISION ON PETITION
TO WITHDRAW
FROM RECORD

This is a decision on the Request to Withdraw as attorney or agent of record under 37 C.F.R. § 1.36(b), filed January 29, 2007.

The request is **NOT APPROVED**.

A grantable request to withdraw as attorney/agent of record must be signed by every attorney/agent seeking to withdraw or contain a clear indication that one attorney is signing on behalf of another/others. A request to withdraw will not be approved unless at least 30 (thirty) days would remain between the date of approval and the later of the expiration date of a time to file a response or the expiration date of the maximum time period which can be extended under 37 C.F.R. § 1.136(a).

The Office cannot approve the request at this time since the reasons provided do not meet any of the conditions under the mandatory or permissive categories enumerated in 37 CFR 10.40. Section 10.40 of Title 37 of the Code of Federal Regulation states, "[a] practitioner shall not withdraw from employment in a proceeding before the Office without permission from the Office[.]" More specifically, 37 CFR 10.40 states, "[i]f paragraph (b) of this section is not applicable, a practitioner may not request permission to withdraw in matter pending before the Office unless such request or such withdrawal is" for one the permissive reasons listed in 37 CFR 10.40(c). The reasons set forth in the request, ***the file is being transferred to another law firm***, do not meet any the conditions set forth in 37 CFR 10.40.

All future communications from the Office will continue to be directed to the above-listed address until otherwise notified by applicant.

Telephone inquiries concerning this decision should be directed to Terri Williams at 571-272- 2991.

T. Williams

Terri Williams
Petitions Examiner
Office of Petitions

cc: **King & Spalding, L.L.P.**
Todd Mattingly
1100 Louisiana, suite 4000
Houston, TX 77002

UNITED STATES PATENT AND TRADEMARK OFFICE

Commissioner for Patents
United States Patent and Trademark Office
P.O. Box 1450
Alexandria, VA 22313-1450
www.uspto.gov

HAYNES AND BOON LLP
901 MAIN STREET, SUITE 3100
DALLAS, TX 75202

COPY MAILED

SEP 18 2007

OFFICE OF PETITIONS

In re Application of :
DUWE, et al. :
Application No. 29/246,485 : DECISION ON PETITION
Filed: April 18, 2006 : TO WITHDRAW
Attorney Docket No. **13682.105022** : FROM RECORD
:

This is a decision on the Request to Withdraw as attorney or agent of record under 37 C.F.R. § 1.36(b), filed January 29, 2007 and re-submitted February 19, 2007.

The request is **NOT APPROVED** as moot.

A review of the file record indicates that the power of attorney to **HAYNES AND BOON LLP** has been revoked by the assignee of the patent application on August 13, 2007. Accordingly, the request to withdraw under 37 C.F.R. § 1.36(b) is moot.

All future communications from the Office will continue to be directed to the below-listed address until otherwise notified by applicant.

Telephone inquires concerning this decision should be directed to the undersigned at 571-272-7253.

Monica A. Graves
Petitions Examiner
Office of Petitions

cc: **KING & SPALDING LLP**
1180 PEACHTREE STREET
ATLANTA, GA 30309-3521

UNITED STATES PATENT AND TRADEMARK OFFICE

Commissioner for Patents
United States Patent and Trademark Office
P.O. Box 1450
Alexandria, VA 22313-1450
www.uspto.gov

NOVAK DRUCE + QUIGG LLP
1300 EYE STREET NW
SUITE 1000 WEST TOWER
WASHINGTON DC 20005

COPY MAILED

AUG 21 2008

In re Application of :
Jason T. Griffin :
Application No. 29/246,548 : ON PETITION
Filed: April 21, 2006 :
Attorney Docket No. 8085.043.DESUS1 :

This is a decision on the petition under 37 CFR 1.137(b), filed May 2, 2008, to revive the above-identified application.

The petition is **DISMISSED**.

Any request for reconsideration of this decision must be submitted within TWO (2) MONTHS from the mail date of this decision. Extensions of time under 37 CFR 1.136(a) are permitted. The reconsideration request should include a cover letter entitled "Renewed Petition under 37 CFR 1.137(b)." This is **not** a final agency action within the meaning of 5 U.S.C. § 704.

The above-identified application became abandoned for failure to submit the issue and publication fee in a timely manner in reply to the Notice of Allowance/Allowability mailed August 23, 2007 which set a statutory period for reply of three (3) months. Accordingly, by operation of law, the above-identified application became abandoned on November 24, 2007.

A grantable petition under 37 CFR 1.137(b) must be accompanied by: (1) the required reply, unless previously filed; (2) the petition fee as set forth in 37 CFR 1.17(m); (3) a statement that the entire delay in filing the required reply from the due date for the reply until the filing of a grantable petition pursuant to 37 CFR 1.137(b) was unintentional; and (4) any terminal disclaimer (and fee as set forth in 37 CFR 1.20(d)) required by 37 CFR 1.137(d). Where there is a question as to whether either the abandonment or the delay in filing a petition under 37 CFR 1.137 was unintentional, the Commissioner may require additional information. See MPEP 711.03(c)(III)(C) and (D). The instant petition lacks item (4).

The terminal disclaimer filed with the instant petition was signed by Tracy Druce who is not the attorney of record. In fact, there is no attorney of record for this application.

Further correspondence with respect to this matter should be addressed as follows:

By Mail: Mail Stop PETITION
Commissioner for Patents
P. O. Box 1450
Alexandria, VA 22313-1450

By hand: U. S. Patent and Trademark Office
Customer Service Window, Mail Stop Petitions
Randolph Building
401 Dulany Street
Alexandria, VA 22314

The centralized facsimile number is **(571) 273-8300.**

Telephone inquiries concerning this decision should be directed to the Carl Friedman at (571) 272-6842.

Carl Friedman
Petitions Examiner
Office of Petitions

UNITED STATES PATENT AND TRADEMARK OFFICE

Commissioner for Patents
United States Patent and Trademark Office
P.O. Box 1450
Alexandria, VA 22313-1450
www.uspto.gov

NOVAK DRUCE + QUIGG LLP (RIM)
1000 LOUISIANA STREET
FIFTY-THIRD FLOOR
HOUSTON TX 77002

COPY MAILED

OCT 2 4 2008

OFFICE OF PETITIONS

In re Application of :
Jason T. Griffin :
Application No. 29/246,548 : ON PETITION
Filed: April 21, 2006 :
Attorney Docket No. 8085.043.DESUS1 :

This is a decision on the renewed petition under 37 CFR 1.137(b), filed October 2, 2008, to revive the above-identified application.

The petition is **GRANTED**.

The above-identified application became abandoned for failure to submit the issue and publication fee in a timely manner in reply to the Notice of Allowance/Allowability mailed August 23, 2007, which set a period for reply of three (2) months. No reply was received. Accordingly, by operation of law, the above-identified application became abandoned on November 27,2007.

The petition decision mailed August 21, 2008 indicates the petition under 37 CFR 1.137(b) filed May 2, 2008 was dismissed as failing to meet the requirements of 37 CFR 1.137(b)(4). The terminal disclaimer was not properly signed.

The renewed petition satisfies the conditions for revival pursuant to the provisions of 37 CFR 1.137(b)(4) Accordingly, the issue and publication fees are accepted as having been unintentionally delayed.

Telephone inquiries concerning this decision should be directed to Carl Friedman at (571) 272-6842.

The application file is being referred to the Office of Data Managememt.

Carl Friedman
Petitions Examiner
Office of Petitions

UNITED STATES PATENT AND TRADEMARK OFFICE

Commissioner for Patents
United States Patent and Trademark Office
P.O. Box 1450
Alexandria, VA 22313-1450
www.uspto.gov

NOVAK DRUCE + QUIGG LLP (RIM)
1000 LOUISIANA STREET
FIFTY-THIRD FLOOR
HOUSTON TX 77002

COPY MAILED

OCT 3 0 2008

OFFICE OF PETITIONS

In re Application of :
Jason T. Griffin :
Application No. 29/246,548 :
Filed: April 21, 2006 :
Attorney Docket No. 8085.043.DESUS1 :

CORRECTED DECISION ON PETITION

This is a corrected decision on the renewed petition under 37 CFR 1.137(b), filed October 2, 2008, to revive the above-identified application.

The petition is **GRANTED**.

The above-identified application became abandoned for failure to submit a request for Continued Prosecution Application (CPA) in a timely manner in reply to the Notice of Allowance/Allowability mailed August 23, 2007, which set a period for reply of three (3) months. A reply in the form of a Request for Continued Examination (RCE) was filed November 21, 2007, however, an RCE is not proper in design applications and a Notice of Improper Request for Continued Examination (RCE) was mailed April 24, 2008. Accordingly, by operation of law, the above-identified application became abandoned on November 27, 2007.

The petition decision mailed August 21, 2008 indicates the petition under 37 CFR 1.137(b) filed May 2, 2008 was dismissed as failing to meet the requirements of 37 CFR 1.137(b)(4). The terminal disclaimer was not properly signed.

The renewed petition satisfies the conditions for revival pursuant to the provisions of 37 CFR 1.137(b)(4) Accordingly, the request for Continued Prosecution Application is accepted as having been unintentionally delayed.

Telephone inquiries concerning this decision should be directed to Carl Friedman at (571) 272-6842.

The application file is being referred to Technology Center Art Unit 2916 for processing of the CPA.

Carl Friedman
Petitions Examiner
Office of Petitions

PTO/SB/27 (08-00)
Approved for use through 10/31/2002. OMB 0651-0031
U.S. Patent and Trademark Office; U.S. DEPARTMENT OF COMMERCE
Under the Paperwork Reduction Act of 1995, no persons are required to respond to a collection of information unless it displays a valid OMB control number.

REQUEST FOR EXPEDITED EXAMINATION OF A DESIGN APPLICATION (37 CFR 1.155)		
	Application Number	29/246,572
	Filing Date	04/24/2006
	First Named Inventor	WAYNE H. BYRNE
	Title	PUTTER HEAD FACE
	Atty Docket Number	PD2250

HAND DELIVER TO THE DESIGN GROUP DIRECTOR'S OFFICE
-or- ADDRESS TO:
COMMISSIONER FOR PATENTS
BOX EXPEDITED DESIGN
WASHINGTON, D.C. 20231

This is a request for expedited examination of a design application under 37 CFR 1.155.

NOTE: If the Request made by this form accompanies original application papers, include form PTO/SB/18 "Design Patent Application Transmittal" or its equivalent.

A preexamination search was conducted. The field of search was:
473/340; D21/733, 752, D21/759; 473/324-331, 343-346

Approved 5-16-06
Jacqueline M. Stone
Jacqueline M. Stone, Director
Technology Center 1700/2900

Related applications: 29/246,573; 11/275,551

If not previously filed for the above-identified application, the following items required by 37 CFR 1.155 are enclosed:

Formal drawings (see 37 CFR 1.84).

The fee set forth in 37 CFR 1.17(k).

An information disclosure statement in compliance with 37 CFR 1.98.

5/5/06
Date

Signature
MICHAEL A. CATANIA
Typed or printed name

WARNING: Information on this form may become public. Credit card information should not be included on this form. Provide credit card information and authorization on PTO-2038.

Burden Hour Statement: This collection of information is required by 37 CFR 1.155. The information is used by the public to request (and the PTO to process) expedited examination of a design application. Confidentiality is governed by 35 U.S.C. 122 and 37 CFR 1.14. This form is estimated to take 6 minutes to complete. This time will vary depending upon the needs of the individual case. Any comments on the amount of time you are required to complete this form should be sent to the Chief Information Officer, U.S. Patent and Trademark Office, Washington, DC 20231. DO NOT SEND FEES OR COMPLETED FORMS TO THIS ADDRESS. SEND TO: Commissioner for Patents, Box Expedited Design, Washington, DC 20231.

PTO/SB/27 (08-00)
Approved for use through 10/31/2002. OMB 0651-0031
U.S. Patent and Trademark Office; U.S. DEPARTMENT OF COMMERCE
Under the Paperwork Reduction Act of 1995, no persons are required to respond to a collection of information unless it displays a valid OMB control number.

REQUEST FOR EXPEDITED EXAMINATION OF A DESIGN APPLICATION (37 CFR 1.155)		
	Application Number	29/246,573
	Filing Date	04/24/2006
	First Named Inventor	WAYNE H. BYRNE
	Title	PUTTER HEAD FACE
	Atty Docket Number	PD2251

HAND DELIVER TO THE DESIGN GROUP DIRECTOR'S OFFICE
-or- ADDRESS TO:
COMMISSIONER FOR PATENTS
BOX EXPEDITED DESIGN
WASHINGTON, D.C. 20231

This is a request for expedited examination of a design application under 37 CFR 1.155.

NOTE: If the Request made by this form accompanies original application papers, include form PTO/SB/18 "Design Patent Application Transmittal" or its equivalent.

A preexamination search was conducted. The field of search was:
473/340; D21/733, 752, D21/759; 473/324-331, 343-346

5-16-06
Approved
Jacqueline M. Stone
Jacqueline M. Stone, Director
Technology Center 1700/2900

Related applications: 29/246,572; 11/275,551

If not previously filed for the above-identified application, the following items required by 37 CFR 1.155 are enclosed:

Formal drawings (see 37 CFR 1.84).

The fee set forth in 37 CFR 1.17(k).

An information disclosure statement in compliance with 37 CFR 1.98.

5/5/06
Date

Signature
MICHAEL A. CATANIA
Typed or printed name

WARNING: Information on this form may become public. Credit card information should not be included on this form. Provide credit card information and authorization on PTO-2038.

Burden Hour Statement: This collection of information is required by 37 CFR 1.155. The information is used by the public to request (and the PTO to process) expedited examination of a design application. Confidentiality is governed by 35 U.S.C. 122 and 37 CFR 1.14. This form is estimated to take 6 minutes to complete. This time will vary depending upon the needs of the individual case. Any comments on the amount of time you are required to complete this form should be sent to the Chief Information Officer, U.S. Patent and Trademark Office, Washington, DC 20231. DO NOT SEND FEES OR COMPLETED FORMS TO THIS ADDRESS. SEND TO: Commissioner for Patents, Box Expedited Design, Washington, DC 20231.

SPE RESPONSE FOR CERTIFICATE OF CORRECTION

Paper No.: —

DATE : 11/12/08

TO SPE OF : ART UNIT 2911

SUBJECT : Request for Certificate of Correction for Appl. No.: 29/246576 Patent No.: D578539S

Please respond to this request for a certificate of correction within 7 days.

FOR IFW FILES:

Please review the requested changes/corrections as shown in the **COCIN** document(s) in the IFW application image. No new matter should be introduced, nor should the scope or meaning of the claims be changed.

Please complete the response (see below) and forward the completed response to scanning using document code **COCX**.

FOR PAPER FILES:

Please review the requested changes/corrections as shown in the attached certificate of correction. Please complete this form (see below) and forward it with the file to:

Certificates of Correction Branch (CofC)
South Tower - 9A22
Palm Location 7580

Virginia Tolbert
Certificates of Correction Branch
703-308-9390 ext. 113

Thank You For Your Assistance

The request for issuing the above-identified correction(s) is hereby:
Note your decision on the appropriate box.

- ☒ **Approved** — All changes apply.
- ☐ **Approved in Part** — Specify below which changes **do not** apply.
- ☐ **Denied** — State the reasons for denial below.

Comments: _____

CATHRON C. BROOKS
SUPERVISORY PATENT EXAMINER

SPE 2911 **Art Unit**

SPE RESPONSE FOR CERTIFICATE OF CORRECTION

Paper No.: —

DATE : 11/12/08

TO SPE OF : ART UNIT 2911

SUBJECT : Request for Certificate of Correction for Appl. No.: 29/246,572 Patent No.: D578548

Please respond to this request for a certificate of correction within 7 days.

FOR IFW FILES:

Please review the requested changes/corrections as shown in the **COCIN** document(s) in the IFW application image. No new matter should be introduced; nor should the scope or meaning of the claims be changed.

Please complete the response (see below) and forward the completed response to scanning using document code **COCX**.

FOR PAPER FILES:

Please review the requested changes/corrections as shown in the attached certificate of correction. Please complete this form (see below) and forward it with the file to:

Certificates of Correction Branch (CofC)
South Tower - 9A22
Palm Location 7580

Virginia Tolbert
Certificates of Correction Branch
703-308-9390 ext. 113

Thank You For Your Assistance

The request for issuing the above-identified correction(s) is hereby:
Note your decision on the appropriate box.

☒ **Approved**	All changes apply.
☐ **Approved in Part**	Specify below which changes **do not** apply.
☐ **Denied**	State the reasons for denial below.

Comments: _____

CATHRON C. BROOKS
SUPERVISORY PATENT EXAMINER
SPE

2911
Art Unit

UNITED STATES PATENT AND TRADEMARK OFFICE

Commissioner for Patents
United States Patent and Trademark Office
P.O. Box 1450
Alexandria, VA 22313-1450
www.uspto.gov

RUTTLER LAW PLLC
ONE UNION SQUARE
600 UNIVERSITY STREET
SUITE 1730
SEATTLE, WA 98101

COPY MAILED

AUG 0 7 2007

OFFICE OF PETITIONS

In re Application of :
Mary Beth Kaiser :
Application No. 29/246,611 : DECISION ON PETITION
Filed: April 27, 2006 : TO WITHDRAW
Attorney Docket No. MARY-2-1002 : FROM RECORD

This is a decision on the Request to Withdraw as attorney or agent of record under 37 C.F.R. § 1.36(b) filed January 23, 2007.

The request is **DISMISSED** as moot.

A review of the file record indicates that the power of attorney to Ruttler Law, PLLC has been revoked by the applicant of the patent application on March 9, 2007. Accordingly, the request to withdraw under 37 C.F.R. § 1.36(b) is moot.

All future communications from the Office will continue to be directed to the below-listed address until otherwise notified by applicant.

Telephone inquires concerning this decision should be directed to undersigned at 571-272-1642.

April M. Wise
Petitions Examiner
Office of Petitions

cc: MARY BETH KAISER
1634 2ND AVENUE WEST
SEATTLE, WA 98119

UNITED STATES PATENT AND TRADEMARK OFFICE

Commissioner for Patents
United States Patent and Trademark Office
P.O. Box 1450
Alexandria, VA 22313-1450
www.uspto.gov

Ruttler Law LLC
1122 East Pike Street
#1131
Seattle, WA 98122

COPY MAILED

AUG 0 2 2007

OFFICE OF PETITIONS

In re Application of :
Mary Beth Kaiser :
Application No. 29/246,612 : DECISION ON PETITION
Filed: April 27, 2006 : TO WITHDRAW
Attorney Docket No. MARY-2-1003 : FROM RECORD
:

This is a decision on the Request to Withdraw as attorney or agent of record under 37 C.F.R. § 1.36(b), filed January 23, 2007.

The request is **NOT APPROVED** as moot.

A review of the file record indicates that the power of attorney to Ruttler Law LLC has been revoked by the applicant of the patent application on March 9, 2007. Accordingly, the request to withdraw under 37 C.F.R. § 1.36(b) is moot.

All future communications from the Office will continue to be directed to the below-listed address until otherwise notified by applicant.

Telephone inquires concerning this decision should be directed to Terri Williams at 571-272-2991.

Terri Williams
Petitions Examiner
Office of Petitions

cc: **Cloutier & Engle, PLLC**
Attn : Priya Sinha Cloutier
320 Dayton Street
Suite 260
Edmonds, WA 98020

Commissioner for Patents
United States Patent and Trademark Office
P.O. Box 1450
Alexandria, VA 22313-1450
www.uspto.gov

KAMRATH & ASSOCIATES P.A.
4825 OLSON MEMORIAL HIGHWAY
SUITE 245
GOLDEN VALLEY MN 55422

COPY MAILED

DEC 20 2007

OFFICE OF PETITIONS

In re Application of :
Cheng : DECISION ON PETITION
Application No. 29/246,624 :
Filed: April 27, 2007 :
For: D95US-932-00027(60401DES) :

The above-identified application has been forwarded to the Office of Petitions for consideration of the "PETITION TO WITHDRAW," filed November 13, 2007. This matter is being treated under 37 CFR 1.181 as a petition to withdraw the holding of abandonment.

The petition under 37 CFR 1.181 is **GRANTED**.

This application was held abandoned April 22, 2007 for failure to timely submit a proper reply to the non-final Office action mailed March 21, 2007. The non-final Office action set a one month shortened statutory period of time for reply. Notice of Abandonment was mailed October 31, 2007.

Petitioner addresses the instant petition under the provisions of MPEP 711.03(c)IA, which concerns grounds for withdrawal of the holding of abandonment. Petitioner indicates that the "office communication was not received" nor "was not in the file jacket after a search thereof." Petitioner further states that a "search of the docket record where the nonreceived office communication would have entered indicates no entries were made, a copy of the docket report is hereby submitted as documentary proof."

In the absence of any irregularity in the mailing of an Office communication, there is a strong presumption that the Office communication was properly mailed to practitioner at the address of record. This presumption may be overcome by a showing that the Notice was not in fact received. The showing required to establish non-receipt of an Office communication must include a statement from the practitioner stating that the Office communication was not received by the practitioner and attesting to the fact that a search of the file jacket and docket records indicates that the Office communication was not received. A copy

of the docket record where the non-received Office communication would have been entered had it been received and docketed must be attached to and referenced in practitioner's statement. *See*, MPEP 711.03(c). The showing outlined above may not be sufficient if there are circumstances that point to a conclusion that the Office communication may have been lost after receipt rather than a conclusion that the Office communication was lost in the mail.

The arguments and supporting documentation presented have been carefully considered. Moreover, petitioner has included a copy of a docket report covering the time period that a response would have been due had it been received. In view thereof, the evidence presented support the conclusion that the non-final Office action was not received.

In view thereof the Notice of Abandonment is hereby **VACATED** and the holding of abandonment is **WITHDRAWN**.

The application file is being forwarded to Technology Center 2900 further processing of the response to the non-final Office action submitted herewith.

Telephone inquiries concerning this matter may be directed to the undersigned at (571) 272-3205.

Alesia M. Brown
Petitions Attorney
Office of Petitions

UNITED STATES PATENT AND TRADEMARK OFFICE

Commissioner for Patents
United States Patent and Trademark Office
P.O. Box 1450
Alexandria, VA 22313-1450
www.uspto.gov

LAW OFFICE OF PHILIP A STEINER
1212 MARSH STREET
SUITE 3
SAN LUIS OBISPO, CA 93401

COPY MAILED

OCT 2 2 2007

OFFICE OF PETITIONS

In re Application of
Lee Linsley
Application No. 29/246,646
Filed: May 29, 2006
Attorney Docket No. DN04302006

DECISION ON PETITION
TO WITHDRAW
FROM RECORD

This is a decision on the Requests to Withdraw as attorney or agent under 37 C.F.R. § 1.36(b) or 37 C.F.R. § 10.40 filed September 14, 2007 and October 5, 2007.

The request is **APPROVED**.

A grantable request to withdraw as attorney/agent of record must be signed by every attorney/agent seeking to withdraw or contain a clear indication that one attorney is signing on behalf of another/others. A request to withdraw will not be approved unless at least 30 (thirty) days would remain between the date of approval and the later of the expiration date of a time to file a response or the expiration date of the maximum time period which can be extended under 37 C.F.R. § 1.136(a).

The requests were signed by Philip A. Steiner on behalf of all attorneys/agents associated with customer number 31105. All attorneys/agents associated with customer number 31105 have been withdrawn.

The correspondence address of record has been changed and the new correspondence address is the address indicated below.

Applicant is reminded that there is no attorney of record at this time.

There are no outstanding Office actions in this case.

Telephone inquires concerning this decision should be directed to Kimberly Inabinet at 571-272-4618.

Kimberly Inabinet

Kimberly Inabinet
Petitions Examiner
Office of Petitions

cc: Lee Linsley
301 Los Osos Valley Road
Los Osos, CA 93402

UNITED STATES PATENT AND TRADEMARK OFFICE

Commissioner for Patents
United States Patent and Trademark Office
P.O. Box 1450
Alexandria, VA 22313-1450
www.uspto.gov

Patent No. : D572,288
Inventor(s) : Neoh et at
Issued : July 1, 2008
Title : Pan-Tilt Camera Module
Docket No. : AZI 0009 DA-35025-9

Re: Request for Certificate of Correction

Consideration has been given your request for the issuance of a certificate of correction for the above-identified patent under the provisions of 37 CFR 1.322 and/or 1.323.

Assignees' names and addresses (assignment data) printed in a patent are based *solely* on information supplied in the appropriate space for identifying the assignment data, i.e., item 3 of the Fee(s) Transmittal Form PTOL-85B. After payment of the issue fee, correction of assignment data submitted on the PTOL-85B can only be done by Certificate of Correction under 37 CFR 1.323, with a request under 37 CFR 3.81(b).

A request for a patent to be corrected to state the name of the assignee must:

A. state that the assignment was submitted for recordation as set forth in 37 CFR 3.11 before issuance of the patent;
B. include a request for a certificate of correction under 37 CFR 1.323 along with the fee set forth in 37 CFR 1.20(a); and
C. include the processing fee set forth in 37 CFR 1.17(i).

If the request is granted, Certificates of Correction Branch will be notified that a Certificate of Correction may be issued.
See Manual of Patent Examining Procedure, Section 1481.01 (Rev. 3) (Oct. 2005).

Applicant has not included items A and or C above, accordingly, the request for Certificate of Correction to add or change the assignee data is dismissed.
Any request under 37 CFR 3.81(b) should be directed to the following address or facsimile number:

By mail: Mail Stop PETITIONS
Commissioner for Patents
Post Office Box 1450
Alexandria, VA 22313-1450

By hand: Customer Service Window
Mail Stop Petitions
Randolph Building
401 Dulany Street
Alexandria, VA 22314

By fax: 571-273-8300
ATTN: Office of Petitions

If a fee (currently $100) was previously submitted for consideration of a Request for Certificate of Correction, under CFR 1.323, to correct assignment data, no additional fee is required.

RoChaun Johnson
For Mary Diggs
Decisions & Certificates
of Correction Branch
(703) **[703 308-9390 ext 119]** or (703) 305-8309

Monika Hussell
Huntington Square Suite 600
Charleston, West Virginia 25339

[RMJ]_____

UNITED STATES PATENT AND TRADEMARK OFFICE

Commissioner for Patents
United States Patent and Trademark Office
P.O. Box 1450
Alexandria, VA 22313-1450
www.uspto.gov

COPY MAILED

OCT 26 2009

OFFICE OF PETITIONS

DINSMORE & SHOHL LLP
900 LEE STREET
SUITE 600
CHARLESTON, WV, 25301

In re Patent No. D572288 :
Issue Date: July 1, 2008 :
Application No. 29/246,687 : ON PETITION
Filed: May 3, 2006 :
Attorney Docket No. AZI 0009 DA – 35025-9 :

This is a decision on the petition filed June 4, 2009, under 37 CFR 3.81(b)[1] to correct the assignee's name on the front page of the above-identified patent by way of a Certificate of Correction.

The petition is **granted.**

Telephone inquiries concerning this matter may be directed to the undersigned at (571) 272-3210. Any questions concerning the issuance of the Certificate of Correction should be directed to the Certificates of Correction Branch at (703) 305-8309.

This application is being forwarded to the Certificates of Correction Branch for issuance of the requested Certificate of Correction.

Irvin Dingle
Petitions Examiner
Office of Petitions

[1] See Official Gazette of June 22, 2004

IN THE UNITED STATES PATENT AND TRADEMARK OFFICE

In re Patent of

U.S. Patent No. : D572,288
Issued : July 1, 2008
Title : **PAN-TILT CAMERA MODULE**
Docket No. : AZI 0009 DA

MAIL STOP PETITIONS
Commissioner for Patents
P.O. Box 1450
Alexandria, VA 22313-1450

Sir:

PETITION FOR CERTIFICATE OF CORRECTION
OR, MORE PREFERABLY, A REPLACEMENT GRANT

In furtherance of our request filed on September 12, 2008, in the matter of U.S. Patent No. D572,288, it is respectfully requested that a Certificate of Correction be issued (or, more preferably, that a replacement grant be issued) to correct and properly reflect the assignee's name.

An assignment of the underlying patent application for this patent, by the inventors to Azimuth, Inc., was recorded with the USPTO at Reel 017568, Frame 0475, on May 3, 2006 (before issuance of the patent). The applicant submitted the issue fee and the Fee Transmittal Form, inadvertently reciting the name of the wrong assignee (Aplicare, Inc.); the error was discovered on the same day, and a substitute Fee Transmittal Form was immediately submitted to the USPTO, based upon telephonic instructions received by Applicant's counsel. The patent issued with the incorrect assignee (Aplicare, Inc.) as listed on the first filed Fee Transmittal Form, rather than the replacement form.

Although applicant relied upon telephonic instructions from the USPTO, it has submitted the certificate of correction fee under 37 CFR 1.323, and the fee required under 37 CFR 1.17(i) to expedite this matter (both previously paid by credit card on September 12, 2008).

Adjustment date: 10/26/2009 CKHLOK
09/12/2008 INTEFSW 00007605 29246687
01 FC:1811 -100.00 OP
02 FC:1808 -130.00 OP

10/26/2009 CKHLOK 00000012 D572288
01 FC:1811 100.00 OP
02 FC:1464 130.00 OP

It is respectfully requested that a Certificate of Correction (or, more preferably, a replacement grant) be issued for the above-identified patent. One copy of the required Certificate of Correction Form PTO/SB/44 is enclosed.

Respectfully submitted,
DINSMORE & SHOHL LLP

By _____
Monika J. Hussell
Registration No. 37,359

Huntington Square
900 Lee Street, Suite 600
Charleston, West Virginia 25339
Telephone: (304) 357-9924
Facsimile: (304) 357-0919

119454_1

Dinsmore&Shohl LLP
ATTORNEYS

FACSIMILE TRANSMITTAL *from* **MONIKA J. HUSSELL**

June 3, 2009

Direct: 304-357-9924 / Fax: 304-357-0919 / monika.hussell@dinslaw.com

To: RoChaun Johnson

Firm: United States Patent and Trademark Office

Fax Number: 571-270-9754

Patent: U.S. Patent No. D572,288
Issued: July 1, 2008
Title: PAN-TILT CAMERA MODULE
Docket No. AZI0009DA

Pages: 5
(including cover)

Comments: Dear Ms. Johnson,

I had forwarded the attached petition on to you on April 27, 2009, regarding a certificate of correction for the above-referenced patent. I still haven't heard any word on the office's action, and thought I would check in. Unfortunately, the phones are tied up so I thought I would check by facsimile - would you mind to provide me with an update? You can reach me by the fax or phone numbers above.

Sincerely,

Monika J. Hussell

If there are any problems in receiving this transmission, please call the fax room at (304) 357-0900 immediately. Thank you.

Notice

This message is intended only for the use of the individuals or entity to which it is addressed and may contain information that is privileged, confidential, and exempt from disclosure under applicable law. If the reader of this notice is not the intended recipient or the employee or agent responsible for delivering this message to the intended recipient, you are hereby notified that any dissemination, distribution or copying of this communication is strictly prohibited. If you have received this notice in error, please notify us immediately by telephone and return these papers to us at the address below via first class mail.

PAGE 1/5 * RCVD AT 6/3/2009 2:59:03 PM [Eastern Daylight Time] * SVR:USPTO-EFXRF-6/9 * DNIS:2709754 * CSID: * DURATION (mm-ss):01-44

PTO/SB/44 (09-07)
Approved for use through 08/31/2010. OMB 0651-0033
U.S. Patent and Trademark Office; U.S. DEPARTMENT OF COMMERCE
Under the Paperwork Reduction Act of 1995, no persons are required to respond to a collection of information unless it displays a valid OMB control number.
(Also Form PTO-1050)

UNITED STATES PATENT AND TRADEMARK OFFICE
CERTIFICATE OF CORRECTION

PATENT NO. : D572,288

APPLICATION NO.: 29/246,687

ISSUE DATE : July 1, 2008

INVENTOR(S) : Neoh, et al.

It is certified that an error appears or errors appear in the above-identified patent and that said Letters Patent is hereby corrected as shown below:

On the coverpage, item (73), the Assignee should be replaced with the following entity:

AZIMUTH, INC., Morgantown, West Virginia

MAILING ADDRESS OF SENDER (Please do not use customer number below):

This collection of information is required by 37 CFR 1.322, 1.323, and 1.324. The information is required to obtain or retain a benefit by the public which is to file (and by the USPTO to process) an application. Confidentiality is governed by 35 U.S.C. 122 and 37 CFR 1.14. This collection is estimated to take 1.0 hour to complete, including gathering, preparing, and submitting the completed application form to the USPTO. Time will vary depending upon the individual case. Any comments on the amount of time you require to complete this form and/or suggestions for reducing this burden, should be sent to the Chief Information Officer, U.S. Patent and Trademark Office, U.S. Department of Commerce, P.O. Box 1450, Alexandria, VA 22313-1450. DO NOT SEND FEES OR COMPLETED FORMS TO THIS ADDRESS. **SEND TO: Attention Certificate of Corrections Branch, Commissioner for Patents, P.O. Box 1450, Alexandria, VA 22313-1450.**

If you need assistance in completing the form, call 1-800-PTO-9199 and select option 2.

****
*** TX REPORT ***
****

TRANSMISSION OK

TX/RX NO	2888
RECIPIENT ADDRESS	7715712708754#35025008#
DESTINATION ID	
ST. TIME	04/27 10:10
TIME USE	01'11
PAGES SENT	4
RESULT	OK

Dinsmore&Shohl LLP
ATTORNEYS

FACSIMILE TRANSMITTAL

April 27, 2009

from MONIKA J. HUSSELL
Direct: 304-357-9924 / Fax: 304-357-0919 / monika.hussell@dinslaw.com

To: RoChaun Johnson

Firm: United States Patent and Trademark Office

Fax Number: 571-270-9754

Patent: U.S. Patent No. D572,288
Issued: July 1, 2008
Title: PAN-TILT CAMERA MODULE
Docket No.: AZI0009DA

Pages: 4
(Including cover)

Comments: Please find attached our petition, pursuant to your request this morning. As I mentioned, the petition fee was previously paid. Please let me know if you need anything further

If there are any problems in receiving this transmission, please call the fax room at (304) 357-0900 immediately. Thank you.

PTO/SB/27 (09-06)
Approved for use through 03/31/2007. OMB 0651-0031
U.S. Patent and Trademark Office; U.S DEPARTMENT OF COMMERCE
Under the Paperwork Reduction ACT of 1995, no persons are required to respond to collection of information unless it displays a valid OMB control number.

REQUEST FOR EXPEDITED EXAMINATION OF A DESIGN APPLICATION (37 CFR 1.155)

Application Number	29/246,688
Filing Date	May 3, 2006
First Named Inventor	Russell Hurbert Manton
Title	Lockset
Atty Docket Number	RHM019

ADDRESS TO:

MAIL STOP EXPEDITED DESIGN
COMMISSIONER FOR PATENTS
P.O. Box 1450
Alexandria, VA 22313-1450

This is a request for expedited examination of a design application under 37 CFR 1.155.

NOTE: If the Request made by this form accompanies original application papers, include form PTO/SB/18 "Design Patent Application Transmittal" or its equivalent.

A preexamination search was conducted. The field of search was:
D8/300, D8/301, D8/302, D8/330, D8/331, D8/339, D8/341, D8/343, D8/344, D8/346, 292/347, 292/348

70/91, 70/102, 70/129, 70/214

Related applications: 11/466,422, 29/275,845

If not previously filed for the above-identified application, the following items required by 37 CFR 1.155 are enclosed:

- Formal drawings (see 37 CFR 1.84).
- The fee set forth in 37 CFR 1.17(k).
- An information disclosure statement in compliance with 37 CFR 1.98.

Approved
Jacqueline M. Stone, Director
Technology Center 1700/2900
1-18-07

/Robert D. Gunderman, Jr./ — Signature

January 10, 2007 — Date

Robert D. Gunderman, Jr. — Typed or printed name

55,231 — Registration Number, if applicable

585-624-3714 — Telephone Number

WARNING: Information on this form may become public. Credit card information should not be included on this form. Provide credit card information and authorization on PTO-2038.

This collection of information is required by 37 CFR 1.155. The information is required to obtain or retain a benefit by the public which is to file (and by the USPTO to process) an application. Confidentiality is governed by 35 U.S.C. 122 and 37 CFR 1.11 and 1.14. This collection is estimated to take 6 minutes to complete, including gathering, preparing, and submitting the completed application form to the USPTO. Time will vary depending upon the individual case. Any comments on the amount of time you require to complete this form and/or suggestions for reducing this burden, should be sent to the Chief Information Officer, U.S. Patent and Trademark Office, U.S. Department of Commerce, P.O. Box 1450, Alexandria, VA 22313-1450. DO NOT SEND FEES OR COMPLETED FORMS TO THIS ADDRESS. **SEND TO: Commissioner for Patents, P.O. Box 1450, Alexandria, VA 22313-1450.**

If you need assistance in completing the form, call 1-800-PTO-9199 and select option 2.

UNITED STATES PATENT AND TRADEMARK OFFICE

COMMISSIONER FOR PATENTS
UNITED STATES PATENT AND TRADEMARK OFFICE
P.O. BOX 1450
ALEXANDRIA, VA 22313-1450
www.uspto.gov

Robert D. Gunderman, Jr.
Patent Technologies, LLC
150 Lucius Gordon Drive
Suite 205
West Henrietta, NY 14586

MAILED

APR 29 2010

OFFICE OF PETITIONS

In re Russell Hurbert Manton
Application No.: 29/246,688
Filed: May 3, 2006
Patent No.: D545,666
Issued: July 3, 2007

DECISION DISMISSING PETITION

This is a decision on the July 31, 2007 petition titled "Petition to the Director under 37 CFR § 1.181," which requests U.S. Patent No. D545,666 ("the '666 design patent") to be reprinted ("the July 31, 2007 petition").

The July 31, 2007 petition is before the Office of Patent Legal Administration (OPLA) for consideration.

The July 31, 2007 petition is **dismissed**.

The July 31, 2007 petition seeks to have the '666 design patent reprinted because "the drawings as filed in the [application which matured into the '666 design patent] were not properly reproduced in the ['666 design] patent, and do not properly, accurately, or truthfully reflect what was filed by the applicant." According to the July 31, 2007 petition, "[t]he drawings as filed can be seen in PAIR, and do not contain the graininess and pixilated broken line characteristics that were published in the patent."

35 U.S.C. 254 is titled "Certificate of correction of Patent and Trademark Office mistake" and is the sole provider of statutory authority for the Office to issue a corrected patent. It provides: "[w]henever a mistake in a patent, incurred through the fault of the Patent and Trademark Office, is clearly disclosed by the records of the Office, the Director ***may*** issue a certificate of correction ...." (Emphasis added.) The last line of 35 U.S.C. 254 states that "[t]he Director ***may*** issue a corrected patent without charge in lieu of and with like effect as a certificate of correction." (Emphasis added.)

37 CFR 1.322(b) is the regulation implementing 35 U.S.C. 254; it provides:

> If the nature of the ***mistake on the part of the Office*** is such that a certificate of correction is deemed inappropriate in form, the Director ***may*** issue a corrected patent in

> lieu thereof as a more appropriate form for certificate of correction, without expense to the patentee. [Emphasis added.]

Thus, issuance of a corrected patent under 35 U.S.C. 254 and 37 CFR 1.322(b) is reserved for those instances in which the mistake to be corrected in the patent is a mistake on the part of the Office. The Office has no statutory authority to issue a corrected patent for a mistake in a patent that was not a mistake on the part of the Office.

In addition, as explained at MPEP 1480, "[t]he Office ... has discretion under 35 U.S.C. 254 to decline to issue a Certificate of Correction even though an Office mistake exists." It necessarily follows that the Office also has discretion under 35 U.S.C. 254 to decline to issue a corrected patent. MPEP 1480 further provides:

> If Office mistakes are of such a nature that the meaning intended is obvious from the context, the Office may decline to issue a certificate and merely place the correspondence in the patented file, where it serves to call attention to the matter in case any question as to it subsequently arises. Such is the case, even where a correction is requested by the patentee or patentee's assignee.
>
> In order to expedite all proper requests, a Certificate of Correction should be requested only for errors of consequence. Instead of a request for a Certificate of Correction, letters making errors of record should be utilized whenever possible. Thus, where errors are of a minor typographical nature, or are readily apparent to one skilled in the art, a letter making the error(s) of record can be submitted in lieu of a request for a Certificate of Correction.

In the present case, there is no evidence of a mistake in the '666 design patent, let alone a mistake incurred through the fault of the Office. At equal levels of magnification, close examination of the May 8, 2007 nine sheets of drawings in the Image File Wrapper ("IFW") for the '666 design patent and the nine sheets of drawings in the '666 design patent fails to reveal any appreciable difference between the two sets of drawings. In particular, the difference in "graininess and pixilated broken line characteristics" identified in the July 31, 2007 petition is not readily apparent.

Even if the patent owner was able to provide a more detailed showing clearly evidencing a difference in "graininess and pixilated broken line characteristics," such an error would not justify issuance of a certificate of correction, let alone a corrected patent, in the current situation. It is not seen, and the July 31, 2007 petition does not identify, how the asserted difference in "graininess and pixilated broken line characteristics" rises to the level of an error of consequence, i.e., how it impacts the understanding of the invention or the metes and bounds of the subject matter claimed.

For the foregoing reasons, the July 31, 2007 petition is **dismissed**.

It is noted that the July 31, 2007 petition will remain in the IFW for the '666 design patent, where it will serve to call attention to the matter in case any question as to it subsequently arises.

Any inquiry concerning this decision should be directed to Raul Tamayo, Legal Advisor, at (571) 272-7728.

Brian E. Hanlon
Director
Office of Patent Legal Administration
Office of the Deputy Commissioner
for Patent Examination Policy

UNITED STATES PATENT AND TRADEMARK OFFICE

Commissioner for Patents
United States Patent and Trademark Office
P.O. Box 1450
Alexandria, VA 22313-1450
www.uspto.gov

SUTHERLAND ASBILL & BRENNAN LLP
999 PEACHTREE STREET, N.E.
ATLANTA, GA 30309

COPY MAILED

AUG 2 4 2007

OFFICE OF PETITIONS

In re Application of:	:	
Polina et al.	:	DECISION GRANTING
Application No. 29/246698	:	PETITION UNDER
Filing or 371(c) Date: 05/04/2006	:	37 CFR 1.47(a)
Title of Invention:	:	
BOTTLE	:	

This Decision is in response to the Petition Under 37 CFR § 1.47(a)," filed July 14, 2006, to allow the other inventor(s) to proceed with the application on behalf of himself or herself and the nonsigning inventor(s). See, MPEP 409.03. The delay in treating this petition is regretted.

The petition is **granted**.

The above-identified application and papers have been reviewed and found in compliance with 37 CFR 1.47(a). This application is hereby accorded Rule 1.47(a) status.

Petitioner has shown that the non-signing inventor, Jaime G. Polina, refuses to join in the application.

As provided in Rule 1.47(a), this Office will forward notice of this application's filing to the non-signing inventor at the addresses given in the Petition. Notice of the filing of this application will also be published in the Official Gazette.

The application file is being referred to Technology Center Art Unit 2912 for examination in due course.

Telephone inquiries related to this decision may be directed to the undersigned at (571) 272-3232.

Derek L. Woods
Attorney
Office of Petitions

UNITED STATES PATENT AND TRADEMARK OFFICE

Commissioner for Patents
United States Patent and Trademark Office
P.O. Box 1450
Alexandria, VA 22313-1450
www.uspto.gov

MR. JAIME G. POLINA
DOLORES de LADRON de GUEVARA NO. 980
COL. Del NORTE
MONTERREY N.L.
CP 64500
MEXICO

COPY MAILED

AUG 2 4 2007

OFFICE OF PETITIONS

In re Application of:	:	
Polina et al.	:	LETTER
Application No. 29/246698	:	
Filing or 371(c) Date: 05/04/2006	:	
Title of Invention:	:	
BOTTLE	:	

Dear Mr. Polina:

You are named as a joint inventor in the above-identified United States patent application filed under the provisions of 35 U.S.C. 116 (United States Code) and 37 CFR 1.47(a), Rules of Practice in Patent Cases. Should a patent be granted on the application you will be designated therein as a joint inventor.

As a named inventor you are entitled to inspect any paper in the file wrapper of the application, order copies of all or any part thereof (at a prepaid cost per 37 CFR 1.19) or make your position of record in the application. Alternatively, you may arrange to do any of the preceding through a registered patent attorney or agent presenting written authorization from you. If you care to join the application, counsel of record (see below) would presumably assist you. Joining in the application would entail the filing of an appropriate oath or declaration by you pursuant to 37 CFR 1.63.

Telephone inquiries regarding this communication should be directed to the undersigned at (571) 272-3232. Requests for information regarding your application should be directed to the File Information Unit at (703) 308-2733. Information regarding how to pay for and order a copy of the application, or a specific paper in the application, should be directed to Certification Division at (703) 308-9726 or 1-800-972-6382 (outside the Washington D.C. area).

Derek L. Woods
Attorney
Office of Petitions

CC: SUTHERLAND ASBILL & BRENNAN LLP
999 PEACHTREE STREET, N.E.
ATLANTA, GA 30309

UNITED STATES PATENT AND TRADEMARK OFFICE

Commissioner for Patents
United States Patent and Trademark Office
P.O. Box 1450
Alexandria, VA 22313-1450
www.uspto.gov

SUTHERLAND ASBILL & BRENNAN LLP
999 PEACHTREE STREET, N.E.
ATLANTA, GA 30309

COPY MAILED

OCT 0 6 2006

OFFICE OF PETITIONS

In re Application of:	:	
Jaime Garza Polina	:	
Application No. 29/246,699	:	DECISION DISMISSING
Filed: May 4, 2006	:	PETITION UNDER
Title of Invention: BOTTLE	:	37 CFR 1.47(b)

This is in response to a Petition Under 37 CFR 1.47(b), filed July 14, 2006, to allow a person to whom an inventor has assigned or agreed in writing to assign the invention, or who otherwise shows sufficient proprietary interest in the matter justifying such action, to make application on behalf of and as agent for all inventors.

The petition is **dismissed**.

Rule 47 applicant is given TWO (2) MONTHS from the mailing date of this decision to reply, correcting the below-noted deficiencies. Any reply should be entitled "Request for Reconsideration of Petition Under 37 CFR 1.47(b)", and should only address the deficiencies noted below, except that the reply may include an oath or declaration executed by the non-signing inventor. Failure to respond will result in abandonment of the application. Any extensions of time will be governed by 37 CFR 1.136(a).

The above-identified application was filed on May 4, 2006, without an oath or declaration. This Office mailed a Notice to File Missing Parts of Nonprovisional Application (hereinafter "Notice") on June 9, 2006, requiring, *inter alia*, a properly signed oath or declaration and a late filing fee, oath or declaration and surcharge.

In response to the Notice, Applicant files the instant petition and unexecuted Declaration and Power of Attorney.

Applicable Law, Rules and MPEP

A grantable petition under 37 CFR 1.47(b) requires: (1) proof that the non-signing inventor cannot be reached or refuses to sign the oath or declaration after having been presented with the application papers (specification, claims and drawings); (2) an acceptable oath or declaration in compliance with 35 U.S.C. §§ 115 and 116; (3) the petition fee; (4) a statement of the last known address of the non-signing inventor(s); (5) proof of proprietary interest; and (6) proof of irreparable harm. Applicant lacks item (2) as set forth above.

As to item (2), the Office notes that pursuant to Section 409.03(b)(A) of the Manuel for Patent Examining Procedure:

> The 37 CFR 1.47(b) applicant must make the oath required by 37 CFR 1.63 and 1.64 or 1.175. Where a corporation is the 37 CFR 1.47(b) applicant, an officer (President, Vice-President, Secretary, Treasurer, or Chief Executive Officer) thereof should normally sign the necessary oath or declaration. A corporation may authorize any person, including an attorney or agent registered to practice before the U.S. Patent and Trademark Office, to sign the application oath or declaration on its behalf. Where an oath or declaration is signed by a registered attorney or agent on behalf of a corporation, either proof of the attorney's or agent's authority in the form of a statement signed by an appropriate corporate officer must be submitted, or the attorney or agent may simply state that he or she is authorized to sign on behalf of the corporation. Where the oath or declaration is being signed on behalf of an assignee, see MPEP § 324. An inventor may not authorize another individual to act as his or her agent to sign the application oath or declaration on his or her behalf. Staeger v. Commissioner, 189 USPQ 272 (D.D.C. 1976), In re Striker, 182 USPQ 507 (Comm'r Pat. 1973). Where an application is executed by one other than the inventor, the declaration required by 37 CFR 1.63 must state the full name, residence, post office address, and citizenship of the nonsigning inventor. Also, the title or position of the person signing must be stated

if signing on behalf of a corporation under 37 CFR 1.47(b).

Id.

Applicant has not presented an oath or declaration for the patent application in compliance with 37 CFR 1.63 and 37 CFR 1.64. The oath or declaration must identify the inventive entity and title or position of the person signing. A properly executed oath or declaration is required that lists all of the inventors and is signed by the person with authority to sign the declaration on behalf of the company. The title or position of the person signing on behalf of the company must also be included on the declaration.

Further correspondence with respect to this matter should be addressed as follows:

By mail: Mail Stop PETITIONS
Commissioner for Patents
PO Box 1450
Alexandria, VA 22313-1450

By FAX: (571) 273-8300
Attn: Office of Petitions

By hand: Customer Service Window
Randolph Building
401 Dulany Street
Alexandria, VA 22314

Telephone inquiries concerning this matter should be directed to the undersigned at (571) 272-3232.

Derek L. Woods
Attorney
Office of Petitions

UNITED STATES PATENT AND TRADEMARK OFFICE

Commissioner for Patents
United States Patent and Trademark Office
P.O. Box 1450
Alexandria, VA 22313-1450
www.uspto.gov

SUTHERLAND ASBILL & BRENNAN LLP
999 PEACHTREE STREET, N.E.
ATLANTA GA 30309

COPY MAILED

FEB 07 2007

OFFICE OF PETITIONS

In re Application of	:	
Jaime Garza Polina	:	
Application No. 29/246699	:	DECISION GRANTING
Filing or 371(c) Date: 05/04/2006	:	PETITION UNDER
Attorney Docket Number:	:	37 CFR 1.47(b)
25040-1718	:	

This is in response to the Request for Reconsideration of Petition Under 37 C.F.R. § 1.47(b), filed October 24, 2006, to allow a person to whom an inventor has assigned or agreed in writing to assign the invention, or who otherwise shows sufficient proprietary interest in the matter justifying such action, to make application on behalf of and as agent for all inventors.

The petition is **granted**.

The above-identified application and papers have been reviewed and found in compliance with 37 CFR 1.47(b). This application is hereby accorded Rule 1.47(b) status.

Petitioner has shown that the non-signing inventor, Jaime Garza Polina, refuses to join in the application.

As provided in Rule 1.47, this Office will forward notice of this application's filing to the non-signing inventors at the addresses given in the Petition. Notice of the filing of this application will also be published in the Official Gazette.

The application file is being referred to the Office of Initial Patent Examination for continued processing.

Telephone inquiries related to this decision may be directed to the undersigned at (571) 272-3232.

Derek L. Woods
Attorney
Office of Petitions

UNITED STATES PATENT AND TRADEMARK OFFICE

Commissioner for Patents
United States Patent and Trademark Office
P.O. Box 1450
Alexandria, VA 22313-1450
www.uspto.gov

MR. JAMIE G. POLINA.
DELORES de LADRON de GUERVA NO. 980
COL. Del NORTE
MONTERREY N.I. CP 64500
MEXICO

COPY MAILED

FEB 07 2007

OFFICE OF PETITIONS

In re Application of	:	
Jaime Garza Polina	:	
Application No. 29/246699	:	LETTER
Filing or 371(c) Date: 05/04/2006	:	
Attorney Docket Number:	:	
25040-1718	:	

Dear Mr. Polina:

You are named as the inventor in the above-identified United States patent application filed under the provisions of 35 U.S.C. 116 (United States Code) and 37 CFR 1.47(b), Rules of Practice in Patent Cases. Should a patent be granted on the application you will be designated therein as a joint inventor.

As the inventor you are entitled to inspect any paper in the file wrapper of the application, order copies of all or any part thereof (at a prepaid cost per 37 CFR 1.19) or make your position of record in the application. Alternatively, you may arrange to do any of the preceding through a registered patent attorney or agent presenting written authorization from you. If you care to join the application, counsel of record (see below) would presumably assist you. Joining in the application would entail the filing of an appropriate oath or declaration by you pursuant to 37 CFR 1.63.

Telephone inquiries regarding this communication should be directed to the undersigned at (571) 272-3232. Requests for information regarding your application should be directed to the File Information Unit at (703) 308-2733. Information regarding how to pay for and order a copy of the application, or a specific paper in the application, should be directed to Certification Division at (703) 308-9726 or 1-800-972-6382 (outside the Washington D.C. area).

Derek L. Woods
Attorney
Office of Petitions

cc: SUTHERLAND ASBILL & BRENNAN LLP
999 PEACHTREE STREET, N.E.
ATLANTA GA 30309

UNITED STATES PATENT AND TRADEMARK OFFICE

Commissioner for Patents
United States Patent and Trademark Office
P.O. Box 1450
Alexandria, VA 22313-1450
www.uspto.gov

POWELL GOLDSTEIN LLP
ONE ATLANTIC CENTER FOURTEENTH FLOOR
1201 WEST PEACHTREE STREET NW
ATLANTA GA 30309-3488

COPY MAILED

MAR 17 2008

In re Application of :

DEAN, Steve M. :
Application No. 29/246,717 : DECISION ON PETITION
Filed: May 05, 2006 : TO WITHDRAW
Attorney Docket No. **149364.00100** : FROM RECORD
:

This is a decision on the Request to Withdraw as attorney or agent of record under 37 C.F.R. § 1.36(b), filed December 21, 2007.

The request is **APPROVED**.

A grantable request to withdraw as attorney/agent of record must be signed by every attorney/agent seeking to withdraw or contain a clear indication that one attorney is signing on behalf of another/others. A request to withdraw will not be approved unless at least 30 (thirty) days would remain between the date of approval and the later of the expiration date of a time to file a response or the expiration date of the maximum time period which can be extended under 37 C.F.R. § 1.136(a).

The request was signed by Charles Warner. Laurence Colton has been withdrawn as attorney or agent of record; all other attorneys remain of record.

The request to change the correspondence of record is not acceptable as the requested correspondence address is not that of: (1) the first named signing inventor; or (2) an intervening assignee of the entire interest under 37 C.F.R 3.71. All future communications from the Office will be directed to the signing inventor at the first copied address below until otherwise properly notified by the applicant.

Telephone inquiries concerning this decision should be directed to Tredelle Jackson at 571-272-2783.

Monica A. Graves
Petitions Examiner
Office of Petitions

cc: **STEVE M. DEAN**
288 APPALACHIAN TRAIL
MUNFORD, AL 36266

cc: **LAURENCE P. COLTON**
SMITH GAMBRELL & RUSSELL
1230 PEACHTREE STREET, NW
ATLANTA, GA 30309

UNITED STATES PATENT AND TRADEMARK OFFICE

Commissioner for Patents
United States Patent and Trademark Office
P.O. Box 1450
Alexandria, VA 22313-1450
www.uspto.gov

UNILEVER INTELLECTUAL PROPERTY GROUP
700 SYLVAN AVENUE, BLDG C2 SOUTH
ENGLEWOOD CLIFFS NJ 07632-3100

COPY MAILED

JAN 23 2008

OFFICE OF PETITIONS

In re Application of
OKIN, et al.
Application No. 29/246,718
Filed: May 5, 2006
Attorney Docket No. **DM6194(V)**

DECISION ON PETITION

This is a decision on the petition under the unintentional provisions of 37 CFR 1.137(b), filed May 8, 2007, to revive the above-identified application.

The petition is **GRANTED.**

This application became abandoned for failure to timely pay the issue fee on or before April 4, 2007, as required by the Notice of Allowance and Fee(s) Due mailed, January 4, 2007. Accordingly, the date of abandonment of this application is April 5, 2007.

The petition satisfies the requirements of 37 CFR 1.137(b) in that petitioner has supplied (1) the reply in the form of payment of the issue fee of $800; (2) the petition fee of $1500, (3) a proper statement of unintentional delay and (4) a terminal disclaimer and fee as required by 37 CFR 1.137(b).

The terminal disclaimer filed May 8, 2007 has been entered and made of record. Any continuing application filed from this application must contain a copy of the terminal disclaimer. The copy of the terminal disclaimer must be filed with a cover letter requesting the terminal disclaimer be recorded on the continuing application. A copy of this decision should be attached to the cover letter.

Telephone inquiries concerning this decision should be directed to Monica A. Graves at (571) 272-7253.

This application is being referred to the office of Data Management for processing into a patent.

Sherry D. Brinkley
Petitions Examiner
Office of Petitions

UNITED STATES PATENT AND TRADEMARK OFFICE

Commissioner for Patents
United States Patent and Trademark Office
P.O. Box 1450
Alexandria, VA 22313-1450
www.uspto.gov

UNILEVER INTELLECTUAL PROPERTY GROUP
700 SYLVAN AVENUE,
BLDG C2 SOUTH
ENGLEWOOD CLIFFS NJ 07632-3100

COPY MAILED

OCT 0 1 2007

OFFICE OF PETITIONS

In re Application of :
Matthew S. OKIN :
Application No. 29/246,719 : DECISION ON PETITION
Filed: May 05, 2006 :
Attorney Docket No. DM6195(V) :

This is a decision on the petition under 37 CFR 1.137(b), filed May 17, 2007, to revive the above-identified design application.

The petition is **GRANTED**.

The application became abandoned for failure to timely pay the issue fee on or before April 04, 2007, as required by the Notice of Allowance and Fee(s) Due, mailed January 04, 2007, which set a statutory period for reply of three (3) months. Accordingly, the application became abandoned on April 05, 2006. A Notice of Abandonment was mailed on May 01, 2007.

The petition satisfies the requirements of 37 CFR 1.137(b) in that petitioner has supplied (1) the reply in the form of the $800 issue fee, (2) the petition fee of $1500, (3) a proper statement of unintentional delay, and (4) a terminal disclaimer and fee as required by 37 CFR 1.137(d). Accordingly, the failure to timely pay the issue fee as required by the Notice of Allowance and Fee(s) is accepted as being unintentionally delayed.

The terminal disclaimer is accepted and has been made of record. Any continuing application filed from this application must contain a copy of the terminal disclaimer. The copy of the terminal disclaimer must be filed with a cover letter requesting the terminal disclaimer be recorded on the continuing application. A copy of this decision should be attached to the cover letter.

Telephone inquiries concerning this decision should be directed to Tredelle Jackson at (571) 272-2783.

This application is being referred to Publishing Division for further processing in accordance with this decision on petition.

Amelia Au
Petitions Examiner
Office of Petitions

UNITED STATES PATENT AND TRADEMARK OFFICE

Commissioner for Patents
United States Patent and Trademark Office
P.O. Box 1450
Alexandria, VA 22313-1450
www.uspto.gov

BARNES & THORNBURG LLP
11 SOUTH MERIDIAN
INDIANAPOLIS IN 46204

COPY MAILED

DEC 1 1 2007

OFFICE OF PETITIONS

In re Application of :
Thomas J. Meyers et al. :
Application No. 29/246,770 : ON PETITION
Filed: May 9, 2006 :
:

This is a decision on the petition under 37 CFR 1.137(b), filed October 17, 2007, to revive the above-identified application.

The petition is **DISMISSED**.

Any request for reconsideration of this decision must be submitted within TWO (2) MONTHS from the mail date of this decision. Extensions of time under 37 CFR 1.136(a) are permitted. The reconsideration request should include a cover letter entitled "Renewed Petition under 37 CFR 1.137(b)." This is **not** a final agency action within the meaning of 5 U.S.C. § 704.

The above-identified application became abandoned for failure to submit corrected drawings in a timely manner in reply to the Notice of Allowance/Allowability mailed April 6, 2007 which set a statutory period for reply of three (3) months. Accordingly, by operation of law, the above-identified application became abandoned on July 7, 2007.

A grantable petition under 37 CFR 1.137(b) must be accompanied by: (1) the required reply, unless previously filed; (2) the petition fee as set forth in 37 CFR 1.17(m); (3) a statement that the entire delay in filing the required reply from the due date for the reply until the filing of a grantable petition pursuant to 37 CFR 1.137(b) was unintentional; and (4) any terminal disclaimer (and fee as set forth in 37 CFR 1.20(d)) required by 37 CFR 1.137(d). Where there is a question as to whether either the abandonment or the delay in filing a petition under 37 CFR 1.137 was unintentional, the Commissioner may require additional information. See MPEP 711.03(c)(III)(C) and (D). The instant petition lacks item(s) (4). A proper terminal disclaimer is required for all design applications.

It is not apparent whether the person signing the statement of the unintentional delay was in a position to have firsthand knowledge of the facts and circumstances of the delay at issue. Nevertheless, such statement is being treated as having been made as the result of a reasonable inquiry into the facts and circumstances of such delay. See 37 CFR 10.18(b) and Changes to Patent Practice and Procedure; Final rule Notice, 62 Fed. Reg. 53131, 53178 (October 10, 1997), 1203 Off. Gaz. Pat. Office 63, 103 (October 21, 1997). In the event that such an inquiry has not been made, petitioner must make such an inquiry. If such inquiry results in the discovery that it is not correct that the entire delay in filing the required reply from the due date for the reply until the filing of a grantable petition pursuant of 37 CFR 1.137(b) was unintentional, petitioner must notify the Office.

The file does not indicate a change of address has been submitted, although the address given on the petition differs from the address of record. If appropriate, a change of address should be filed in accordance with MPEP 601.03. A courtesy copy of this decision is being mailed to the address given on the petition; however, the office will mail all future correspondence solely to the address of record.

Further correspondence with respect to this matter should be addressed as follows:

By Mail:
Mail Stop PETITION
Commissioner for Patents
P. O. Box 1450
Alexandria, VA 22313-1450

By hand:
U. S. Patent and Trademark Office
Customer Service Window, Mail Stop Petitions
Randolph Building
401 Dulany Street
Alexandria, VA 22314

The centralized facsimile number is **(571) 273-8300.**

Application No. 29/246,770

Telephone inquiries concerning this decision should be directed to the Carl Friedman at (571) 272-6842.

David Bucci
Petitions Examiner
Office of Petitions

Cc: Richard Lazarus
750 17 St. N.W. Suite 900
Washington, D.C. 20006

UNITED STATES PATENT AND TRADEMARK OFFICE

Commissioner for Patents
United States Patent and Trademark Office
P.O. Box 1450
Alexandria, VA 22313-1450
www.uspto.gov

BARNES & THORNBURG LLP
11 SOUTH MERIDIAN
INDIANAPOLIS IN 46204

COPY MAILED

MAY 19 2008

OFFICE OF PETITIONS

In re Application of :
Thomas J. Meyers et al :
Application No.29/246,770 : ON PETITION
Filed: May 9, 2006 :
Attorney Docket No. 20341-200180 :

This is a decision on the renewed petition under 37 CFR 1.137(b), filed January 10, 2008, to revive the above-identified application.

The petition is **DISMISSED**.

Any request for reconsideration of this decision must be submitted within TWO (2) MONTHS from the mail date of this decision. Extensions of time under 37 CFR 1.136(a) are permitted. The reconsideration request should include a cover letter entitled "Renewed Petition under 37 CFR 1.137(b)." This is **not** a final agency action within the meaning of 5 U.S.C. § 704.

The above-identified application became abandoned for failure to submit corrected drawings in a timely manner in reply to the Notice of Allowance/Allowability mailed April 6, 2007 which set a statutory period for reply of three (3) months. Accordingly, by operation of law, the above-identified application became abandoned on July 7, 2007.

A grantable petition under 37 CFR 1.137(b) must be accompanied by: (1) the required reply, unless previously filed; (2) the petition fee as set forth in 37 CFR 1.17(m); (3) a statement that the entire delay in filing the required reply from the due date for the reply until the filing of a grantable petition pursuant to 37 CFR 1.137(b) was unintentional; and (4) any terminal disclaimer (and fee as set forth in 37 CFR 1.20(d)) required by 37 CFR 1.137(d). Where there is a question as to whether either the abandonment or the delay in filing a petition under 37 CFR 1.137 was unintentional, the Commissioner may require additional information. See MPEP 711.03(c)(II)(C) and (D). The renewed petition lacks item (4).

The Petition Decision mailed December 11, 2007 notes that item (4) was missing from the petition filed October 17, 2007. The renewed petition includes a terminal disclaimer and fee. However the disclaimer is signed by Richard B. Lazarus who does not have the authority to do so. Since this is a design application, a terminal disclaimer is required under 37 CFR 1.137(d)(1) which must be in compliance with 37 CFR 1.321. 37 CFR 1.321(a)(1) states that the terminal disclaimer must "Be signed by the patentee, or an attorney or agent of record." A review of the file shows that the above identified application has **NO** attorney or agent of record and thus Mr. Lazarus is not authorized to sign the terminal disclaimer.

Further correspondence with respect to this matter should be addressed as follows:

By Mail:
Mail Stop PETITION
Commissioner for Patents
P. O. Box 1450
Alexandria, VA 22313-1450

By hand:
U. S. Patent and Trademark Office
Customer Service Window, Mail Stop Petitions
Randolph Building
401 Dulany Street
Alexandria, VA 22314

The centralized facsimile number is **(571) 273-8300.**

Telephone inquiries concerning this decision should be directed to the Carl Friedman at (571) 272-6842.

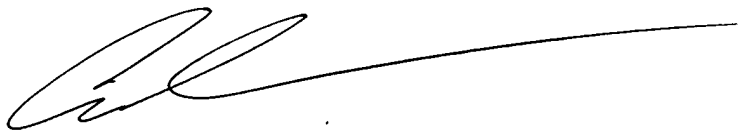

Carl Friedman
Petitions Examiner
Office of Petitions

UNITED STATES PATENT AND TRADEMARK OFFICE

Commissioner for Patents
United States Patent and Trademark Office
P.O. Box 1450
Alexandria, VA 22313-1450
www.uspto.gov

Thomas J. Meyers
164 Cee Jay Drive
Greenwood IN 46142

COPY MAILED

JUL 25 2008

In re Application of	:	
Thomas Meyers et al.	:	
Application No. 29/246,770	:	ON PETITION
Filed: May, 9, 2006	:	
Attorney Docket No. 20341-200180	:	

This is a decision on the second renewed petition under 37 CFR 1.137(b), filed June 20, 2008, to revive the above-identified application.

The petition is **GRANTED**.

The above-identified application became abandoned for failure to submit corrected drawings in a timely manner in reply to the Notice of Allowance/Allowability mailed April 6, 2007, which set a statutory period for reply of three (3) months. Accordingly, by operation of law, the above-identified application became abandoned on July 7, 2007.

The petition decision mailed May 19, 2008 indicates the petition renewed under 37 CFR 1.137(b) filed January 2, 2008 was dismissed as failing to provide a properly signed terminal disclaimer.

The renewed petition includes a properly signed terminal disclaimer.

The renewed petition satisfies the conditions for revival pursuant to the provisions of 37 CFR 1.137(b) in that (1) the reply in the form of corrected drawings; (2) the petition fee of $1,540; (3) the required statement of unintentional delay; and (4) the terminal disclaimer and fee have been received. Accordingly, the corrected drawings are accepted as having been unintentionally delayed.

Telephone inquiries concerning this decision should be directed to Carl Friedman at (571) 272-6842.

The application file is being referred to the Office of Data Management for further processing.

Carl Friedman
Petitions Examiner
Office of Petitions

UNITED STATES PATENT AND TRADEMARK OFFICE

Commissioner for Patents
United States Patent and Trademark Office
P.O. Box 1450
Alexandria, VA 22313-1450
www.uspto.gov

COPY MAILED

AUG 0 4 2009

OFFICE OF PETITIONS

PHILIP K. YU
Room 1201, No. 2, Lane 99, Jiang An Road
Shanghai 20023-3
CHINA

In re Application of :
CHUNG, ALAN :
Application No. 29/246811 : DECISION ON PETITION
Filed: 05/11/2006 :
Attorney Docket No. 998121 PA3 :

This is decision on the petition under 37 CFR 1.137(b), filed March 2, 2009, to revive the above-identified application.

On September 23, 2008, the Office mailed a Notice of Allowability, which set a statutory period of three months to submit corrected drawings. In the apparent absence of a timely filed response, the application became abandoned on December 24, 2008. On January 21, 2009, the Office mailed a Notice of Abandonment.

The petition satisfies the requirements of 37 CFR 1.137(b) in that petitioner has supplied (1) the reply in the form of corrected drawings (2) the petition fee, (3) a proper statement of unintentional delay, and (4) a terminal disclaimer and fee as required by 37 CFR 1.137(d). Accordingly, the failure to timely submit drawings in response to the Notice of Allowability is accepted as being unintentionally delayed.

The terminal disclaimer is accepted and has been made of record.

The application is being referred to the Office of Data Management for issuance of the patent.

Telephone inquiries related to this decision should be directed to the undersigned at (571) 272-3211.

Christina T. Donnell

Christina Tartera Donnell
Senior Petitions Attorney
Office of Petitions

UNITED STATES PATENT AND TRADEMARK OFFICE

Commissioner for Patents
United States Patent and Trademark Office
P.O. Box 1450
Alexandria, VA 22313-1450
www.uspto.gov
DIW Dec-09

HOWARD & HOWARD ATTORNEYS PLLC
450 West Fourth Street
Royal Oak MI 48067

COPY MAILED

DEC 23 2009

OFFICE OF PETITIONS

In re Application of	:	
Kern Koskela et al.	:	
Application Number: 29/246828	:	DECISION ON PETITION
Filing Date: 05/12/2006	:	
Attorney Docket Number:	:	
068181.00049	:	

This is a decision on the petition filed on October 15, 2009, under 37 CFR 1.137(b),[1] to revive the above-identified application.

The petition is **DISMISSED**.

Any request for reconsideration of this decision must be submitted within TWO (2) MONTHS from the mail date of this decision. Extensions of time under 37 CFR 1.136(a) are permitted. The reconsideration request should include a cover

---

[1] Effective December 1, 1997, the provisions of 37 CFR 1.137(b) now provide that where the delay in reply was unintentional, a petition may be filed to revive an abandoned application or a lapsed patent pursuant to 37 CFR 1.137(b). A grantable petition filed under the provisions of 37 CFR 1.137(b) must be accompanied by:

(1) the required reply, unless previously filed. In a nonprovisional application abandoned for failure to prosecute, the required reply may be met by the filing of a continuing application. In a nonprovisional utility or plant application filed on or after June 8, 1995, and abandoned for failure to prosecute, the required reply may also be met by the filing of a request for continuing examination in compliance with § 1.114. In an application or patent, abandoned or lapsed for failure to pay the issue fee or any portion thereof, the required reply must be the payment of the issue fee or any outstanding balance thereof. In an application abandoned for failure to pay the publication fee, the required reply must include payment of the publication fee.

(2) the petition fee as set forth in 37 CFR 1.17(m);

(3) a statement that the entire delay in filing the required reply from the due date for the reply until the filing of a grantable petition pursuant to 37 CFR 1.137(b) was unintentional. The Director may required additional information where there is a question whether the delay was unintentional; and

(4) any terminal disclaimer (and fee as set forth in 37 CFR 1.20(d)) required pursuant to 37 CFR 1.137(c)).

letter entitled "Renewed Petition Under 37 CFR 1.137(b)." This is not a final agency decision.

The application became abandoned on October 10, 2009, for failure to timely submit the issue fee in response to the Notice of Allowance and Fee(s) Due mailed on July 9, 2009, which set a three (3) month statutory period for reply. On October 7, 2009, the PTOL-85(b) Fee Transmittal Form was filed, but the form did not contain counsel's deposit account number or another form of payment. Notice of Abandonment was mailed on October 21, 2009.

On October 15, 2009, the subject petition to revive was filed, along with payment of the issue fee and petition fee.

The petition lacks a terminal disclaimer and fee as required by 37 CFR 1.137(c), which states that any petition to revive pursuant to this section in a design application must be accompanied by a terminal disclaimer and fee as set forth in § 1.321 dedicating to the public a terminal part of the term of any patent granted thereon equivalent to the period of abandonment of the application.

A copy of the terminal disclaimer form is enclosed for petitioner's use.

Further correspondence with respect to this matter should be addressed as follows:

By mail: Mail Stop Petition
Commissioner for Patents
P.O. Box 1450
Alexandria, VA 22313-1450

By FAX: (571) 273-8300
Attn: Office of Petitions

By hand: Customer Service Window
Mail Stop Petition
Randolph Building
401 Dulany Street
Alexandria, VA 22314

Correspondence may also be filed using the EFS-Web system of the USPTO.

Telephone inquiries concerning this matter may be directed to the undersigned at (571)272-3231.

Douglas I. Wood
Senior Petitions Attorney
Office of Petitions

Encl: PTO/SB/63

UNITED STATES PATENT AND TRADEMARK OFFICE

COMMISSIONER FOR PATENTS
UNITED STATES PATENT AND TRADEMARK OFFICE
P.O. BOX 1450
ALEXANDRIA, VA 22313-1450
www.uspto.gov
DIW Apr-10

HOWARD & HOWARD ATTORNEYS PLLC
450 WEST FOURTH STREET
ROYAL OAK MI 48067

MAILED

APR 13 2010

OFFICE OF PETITIONS

In re Application of :
Kern Koskela et al. :
Application Number: 29/246828 : DECISION ON PETITION
Filing Date: 05/12/2006 :
Attorney Docket Number: :
068181.00049 :

This is a decision on the renewed petition filed on January 25, 2010, under 37 CFR 1.137(b),[1] to revive the above-identified application.

The petition is **GRANTED**.

The application became abandoned on October 10, 2009, for failure to timely submit the issue fee in response to the Notice of Allowance and Fee(s) Due mailed on July 9, 2009, which set a three (3) month statutory period for reply. On October 7, 2009, the PTOL-85(b) Fee Transmittal Form was filed, but the form did not contain counsel's deposit account number or another form of

---

[1] Effective December 1, 1997, the provisions of 37 CFR 1.137(b) now provide that where the delay in reply was unintentional, a petition may be filed to revive an abandoned application or a lapsed patent pursuant to 37 CFR 1.137(b). A grantable petition filed under the provisions of 37 CFR 1.137(b) must be accompanied by:

(1) the required reply, unless previously filed. In a nonprovisional application abandoned for failure to prosecute, the required reply may be met by the filing of a continuing application. In a nonprovisional utility or plant application filed on or after June 8, 1995, and abandoned for failure to prosecute, the required reply may also be met by the filing of a request for continuing examination in compliance with § 1.114. In an application or patent, abandoned or lapsed for failure to pay the issue fee or any portion thereof, the required reply must be the payment of the issue fee or any outstanding balance thereof. In an application abandoned for failure to pay the publication fee, the required reply must include payment of the publication fee.

(2) the petition fee as set forth in 37 CFR 1.17(m);

(3) a statement that the entire delay in filing the required reply from the due date for the reply until the filing of a grantable petition pursuant to 37 CFR 1.137(b) was unintentional. The Director may required additional information where there is a question whether the delay was unintentional; and

(4) any terminal disclaimer (and fee as set forth in 37 CFR 1.20(d)) required pursuant to 37 CFR 1.137(c)).

payment. Notice of Abandonment was mailed on October 21, 2009. On October 15, 2009, a petition to revive the application was filed, along with payment of the issue fee and petition fee. On December 23, 2009, the petition was dismissed, for lack of a terminal disclaimer and fee.

On January 25, 2010, the subject request for reconsideration was filed, accompanied by a terminal disclaimer and fee.

The terminal disclaimer filed on January 25, 2010, under 37 CFR 1.137(c) has been entered and made of record. Effective September 8, 2000, 37 CFR 1.137(c)(1) has been added to state that a terminal disclaimer filed pursuant to this rule must dedicate to the public a terminal part of the term of any patent granted thereon equivalent to the lesser of: 1) the period of abandonment of the application; or 2) the period extending beyond twenty years from the date on which the application for patent was filed in the United States, or, if the application contains a specific reference to an earlier filed application(s) under 35 U.S.C. 120, 121, or 365(c).[2] Accordingly, the period of the terminal disclaimer filed on January 25, 2010, will be equivalent to the lesser period (1) or (2), as noted above, for this application.

It is noted that the petition was paid on October 16, 2009. The duplicate petition fee charged on January 25, 2010 is unnecessary and will be credited to counsel's deposit account. Additionally, the publication fee paid on January 25, 2010, will also be credited to counsel's deposit account because payment of the publication fee is not necessary in design applications.[3]

The application is referred to the Office of Data Management for processing into a patent.

Telephone inquiries concerning this matter may be directed to the undersigned at (571)272-3231.

DWood

Douglas I. Wood
Senior Petitions Attorney
Office of Petitions

---

[2] 65 Fed. Reg. 54,674 (2000).

[3] See 35 U.S.C. 122(b)(2)(iv).

PTO/SB/27 (09-04)
Approved for use through 07/31/2006. OMB 0651-0031
U.S. Patent and Trademark Office; U.S. DEPARTMENT OF COMMERCE
Under the Paperwork Reduction Act of 1995, no persons are required to respond to a collection of information unless it displays a valid OMB control number.

REQUEST FOR EXPEDITED EXAMINATION OF A DESIGN APPLICATION (37 CFR 1.155)

Application Number	TBA 29/246 852
Filing Date	May 16, 2006
First Named Inventor	Derek Campbell
Title	PORTION OF A SHOE UPPER
Atty Docket Number	015127.00730

ADDRESS TO:
MAIL STOP EXPEDITED DESIGN
COMMISSIONER FOR PATENTS
P.O. Box 1450
Alexandria, VA 22313-1450

This is a request for expedited examination of a design application under 37 CFR 1.155.

NOTE: If the Request made by this form accompanies original application papers, include form PTO/SB/18 "Design Patent Application Transmittal" or its equivalent.

A preexamination search was conducted. The field of search was:

D2, Subclasses 896, 902, 907, 908, 943, 944, 945, 946, 969, 972, 973, 974

Related applications: ____

If not previously filed for the above-identified application, the following items required by 37 CFR 1.155 are enclosed:
Formal drawings (see 37 CFR 1.84).
The fee set forth in 37 CFR 1.17(k).
An information disclosure statement in compliance with 37 CFR 1.98.

5.26.06
Approved
Jacqueline M. Stone
Jacqueline M. Stone, Director
Technology Center 1700/2900

/H. Wayne Porter/ — Signature

May 16, 2006 — Date

H. Wayne Porter — Typed or printed name

42,084 — Registration Number, if applicable

202-824-3000 — Telephone Number

WARNING: Information on this form may become public. Credit card information should not be included on this form. Provide credit card information and authorization on PTO-2038.

This collection of information is required by 37 CFR 1.155. The information is required to obtain or retain a benefit by the public which is to file (and by the USPTO to process) an application. Confidentiality is governed by 35 U.S.C. 122 and 37 CFR 1.11 and 1.14. This collection is estimated to take 6 minutes to complete, including gathering, preparing, and submitting the completed application form to the USPTO. Time will vary depending upon the individual case. Any comments on the amount of time you require to complete this form and/or suggestions for reducing this burden, should be sent to the Chief Information Officer, U.S. Patent and Trademark Office, U.S. Department of Commerce, P.O. Box 1450, Alexandria, VA 22313-1450. DO NOT SEND FEES OR COMPLETED FORMS TO THIS ADDRESS. **SEND TO: Mail Stop Expedited Design, Commissioner for Patents, P.O. Box 1450, Alexandria, VA 22313-1450.**
If you need assistance in completing the form, call 1-800-PTO-9199 and select option 2.

PTO/SB/27 (09-04)
Approved for use through 07/31/2006. OMB 0651-0031
U.S. Patent and Trademark Office: U.S. DEPARTMENT OF COMMERCE
Under the Paperwork Reduction Act of 1995, no persons are required to respond to a collection of information unless it displays a valid OMB control number.

REQUEST FOR EXPEDITED EXAMINATION OF A DESIGN APPLICATION (37 CFR 1.155)

Application Number	29/246 855
Filing Date	May 16, 2006
First Named Inv ntor	John Hlavacs
Title	Portion of a Shoe Upper
Atty Docket Number	015127.00731

ADDRESS TO:
MAIL STOP EXPEDITED DESIGN
COMMISSIONER FOR PATENTS
P.O. Box 1450
Alexandria, VA 22313-1450

Approved 6-6-06
Jacqueline M. Stone
Jacqueline M. Stone, Director
Technology Center 1700/2900

This is a request for expedited examination of a design application under 37 CFR 1.155.

NOTE: If the Request made by this form accompanies original application papers, include form PTO/SB/18 "Design Patent Application Transmittal" or its equivalent.

A preexamination search was conducted. The field of search was:

D2, subclass 896, 902, 907, 908, 910, 911, 943, 944, 945, 946, 969, 972, 973, 974

Related applications: _____

If not previously filed for the above-identified application, the following items required by 37 CFR 1.155 are enclosed:
Formal drawings (see 37 CFR 1.84).
The fee set forth in 37 CFR 1.17(k).
An information disclosure statement in compliance with 37 CFR 1.98.

/H. Wayne Porter/ — Signature

May 16, 2006 — Date

H. Wayne Porter — Typed or printed name

42,084 — Registration Number, if applicable

202-824-3000 — Telephone Number

WARNING: Information on this form may become public. Credit card information should not be included on this form. Provide credit card information and authorization on PTO-2038.

This collection of information is required by 37 CFR 1.155. The information is required to obtain or retain a benefit by the public which is to file (and by the USPTO to process) an application. Confidentiality is governed by 35 U.S.C. 122 and 37 CFR 1.11 and 1.14. This collection is estimated to take 6 minutes to complete, including gathering, preparing, and submitting the completed application form to the USPTO. Time will vary depending upon the individual case. Any comments on the amount of time you require to complete this form and/or suggestions for reducing this burden, should be sent to the Chief Information Officer, U.S. Patent and Trademark Office, U.S. Department of Commerce, P.O. Box 1450, Alexandria, VA 22313-1450. DO NOT SEND FEES OR COMPLETED FORMS TO THIS ADDRESS. **SEND TO: Mail Stop Expedited Design, Commissioner for Patents, P.O. Box 1450, Alexandria, VA 22313-1450.**
If you need assistance in completing the form, call 1-800-PTO-9199 and select option 2.

PTO/SB/27 (09-04)
Approved for use through 07/31/2006. OMB 0651-0031
U.S. Patent and Trademark Office; U.S. DEPARTMENT OF COMMERCE
Under the Paperwork Reduction Act of 1995, no persons are required to respond to a collection of information unless it displays a valid OMB control number.

REQUEST FOR EXPEDITED EXAMINATION OF A DESIGN APPLICATION (37 CFR 1.155)

Application Number	29/246 858
Filing Date	May 16, 2006
First Named Inventor	Kenneth Link
Title	Portion of a Shoe Upper
Atty Docket Number	015127.00732

ADDRESS TO:
MAIL STOP EXPEDITED DESIGN
COMMISSIONER FOR PATENTS
P.O. Box 1450
Alexandria, VA 22313-1450

Approved 6-6-06
Jacqueline M. Stone
Jacqueline M. Stone, Director
Technology Center 1700/2900

This is a request for expedited examination of a design application under 37 CFR 1.155.

NOTE: If the Request made by this form accompanies original application papers, include form PTO/SB/18 "Design Patent Application Transmittal" or its equivalent.

A preexamination search was conducted. The field of search was:

D2, subclass 896, 902, 907, 908, 910, 911, 943, 944, 945, 946, 969, 972, 973, 974

Related applications: _____

If not previously filed for the above-identified application, the following items required by 37 CFR 1.155 are enclosed:
Formal drawings (see 37 CFR 1.84).
The fee set forth in 37 CFR 1.17(k).
An information disclosure statement in compliance with 37 CFR 1.98.

/H. Wayne Porter/ — Signature

May 16, 2006 — Date

H. Wayne Porter — Typed or printed name

42,084 — Registration Number, if applicable

202-824-3000 — Telephone Number

WARNING: Information on this form may become public. Credit card information should not be included on this form. Provide credit card information and authorization on PTO-2038.

This collection of information is required by 37 CFR 1.155. The information is required to obtain or retain a benefit by the public which is to file (and by the USPTO to process) an application. Confidentiality is governed by 35 U.S.C. 122 and 37 CFR 1.11 and 1.14. This collection is estimated to take 6 minutes to complete, including gathering, preparing, and submitting the completed application form to the USPTO. Time will vary depending upon the individual case. Any comments on the amount of time you require to complete this form and/or suggestions for reducing this burden, should be sent to the Chief Information Officer, U.S. Patent and Trademark Office, U.S. Department of Commerce, P.O. Box 1450, Alexandria, VA 22313-1450. DO NOT SEND FEES OR COMPLETED FORMS TO THIS ADDRESS. **SEND TO: Mail Stop Expedited Design, Commissioner for Patents, P.O. Box 1450, Alexandria, VA 22313-1450.**
If you need assistance in completing the form, call 1-800-PTO-9199 and select option 2.

UNITED STATES PATENT AND TRADEMARK OFFICE

Commissioner for Patents
United States Patent and Trademark Office
P.O. Box 1450
Alexandria, VA 22313-1450
www.uspto.gov

BLACKWELL SANDERS PEPER MARTIN LLP
720 OLIVE STREET
SUITE 2400
ST. LOUIS MO 63101

COPY MAILED
OCT 12 2006
OFFICE OF PETITIONS

In re Application of :
Chen Huxiong ::
Application No. 29/246,862 :
Attorney Docket No. 715382.15 :

DECISION ON PETITION
TO MAKE SPECIAL
37 CFR 1.102(d)

This is a decision on the petition under 37 CFR 1.102(d), filed August 15, 2006, to make the above-identified application special.

The petition requests that the above-identified application be made special under the accelerated examination procedure set forth in M.P.E.P. 708.02, Section II: Infringement.

The petition is **GRANTED**

A grantable petition to make an application special under 37 CFR 1.102(d), MPEP 708.02, Section II: Infringement, must be accompanied by the required fee pursuant to 37 CFR 1.17(h) and a statement by the applicant, assignee or attorney/agent registered to practice before the Office alleging:

(A) That there is an infringing device or product actually on the market or method in use;

(B) That a rigid comparison of the alleged infringing device, product, or method with the claims of the application has been made, and that, in his or her opinion, some of the claims are unquestionably infringed; and

(C) That he or she has made or caused to be made a careful and thorough search of the prior art or has a good knowledge of the pertinent prior art.

Applicant must provide one copy of each of the references deemed most closely related to the subject matter encompassed by the claims if said references are not already of record.

The petitioner meets all the above-listed requirements.

Telephone inquiries concerning this decision should be directed to Mikhail Kornakov at (571) 272-1303 or in his absence, the undersigned at (571) 272-7099.

All other inquiries concerning either the examination or status of the application should be directed to the Technology Center.

The application file is being referred to Technology Center AU 2913 for expedited prosecution.

David A. Bucci
Petitions Examiner
Office of Petitions

UNITED STATES PATENT AND TRADEMARK OFFICE

Commissioner for Patents
United States Patent and Trademark Office
P.O. Box 1450
Alexandria, VA 22313-1450
www.uspto.gov

DENNIS T. GRIGGS
17950 PRESTON ROAD
SUITE 1000
DALLAS, TX 75252

COPY MAILED

NOV 30 2006

OFFICE OF PETITIONS

In re Application of :
Joseph E. Glatz :
Application No. 29/246,881 : DECISION ON PETITION
Filed: May 18, 2006 : TO MAKE SPECIAL UNDER
Attorney Docket No. D381.1708.5530 : 37 CFR 1.102(c)(1)
:

This is a decision on the petition under 37 CFR 1.102(c)(1), filed May 18, 2006, to make the above-identified application special based on applicant's age as set forth in M.P.E.P. § 708.02, Section IV.

The petition is **GRANTED**.

A grantable petition to make an application special under 37 CFR 1.102(c)(1) and MPEP § 708.02, Section IV: Applicant's Age must be accompanied by evidence showing that at least one of the applicants is 65 years of age, or more, such as a birth certificate or a statement by applicant. No fee is required

The instant petition includes a statement from Inventor Joseph E. Glatz stating that he is over 65 years of age. Accordingly, the above-identified application has been accorded "special" status.

Telephone inquiries concerning this decision should be directed to Irvin Dingle at 571-272-3210.

All other inquiries concerning either the examination or status of the application should be directed to the Technology Center.

The application is being forwarded to the Technology Center Art Unit 2912 for action on the merits commensurate with this decision.

Irvin Dingle
Petitions Examiner
Office of Petitions

UNITED STATES PATENT AND TRADEMARK OFFICE

Commissioner for Patents
United States Patent and Trademark Office
P.O. Box 1450
Alexandria, VA 22313-1450
www.uspto.gov

WORKMAN NYDEGGER
60 EAST SOUTH TEMPLE
1000 EAGLE GATE TOWER
SALT LAKE CITY UT 84111

COPY MAILED

NOV 1 4 2007

OFFICE OF PETITIONS

In re Application of	:	
Bruce Raile	:	
Application No. 29/246,909	:	DECISION DISMISSING PETITION
Filed: May 19, 2006	:	UNDER 37 CFR 1.313(c)(2)
Attorney Docket No. 14301.54.1	:	

This is a decision on the petition filed November 12, 2007 entitled " PETITION TO WITHDRAW UNDER 37 CFR 1.313(c)(2)," to withdraw the above application from issue after payment of the issue fee. Petitioner is advised that 37 CFR 1.313(c)(2) does not apply to design applications.

The petition is **DISMISSED AS MOOT**.

Unfortunately, the petition was not referred to the appropriate deciding official for decision until after the issuance of this application into a patent. However, petitioner's attention is directed to 37 CFR 1.313(d), which states:

> A petition under this section will not be effective to withdraw the application from issue unless it is actually received and granted by the appropriate officials **before the date of issue**. (Emphasis added)

In this case, the petition was not received in the Office of Petitions for consideration until November 13, 2007. Therefore, as the case has now issued, the petition to withdraw from issue cannot be granted.

Accordingly, the $130 petition fee is unnecessary and will be refunded in due course.

Petitioner is advised, that while petitions to withdraw from issue may be mailed to the Commissioner for Patents, as was done in this case, applicants were cautioned to hand carry or fax petitions to withdraw from issue directly to the Office of Petitions. *See* MPEP § 1308.

Telephone inquiries should be directed to the undersigned at (571) 272-3208.

Karen Creasy
Petitions Examiner
Office of Petitions

PTO/SB/27 (05-03)
Approved for use through 04/30/2003. OMB 0651-0031
U.S. Patent and Trademark Office; U.S. DEPARTMENT OF COMMERCE
Under the Paperwork Reduction Act of 1995, no persons are required to respond to a collection of information unless it displays a valid OMB control number.

REQUEST FOR EXPEDITED EXAMINATION OF A DESIGN APPLICATION (37 CFR 1.155)

Application Number	29/246,918
Filing Date	May 19, 2006
First Named Inventor	Bo Stefan Andren/
Title	Portion of a Wrist Band
Atty Docket Number	015127.00769

USPTO
AUG 11 2006
PATENT & TRADEMARK OFFICE

HAND DELIVER TO THE DESIGN GROUP DIRECTOR'S OFFICE
-or- ADDRESS TO:
MAIL STOP EXPEDITED DESIGN
COMMISSIONER FOR PATENTS
P.O. Box 1450
Alexandria, VA 22313-1450

This is a request for expedited examination of a design application under 37 CFR 1.155.

NOTE: If the Request made by this form accompanies original application papers, include form PTO/SB/18 "Design Patent Application Transmittal" or its equivalent.

A preexamination search was conducted. The field of search was:

D11/ 1, 2, 3, 4, 5, 6, 7, 8, 9, 10, 11, 12, 13, 14, 15, 16, 17, 18, 19, 20, 21, 22, 23, 24, 25, 26, 27, 28, 29

D2/610

63/ 3, 15

2/162

Related applications: 29/246,919 and 29/246,920

8-22-06
Approved
Jacqueline M. Stone
Jacqueline M. Stone, Director
Technology Center 1700/2900

If not previously filed for the above-identified application, the following items required by 37 CFR 1.155 are enclosed:

The fee set forth in 37 CFR 1.17(k).

An information disclosure statement in compliance with 37 CFR 1.98.

August 11, 2006
Date

Signature

202-824-3000
Telephone Number

Darrell G. Mottley, Reg. No. 42,912
Typed or printed name

08/14/2006 HALI11 00000024 190733 29246918
05 FC:1802 900.00 DA

WARNING: Information on this form may become public. Credit card information should not be included on this form. Provide credit card information and authorization on PTO-2038.

This collection of information is required by 37 CFR 1.155. The information is required to obtain or retain a benefit by the public which is to file (and by the USPTO to process) an application. Confidentiality is governed by 35 U.S.C. 122 and 37 CFR 1.14. This collection is estimated to take 6 minutes to complete, including gathering, preparing, and submitting the completed application form to the USPTO. Time will vary depending upon the individual case. Any comments on the amount of time you require to complete this form and/or suggestions for reducing this burden, should be sent to the Chief Information Officer, U.S. Patent and Trademark Office, U.S. Department of Commerce, P.O. Box 1450, Alexandria, VA 22313-1450. DO NOT SEND FEES OR COMPLETED FORMS TO THIS ADDRESS. SEND TO: Mail Stop Expedited Design, Commissioner for Patents, P.O. Box 1450, Alexandria, VA 22313-1450.

If you need assistance in completing the form, call 1-800-PTO-9199 and select option 2.

PTO/SB/27 (05-03)
Approved for use through 04/30/2003. OMB 0651-0031
U.S. Patent and Trademark Office; U.S. DEPARTMENT OF COMMERCE
Under the Paperwork Reduction Act of 1995, no persons are required to respond to a collection of information unless it displays a valid OMB control number.

JPE 1700 AUG 11 2006 PATENT & TRADEMARK OFFICE

REQUEST FOR EXPEDITED EXAMINATION OF A DESIGN APPLICATION (37 CFR 1.155)

Application Number	29/246,919
Filing Date	May 19, 2006
First Named Inventor	Bo Stefan Andren
Title	Portion of a Wrist Band
Atty Docket Number	015127.00770

HAND DELIVER TO THE DESIGN GROUP DIRECTOR'S OFFICE
-or- ADDRESS TO:
MAIL STOP EXPEDITED DESIGN
COMMISSIONER FOR PATENTS
P.O. Box 1450
Alexandria, VA 22313-1450

12-4-06
Approved
Jacqueline M. Stone
Jacqueline M. Stone, Director
Technology Center 1700/2900

This is a request for expedited examination of a design application under 37 CFR 1.155.

NOTE: If the Request made by this form accompanies original application papers, include form PTO/SB/18 "Design Patent Application Transmittal" or its equivalent.

A preexamination search was conducted. The field of search was:

D11/ 1, 2, 3, 4, 5, 6, 7, 8, 9, 10, 11, 12, 13, 14, 15, 16, 17, 18, 19, 20, 21, 22, 23, 24, 25, 26, 27, 28, 29

D2/610

63/ 3, 15

2/162

Related applications: 29/246,918 and 29/246,920

If not previously filed for the above-identified application, the following items required by 37 CFR 1.155 are enclosed:

The fee set forth in 37 CFR 1.17(k).

An information disclosure statement in compliance with 37 CFR 1.98.

August 11, 2006
Date

Signature

202-824-3000
Telephone Number

Darrell G. Mottley, Reg. No. 42,912
Typed or printed name

08/14/2006 HALI11 00000027 198733 29246919
05 FC:1402 999.00 DA

WARNING: Information on this form may become public. Credit card information should not be included on this form. Provide credit card information and authorization on PTO-2038.

This collection of information is required by 37 CFR 1.155. The information is required to obtain or retain a benefit by the public which is to file (and by the USPTO to process) an application. Confidentiality is governed by 35 U.S.C. 122 and 37 CFR 1.14. This collection is estimated to take 6 minutes to complete, including gathering, preparing, and submitting the completed application form to the USPTO. Time will vary depending upon the individual case. Any comments on the amount of time you require to complete this form and/or suggestions for reducing this burden, should be sent to the Chief Information Officer, U.S. Patent and Trademark Office, U.S. Department of Commerce, P.O. Box 1450, Alexandria, VA 22313-1450. DO NOT SEND FEES OR COMPLETED FORMS TO THIS ADDRESS. SEND TO: Mail Stop Expedited Design, Commissioner for Patents, P.O. Box 1450, Alexandria, VA 22313-1450.

If you need assistance in completing the form, call 1-800-PTO-9199 and select option 2.

PTO/SB/27 (05-03)
Approved for use through 04/30/2003. OMB 0651-0031
U.S. Patent and Trademark Office; U.S. DEPARTMENT OF COMMERCE
Under the Paperwork Reduction Act of 1995, no persons are required to respond to a collection of information unless it displays a valid OMB control number.

REQUEST FOR EXPEDITED EXAMINATION OF A DESIGN APPLICATION (37 CFR 1.155)

Application Number	29/246,920
Filing Date	May 19, 2006
First Named Inventor	Bo Stefan Andren/
Title	Portion of a Wrist Band
Atty Docket Number	015127.00771

OIPE
AUG 11 2006
PATENT & TRADEMARK OFFICE

HAND DELIVER TO THE DESIGN GROUP DIRECTOR'S OFFICE
-or- ADDRESS TO:
MAIL STOP EXPEDITED DESIGN
COMMISSIONER FOR PATENTS
P.O. Box 1450
Alexandria, VA 22313-1450

This is a request for expedited examination of a design application under 37 CFR 1.155.

NOTE: If the Request made by this form accompanies original application papers, include form PTO/SB/18 "Design Patent Application Transmittal" or its equivalent.

A preexamination search was conducted. The field of search was:

D11/ 1, 2, 3, 4, 5, 6, 7, 8, 9, 10, 11, 12, 13, 14, 15, 16, 17, 18, 19, 20; 21, 22, 23, 24, 25, 26, 27, 28, 29

D2/610

63/ 3, 15

2/162

Related applications: 29/246,919 and 29/246,918

If not previously filed for the above-identified application, the following items required by 37 CFR 1.155 are enclosed:

The fee set forth in 37 CFR 1.17(k).

An information disclosure statement in compliance with 37 CFR 1.98.

8-22-06
Approved
Jacqueline M. Stone
Jacqueline M. Stone, Director
Technology Center 1700/2900

August 11, 2006
Date

Signature

202-824-3000
Telephone Number

Darrell G. Mottley, Reg. No. 42,912
Typed or printed name

08/14/2006 HALI11 00000028 198733 29246920
01 FC:1402

WARNING: Information on this form may become public. Credit card information should not be included on this form. Provide credit card information and authorization on PTO-2038.

This collection of information is required by 37 CFR 1.155. The information is required to obtain or retain a benefit by the public which is to file (and by the USPTO to process) an application. Confidentiality is governed by 35 U.S.C. 122 and 37 CFR 1.14. This collection is estimated to take 6 minutes to complete, including gathering, preparing, and submitting the completed application form to the USPTO. Time will vary depending upon the individual case. Any comments on the amount of time you require to complete this form and/or suggestions for reducing this burden, should be sent to the Chief Information Officer, U.S. Patent and Trademark Office, U.S. Department of Commerce, P.O. Box 1450, Alexandria, VA 22313-1450. DO NOT SEND FEES OR COMPLETED FORMS TO THIS ADDRESS. SEND TO: **Mail Stop Expedited Design, Commissioner for Patents, P.O. Box 1450, Alexandria, VA 22313-1450.**

If you need assistance in completing the form, call 1-800-PTO-9199 and select option 2.

PTO/SB/27 (09-04)
Approved for use through 07/31/2006. OMB 0651-0031
U.S. Patent and Trademark Office; U.S DEPARTMENT OF COMMERCE
Under the Paperwork Reduction ACT of 1995, no persons are required to respond to collection of information unless it displays a valid OMB control number.

REQUEST FOR EXPEDITED EXAMINATION OF A DESIGN APPLICATION (37 CFR 1.155)

Application Number	29/246 921
Filing Date	
First Named Inventor	Johnson
Title	Lantern
Atty Docket Number	1253-201

ADDRESS TO:

MAIL STOP EXPEDITED DESIGN
COMMISSIONER FOR PATENTS
P.O. Box 1450
Alexandria, VA 22313-1450

This is a request for expedited examination of a design application under 37 CFR 1.155.

NOTE: If the Request made by this form accompanies original application papers, include form PTO/SB/18 "Design Patent Application Transmittal" or its equivalent.

A preexamination search was conducted. The field of search was:

362/158, 183, 186, 192, 194, 382, 410, 414, 416, and 640

D26/37, 40, 72, and 93

F21L 4/00, 4/08, 13/00, 13/04, and 19/00

Related applications: N/A

If not previously filed for the above-identified application, the following items required by 37 CFR 1.155 are enclosed:

- Formal drawings (see 37 CFR 1.84).
- The fee set forth in 37 CFR 1.17(k).
- An information disclosure statement in compliance with 37 CFR 1.98.

Approved 6-6-06
Jacqueline M. Stone
Jacqueline M. Stone, Director
Technology Center 1700/2900

Signature

May 18, 2006
Date

Rochelle Lieberman
Typed or printed name

39,276
Registration Number, if applicable

(301) 948-7775
Telephone Number

WARNING: Information on this form may become public. Credit card information should not be included on this form. Provide credit card information and authorization on PTO-2038.

This collection of information is required by 37 CFR 1.155. The information is required to obtain or retain a benefit by the public which is to file (and by the USPTO to process) an application. Confidentiality is governed by 35 U.S.C. 122 and 37 CFR 1.11 and 1.14. This collection is estimated to take 6 minutes to complete, including gathering, preparing, and submitting the completed application form to the USPTO. Time will vary depending upon the individual case. Any comments on the amount of time you require to complete this form and/or suggestions for reducing this burden, should be sent to the Chief Information Officer, U.S. Patent and Trademark Office, U.S. Department of Commerce, P.O. Box 1450, Alexandria, VA 22313-1450. DO NOT SEND FEES OR COMPLETED FORMS TO THIS ADDRESS. **SEND TO: Commissioner for Patents, P.O. Box 1450, Alexandria, VA 22313-1450.**

If you need assistance in completing the form, call 1-800-PTO-9199 and select option 2.

OFF
MAY 23 2006
PATENT & TRADEMARK OFFICE

PTO/SB/27 (05-03)
Approved for use through 04/30/2003. OMB 0651-0031
U.S. Patent and Trademark Office; U.S. DEPARTMENT OF COMMERCE
Under the Paperwork Reduction Act of 1995, no persons are required to respond to a collection of information unless it displays a valid OMB control number

REQUEST FOR EXPEDITED EXAMINATION OF A DESIGN APPLICATION (37 CFR 1.155)

Application Number	29/246,961
Filing Date	May 23, 2006
First Named Inv ntor	Tetsuya T. Minami
Title	Portion Of A Shoe Upper
Atty Docket Number	015127.00734

HAND DELIVER TO THE DESIGN GROUP DIRECTOR'S OFFICE
-or- ADDRESS TO:
MAIL STOP EXPEDITED DESIGN
COMMISSIONER FOR PATENTS
P.O. Box 1450
Alexandria, VA 22313-1450

This is a request for expedited examination of a design application under 37 CFR 1.155.

NOTE: If the Request made by this form accompanies original application papers, include form PTO/SB/18 "Design Patent Application Transmittal" or its equivalent.

A preexamination search was conducted. The field of search was:

D2/896, 902, 907, 908, 943, 944, 945, 946, 969, 972, 973 and 974

Related applications: U.S. Serial No. 29/246,963 filed 5/23/06 - (Atty. Dkt. No. 015127.00735)

If not previously filed for the above-identified application, the following items required by 37 CFR 1.155 are enclosed:

Formal drawings (see 37 CFR 1.84).

The fee set forth in 37 CFR 1.17(k).

An information disclosure statement in compliance with 37 CFR 1.98.

6-6-06
Approved
Jacqueline M. Stone
Jacqueline M. Stone, Director
Technology Center 1700

May 23, 2006
Date

Darrell G. Mottley
Signature

202-824-3000
Telephone Number

Darrell G. Mottley, Reg. No. 42,912
Typed or printed name

WARNING: Information on this form may become public. Credit card information should not be included on this form. Provide credit card information and authorization on PTO-2038.

05/05/2006 198733 29246961
01 FC:1802 900.00 DA

This collection of information is required by 37 CFR 1.155. The information is required to obtain or retain a benefit by the public which is to file (and by the USPTO to process) an application. Confidentiality is governed by 35 U.S.C. 122 and 37 CFR 1.14. This collection is estimated to take 6 minutes to complete, including gathering, preparing, and submitting the completed application form to the USPTO. Time will vary depending upon the individual case. Any comments on the amount of time you require to complete this form and/or suggestions for reducing this burden, should be sent to the Chief Information Officer, U.S. Patent and Trademark Office, U.S. Department of Commerce, P.O. Box 1450, Alexandria, VA 22313-1450. DO NOT SEND FEES OR COMPLETED FORMS TO THIS ADDRESS. SEND TO: Mail Stop Expedited Design, Commissioner for Patents, P.O. Box 1450, Alexandria, VA 22313-1450.

If you need assistance in completing the form, call 1-800-PTO-9199 and select option 2.

UNITED STATES PATENT AND TRADEMARK OFFICE

Commissioner for Patents
United States Patent and Trademark Office
P.O. Box 1450
Alexandria, VA 22313-1450
www.uspto.gov

2-26-08

Patent No. : D534,342
Ser. No. : 29/246,961
Inventor(s) : Tetsuya T. Minami
Issued : January 2, 2007
Title : PORTION OF A SHOE UPPER
Docket No. : 015127.00734

Re: Request for Certificate of Correction

Consideration has been given your request for the issuance of a certificate of correction for the above-identified patent under the provisions of Rule(s) 1.322 or 1.323.

Assignees' names and addresses (assignment data) printed in a patent, are based *solely* on information supplied in the appropriate space for identifying the assignment data, i.e., item 3 of the Issue Fee Transmittal Form PTOL-85B. Granting of a request under 37 CFR 3.81(b) is required to correct applicant's error providing ***incorrect or erroneous*** assignment data, *before* issuance of a Certificate of Correction, under 37 CFR 1.323 *(see Manual of Patent Examining Procedures (M.P.E.P) Chp.1400, sect. 1481).* This procedure is required *at any time after the issue fee is paid*, including after issuance of the patent.

In view of the foregoing, your request is hereby denied.

A request to correct the Assignee under 37 CFR 3.81(b) should include:

A. **the processing fee set forth in 37 CFR 1.117(h) (currently $130);**
B. a statement that the failure to include the correct assignee name on the PTOL-85B was inadvertent; and
C. a copy of the Notice of Recordation of Assignment Document, reflecting the reel and frame number where the assignment(s) is recorded and/or reflecting proof of *the date* the assignment was submitted for recordation.

In the Request, Applicant(s) may request that the file be forwarded to Certificates of Correction Branch, for issuance of a Certificate of Correction, if the Request is granted.

Any request under 37 CFR 3.81(b) should be directed to the following address or facsimile number:

By mail: Mail Stop PETITIONS
Commissioner for Patents
Post Office Box 1450
Alexandria, VA 22313-1450

By hand: Customer Service Window
Mail Stop Petitions
Randolph Building
401 Dulany Street
Alexandria, VA 22314

By fax: (703) 872-9306
ATTN: Office of Petitions

If a fee (currently $100) was previously submitted for consideration of a Request for Certificate of Correction, under CFR 1.323, to correct assignment data, , no additional fee is required.

Eva James
For Mary Diggs
Decisions & Certificates
of Correction Branch
(703) **308-9390 ext. 124** or 125

Darrell G. Mottley
100 g Street, NW., 11th Floor
Washington, DC 20001

ej

MAY 23 2006
PATENT & TRADEMARK OFFICE

PTO/SB/27 (05-03)
Approved for use through 04/30/2003. OMB 0651-0031
U.S. Patent and Trademark Office; U.S. DEPARTMENT OF COMMERCE
Under the Paperwork Reduction Act of 1995, no persons are required to respond to a collection of information unless it displays a valid OMB control number.

REQUEST FOR EXPEDITED EXAMINATION OF A DESIGN APPLICATION (37 CFR 1.155)

Application Number	29/246,963
Filing Date	May 23, 2006
First Named Inventor	Tetsuya T. Minami
Title	Portion Of A Shoe Upper
Atty Docket Number	015127.00735

HAND DELIVER TO THE DESIGN GROUP DIRECTOR'S OFFICE
-or- ADDRESS TO:
MAIL STOP EXPEDITED DESIGN
COMMISSIONER FOR PATENTS
P.O. Box 1450
Alexandria, VA 22313-1450

This is a request for expedited examination of a design application under 37 CFR 1.155.

NOTE: If the Request made by this form accompanies original application papers, include form PTO/SB/18 "Design Patent Application Transmittal" or its equivalent.

A preexamination search was conducted. The field of search was:

D2/896, 902, 907, 908, 943, 944, 945, 946, 969, 972, 973 and 974

Related applications: U.S. Serial No. 29/246,961 filed 5/23/06 - (Atty. Dkt. No. 015127.00734)

If not previously filed for the above-identified application, the following items required by 37 CFR 1.155 are enclosed:

Formal drawings (see 37 CFR 1.84).

The fee set forth in 37 CFR 1.17(k).

An information disclosure statement in compliance with 37 CFR 1.98.

6-6-06
Approved
Jacqueline M. Stone
Jacqueline M. Stone, Director
Technology Center 1700/2900

May 23, 2006
Date

Darrell G. Mottley
Signature

202-824-3000
Telephone Number

Darrell G. Mottley, Reg. No. 42,912
Typed or printed name

WARNING: Information on this form may become public. Credit card information should not be included on this form. Provide credit card information and authorization on PTO-2038.

05/24/2006 HAHMED1 00000100 29246963
01 FC:1882 900.00 DA

This collection of information is required by 37 CFR 1.155. The information is required to obtain or retain a benefit by the public which is to file (and by the USPTO to process) an application. Confidentiality is governed by 35 U.S.C. 122 and 37 CFR 1.14. This collection is estimated to take 6 minutes to complete, including gathering, preparing, and submitting the completed application form to the USPTO. Time will vary depending upon the individual case. Any comments on the amount of time you require to complete this form and/or suggestions for reducing this burden, should be sent to the Chief Information Officer, U.S. Patent and Trademark Office, U.S. Department of Commerce, P.O. Box 1450, Alexandria, VA 22313-1450. DO NOT SEND FEES OR COMPLETED FORMS TO THIS ADDRESS. SEND TO: Mail Stop Expedited Design, Commissioner for Patents, P.O. Box 1450, Alexandria, VA 22313-1450.

If you need assistance in completing the form, call 1-800-PTO-9199 and select option 2.

OIPE TAP40
MAY 24 2006
PATENT & TRADEMARK OFFICE

PTO/SB/27 (05-03)
Approved for use through 04/30/2003. OMB 0651-0031
U.S. Patent and Trademark Office; U.S. DEPARTMENT OF COMMERCE
Under the Paperwork Reduction Act of 1995, no persons are required to respond to a collection of information unless it displays a valid OMB control number.

REQUEST FOR EXPEDITED EXAMINATION OF A DESIGN APPLICATION (37 CFR 1.155)

Application Number	29/247,014
Filing Date	May 24, 2006
First Named Inventor	Kathleen E.R. Huthmaker
Title	Portion Of A Shoe Upper
Atty Docket Number	015127.00737

HAND DELIVER TO THE DESIGN GROUP DIRECTOR'S OFFICE
-or- ADDRESS TO:
MAIL STOP EXPEDITED DESIGN
COMMISSIONER FOR PATENTS
P.O. Box 1450
Alexandria, VA 22313-1450

This is a request for expedited examination of a design application under 37 CFR 1.155.

NOTE: If the Request made by this form accompanies original application papers, include form PTO/SB/18 "Design Patent Application Transmittal" or its equivalent.

A preexamination search was conducted. The field of search was:

D2/896, 902, 907, 908, 943, 944, 945, 946, 969, 972, 973 and 974

Related applications: _____

If not previously filed for the above-identified application, the following items required by 37 CFR 1.155 are enclosed:

Formal drawings (see 37 CFR 1.84).

The fee set forth in 37 CFR 1.17(k).

An information disclosure statement in compliance with 37 CFR 1.98.

6-20-06
Approved
Jacqueline M. Stone
Jacqueline M. Stone, Director
Technology Center 1700/2900

May 24, 2006
Date

Signature

202-824-3000
Telephone Number

Darrell G. Mottley, Reg. No. 42,912
Typed or printed name

WARNING: Information on this form may become public. Credit card information should not be included on this form. Provide credit card information and authorization on PTO-2038.

190733 29247014
01 FC:1802 900.00 DA

This collection of information is required by 37 CFR 1.155. The information is required to obtain or retain a benefit by the public which is to file (and by the USPTO to process) an application. Confidentiality is governed by 35 U.S.C. 122 and 37 CFR 1.14. This collection is estimated to take 6 minutes to complete, including gathering, preparing, and submitting the completed application form to the USPTO. Time will vary depending upon the individual case. Any comments on the amount of time you require to complete this form and/or suggestions for reducing this burden, should be sent to the Chief Information Officer, U.S. Patent and Trademark Office, U.S. Department of Commerce, P.O. Box 1450, Alexandria, VA 22313-1450. DO NOT SEND FEES OR COMPLETED FORMS TO THIS ADDRESS. SEND TO: Mail Stop Expedited Design, Commissioner for Patents, P.O. Box 1450, Alexandria, VA 22313-1450.

If you need assistance in completing the form, call 1-800-PTO-9199 and select option 2.

UNITED STATES PATENT AND TRADEMARK OFFICE

Commissioner for Patents
United States Patent and Trademark Office
P.O. Box 1450
Alexandria, VA 22313-1450
www.uspto.gov

NOTARO AND MICHALOS
100 DUTCH HILL ROAD
SUITE 110
ORANGEBURG NY 10962-2100

COPY MAILED

OCT 30 2006

OFFICE OF PETITIONS

In re Application of :
Zhi :
Application No. 29/247,017 : ON PETITION
Deposited: May 24, 2006 :
Attorney Docket No. J754-002 US :
For: LIGHTER

This is a decision on the petition, filed August 15, 2006, requesting that the above-identified application be accorded a filing date of May 24, 2006. The petition will be treated under 37 CFR 1.182.

The petition under 37 CFR 1.182 is **GRANTED.**

The application was deposited on May 24, 2006. On August 11, 2006, the Office of Initial Patent Examination mailed a Notice informing petitioner that no filing date had been accorded to the application papers deposited on May 24, 2006 because a claim was not filed. A claim is required by 35 U.S.C. 112.

In response to the Notice, petitioner filed the present petition.

There is a basis for according the application, **as filed**, a filing date of May 24, 2006. In Vas-Cath Inc. v. Mahurkar, 935 F.2d 1555, 19 USPQ2d 1111 (Fed. Cir. 1991), the Federal Circuit held that "under proper circumstances, drawings alone may provide a 'written description' of an invention as required by § 112.

The requirement for a claim in a design application is a requirement of the statute. Section 171 of title 35 of the United States Code makes section 112 applicable to design applications. Section 112 requires that the "specification shall conclude with one or more claims..." Thus, the requirement for a claim in a design application is not pro forma, but is a necessary part of a complete design application.

A review of the record reveals that no formal claim was included with the application papers deposited on May 24, 2006. However, the application papers deposited on May 24, 2006, included a declaration stating that the inventor believes himself to be:

"the original, first, and sole inventor . . . of the subject matter which is claimed and for which a patent is sought on the invention entitled "Lighter" the specification of which is attached hereto"

A formal claim was not included with the application when it was deposited. However, since this a design application, the above-quoted language in the declaration can be construed as the claim required by 35 U.S.C. 112 insofar as this design application is concerned.

The form of a claim in a design application is fixed by rule and is accordingly different from the claims of other applications. Accordingly, since this a design application and since the claim language quoted above is present, there is no statutory prohibition against construing this language as the statutory required claim. It is also clear that there has been, and is, no doubt as to the form of, and what is to be claimed herein since this is a design application for which the form of the claim is set by 37 CFR 1.153.

Under the circumstances, it is appropriate that the language quoted above from the declaration be construed as the claim for purposes of according this application a filing date of May 24, 2006. The petition is granted.

The application is being returned to Office of Initial Patent Examination for further processing, with a filing date of **May 24, 2006**, using only the application papers filed on that date.

Any inquiries pertaining to this matter may be directed to the undersigned at (571) 272-3230.

Shirene Willis Brantley

Shirene Willis Brantley
Senior Petitions Attorney
Office of Petitions

UNITED STATES PATENT AND TRADEMARK OFFICE

Commissioner for Patents
United States Patent and Trademark Office
P.O. Box 1450
Alexandria, VA 22313-1450
www.uspto.gov

Patent No. : D536,546 S
Ser. No. : 29/247,018
Inventor(s) : Goebert et al.
Issued : Feb. 13, 2007
Title : VEHICLE SEAT
Docket No. : 8.180

Re: Request for Certificate of Correction

Consideration has been given your request for the issuance of a certificate of correction for the above-identified patent under the provisions of Rule(s) 1.322 and/or 1.323.

Assignees' names and addresses (assignment data) printed in a patent, are based *solely* on information supplied in the appropriate space for identifying the assignment data, i.e., item 3 of the Issue Fee Transmittal Form PTOL-85B. Granting of a request under 37 CFR 3.81(b) is required to correct applicant's error providing ***incorrect or erroneous*** assignment data, *before* issuance of a Certificate of Correction, under 37 CFR 1.323 *(see Manual of Patent Examining Procedures (M.P.E.P) Chp.1400, sect. 1481).* This procedure is required *at any time after the issue fee is paid*, including after issuance of the patent.

In view of the foregoing, your request, in this mater, is hereby denied.

A request to correct the Assignee under 37 CFR 3.81(b) should include:

A. **the processing fee set forth in 37 CFR 1.117(h) (currently $130);**
B. a statement that the failure to include the correct assignee name on the PTOL-85B was inadvertent; and
C. a copy of the Notice of Recordation of Assignment Document, reflecting the reel and frame number where the assignment(s) is recorded and/or reflecting proof of *the date* the assignment was submitted for recordation.

In the Request, Applicant(s) may request that the file be forwarded to Certificates of Correction Branch, for issuance of a Certificate of Correction, if the Request is granted.

Any request under 37 CFR 3.81(b) should be directed to the following address or facsimile number:

By mail: Mail Stop PETITIONS
Commissioner for Patents
Post Office Box 1450
Alexandria, VA 22313-1450

By hand: Customer Service Window
Mail Stop Petitions
Randolph Building
401 Dulany Street
Alexandria, VA 22314

By fax: (571) 273-0025
ATTN: Office of Petitions

If a fee (currently $100) was previously submitted for consideration of a Request for Certificate of Correction, under CFR 1.323, to correct assignment data, , no additional fee is required.

Ennis Young
For Mary Diggs
Decisions & Certificates
of Correction Branch
(703) **756-1542** or (703) 756-1814

UNITED STATES PATENT AND TRADEMARK OFFICE

Commissioner for Patents
United States Patent and Trademark Office
P.O. Box 1450
Alexandria, VA 22313-1450
www.uspto.gov

BOYLE FREDRICKSON S.C.
840 North Plankinton Avenue
MILWAUKEE WI 53203

MAILED

JUL 26 2010

OFFICE OF PETITIONS

In re Patent No. D,536,546 :
Issue Date: February 13, 2007 :
Application No. 29/247,018 : ON PETITION
Filed: May 24, 2006 :
Attorney Docket No. 8,180 :

This is a decision on the petition filed May 24, 2010, which is being treated as a request under 37 CFR 3.81(b)[1] to correct the name of the assignee on the front page of the above-identified patent by way of a Certificate of Correction.

The request is **GRANTED**.

Telephone inquiries concerning this decision may be directed to the undersigned at (571) 272-2991. Inquiries regarding the issuance of a certificate of correction should be directed to the Certificate of Correction Branch at (571) 272-4200.

The Certificates of Correction Branch will be notified of this decision granting the petition under 37 CFR 3.81(b) and directing issuance of the requested Certificate of Correction.

Terri Johnson
Petitions Examiner
Office of Petitions

[1] *See* MPEP 1309, subsection II; and Official Gazette of June 22, 2004.

SPE RESPONSE FOR CERTIFICATE OF CORRECTION

Paper No.: _____

DATE : 6/5/07

TO SPE OF : ART UNIT 2700 2913

SUBJECT : Request for Certificate of Correction for Appl. No.: 29/247019 Patent No. D536887

Please respond to this request for a certificate of correction within 7 days.

Please review the requested changes/corrections as shown in the COCIN document(s) in the IFW application image. No new matter should be introduced, nor should the scope or meaning of the claims be changed.

Please Review Assignee on Title Packet

Please complete the response (see below) and forward the completed response to scanning using document code **COCX**.

Certificates of Correction Branch

703-308-9390 ext. 117

Thank You For Your Assistance

The request for issuing the above-identified correction(s) is hereby:

Note your decision on the appropriate box.

- ☑ Approved — (All changes apply.) /MD/
- ☐ Approved in Part — Specify below which changes do not apply.
- ☐ Denied — State the reasons for denial below.

Comments: _____

Caron D Veynar

CARON D. VEYNAR
SUPERVISORY PATENT EXAMINER
SPE

2913
Art Unit

UNITED STATES PATENT AND TRADEMARK OFFICE

Commissioner for Patents
United States Patent and Trademark Office
P.O. Box 1450
Alexandria, VA 22313-1450
www.uspto.gov

Patent No. : D536,187 S
Ser. No. : 29/247,021
Inventor(s) : Goebert et al.
Issued : Feb. 6, 2007
Title : VEHICLE SEAT
Docket No. : 8.185

Re: Request for Certificate of Correction

Consideration has been given your request for the issuance of a certificate of correction for the above-identified patent under the provisions of Rule(s) 1.322 and/or 1.323.

Assignees' names and addresses (assignment data) printed in a patent, are based *solely* on information supplied in the appropriate space for identifying the assignment data, i.e., item 3 of the Issue Fee Transmittal Form PTOL-85B. Granting of a request under 37 CFR 3.81(b) is required to correct applicant's error providing ***incorrect or erroneous*** assignment data, *before* issuance of a Certificate of Correction, under 37 CFR 1.323 *(see Manual of Patent Examining Procedures (M.P.E.P) Chp.1400, sect. 1481).* This procedure is required *at any time after the issue fee is paid*, including after issuance of the patent.

In view of the foregoing, your request, in this mater, is hereby denied.

A request to correct the Assignee under 37 CFR 3.81(b) should include:

A. **the processing fee set forth in 37 CFR 1.117(h) (currently $130);**
B. a statement that the failure to include the correct assignee name on the PTOL-85B was inadvertent; and
C. a copy of the Notice of Recordation of Assignment Document, reflecting the reel and frame number where the assignment(s) is recorded and/or reflecting proof of *the date* the assignment was submitted for recordation.

In the Request, Applicant(s) may request that the file be forwarded to Certificates of Correction Branch, for issuance of a Certificate of Correction, if the Request is granted.

Any request under 37 CFR 3.81(b) should be directed to the following address or facsimile number:

By mail: Mail Stop PETITIONS
Commissioner for Patents
Post Office Box 1450
Alexandria, VA 22313-1450

By hand: Customer Service Window
Mail Stop Petitions
Randolph Building
401 Dulany Street
Alexandria, VA 22314

By fax: (571) 273-0025
ATTN: Office of Petitions

If a fee (currently $100) was previously submitted for consideration of a Request for Certificate of Correction, under CFR 1.323, to correct assignment data, , no additional fee is required.

Ennis Young
For Mary Diggs
Decisions & Certificates
of Correction Branch
(703) **756-1542** or (703) 756-1814

UNITED STATES PATENT AND TRADEMARK OFFICE

Commissioner for Patents
United States Patent and Trademark Office
P.O. Box 1450
Alexandria, VA 22313-1450
www.uspto.gov

MAILED

MAY 14 2010

OFFICE OF PETITIONS

BOYLE FREDRICKSON S.C.
840 North Plankinton Avenue
MILWAUKEE WI 53203

In re Patent No. D536,187 :
Issue Date: 02/06/2007 :
Application No. 29/247021 : ON PETITION
Filed: 05/24/2006 :
Attorney Docket No. 8.185 :

This is a decision on the REQUEST TO CORRECT ASSIGNEE filed December 22, 2009, which is properly treated as a petition under 37 CFR 3.81(b).

Patentees request correction of the front page of the Letters Patent to include the correct assignee data via Certificate of Correction. With the present request, patentees submitted a completed Certificate of Correction form and paid the requisite fees. Furthermore, it is noted that the assignment was recorded with the USPTO prior to the issuance of the patent.

In view of the above, the request under 37 CFR 3.81(b) to correct the assignee data is GRANTED.

The required $130.00 processing fee set forth in § 1.17(i) will be charged to the Deposit Account as authorized.

Telephone inquiries concerning this decision may be directed to the undersigned at (571) 272-3211. Inquiries regarding the issuance of a certificate of correction should be directed to the Certificate of Correction Branch at (571) 272-4200.

The Certificates of Correction Branch will be notified of this decision granting the petition under 37 CFR 3.81(b) and directing issuance of the requested Certificate of Correction as to the assignment information.

Christina Tartera Donnell

Christina Tartera Donnell
Senior Petitions Attorney
Office of Petitions

29/247,027

PTO/SB/27 (09-04)
Approved for use through 07/31/2006. OMB 0651-0031
U.S. Patent and Trademark Office; U.S. DEPARTMENT OF COMMERCE
Under the Paperwork Reduction Act of 1995, no persons are required to respond to a collection of information unless it displays a valid OMB control number.

REQUEST FOR EXPEDITED EXAMINATION OF A DESIGN APPLICATION (37 CFR 1.155)

Application Number	TBD
Filing Date	Herewith
First Named Inventor	Bo Lupo
Title	Portion of a Shoe Midsole
Atty Docket Number	015127.00743

ADDRESS TO:
MAIL STOP EXPEDITED DESIGN
COMMISSIONER FOR PATENTS
P.O. Box 1450
Alexandria, VA 22313-1450

This is a request for expedited examination of a design application under 37 CFR 1.155.

NOTE: If the Request made by this form accompanies original application papers, include form PTO/SB/18 "Design Patent Application Transmittal" or its equivalent.

A preexamination search was conducted. The field of search was:

D2/896, 902, 907, 908, 943, 944, 945, 946, 947 964, 967, 972 and 977

Related applications: ____

If not previously filed for the above-identified application, the following items required by 37 CFR 1.155 are enclosed:
Formal drawings (see 37 CFR 1.84).
The fee set forth in 37 CFR 1.17(k).
An information disclosure statement in compliance with 37 CFR 1.98.

7-6-06
Approved
Jacqueline M. Stone
Jacqueline M. Stone, Director
Technology Center 2700/2900

/Darrell G. Mottley/ — Signature
May 24, 2006 — Date
Darrell G. Mottley — Typed or printed name
42,912 — Registration Number, if applicable
(202) 824-3000 — Telephone Number

WARNING: Information on this form may become public. Credit card information should not be included on this form. Provide credit card information and authorization on PTO-2038.

This collection of information is required by 37 CFR 1.155. The information is required to obtain or retain a benefit by the public which is to file (and by the USPTO to process) an application. Confidentiality is governed by 35 U.S.C. 122 and 37 CFR 1.11 and 1.14. This collection is estimated to take 6 minutes to complete, including gathering, preparing, and submitting the completed application form to the USPTO. Time will vary depending upon the individual case. Any comments on the amount of time you require to complete this form and/or suggestions for reducing this burden, should be sent to the Chief Information Officer, U.S. Patent and Trademark Office, U.S. Department of Commerce, P.O. Box 1450, Alexandria, VA 22313-1450. DO NOT SEND FEES OR COMPLETED FORMS TO THIS ADDRESS. **SEND TO: Mail Stop Expedited Design, Commissioner for Patents, P.O. Box 1450, Alexandria, VA 22313-1450.**
If you need assistance in completing the form, call 1-800-PTO-9199 and select option 2.

UNITED STATES PATENT AND TRADEMARK OFFICE

COMMISSIONER FOR PATENTS
UNITED STATES PATENT AND TRADEMARK OFFICE
P.O. BOX 1450
ALEXANDRIA, VA 22313-1450
www.uspto.gov

ADVANTIA LAW GROUP
9035 SOUTH 1300 EAST
SUITE 200
SANDY UT 84094

COPY MAILED

SEP 12 2007

OFFICE OF PETITIONS

In re Application of :
Franklin H. Ballman et al :
Application No. 29/247,075 : ON PETITION
Filed: 26 May 2006 :
Attorney Docket No. 3361.2.3 DP :

This is a decision on the petition under 37 CFR 1.137(b), filed June 12, 2007, to revive the above-identified application.

The petition is **GRANTED**.

The application became abandoned for failure s to timely pay the issue on or before April 26, 2007, as required by the Notice of Allowance and Fee(s) Due, mailed January 26, 2007, which set a statutory period for reply of three (3) months. Accordingly, the application became abandoned on April 27, 2007.

The petition satisfies the requirements of 37 CFR 1.137(b) in that petitioner has supplied (1) the reply in the form of payment of the Issue Fee of $400.00 and the Terminal Disclaimer and requisite Fee of $65.00, (2) the petition fee of $750.00; and (3) a statement of unintentional delay. Accordingly, the Issue Fee payment is accepted as having been unintentionally delayed.

Telephone inquiries concerning this decision should be directed to Charles Smoot at (571) 272-3299, or in his absence the undersigned at (571) 272-7099.

The application file is being referred to the Publishing Division to be processed into a patent.

David Bucci
Petitions Examiner
Office of Petitions

29/247,091

PTO/SB/27 (09-04)
Approved for use through 07/31/2006. OMB 0651-0031
U.S. Patent and Trademark Office; U.S. DEPARTMENT OF COMMERCE
Under the Paperwork Reduction Act of 1995, no persons are required to respond to a collection of information unless it displays a valid OMB control number.

REQUEST FOR EXPEDITED EXAMINATION OF A DESIGN APPLICATION (37 CFR 1.155)

Application Number	
Filing Date	May 30, 2006
First Named Inventor	Carl L. Madore
Title	Portion of a Shoe Upper
Atty Docket Number	015127.00736

ADDRESS TO:
MAIL STOP EXPEDITED DESIGN
COMMISSIONER FOR PATENTS
P.O. Box 1450
Alexandria, VA 22313-1450

This is a request for expedited examination of a design application under 37 CFR 1.155.

NOTE: If the Request made by this form accompanies original application papers, include form PTO/SB/18 "Design Patent Application Transmittal" or its equivalent.

A preexamination search was conducted. The field of search was:

D2, subclass 896, 902, 907, 908, 910, 911, 943, 944, 945, 946, 969, 972, 973, 974

Related applications: ____

If not previously filed for the above-identified application, the following items required by 37 CFR 1.155 are enclosed:
Formal drawings (see 37 CFR 1.84).
The fee set forth in 37 CFR 1.17(k).
An information disclosure statement in compliance with 37 CFR 1.98.

7-6-06
Approved
Jacqueline M. Stone
Jacqueline M. Stone, Director
Technology Center 1700/2900

/H. Wayne Porter/
Signature

May 30, 2006
Date

H. Wayne Porter
Typed or printed name

42,084
Registration Number, if applicable

202-824-3000
Telephone Number

WARNING: Information on this form may become public. Credit card information should not be included on this form. Provide credit card information and authorization on PTO-2038.

This collection of information is required by 37 CFR 1.155. The information is required to obtain or retain a benefit by the public which is to file (and by the USPTO to process) an application. Confidentiality is governed by 35 U.S.C. 122 and 37 CFR 1.11 and 1.14. This collection is estimated to take 6 minutes to complete, including gathering, preparing, and submitting the completed application form to the USPTO. Time will vary depending upon the individual case. Any comments on the amount of time you require to complete this form and/or suggestions for reducing this burden, should be sent to the Chief Information Officer, U.S. Patent and Trademark Office, U.S. Department of Commerce, P.O. Box 1450, Alexandria, VA 22313-1450. DO NOT SEND FEES OR COMPLETED FORMS TO THIS ADDRESS. **SEND TO: Mail Stop Expedited Design, Commissioner for Patents, P.O. Box 1450, Alexandria, VA 22313-1450.**
If you need assistance in completing the form, call 1-800-PTO-9199 and select option 2.

UNITED STATES PATENT AND TRADEMARK OFFICE

Commissioner for Patents
United States Patent and Trademark Office
P.O. Box 1450
Alexandria, VA 22313-1450
www.uspto.gov

KLEINBERG & LERNER, LLP
2049 CENTURY PARK EAST
SUITE 1080
LOS ANGELES, CA 90067

COPY MAILED

DEC 0 1 2006

OFFICE OF PETITIONS

In re Application of :
Michael Kreiss :
Application No. 29/247,096 : DECISION
Filing or 371(c) Date: 05/30/2006 : ON PETITION
Attorney Docket Number: 16960 :

This is a decision on the Response to the Correspondence filed August 14, 2006, including four (4) sheets of drawings, in response to the Notice of Omitted Item(s) in a Nonprovisional Application ("Notice"). The response is treated as a petition under 37 CFR 1.182.

The petition is **dismissed**.

Background

The application was filed on May 30, 2006. On August 11, 2006, the Office of Initial Patent Examination (OIPE) mailed a Notice of Omitted Item(s) in a Nonprovisional Application (hereinafter "Notice") stating that the application had been accorded a filing; however, Figures 2-6 described in the specification appeared to have been omitted from the application.

The Notice of Omitted Items

> The mailing of a "Notice of Omitted Item(s)" will permit the applicant to: (A) promptly establish prior receipt in the USPTO of the page(s) at issue. An applicant asserting that the page(s) was in fact received by the USPTO with the application papers must, within 2 months from the date of the "Notice of Omitted Item(s)," file a petition under 37 CFR 1.53(e) with the petition fee set forth in 37 CFR 1.17(f), along with evidence of such deposit (37 CFR 1.181(f)). The petition fee will be refunded if it is determined that the page(s) was in fact received by the USPTO with the application papers deposited on filing. The 2-month period is not extendable under 37 CFR 1.136;

(B) promptly submit the omitted page(s) in a nonprovisional application and accept the date of such submission as the application filing date. An applicant desiring to submit the omitted page(s) in a nonprovisional application and accept the date of such submission as the application filing date must, within 2 months from the date of the "Notice of Omitted Item(s)," file any omitted page(s) with an oath or declaration in compliance with 37 CFR 1.63 and 37 CFR 1.64 referring to such page(s) and a petition under 37 CFR 1.182 with the petition fee set forth in 37 CFR 1.17(f), requesting the later filing date (37 CFR 1.181(f)). The 2-month period is not extendable under 37 CFR 1.136; or
(C) accept the application as deposited in the USPTO.

The instant petition

Applicant files the instant correspondence and four (4) sheets of drawings, and submits $400.00, (the fee for filing a petition under 37 CFR 1.182), but has not filed a petition. Nor has Applicant asserted that the Figures were in fact deposited in the USPTO with the application papers, or requested that the Office accept the omitted Figures and accept the date of such submission as the application filing date, or filed any omitted page(s) with an oath or declaration in compliance with 37 CFR 1.63 and 37 CFR 1.64 referring to such page(s).

The MPEP 601 further provides that

Applicant may accept the application as deposited in the USPTO by either:
(1) not filing a petition under 37 CFR 1.53(e) or 37 CFR 1.182 (and the required petition fee) as discussed above within 2 months of the date of the "Notice of Omitted Item(s)". The failure to file a petition under 37 CFR 1.53(e) or 37 CFR 1.182 will be treated as constructive acceptance by the applicant of the application as deposited in the USPTO. The application will maintain the filing date as of the date of deposit of the application papers in the USPTO, and the original application papers (i.e., the original disclosure of the invention) will include only those application papers present in the USPTO on the date of deposit. Amendment of the specification is required in a nonprovisional application to renumber the pages consecutively and cancel any incomplete sentences caused by the absence of the omitted page(s). Such amendment should be by way of preliminary amendment submitted prior to the first Office action to avoid delays in the prosecution of the application, or

(2) filing an amendment under 37 CFR 1.57(a). If an application was filed on or after September 21, 2004, and contains a claim under 37 CFR 1.55 for priority of a prior-filed foreign application, or a claim under 37 CFR 1.78 for the benefit of a prior-filed provisional, nonprovisional, or international

> application that was present on the filing date of the application, and the omitted portion of the specification was inadvertently omitted from the application and is completely contained in the prior-filed application, applicant may submit an amendment to include the inadvertently omitted portion of the specification pursuant to 37 CFR 1.57(a). Such amendment should be by way of a preliminary amendment and the preliminary amendment must be submitted within 2 months from the date of the "Notice of Omitted Item(s)." The amendment should be identified as an amendment pursuant to 37 CFR 1.57(a) and must comply with the requirements of 37 CFR 1.57(a) and 37 CFR 1.121. See MPEP § 201.17. The application will maintain the filing date as of the date of deposit of the original application papers in the USPTO. The original application papers (i.e., the original disclosure of the invention) will include only those application papers present in the USPTO on the original date of deposit. The 2-month period is not extendable under 37 CFR 1.136.

Id.

Analysis and conclusion

Here, Applicant has in fact responded to the Notice; however, Applicant has not filed a petition or an amendment.

The petition is dismissed without prejudice. Applicant should file a request for reconsideration of petition and clarify the relief requested (i.e. accept as the filing date the date the date the omitted figures were filed, and include an oath or declaration in compliance with 37 CFR 1.63 and 37 CFR 1.64 referring to such page(s), or demonstrate that the Figures were filed with the application on May 30, 2006.

The application will be returned to the Office of Initial Patent Examination for further processing with a filing date of May 30, 2006, using the application papers filed on that date.

Telephone inquiries concerning this matter should be directed to the undersigned at (571) 272-3232.

Derek L. Woods
Attorney
Office of Petitions

UNITED STATES PATENT AND TRADEMARK OFFICE

Commissioner for Patents
United States Patent and Trademark Office
P.O. Box 1450
Alexandria, VA 22313-1450
www.uspto.gov

KLEINBERG & LERNER, LLP
2049 CENTURY PARK EAST
SUITE 1080
LOS ANGELES, CA 90067

COPY MAILED

MAR 2 6 2007

OFFICE OF PETITIONS

In re Application of :
Michael Kreiss :
Application No. 29/247,096 : DECISION
Filing or 371(c) Date: 08/14/2006 : ON PETITION
Attorney Docket Number: 16960 :

This is a decision on the Petition and Request for Reconsideration of Decision, filed December 11, 2006, in response to the Notice of Omitted Item(s) in a Nonprovisional Application ("Notice"), requesting inclusion of four (4) sheets of drawings and requesting the application be accorded as a filing date the date the four (4) sheets of drawings were filed. The response is treated as a petition under 37 CFR 1.182.

The petition is **granted**.

Background

The application was filed on May 30, 2006. On August 11, 2006, the Office of Initial Patent Examination (OIPE) mailed a Notice of Omitted Item(s) in a Nonprovisional Application (hereinafter "Notice") stating that the application had been accorded a filing; however, Figures 2-6 described in the specification appeared to have been omitted from the application.

The Notice of Omitted Items

The mailing of a "Notice of Omitted Item(s)" will permit the applicant to:

(A) promptly establish prior receipt in the USPTO of the page(s) at issue. An applicant asserting that the page(s) was in fact received by the USPTO with the application papers must, within 2 months from the date of the

"Notice of Omitted Item(s)," file a petition under 37 CFR 1.53(e) with the petition fee set forth in 37 CFR 1.17(f), along with evidence of such deposit (37 CFR 1.181(f)). The petition fee will be refunded if it is determined that the page(s) was in fact received by the USPTO with the application papers deposited on filing. The 2-month period is not extendable under 37 CFR 1.136;

(B) promptly submit the omitted page(s) in a nonprovisional application and accept the date of such submission as the application filing date. An applicant desiring to submit the omitted page(s) in a nonprovisional application and accept the date of such submission as the application filing date must, within 2 months from the date of the "Notice of Omitted Item(s)," file any omitted page(s) with an oath or declaration in compliance with 37 CFR 1.63 and 37 CFR 1.64 referring to such page(s) and a petition under 37 CFR 1.182 with the petition fee set forth in 37 CFR 1.17(f), requesting the later filing date (37 CFR 1.181(f)). The 2-month period is not extendable under 37 CFR 1.136; or
(C) accept the application as deposited in the USPTO.

The August 14, 2006 filing

On August 14, 2006 Applicant filed four (4) sheets of drawings, and $400.00, (the fee for filing a petition under 37 CFR 1.182), but had not filed a petition. Nor had Applicant asserted that the Figures were in fact deposited in the USPTO with the application papers, or requested that the Office accept the omitted Figures and accept the date of such submission as the application filing date, or filed any omitted page(s) with an oath or declaration in compliance with 37 CFR 1.63 and 37 CFR 1.64 referring to such page(s).

The correspondence was treated as a petition and was dismissed in a Decision mailed December 1, 2006. A petition and an oath or declaration in compliance with 37 CFR 1.63 and 37 CFR 1.64 was required.

The instant petition

Applicant files the present petition and includes an oath or declaration in compliance with 37 CFR 1.63 and 37 CFR 1.64. Accordingly, the petition is granted.

The application will be returned to the Office of Initial Patent Examination for further processing with a filing date of August 14, 2006, the date the omitted four (4) sheets of drawings were filed.

Telephone inquiries concerning this matter should be directed to the undersigned at (571) 272-3232.

Derek L. Woods
Attorney
Office of Petitions

29/247,107

PTO/SB/27 (05-03)
Approved for use through 04/30/2003. OMB 0651-0031
U.S. Patent and Trademark Office; U.S. DEPARTMENT OF COMMERCE
Under the Paperwork Reduction Act of 1995, no persons are required to respond to a collection of information unless it displays a valid OMB control number.

REQUEST FOR EXPEDITED EXAMINATION OF A DESIGN APPLICATION (37 CFR 1.155)

Application Number	TBD
Filing Date	May 31, 2006
First Named Inventor	Kenneth Link
Title	Portion of a Shoe Outsole
Atty Docket Number	015127.00733

HAND DELIVER TO THE DESIGN GROUP DIRECTOR'S OFFICE
-or- ADDRESS TO:
MAIL STOP EXPEDITED DESIGN
COMMISSIONER FOR PATENTS
P.O. Box 1450
Alexandria, VA 22313-1450

This is a request for expedited examination of a design application under 37 CFR 1.155.

NOTE: If the Request made by this form accompanies original application papers, include form PTO/SB/18 "Design Patent Application Transmittal" or its equivalent.

A preexamination search was conducted. The field of search was:

D2/902, 908, 947, 951, 952, 953, 954, 955, 956, 957, 958, 959 and 960

Related applications: _____

If not previously filed for the above-identified application, the following items required by 37 CFR 1.155 are enclosed:

Formal drawings (see 37 CFR 1.84).

The fee set forth in 37 CFR 1.17(k).

An information disclosure statement in compliance with 37 CFR 1.98.

7-6-06
Approved
Jacqueline M. Stone
Jacqueline M. Stone, Director
Technology Center 1700/2900

5/31/06
Date

/Anthony W. Kandare/
Signature

202-824-3000
Telephone Number

Anthony W. Kandare, Reg. No. 48,830
Typed or printed name

WARNING: Information on this form may become public. Credit card information should not be included on this form. Provide credit card information and authorization on PTO-2038.

This collection of information is required by 37 CFR 1.155. The information is required to obtain or retain a benefit by the public which is to file (and by the USPTO to process) an application. Confidentiality is governed by 35 U.S.C. 122 and 37 CFR 1.14. This collection is estimated to take 6 minutes to complete, including gathering, preparing, and submitting the completed application form to the USPTO. Time will vary depending upon the individual case. Any comments on the amount of time you require to complete this form and/or suggestions for reducing this burden, should be sent to the Chief Information Officer, U.S. Patent and Trademark Office, U.S. Department of Commerce, P.O. Box 1450, Alexandria, VA 22313-1450. DO NOT SEND FEES OR COMPLETED FORMS TO THIS ADDRESS. **SEND TO: Mail Stop Expedited Design, Commissioner for Patents, P.O. Box 1450, Alexandria, VA 22313-1450.**

If you need assistance in completing the form, call 1-800-PTO-9199 and select option 2.

PTO/SB/27 (08-04)
Approved for use through 07/31/2006. OMB 0651-0031
U.S. Patent and Trademark Office; U.S. DEPARTMENT OF COMMERCE
Under the Paperwork Reduction Act of 1995, no persons are required to respond to a collection of information unless it displays a valid OMB control number.

REQUEST FOR EXPEDITED EXAMINATION OF A DESIGN APPLICATION (37 CFR 1.155)

Application Number	TBD 29/247 137
Filing Date	June 1, 2006
First Named Inventor	Bo Lupo
Title	Portion of a Shoe Upper
Atty Docket Number	015127.00744

ADDRESS TO:
MAIL STOP EXPEDITED DESIGN
COMMISSIONER FOR PATENTS
P.O. Box 1450
Alexandria, VA 22313-1450

This is a request for expedited examination of a design application under 37 CFR 1.155.

NOTE: If the Request made by this form accompanies original application papers, include form PTO/SB/18 "Design Patent Application Transmittal" or its equivalent.

A preexamination search was conducted. The field of search was:

D2/896, 902, 907, 908, 910, 911, 943, 944, 945, 946, 969, 972, 973, and 974

Related applications: _____

If not previously filed for the above-identified application, the following items required by 37 CFR 1.155 are enclosed:
- Formal drawings (see 37 CFR 1.84).
- The fee set forth in 37 CFR 1.17(k).
- An information disclosure statement in compliance with 37 CFR 1.98.

6-20-06
Approved
Jacqueline M. Stone
Jacqueline M. Stone, Director
Technology Center 1700/2900

/Darrell G. Mottley/ — Signature

June 1, 2006 — Date

Darrell G. Mottley — Typed or printed name

42,912 — Registration Number, if applicable

(202) 824-3000 — Telephone Number

WARNING: Information on this form may become public. Credit card information should not be included on this form. Provide credit card information and authorization on PTO-2038.

This collection of information is required by 37 CFR 1.155. The information is required to obtain or retain a benefit by the public which is to file (and by the USPTO to process) an application. Confidentiality is governed by 35 U.S.C. 122 and 37 CFR 1.11 and 1.14. This collection is estimated to take 6 minutes to complete, including gathering, preparing, and submitting the completed application form to the USPTO. Time will vary depending upon the individual case. Any comments on the amount of time you require to complete this form and/or suggestions for reducing this burden, should be sent to the Chief Information Officer, U.S. Patent and Trademark Office, U.S. Department of Commerce, P.O. Box 1450, Alexandria, VA 22313-1450. DO NOT SEND FEES OR COMPLETED FORMS TO THIS ADDRESS. SEND TO: **Mail Stop Expedited Design, Commissioner for Patents, P.O. Box 1450, Alexandria, VA 22313-1450.**
If you need assistance in completing the form, call 1-800-PTO-9199 and select option 2.

UNITED STATES PATENT AND TRADEMARK OFFICE

5-21-07

Commissioner for Patents
United States Patent and Trademark Office
P.O. Box 1450
Alexandria, VA 22313-1450
www.uspto.gov

Patent No. : D533,710
Ser. No. : 29/247,137
Inventor(s) : Bo Lupo
Issued : December 19, 2006
Title : PORTION OF A SHOE UPPER
Docket No. : 015127.00744

Re: Request for Certificate of Correction

Consideration has been given your request for the issuance of a certificate of correction for the above-identified patent under the provisions of Rule(s) 1.322 or 1.323.

Assignees' names and addresses (assignment data) printed in a patent, are based *solely* on information supplied in the appropriate space for identifying the assignment data, i.e., item 3 of the Issue Fee Transmittal Form PTOL-85B. Granting of a request under 37 CFR 3.81(b) is required to correct applicant's error providing ***incorrect or erroneous*** assignment data, *before* issuance of a Certificate of Correction, under 37 CFR 1.323 *(see Manual of Patent Examining Procedures (M.P.E.P) Chp.1400, sect. 1481).* This procedure is required *at any time after the issue fee is paid*, including after issuance of the patent.

In view of the foregoing, your request is hereby denied.

A request to correct the Assignee under 37 CFR 3.81(b) should include:

A. **the processing fee set forth in 37 CFR 1.117(h) (currently $130);**
B. a statement that the failure to include the correct assignee name on the PTOL-85B was inadvertent; and
C. a copy of the Notice of Recordation of Assignment Document, reflecting the reel and frame number where the assignment(s) is recorded and/or reflecting proof of *the date* the assignment was submitted for recordation.

In the Request, Applicant(s) may request that the file be forwarded to Certificates of Correction Branch, for issuance of a Certificate of Correction, if the Request is granted.

Any request under 37 CFR 3.81(b) should be directed to the following address or facsimile number:

By mail: Mail Stop PETITIONS
Commissioner for Patents
Post Office Box 1450
Alexandria, VA 22313-1450

By hand: Customer Service Window
Mail Stop Petitions
Randolph Building
401 Dulany Street
Alexandria, VA 22314

By fax: (703) 872-9306
ATTN: Office of Petitions

If a fee (currently $100) was previously submitted for consideration of a Request for Certificate of Correction, under CFR 1.323, to correct assignment data, no additional fee is required.

Eva James
For Cecelia Newman
Decisions & Certificates
of Correction Branch
(703) **308-9390 ext. 124** or 105

Darrell G. Mottley
Banner & Witcoff, LTD
1001 G Street, NW 11th Floor
Washington, DC 20001

ej

PTO/SB/27 (05-03)
Approved for use through 04/30/2003. OMB 0651-0031
U.S. Patent and Trademark Office; U.S. DEPARTMENT OF COMMERCE
Under the Paperwork Reduction Act of 1995, no persons are required to respond to a collection of information unless it displays a valid OMB control number.

REQUEST FOR EXPEDITED EXAMINATION OF A DESIGN APPLICATION (37 CFR 1.155)

Application Number	TBD 29/247,138
Filing Date	June 1, 2006
First Named Inventor	John Hlavacs
Title	Portion of a Shoe Upper
Atty Docket Number	015127.00742

HAND DELIVER TO THE DESIGN GROUP DIRECTOR'S OFFICE
-or- ADDRESS TO:
MAIL STOP EXPEDITED DESIGN
COMMISSIONER FOR PATENTS
P.O. Box 1450
Alexandria, VA 22313-1450

This is a request for expedited examination of a design application under 37 CFR 1.155.

NOTE: If the Request made by this form accompanies original application papers, include form PTO/SB/18 "Design Patent Application Transmittal" or its equivalent.

A preexamination search was conducted. The field of search was:

D2/896, 902, 907, 908, 943, 944, 945, 946, 969, 972, 973 and 974

Related applications: _____

If not previously filed for the above-identified application, the following items required by 37 CFR 1.155 are enclosed:

Formal drawings (see 37 CFR 1.84).

The fee set forth in 37 CFR 1.17(k).

An information disclosure statement in compliance with 37 CFR 1.98.

6-20-06
Approved
Jacqueline M. Stone
Jacqueline M. Stone, Director
Technology Center 1700/2900

6/1/06
Date

/Anthony W. Kandare/
Signature

202-824-3000
Telephone Number

Anthony W. Kandare, Reg. No. 48,830
Typed or printed name

WARNING: Information on this form may become public. Credit card information should not be included on this form. Provide credit card information and authorization on PTO-2038.

This collection of information is required by 37 CFR 1.155. The information is required to obtain or retain a benefit by the public which is to file (and by the USPTO to process) an application. Confidentiality is governed by 35 U.S.C. 122 and 37 CFR 1.14. This collection is estimated to take 6 minutes to complete, including gathering, preparing, and submitting the completed application form to the USPTO. Time will vary depending upon the individual case. Any comments on the amount of time you require to complete this form and/or suggestions for reducing this burden, should be sent to the Chief Information Officer, U.S. Patent and Trademark Office, U.S. Department of Commerce, P.O. Box 1450, Alexandria, VA 22313-1450. DO NOT SEND FEES OR COMPLETED FORMS TO THIS ADDRESS. **SEND TO: Mail Stop Expedited Design, Commissioner for Patents, P.O. Box 1450, Alexandria, VA 22313-1450.**

If you need assistance in completing the form, call 1-800-PTO-9199 and select option 2.

29/247, 138

PTO/SB/27 (05-03)
Approved for use through 04/30/2003. OMB 0651-0031
U.S. Patent and Trademark Office; U.S. DEPARTMENT OF COMMERCE
Under the Paperwork Reduction Act of 1995, no persons are required to respond to a collection of information unless it displays a valid OMB control number.

REQUEST FOR EXPEDITED EXAMINATION OF A DESIGN APPLICATION (37 CFR 1.155)

Application Number	TBD
Filing Date	June 1, 2006
First Named Inventor	John Hlavacs
Title	Portion of a Shoe Upper
Atty Docket Number	015127.00742

HAND DELIVER TO THE DESIGN GROUP DIRECTOR'S OFFICE
-or- ADDRESS TO:
MAIL STOP EXPEDITED DESIGN
COMMISSIONER FOR PATENTS
P.O. Box 1450
Alexandria, VA 22313-1450

This is a request for expedited examination of a design application under 37 CFR 1.155.

NOTE: If the Request made by this form accompanies original application papers, include form PTO/SB/18 "Design Patent Application Transmittal" or its equivalent.

A preexamination search was conducted. The field of search was:

D2/896, 902, 907, 908, 943, 944, 945, 946, 969, 972, 973 and 974

Related applications: ____

If not previously filed for the above-identified application, the following items required by 37 CFR 1.155 are enclosed:

Formal drawings (see 37 CFR 1.84).

The fee set forth in 37 CFR 1.17(k).

An information disclosure statement in compliance with 37 CFR 1.98.

7-6-06
Approved
Jacqueline M. Stone
Jacqueline M. Stone, Director
Technology Center 1700/2900

6/1/06
Date

/Anthony W. Kandare/
Signature

202-824-3000
Telephone Number

Anthony W. Kandare, Reg. No. 48,830
Typed or printed name

WARNING: Information on this form may become public. Credit card information should not be included on this form. Provide credit card information and authorization on PTO-2038.

This collection of information is required by 37 CFR 1.155. The information is required to obtain or retain a benefit by the public which is to file (and by the USPTO to process) an application. Confidentiality is governed by 35 U.S.C. 122 and 37 CFR 1.14. This collection is estimated to take 6 minutes to complete, including gathering, preparing, and submitting the completed application form to the USPTO. Time will vary depending upon the individual case. Any comments on the amount of time you require to complete this form and/or suggestions for reducing this burden, should be sent to the Chief Information Officer, U.S. Patent and Trademark Office, U.S. Department of Commerce, P.O. Box 1450, Alexandria, VA 22313-1450. DO NOT SEND FEES OR COMPLETED FORMS TO THIS ADDRESS. **SEND TO: Mail Stop Expedited Design, Commissioner for Patents, P.O. Box 1450, Alexandria, VA 22313-1450.**

If you need assistance in completing the form, call 1-800-PTO-9199 and select option 2.

29/247,170

PTO/SB/27 (09-04)
Approved for use through 07/31/2006. OMB 0651-0031
U.S. Patent and Trademark Office; U.S. DEPARTMENT OF COMMERCE
Under the Paperwork Reduction Act of 1995, no persons are required to respond to a collection of information unless it displays a valid OMB control number.

REQUEST FOR EXPEDITED EXAMINATION OF A DESIGN APPLICATION (37 CFR 1.155)

Application Number	TBD
Filing Date	June 2, 2006
First Named Inventor	Kathleen H.R. Huthmaker
Title	Portion of a Shoe Upper
Atty Docket Number	015127.00738

ADDRESS TO:
MAIL STOP EXPEDITED DESIGN
COMMISSIONER FOR PATENTS
P.O. Box 1450
Alexandria, VA 22313-1450

This is a request for expedited examination of a design application under 37 CFR 1.155.

NOTE: If the Request made by this form accompanies original application papers, include form PTO/SB/18 "Design Patent Application Transmittal" or its equivalent.

A preexamination search was conducted. The field of search was:

D2/896, 902, 907, 908, 943, 944, 945, 946, 969, 972, 973, and 974

Related applications: ____

If not previously filed for the above-identified application, the following items required by 37 CFR 1.155 are enclosed:
Formal drawings (see 37 CFR 1.84).
The fee set forth in 37 CFR 1.17(k).
An information disclosure statement in compliance with 37 CFR 1.98.

7-6-06
Approved
Jacqueline M. Stone
Jacqueline M. Stone, Director
Technology Center 2700/2900

/Darrell G. Mottley/ — Signature
June 2, 2006 — Date
Darrell G. Mottley — Typed or printed name
42,912 — Registration Number, if applicable
(202) 824-3000 — Telephone Number

WARNING: Information on this form may become public. Credit card information should not be included on this form. Provide credit card information and authorization on PTO-2038.

This collection of information is required by 37 CFR 1.155. The information is required to obtain or retain a benefit by the public which is to file (and by the USPTO to process) an application. Confidentiality is governed by 35 U.S.C. 122 and 37 CFR 1.11 and 1.14. This collection is estimated to take 6 minutes to complete, including gathering, preparing, and submitting the completed application form to the USPTO. Time will vary depending upon the individual case. Any comments on the amount of time you require to complete this form and/or suggestions for reducing this burden, should be sent to the Chief Information Officer, U.S. Patent and Trademark Office, U.S. Department of Commerce, P.O. Box 1450, Alexandria, VA 22313-1450. DO NOT SEND FEES OR COMPLETED FORMS TO THIS ADDRESS. **SEND TO: Mail Stop Expedited Design, Commissioner for Patents, P.O. Box 1450, Alexandria, VA 22313-1450.**
If you need assistance in completing the form, call 1-800-PTO-9199 and select option 2.

UNITED STATES PATENT AND TRADEMARK OFFICE

Commissioner for Patents
United States Patent and Trademark Office
P.O. Box 1450
Alexandria, VA 22313-1450
www.uspto.gov

WM. WRIGLEY JR. COMPANY
1132 WEST BLACKHAWK STREET
CHICAGO IL 60622

COPY MAILED

JAN 1 1 2008

OFFICE OF PETITIONS

In re Application of :
Jonathan E. Rathbone et al. :
Application No. 29/247,179 : ON PETITION
Filed: June 5, 2006 :
Attorney Docket No. TWIN2DES 01 :

This is a decision on the petition under 37 CFR 1.137(b), filed November 30, 2007, to revive the above-identified application.

The petition is **DISMISSED**.

Any request for reconsideration of this decision must be submitted within TWO (2) MONTHS from the mail date of this decision. Extensions of time under 37 CFR 1.136(a) are permitted. The reconsideration request should include a cover letter entitled "Renewed Petition under 37 CFR 1.137(b)." This is **not** a final agency action within the meaning of 5 U.S.C. § 704.

The above-identified application became abandoned for failure to submit the issue fee in a timely manner in reply to the Notice of Allowance mailed June 29, 2007 which set a shortened statutory period for reply of three (3) months. Accordingly, by operation of law, the above-identified application became abandoned on September 30, 2007.

A grantable petition under 37 CFR 1.137(b) must be accompanied by: (1) the required reply, unless previously filed; (2) the petition fee as set forth in 37 CFR 1.17(m); (3) a statement that the entire delay in filing the required reply from the due date for the reply until the filing of a grantable petition pursuant to 37 CFR 1.137(b) was unintentional; and (4) any terminal disclaimer (and fee as set forth in 37 CFR 1.20(d)) required by 37 CFR 1.137(d). Where there is a question as to whether either the abandonment or the delay in filing a petition under 37 CFR 1.137 was unintentional, the Commissioner may require additional information. See MPEP 711.03(c)(III)(C) and (D). The instant petition lacks item(s) (1) and (4). No issue fee was provided and a proper terminal disclaimer is required for all design applications.

Further correspondence with respect to this matter should be addressed as follows:

By Mail: Mail Stop PETITION
Commissioner for Patents
P. O. Box 1450
Alexandria, VA 22313-1450

By hand: U. S. Patent and Trademark Office
Customer Service Window, Mail Stop Petitions
Randolph Building
401 Dulany Street
Alexandria, VA 22314

The centralized facsimile number is **(571) 273-8300.**

Telephone inquiries concerning this decision should be directed to the Carl Friedman at (571) 272-6842.

David Bucci
Petitions Examiner
Office of Petitions

UNITED STATES PATENT AND TRADEMARK OFFICE

Commissioner for Patents
United States Patent and Trademark Office
P.O. Box 1450
Alexandria, VA 22313-1450
www.uspto.gov

COPY MAILED

JUN 25 2008

OFFICE OF PETITIONS

WM. WRIGLEY JR. COMPANY
1132 WEST BLACKHAWK STREET
CHICAGO IL 60622

In re Application of :
Jonathan E. Rathbone et al :
Application No. 29/247,179 : ON PETITION
Filed: June 5, 2006 :
Attorney Docket No. TWIN2DES 01 :

This is a decision on the Renewed petition under 37 CFR 1.137(b), filed January 21, 2008, to revive the above-identified application.

The petition is **GRANTED**.

The above-identified application became abandoned for failure to pay the issue fee in a timely manner in reply to the Notice of Allowance/Allowability mailed June 29, 2007, which set a statutory period for reply of three (3) months. Accordingly, by operation of law, the above-identified application became abandoned on September 30, 2007.

The petition decision mailed January 11, 2008 dismissed the petition filed November 30, 2007, noting that the requirements of 37 CFR 1.137(b)(1) and (4) were lacking.

The instant renewed petition includes the issue fee and a terminal disclaimer and fee .

The petition satisfies the conditions for revival pursuant to the provisions of 37 CFR 1.137(b) in that (1) the reply in the form of the issue fee; (2) the petition fee of $1540; (3) the required statement of unintentional delay; and (4) the terminal disclaimer and fee have been received. Accordingly, the issue fee is accepted as having been unintentionally delayed.

Telephone inquiries concerning this decision should be directed to Carl Friedman at (571) 272-6842.

The application file is being referred to the Office of Data Management for further processing.

Carl Friedman
Petitions Examiner
Office of Petitions

29/247,205

PTO/SB/27 (05-03)
Approved for use through 04/30/2003. OMB 0651-0031
U.S. Patent and Trademark Office; U.S. DEPARTMENT OF COMMERCE
Under the Paperwork Reduction Act of 1995, no persons are required to respond to a collection of information unless it displays a valid OMB control number.

REQUEST FOR EXPEDITED EXAMINATION OF A DESIGN APPLICATION (37 CFR 1.155)

Application Number	TBD
Filing Date	June 6, 2006
First Named Inventor	Michael Joseph DiTullo, Jr.
Title	Portion of a Shoe Upper
Atty Docket Number	015127.00750

HAND DELIVER TO THE DESIGN GROUP DIRECTOR'S OFFICE
-or- ADDRESS TO:
MAIL STOP EXPEDITED DESIGN
COMMISSIONER FOR PATENTS
P.O. Box 1450
Alexandria, VA 22313-1450

This is a request for expedited examination of a design application under 37 CFR 1.155.

NOTE: If the Request made by this form accompanies original application papers, include form PTO/SB/18 "Design Patent Application Transmittal" or its equivalent.

A preexamination search was conducted. The field of search was:

D2/896, 902, 907, 908, 910, 911, 943, 944, 945, 946, 969, 972, 973 and 974

Related applications: _____

If not previously filed for the above-identified application, the following items required by 37 CFR 1.155 are enclosed:

Formal drawings (see 37 CFR 1.84).

The fee set forth in 37 CFR 1.17(k).

An information disclosure statement in compliance with 37 CFR 1.98.

7-6-06
Approved
Jacqueline M. Stone
Jacqueline M. Stone, Director
Technology Center 1700/2900

6/6/06
Date

/Anthony W. Kandare/
Signature

202-824-3000
Telephone Number

Anthony W. Kandare, Reg. No. 48,830
Typed or printed name

WARNING: Information on this form may become public. Credit card information should not be included on this form. Provide credit card information and authorization on PTO-2038.

This collection of information is required by 37 CFR 1.155. The information is required to obtain or retain a benefit by the public which is to file (and by the USPTO to process) an application. Confidentiality is governed by 35 U.S.C. 122 and 37 CFR 1.14. This collection is estimated to take 6 minutes to complete, including gathering, preparing, and submitting the completed application form to the USPTO. Time will vary depending upon the individual case. Any comments on the amount of time you require to complete this form and/or suggestions for reducing this burden, should be sent to the Chief Information Officer, U.S. Patent and Trademark Office, U.S. Department of Commerce, P.O. Box 1450, Alexandria, VA 22313-1450. DO NOT SEND FEES OR COMPLETED FORMS TO THIS ADDRESS. **SEND TO: Mail Stop Expedited Design, Commissioner for Patents, P.O. Box 1450, Alexandria, VA 22313-1450.**

If you need assistance in completing the form, call 1-800-PTO-9199 and select option 2.

UNITED STATES PATENT AND TRADEMARK OFFICE

COMMISSIONER FOR PATENTS
UNITED STATES PATENT AND TRADEMARK OFFICE
P.O. BOX 1450
ALEXANDRIA, VA 22313-1450
www.uspto.gov

JOHN D. TRAN
BUUS, KIM, KUO, & TRAN, LLP
2030 MAIN ST., SUITE 1300
IRVINE, CA 92614

COPY MAILED

JUN 15 2007

OFFICE OF PETITIONS

In re Application of :
John Nguyen :
Application No. 29/247,228 : ON PETITION
Filed: June 7, 2006 :
Attorney Docket No. LA ROSA-001 :

This is a decision on the petition, filed March 1, 2007, to revive the above-identified application under 37 CFR 1.137(b).

The petition is **DISMISSED**.

A grantable petition under 37 CFR 1.137(b)[1] must be accompanied by: (1) the required reply,[2] unless previously filed; (2) the petition fee as set forth in 37 CFR 1.17(m); (3) a statement that the entire delay in filing the required reply from the due date for the reply until the filing of a grantable petition pursuant to 37 CFR 1.137(b) was unintentional; and (4) any terminal disclaimer (and fee as set forth in 37 CFR 1.20(d)) required by 37 CFR 1.137(c). Where there is a question as to whether either the abandonment or the delay in filing a petition under 37 CFR 1.137 was unintentional, the Commissioner may require additional information. See MPEP 711.03(c)(III)(C) and (D).

The petition lacks items 4 above. Since the above-identified application is a design application, 37 CFR 1.137(d) requires a terminal disclaimer dedicating to the public a terminal part of the term of any patent granted thereon equivalent to the period of abandonment of the application. The period of abandonment will be computed to be the number of months from the date of abandonment to the date of filing a grantable petition. A terminal disclaimer fee of $130 ($65 if small entity) is required. If the terminal disclaimer is signed by an assignee, the assignee must comply with the requirements of 37 CFR 3.73(b).

---

[1] As amended effective December 1, 1997. See Changes to Patent Practice and Procedure; Final Rule Notice, 62 Fed. Reg. 53131, 53194-95 (October 10, 1997), 1203 Off. Gaz. Pat. Office 63, 119-20 (October 21, 1997).

[2] In a nonprovisional application abandoned for failure to prosecute, the required reply may be met by the filing of a continuing application. In an application or patent, abandoned or lapsed for failure to pay the issue fee or any portion thereof, the required reply must be the payment of the issue fee or any outstanding balance thereof.

Any request for reconsideration of this decision must be submitted within TWO (2) MONTHS from the mail date of this decision. Extensions of time under 37 CFR 1.136(a) are permitted. The reconsideration request should include a cover letter entitled "Renewed Petition under 37 CFR 1.137(b)." This is **not** a final agency action within the meaning of 5 U.S.C. § 704.

Further correspondence with respect to this matter should be addressed as follows:

By mail:
Mail Stop PETITION
Commissioner for Patents
Post Office Box 1450
Alexandria, VA 22313-1450

By hand:
U.S. Patent and Trademark Office
Customer Service Window, Mail Stop PETITION
Randolph Building
401 Dulany Street
Alexandria, VA 22314

The centralized facsimile number is **(571) 273-8300**.

Any questions concerning this matter may be directed to the undersigned at (571) 272-3204.

Sherry D. Brinkley
Petitions Examiner
Office of Petitions

UNITED STATES PATENT AND TRADEMARK OFFICE

COMMISSIONER FOR PATENTS
UNITED STATES PATENT AND TRADEMARK OFFICE
P.O. BOX 1450
ALEXANDRIA, VA 22313-1450
www.uspto.gov

JOHN D. TRAN
BUUS, KIM, KUO, & TRAN, LLP
2030 MAIN ST., SUITE 1300
IRVINE, CA 92614

COPY MAILED

NOV 27 2007

OFFICE OF PETITIONS

In re Application of
John Nguyen
Application No. 29/247,228
Filed: June 7, 2006
Attorney Docket No. LA ROSA-001

ON PETITION

This is a decision on the renewed petition under 37 CFR 1.137(b), filed June 29, 2007, to revive the above-identified design application.

The petition is **GRANTED**.

The application became abandoned for failure to timely pay the issue fee on or before November 24, 2006, as required by the Notice of Allowance and Fee(s) Due, mailed August 23, 2006, which set a statutory period for reply of three (3) months. A Notice of Abandonment was mailed on February 12, 2007. In response, on March 1, 2007, a petition under 37 CFR 1.137(b) was filed; however, the petition was dismissed in a decision mailed June 15, 2007. On June 29, 2007, the present petition was filed.

The petition now satisfies the requirements of 37 CFR 1.137(b) in that petitioner has supplied (1) the reply in the form of the $400 issue fee, (2) the petition fee of $750, (3) a proper statement of unintentional delay, and (4) a terminal disclaimer and fee as required by 37 CFR 1.137(d). Accordingly, the failure to timely pay the issue fee as required by the Notice of August 23, 2006 is accepted as being unintentionally delayed.

The terminal disclaimer is accepted and has been made of record. Any continuing application filed from this application must contain a copy of the terminal disclaimer. The copy of the terminal disclaimer must be filed with a cover letter requesting the terminal disclaimer be recorded on the continuing application. A copy of this decision should be attached to the cover letter.

The application is being referred to Publishing Division.

Telephone inquires related to this decision should be directed to the undersigned at (571) 272-3204. Telephone inquiries related to processing at Publishing Division should be directed to (571) 272-4200.

Sherry D. Brinkley
Petitions Examiner
Office of Petitions

UNITED STATES PATENT AND TRADEMARK OFFICE

COMMISSIONER FOR PATENTS
UNITED STATES PATENT AND TRADEMARK OFFICE
P.O. BOX 1450
ALEXANDRIA, VA 22313-1450
WWW.USPTO.GOV

Paper No.

KAMRATH & ASSOCIATES P.A.
4825 OLSON MEMORIAL HIGHWAY
SUITE 245
GOLDEN VALLEY MN 55422

COPY MAILED

DEC 0 5 2007

OFFICE OF PETITIONS

In re Application of :
Kiosky Chung :
Application No. 29/247,274 : DECISION ON PETITION
Filed: June 9, 2006 : UNDER 37 C.F.R. § 1.181
Attorney Docket No.: 95-474-00034.DUS (60607) :
Title: BARBECUE GRILL :

This is a decision on the petition filed on August 16, 2007, pursuant to 37 C.F.R. § 1.181, requesting that the holding of abandonment in the above-identified application be withdrawn. A supplement to this petition was submitted on October 4, 2007.

Petitioner will note that the availability of applications and application papers online to applicants/practitioners who diligently associate their Customer Number with the respective application(s) now provides an applicant/practitioner on-demand information as to events/transactions in an application. Thus, now if one wishes to know the progress in and/or status of an application or the accuracy of the data therein, one need only look at the file online.

BACKGROUND

The above-identified application became abandoned for failure to submit the issue fee in a timely manner in reply to the Notice of Allowance and Issue Fee Due, mailed March 27, 2007, which set a shortened statutory period for reply of three months. On June 27, 2007, Applicant submitted form PTOL-85b. The form indicated that payment was intended to be submitted via a credit card, and that form PTO-2038 was attached. However this accompanying form was not received. No extensions of time are permitted for

transmitting issue fees[1]. Accordingly, the above-identified application became abandoned on June 28, 2007. A Notice of Abandonment was mailed on August 3, 2007.

RELEVANT PORTIONS OF THE C.F.R. AND M.P.E.P.

37 C.F.R. § 1.8(b) sets forth, *in toto*:

> (b) In the event that correspondence is considered timely filed by being mailed or transmitted in accordance with paragraph (a) of this section, but not received in the U.S. Patent and Trademark Office after a reasonable amount of time has elapsed from the time of mailing or transmitting of the correspondence, or after the application is held to be abandoned, or after the proceeding is dismissed, terminated, or decided with prejudice, the correspondence will be considered timely if the party who forwarded such correspondence:
>
> (1) Informs the Office of the previous mailing or transmission of the correspondence promptly after becoming aware that the Office has no evidence of receipt of the correspondence;
>
> (2) Supplies an additional copy of the previously mailed or transmitted correspondence and certificate; and
>
> (3) Includes a statement which attests on a personal knowledge basis or to the satisfaction of the Director to the previous timely mailing or transmission. If the correspondence was sent by facsimile transmission, a copy of the sending unit's report confirming transmission may be used to support this statement.

ANALYSIS

With the present petition, Petitioner has asserted that the credit card payment form was submitted along with form PTOL-85b on June 27, 2007.

Certificate of facsimile transmission practice provides a mechanism by which Applicants may evince that a paper was timely submitted to the Office, in the event that the correspondence is not received. Petitioner's submission has been reviewed, and a copy of the credit card payment form has not been located in the electronic file. Moreover, it is noted that the copy of form PTOL-85b which Petitioner submitted with this petition contains a stamp from the PTO which reads "The PTO did not receive the following listed item(s): no credit card." As such, it does not appear that the credit card form was received on June 27, 2007.

Petitioner has met the requirements of Rule § 1.8(b)(1). The requirements of Rule § 1.8(b)(2) have not been met, and the undersigned cannot determine if the requirements of Rule § 1.8(b)(3) have been met.

---

1 See MPEP §710.02(e).

If Petitioner is in possession of a copy of the credit card payment form that was purportedly submitted to the Office on June 27, 2007 along with the copy of form PTOL-85b, and said credit card form contains a certificate of facsimile transmission, Petitioner should submit this paper along with the renewed petition.

Petitioner should note that he should clearly label this form as a copy, and clearly indicate in bold notation that the paper is not to be removed from the file prior to scanning into the electronic file.

The petition must be **DISMISSED.**

Any reply to this decision must be submitted within **TWO MONTHS** from the mail date of this decision. Extensions of time under 37 C.F.R. § 1.136(a) are permitted.

The reply should include a cover letter entitled "Renewed Petition Under 37 C.F.R. § 1.181(a)." This is not a final agency action within the meaning of 5 U.S.C § 704.

Alternatively, Petitioner may wish to consider filing a petition under 37 C.F.R. §§ 1.137(a) and/or (b).

Any future submission concerning this matter should indicate in a prominent manner that the attorney handling this matter is Paul Shanoski, and may be submitted by mail[2], hand-delivery[3], or facsimile[4].

Telephone inquiries regarding *this decision* should be directed to the undersigned at (571) 272-3225[5]. All other inquiries

---

2 Mail Stop Petition, Commissioner for Patents, United States Patent and Trademark Office, P.O. Box 1450, Alexandria, VA, 22313-1450.
3 Customer Window, Randolph Building, 401 Dulaney Street, Alexandria, VA, 22314.
4 (571) 273-8300- please note this is a central facsimile number.
5 Petitioner will note that all practice before the Office should be in writing, and the action of the Office will be based exclusively on the written record in the Office. See 37 C.F.R. § 1.2. As such, Petitioner is reminded that no telephone discussion may be controlling or considered authority for Petitioner's further action(s).

concerning examination procedures or status of the application should be directed to the Technology Center.

Paul Shanoski
Senior Attorney
Office of Petitions
United States Patent and Trademark Office

UNITED STATES PATENT AND TRADEMARK OFFICE

COMMISSIONER FOR PATENTS
UNITED STATES PATENT AND TRADEMARK OFFICE
P.O. BOX 1450
ALEXANDRIA, VA 22313-1450
WWW.USPTO.GOV

Paper No.

KAMRATH & ASSOCIATES P.A.
4825 OLSON MEMORIAL HIGHWAY
SUITE 245
GOLDEN VALLEY MN 55422

COPY MAILED

DEC 21 2007

OFFICE OF PETITIONS

In re Application of :
Kiosky Chung :
Application No. 29/247,274 : DECISION ON RENEWED PETITION
Filed: June 9, 2006 : UNDER 37 C.F.R. § 1.181
Attorney Docket No.: 95-474-00034.DUS (60607) :
Title: BARBECUE GRILL :

This is a decision on the renewed petition filed on December 13, 2007, pursuant to 37 C.F.R. § 1.181, requesting that the holding of abandonment in the above-identified application be withdrawn.

Petitioner will note that the availability of applications and application papers online to applicants/practitioners who diligently associate their Customer Number with the respective application(s) now provides an applicant/practitioner on-demand information as to events/transactions in an application. Thus, now if one wishes to know the progress in and/or status of an application or the accuracy of the data therein, one need only look at the file online.

BACKGROUND AND PROCEDURAL HISTORY

The above-identified application became abandoned for failure to submit the issue fee in a timely manner in reply to the Notice of Allowance and Issue Fee Due, mailed March 27, 2007, which set a shortened statutory period for reply of three months. On June 27, 2007, Applicant submitted form PTOL-85b. The form indicated that payment was intended to be submitted via a credit card, and that form PTO-2038 was attached. However this accompanying form was not received. No extensions of time are permitted for transmitting issue fees[1]. Accordingly, the above-identified

1 See MPEP § 710.02(e).

application became abandoned on June 28, 2007. A Notice of Abandonment was mailed on August 3, 2007.

An original petition was filed on August 16, 2007 (a supplement to the original petition was submitted on October 4, 2007). The original petition was dismissed via the mailing of a decision on December 6, 2007. The decision indicated that Petitioner had failed to comply with the requirements of 37 C.F.R. § 1.8(b)(2), in that although he had asserted that the credit card payment form was submitted along with form PTOL-85b on June 27, 2007, it did not appear that he had submitted a copy of the same with the original petition.

With this renewed petition, Petitioner has submitted a copy of the credit card payment form that was submitted to the Office on June 27, 2007. Consequently, Petitioner has met the requirements of 37 C.F.R. § 1.8.

It follows that this renewed petition pursuant to 37 C.F.R. § 1.181(a) is **GRANTED**. The holding of abandonment is hereby **WITHDRAWN**.

The Office of Patent Publication will be notified of this decision so that the present application can be processed into a patent.

Telephone inquiries regarding *this decision* should be directed to the undersigned at (571) 272-3225[2]. All other inquiries concerning the status of the application should be directed to the Office of Patent Publication at 571-272-4200.

Paul Shanoski
Senior Attorney
Office of Petitions

---

2 Petitioner will note that all practice before the Office should be in writing, and the action of the Office will be based exclusively on the written record in the Office. See 37 C.F.R. § 1.2. As such, Petitioner is reminded that no telephone discussion may be controlling or considered authority for any further action(s) of Petitioner.

29/247,288

PTO/SB/27 (05-03)
Approved for use through 04/30/2003. OMB 0651-0031
U.S. Patent and Trademark Office; U.S. DEPARTMENT OF COMMERCE
Under the Paperwork Reduction Act of 1995, no persons are required to respond to a collection of information unless it displays a valid OMB control number.

REQUEST FOR EXPEDITED EXAMINATION OF A DESIGN APPLICATION (37 CFR 1.155)

Application Number	TO BE ASSIGNED
Filing Date	June 9, 2006
First Named Inventor	Mami L. Gerber
Title	Portion Of A Shoe Upper
Atty Docket Number	015127.00724

HAND DELIVER TO THE DESIGN GROUP DIRECTOR'S OFFICE
-or- ADDRESS TO:
MAIL STOP EXPEDITED DESIGN
COMMISSIONER FOR PATENTS
P.O. Box 1450
Alexandria, VA 22313-1450

This is a request for expedited examination of a design application under 37 CFR 1.155.

NOTE: If the Request made by this form accompanies original application papers, include form PTO/SB/18 "Design Patent Application Transmittal" or its equivalent.

A preexamination search was conducted. The field of search was:

Class D2/896, 902, 907, 908, 913, 916, 917, 918, 943, 944, 945, 946, 969, 972, 973 and 974.

Related applications:

If not previously filed for the above-identified application, the following items required by 37 CFR 1.155 are enclosed:

Formal drawings (see 37 CFR 1.84).

The fee set forth in 37 CFR 1.17(k).

An information disclosure statement in compliance with 37 CFR 1.98.

7-6-06
Approved
Jacqueline M. Stone
Jacqueline M. Stone, Director
Technology Center 1700/2900

June 9, 2006
Date

\David R. Gerk\
Signature

202-824-3000
Telephone Number

David R. Gerk-Registration No. 56,901
Typed or printed name

WARNING: Information on this form may become public. Credit card information should not be included on this form. Provide credit card information and authorization on PTO-2038.

This collection of information is required by 37 CFR 1.155. The information is required to obtain or retain a benefit by the public which is to file (and by the USPTO to process) an application. Confidentiality is governed by 35 U.S.C. 122 and 37 CFR 1.14. This collection is estimated to take 6 minutes to complete, including gathering, preparing, and submitting the completed application form to the USPTO. Time will vary depending upon the individual case. Any comments on the amount of time you require to complete this form and/or suggestions for reducing this burden, should be sent to the Chief Information Officer, U.S. Patent and Trademark Office, U.S. Department of Commerce, P.O. Box 1450, Alexandria, VA 22313-1450. DO NOT SEND FEES OR COMPLETED FORMS TO THIS ADDRESS. **SEND TO: Mail Stop Expedited Design, Commissioner for Patents, P.O. Box 1450, Alexandria, VA 22313-1450.**

If you need assistance in completing the form, call 1-800-PTO-9199 and select option 2.

29/247,300

PTO/SB/27 (05-03)
Approved for use through 04/30/2003. OMB 0651-0031
U.S. Patent and Trademark Office; U.S. DEPARTMENT OF COMMERCE
Under the Paperwork Reduction Act of 1995, no persons are required to respond to a collection of information unless it displays a valid OMB control number.

REQUEST FOR EXPEDITED EXAMINATION OF A DESIGN APPLICATION (37 CFR 1.155)

Application Number	TO BE ASSIGNED
Filing Date	June 9, 2006
First Named Inventor	Jeff Rasmussen
Title	Portion Of A Shoe Upper
Atty Docket Number	015127.00728

HAND DELIVER TO THE DESIGN GROUP DIRECTOR'S OFFICE
-or- ADDRESS TO:
MAIL STOP EXPEDITED DESIGN
COMMISSIONER FOR PATENTS
P.O. Box 1450
Alexandria, VA 22313-1450

This is a request for expedited examination of a design application under 37 CFR 1.155.

NOTE: If the Request made by this form accompanies original application papers, include form PTO/SB/18 "Design Patent Application Transmittal" or its equivalent.

A preexamination search was conducted. The field of search was:

Class D2/896, 902, 907, 908, 910, 911, 943, 944, 945, 946, 969, 972, 973 and 974.

Related applications:

If not previously filed for the above-identified application, the following items required by 37 CFR 1.155 are enclosed:

Formal drawings (see 37 CFR 1.84).

The fee set forth in 37 CFR 1.17(k).

An information disclosure statement in compliance with 37 CFR 1.98.

7-6-06
Approved
Jacqueline M. Stone
Jacqueline M. Stone, Director
Technology Center 1700/2900

June 9, 2006
Date

\David R. Gerk\
Signature

202-824-3000
Telephone Number

David R. Gerk-Registration No. 56,901
Typed or printed name

WARNING: Information on this form may become public. Credit card information should not be included on this form. Provide credit card information and authorization on PTO-2038.

This collection of information is required by 37 CFR 1.155. The information is required to obtain or retain a benefit by the public which is to file (and by the USPTO to process) an application. Confidentiality is governed by 35 U.S.C. 122 and 37 CFR 1.14. This collection is estimated to take 6 minutes to complete, including gathering, preparing, and submitting the completed application form to the USPTO. Time will vary depending upon the individual case. Any comments on the amount of time you require to complete this form and/or suggestions for reducing this burden, should be sent to the Chief Information Officer, U.S. Patent and Trademark Office, U.S. Department of Commerce, P.O. Box 1450, Alexandria, VA 22313-1450. DO NOT SEND FEES OR COMPLETED FORMS TO THIS ADDRESS. **SEND TO: Mail Stop Expedited Design, Commissioner for Patents, P.O. Box 1450, Alexandria, VA 22313-1450.**

If you need assistance in completing the form, call 1-800-PTO-9199 and select option 2.

29/247,304

PTO/SB/27 (05-03)
Approved for use through 04/30/2003. OMB 0651-0031
U.S. Patent and Trademark Office; U.S. DEPARTMENT OF COMMERCE
Under the Paperwork Reduction Act of 1995, no persons are required to respond to a collection of information unless it displays a valid OMB control number.

REQUEST FOR EXPEDITED EXAMINATION OF A DESIGN APPLICATION (37 CFR 1.155)

Application Number	TO BE ASSIGNED
Filing Date	June 9, 2006
First Named Inventor	Jeff Rasmussen
Title	Portion Of A Shoe Outsole
Atty Docket Number	015127.00729

HAND DELIVER TO THE DESIGN GROUP DIRECTOR'S OFFICE
-or- ADDRESS TO:
MAIL STOP EXPEDITED DESIGN
COMMISSIONER FOR PATENTS
P.O. Box 1450
Alexandria, VA 22313-1450

This is a request for expedited examination of a design application under 37 CFR 1.155.

NOTE: If the Request made by this form accompanies original application papers, include form PTO/SB/18 "Design Patent Application Transmittal" or its equivalent.

A preexamination search was conducted. The field of search was:

Class D2/902, 908, 947, 951, 952, 953, 954, 955, 956, 957, 958, 959 and 960

Related applications:

If not previously filed for the above-identified application, the following items required by 37 CFR 1.155 are enclosed:

Formal drawings (see 37 CFR 1.84).

The fee set forth in 37 CFR 1.17(k).

An information disclosure statement in compliance with 37 CFR 1.98.

7-6-06
Approved
Jacqueline M. Stone
Jacqueline M. Stone, Director
Technology Center 1700/2900

June 9, 2006
Date

\David R. Gerk\
Signature

202-824-3000
Telephone Number

David R. Gerk-Registration No. 56,901
Typed or printed name

WARNING: Information on this form may become public. Credit card information should not be included on this form. Provide credit card information and authorization on PTO-2038.

This collection of information is required by 37 CFR 1.155. The information is required to obtain or retain a benefit by the public which is to file (and by the USPTO to process) an application. Confidentiality is governed by 35 U.S.C. 122 and 37 CFR 1.14. This collection is estimated to take 6 minutes to complete, including gathering, preparing, and submitting the completed application form to the USPTO. Time will vary depending upon the individual case. Any comments on the amount of time you require to complete this form and/or suggestions for reducing this burden, should be sent to the Chief Information Officer, U.S. Patent and Trademark Office, U.S. Department of Commerce, P.O. Box 1450, Alexandria, VA 22313-1450. DO NOT SEND FEES OR COMPLETED FORMS TO THIS ADDRESS. **SEND TO: Mail Stop Expedited Design, Commissioner for Patents, P.O. Box 1450, Alexandria, VA 22313-1450.**

If you need assistance in completing the form, call 1-800-PTO-9199 and select option 2.

SPE RESPONSE FOR CERTIFICATE OF CORRECTION

Paper No.: _____

DATE : 6-6-07

TO SPE OF : ART UNIT 2911

SUBJECT : Request for Certificate of Correction for Appl. No. D540981 S (297312)

Please respond to this request for a certificate of correction within 7 days.

Please review the requested changes/corrections as shown in the **COCIN** document(s) in the IFW application image. No new matter should be introduced, nor should the scope or meaning of the claims be changed.

Please complete the response (see below) and forward the completed response to scanning using document code **COCX**.

Assignee

Thank You For Your Assistance A/S/A/P.

E M James
Certificates of Correction Branch
703-308-9390 ext. 116

The request for issuing the above-identified correction(s) is hereby:
Note your decision on the appropriate box.

- ☑ **Approved** — **All** changes apply.
- ☐ **Approved in Part** — Specify below which changes **do not** apply.
- ☐ **Denied** — State the reasons for denial below.

Comments: _____

SPE

2911
Art Unit

UNITED STATES PATENT AND TRADEMARK OFFICE

Commissioner for Patents
United States Patent and Trademark Office
P.O. Box 1450
Alexandria, VA 22313-1450
www.uspto.gov

6-28-07

Patent No. : D540,981 S
Ser. No. : 29/247,312
Inventor(s) : Aundrea Rosdal
Issued : April 17, 2007
Title : CASE FOR HEATED APPLIANCES
Docket No. : 3377.2 I DP

Re: Request for Certificate of Correction

Consideration has been given your request for the issuance of a certificate of correction for the above-identified patent under the provisions of Rule(s) 1.322 or 1.323.

Assignees' names and addresses (assignment data) printed in a patent, are based *solely* on information supplied in the appropriate space for identifying the assignment data, i.e., item 3 of the Issue Fee Transmittal Form PTOL-85B. Granting of a request under 37 CFR 3.81(b) is required to correct applicant's error providing ***incorrect or erroneous*** assignment data, *before* issuance of a Certificate of Correction, under 37 CFR 1.323 *(see Manual of Patent Examining Procedures (M.P.E.P) Chp.1400, sect. 1481).* This procedure is required *at any time after the issue fee is paid*, including after issuance of the patent.

In view of the foregoing, your request is hereby denied.

A request to correct the Assignee under 37 CFR 3.81(b) should include:

A. **the processing fee set forth in 37 CFR 1.117(h) (currently $130);**
B. a statement that the failure to include the correct assignee name on the PTOL-85B was inadvertent; and
C. a copy of the Notice of Recordation of Assignment Document, reflecting the reel and frame number where the assignment(s) is recorded and/or reflecting proof of *the date* the assignment was submitted for recordation.

In the Request, Applicant(s) may request that the file be forwarded to Certificates of Correction Branch, for issuance of a Certificate of Correction, if the Request is granted.

Any request under 37 CFR 3.81(b) should be directed to the following address or facsimile number:

By mail: Mail Stop PETITIONS
Commissioner for Patents
Post Office Box 1450
Alexandria, VA 22313-1450

By hand: Customer Service Window
Mail Stop Petitions
Randolph Building
401 Dulany Street
Alexandria, VA 22314

By fax: (703) 872-9306
ATTN: Office of Petitions

If a fee (currently $100) was previously submitted for consideration of a Request for Certificate of Correction, under CFR 1.323, to correct assignment data, , no additional fee is required.

Eva James
For Cecelia Newman
Decisions & Certificates
of Correction Branch
(703) **308-9390 ext. 124** or 105

Michael W. Starkweather
& Associates
9035 South 1300 East, Suite 200
Sandy, Utah 84094

ej

29/247,320

PTO/SB/27 (09-04)
Approved for use through 07/31/2006. OMB 0651-0031
U.S. Patent and Trademark Office; U.S. DEPARTMENT OF COMMERCE
Under the Paperwork Reduction Act of 1995, no persons are required to respond to a collection of information unless it displays a valid OMB control number.

REQUEST FOR EXPEDITED EXAMINATION OF A DESIGN APPLICATION (37 CFR 1.155)		
	Application Number	TO BE ASSIGNED
	Filing Date	June 9, 2006
	First Named Inventor	Jason Carter Mayden
	Title	PORTION OF A SHOE UPPER
	Atty Docket Number	015127.00749

ADDRESS TO:
MAIL STOP EXPEDITED DESIGN
COMMISSIONER FOR PATENTS
P.O. Box 1450
Alexandria, VA 22313-1450

This is a request for expedited examination of a design application under 37 CFR 1.155.

NOTE: If the Request made by this form accompanies original application papers, include form PTO/SB/18 "Design Patent Application Transmittal" or its equivalent.

A preexamination search was conducted. The field of search was:

D2/896, 902, 907, 908, 910, 911, 943, 944, 945, 946, 969, 972, 973 and 974

Related applications: ____

If not previously filed for the above-identified application, the following items required by 37 CFR 1.155 are enclosed:
Formal drawings (see 37 CFR 1.84).
The fee set forth in 37 CFR 1.17(k).
An information disclosure statement in compliance with 37 CFR 1.98.

7-6-06
Approved
Jacqueline M. Stone
Jacqueline M. Stone, Director
Technology Center 1700/2900

[signature]
Signature

6/9/06
Date

Robert S. Katz
Typed or printed name

36,402
Registration Number, if applicable

(202) 824-3000
Telephone Number

WARNING: Information on this form may become public. Credit card information should not be included on this form. Provide credit card information and authorization on PTO-2038.

This collection of information is required by 37 CFR 1.155. The information is required to obtain or retain a benefit by the public which is to file (and by the USPTO to process) an application. Confidentiality is governed by 35 U.S.C. 122 and 37 CFR 1.11 and 1.14. This collection is estimated to take 6 minutes to complete, including gathering, preparing, and submitting the completed application form to the USPTO. Time will vary depending upon the individual case. Any comments on the amount of time you require to complete this form and/or suggestions for reducing this burden, should be sent to the Chief Information Officer, U.S. Patent and Trademark Office, U.S. Department of Commerce, P.O. Box 1450, Alexandria, VA 22313-1450. DO NOT SEND FEES OR COMPLETED FORMS TO THIS ADDRESS. SEND TO: Mail Stop Expedited Design, Commissioner for Patents, P.O. Box 1450, Alexandria, VA 22313-1450.
If you need assistance in completing the form, call 1-800-PTO-9199 and select option 2.

UNITED STATES PATENT AND TRADEMARK OFFICE

COMMISSIONER FOR PATENTS
UNITED STATES PATENT AND TRADEMARK OFFICE
P.O. BOX 1450
ALEXANDRIA, VA 22313-1450
www.uspto.gov

Kwadjo Adusei-Poku
Masco Corporation
21001 Van Born Road
Taylor MI 48180

COPY MAILED

DEC 10 2007

OFFICE OF PETITIONS

In re Application of :
Haug, et al. : DECISION ON PETITION
Application No. 29/247,325 :
Filed: June 12, 2006 :
Docket No.: 154-3119-D :

This is a decision on the petition to withdraw the holding of abandonment under 37 CFR 1.181, filed October 25, 2007.

This application became abandoned May 16, 2007 for failure to timely submit a proper reply to the non-final Office action mailed March 15, 2007. The non-final Office action set a two month shortened statutory period of time for reply. Notice of Abandonment was mailed October 18, 2007.

Petitioners assert that a response to the non-final Office action was timely submitted on April 23, 2007 and have provided as proof of mailing and proof of USPTO receipt a return postcard dated April 23, 2007 acknowledging receipt of the reply. Further, the copy of the reply submitted herewith bears a certificate of mailing date of April 18, 2007 in accordance with 37 CFR 1.8.

The original response submitted April 23, 2007 has been located in the application file. The response, however, was incomplete, failing to comply with 37 CFR 1.121(d) wherein it states in pertinent part that "[o]ne or more application drawings shall be amended in the following manner: Any changes to an application drawing must be in compliance with § 1.84 and must be submitted on a replacement sheet of drawings which shall be an attachment to the amendment document and, in the top margin, labeled "Replacement Sheet"." *Emphasis added.* A review of the response does not establish that the replacement sheets of drawings were attached to an amendment document in accordance with 37 CFR 1.121(d).

In view of the evidence thereof, the petition to withdraw the holding of abandonment is hereby **DISMISSED**.

Any renewed petition must establish that a complete reply to the non-final Office action was timely submitted.

Any request for reconsideration of this decision must be submitted within **TWO (2) MONTHS** from mail date of this decision.

Extensions of time under 37 CFR 1.136(a) are permitted. The reconsideration request should include a cover letter entitled "Renewed Petition under 37 CFR 1.181." This is not a final agency decision.

ALTERNATE VENUE

Petitioners may wish to consider filing a petition stating that the entire delay was unintentional. Petitioners' attention is directed to 37 CFR 1.137(b) which provides for the revival of an "unintentionally" abandoned application without a showing that the delay in prosecution or in late payment of an issue fee was "unavoidable". An "unintentional" petition under 37 CFR 1.137(b) must be accompanied by the required petition fee and reply.

The filing of a petition under 37 CFR 1.137(b) cannot be intentionally delayed and therefore must be filed promptly. A person seeking revival due to unintentional delay cannot make a statement that the delay was unintentional unless the entire delay, including the delay from the date it was discovered that the application was abandoned until the filing of the petition to revive under 37 CFR 1.137(b), was unintentional. A statement that the delay was unintentional is not appropriate if petitioners intentionally delayed the filing of a petition for revival under 37 CFR 1.137(b).

Further correspondence with respect to this matter should be addressed as follows:

By mail:	**Mail Stop Petition** Commissioner for Patents P.O. Box 1450 Alexandria, VA 22313-1450
By facsimile:	(571) 273-8300
By hand delivery:	U.S. Patent and Trademark Office Customer Window, **Mail Stop Petition** Randolph Building 401 Dulany Street Alexandria, VA 22314

Telephone inquiries concerning this matter may be directed to the undersigned at (571) 272-3205.

Alesia M. Brown
Petitions Attorney
Office of Petitions

UNITED STATES PATENT AND TRADEMARK OFFICE

COMMISSIONER FOR PATENTS
UNITED STATES PATENT AND TRADEMARK OFFICE
P.O. BOX 1450
ALEXANDRIA, VA 22313-1450
www.uspto.gov

Kwadjo Adusei-Poku
Masco Corporation
21001 Van Born Road
Taylor MI 48180

COPY MAILED

JUN 20 2008

In re Application of :
Haug, et al. : DECISION ON PETITION
Application No. 29/247,325 :
Filed: June 12, 2006 :
Docket No.: 154-3119-D :

This is a decision on the petition to withdraw the holding of abandonment under 37 CFR 1.181, filed March 5, 2008.

The Notice of Abandonment mailed October 18, 2007 indicates that the application is abandoned for failure to timely reply to the Office communication mailed March 15, 2007.

Petitioners assert that a response to the Office communication was timely submitted on April 23, 2007 and have provided as proof of mailing and proof of USPTO receipt a return postcard dated April 23, 2007 acknowledging receipt of the reply. Further, the copy of the reply submitted herewith bears a certificate of mailing date of April 18, 2007 in accordance with 37 CFR 1.8.

The reply to the Office communication filed April 23, 2007 has been located in the official application file.

In view of the evidence thereof, the petition to withdraw the holding of abandonment is hereby **GRANTED**.

The Notice of Abandonment is hereby **VACATED** and the holding of abandonment is **WITHDRAWN**.

The application file is being forwarded to Technology Center 2900 for further processing.

Telephone inquiries concerning this matter may be directed to the undersigned at (571) 272-3205.

Alesia M. Brown
Petitions Attorney
Office of Petitions

UNITED STATES PATENT AND TRADEMARK OFFICE

Commissioner for Patents
United States Patent and Trademark Office
P.O. Box 1450
Alexandria, VA 22313-1450
www.uspto.gov

SHERIDAN ROSS PC
1560 BROADWAY
SUITE 1200
DENVER CO 80202

COPY MAILED

AUG 01 2008

In re Application of :
Edward Levy, et al. :
Application No. 29/247,352 : DECISION ON PETITION
Filed: June 13, 2006 : TO WITHDRAW
Attorney Docket No. 5486-6 : FROM RECORD
:

This is a decision on the Request to Withdraw as attorney or agent of record under 37 C.F.R. § 1.36(b), filed March 13, 2008.

The request is **NOT APPROVED.**

A grantable request to withdraw as attorney/agent of record must be signed by every attorney/agent seeking to withdraw or contain a clear indication that one attorney is signing on behalf of another/others. A request to withdraw will not be approved unless at least 30 (thirty) days would remain between the date of approval and the later of the expiration date of a time to file a response or the expiration date of the maximum time period which can be extended under 37 C.F.R. § 1.136(a).

The request cannot be approved because no reasons for withdrawal have been provided. The Office cannot, at this time, determine whether practitioner's request is one of the mandatory or permissive reasons enumerated in 37 CFR 10.40. Any subsequent requests must include reasons for withdrawal. Please note that there is a space provided for on PTO/SB/83 (Request to Withdraw as Attorney or Agent) to supply practitioner's reasons.

All future communications from the Office will continue to be directed to the above-listed address until otherwise notified by applicant.

Telephone inquiries concerning this decision should be directed to Terri Williams at 571-272- 2991.

Terri Williams
Petitions Examiner
Office of Petitions

cc: **Campbell Levy Designs LLC**
6032 E. Hinsdale Avenue
Centennial, CO 80112

SPE RESPONSE FOR CERTIFICATE OF CORRECTION

Paper No.: _____

DATE : 5-29-08

TO SPE OF : ART UNIT 2914

SUBJECT : Request for Certificate of Correction for Appl. No.: 29/247359 Patent No.: D563527

Please respond to this request for a certificate of correction within 7 days.

Please review the requested changes/corrections as shown in the **COCIN** document(s) in the IFW application image. No new matter should be introduced, nor should the scope or meaning of the claims be changed.

Please Check Drawings

Please complete the response (see below) and forward the completed response to scanning using document code **COCX**.

Ennis Young
Certificates of Correction Branch
703-308-9390 ext. 117

Thank You For Your Assistance

The request for issuing the above-identified correction(s) is hereby:

Note your decision on the appropriate box.

☒	Approved RAD	All changes apply.
☐	Approved in Part	Specify below which changes do not apply.
☐	Denied	State the reasons for denial below.

Comments: _____

_____

_____

_____

_____

SPE 2914 Art Unit

UNITED STATES PATENT AND TRADEMARK OFFICE

Commissioner for Patents
United States Patent and Trademark Office
P.O. Box 1450
Alexandria, VA 22313-1450
www.uspto.gov

DORSEY & WHITNEY, LLP
INTELLECTUAL PROPERTY DEPARTMENT
370 SEVENTEENTH STREET
SUITE 4700
DENVER CO 80202-5647

COPY MAILED

AUG 0 2 2007

OFFICE OF PETITIONS

In re Application of :
Ryan R. Dibble, et al. :
Application No. 29/247,398 : DECISION ON PETITION
Filed: June 15, 2006 :
Attorney Docket No. 186314/US/2 :

This is a decision on the petition under the unintentional provisions of 37 CFR 1.137(b), filed April 11, 2007, to revive the above-identified application.

The petition is **GRANTED**.

This application became abandoned for failure to timely pay the issue on or before February 26, 2007, as required by the Notice of Allowance and Fee(s) Due, mailed November 24, 2006. Accordingly, the date of abandonment of this application is February 27, 2007.

The petition satisfies the requirements of 37 CFR 1.137(b) in that petitioner has supplied (1) the reply in the form of payment of the issue fee of $800, (2) the petition fee of $1500; (3) a proper statement of unintentional delay and (4) terminal disclaimer.

Telephone inquiries concerning this decision should be directed to April Wise at (571) 272-1642.

This application is being referred to Publishing Division for processing into a patent.

Irvin Dingle
Petitions Examiner
Office of Petitions

UNITED STATES PATENT AND TRADEMARK OFFICE

Commissioner for Patents
United States Patent and Trademark Office
P.O. Box 1450
Alexandria, VA 22313-1450
www.uspto.gov

CERMAK KENEALY & VAIDYA LLP
515 E. BRADDOCK RD
SUITE B
ALEXANDRIA, VA 22314

COPY MAILED

JUN 20 2008

OFFICE OF PETITIONS

In re Application of

Meise, et al.

Application No. 29/247,425

Filing Date: June 16, 2006

Attorney Docket No. 028-013

This is a decision on the petition under 37 CFR §1.137(b), September 5, 2007, in the above-identified application.

The petition is **dismissed.**

Any request for reconsideration of this decision must be submitted within TWO (2) MONTHS from the mail date of this decision. Extensions of time under 37 CFR 1.136(a) are permitted. The reconsideration request should include a cover letter entitled "Renewed Petition" under 37 CFR 1.137(b)."

This application became abandoned for failure to respond in a timely manner to the Notice of Allowability mailed April 11, 2007. The notice allowed a statutory period for reply of three-months from its mailing date. No reply was received within the allowable period, and the application became abandoned on July 12, 2007. A Notice of Abandonment was mailed on August 8, 2007.

Effective December 1, 1997, the provisions of 37 CFR 1.137(b) now provide that where the delay in reply was unintentional, a petition may be filed to revive an abandoned application or a lapsed patent pursuant to 37 CFR 1.137(b). A grantable petition pursuant to 37 CFR 1.137(b) must be accompanied by:

(1) the required reply, unless previously filed. In a non-provisional application abandoned for failure to prosecute, the required reply may be met by the filing of a continuing application. In an application or patent, abandoned or lapsed for failure to pay the issue fee, or any portion thereof, the required reply must be the payment of the issue fee or any outstanding balance thereof.

(2) the petition fee as set forth in 37 CFR 1.17(m);

(3) a statement that the entire delay in filing the required reply from the due date for the reply until the filing of a grantable petition pursuant to 37 CFR 1.137(b) was unintentional. The Commissioner may require additional information where there is a question whether the delay was unintentional; and

(4) any terminal disclaimer (and fee set forth in 37 CFR 1.20(d)) required pursuant to 37 CFR 1.137(d).

The instant petition does not satisfy the requirements of item (4) above.

As to item (4), the terminal disclaimer was not found with the petition papers. The subject application is a design application, therefore; a terminal disclaimer is required in order to revive the application. Any renewed petition filed must be accompanied by the completed terminal disclaimer form, which is enclosed for petitioner's convenience. Pursuant to 37 CFR 1.137(d), the terminal disclaimer must dedicate to the public a terminal part of the term of any patent granted from this application that is equivalent to the period of abandonment of the application.

Further correspondence with respect to this matter should be addressed as follows:

By mail: Mail Stop Petitions
Commissioner for Patents
United States Patent and Trademark Office
Box 1450
Alexandria, VA 22313-1450

By facsimile: (571) 273-8300

Telephone inquiries concerning this matter may be directed to the undersigned at (571) 272-3222.

Kenya A. McLaughlin
Petitions Attorney
Office of Petitions

Enclosure: "Terminal Disclaimer to Accompany Petition"

PTO/SB/63 (01-08)
Approved for use through 06/30/2008. OMB 0651-0031
U.S. Patent and Trademark Office; U.S. DEPARTMENT OF COMMERCE
Under the Paperwork Reduction Act of 1995, no persons are required to a collection of information unless it displays a valid OMB control number.

TERMINAL DISCLAIMER TO ACCOMPANY PETITION	Docket Number (Optional)

In re Application of:

Name:

Application Number:

Filed:

For:

The owner*, _____ of _____ percent interest in the above-identified application hereby disclaims a terminal part of the term of any patent granted the above-identified application equivalent to: (1) if the above-identified application is a design application, the period of abandonment of the above-identified application, and (2) if the above-identified application is a utility or plant application, the lesser of: (a) the period of abandonment of the application; or (b) the period extending beyond twenty years from the date on which the above-identified application was filed in the United States or, if the application contains a specific reference to an earlier filed application(s) under 35 U.S.C. 120, 121, or 365(c), from the date on which the earliest such application was filed. This disclaimer also applies to any patent granted on a utility or plant application filed before June 8, 1995, or a design application, that contains a specific reference under 35 U.S.C. 120, 121, or 365(c) to the above-identified application. This disclaimer is binding upon the grantee, and its successors or assigns.

Check either box 1 or 2 below, if appropriate.

1. ☐ For submissions on behalf of an organization (e.g., corporation, partnership, university, government agency, etc.), the undersigned is empowered to act on behalf of the organization.

2. ☐ The undersigned is an attorney or agent of record. Registration Number_____.

_____ _____
Signature Date

_____ _____
Typed or Printed Name Telephone Number

☐ Terminal disclaimer fee under 37 CFR 1.20(d) included.

WARNING: Information on this form may become public. Credit card information should not be included on this form. Provide credit card information and authorization on PTO-2038.

* Statement under 37 CFR 3.73(b) is required if terminal disclaimer is signed by the assignee (owner). Form PTO/SB/96 may be used for making this certification. See MPEP § 324.

This collection of information is required by 37 CFR 1.137. The information is required to obtain or retain a benefit by the public which is to file (and by the USPTO to process) an application. Confidentiality is governed by 35 U.S.C. 122 and 37 CFR 1.11 and 1.14. This collection is estimated to take 12 minutes to complete, including gathering, preparing, and submitting the completed application form to the USPTO. Time will vary depending upon the individual case. Any comments on the amount of time you require to complete this form and/or suggestions for reducing this burden, should be sent to the Chief Information Officer, U.S. Patent and Trademark Office, U.S. Department of Commerce, P.O. Box 1450, Alexandria, VA 22313-1450. DO NOT SEND FEES OR COMPLETED FORMS TO THIS ADDRESS. **SEND TO: Commissioner for Patents, P.O. Box 1450, Alexandria, VA 22313-1450.**

If you need assistance in completing the form, call 1-800-PTO-9199 and select option 2.

Privacy Act Statement

The **Privacy Act of 1974 (P.L. 93-579)** requires that you be given certain information in connection with your submission of the attached form related to a patent application or patent. Accordingly, pursuant to the requirements of the Act, please be advised that: (1) the general authority for the collection of this information is 35 U.S.C. 2(b)(2); (2) furnishing of the information solicited is voluntary; and (3) the principal purpose for which the information is used by the U.S. Patent and Trademark Office is to process and/or examine your submission related to a patent application or patent. If you do not furnish the requested information, the U.S. Patent and Trademark Office may not be able to process and/or examine your submission, which may result in termination of proceedings or abandonment of the application or expiration of the patent.

The information provided by you in this form will be subject to the following routine uses:

1. The information on this form will be treated confidentially to the extent allowed under the Freedom of Information Act (5 U.S.C. 552) and the Privacy Act (5 U.S.C 552a). Records from this system of records may be disclosed to the Department of Justice to determine whether disclosure of these records is required by the Freedom of Information Act.
2. A record from this system of records may be disclosed, as a routine use, in the course of presenting evidence to a court, magistrate, or administrative tribunal, including disclosures to opposing counsel in the course of settlement negotiations.
3. A record in this system of records may be disclosed, as a routine use, to a Member of Congress submitting a request involving an individual, to whom the record pertains, when the individual has requested assistance from the Member with respect to the subject matter of the record.
4. A record in this system of records may be disclosed, as a routine use, to a contractor of the Agency having need for the information in order to perform a contract. Recipients of information shall be required to comply with the requirements of the Privacy Act of 1974, as amended, pursuant to 5 U.S.C. 552a(m).
5. A record related to an International Application filed under the Patent Cooperation Treaty in this system of records may be disclosed, as a routine use, to the International Bureau of the World Intellectual Property Organization, pursuant to the Patent Cooperation Treaty.
6. A record in this system of records may be disclosed, as a routine use, to another federal agency for purposes of National Security review (35 U.S.C. 181) and for review pursuant to the Atomic Energy Act (42 U.S.C. 218(c)).
7. A record from this system of records may be disclosed, as a routine use, to the Administrator, General Services, or his/her designee, during an inspection of records conducted by GSA as part of that agency's responsibility to recommend improvements in records management practices and programs, under authority of 44 U.S.C. 2904 and 2906. Such disclosure shall be made in accordance with the GSA regulations governing inspection of records for this purpose, and any other relevant (*i.e.*, GSA or Commerce) directive. Such disclosure shall not be used to make determinations about individuals.
8. A record from this system of records may be disclosed, as a routine use, to the public after either publication of the application pursuant to 35 U.S.C. 122(b) or issuance of a patent pursuant to 35 U.S.C. 151. Further, a record may be disclosed, subject to the limitations of 37 CFR 1.14, as a routine use, to the public if the record was filed in an application which became abandoned or in which the proceedings were terminated and which application is referenced by either a published application, an application open to public inspection or an issued patent.
9. A record from this system of records may be disclosed, as a routine use, to a Federal, State, or local law enforcement agency, if the USPTO becomes aware of a violation or potential violation of law or regulation.

UNITED STATES PATENT AND TRADEMARK OFFICE

Commissioner for Patents
United States Patent and Trademark Office
P.O. Box 1450
Alexandria, VA 22313-1450
www.uspto.gov

CERMAK KENEALY & VAIDYA LLP
515 E. BRADDOCK RD
SUITE B
ALEXANDRIA VA 22314

COPY MAILED

AUG 04 2008

In re Application of:
Meise, et al.
Application No. 29/247,425
Filed: June 16, 2006
Attorney Docket No. 028-013

DECISION ON PETITION

This is a decision on the renewed petition under 37 CFR §1.137(b), June 26, 2008, to revive the above-identified application.

The renewed petition is **granted.**

This application became abandoned for failure to respond in a timely manner to the Notice of Allowability mailed April 11, 2007. The notice allowed a statutory period for reply of three-months from its mailing date. No reply was received within the allowable period, and the application became abandoned on July 12, 2007. A Notice of Abandonment was mailed on August 8, 2007.

The drawings were received on September 5, 2007. The terminal disclaimer filed June 26, 2007, is also noted.

The application is being forwarded to the Office of Data Management for further processing.

Telephone inquiries concerning this matter may be directed to the undersigned at (571) 272-3222.

Kenya A. McLaughlin
Petitions Attorney
Office of Petitions

PTO/SB/27 (05-03)
Approved for use through 04/30/2003. OMB 0651-0031
U.S. Patent and Trademark Office; U.S. DEPARTMENT OF COMMERCE
Under the Paperwork Reduction Act of 1995, no persons are required to respond to a collection of information unless it displays a valid OMB control number.

REQUEST FOR EXPEDITED EXAMINATION OF A DESIGN APPLICATION (37 CFR 1.155)

Application Number	TO BE ASSIGNED 29/247,501
Filing Date	June 22, 2006
First Named Inventor	Marni L. Gerber
Title	Portion Of A Shoe Outsole
Atty Docket Number	015127.00725

HAND DELIVER TO THE DESIGN GROUP DIRECTOR'S OFFICE
-or- ADDRESS TO:
MAIL STOP EXPEDITED DESIGN
COMMISSIONER FOR PATENTS
P.O. Box 1450
Alexandria, VA 22313-1450

This is a request for expedited examination of a design application under 37 CFR 1.155.

NOTE: If the Request made by this form accompanies original application papers, include form PTO/SB/18 "Design Patent Application Transmittal" or its equivalent.

A preexamination search was conducted. The field of search was:

Class D2/902, 908, 947, 951, 952, 953, 954, 955, 956, 957, 958, 959, 960.

Related applications:

If not previously filed for the above-identified application, the following items required by 37 CFR 1.155 are enclosed:

Formal drawings (see 37 CFR 1.84).

The fee set forth in 37 CFR 1.17(k).

An information disclosure statement in compliance with 37 CFR 1.98.

7.19.06
Approved
Jacqueline M. Stone
Jacqueline M. Stone, Director
Technology Center 1700/2900

June 22, 2006
Date

/David R. Gerk/
Signature

202-824-3000
Telephone Number

David R. Gerk-Registration No. 56,901
Typed or printed name

WARNING: Information on this form may become public. Credit card information should not be included on this form. Provide credit card information and authorization on PTO-2038.

This collection of information is required by 37 CFR 1.155. The information is required to obtain or retain a benefit by the public which is to file (and by the USPTO to process) an application. Confidentiality is governed by 35 U.S.C. 122 and 37 CFR 1.14. This collection is estimated to take 6 minutes to complete, including gathering, preparing, and submitting the completed application form to the USPTO. Time will vary depending upon the individual case. Any comments on the amount of time you require to complete this form and/or suggestions for reducing this burden, should be sent to the Chief Information Officer, U.S. Patent and Trademark Office, U.S. Department of Commerce, P.O. Box 1450, Alexandria, VA 22313-1450. DO NOT SEND FEES OR COMPLETED FORMS TO THIS ADDRESS. **SEND TO: Mail Stop Expedited Design, Commissioner for Patents, P.O. Box 1450, Alexandria, VA 22313-1450.**

If you need assistance in completing the form, call 1-800-PTO-9199 and select option 2.

UNITED STATES PATENT AND TRADEMARK OFFICE

Commissioner for Patents
United States Patent and Trademark Office
P.O. Box 1450
Alexandria, VA 22313-1450
www.uspto.gov
DW Dec-07

ROBERT M. SCHWARTZ, P.A.
P.O. BOX 221470
HOLLYWOOD FL 33022

COPY MAILED

DEC 0 6 2007

OFFICE OF PETITIONS

In re Application of	:	
Stacy Kaufman	:	
Application Number: 29/247511	:	DECISION ON PETITION
Filing Date: 06/23/2006	:	
Attorney Docket Number: KA 265.011	:	

This is a decision on the petition filed on November 6, 2007, under 37 CFR 1.137(b),[1] to revive the above-identified application.

The petition is **DISMISSED**.

Any request for reconsideration of this decision must be submitted within TWO (2) MONTHS from the mail date of this decision. Extensions of time under 37 CFR 1.136(a) are permitted. The reconsideration request should include a cover letter entitled "Renewed Petition Under 37 CFR 1.137(b)." This is not a final agency decision.

The application became abandoned on October 13, 2007, for failure to timely submit corrected drawings in response to the Notice of

---

[1] Effective December 1, 1997, the provisions of 37 CFR 1.137(b) now provide that where the delay in reply was unintentional, a petition may be filed to revive an abandoned application or a lapsed patent pursuant to 37 CFR 1.137(b). A grantable petition filed under the provisions of 37 CFR 1.137(b) must be accompanied by:

(1) the required reply, unless previously filed. In a nonprovisional application abandoned for failure to prosecute, the required reply may be met by the filing of a continuing application. In a nonprovisional utility or plant application filed on or after June 8, 1995, and abandoned for failure to prosecute, the required reply may also be met by the filing of a request for continuing examination in compliance with § 1.114. In an application or patent, abandoned or lapsed for failure to pay the issue fee or any portion thereof, the required reply must be the payment of the issue fee or any outstanding balance thereof. In an application abandoned for failure to pay the publication fee, the required reply must include payment of the publication fee.

(2) the petition fee as set forth in 37 CFR 1.17(m);

(3) a statement that the entire delay in filing the required reply from the due date for the reply until the filing of a grantable petition pursuant to 37 CFR 1.137(b) was unintentional. The Commissioner may required additional information where there is a question whether the delay was unintentional; and

(4) any terminal disclaimer (and fee as set forth in 37 CFR 1.20(d)) required pursuant to 37 CFR 1.137(c)).

Allowability For A Design Application mailed on July 12, 2007, which set a three (3) month statutory period for reply. Notice of Abandonment was mailed on November 6, 2007.

The petition lacks a terminal disclaimer and fee as required by 37 CFR 1.137(c), which states that any petition to revive pursuant to this section in a design application must be accompanied by a terminal disclaimer and fee as set forth in § 1.321 dedicating to the public a terminal part of the term of any patent granted thereon equivalent to the period of abandonment of the application.

A copy of the terminal disclaimer form is enclosed for petitioner's use.

Receipt of the four (4) sheets of drawings filed with the petition is acknowledged.

Further correspondence with respect to this matter should be addressed as follows:

By mail: Mail Stop Petition
Commissioner for Patents
P.O. Box 1450
Alexandria, VA 22313-1450

By FAX: (571) 273-8300
Attn: Office of Petitions

By hand: Customer Service Window
Mail Stop Petition
Randolph Building
401 Dulany Street
Alexandria, VA 22314

Telephone inquiries concerning this matter may be directed to the undersigned at (571)272-3231.

D Wood

Douglas I. Wood
Senior Petitions Attorney
Office of Petitions

Encl: PTO/SB/63

PTO/SB/63 (12-07)
Approved for use through 12/31/2007. OMB 0651-0031
U.S. Patent and Trademark Office; U.S. DEPARTMENT OF COMMERCE
Under the Paperwork Reduction Act of 1995, no persons are required to a collection of information unless it displays a valid OMB control number.

TERMINAL DISCLAIMER TO ACCOMPANY PETITION	Docket Number (Optional)

In re Application of:

Name:

Application Number:

Filed:

For:

The owner*, _____ of _____ percent interest in the above-identified application hereby disclaims a terminal part of the term of any patent granted the above-identified application equivalent to: (1) if the above-identified application is a design application, the period of abandonment of the above-identified application, and (2) if the above-identified application is a utility or plant application, the lesser of: (a) the period of abandonment of the application; or (b) the period extending beyond twenty years from the date on which the above-identified application was filed in the United States or, if the application contains a specific reference to an earlier filed application(s) under 35 U.S.C. 120, 121, or 365(c), from the date on which the earliest such application was filed. This disclaimer also applies to any patent granted on a utility or plant application filed before June 8, 1995, or a design application, that contains a specific reference under 35 U.S.C. 120, 121, or 365(c) to the above-identified application. This disclaimer is binding upon the grantee, and its successors or assigns.

Check either box 1 or 2 below, if appropriate.

1. ☐ For submissions on behalf of an organization (e.g., corporation, partnership, university, government agency, etc.), the undersigned is empowered to act on behalf of the organization.
2. ☐ The undersigned is an attorney or agent of record. Registration Number_____.

_____	_____
Signature	Date
_____	_____
Typed or Printed Name	Telephone Number

☐ Terminal disclaimer fee under 37 CFR 1.20(d) included.

WARNING: Information on this form may become public. Credit card information should not be included on this form. Provide credit card information and authorization on PTO-2038.

* Statement under 37 CFR 3.73(b) is required if terminal disclaimer is signed by the assignee (owner). Form PTO/SB/96 may be used for making this certification. See MPEP § 324.

This collection of information is required by 37 CFR 1.137. The information is required to obtain or retain a benefit by the public which is to file (and by the USPTO to process) an application. Confidentiality is governed by 35 U.S.C. 122 and 37 CFR 1.11 and 1.14. This collection is estimated to take 12 minutes to complete, including gathering, preparing, and submitting the completed application form to the USPTO. Time will vary depending upon the individual case. Any comments on the amount of time you require to complete this form and/or suggestions for reducing this burden, should be sent to the Chief Information Officer, U.S. Patent and Trademark Office, U.S. Department of Commerce, P.O. Box 1450, Alexandria, VA 22313-1450. DO NOT SEND FEES OR COMPLETED FORMS TO THIS ADDRESS. **SEND TO: Commissioner for Patents, P.O. Box 1450, Alexandria, VA 22313-1450.**

If you need assistance in completing the form, call 1-800-PTO-9199 and select option 2.

Privacy Act Statement

The **Privacy Act of 1974 (P.L. 93-579)** requires that you be given certain information in connection with your submission of the attached form related to a patent application or patent. Accordingly, pursuant to the requirements of the Act, please be advised that: (1) the general authority for the collection of this information is 35 U.S.C. 2(b)(2); (2) furnishing of the information solicited is voluntary; and (3) the principal purpose for which the information is used by the U.S. Patent and Trademark Office is to process and/or examine your submission related to a patent application or patent. If you do not furnish the requested information, the U.S. Patent and Trademark Office may not be able to process and/or examine your submission, which may result in termination of proceedings or abandonment of the application or expiration of the patent.

The information provided by you in this form will be subject to the following routine uses:

1. The information on this form will be treated confidentially to the extent allowed under the Freedom of Information Act (5 U.S.C. 552) and the Privacy Act (5 U.S.C 552a). Records from this system of records may be disclosed to the Department of Justice to determine whether disclosure of these records is required by the Freedom of Information Act.
2. A record from this system of records may be disclosed, as a routine use, in the course of presenting evidence to a court, magistrate, or administrative tribunal, including disclosures to opposing counsel in the course of settlement negotiations.
3. A record in this system of records may be disclosed, as a routine use, to a Member of Congress submitting a request involving an individual, to whom the record pertains, when the individual has requested assistance from the Member with respect to the subject matter of the record.
4. A record in this system of records may be disclosed, as a routine use, to a contractor of the Agency having need for the information in order to perform a contract. Recipients of information shall be required to comply with the requirements of the Privacy Act of 1974, as amended, pursuant to 5 U.S.C. 552a(m).
5. A record related to an International Application filed under the Patent Cooperation Treaty in this system of records may be disclosed, as a routine use, to the International Bureau of the World Intellectual Property Organization, pursuant to the Patent Cooperation Treaty.
6. A record in this system of records may be disclosed, as a routine use, to another federal agency for purposes of National Security review (35 U.S.C. 181) and for review pursuant to the Atomic Energy Act (42 U.S.C. 218(c)).
7. A record from this system of records may be disclosed, as a routine use, to the Administrator, General Services, or his/her designee, during an inspection of records conducted by GSA as part of that agency's responsibility to recommend improvements in records management practices and programs, under authority of 44 U.S.C. 2904 and 2906. Such disclosure shall be made in accordance with the GSA regulations governing inspection of records for this purpose, and any other relevant (*i.e.*, GSA or Commerce) directive. Such disclosure shall not be used to make determinations about individuals.
8. A record from this system of records may be disclosed, as a routine use, to the public after either publication of the application pursuant to 35 U.S.C. 122(b) or issuance of a patent pursuant to 35 U.S.C. 151. Further, a record may be disclosed, subject to the limitations of 37 CFR 1.14, as a routine use, to the public if the record was filed in an application which became abandoned or in which the proceedings were terminated and which application is referenced by either a published application, an application open to public inspection or an issued patent.
9. A record from this system of records may be disclosed, as a routine use, to a Federal, State, or local law enforcement agency, if the USPTO becomes aware of a violation or potential violation of law or regulation.

UNITED STATES PATENT AND TRADEMARK OFFICE

Commissioner for Patents
United States Patent and Trademark Office
P.O. Box 1450
Alexandria, VA 22313-1450
www.uspto.gov
DIW Jan-08

ROBERT M. SCHWARTZ, P.A.
P.O. BOX 221470
HOLLYWOOD FL 33022

COPY MAILED

JAN 17 2008

OFFICE OF PETITIONS

In re Application of :
Stacy Kaufman :
Application Number: 29/247511 : DECISION ON PETITION
Filing Date: 06/23/2006 :
Attorney Docket Number: KA :
265.011 :

This is a decision on the renewed petition filed on December 11, 2007, under 37 CFR 1.137(b),[1] to revive the above-identified application.

The petition is **GRANTED**.

The application became abandoned on October 13, 2007, for failure to timely submit corrected drawings in response to the Notice of Allowability For A Design Application mailed on July 12, 2007, which set a three (3) month statutory period for reply. Notice of Abandonment was mailed on November 6, 2007. The petition filed on November 6, 2007, was dismissed on December 6, 2007.

Receipt of the amendment after notice of allowance including the drawings is acknowledged.

---

[1] Effective December 1, 1997, the provisions of 37 CFR 1.137(b) now provide that where the delay in reply was unintentional, a petition may be filed to revive an abandoned application or a lapsed patent pursuant to 37 CFR 1.137(b). A grantable petition filed under the provisions of 37 CFR 1.137(b) must be accompanied by:

(1) the required reply, unless previously filed. In a nonprovisional application abandoned for failure to prosecute, the required reply may be met by the filing of a continuing application. In a nonprovisional utility or plant application filed on or after June 8, 1995, and abandoned for failure to prosecute, the required reply may also be met by the filing of a request for continuing examination in compliance with § 1.114. In an application or patent, abandoned or lapsed for failure to pay the issue fee or any portion thereof, the required reply must be the payment of the issue fee or any outstanding balance thereof. In an application abandoned for failure to pay the publication fee, the required reply must include payment of the publication fee.

(2) the petition fee as set forth in 37 CFR 1.17(m);

(3) a statement that the entire delay in filing the required reply from the due date for the reply until the filing of a grantable petition pursuant to 37 CFR 1.137(b) was unintentional. The Commissioner may required additional information where there is a question whether the delay was unintentional; and

(4) any terminal disclaimer (and fee as set forth in 37 CFR 1.20(d)) required pursuant to 37 CFR 1.137(c)).

The terminal disclaimer is accepted and has been made of record. Any continuing application filed from this application must contain a copy of the terminal disclaimer. The copy of the terminal disclaimer must be filed with a cover letter requesting the terminal disclaimer be recorded on the continuing application. A copy of this decision should be attached to the cover letter.

The application is referred to Technology Center 2916 for further processing.

Telephone inquiries concerning this matter may be directed to the undersigned at (571)272-3231.

Douglas I. Wood
Senior Petitions Attorney
Office of Petitions

PTO/SB/27 (05-03)
Approved for use through 04/30/2003. OMB 0651-0031
U.S. Patent and Trademark Office; U.S. DEPARTMENT OF COMMERCE
Under the Paperwork Reduction Act of 1995, no persons are required to respond to a collection of information unless it displays a valid OMB control number.

REQUEST FOR EXPEDITED EXAMINATION OF A DESIGN APPLICATION (37 CFR 1.155)

Application Number	TBD 29/247 541
Filing Date	June 26, 2006
First Named Inventor	David Joseph Dirsa
Title	Portion Of A Shoe Upper
Atty Docket Number	015127.00739

HAND DELIVER TO THE DESIGN GROUP DIRECTOR'S OFFICE
-or- ADDRESS TO:
MAIL STOP EXPEDITED DESIGN
COMMISSIONER FOR PATENTS
P.O. Box 1450
Alexandria, VA 22313-1450

This is a request for expedited examination of a design application under 37 CFR 1.155.

NOTE: If the Request made by this form accompanies original application papers, include form PTO/SB/18 "Design Patent Application Transmittal" or its equivalent.

A preexamination search was conducted. The field of search was:

D2/896, 902, 907, 908, 910, 911, 943, 944, 945, 946, 969, 972, 973 and 974

Related applications: _____

If not previously filed for the above-identified application, the following items required by 37 CFR 1.155 are enclosed:

Formal drawings (see 37 CFR 1.84).

The fee set forth in 37 CFR 1.17(k).

An information disclosure statement in compliance with 37 CFR 1.98.

8-4-06
Approved
Jacqueline M. Stone
Jacqueline M. Stone, Director
Technology Center 1700/2900

6/26/06
Date

/Anthony W. Kandare/
Signature

202-824-3000
Telephone Number

Anthony W. Kandare, Reg. No. 48,830
Typed or printed name

WARNING: Information on this form may become public. Credit card information should not be included on this form. Provide credit card information and authorization on PTO-2038.

This collection of information is required by 37 CFR 1.155. The information is required to obtain or retain a benefit by the public which is to file (and by the USPTO to process) an application. Confidentiality is governed by 35 U.S.C. 122 and 37 CFR 1.14. This collection is estimated to take 6 minutes to complete, including gathering, preparing, and submitting the completed application form to the USPTO. Time will vary depending upon the individual case. Any comments on the amount of time you require to complete this form and/or suggestions for reducing this burden, should be sent to the Chief Information Officer, U.S. Patent and Trademark Office, U.S. Department of Commerce, P.O. Box 1450, Alexandria, VA 22313-1450. DO NOT SEND FEES OR COMPLETED FORMS TO THIS ADDRESS. **SEND TO: Mail Stop Expedited Design, Commissioner for Patents, P.O. Box 1450, Alexandria, VA 22313-1450.**

If you need assistance in completing the form, call 1-800-PTO-9199 and select option 2.

PTO/SB/27 (05-03)
Approved for use through 04/30/2003. OMB 0651-0031
U.S. Patent and Trademark Office; U.S. DEPARTMENT OF COMMERCE
Under the Paperwork Reduction Act of 1995, no persons are required to respond to a collection of information unless it displays a valid OMB control number.

REQUEST FOR EXPEDITED EXAMINATION OF A DESIGN APPLICATION (37 CFR 1.155)

Application Number	TBD 29/247 542
Filing Date	June 26, 2006
First Named Inventor	Leonard Wozniak
Title	Portion Of A Shoe Upper
Atty Docket Number	015127.00740

HAND DELIVER TO THE DESIGN GROUP DIRECTOR'S OFFICE
-or- ADDRESS TO:
MAIL STOP EXPEDITED DESIGN
COMMISSIONER FOR PATENTS
P.O. Box 1450
Alexandria, VA 22313-1450

This is a request for expedited examination of a design application under 37 CFR 1.155.

NOTE: If the Request made by this form accompanies original application papers, include form PTO/SB/18 "Design Patent Application Transmittal" or its equivalent.

A preexamination search was conducted. The field of search was:

D2/896, 902, 907, 908, 943, 944, 945, 946, 969, 972, 973 and 974

Related applications: _____

If not previously filed for the above-identified application, the following items required by 37 CFR 1.155 are enclosed:

Formal drawings (see 37 CFR 1.84).

The fee set forth in 37 CFR 1.17(k).

An information disclosure statement in compliance with 37 CFR 1.98.

8-4-06
Approved
Jacqueline M. Stone
Jacqueline M. Stone, Director
Technology Center 1700/2900

6/26/06
Date

/Anthony W. Kandare/
Signature

202-824-3000
Telephone Number

Anthony W. Kandare, Reg. No. 48,830
Typed or printed name

WARNING: Information on this form may become public. Credit card information should not be included on this form. Provide credit card information and authorization on PTO-2038.

This collection of information is required by 37 CFR 1.155. The information is required to obtain or retain a benefit by the public which is to file (and by the USPTO to process) an application. Confidentiality is governed by 35 U.S.C. 122 and 37 CFR 1.14. This collection is estimated to take 6 minutes to complete, including gathering, preparing, and submitting the completed application form to the USPTO. Time will vary depending upon the individual case. Any comments on the amount of time you require to complete this form and/or suggestions for reducing this burden, should be sent to the Chief Information Officer, U.S. Patent and Trademark Office, U.S. Department of Commerce, P.O. Box 1450, Alexandria, VA 22313-1450. DO NOT SEND FEES OR COMPLETED FORMS TO THIS ADDRESS. **SEND TO: Mail Stop Expedited Design, Commissioner for Patents, P.O. Box 1450, Alexandria, VA 22313-1450.**

If you need assistance in completing the form, call 1-800-PTO-9199 and select option 2.

UNITED STATES PATENT AND TRADEMARK OFFICE

Commissioner for Patents
United States Patent and Trademark Office
P.O. Box 1450
Alexandria, VA 22313-1450
www.uspto.gov

DAVIS WRIGHT TREMAINE, LLP/Seattle
1201 Third Avenue, Suite 2200
SEATTLE, WA 98101-3045

COPY MAILED

JUL 0 2 2008

OFFICE OF PETITIONS

In re Application of :
Grant L. Reuter :
Application No. 29/247,589 : ON PETITION
Filed: June 27, 2006 :
Attorney Docket No. 45618-5 :

This is a decision on the petition under 37 CFR 1.137(b), filed on February 15, 2007, to revive the above-identified application.

The petition is **dismissed**.

A grantable petition under 37 CFR 1.137(b) must be accompanied by: (1) the required reply, unless previously filed; (2) the petition fee as set forth in 37 CFR 1.17(m); (3) a statement that the entire delay in filing the required reply from the due date for the reply until the filing of a grantable petition pursuant to 37 CFR 1.137(b) was unintentional; and (4) any terminal disclaimer (and fee as set forth in 37 CFR 1.20(d)) required by 37 CFR 1.137(d). Where there is a question as to whether either the abandonment or the delay in filing a petition under 37 CFR 1.137 was unintentional, the Commissioner may require additional information. See MPEP 711.03(c)(II)(C) and (D). The instant petition lacks item(s) (4).

There is no indication that the person signing the instant petition was ever given a power of attorney or authorization of agent to prosecute the above-identified application. However, in accordance with 37 CFR 1.34(a), the signature of Brian L. Johnson appearing on the petition shall constitute a representation to the United States Patent and Trademark Office that he is authorized to represent the particular party in whose behalf he acts. Therefore, the petition and statement of unintentional delay are accepted.

On the other hand, a review of the record reveals that the terminal disclaimer under 37 CFR 1.137(d), filed February 15, 2007 was not signed by an attorney or agent of record.

37 CFR 1.321(b) states:

> An applicant or assignee may disclaim or dedicate to the public the entire term, or any terminal part of the term, of a patent to be granted. Such terminal disclaimer is binding upon the grantee and its successors or assigns. The terminal disclaimer, to be recorded in the Patent and Trademark Office, must:
>
> (1) Be signed:
> (i) By the applicant, or
> (ii) If there is an assignee of record of an undivided part interest, by the applicant and such assignee, or
> (iii) If there is an assignee of record of the entire interest, by such assignee, or
> (iv) By an attorney or agent of record;
> (2) Specify the portion of the term of the patent being disclaimed;
> (3) State the present extent of applicant's or assignee's ownership interest in the patent to be granted; and

(4) Be accompanied by the fee set forth in §1.20(d).

Additionally, the terminal disclaimer sets forth the owner as Dry Air Technology of 100 percent interest in the above-identified application. However, the Office has no recorded assignment showing that the original owner (Grant L. Reuter) assigned his entire, right title and interest to Dry Air Technology. Therefore, in order to accept the terminal disclaimer filed on February 15, 2007, an appropriate power of attorney or authorization of agent must be submitted along with any assignment documents and $40 recordation fee, showing that Dry Air Technology is the owner of 100 percent interest[1].

A courtesy copy of this decision is being mailed to petitioner. Nevertheless, all future correspondence will be mailed solely to the address of record.

Any request for reconsideration of this decision must be submitted within **TWO (2) MONTHS** from the mail date of this decision. Extensions of time under 37 CFR 1.136(a) are permitted. The reconsideration request should include a cover letter entitled "Renewed Petition under 37 CFR 1.137(b)." This is **not** a final agency action within the meaning of 5 U.S.C. § 704.

Further correspondence with respect to this matter should be addressed as follows:

By mail:
Mail Stop PETITION
Commissioner for Patents
P. O. Box 1450
Alexandria, VA 22313-1450

By hand:
U. S. Patent and Trademark Office
Customer Service Window, Mail Stop Petitions
Randolph Building
401 Dulany Street
Alexandria, VA 22314

The centralized facsimile number is **(571) 273-8300.**

Any questions concerning this decision should be directed to the undersigned at (571) 272-3226.

Andrea Smith
Petitions Examiner
Office of Petitions

cc: Brian L. Johnson
1501 Fourth Avenue, Ste. 2600
Seattle, WA 98101-1688

[1] Pursuant to 37 CFR 3.11, the assignment documents must be submitted for recordation.

UNITED STATES PATENT AND TRADEMARK OFFICE

Commissioner for Patents
United States Patent and Trademark Office
P.O. Box 1450
Alexandria, VA 22313-1450
www.uspto.gov

DAVIS WRIGHT TREMAINE, LLP/Seattle
1201 Third Avenue, Suite 2200
SEATTLE, WA 98101-3045

COPY MAILED
DEC 2 4 2008

In re Application of :
Grant L. Reuter :
Application No. 29/247,589 : ON PETITION
Filed: June 27, 2006 :
Attorney Docket No. 45618-5 :

This is a decision on the renewed petition under 37 CFR 1.137(b), filed on October 28, 2008, to revive the above-identified application.

The renewed petition satisfies the requirements of 37 CFR 1.137(b) in that petitioner has supplied (1) the reply in the form of an executed oath/declaration, the late filing surcharge of $65, the design filing fee of $100, the search fee of $50, the examination fee of $65, and a terminal disclaimer with the $65 fee; (2) the petition fee of $750; and (3) a proper statement of unintentional delay. Therefore, the petition is **GRANTED**.

The terminal disclaimer under 37 CFR 1.137(d), filed October 28, 2008, has been accepted and made of record. Any continuing application filed from this application must contain a copy of the terminal disclaimer. The copy of the terminal disclaimer must be filed with a cover letter requesting the terminal disclaimer be recorded on the continuing application. A copy of this decision should be attached to the cover letter.

Since a $65 terminal disclaimer fee was previously paid on February 15, 2007, the Office is refunding the $70 terminal disclaimer fee filed on October 28, 2008 as a duplicate payment. Additionally, since an extension of time must be filed prior to the maximum extendable period for reply, the $1,080 extension of time fee filed on February 14, 2007 is unnecessary. Therefore, fees totaling $1150 will be refunded to petitioner's deposit account.

The Power of Attorney and Correspondence Address Indication Form has been accepted and made of record. A Notice of Acceptance accompanies this decision.

This application file is being referred to the Office of Patent Application Processing for further processing.

Telephone inquiries concerning this decision should be directed to the undersigned at (571) 272-3226.

Andrea Smith
Petitions Examiner
Office of Petitions

Enclosure: Notification of Acceptance of Power of Attorney

UNITED STATES PATENT AND TRADEMARK OFFICE

UNITED STATES DEPARTMENT OF COMMERCE
United States Patent and Trademark Office
Address: COMMISSIONER FOR PATENTS
P.O. Box 1450
Alexandria, Virginia 22313-1450
www.uspto.gov

APPLICATION NUMBER	FILING OR 371(C) DATE	FIRST NAMED APPLICANT	ATTY. DOCKET NO./TITLE
29/247,589	06/27/2006	Grant L. Reuter	45618-5

CONFIRMATION NO. 1679

POA ACCEPTANCE LETTER

22504
DAVIS WRIGHT TREMAINE, LLP/Seattle
1201 Third Avenue, Suite 2200
SEATTLE, WA 98101-3045

OC000000033543940

Date Mailed: 12/10/2008

NOTICE OF ACCEPTANCE OF POWER OF ATTORNEY

This is in response to the Power of Attorney filed 10/28/2008.

The Power of Attorney in this application is accepted. Correspondence in this application will be mailed to the above address as provided by 37 CFR 1.33.

/amsmith/

Office of Data Management, Application Assistance Unit (571) 272-4000, or (571) 272-4200, or 1-888-786-0101

UNITED STATES PATENT AND TRADEMARK OFFICE

Commissioner for Patents
United States Patent and Trademark Office
P.O. Box 1450
Alexandria, VA 22313-1450
www.uspto.gov

CHARLES J. PRESCOTT, P.A.
SUITE 115
2033 WOOD STREET
SARASOTA FL 34237

COPY MAILED

JUN 0 8 2007

OFFICE OF PETITIONS

In re Application of
Sifrit
Application No. 29/247,607
Filed: June 28, 2006
Title of Invention: Goal Cover

ON PETITION

This is a decision on the petition filed April 30, 2007, under 37 CFR 1.137(b) to revive the above-identified application.

This application became abandoned for failure to timely submit the issue and publication fees, as required by the Notice of Allowance and Fee (s) Due and submit corrected drawings, as required by the Notice of Allowability both of which were mailed October 31, 2006. The Notice of Allowance and Fee (s) Due and the Notice of Allowability set a three (3) month statutory period for reply. Extensions of time were not available under the provisions of 37 CFR 1.136(a). Accordingly, this application became abandoned on February 1, 2007. A Notice of Abandonment was mailed on March 21, 2007.

A grantable petition under 37 CFR 1.137(b) must be accompanied by: (1) the required reply, unless previously filed; (2) the petition fee as set forth in 37 CFR 1.17(m); (3) a statement that "the entire delay in filing the required reply from the due date for the reply until the filing of a grantable petition pursuant to 37 CFR 1.137(b) was unintentional"; and (4) any terminal disclaimer (and fee as set forth in 37 CFR 1.20(d)) required by 37 CFR 1.137(c). Where there is a question as to whether either the abandonment or the delay in filing a petition under 37 CFR 1.137 was unintentional, the Director may require additional information. See MPEP 711.03 (c)(III)(c) and (D).

As to item (1), petitioner has failed to provide corrected drawings as required by the Notice of Allowability .

Further correspondence with respect to this matter should be addressed as follows:

By mail:	Mail Stop Petition Commissioner for Patents P.O. Box 1450 Alexandria, VA 22313-1450
By facsimile:	(571) 273-8300
By delivery service: (FedEx, UPS, DHL, etc.)	U.S. Patent and Trademark Office Customer Service Window, Randolph Building 401 Dulany Street Alexandria, VA 22314

Telephone inquiries should be directed to the undersigned at (571) 272-3215.

Charlema R. Grant

Charlema R. Grant
Petitions Attorney
Office of Petitions

UNITED STATES PATENT AND TRADEMARK OFFICE

Commissioner for Patents
United States Patent and Trademark Office
P.O. Box 1450
Alexandria, VA 22313-1450
www.uspto.gov

CHARLES J. PRESCOTT, P.A.
SUITE 115
2033 WOOD STREET
SARASOTA FL 34237

COPY MAILED

JUN 14 2007

OFFICE OF PETITIONS

In re Application of
Sifrit
Application No. 29/247,607
Filed: June 28, 2006
Title of Invention: Goal Cover

CORRECTED DECISION
ON PETITION

This is a decision on the petition filed April 30, 2007, under 37 CFR 1.137(b) to revive the above-identified application. This decision corrects the decision mailed on June 8, 2007.

This petition is hereby **Dismissed**.

Any request for reconsideration must be submitted within TWO (2) MONTHS from the mail date of this decision. Extensions of time under 37 CFR 1.136(a) are permitted. The reconsideration request should include a cover letter entitled "Renewed Petition under 37 CFR 1.137(b)." This is not final agency action within the meaning of 5 U.S.C. §704.

This application became abandoned for failure to timely submit the issue and publication fees, as required by the Notice of Allowance and Fee (s) Due and submit corrected drawings, as required by the Notice of Allowability both of which were mailed October 31, 2006. The Notice of Allowance and Fee (s) Due and the Notice of Allowability set a three (3) month statutory period for reply. Extensions of time were not available under the provisions of 37 CFR 1.136(a). Accordingly, this application

became abandoned on February 1, 2007. A Notice of Abandonment was mailed on March 21, 2007.

A grantable petition under 37 CFR 1.137(b) must be accompanied by: (1) the required reply, unless previously filed; (2) the petition fee as set forth in 37 CFR 1.17(m); (3) a statement that "the entire delay in filing the required reply from the due date for the reply until the filing of a grantable petition pursuant to 37 CFR 1.137(b) was unintentional"; and (4) any terminal disclaimer (and fee as set forth in 37 CFR 1.20(d)) required by 37 CFR 1.137(c). Where there is a question as to whether either the abandonment or the delay in filing a petition under 37 CFR 1.137 was unintentional, the Director may require additional information. See MPEP 711.03 (c)(III)(c) and (D).

As to item (1), petitioner has failed to provide corrected drawings as required by the Notice of Allowability .

Further correspondence with respect to this matter should be addressed as follows:

By mail:	Mail Stop Petition Commissioner for Patents P.O. Box 1450 Alexandria, VA 22313-1450
By facsimile:	(571) 273-8300
By delivery service: (FedEx, UPS, DHL, etc.)	U.S. Patent and Trademark Office Customer Service Window, Randolph Building 401 Dulany Street Alexandria, VA 22314

Telephone inquiries should be directed to the undersigned at (571) 272-3215.

Charlema R. Grant

Petitions Attorney

Office of Petitions

UNITED STATES PATENT AND TRADEMARK OFFICE

Commissioner for Patents
United States Patent and Trademark Office
P.O. Box 1450
Alexandria, VA 22313-1450
www.uspto.gov

CHARLES J. PRESCOTT, P.A.
SUITE 115
2033 WOOD STREET
SARASOTA FL 34237

COPY MAILED

DEC 18 2007

OFFICE OF PETITIONS

In re Application of :
Robert Sifrit :
Application No. 29/247,607 : DECISION ON PETITION
Filed: June 28, 2006 :
Title: Goal Cover :

This is a decision on the renewed petition under 37 CFR 1.137(b), filed July 31, 2007, to revive the above-identified design application.

The petition is **GRANTED**.

The application became abandoned for failure to timely pay the issue fee and submit corrected drawings on or before January 31, 2007, as required by the Notice of Allowance and Fee(s) Due and Notice of Allowability, mailed October 31, 2006, which set a statutory period for reply of three (3) months. Accordingly, the application became abandoned on February 1, 2007. A Notice of Abandonment was mailed on March 21, 2007.

The petition satisfies the requirements of 37 CFR 1.137(b) in that petitioner has supplied (1) the reply in the form of the $400 issue fee, (2) the petition fee of $750, (3) a proper statement of unintentional delay, and (4) a terminal disclaimer and fee as required by 37 CFR 1.137(d). Accordingly, the failure to timely pay the issue fee and submit corrected drawings is accepted as being unintentionally delayed.

The terminal disclaimer is accepted and has been made of record. Any continuing application filed from this application must contain a copy of the terminal disclaimer. The copy of the terminal disclaimer must be filed with a cover letter requesting the terminal disclaimer be recorded on the continuing application. A copy of this decision should be attached to the cover letter.

Telephone inquiries concerning this decision should be directed to the undersigned at (571) 272-3215.

This application is being referred to Publishing Division for further processing in accordance with this decision on petition.

Charlema Grant
Petitions Attorney
Office of Petitions

PTO/SB/27 (05-03)
Approved for use through 04/30/2003. OMB 0651-0031
U.S. Patent and Trademark Office; U.S. DEPARTMENT OF COMMERCE
Under the Paperwork Reduction Act of 1995, no persons are required to respond to a collection of information unless it displays a valid OMB control number.

REQUEST FOR EXPEDITED EXAMINATION OF A DESIGN APPLICATION (37 CFR 1.155)

Application Number	TBD 29/247,624
Filing Date	Herewith
First Named Inventor	Andrew Caine
Title	Portion Of A Shoe Upper
Atty Docket Number	015127.00755

HAND DELIVER TO THE DESIGN GROUP DIRECTOR'S OFFICE
-or- ADDRESS TO:
MAIL STOP EXPEDITED DESIGN
COMMISSIONER FOR PATENTS
P.O. Box 1450
Alexandria, VA 22313-1450

This is a request for expedited examination of a design application under 37 CFR 1.155.

NOTE: If the Request made by this form accompanies original application papers, include form PTO/SB/18 "Design Patent Application Transmittal" or its equivalent.

A preexamination search was conducted. The field of search was:

D2/896, 902, 907, 908, 910, 911, 943, 944, 945, 946, 969, 972, 973 and 974

Related applications: _____

If not previously filed for the above-identified application, the following items required by 37 CFR 1.155 are enclosed:

Formal drawings (see 37 CFR 1.84).

The fee set forth in 37 CFR 1.17(k).

An information disclosure statement in compliance with 37 CFR 1.98.

7-18-06
Approved: Jacqueline M. Stone
Jacqueline M. Stone, Director
Technology Center 1700/2900

June , 2006
Date

/Darrell G. Mottley/
Signature

202-824-3000
Telephone Number

Darrell G .Mottley, 42,912
Typed or printed name

WARNING: Information on this form may become public. Credit card information should not be included on this form. Provide credit card information and authorization on PTO-2038.

This collection of information is required by 37 CFR 1.155. The information is required to obtain or retain a benefit by the public which is to file (and by the USPTO to process) an application. Confidentiality is governed by 35 U.S.C. 122 and 37 CFR 1.14. This collection is estimated to take 6 minutes to complete, including gathering, preparing, and submitting the completed application form to the USPTO. Time will vary depending upon the individual case. Any comments on the amount of time you require to complete this form and/or suggestions for reducing this burden, should be sent to the Chief Information Officer, U.S. Patent and Trademark Office, U.S. Department of Commerce, P.O. Box 1450, Alexandria, VA 22313-1450. DO NOT SEND FEES OR COMPLETED FORMS TO THIS ADDRESS. **SEND TO: Mail Stop Expedited Design, Commissioner for Patents, P.O. Box 1450, Alexandria, VA 22313-1450.**

If you need assistance in completing the form, call 1-800-PTO-9199 and select option 2.

IN THE UNITED STATES PATENT AND TRADEMARK OFFICE

In Re the Application of:	)	Group Art Unit: 2913
	)	
Valentinsson	)	Examiner:
	)	
Serial No.: 29/247,663	)	Confirmation No.: 3427
	)	
Filed: June 30, 2006	)	REQUEST FOR EXPEDITED
	)	EXAMINATION OF A
Atty. File No.: 2584SAS-1	)	DESIGN APPLICATION
	)	
For: TRANSPORT PALLET	)	

Filed Electronically

Approved 11-27-06
Jacqueline M. Stone
Jacqueline M. Stone, Director
Technology Center 1700

Mail Stop Expedited Designs
Commissioner for Patents
P.O. Box 1450
Alexandria, VA 22313

Dear Sir:

The Applicant of the above-identified patent application respectfully requests expedited examination pursuant to 37 CFR §1.155. The application as filed includes the formal drawings in compliance with 37 CFR §1.84. The Applicant has conducted a pre-examination search in Class 108 (subclasses 51.11, 521, 53.1, 53.3, 54.1, 55.3, 56.1, 57.1, 901 and 902), D34 (subclass 38), 206 (subclasses 386 and 600), D5 (subclass D5), 248 (subclasses 346.06, 346.1 and 346.01), 220 (subclasses 1.5, 4.16, 4.26, 4.27, 4.28, 7, 254.3 and 254.1) and International Class B65D. Enclosed herewith is an Information Disclosure Statement listing the prior art uncovered in said search. The $900.00 fee set forth in 37 CFR §1.17(k) is being submitted electronically. The Applicant has authorized to debit or credit Deposit Account No. 19-1970 as necessary. If there are any questions regarding any of the foregoing, the Examiner is invited to contact the undersigned.

Respectfully submitted,

SHERIDAN ROSS P.C.

By: C. W. Mueller

Craig W. Mueller
Registration No. 52,055
1560 Broadway, Suite 1200
Denver, Colorado 80202-5141
(303) 863-9700

Date: 11-6-06

PTO/SB/27 (05-03)
Approved for use through 04/30/2003. OMB 0651-0031
U.S. Patent and Trademark Office; U.S. DEPARTMENT OF COMMERCE
Under the Paperwork Reduction Act of 1995, no persons are required to respond to a collection of information unless it displays a valid OMB control number.

REQUEST FOR EXPEDITED EXAMINATION OF A DESIGN APPLICATION (37 CFR 1.155)

Application Number	TO BE ASSIGNED 29/247,667
Filing Date	June 30, 2006
First Named Inventor	Kenneth Link
Title	Portion Of A Shoe Sole
Atty Docket Number	015127.00727

HAND DELIVER TO THE DESIGN GROUP DIRECTOR'S OFFICE
-or- ADDRESS TO:
MAIL STOP EXPEDITED DESIGN
COMMISSIONER FOR PATENTS
P.O. Box 1450
Alexandria, VA 22313-1450

This is a request for expedited examination of a design application under 37 CFR 1.155.

NOTE: If the Request made by this form accompanies original application papers, include form PTO/SB/18 "Design Patent Application Transmittal" or its equivalent.

A preexamination search was conducted. The field of search was:

Class D2/896, 902, 907, 908, 947, 948, 949, 951, 952, 953, 954, 955, 956, 957, 958, 959 and 960.

Related applications:

If not previously filed for the above-identified application, the following items required by 37 CFR 1.155 are enclosed:

Formal drawings (see 37 CFR 1.84).

The fee set forth in 37 CFR 1.17(k).

An information disclosure statement in compliance with 37 CFR 1.98.

7-18-06
Approved
Jacqueline M. Stone
Jacqueline M. Stone, Director
Technology Center 1700/2900

June 30, 2006
Date

/Darrell G. Mottley/
Signature

202-824-3000
Telephone Number

Darrell G. Mottley, Reg. No. 42,912
Typed or printed name

WARNING: Information on this form may become public. Credit card information should not be included on this form. Provide credit card information and authorization on PTO-2038.

This collection of information is required by 37 CFR 1.155. The information is required to obtain or retain a benefit by the public which is to file (and by the USPTO to process) an application. Confidentiality is governed by 35 U.S.C. 122 and 37 CFR 1.14. This collection is estimated to take 6 minutes to complete, including gathering, preparing, and submitting the completed application form to the USPTO. Time will vary depending upon the individual case. Any comments on the amount of time you require to complete this form and/or suggestions for reducing this burden, should be sent to the Chief Information Officer, U.S. Patent and Trademark Office, U.S. Department of Commerce, P.O. Box 1450, Alexandria, VA 22313-1450. DO NOT SEND FEES OR COMPLETED FORMS TO THIS ADDRESS. **SEND TO: Mail Stop Expedited Design, Commissioner for Patents, P.O. Box 1450, Alexandria, VA 22313-1450.**

If you need assistance in completing the form, call 1-800-PTO-9199 and select option 2.

29/247,676

PTO/SB/27 (05-03)
Approved for use through 04/30/2003. OMB 0651-0031
U.S. Patent and Trademark Office; U.S. DEPARTMENT OF COMMERCE
Under the Paperwork Reduction Act of 1995, no persons are required to respond to a collection of information unless it displays a valid OMB control number.

REQUEST FOR EXPEDITED EXAMINATION OF A DESIGN APPLICATION (37 CFR 1.155)

Application Number	TO BE ASSIGNED
Filing Date	June 30, 2006
First Named Inventor	HoDong Sung
Title	Portion Of A Shoe Upper
Atty Docket Number	015127.00670

HAND DELIVER TO THE DESIGN GROUP DIRECTOR'S OFFICE
-or- ADDRESS TO:
MAIL STOP EXPEDITED DESIGN
COMMISSIONER FOR PATENTS
P.O. Box 1450
Alexandria, VA 22313-1450

This is a request for expedited examination of a design application under 37 CFR 1.155.

NOTE: If the Request made by this form accompanies original application papers, include form PTO/SB/18 "Design Patent Application Transmittal" or its equivalent.

A preexamination search was conducted. The field of search was:

Class D2/896, 902, 907, 908, 943, 944, 945, 946, 969, 972, 973, 974 and 977

Related applications: ____

If not previously filed for the above-identified application, the following items required by 37 CFR 1.155 are enclosed:

Formal drawings (see 37 CFR 1.84).

The fee set forth in 37 CFR 1.17(k).

An information disclosure statement in compliance with 37 CFR 1.98.

8-4-06
Approved
Jacqueline M. Stone
Jacqueline M. Stone, Director
Technology Center 1700/2900

June 30, 2006
Date

/Darrell G. Mottley/
Signature

202-824-3000
Telephone Number

Darrell G. Mottley, Registration No. 42,912
Typed or printed name

WARNING: Information on this form may become public. Credit card information should not be included on this form. Provide credit card information and authorization on PTO-2038.

This collection of information is required by 37 CFR 1.155. The information is required to obtain or retain a benefit by the public which is to file (and by the USPTO to process) an application. Confidentiality is governed by 35 U.S.C. 122 and 37 CFR 1.14. This collection is estimated to take 6 minutes to complete, including gathering, preparing, and submitting the completed application form to the USPTO. Time will vary depending upon the individual case. Any comments on the amount of time you require to complete this form and/or suggestions for reducing this burden, should be sent to the Chief Information Officer, U.S. Patent and Trademark Office, U.S. Department of Commerce, P.O. Box 1450, Alexandria, VA 22313-1450. DO NOT SEND FEES OR COMPLETED FORMS TO THIS ADDRESS. **SEND TO: Mail Stop Expedited Design, Commissioner for Patents, P.O. Box 1450, Alexandria, VA 22313-1450.**

If you need assistance in completing the form, call 1-800-PTO-9199 and select option 2.

UNITED STATES PATENT AND TRADEMARK OFFICE

Commissioner for Patents
United States Patent and Trademark Office
P.O. Box 1450
Alexandria, VA 22313-1450
www.uspto.gov

Timothy H. Van Dyke
Beusse Wolter Sanks Mora & Maire, P.A.
Suite 2500
390 North Orange Avenue
Orlando FL 32801

COPY MAILED

APR 0 4 2008

OFFICE OF PETITIONS

In re Application of	:	
Tom Gettings	:	
Application No.: 29/247790	:	DECISION ON
Filing or 371(c) Date: 07/12/2006	:	PETITION
Title of Invention:	:	
FISHING DEVICE	:	

This is a decision in response to the petition under 37 CFR 1.181(a) to withdraw notice of abandonment, filed February 21, 2008. The delay in treating this petition is regretted.

This Petition is hereby **dismissed**.

Any further petition must be submitted within TWO (2) MONTHS from the mail date of this decision. Extensions of time under 37 CFR 1.136(a) are permitted. The reconsideration request should include a cover letter entitled "Renewed Petition under [insert the applicable code section]." This is **not** final agency action within the meaning of 5 U.S.C. § 704.

Background

The above-identified application became abandoned for failure to timely and properly reply to the Notice of Allowabiltiy, mailed July 19, 2007. The Notice set a three (3) month period for reply. No extensions of time were available under 37 CFR 1.136(a).

Applicant filed a communication in response to the Notice on August 7, 2007, accepting the Examiner's Amendment in the Notice of Allowability, and stating that the replacement drawings filed June 28, 2007 satisfactorily showed the design being claimed; however, no corrected drawings were filed.

The present petition

Applicant files the present petition and requests withdrawal of the holding of abandonment. Applicant refers to the August 7, 2007 communication, and asserts that the Examiner acknowledged the Notice of Abandonment was issued in error and requested the filing of a petition to withdraw the Notice of Abandonment.

Applicable Law, Rules and MPEP

The statute, 35 U.S.C. § 133, Time for prosecuting application, states

> Upon failure of the applicant to prosecute the application within six months after any action therein, of which notice has been given or mailed to the applicant, or within such shorter time, not less than thirty days, as fixed by the Director in such action, the application shall be regarded as abandoned by the parties thereto, unless it be shown to the satisfaction of the Director that such delay was unavoidable.

This section of the statute is further clarified in Office rule, 37 CFR § 1.135, Abandonment for failure to reply within time period, which states

> (a) If an applicant of a patent application fails to reply within the time period provided under § 1.134 and § 1.136, the application will become abandoned unless an Office action indicates otherwise.
> (b) Prosecution of an application to save it from abandonment pursuant to paragraph (a) of this section must include such complete and proper reply as the condition of the application may require. The admission of, or refusal to admit, any amendment after final rejection or any amendment not responsive to the last action, or any related proceedings, will not operate to save the application from abandonment.
> (c) When reply by the applicant is a bona fide attempt to advance the application to final action, and is substantially a complete reply to the non-final Office action, but consideration of some matter or compliance with some requirement has been inadvertently omitted, applicant may be given a new time period for reply under § 1.134 to supply the omission. (Emphasis supplied).

This section explains that the reply must be both complete and proper as the condition of the application may require.

Further to this, the MPEP provides:

> When a reply to a final Office action substantially places the application in condition for allowance, an examiner may request that the applicant (or representative) authorize an examiner's amendment to correct the omission and place the application in condition for allowance, in which case the date of the reply is the date of such authorization (and not the date the incomplete reply was filed). An examiner also has the authority to enter the reply, withdraw the finality of the last Office action, and issue a new Office action, which may be a non-final Office action, a final Office action (if appropriate), or an action closing prosecution on the merits in an otherwise allowable application under Ex parte Quayle, 25 USPQ 74, 1935 C.D. 11, 435 O.G. 213 (Comm'r Pat. 1935) (if appropriate). These courses of action, however, are solely within the discretion of the examiner. It is the applicant's responsibility to take the necessary action in an application under a final Office action to provide a complete reply under 37 CFR 1.113. (Emphasis supplied).

MPEP 714.03

Analysis

In this instance, applicant failed to file a complete and proper reply as the condition of the application required. A review of the Notice of Allowability reveals that the Examiner required corrected drawings. There is nothing in the record from the Examiner subsequent to the Notice of Allowability that alters this requirement.

Applicant's reply to the Notice of Allowability was an attempt to have previously-filed drawings accepted, without filing any drawings. Applicant failed to file such a complete and proper reply as the condition of the application required.

Conclusion

The application is abandoned for failing to file a complete and proper reply to the Notice of Allowability.

Alternate Venue

Applicant is urged to file a petition under 37 CFR 1.137(b) stating that the delay was unintentional. Public Law 97-247, § 3, 96 Stat. 317 (1982), which revised patent and trademark fees, amended 35 U.S.C. § 41(a)(7) to provide for the revival of an "unintentionally" abandoned application without a showing that the delay in was "unavoidable." An "unintentional" petition under 37 CFR 1.137(b) must be accompanied by the required fee.

The filing of a petition under 37 CFR 1.137(b) cannot be intentionally delayed and therefore must be filed promptly. A person seeking revival due to unintentional delay can not make a statement that the delay was unintentional unless the entire delay, including the delay from the date it was discovered that the application was abandoned until the filing of the petition to revive under 37 CFR 1.137(b), was unintentional. A statement that the delay was unintentional is not appropriate if petitioner intentionally delayed the filing of a petition for revive under 37 CFR 1.137(b).

Further correspondence with respect to this matter should be addressed as follows:

By mail:	Director for Patents PO Box 1450 Alexandria, VA 22313-1450
By FAX:	(571) 273-8300 Attn: Office of Petitions
By hand:	Customer Service Window Randolph Building 401 Dulany Street

Alexandria, VA 22314

Telephone inquiries concerning this matter should be directed to the undersigned at (571) 272-3232.

Derek L. Woods
Attorney
Office of Petitions

UNITED STATES PATENT AND TRADEMARK OFFICE

Commissioner for Patents
United States Patent and Trademark Office
P.O. Box 1450
Alexandria, VA 22313-1450
www.uspto.gov

Timothy H. Van Dyke
Beusse Wolter Sanks Mora & Maire, P.A.
Suite 2500
390 North Orange Avenue
Orlando FL 32801

COPY MAILED

JUL 0 2 2008

OFFICE OF PETITIONS

In re Application of	:	
Tom Gettings	:	
Application No.: 29/247790	:	DECISION ON
Filing or 371(c) Date: 07/12/2006	:	PETITION
Title of Invention:	:	
FISHING DEVICE	:	

This is a decision in response to the petition to revive the application under 37 CFR 1.137(b), filed May 12, 2008.

This Petition is hereby **granted**.

The above-identified application became for failure to submit formal drawings in a timely manner in reply to the Notice of Allowability mailed July 19, 2007, which set a period for reply of three (3) months. Accordingly, the application became abandoned on October 20, 2007.

The petition satisfies the requirements of 37 CFR 1.137(b) in that petitioner has supplied (1) the reply in the form of corrected drawings[1]; (2) the petition fee; and (3) a proper statement of unintentional delay.

Telephone inquiries concerning this matter should be directed to the undersigned at (571) 272-3232.

This application is being referred to the Office of Data Management for processing into a patent.

Derek L. Woods
Attorney
Office of Petitions

[1] The issue fee was filed on October 15, 2007.

UNITED STATES PATENT AND TRADEMARK OFFICE

Commissioner for Patents
United States Patent and Trademark Office
P.O. Box 1450
Alexandria, VA 22313-1450
www.uspto.gov

GERBER PRODUCTS COMPANY
12 VREELAND ROAD 2ND FLOOR
FLORHAM PARK NJ 07932

COPY MAILED

MAY 09 2008

In re Application of :
Kay, et al. :
Application No. 29/247,829 : ON PETITION
Filed: July 14, 2006 :
Attorney Docket No. 50516-US :

This is a decision on the petition under 37 CFR 1.137(a), filed April 15, 2008, requesting that the above-identified abandoned application be revived on the basis of unavoidable delay.

The petition under 37 CFR 1.137(a) is **DISMISSED**.

Any request for reconsideration of this decision must be submitted within **TWO (2) MONTHS** from the mail date of this decision. The reconsideration request should include a cover letter entitled "Renewed Petition under 37 CFR 1.137(a)". Extensions of time under 37 CFR 1.136(a) are permitted. No fee is required for a renewed petition.

The above-identified application became abandoned for failure to timely file corrected drawings in response to the Notice of Allowability mailed November 9, 2007. This Notice set a statutory period of three months from the mailing date of the Notice for reply. No drawings having been received, the application became abandoned on February 10, 2008. A Notice of Abandonment was mailed on March 5, 2008.

A grantable petition under 37 CFR 1.137(a) must be accompanied by: (1) the required reply, unless previously filed; (2) the petition fee as set forth in 37 CFR 1.17(l); (3) a showing to the

satisfaction of the Commissioner that the entire delay in filing the required reply from the due date for the reply until the filing of a grantable petition pursuant to 37 CFR 1.137(a) was unavoidable; and (4) any terminal disclaimer (and fee as set forth in 37 CFR 1.20(d)) required pursuant to 37 CFR 1.137(c).

Petitioner has not met requirements (3) and (4) above.

With respect to requirement (3), decisions on reviving abandoned applications on the basis of "unavoidable" delay have adopted the reasonably prudent person standard in determining if the delay was unavoidable:

> The word 'unavoidable' . . . is applicable to ordinary human affairs, and requires no more or greater care or diligence than is generally used and observed by prudent and careful men in relation to their most important business. It permits them in the exercise of this care to rely upon the ordinary and trustworthy agencies of mail and telegraph, worthy and reliable employees, and such other means and instrumentalities as are usually employed in such important business. If unexpectedly, or through the unforeseen fault or imperfection of these agencies and instrumentalities, there occurs a failure, it may properly be said to be unavoidable, all other conditions of promptness in its rectification being present.[1]

Moreover, a petition cannot be granted where a petitioner has failed to meet his or her burden of establishing that the delay was "unavoidable."[2]

Here, petitioner states that Novartis A.G. sold Gerber Products Company to Nestec S.A. in August, 2007. During the transition, Gerber lost access to the Novartis docketing system. Moreover, certain documents and due dates, including the Notice of Allowance in the above application, went missing during the transition in docketing systems. The Nestec patent group became aware of the Notice of Allowance in December of 2007, and Gerber paid the issue fee. However, neither Gerber nor Nestec submitted

---

[1] In re Mattullath, 38 App. D.C. 497, 514-15 (1912)(quoting Ex parte Pratt, 1887 Dec. Comm'r Pat. 31, 32-33 (1887)); see also Winkler v. Ladd, 221 F. Supp. 550, 552, 138 USPQ 666, 167-68 (D.D.C. 1963), aff'd, 143 USPQ 172 (D.C. Cir. 1963); Ex parte Henrich, 1913 Dec. Comm'r Pat. 139, 141 (1913).

[2] Haines v. Quigg, 673 F. Supp. 314, 316-17, 5 USPQ2d 1130, 1131-32 (N.D. Ind. 1987).

corrected drawings, as the original Notice of Allowance and Allowability were not received.

Petitioner has not demonstrated that the entire period of delay was unavoidable. Assuming arguendo that the Notice of Allowance was not received due to factor's beyond petitioner's control, petitioner has not explained why, upon being placed on notice in December of 2007 that a Notice of Allowance had issued, petitioner was unavoidably prevented from contacting the Patent Office to determine if a requirement for corrected drawings had been made in the accompanying Notice of Allowabililty.

With respect to requirement (4), petitioner has not submitted a terminal disclaimer as required by 37 CFR 1.137(d). A terminal disclaimer is required for all petitions to revive in design applications. A terminal disclaimer is not required with a petition to revive a utility or plant application filed after June 8, 1995.

Alternative Venue and Other Matters:

While the showing of record is not sufficient to establish to the satisfaction of the Commissioner that the delay was unavoidable, petitioner is not precluded from obtaining relief by filing a petition pursuant to **37 CFR 1.137(b)** on the basis of **unintentional** delay. A grantable petition pursuant to 37 CFR 1.137(b) must be accompanied by (1) The reply required to the outstanding Office action or notice, unless previously filed; (2) The petition fee as set forth in 37 CFR 1.17(m); and (3) A statement that the entire delay in filing the required reply from the due date for the reply until the filing of a grantable petition pursuant to this paragraph was unintentional.

Further correspondence with respect to this matter should be addressed as follows:

By mail: Mail Stop Petitions
Commissioner for Patents
P.O. Box 1450
Alexandria VA 22313-1450

By FAX: (571)273-8300
Attn: Office of Petitions

Telephone inquiries concerning this decision should be directed to the undersigned at (571)272-3207.

Cliff Congo
Petitions Attorney
Office of Petitions

UNITED STATES PATENT AND TRADEMARK OFFICE

Commissioner for Patents
United States Patent and Trademark Office
P.O. Box 1450
Alexandria, VA 22313-1450
www.uspto.gov

GERBER PRODUCTS COMPANY
12 VREELAND ROAD 2ND FLOOR
FLORHAM PARK NJ 07932

COPY MAILED

JUN 23 2008

OFFICE OF PETITIONS

In re Application of	:	
Kay, et al.	:	
Application No. 29/247,829	:	ON PETITION
Filed: July 14, 2006	:	
Attorney Docket No. 50516-US	:	

This is a decision on the petition under 37 CFR 1.137(b), filed May 23, 2008, requesting that the above-identified abandoned application be revived on the basis of unintentional delay.

The petition under 37 CFR 1.137(b) is **GRANTED**.

The above-identified application became abandoned for failure to timely file corrected drawings in response to the Notice of Allowability mailed November 9, 2007. This Notice set a statutory period of three months from the mailing date of the Notice for reply. No drawings having been received, the application became abandoned on February 10, 2008. A Notice of Abandonment was mailed on March 5, 2008. Applicants filed a petition to revive under 37 CFR 1.137(a) on April 15, 2008. However, the petition was dismissed in a decision mailed on May 9, 2008. The decision was dismissed because applicants did no establish unavoidable delay. In addition, applicants did not submit a terminal disclaimer.

With the instant petition, applicants paid the petition fee, made the proper statement of unintentional delay, and filed a terminal disclaimer. The required reply in the form of corrected drawings was previously filed on April 15, 2008.

The matter is being forwarded to the Office of Data Management for processing into a patent.

Telephone inquiries concerning this decision should be directed to the undersigned at (571)272-3207.

Cliff Congo
Petitions Attorney
Office of Petitions

UNITED STATES PATENT AND TRADEMARK OFFICE

Commissioner for Patents
United States Patent and Trademark Office
P.O. Box 1450
Alexandria, VA 22313-1450
www.uspto.gov

COPY MAILED

MAR 31 2008

OFFICE OF PETITIONS

NORRIS MCLAUGHLIN & MARCUS
875 THIRD AVE., 18TH FLOOR
NEW YORK, NY 10022

In re Application of :
Tak Wai Cheung et al. :
Application No. 29/247,855 : DECISION GRANTING
Filed: July 17, 2006 : STATUS UNDER 37 CFR 1.47(a)
Attorney Docket No. 102792-611 :

This is in response to the petition filed November 17, 2006, under 37 CFR 1.47(a) to accept this application notwithstanding the absence of the signature of a non-signing inventor.

The petition is **GRANTED.**

Petitioner has shown that the non-signing inventor (Lamson Nguyen) has refused to join in the filing of the above-identified application.

The above-identified application and papers have been reviewed and found in compliance with CFR 1.47(a). This application is hereby accorded Rule 1.47(a) status. As provided in Rule 1.47(c), this office will forward notice of this application's filing to the non-signing inventor at the address given in the petition. Notice of the filing of this application will also be published in the Official Gazette.

Telephone inquiries related to this decision should be directed to Irvin Dingle at (703) 306-5684.

David Bucci
Petitions Examiner
Office of Petitions

UNITED STATES PATENT AND TRADEMARK OFFICE

Commissioner for Patents
United States Patent and Trademark Office
P. O. Box 1450
Alexandria, VA 22313-1450
www. uspto. gov

COPY MAILED

MAR 3 1 2008

OFFICE OF PETITIONS

LAMSON NGUYEN
278 MAPLE AVE.
SOMERSET, NJ 08873

In re Application of
Tak Wai Cheung; Edward Fu; Lamson Nguyen; Tri Nguyen; Jeanne Marie Weller; Steven Wu ; Diane Neiman
Application No. 29/247,855
Filed: July 17, 2006
For: LAVATORY DEVICE

Dear Mr. Nguyen:

You are named as a joint inventor in the above identified United States patent application, filed under the provisions of 35 U.S.C. 116 (United States Code), and 37 CFR 1.47(a), Rules of Practice in Patent Cases. Should a patent be granted on the application you will be designated therein as a joint inventor.

As a named inventor you are entitled to inspect any paper in the file wrapper of the application, order copies of all or any part thereof (at a prepaid cost per 37 CFR 1.19) or make your position of record in the application. Alternatively, you may arrange to do any of the preceding through a registered patent attorney or agent presenting written authorization from you. If you care to join in the application, counsel of record (see below) would presumably assist you. Joining in the application would entail the filing of an appropriate oath or declaration by you pursuant to 37 CFR 1.63.

Telephone inquiries regarding this communication should be directed to the Irvin Dingle at (571) 272-3210. Requests for information regarding your application should be directed to the File Information Unit at (703) 308-2733. Information regarding how to pay for and order a copy of the application, or a specific paper in the application, should be directed to Certification Division at (571) 272-3150 or 1 (800) 972-6382 (outside the Washington D.C. area).

David Bucci
Petitions Examiner
Office of Petitions

cc:

Norris McLaughlin & Marcus
875 Third Ave., 18th Floor
New York, NY 10022

RECEIVED
CENTRAL FAX CENTER
OCT 27 2006

UNITED STATES PATENT AND TRADEMARK OFFICE

Commissioner for Patents
United States Patent and Trademark Office
P.O. Box 1450
Alexandria, VA 22313-1450
www.uspto.gov

Norris, McLaughlin & Marcus P.A.
875 Third Avenue, 18th Floor
New York NY 10022

COPY MAILED

OCT 18 2005

OFFICE OF PETITIONS

In re Application of
Cheung, et al.
Application No.: 29/221,817
Filed: January 21, 2005
Attorney Docket No.: 102792-407/ 11478D3 US2
For: LAVATORY DEVICE

DECISION ACCORDING STATUS
UNDER 37 CFR 1.47(a)

This is a decision on the reconsideration petition under 37 CFR 1.47(a), filed October 5, 2005 (certificate of mailing date October 3. 2005).

The petition is **GRANTED**.

Petitioners have shown that the non-signing inventor, Lamson Nguyen, has constructively refused to join in the filing of the above-identified application after having been presented with the application papers. Specifically, the declaration/statement of facts of Attorney Andrew N. Parfomak establishes that the non-signing inventor was successfully mailed the application papers, including the specification, claims and drawings, but he failed to respond to the request that he sign the declaration. Mr. Nguyen has not responded to numerous phone messages and mailings. Petitioners have submitted a declaration in compliance with 37 CFR 1.63 and 1.64.

It is noted that the title of the invention listed on the original transmittal letter and the executed declaration is "A Lavatory Device" and the title of the invention listed on the specification is "Air Freshener Device". Since the attorney docket number listed on the executed declaration matches the attorney docket number listed on the specification, the Office believes that the inventors executed the declaration associated with the "Air Freshener Device" specification. If the "Air Freshener Device" specification was not before the inventors when they signed the declaration, petitioners must notify the office. Petitioners should clarify the title of the invention. Petitioners should submit a new ADS that lists the correct inventors, also.

This application and papers have been reviewed and found in compliance with 37 CFR 1.47(a). This application is hereby accorded Rule 1.47(a) status.

As provided in Rule 1.47(c), this Office will forward notice of this application's filing to the non-signing inventor at the address given in the petition. Notice of the filing of this application will also be published in the Official Gazette.

Telephone inquiries should be directed to the undersigned at (571) 272-3230.

E. Shirene Willis

E. Shirene Willis
Senior Petitions Attorney
Office of Petitions

RECEIVED
CENTRAL FAX CENTER
OCT 27 2006

UNITED STATES PATENT AND TRADEMARK OFFICE
Commissioner for Patents
United States Patent and Trademark Office
P.O. Box 1450
Alexandria, VA 22313-1450
www.uspto.gov

LAMSON NGUYEN
278 MAPLE AVENUE
SOMERSET, NJ 08873

COPY MAILED
OCT 18 2005
OFFICE OF PETITIONS

In re Application of
Cheung, et al.
Application No.: 29/221,817
Filed: January 21, 2005
Attorney Docket No.: 102792-407/ 11478D3 US2
For: LAVATORY DEVICE

LETTER

Dear Mr. Nguyen:

You are named as a joint inventor in the above identified United States patent application, filed under the provisions of 35 U.S.C. 116 (United States Code), and 37 CFR 1.47(a), Rules of Practice in Patent Cases. Should a patent be granted on the application you will be designated therein as a joint inventor.

As a named inventor you are entitled to inspect any paper in the file wrapper of the application, order copies of all or any part thereof (at a prepaid cost per 37 CFR 1.19) or make your position of record in the application. Alternatively, you may arrange to do any of the preceding through a registered patent attorney or agent presenting written authorization from you. If you care to join the application, counsel of record (see below) would presumably assist you. Joining in the application would entail the filing of an appropriate oath or declaration by you pursuant to 37 CFR 1.63.

Requests for information regarding your application should be directed to the File Information Unit at (703)308-2733. Information regarding how to pay for and order a copy of the application, or a specific paper in the application, should be directed to Certification Division at (703)308-9726 or 1(800)972-6382 (outside the Washington D.C. area).

Telephone inquiries regarding this communication should be directed to the undersigned at (571) 272-3230.

E. Shirene Willis

E. Shirene Willis
Senior Petitions Attorney
Office of Petitions

ATTORNEY OF RECORD: Norris, McLaughlin & Marcus P.A.
875 Third Avenue, 18th Floor
New York NY 10022

UNITED STATES PATENT AND TRADEMARK OFFICE

Commissioner for Patents
United States Patent and Trademark Office
P.O. Box 1450
Alexandria, VA 22313-1450
www.uspto.gov

Paper No.

Andrew N. Parfomak
Norris McLaughlin &
Marcus, PA
18th Floor
875 Third Avenue
New York NY 10022

COPY MAILED

JAN 18 2007

OFFICE OF PETITIONS

In re Application of	:	
Tak Wai Cheung, Edward Fu	:	
Lamson Nguyen, Tri Nguyen,	:	
Jeanne Weller and Steven Wu	:	DECISION ACCORDING STATUS
Application No. 29/247,859	:	UNDER 37 C.F.R. § 1.47(a)
Filed: July 17, 2006	:	
Atty Docket No. 102792-613	:	

This is a decision on the "PETITION TO ADMIT OATH & DECLARATION PURSUANT TO 37 CFR 1.47(A), 35 USC 118 ..." filed November 17, 2006.

The petition is **GRANTED**.

The above-identified application was filed on July 17, 2006, with an unexecuted declaration. By Notice to File Missing Parts of Nonprovisional Application mailed August 3, 2006, applicants were required to submit an executed oath or declaration and the surcharge for its late filing. The Notice set a two (2) month time limit for response, with extensions of time obtainable under § 1.136(a).

In response, applicants filed the instant petition (and petition fee), and the required late surcharge. Accompanying the petition were four declarations executed, in combination, by joint inventors Cheung, Fu, Tri Nguyen, Weller and Wu on behalf of themselves and on behalf of non-signing joint inventor Lamson Nguyen. Applicants assert that status under 1.47(a) is proper because joint inventor Lamson Nguyen has refused to join in the application. This response was made timely by an accompanying

petition and fee for extension of time for response within the second month.

By declaration of patent attorney Andrew Parfomak (and supporting documentary evidence) applicants have shown that a copy of the application papers (specification, including claims, drawings, and oath or declaration) were presented to the non-signing inventor and that the inventor has refused to join in the application.

The declarations filed November 17, 2006, has been reviewed and found in compliance with § 1.63. The petition includes authorization to charge the petition fee and the last known address of inventor Lamson Nguyen.

In view thereof, this application is hereby accorded Rule 1.47(a) status.

The petition fee required pursuant to 1.17(g) of $200 has been charged to Deposit Account No. 14-1263, as authorized.

As provided in new Rule 1.47(c), this Office will forward notice of this application's filing to the non-signing inventor at the address given in the petition. Notice of the filing of this application will also be published in the Official Gazette.

Telephone inquiries related to this decision should be directed to the undersigned at (571) 272-3219.

Nancy Johnson
Senior Petitions Attorney
Office of Petitions

UNITED STATES PATENT AND TRADEMARK OFFICE

Commissioner for Patents
United States Patent and Trademark Office
P.O. Box 1450
Alexandria, VA 22313-1450
www.uspto.gov

LAMSON NGUYEN
278 MAPLE AVE.
SOMERSET NJ 08873

COPY MAILED

JAN 18 2007

OFFICE OF PETITIONS

In re Application of :
Tak Wai Cheung, Edward Fu :
Lamson Nguyen, Tri Nguyen, :
Jeanne Weller and Steven Wu : LETTER
Application No. 29/247,859 :
Filed: July 17, 2006 :
Atty Docket No. 102792-613 :

Dear Mr. Nguyen:

You are named as a joint inventor in the above-identified United States patent application filed under the provisions of 35 U.S.C. 116 (United States Code) and 37 CFR 1.47(a), Rules of Practice in Patent Cases. Should a patent be granted on the application you will be designated therein as a joint inventor.

As a named inventor you are entitled to inspect any paper in the file wrapper of the application, order copies of all or any part thereof (at a prepaid cost per 37 CFR 1.19) or make your position of record in the application. Alternatively, you may arrange to do any of the preceding through a registered patent attorney or agent presenting written authorization from you. If you care to join the application, counsel of record (see below) would presumably assist you. Joining in the application would entail the filing of an appropriate oath or declaration by you pursuant to 37 CFR 1.63. However, no action on your part is required for this patent to issue with you as a named inventor.

Telephone inquiries regarding this communication should be directed to Petitions Attorney Nancy Johnson at (571) 272-3219. Requests for information regarding your application should be directed to the File Information Unit at (703) 308-2733.

Information regarding how to pay for and order a copy of the application, or a specific paper in the application, should be directed to the Certification Division at (571) 272-3150 or 1-800-972-6382 (outside the Washington D.C. area).

Nancy Johnson
Senior Petitions Attorney
Office of Petitions

Andrew N. Parfomak
Norris McLaughlin &
Marcus, PA
18th Floor
875 Third Avenue
New York NY 10022

UNITED STATES PATENT AND TRADEMARK OFFICE

Commissioner for Patents
United States Patent and Trademark Office
P.O. Box 1450
Alexandria, VA 22313-1450
www.uspto.gov

Bruce S. Shapiro
Sr.Group Patent Counsel
Black & Decker Corporation
701 E. Joppa Rd. - TW199
Towson MD 21286

COPY MAILED

DEC 0 7 2007

OFFICE OF PETITIONS

In re Application of :
Mark Baxter :
Application No. 29/247,870 : ON PETITION
Filed: July 18, 2006 :
Attorney Docket No. D-US-CS-1233 :

This is a decision on the petition under 37 CFR 1.137(b), filed October 31, 2007, to revive the above-identified application.

The petition is **GRANTED**.

The above-identified application became abandoned for failure to submit the issue fee in a timely manner in reply to the Notice of Allowance mailed July 13, 2007, which set a statutory period for reply of three (3) months. Accordingly, by operation of law, the above-identified application became abandoned on October 14, 2007.

The petition satisfies the conditions for revival pursuant to the provisions of 37 CFR 1.137(b) in that (1) the reply in the form of the issue fee; (2) the petition fee of $1,540; (3) the required statement of unintentional delay; and (4) a terminal disclaimer and fee as required by 37 CFR 1.137(d) have been received. Accordingly, the issue fee is accepted as having been unintentionally delayed.

The terminal disclaimer is accepted and has been made of record.

Telephone inquiries concerning this decision should be directed to Carl Friedman at (571) 272-6842.

The application file is being referred to the Office of Patent Publication.

David Bucei
Petitions Examiner
Office of Petitions

Application Number	Application/Control No.	Applicant(s)/Patent Under Reexamination
	29247870	BAXTER, MARK

Document Code - disq	Internal Document – DO NOT MAIL

TERMINAL DISCLAIMER	☒ APPROVED	☐ DISAPPROVED
Date Filed: 10/31/2007	**This patent is subject to a Terminal Disclaimer**	

Approved/Disapproved by:
Carl Friedman

UNITED STATES PATENT AND TRADEMARK OFFICE

Commissioner for Patents
United States Patent and Trademark Office
P.O. Box 1450
Alexandria, VA 22313-1450
www.uspto.gov

COCHRAN FREUND & YOUNG LLC
2026 CARIBOU DR
SUITE 200
FORT COLLINS CO 80525

COPY MAILED

OCT 1 0 2006

OFFICE OF PETITIONS

In re Application of :
Robert W. Noyer et al. :
Application No. 29/247,932 : DECISION ON PETITION
Filed: July 20, 2006 : TO MAKE SPECIAL UNDER
Attorney Docket No. NOYR.01USD1 : 37 CFR 1.102(c)(1)
:

This is a decision on the petition under 37 CFR 1.102(c)(1), filed August 9, 2006, to make the above-identified application special based on applicant's age as set forth in M.P.E.P. § 708.02, Section IV.

The petition is **GRANTED**.

A grantable petition to make an application special under 37 CFR 1.102(c)(1) and MPEP § 708.02, Section IV: Applicant's Age, must be accompanied by evidence showing that at least one of the applicants is 65 years of age, or more, such as a birth certificate or a statement by applicant. No fee is required.

The instant petition includes a signed Declaration under 37 C.F.R 1.102(c)(1) stating that applicant is over 65 years of age. Accordingly, the above-identified application has been accorded "special" status.

Telephone inquiries concerning this decision should be directed to Charles Smoot at 571-272-3299.

All other inquiries concerning either the examination or status of the application should be directed to the Technology Center.

The application is being forwarded to the Technology Center Art Unit 2913 for action on the merits commensurate with this decision.

David Bucci
Petitions Examiner
Office of Petitions

UNITED STATES PATENT AND TRADEMARK OFFICE

Commissioner for Patents
United States Patent and Trademark Office
P.O. Box 1450
Alexandria, VA 22313-1450
www.uspto.gov

Bristol-Myers Squibb Company
100 HEADQUARTERS PARK DRIVE
SKILLMAN NJ 08558

COPY MAILED

SEP 0 8 2008

OFFICE OF PETITIONS

In re Application of :
Ian Stewart **Tabron** et al. :
Application No. 29/247,947 : DECISION ON PETITION
Filed: July 21, 2006 :
Attorney Docket No. CV0379 :

This is a decision on the petition under 37 CFR 1.137(b), filed December 5, 2007, to revive the above-identified design application.

The petition is GRANTED.

The application became abandoned for failure to timely pay the issue fee on or before November 30, 2007, as required by the Notice of Allowance and Fee(s) Due, mailed August 31, 2007, which set a statutory period for reply of three (3) months. Accordingly, the application became abandoned on December 1, 2007. A Notice of Abandonment was mailed on February 11, 2008.

The petition satisfies the requirements of 37 CFR 1.137(b) in that petitioner has supplied (1) the reply in the form of the $820.00 issue fee, (2) the petition fee of $1540.00, (3) a proper statement of unintentional delay, and (4) a terminal disclaimer and fee as required by 37 CFR 1.137(d). Accordingly, the failure to timely pay the issue fee as required by the Notice of Allowance and Fee(s) Due is accepted as being unintentionally delayed.

The terminal disclaimer is accepted and has been made of record. Any continuing application filed from this application must contain a copy of the terminal disclaimer. The copy of the terminal disclaimer must be filed with a cover letter requesting the terminal disclaimer be recorded on the continuing application. A copy of this decision should be attached to the cover letter.

Telephone inquiries concerning this decision should be directed to Phyllis Spivack at (571)272-6052 or in her absence, the undersigned at 571-272-7099.

This application is being referred to the Office of Data Management for further processing in accordance with this decision on petition.

David Bucci
Petitions Examiner
Office of Petitions

PTO/SB/27 (09-04)

REQUEST FOR EXPEDITED EXAMINATION OF A DESIGN APPLICATION (37 CFR 1.155)		
	Application Number	29/247,962
	Filing Date	July 21, 2006
	First Named Inventor	Janet K. Lau
	Title	Integrated Tabbed Note and Clip Kit
	Atty Docket Number	CLIPD010

ADDRESS TO:

MAIL STOP EXPEDITED DESIGN
COMMISSIONER FOR PATENTS
P.O. Box 1450
Alexandria, VA 22313-1450

This is a request for expedited examination of a design application under 37 CFR 1.155.

NOTE: If the Request made by this form accompanies original application papers, include form PTO/SB/18 "Design Patent Application Transmittal" or its equivalent.

A preexamination search was conducted. The field of search was:

D19/86, D19/65, D19/1, D19/99, D19/34, D19/90

40/641, 40/659, 40/666, 40/309, 40/360

24/67R, 24/67.3, 24/67.5, 24/67.9, 24/67.11, 24/365, 24/561, 24/710.8, 24/3.12

116/237

281/42

Related applications: _____

If not previously filed for the above-identified application, the following items required by 37 CFR 1.155 are enclosed:

- Formal drawings (see 37 CFR 1.84).
- The fee set forth in 37 CFR 1.17(k).
- An information disclosure statement in compliance with 37 CFR 1.98.

Approved 9-21-06
Jacqueline M. Stone
Jacqueline M. Stone, Director
Technology Center 1700/2900

/Melvin D. Chan/	July 21, 2006
Signature	Date
Melvin D. Chan	39,626
Typed or printed name	Registration Number, if applicable
408-701-0035	
Telephone Number	

WARNING: Information on this form may become public. Credit card information should not be included on this form. Provide credit card information and authorization on PTO-2038.

UNITED STATES PATENT AND TRADEMARK OFFICE

Commissioner for Patents
United States Patent and Trademark Office
P.O. Box 1450
Alexandria, VA 22313-1450
www.uspto.gov

Maxey Law Offices, PLLC
13630 58TH ST. NORTH
SUITE 101
CLEARWATER FL 33760

COPY MAILED

APR 09 2008

OFFICE OF PETITIONS

In re Application of :
Luke LEPPKY :
Application No. 29/248,000 : ON PETITION
Filed: July 25, 2006 :
Attorney Docket No. 06065 :

This is a decision on the petition under the unintentional provisions of 37 CFR 1.137(b), filed 8/22/2007, to revive the above-identified application.

The petition is **DISMISSED**.

Any request for reconsideration of this decision must be submitted within TWO (2) MONTHS from the mail date of this decision. Extensions of time under 37 CFR 1.136(a) are permitted. The reconsideration request should include a cover letter entitled "Renewed Petition under 37 CFR 1.137(b)." This is **not** a final agency action within the meaning of 5 U.S.C. § 704.

The application became abandoned for failure s to timely pay the issue and publication fees on or before 7/18/2007, as required by the Notice of Allowance and Fee(s) Due, mailed 4/18/2007, which set a statutory period for reply of three (3) months. Accordingly, the application became abandoned on 7/19/2007.

A grantable petition under 37 CFR 1.137(b) must be accompanied by: (1) the required reply, unless previously filed; (2) the petition fee as set forth in 37 CFR 1.17(m); (3) a statement that the entire delay in filing the required reply from the due date for the reply until the filing of a grantable petition pursuant to 37 CFR 1.137(b) was unintentional; and (4) any terminal disclaimer (and fee as set forth in 37 CFR 1.20(d)) required by 37 CFR 1.137(d). Where there is a question as to whether either the abandonment or the delay in filing a petition under 37 CFR 1.137 was unintentional, the Director may require additional information. See MPEP 711.03(c)(II)(C) and (D). The instant petition lacks item(s) (4).

Since the above-identified application is a design application, 37 CFR 1.137(d)(1) requires a terminal disclaimer dedicating to the public a terminal part of the term of any patent granted on the application equivalent to the period of abandonment. The period of abandonment will be computed to be the number of months from the date of abandonment to the date of filing a grantable petition. A terminal disclaimer fee of $ 130 ($65 if small entity) is required. If the terminal disclaimer is signed by an assignee, the assignee must comply with the requirements of 37 CFR 3.73(b).

Further correspondence with respect to this matter should be addressed as follows:

By Mail: Mail Stop PETITION
Commissioner for Patents
P. O. Box 1450
Alexandria, VA 22313-1450

By hand: U. S. Patent and Trademark Office
Customer Service Window, Mail Stop Petitions
Randolph Building
401 Dulany Street
Alexandria, VA 22314

The centralized facsimile number is **(571) 273-8300.**

Telephone inquiries concerning this decision should be directed to Quyen Leung at (571) 272-6051 or, in her absence, the undersigned at (571) 272-7099.

for David A. Bucci
Petitions Examiner
Office of Petitions

UNITED STATES PATENT AND TRADEMARK OFFICE

Commissioner for Patents
United States Patent and Trademark Office
P.O. Box 1450
Alexandria, VA 22313-1450
www.uspto.gov

Maxey Law Offices, PLLC
13630 58TH ST. NORTH
SUITE 101
CLEARWATER FL 33760

COPY MAILED

AUG 0 8 2008

In re Application of :
Luke **LEPPKY** :
Application No. 29/248,000 : ON PETITION
Filed: July 25, 2006 :
Attorney Docket No.06065 :

This is a decision on the renewed petition under 37 CFR 1.137(b), filed April 16, 2008, to revive the above-identified design application.

The petition is **GRANTED**.

The application became abandoned for failure to timely pay the issue fee on or before July 18, 2007, as required by the Notice of Allowance and Fee(s) Due, mailed April 18, 2007, which set a statutory period for reply of three (3) months. Accordingly, the application became abandoned on July 19, 2007.

The petition satisfies the requirements of 37 CFR 1.137(b) in that petitioner has supplied (1) the reply in the form of the $400.00 issue fee, (2) the petition fee of $750.00, (3) a proper statement of unintentional delay, and (4) a terminal disclaimer and fee as required by 37 CFR 1.137(d). Accordingly, the failure to timely pay the issue fee as required by the Notice of Allowance and Fee(s) Due is accepted as being unintentionally delayed.

The terminal disclaimer is accepted and has been made of record. Any continuing application filed from this application must contain a copy of the terminal disclaimer. The copy of the terminal disclaimer must be filed with a cover letter requesting the terminal disclaimer be recorded on the continuing application. A copy of this decision should be attached to the cover letter.

Telephone inquiries concerning this decision should be directed to Phyllis Spivack at (571) 272-6051 or in her absence, the undersigned at 571-272-7099.

This application is being referred to the Office of Data Management for further processing to issuance of a patent.

for David Bucci
Petitions Examiner
Office of Petitions

UNITED STATES PATENT AND TRADEMARK OFFICE

Commissioner for Patents
United States Patent and Trademark Office
P.O. Box 1450
Alexandria, VA 22313-1450
www.uspto.gov

PATENTTM.US
P. O. BOX 82788
PORTLAND, OR 97282-0788

COPY MAILED

FEB 0 2 2009

OFFICE OF PETITIONS

In re Application of :
Kevin Ball, et. al. :
Application No. 29/248,086 : DECISION ON PETITION
Filed: July 27, 2006 :
Attorney Docket No. S-399 :

This is a decision on the petition under the unintentional provisions of 37 CFR 1.137(b), filed December 27, 2008, to revive the above-identified application.

The petition is **GRANTED**.

The application became abandoned for failure to reply in a timely manner to the Notice of Allowance and Fee(s) Due, mailed August 19, 2008. The Notice set a period for reply of three (3) months from the mail date of the Notice. Accordingly, the application became abandoned on November 20, 2008.

The petition satisfies the requirements of 37 CFR 1.137(b) in that petitioner has supplied (1) the reply in the form of payment of the issue fee of $430, (2) the petition fee of $810; (3) a proper statement of unintentional delay; and (4) a terminal disclaimer and fee as set forth in 37 CFR 1.20(d)) required by 37 CFR 1.137(d).

The terminal disclaimer is accepted and has been made of record. Any continuing application filed from this application must contain a copy of the terminal disclaimer. The copy of the terminal disclaimer must be filed with a cover letter requesting the terminal disclaimer be recorded on the continuing application. A copy of this decision should be attached to the cover letter.

Telephone inquiries concerning this decision should be directed to Denise Williams at (571) 272-8930.

This application is being referred to the Office of Data Management for further processing into a patent.

Andrea Smith
Petitions Examiner
Office of Petitions

PTO/SB/27 (05-03)
Approved for use through 04/30/2003. OMB 0651-0031
U.S. Patent and Trademark Office; U.S. DEPARTMENT OF COMMERCE
Under the Paperwork Reduction Act of 1995, no persons are required to respond to a collection of information unless it displays a valid OMB control number.

REQUEST FOR EXPEDITED EXAMINATION OF A DESIGN APPLICATION (37 CFR 1.155)

Application Number	TBD 29/248,112
Filing Date	July 27, 2006
First Named Inventor	Jeffrey Henderson
Title	Portion Of A Shoe Upper
Atty Docket Number	015127.00745

HAND DELIVER TO THE DESIGN GROUP DIRECTOR'S OFFICE
-or- ADDRESS TO:
MAIL STOP EXPEDITED DESIGN
COMMISSIONER FOR PATENTS
P.O. Box 1450
Alexandria, VA 22313-1450

This is a request for expedited examination of a design application under 37 CFR 1.155.

NOTE: If the Request made by this form accompanies original application papers, include form PTO/SB/18 "Design Patent Application Transmittal" or its equivalent.

A preexamination search was conducted. The field of search was:

D2/896, 902, 907, 908, 910, 911, 943, 944, 945, 946, 969, 972, 973 and 974

Related applications: _____

If not previously filed for the above-identified application, the following items required by 37 CFR 1.155 are enclosed:

Formal drawings (see 37 CFR 1.84).

The fee set forth in 37 CFR 1.17(k).

An information disclosure statement in compliance with 37 CFR 1.98.

8-22-06
Approved
Jacqueline M. Stone
Jacqueline M. Stone, Director
Technology Center 1700/2900

7/28/06	/Anthony W. Kandare/
Date	Signature
202-824-3000	Anthony W. Kandare, Reg. No. 48,830
Telephone Number	Typed or printed name

WARNING: Information on this form may become public. Credit card information should not be included on this form. Provide credit card information and authorization on PTO-2038.

This collection of information is required by 37 CFR 1.155. The information is required to obtain or retain a benefit by the public which is to file (and by the USPTO to process) an application. Confidentiality is governed by 35 U.S.C. 122 and 37 CFR 1.14. This collection is estimated to take 6 minutes to complete, including gathering, preparing, and submitting the completed application form to the USPTO. Time will vary depending upon the individual case. Any comments on the amount of time you require to complete this form and/or suggestions for reducing this burden, should be sent to the Chief Information Officer, U.S. Patent and Trademark Office, U.S. Department of Commerce, P.O. Box 1450, Alexandria, VA 22313-1450. DO NOT SEND FEES OR COMPLETED FORMS TO THIS ADDRESS. **SEND TO: Mail Stop Expedited Design, Commissioner for Patents, P.O. Box 1450, Alexandria, VA 22313-1450.**

If you need assistance in completing the form, call 1-800-PTO-9199 and select option 2.

UNITED STATES PATENT AND TRADEMARK OFFICE

COMMISSIONER FOR PATENTS
UNITED STATES PATENT AND TRADEMARK OFFICE
P.O. BOX 1450
ALEXANDRIA, VA 22313-1450
WWW.USPTO.GOV

Paper No.

FORD GLOBAL TECHNOLOGIES, LLC
FAIRLANE PLAZA SOUTH, SUITE 800
330 TOWN CENTER DRIVE
DEARBORN MI 48126

COPY MAILED
JAN 15 2010

In re Application of	:	
Kaoud et al.	:	
Application No. 29/248,115	:	DECISION ON PETITION
Filed: July 28, 2006	:	PURSUANT TO
Attorney Docket No.: 81145787	:	37 C.F.R. § 1.137(a)
Title: VEHICLE GRILLE	:	

This is a decision on the "Petition to Accept Delayed Payment of Issue Fee Pursuant to 37 C.F.R. § 1.316(b)" filed on December 14, 2007, to revive the above-identified application. This submission is being treated as a petition pursuant to 37 C.F.R. § 1.137(a).[1]

The petition pursuant to 37 C.F.R. § 1.137(a) is **DISMISSED.**

The above-identified application became abandoned for failure to submit the issue fee in a timely manner in reply to the Notice of Allowance and Issue Fee Due, mailed July 31, 2007, which set a shortened statutory period for reply of three months. No extensions of time are permitted for transmitting issue fees.[2] Accordingly, the above-identified application became abandoned on November 1, 2007. A Notice of Abandonment was mailed on November 28, 2007.

The Relevant Portion of the MPEP

Section 711.03(c)(I)(A) sets forth, *in toto*:

---

1 See petition, page 2. A call was placed to Petitioner on December 28, 2009, in an effort to ascertain whether Petitioner had intended to submit a petition pursuant to Rule 1.137(a). A message was left, and as of the mailing date of this decision, it does not appear that this call has been returned.

2 See MPEP § 710.02(e)(III).

In *Delgar v. Schulyer*, 172 USPQ 513 (D.D.C. 1971), the court decided that the Office should mail a new Notice of Allowance in view of the evidence presented in support of the contention that the applicant's representative did not receive the original Notice of Allowance. Under the reasoning of *Delgar*, an allegation that an Office action was never received may be considered in a petition to withdraw the holding of abandonment. If adequately supported, the Office may grant the petition to withdraw the holding of abandonment and remail the Office action. That is, the reasoning of Delgar is applicable regardless of whether an application is held abandoned for failure to timely pay the issue fee (35 U.S.C. 151) or for failure to prosecute (35 U.S.C. 133).

To minimize costs and burdens to practitioners and the Office, the Office has modified the showing required to establish nonreceipt of an Office action. The showing required to establish nonreceipt of an Office communication must include a statement from the practitioner describing the system used for recording an Office action received at the correspondence address of record with the USPTO. The statement should establish that the docketing system is sufficiently reliable. It is expected that the record would include, but not be limited to, the application number, attorney docket number, the mail date of the Office action and the due date for the response.

Practitioner must state that the Office action was not received at the correspondence address of record, and that a search of the practitioner's record(s), including any file jacket or the equivalent, and the application contents, indicates that the Office action was not received. A copy of the record(s) used by the practitioner where the non-received Office action would have been entered had it been received is required.

A copy of the practitioner's record(s) required to show non-receipt of the Office action should include the master docket for the firm. That is, if a three month period for reply was set in the nonreceived Office action, a copy of the master docket report showing all replies docketed for a date three months from the mail date of the nonreceived Office action must be submitted as documentary proof of nonreceipt of the Office action. If no such master docket exists, the practitioner should so state and provide other evidence such as, but not limited to, the following: the application file jacket; incoming mail log; calendar; reminder system; or the individual docket record for the application in question.

The showing outlined above may not be sufficient if there are circumstances that point to a conclusion that the Office action may have been lost after receipt rather than a conclusion that the Office action was lost in the mail (e.g., if the practitioner has a history of not receiving Office actions).

Evidence of nonreceipt of an Office communication or action (e.g., Notice of Abandonment or an advisory action) other than that action to which reply was required to avoid abandonment would not warrant withdrawal of the holding of abandonment. Abandonment takes place by operation of law for failure to reply to an Office

action or timely pay the issue fee, not by operation of the mailing of a Notice of Abandonment. See *Lorenz v. Finkl*, 333 F.2d 885, 889-90, 142 USPQ 26, 29-30 (CCPA 1964); *Krahn v. Commissioner*, 15 USPQ2d 1823, 1824 (E.D. Va 1990); *In re Application of Fischer*, 6 USPQ2d 1573, 1574 (Comm'r Pat. 1988).

Analysis

A grantable petition pursuant to 37 C.F.R. § 1.137(a) must be accompanied by:

(1) The reply required to the outstanding Office action or notice, unless previously filed;
(2) The petition fee as set forth in 37 C.F.R. § 1.17(l);
(3) A showing to the Commissioner that the entire delay in filing the required reply from the due date for the reply until the filing of a grantable petition was unavoidable, and;
(4) Any terminal disclaimer (and fee as set forth in 37 C.F.R. § 1.20(d)) required pursuant to paragraph (d) of this section.

With this petition, Petitioner has submitted the issue fee and a statement of facts.

The petition fee will be charged to Petitioner's Deposit Account in due course, as authorized on the second page of this petition.

Petitioner has met requirements (1) and (2) of Rule 1.137(a).

Regarding the third requirement of Rule 1.137(a), the record does not support a finding that the entire period of delay was unavoidable. Petitioner has alleged that the Office communication was not received,[3] and that he searched both the "electronic and paper records for evidence that such communication was received" and has affirmatively stated that "[n]o evidence was found."[4] However Petitioner's assertion of non-receipt has not been adequately supported, as will be now pointed out.

---

3 Petition, page 2.
4 Id. See also Tobey declaration of facts, paragraph 5, which discusses a search of the electronic record and Burmeister declaration of facts, paragraphs 5-6, which discuss a search of both the electronic record and the paper file.

First, Petitioner has not provided a **statement describing the system used for recording an Office communication received** at the correspondence address of record with the USPTO. Moreover, Petitioner has not established that the docketing system is sufficiently **reliable.**

Ms. Tobey has indicated that when a Notice of Allowance is received, the document is date-stamped, scanned, and entered into "the database record."[5] Ms. Burmeister has indicated that when a Notice of Allowance is received, she creates a docket entry in the "patent docketing database," creates a "task reminder" in "the database record" that is dated three-months from the mailing date of the notice of allowance, and places the original document into a file folder.[6]

However, this showing does not explain how this docketing system serves to ensure that the correspondence recorded therein is responded to in a timely manner. **Does this "task reminder" serve as a tickler that is sent to the responsible attorneys?**

Second, Petitioner has not provided a **copy of the record(s)** used by the practitioner where the allegedly non-received non-final Office action would have been entered had it been received.

Third, Petitioner has not provided a copy of the **master docket,** or stated that no such master docket exists and submitted other forms of evidence referenced in the portion of the MPEP reproduced above.

Regarding the fourth requirement of Rule 1.137(a), since this application is a design application, a terminal disclaimer and the associated fee are required. See 37 C.F.R §§ 1.137(a)(4) and (d).

If reconsideration of this decision is desired, any response to this decision must be submitted within **TWO MONTHS** from the mail date of this decision. Extensions of time under 37 C.F.R. § 1.136(a) are permitted. The reply should include a cover letter entitled "Renewed Petition pursuant to 37 C.F.R. § 1.137(a)." This is not a final agency action within the meaning of 5 U.S.C § 704.

Any submission in response to this decision should indicate in a prominent manner that the attorney handling this matter is Paul

5 Tobey declaration of facts, paragraph 3.
6 Burmeister declaration of facts, paragraph 3.

Shanoski, and may be submitted by mail,[7] hand-delivery,[8] or facsimile.[9] Registered users of EFS-Web may alternatively submit a response to this decision via EFS-Web.[10]

If responding by mail, Petitioner is advised not to place the undersigned's name on the envelope. Only the information that appears in the footnote should be included - adding anything else to the address will delay the delivery of the response to the undersigned.

Telephone inquiries regarding *this decision* should be directed to Senior Attorney Paul Shanoski at (571) 272-3225.[11] All other inquiries concerning examination procedures should be directed to the Technology Center.

/Paul Shanoski/
Paul Shanoski
Senior Attorney
Office of Petitions

---

7 Mail Stop Petition, Commissioner for Patents, United States Patent and Trademark Office, P.O. Box 1450, Alexandria, VA, 22313-1450.
8 Customer Window, Randolph Building, 401 Dulaney Street, Alexandria, VA, 22314.
9 (571) 273-8300- please note this is a central facsimile number.
10 https://sportal.uspto.gov/authenticate/authenticateuserlocalepf.html
11 Petitioner will note that all practice before the Office should be in writing, and the action of the Office will be based exclusively on the written record in the Office. See 37 C.F.R. § 1.2. As such, Petitioner is reminded that no telephone discussion may be controlling or considered authority for any further action(s) of Petitioner.

UNITED STATES PATENT AND TRADEMARK OFFICE

COMMISSIONER FOR PATENTS
UNITED STATES PATENT AND TRADEMARK OFFICE
P.O. BOX 1450
ALEXANDRIA, VA 22313-1450
WWW.USPTO.GOV

Paper No.

FORD GLOBAL TECHNOLOGIES, LLC
FAIRLANE PLAZA SOUTH, SUITE 800
330 TOWN CENTER DRIVE
DEARBORN MI 48126

MAILED

MAR 29 2010

OFFICE OF PETITIONS

In re Application of	:	
Kaoud et al.	:	
Application No. 29/248,115	:	DECISION ON RENEWED PETITION
Filed: July 28, 2006	:	PURSUANT TO
Attorney Docket No.: 81145787	:	37 C.F.R. § 1.137(a)
Title: VEHICLE GRILLE	:	

This is a decision on the renewed petition pursuant to 37 C.F.R. § 1.137(a), filed on February 17, 2010.

This renewed petition pursuant to 37 C.F.R. § 1.137(a) is **DISMISSED.**

The above-identified application became abandoned for failure to submit the issue fee in a timely manner in reply to the Notice of Allowance and Issue Fee Due, mailed July 31, 2007, which set a shortened statutory period for reply of three months. No extensions of time are permitted for transmitting issue fees.[1] Accordingly, the above-identified application became abandoned on November 1, 2007. A Notice of Abandonment was mailed on November 28, 2007.

Procedural History and Analysis

A grantable petition pursuant to 37 C.F.R. § 1.137(a) must be accompanied by:

(1) The reply required to the outstanding Office action or notice, unless previously filed;
(2) The petition fee as set forth in 37 C.F.R. § 1.17(l);
(3) A showing to the Commissioner that the entire

1 See MPEP § 710.02(e)(III).

delay in filing the required reply from the due date for the reply until the filing of a grantable petition was unavoidable, and;

(4) Any terminal disclaimer (and fee as set forth in 37 C.F.R. § 1.20(d)) required pursuant to paragraph (d) of this section.

An original petition pursuant to 37 C.F.R. § 1.137(a) was filed on December 14, 2007, along with the issue fee and a statement of facts. The original petition was dismissed via the mailing of a decision on January 15, 2010, which indicated that requirements (1) and (2) of Rule 1.137(a) had been satisfied.

With this renewed petition, Petitioner has included the petition fee, two statements of facts, and both a terminal disclaimer and the associated fee. As such, the fourth requirement of Rule 1.137(a) has been satisfied.

To date, requirements (1), (2), and (4) of Rule 1.137(a) have been satisfied.

Regarding the third requirement of Rule 1.137(a), the record does not support a finding that the entire period of delay was unavoidable, since the allegation of non-receipt has not been adequately supported, as will be now pointed out.

With the original petition, Petitioner alleged that the Office communication was not received, and indicated that a search of both the electronic and the paper records indicates that the Office action was not received.

With this renewed petition, Petitioner has established that the system used for recording an Office communication received at the correspondence address of record with the USPTO is sufficiently reliable: Ms. Burmeister has indicated that when a Notice of Allowance is received, she creates a "task" which appears in "multiple reports including reports for the attorney of record, reports of all tasks due and a report of tasks for a specific record."[2] This statement is being construed to mean that these reports are distributed to the attorney of record. Petitioner must notify the Office if this is not a correct interpretation of this statement.

2 Burmeister declaration of facts provided with this renewed petition, paragraph 3b.

As such, this task reminder serves as a tickler that is sent to the responsible attorney.

Petitioner has further provided a copy of the records used by the practitioner where the allegedly non-received non-final Office action would have been entered had it been received (Attachments B, C, and D).

However, Petitioner has not provided a copy of the **master docket**, or stated that no such master docket exists and submitted other forms of evidence referenced in MPEP § 711.03(c), other than the individual docket record for this application.[3]

If reconsideration of this decision is desired, any response to this decision must be submitted within **TWO MONTHS** from the mail date of this decision. Extensions of time under 37 C.F.R. § 1.136(a) are permitted. The reply should include a cover letter entitled "Second Renewed Petition pursuant to 37 C.F.R. § 1.137(a)." This is not a final agency action within the meaning of 5 U.S.C § 704.

Any submission in response to this decision should indicate in a prominent manner that the attorney handling this matter is Paul Shanoski, and may be submitted by mail,[4] hand-delivery,[5] or facsimile.[6] Registered users of EFS-Web may alternatively submit a response to this decision via EFS-Web.[7]

If responding by mail, Petitioner is advised not to place the undersigned's name on the envelope. Only the information that appears in the footnote should be included - adding anything else to the address will delay the delivery of the response to the undersigned.

---

3 "A copy of the practitioner's record(s) required to show non-receipt of the Office action should include the master docket for the firm. That is, if a three month period for reply was set in the nonreceived Office action, a copy of the master docket report showing all replies docketed for a date three months from the mail date of the nonreceived Office action must be submitted as documentary proof of nonreceipt of the Office action. If no such master docket exists, the practitioner should so state and provide other evidence such as, but not limited to, the following: the application file jacket; incoming mail log; calendar; reminder system; or the individual docket record for the application in question."

4 Mail Stop Petition, Commissioner for Patents, United States Patent and Trademark Office, P.O. Box 1450, Alexandria, VA, 22313-1450.

5 Customer Window, Randolph Building, 401 Dulaney Street, Alexandria, VA, 22314.

6 (571) 273-8300- please note this is a central facsimile number.

7 https://sportal.uspto.gov/authenticate/authenticateuserlocalepf.html

Telephone inquiries regarding *this decision* should be directed to Senior Attorney Paul Shanoski at (571) 272-3225.[8] All other inquiries concerning examination procedures should be directed to the Technology Center.

/Paul Shanoski/
Paul Shanoski
Senior Attorney
Office of Petitions

8 Petitioner will note that all practice before the Office should be in writing, and the action of the Office will be based exclusively on the written record in the Office. See 37 C.F.R. § 1.2. As such, Petitioner is reminded that no telephone discussion may be controlling or considered authority for any further action(s) of Petitioner.

UNITED STATES PATENT AND TRADEMARK OFFICE

Commissioner for Patents
United States Patent and Trademark Office
P.O. Box 1450
Alexandria, VA 22313-1450
www.uspto.gov

Paper No.

MAILED

JUN 14 2010

OFFICE OF PETITIONS

FORD GLOBAL TECHNOLOGIES, LLC
FAIRLANE PLAZA SOUTH, SUITE 800
330 TOWN CENTER DRIVE
DEARBORN MI 48126

In re Application of :
Kaoud et al. :
Application No. 29/248,115 : DECISION ON SECOND RENEWED
Filed: July 28, 2006 : PETITION PURSUANT TO
Attorney Docket No.: 81145787 : 37 C.F.R. § 1.137(a)
Title: VEHICLE GRILLE :

This is a decision on the second renewed petition pursuant to 37 C.F.R. § 1.137(a), filed on April 13, 2010.

This second renewed petition pursuant to 37 C.F.R. § 1.137(a) is **GRANTED**.

The above-identified application became abandoned for failure to submit the issue fee in a timely manner in reply to the Notice of Allowance and Issue Fee Due, mailed July 31, 2007, which set a shortened statutory period for reply of three months. No extensions of time are permitted for transmitting issue fees.[1] Accordingly, the above-identified application became abandoned on November 1, 2007. A Notice of Abandonment was mailed on November 28, 2007.

Procedural History and Analysis

A grantable petition pursuant to 37 C.F.R. § 1.137(a) must be accompanied by:

(1) The reply required to the outstanding Office action or notice, unless previously filed;
(2) The petition fee as set forth in 37 C.F.R. § 1.17(l);
(3) A showing to the Commissioner that the entire

1 See MPEP § 710.02(e)(III).

delay in filing the required reply from the due date for the reply until the filing of a grantable petition was unavoidable, and;

(4) Any terminal disclaimer (and fee as set forth in 37 C.F.R. § 1.20(d)) required pursuant to paragraph (d) of this section.

An original petition pursuant to 37 C.F.R. § 1.137(a) was filed on December 14, 2007, along with the issue fee and a statement of facts. The original petition was dismissed via the mailing of a decision on January 15, 2010, which indicated that requirements (1) and (2) of Rule 1.137(a) had been satisfied.

A renewed petition pursuant to 37 C.F.R. § 1.137(a) was filed on February 17, 2010, and was dismissed via the mailing of a decision on March 29, 2010, which indicated that the fourth requirement of Rule 1.137(a) had been satisfied.

Regarding the third requirement of Rule 1.137(a), the decision on the renewed petition indicated that a copy of the master docket was not provided, and Petitioner had not stated that no such master docket exists and submitted other forms of evidence, other than the individual docket record for this application.[2]

With this second renewed petition, Petitioner has confirmed that he receives all relevant reports from Ms. Burmeister.[3] Petitioner has further indicated that no master docket exists[4] and submitted a screen shot of the contents of the electronic folder that is associated with this application,[5] as well as a listing of all files containing a notice of allowance during the relevant time period.[6]

It follows that the third requirement of Rule 1.137(a) has been satisfied.

Conclusion

It is noted that the issue fee was received on December 14, 2007.

---

2 Decision on renewed petition, page 3.
3 Second renewed petition, page 1.
4 Second renewed petition, pages 1-2.
5 Exhibit A, submitted concurrently with this second renewed petition.
6 Exhibit B, submitted concurrently with this second renewed petition.

Pursuant to this decision, the Office of Patent Publication will be notified of this decision so that the present application can be processed into a patent.

Petitioner may find it beneficial to view Private PAIR within a fortnight of the present decision to ensure that the revival has been acknowledged by the Office of Patent Publication in response to this decision. It is noted that all inquiries with regard to any failure of that change in status should be directed to the Office of Patent Publication where that change of status must be effected - **the Office of Petitions cannot effectuate a change of status.**

Telephone inquiries regarding *this decision* should be directed to the undersigned at (571) 272-3225.[7] All other inquiries concerning the status of the application should be directed to the Office of Patent Publication at 571-272-4200.

/Paul Shanoski/
Paul Shanoski
Senior Attorney
Office of Petitions

7 Petitioner will note that all practice before the Office should be in writing, and the action of the Office will be based exclusively on the written record in the Office. See 37 C.F.R. § 1.2. As such, Petitioner is reminded that no telephone discussion may be controlling or considered authority for any further action(s) of Petitioner.

UNITED STATES PATENT AND TRADEMARK OFFICE

COMMISSIONER FOR PATENTS
UNITED STATES PATENT AND TRADEMARK OFFICE
P.O. BOX 1450
ALEXANDRIA, VA 22313-1450
www.uspto.gov

FORD GLOBAL TECHNOLOGIES, LLC
FAIRLANE PLAZA SOUTH, SUITE 800
330 TOWN CENTER DRIVE
DEARBORN MI 48126

MAILED

JUN 15 2010

OFFICE OF PETITIONS

In re Application of :
Kaoud, et al. :
Application No. 29/248,121 : ON PETITION
Filed: July 28, 2006 :
Attorney Docket No.: 81145842 :

This is a decision on the petition under the unintentional provisions of 37 CFR 1.137(b), filed April 27, 2010, to revive the above-identified application.

The application became abandoned March 30, 2010 for failure to timely submit a proper reply to the Notice of Allowance and Issue Fee Due (Notice) mailed December 29, 2009. The Notice set a set a three month statutory period of time for reply. Notice of Abandonment was mailed April 15, 2010.

A grantable petition under 37 CFR 1.137(b) must be accompanied by: (1) the required reply, unless previously filed; (2) the petition fee as set forth in 37 CFR 1.17(m); (3) a statement that the entire delay in filing the required reply from the due date for the reply until the filing of a grantable petition pursuant to 37 CFR 1.137(b) was unintentional; and (4) any terminal disclaimer (and fee as set forth in 37 CFR 1.20(d)) required by 37 CFR 1.137(d). Where there is a question as to whether either the abandonment or the delay in filing a petition under 37 CFR 1.137 was unintentional, the Director may require additional information. *See* MPEP 711.03(c)(II)(C) and (D).

The instant petition has been carefully reviewed and found in compliance with the requirements set forth above.

Accordingly, the petition is hereby **GRANTED**.

This application is being directed to the Office of Data Management for further processing.

Telephone inquiries concerning this decision should be directed to the undersigned at (571) 272-3205.

/ALESIA M. BROWN/

Alesia M. Brown
Petitions Attorney
Office of Petitions

UNITED STATES PATENT
AND TRADEMARK OFFICE

Commissioner for Patents
United States Patent and Trademark Office
P.O. Box 1450
Alexandria, VA 22313-1450
www.uspto.g

Date Mailed: April 18, 2008
Patent No. :D556261 S
Ser. No. :29248138
Inventor(s) James E. Nash, et al.
Issued : Nov. 27, 2007
Title: OPEN TOP DISPENSER FOR NOTES

Re: Request for Certificate of Correction

Consideration has been given your request for the issuance of a certificate of correction for the above-identified patent under the provisions of Rule(s) 1.322 and/or 1.323.

Assignees' names and addresses (assignment data) printed in a patent, are based *solely* on information supplied in the appropriate space for identifying the assignment data, i.e., item 3 of the Issue Fee Transmittal Form PTOL-85B. Granting of a request under 37 CFR 3.81(b) is required to correct applicant's error providing ***incorrect or erroneous*** assignment data, *before* issuance of a Certificate of Correction, under 37 CFR 1.323 *(see Manual of Patent Examining Procedures (M.P.E.P) Chp.1400, sect. 1481).* This procedure is required *at any time after the issue fee is paid*, including after issuance of the patent.

In view of the foregoing, your request in this matter is hereby denied.

A request to correct the Assignee under 37 CFR 3.81(b) should include:

A. **the processing fee set forth in 37 CFR 1.117(h) (currently $130);**
B. a statement that the failure to include the correct assignee name on the PTOL-85B was inadvertent; and
C. a copy of the Notice of Recordation of Assignment Document, reflecting the reel and frame number where the assignment(s) is recorded and/or reflecting proof of *the date* the assignment was submitted for recordation.

In the Request, Applicant(s) may request that the file be forwarded to Certificates of Correction Branch, for issuance of a Certificate of Correction, if the Request is granted.

Any request under 37 CFR 3.81(b) should be directed to the following address or facsimile number:

By mail: Mail Stop PETITIONS
Commissioner for Patents
Post Office Box 1450
Alexandria, VA 22313-1450

By hand: Customer Service Window
Mail Stop Petitions
Randolph Building
401 Dulany Street
Alexandria, VA 22314

By fax: (571) 273-0025
ATTN: Office of Petitions

If a fee (currently $100) was previously submitted for consideration of a Request for Certificate of Correction, under CFR 1.323, to correct assignment data, no additional fee is required.

Magdalene Talley
For Mary F. Diggs, Supervisor
Decisions & Certificates
of Correction Branch
(703) 308-9390 ext. 116

Office of Intellectual Property Counsel
3M Innovative Property Company
3M Center –P.O. Box 33427
Saint Paul, MN 55133-3427

MD/mt

UNITED STATES PATENT AND TRADEMARK OFFICE

Commissioner for Patents
United States Patent and Trademark Office
P.O. Box 1450
Alexandria, VA 22313-1450
www.uspto.gov

4/18/08

Patent No. :D556261
Ser. No. : 29/248138
Inventor(s) :Nash, James E.
Issued : 11/27/07
Title : OPEN TOP DISPENSER FOR NOTES
Docket No. :

Re: Request for Certificate of Correction

Consideration has been given your request for the issuance of a certificate of correction for the above-identified patent under the provisions of Rule(s) 1.322 and/or 1.323.

Assignees' names and addresses (assignment data) printed in a patent, are based *solely* on information supplied in the appropriate space for identifying the assignment data, i.e., item 3 of the Issue Fee Transmittal Form PTOL-85B. Granting of a request under 37 CFR 3.81(b) is required to correct applicant's error providing ***incorrect or erroneous*** assignment data, *before* issuance of a Certificate of Correction, under 37 CFR 1.323 *(see Manual of Patent Examining Procedures (M.P.E.P) Chp.1400, sect. 1481).* This procedure is required *at any time after the issue fee is paid*, including after issuance of the patent.

In view of the foregoing, your request, in this mater, is hereby denied.

A request to correct the Assignee under 37 CFR 3.81(b) should include:

A. **the processing fee set forth in 37 CFR 1.117(h) (currently $130);**
B. a statement that the failure to include the correct assignee name on the PTOL-85B was inadvertent; and
C. a copy of the Notice of Recordation of Assignment Document, reflecting the reel and frame number where the assignment(s) is recorded and/or reflecting proof of *the date* the assignment was submitted for recordation.

In the Request, Applicant(s) may request that the file be forwarded to Certificates of Correction Branch, for issuance of a Certificate of Correction, if the Request is granted.

Any request under 37 CFR 3.81(b) should be directed to the following address or facsimile number:

By mail: Mail Stop PETITIONS
Commissioner for Patents
Post Office Box 1450
Alexandria, VA 22313-1450

By hand: Customer Service Window
Mail Stop Petitions
Randolph Building
401 Dulany Street
Alexandria, VA 22314

By fax: (703) 872-9306
ATTN: Office of Petitions

If a fee (currently $100) was previously submitted for consideration of a Request for Certificate of Correction, under CFR 1.323, to correct assignment data, , no additional fee is required.

A certificate of correction will be issued to correct the remaining errors noted in your request.

Henry Randall
For Cecelia Newman
Decisions & Certificates
of Correction Branch
(703) 308-9390 Ext. 108

OFFICE OF INTELLECTUAL PROPERTY COUNSEL
3M INNOVATIVE PROPERTIES COMPANY
3M CENTER –P.O. BOX 33427
SAINT PAUL, MINNESOTA 55133-3427

HR

UNITED STATES PATENT AND TRADEMARK OFFICE

Commissioner for Patents
United States Patent and Trademark Office
P.O. Box 1450
Alexandria, VA 22313-1450
www.uspto.gov

Andrew N. Parfomak
Norris, McLaughlin & Marcus, P.A.
875 Third Avenue
18th Floor
New York NY 10022

COPY MAILED

MAR 0 5 2007

OFFICE OF PETITIONS

In re Application of :
Cheung, et al. :
Application No. 29/248,171 :
Filed: July 17, 2006 :
Attorney Docket No. 102792-620 :
For: A LAVATORY DEVICE

LETTER

This letter is mailed in response to the petition under 37 CFR 1.47(a) filed on November 17, 2006.

The petition is **GRANTED**.

In accordance with 37 CFR 1.63(d), petitioners have submitted a copy of the executed oath or declaration filed in Application No. 29/222,613, of which the instant filing is a continuation application. Furthermore, petitioners have submitted a copy of the decision, mailed on October 18, 2005, granting a petition to accord § 1.47 status to the prior application.

The above-identified application and papers have been reviewed and found in compliance with 37 CFR 1.47(a). This application is hereby accorded Rule 1.47(a) status. No fee has been or will be charged.

The Office will not forward notice of this application's filing to the non-signing inventor because notice regarding the filing of the prior application has already been sent to the non-signing inventor.

After this decision is mailed, the application will be returned to the Office of Initial Patent Examination for further processing.

Telephone inquiries should be directed to the undersigned at (571) 272-3230.

Shirene Willis Brantley

Shirene Willis Brantley
Senior Petitions Attorney
Office of Petitions
Office of the Deputy Commissioner
for Patent Examination Policy

UNITED STATES PATENT AND TRADEMARK OFFICE

Commissioner for Patents
United States Patent and Trademark Office
P.O. Box 1450
Alexandria, VA 22313-1450
www.uspto.gov

NORRIS, MCLAUGHLIN & MARCUS
875 THIRD AVE
18TH FLOOR
NEW YORK NY 10022

COPY MAILED

NOV 23 2007

OFFICE OF PETITIONS

In re Application of :
Cheung, et al. :
Application No. 29/248,171 : ON PETITION
Deposited: August 1, 2006 :
Attorney Docket No. 102792-398(620) :

This is a decision on the petition entitled, "PETITION TO GRANT FILING DATE OF DESIGN APPLICATION," filed June 25, 2007, requesting that the above-identified application be accorded a filing date of August 1, 2006. The petition will be treated under 37 CFR 1.57(a) as a petition to add the specification, claims and abstract from Application No. 29/222,613.

The petition under 37 CFR 1.57(a) is **DISMISSED**.

Any reconsideration petition should be filed within two (2) months of the mail date of this decision on petition.

Regarding fees: Petitioners have paid $130.00 petition fee. A $400.00 petition fee is required. The balance due, or $270.00 will be charged to deposit account no. 14-1263. The one month extension of time fee is unnecessary and will be refunded to the same deposit account.

The application was deposited on August 1, 2006. A Notice of Incomplete Nonprovisional Application was mailed on March 23, 2007.

Petitioners filed the present petition in response on June 25, 2007. Petitioners state that a specification and a claim were inadvertently omitted from the application filed via EFS system on August 1, 2006. Applicants believed that they filed all necessary papers on August 1, 2006, but due to inexperience with they EFS system, the application was incomplete. Applicants submit there is no prejudice in granting the application an August 1, 2006 filing date because the Office was in possession of the specification, claim, and drawings in the parent application, since the present application is a continuation application.

Although petitioners have not explicitly requested consideration under 37 CFR 1.57(a), the present petition will be treated as a petition under 37 CFR 1.57(a) because petitioners are relying on the continuation application for accordation of an August 1, 2006 filing date to the present application.

The applicable rule provides (in pertinent part):

§ 1.57 Incorporation by reference.

(a) Subject to the conditions and requirements of this paragraph, if all or a portion of the specification or drawing(s) is inadvertently omitted from an application, but the application contains a claim under § 1.55 for priority of a prior-filed foreign application, or a claim under § 1.78 for the benefit of a prior-filed provisional, nonprovisional, or international application, that was present on the filing date of the application, and the inadvertently omitted portion of the specification or drawing(s) is completely contained in the prior-filed application, the claim under § 1.55 or § 1.78 shall also be considered an incorporation by reference of the prior-filed application as to the inadvertently omitted portion of the specification or drawing(s).

(1) The application must be amended to include the inadvertently omitted portion of the specification or drawing(s) within any time period set by the Office, but in no case later than the close of prosecution as defined by § 1.114(b), or abandonment of the application, whichever occurs earlier. The applicant is also required to:

(i) Supply a copy of the prior-filed application, except where the prior-filed application is an application filed under 35 U.S.C. 111;

(ii) Supply an English language translation of any prior-filed application that is in a language other than English; and

(iii) Identify where the inadvertently omitted portion of the specification or drawings can be found in the prior-filed application.

...

(3) If an application is not otherwise entitled to a filing date under § 1.53(b), the amendment must be by way of a petition pursuant to this paragraph accompanied by the fee set forth in § 1.17(f).

A review of the papers deposited on August 1, 2006 reveals that an ADS containing a claim for benefit of priority under 37 CFR 1.78 to Application No. 29/222,613 was filed.

A specification and a claim were inadvertently omitted from the above-identified application, but if the specification and claim are contained in prior-filed Application No. 29/222,613, and the above-identified application's ADS contains a claim for benefit of priority under 37 CFR 1.78 to Application No. 29/222,613, then petitioners are permitted to amend the above-identified application to include the missing material from Application No. 29/222,613 and thereby obtain an August 1, 2006 filing date for the above-identified application.

The petition under 37 CFR 1.57(a) is dismissed because petitioners did **not** file a formal amendment to add the specification and claim from Application No. 29/222,613 to the present application. Both an amendment adding the material and a petition are required under 37 CFR 1.57(a). MPEP 201.17 Incorporation by Reference under 37 CFR 1.57(a).

Further correspondence with respect to this matter should be addressed as follows:

By mail:
Mail Stop PETITION
Commissioner for Patents
Post Office Box 1450
Alexandria, VA 22313-1450

By hand:
U.S. Patent and Trademark Office
Customer Service Window, Mail Stop Petition
Randolph Building
401 Dulany Street
Alexandria, VA 22314

By FAX: (571) 273-8300 - ATTN: Office of Petitions

The application will be retained in the Office of Petitions until a reconsideration petition under 37 CFR 1.57(a)(3) and a formal amendment adding the specification and claim from Application No. 29/222,613 are filed. No additional petition fee is required.

Telephone inquiries concerning this matter may be directed to Petitions Attorney Shirene Willis Brantley at (571) 272-3230.

Charles Pearson
Director
Office of Petitions

UNITED STATES PATENT AND TRADEMARK OFFICE

Commissioner for Patents
United States Patent and Trademark Office
P.O. Box 1450
Alexandria, VA 22313-1450
www.uspto.gov

NORRIS, MCLAUGHLIN & MARCUS
875 THIRD AVE
18TH FLOOR
NEW YORK NY 10022

COPY MAILED

JUL 11 2008

In re Application of :
Cheung, et al. :
Application No. 29/248,171 : ON PETITION
Deposited: August 1, 2006 :
Attorney Docket No. 102792-398(620) :

This is a decision on the reconsideration petition under 37 CFR 1.57(a), filed January 23, 2008, requesting that the above-identified application be accorded a filing date of August 1, 2006 adding the specification and claim from Application No. 29/222,613.

The petition is **granted**.

The application was deposited on August 1, 2006. A Notice of Incomplete Nonprovisional Application was mailed on March 23, 2007. Applicants filed a constructive petition under 37 CFR 1.57(a) on June 25, 2007, requesting that the above-identified application be accorded a filing date of August 1, 2006. The petition was dismissed on November 23, 2007. The instant reconsideration petition was timely filed on January 23, 2008.

A review of the papers deposited on August 1, 2006 reveals that an ADS containing a claim for benefit of priority under 37 CFR 1.78 to Application No. 29/222,613 was filed.

A specification and a claim were inadvertently omitted from the present application. Petitioners request that the present application be amended to include the specification and claim contained in prior-filed Application No. 29/222,613 and thereby obtain an August 1, 2006 filing date for the present application.

The applicable rule provides (in pertinent part):

§ 1.57 Incorporation by reference.

(a) Subject to the conditions and requirements of this paragraph, if all or a portion of the specification or drawing(s) is inadvertently omitted from an application, but the application contains a claim under § 1.55 for priority of a prior-filed foreign application, or a claim under § 1.78 for the benefit of a prior-filed provisional, nonprovisional, or international application, that was present on the filing date of the application, and the inadvertently omitted portion of the specification or drawing(s) is completely contained in the prior-filed application, the claim under § 1.55 or § 1.78 shall also be considered an incorporation by reference of the prior-filed application as to the inadvertently omitted portion of the specification or drawing(s).

(1) The application must be amended to include the inadvertently omitted portion of the specification or drawing(s) within any time period set by the Office, but in no case later than the close of prosecution as defined by § 1.114(b), or abandonment of the application, whichever occurs earlier. The applicant is also required to:

(i) Supply a copy of the prior-filed application, except where the prior-filed application is an application filed under 35 U.S.C. 111;

(ii) Supply an English language translation of any prior-filed application that is in a language other than English; and

(iii) Identify where the inadvertently omitted portion of the specification or drawings can be found in the prior-filed application.

...

(3) If an application is not otherwise entitled to a filing date under § 1.53(b), the amendment must be by way of a petition pursuant to this paragraph accompanied by the fee set forth in § 1.17(f).

As stated previously, a review of the papers deposited on August 1, 2006 reveals that an ADS containing a claim for benefit of priority under 37 CFR 1.78 to Application No. 29/222,613 was filed. Thus, pursuant to 1.57, the application as filed is considered to have incorporated by reference the prior filed application as to the inadvertently omitted portion of the specification and claim.

The instant reconsideration petition includes an amendment adding the inadvertently omitted specification and claim.

In view of the incorporation by reference of the prior application, the specification and claim supplied on January 23, 2008, would not constitute new matter if it were a part of the original disclosure of the prior application. Of course, the examiner is expected to compare the specification and claim supplied on January 23, 2008, to the disclosure of prior application No. 29/222,613 in order to verify that it is an accurate copy of the prior specification and claim and that it contains no new matter.

In view thereof, the petition is **GRANTED**.

The application is being forwarded to the Office of Patent Application Processing (OPAP) for **according of a filing date of August 1, 2006**, as a continuation application under 37 CFR 1.53(b) of prior application No. 29/222,613, including the copy of the specification and claim from the prior application supplied on January 23, 2008. Applicants will receive appropriate notifications regarding the fees owed, if any, and other information in due course from OPAP.

Telephone inquiries concerning this matter may be directed to Petitions Attorney Shirene Willis Brantley at (571) 272-3230.

Anthony Knight
Supervisor
Office of Petitions

UNITED STATES PATENT AND TRADEMARK OFFICE

Commissioner for Patents
United States Patent and Trademark Office
P.O. Box 1450
Alexandria, VA 22313-1450
www.uspto.gov
DIW Dec-06

NIKOLAI & MERSEREAU, P.A.
900 SECOND AVENUE SOUTH
SUITE 820
MINNEAPOLIS MN 55402

COPY MAILED

DEC 21 2006

OFFICE OF PETITIONS

In re Application of :
Ritter Tsai : DECISION ON PETITION
Application No. 29/248,197 :
Filed: 2 August, 2006 :
For: **CFP-3501 (20060809.DES)** :

This is a decision on the "PETITION IN RESPONSE TO NOTICE TO FILE MISSING PARTS OF [NON]PROVISIONAL APPLICATION" filed on 25 August, 2006, which is treated as a petition under 37 CFR 1.181 to withdraw the Notice to File Missing Parts of Nonprovisional Application mailed in the above-identified application.

The petition is **DISMISEED**.

On 2 August, 2006, the above-identified application was filed.

On 23 August, 2006, a Notice to File Missing Parts of Nonprovisional Application was filed, stating that the oath or declaration was missing, and that an oath or declaration in compliance with 37 CFR 1.63 and a surcharge for its late filing were required.

In response, on 25 August, 2006, the present petition was filed, along with an executed declaration.

Petitioner asserts that an executed declaration was filed with the application papers deposited on 2 August, 2006, via the Electronic Filing System (EFS), and, therefore, the Notice mailed on 23 August, 2006, was mailed in error. In support, petitioner has provided a copy of an Acknowledgement Receipt showing submission of, inter alia, a file named oath or declaration, on 2 August, 2006.

A review of the official file reveals that the page indicated as the oath or declaration in the file is blank.

The showing of evidence has been considered, but is not persuasive. A review of Office electronic files reveals that the PDF documents submitted by applicant to EFS-Web on 2 August, 2006, were too large. EFS-Web generates a warning message when a customer uploads and validates a PDF document which is too large. The submission of the PDF document which was too large subsequently affected the processing of the oath, and caused it to be entered in IFW as blank. As such, the oath or declaration was not filed on 2 August, 2006, due to a filing error on the part of applicants, not the USPTO.

As such, the Notice mailed on 23 August, 2006, was properly mailed and will not be withdrawn. The petition is dismissed.

The declaration filed on 25 August, 2006, is timely filed in response to the Notice mailed on 23 August, 2006.

As applicant has authorized payment of any required fees, the late-filing fee or oath or declaration surcharge will be charged to counsel's deposit account.

The application is referred to the Office of Initial Patent Examination for further processing.

Telephone inquiries concerning this matter may be directed to the undersigned at (571)272-3231.

D Wood

Douglas I. Wood
Senior Petitions Attorney
Office of Petitions

UNITED STATES PATENT AND TRADEMARK OFFICE

Commissioner for Patents
United States Patent and Trademark Office
P.O. Box 1450
Alexandria, VA 22313-1450
www.uspto.gov

KAMRATH & ASSOCIATES, PA
4825 OLSON MEMORIAL HIGHWAY
SUITE 245
GOLDEN VALLEY, MN 55422

COPY MAILED

JUL 18 2008

In re Patent No. D555,399 :
Issue Date: November 20, 2007 :
Application No. 29/248,197 : ON PETITION
Filed: August 2, 2006 :
Attorney Docket No. CFP-3501(20060809) :

This is a decision on the petition filed January 2, 2008, which is being treated as a request under 37 CFR 3.81(b)[1] to correct the name of the assignee on the front page of the above-identified patent by way of a Certificate of Correction.

The request is **GRANTED**.

Telephone inquiries concerning this decision may be directed to the April Wise at (571) 272-1642. Inquiries regarding the issuance of a certificate of correction should be directed to the Certificate of Correction Branch at (571) 272-4200.

The Certificates of Correction Branch will be notified of this decision granting the petition under 37 CFR 3.81(b) and directing issuance of the requested Certificate of Correction.

Carl Friedman
Petitions Examiner
Office of Petitions

[1] *See* MPEP 1309, subsection II; and Official Gazette of June 22, 2004.

UNITED STATES PATENT AND TRADEMARK OFFICE

Commissioner for Patents
United States Patent and Trademark Office
P.O. Box 1450
Alexandria, VA 22313-1450
www.uspto.gov

COPY MAILED

MAY 0 9 2008

OFFICE OF PETITIONS

BLACK LOWE & GRAHAM, PLLC
701 FIFTH AVENUE
SUITE 4800
SEATTLE, WA 98104

In re Application of
Jack Y. Weisbly
Application No. 29/248,224
Filed: August 3, 2006
Attorney Docket No. CSCO-1-1003

ON PETITION

This is a decision on the petition under 37 CFR 1.137(b), filed October 24, 2007, to revive the above-identified application.

The petition is **GRANTED**.

A review of the record shows that a Notice of Allowance and Fee(s) Due was mailed on June 14, 2007. On September 5, 2007, an improper Request for Continued Examination (RCE) under 37 CFR 1.114 was filed. On September 15, 2007, the application became abandoned for a failure to pay the issue fee. This decision precedes the mailing of a Notice of Abandonment.

On October 24, 2007, the present petition was filed, including, *inter alia*, a Terminal Disclaimer and Request for a Continued Prosecution Application (CPA). However, in an application or patent, abandoned or lapsed for failure to pay the issue fee or any portion thereof, the required reply under 37 CFR 1.137(b) must be the payment of the issue fee or any outstanding balance thereof.

Under the circumstances of this case, the issue fee payment of $820 is being charged to counsel's deposit account and the $790 filing fees paid for the improper RCE on September 5, 2007 will be credited to counsel's deposit account as authorized.

The petition satisfies the requirements of 37 CFR 1.137(b) in that petitioner has supplied (1) the reply in the form of the $820 issue fee, (2) the petition fee of $1,540, (3) an adequate statement of unintentional delay, and (4) a terminal disclaimer and fee as required by 37 CFR 1.137(d). Accordingly, the failure to timely pay the issue fee as required by the Notice of June 14, 2007 is accepted as being unintentionally delayed.

Petitioner is reminded that the issue fee paid on October 24, 2007 in the parent application is not refundable nor can it be applied towards the new Notice of Allowance resulting from the CPA filed October 24, 2007.

The terminal disclaimer filed October 24, 2007 has been accepted and made of record. Any continuing application filed from this application must contain a copy of the terminal disclaimer. The copy of the terminal disclaimer must be filed with a cover letter requesting the terminal disclaimer be recorded on the continuing application. A copy of this decision should be attached to the cover letter.

In view of this decision, the application is being returned to Technology Center 2912 for further processing of the CPA filed on October 24, 2007.

Telephone inquiries regarding this decision should be directed to the undersigned at (571) 272-3204.

Sherry D. Brinkley
Petitions Examiner
Office of Petitions

UNITED STATES PATENT AND TRADEMARK OFFICE

Commissioner for Patents
United States Patent and Trademark Office
P.O. Box 1450
Alexandria, VA 22313-1450
www.uspto.gov

COPY MAILED

MAY 23 2008

OFFICE OF PETITIONS

DOUGLAS T. JOHNSON
MILLER & MARTIN
1000 VOLUNTEER BUILDING
832 GEORGIA AVENUE
CHATTANOOGA, TN 37402-2289

In re Application of

Joseph B. Pagliaro : ON PETITION

Application No. 29/248,309 :

Filing Date: August 9, 2006 :

Attorney Docket No. JDC5034USDP

This is a decision on the petition under 37 CFR §1.137(b), filed April 14, 2008, in the above-identified application.

The petition is **dismissed**.

Any request for reconsideration of this decision must be submitted within TWO (2) MONTHS from the mail date of this decision. Extensions of time under 37 CFR 1.136(a) are permitted. The reconsideration request should include a cover letter entitled "Renewed Petition" under 37 CFR 1.137(b)."

This application became abandoned for failure to respond in a timely manner to the non-final Office action mailed May 31, 2007. The notice allowed a shortened statutory period for reply of three months from its mailing date. No reply was received within the allowable period, and the application became abandoned on September 1, 2007. A Notice of Abandonment was mailed January 11, 2008.

Effective December 1, 1997, the provisions of 37 CFR 1.137(b) now provide that where the delay in reply was unintentional, a petition may be filed to revive an abandoned application or a lapsed patent pursuant to 37 CFR 1.137(b). A grantable petition pursuant to 37 CFR 1.137(b) must be accompanied by:

(1) the required reply, unless previously filed. In a non-provisional application abandoned for failure to prosecute, the required reply may be met by the filing of a continuing application. In an application or patent, abandoned or lapsed for failure to pay the issue fee, or any portion thereof, the required reply must be the payment of the issue fee or any outstanding balance thereof.

(2) the petition fee as set forth in 37 CFR 1.17(m);

(3) a statement that the entire delay in filing the required reply from the due date for the reply until the filing of a grantable petition pursuant to 37 CFR 1.137(b) was unintentional. The Commissioner may require additional information where there is a question whether the delay was unintentional; and

(4) any terminal disclaimer (and fee set forth in 37 CFR 1.20(d)) required pursuant to 37 CFR 1.137(d).

The instant petition does not satisfy the requirements of item (4) above.

As to item (4), the terminal disclaimer was not found with the petition papers. The subject application is a design application, therefore; a terminal disclaimer is required in order to revive the application. Any renewed petition filed must be accompanied by the completed terminal disclaimer form, which is enclosed for petitioner's convenience. Pursuant to 37 CFR 1.137(d), the terminal disclaimer must dedicate to the public a terminal part of the term of any patent granted from this application that is equivalent to the period of abandonment of the application.

The Revocation of Power of Attorney and New Correspondence Address, filed April 14, 2008, is noted and made of record.

Further correspondence with respect to this matter should be addressed as follows:

By mail: Mail Stop Petitions
Commissioner for Patents
United States Patent and Trademark Office
Box 1450
Alexandria, VA 22313-1450

By facsimile: (571) 273-8300

Telephone inquiries concerning this matter may be directed to the undersigned at (571) 272-3222.

Kenya A. McLaughlin
Petitions Attorney
Office of Petitions

Enclosure: "Terminal Disclaimer to Accompany Petition"

PTO/SB/63 (01-08)
Approved for use through 05/31/2008. OMB 0651-0031
U.S. Patent and Trademark Office; U.S. DEPARTMENT OF COMMERCE
Under the Paperwork Reduction Act of 1995, no persons are required to a collection of information unless it displays a valid OMB control number.

TERMINAL DISCLAIMER TO ACCOMPANY PETITION	Docket Number (Optional)

In re Application of:

Name:

Application Number:

Filed:

For:

The owner*, _____ of _____ percent interest in the above-identified application hereby disclaims a terminal part of the term of any patent granted the above-identified application equivalent to: (1) if the above-identified application is a design application, the period of abandonment of the above-identified application, and (2) if the above-identified application is a utility or plant application, the lesser of: (a) the period of abandonment of the application; or (b) the period extending beyond twenty years from the date on which the above-identified application was filed in the United States or, if the application contains a specific reference to an earlier filed application(s) under 35 U.S.C. 120, 121, or 365(c), from the date on which the earliest such application was filed. This disclaimer also applies to any patent granted on a utility or plant application filed before June 8, 1995, or a design application, that contains a specific reference under 35 U.S.C. 120, 121, or 365(c) to the above-identified application. This disclaimer is binding upon the grantee, and its successors or assigns.

Check either box 1 or 2 below, if appropriate.

1. ☐ For submissions on behalf of an organization (e.g., corporation, partnership, university, government agency, etc.), the undersigned is empowered to act on behalf of the organization.
2. ☐ The undersigned is an attorney or agent of record. Registration Number_____.

_____ _____
Signature Date

_____ _____
Typed or Printed Name Telephone Number

☐ Terminal disclaimer fee under 37 CFR 1.20(d) included.

WARNING: Information on this form may become public. Credit card information should not be included on this form. Provide credit card information and authorization on PTO-2038.

* Statement under 37 CFR 3.73(b) is required if terminal disclaimer is signed by the assignee (owner). Form PTO/SB/96 may be used for making this certification. See MPEP § 324.

This collection of information is required by 37 CFR 1.137. The information is required to obtain or retain a benefit by the public which is to file (and by the USPTO to process) an application. Confidentiality is governed by 35 U.S.C. 122 and 37 CFR 1.11 and 1.14. This collection is estimated to take 12 minutes to complete, including gathering, preparing, and submitting the completed application form to the USPTO. Time will vary depending upon the individual case. Any comments on the amount of time you require to complete this form and/or suggestions for reducing this burden, should be sent to the Chief Information Officer, U.S. Patent and Trademark Office, U.S. Department of Commerce, P.O. Box 1450, Alexandria, VA 22313-1450. DO NOT SEND FEES OR COMPLETED FORMS TO THIS ADDRESS. **SEND TO: Commissioner for Patents, P.O. Box 1450, Alexandria, VA 22313-1450.**

If you need assistance in completing the form, call 1-800-PTO-9199 and select option 2.

Privacy Act Statement

The **Privacy Act of 1974 (P.L. 93-579)** requires that you be given certain information in connection with your submission of the attached form related to a patent application or patent. Accordingly, pursuant to the requirements of the Act, please be advised that: (1) the general authority for the collection of this information is 35 U.S.C. 2(b)(2); (2) furnishing of the information solicited is voluntary; and (3) the principal purpose for which the information is used by the U.S. Patent and Trademark Office is to process and/or examine your submission related to a patent application or patent. If you do not furnish the requested information, the U.S. Patent and Trademark Office may not be able to process and/or examine your submission, which may result in termination of proceedings or abandonment of the application or expiration of the patent.

The information provided by you in this form will be subject to the following routine uses:

1. The information on this form will be treated confidentially to the extent allowed under the Freedom of Information Act (5 U.S.C. 552) and the Privacy Act (5 U.S.C 552a). Records from this system of records may be disclosed to the Department of Justice to determine whether disclosure of these records is required by the Freedom of Information Act.
2. A record from this system of records may be disclosed, as a routine use, in the course of presenting evidence to a court, magistrate, or administrative tribunal, including disclosures to opposing counsel in the course of settlement negotiations.
3. A record in this system of records may be disclosed, as a routine use, to a Member of Congress submitting a request involving an individual, to whom the record pertains, when the individual has requested assistance from the Member with respect to the subject matter of the record.
4. A record in this system of records may be disclosed, as a routine use, to a contractor of the Agency having need for the information in order to perform a contract. Recipients of information shall be required to comply with the requirements of the Privacy Act of 1974, as amended, pursuant to 5 U.S.C. 552a(m).
5. A record related to an International Application filed under the Patent Cooperation Treaty in this system of records may be disclosed, as a routine use, to the International Bureau of the World Intellectual Property Organization, pursuant to the Patent Cooperation Treaty.
6. A record in this system of records may be disclosed, as a routine use, to another federal agency for purposes of National Security review (35 U.S.C. 181) and for review pursuant to the Atomic Energy Act (42 U.S.C. 218(c)).
7. A record from this system of records may be disclosed, as a routine use, to the Administrator, General Services, or his/her designee, during an inspection of records conducted by GSA as part of that agency's responsibility to recommend improvements in records management practices and programs, under authority of 44 U.S.C. 2904 and 2906. Such disclosure shall be made in accordance with the GSA regulations governing inspection of records for this purpose, and any other relevant (*i.e.*, GSA or Commerce) directive. Such disclosure shall not be used to make determinations about individuals.
8. A record from this system of records may be disclosed, as a routine use, to the public after either publication of the application pursuant to 35 U.S.C. 122(b) or issuance of a patent pursuant to 35 U.S.C. 151. Further, a record may be disclosed, subject to the limitations of 37 CFR 1.14, as a routine use, to the public if the record was filed in an application which became abandoned or in which the proceedings were terminated and which application is referenced by either a published application, an application open to public inspection or an issued patent.
9. A record from this system of records may be disclosed, as a routine use, to a Federal, State, or local law enforcement agency, if the USPTO becomes aware of a violation or potential violation of law or regulation.

UNITED STATES PATENT AND TRADEMARK OFFICE

Commissioner for Patents
United States Patent and Trademark Office
P.O. Box 1450
Alexandria, VA 22313-1450
www.uspto.gov

DOUGLAS T. JOHNSON
MILLER & MARTIN
1000 VOLUNTEER BUILDING
832 GEORGIA AVENUE
CHATTANOOGA, TN 37402-2289

COPY MAILED

JUN 23 2008

OFFICE OF PETITIONS

In re Application of :

Joseph B. Pagliaro : ON PETITION

Application No. 29/248,309 :

Filing Date: August 9, 2006 :

Attorney Docket No. JDC5034USDP

This is a decision on the renewed petition under 37 CFR 1.137(b), filed May 29, 2008.

The renewed petition is **GRANTED**.

This application became abandoned for failure to respond in a timely manner to the non-final Office action mailed May 31, 2007. The notice allowed a shortened statutory period for reply of three months from its mailing date. No reply was received within the allowable period, and the application became abandoned on September 1, 2007. A Notice of Abandonment was mailed January 11, 2008.

The amendment filed April 14, 2008, is noted. The terminal disclaimer filed May 29, 2008, is also noted.

37 CFR 1.137(b)(3) requires a statement that the entire delay in filing the required reply from the due date for the reply until the filing of a grantable petition pursuant to 37 CFR 1.137(b) was unintentional. If the statement contained in the instant petition varies from the language required by 37 CFR 1.137(b)(3), the statement contained in the instant petition is being construed as the statement required by 37 CFR 1.137(b)(3) and petitioner must notify the Office if this is not a correct interpretation of the statement contained in the instant petition.

The application is being forwarded to Technology Center 2900, GAU 2912 for further processing.

Telephone inquiries concerning this decision should be directed to the undersigned at (571) 272-3222.

Kenya A. McLaughlin
Petitions Attorney
Office of Petitions

UNITED STATES PATENT AND TRADEMARK OFFICE

Commissioner for Patents
United States Patent and Trademark Office
P.O. Box 1450
Alexandria, VA 22313-1450
www.uspto.gov

WORKMAN NYDEGGER
60 EAST SOUTH TEMPLE
1000 EAGLE GATE TOWER
SALT LAKE CITY UT 84111

COPY MAILED
OCT 11 2007
OFFICE OF PETITIONS

In re Application of :
Alex John Whitney :
Application No. 29/248321 : NOTICE
Filed: 08/09/2006 :
Attorney Docket No. 14684.75 :

This is a notice regarding your request for acceptance of a fee deficiency submission under 37 CFR 1.28, filed on 29 August, 2007.

The Office no longer investigates or rejects original or reissue applications under 37 CFR 1.56. **1098 Off. Gaz. Pat. Office 502 (January 3, 1989)**. Therefore, nothing in this Notice is intended to imply that an investigation was done.

Your fee deficiency submission under 37 CFR 1.28 is hereby **ACCEPTED**.

This application is no longer entitled to small entity status. Accordingly, all future fees paid in this application must be paid at the large entity rate.

Inquiries related to this communication should be directed to the undersigned at (571) 272-3231.

D Wood

Douglas I. Wood
Attorney
Office of Petitions

UNITED STATES PATENT AND TRADEMARK OFFICE

Commissioner for Patents
United States Patent and Trademark Office
P.O. Box 1450
Alexandria, VA 22313-1450
www.uspto.gov

GREGORY SMITH & ASSOCIATES
3900 NEWPARK MALL ROAD, 3RD FLOOR
NEWARK CA 94560

COPY MAILED
DEC 10 2008

In re Application of :
Foroogh Taherirastgar :
Application No. 29/248,342 : DECISION ON PETITION
Filed: August 10, 2006 :
Attorney Docket No. 265-002DS :

This is a decision on the petition under the unintentional provisions of 37 CFR 1.137(b), filed November 7, 2008, to revive the above-identified application.

The petition under 37 CFR 1.137(b) is **GRANTED**.

The application became abandoned for failure to submit a substitute Oath or Declaration in a timely manner in reply to the Supplemental Notice of Allowability mailed April 25, 2008, which set a period for reply of three (3) months. Accordingly, this application became abandoned on July 26, 2008. A Notice of Abandonment was mailed August 21, 2008.

The petition satisfies the requirements of 37 CFR 1.137(b) in that petitioner has supplied (1) the reply in the form of a substitute Oath/Declaration; (2) the petition fee of $810.00; (3) a proper statement of unintentional delay; and (4) a Terminal Disclaimer and fee of $70.00.

Telephone inquiries concerning this decision should be directed to Joan Olszewski at (571) 272-7751.

This application is being referred to the Office of Data Management for processing into a patent.

/Liana Walsh/
Liana Walsh
Petitions Examiner
Office of Petitions

PTO/SB/27 (09-04)
Approved for use through 07/31/2006. OMB 0651-0031
U.S. Patent and Trademark Office; U.S DEPARTMENT OF COMMERCE
Under the Paperwork Reduction ACT of 1995, no persons are required to respond to collection of information unless it displays a valid OMB control number.

REQUEST FOR EXPEDITED EXAMINATION OF A DESIGN APPLICATION (37 CFR 1.155)

Application Number	*To Be Assigned* 29/248,418
Filing Date	Herewith (August 15, 2006)
First Named Inventor	Charles M. COUSHAINE
Title	Portable Lamp
Atty Docket Number	2326.0120001/MWR/BKB

ADDRESS TO:

MAIL STOP EXPEDITED DESIGN
COMMISSIONER FOR PATENTS
P.O. Box 1450
Alexandria, VA 22313-1450

This is a request for expedited examination of a design application under 37 CFR 1.155.

NOTE: If the Request made by this form accompanies original application papers, include form PTO/SB/18 "Design Patent Application Transmittal" or its equivalent.

A preexamination search was conducted. The field of search was:

U.S. patents in Class D26, subclasses: 24, 51, 72, 74, 80, 93, 118, 120, and 124; and U.S. patents in Class 362, subclasses: 640, 652, 653 and 362, as of July 5, 2006.

Related applications: 29/235,674

If not previously filed for the above-identified application, the following items required by 37 CFR 1.155 are enclosed:

- Formal drawings (see 37 CFR 1.84).
- The fee set forth in 37 CFR 1.17(k).
- An information disclosure statement in compliance with 37 CFR 1.98.

9-1-06
Approved
Jacqueline M. Stone
Jacqueline M. Stone, Director
Technology Center 1700/2900

Mark W. Rygiel
Signature

August 15, 2006
Date

Mark W. Rygiel
Typed or printed name

45,871
Registration Number, if applicable

(202) 371-2600
Telephone Number

WARNING: Information on this form may become public. Credit card information should not be included on this form. Provide credit card information and authorization on PTO-2038.

This collection of information is required by 37 CFR 1.155. The information is required to obtain or retain a benefit by the public which is to file (and by the USPTO to process) an application. Confidentiality is governed by 35 U.S.C. 122 and 37 CFR 1.11 and 1.14. This collection is estimated to take 6 minutes to complete, including gathering, preparing, and submitting the completed application form to the USPTO. Time will vary depending upon the individual case. Any comments on the amount of time you require to complete this form and/or suggestions for reducing this burden, should be sent to the Chief Information Officer, U.S. Patent and Trademark Office, U.S. Department of Commerce, P.O. Box 1450, Alexandria, VA 22313-1450. DO NOT SEND FEES OR COMPLETED FORMS TO THIS ADDRESS. SEND TO: Commissioner for Patents, P.O. Box 1450, Alexandria, VA 22313-1450.

If you need assistance in completing the form, call 1-800-PTO-9199 and select option 2.

PTO/SB/27 (09-04)
Approved for use through 07/31/2006. OMB 0651-0031
U.S. Patent and Trademark Office; U.S DEPARTMENT OF COMMERCE
Under the Paperwork Reduction ACT of 1995, no persons are required to respond to collection of information unless it displays a valid OMB control number.

REQUEST FOR EXPEDITED EXAMINATION OF A DESIGN APPLICATION (37 CFR 1.155)

Application Number	*To Be Assigned* 29/248,421
Filing Date	Herewith (August 15, 2006)
First Named Inventor	Charles M. COUSHAINE
Title	Portable Lamp
Atty Docket Number	2326.0120002/MWR/BKB

ADDRESS TO:
MAIL STOP EXPEDITED DESIGN
COMMISSIONER FOR PATENTS
P.O. Box 1450
Alexandria, VA 22313-1450

This is a request for expedited examination of a design application under 37 CFR 1.155.

NOTE: If the Request made by this form accompanies original application papers, include form PTO/SB/18 "Design Patent Application Transmittal" or its equivalent.

A preexamination search was conducted. The field of search was:

U.S. patents in Class D26, subclasses: 24, 51, 72, 74, 80, 93, 118, 120, and 124; and U.S. patents in Class 362, subclasses: 640, 652, 653 and 362, as of July 5, 2006.

Related applications: 29/235,674

If not previously filed for the above-identified application, the following items required by 37 CFR 1.155 are enclosed:

- Formal drawings (see 37 CFR 1.84).
- The fee set forth in 37 CFR 1.17(k).
- An information disclosure statement in compliance with 37 CFR 1.98.

9-1-06
Approved
Jacqueline M. Stone
Jacqueline M. Stone, Director
Technology Center 1700/2900

Mark W. Rygiel
Signature

August 15, 2006
Date

Mark W. Rygiel
Typed or printed name

45,871
Registration Number, if applicable

(202) 371-2600
Telephone Number

WARNING: Information on this form may become public. Credit card information should not be included on this form. Provide credit card information and authorization on PTO-2038.

This collection of information is required by 37 CFR 1.155. The information is required to obtain or retain a benefit by the public which is to file (and by the USPTO to process) an application. Confidentiality is governed by 35 U.S.C. 122 and 37 CFR 1.11 and 1.14. This collection is estimated to take 6 minutes to complete, including gathering, preparing, and submitting the completed application form to the USPTO. Time will vary depending upon the individual case. Any comments on the amount of time you require to complete this form and/or suggestions for reducing this burden, should be sent to the Chief Information Officer, U.S. Patent and Trademark Office, U.S. Department of Commerce, P.O. Box 1450, Alexandria, VA 22313-1450. DO NOT SEND FEES OR COMPLETED FORMS TO THIS ADDRESS. SEND TO: **Commissioner for Patents, P.O. Box 1450, Alexandria, VA 22313-1450.**

If you need assistance in completing the form, call 1-800-PTO-9199 and select option 2.

563993.1

PTO/SB/27 (09-04)
Approved for use through 07/31/2006. OMB 0651-0031
U.S. Patent and Trademark Office; U.S DEPARTMENT OF COMMERCE
Under the Paperwork Reduction ACT of 1995, no persons are required to respond to collection of information unless it displays a valid OMB control number.

REQUEST FOR EXPEDITED EXAMINATION OF A DESIGN APPLICATION (37 CFR 1.155)

Application Number	*To Be Assigned* 29/248,424
Filing Date	Herewith (August 15, 2006)
First Named Inventor	Charles M. COUSHAINE
Title	Portable Lamp
Atty Docket Number	2326.0120003/MWR/BKB

ADDRESS TO:
MAIL STOP EXPEDITED DESIGN
COMMISSIONER FOR PATENTS
P.O. Box 1450
Alexandria, VA 22313-1450

This is a request for expedited examination of a design application under 37 CFR 1.155.

NOTE: If the Request made by this form accompanies original application papers, include form PTO/SB/18 "Design Patent Application Transmittal" or its equivalent.

A preexamination search was conducted. The field of search was:

U.S. patents in Class D26, subclasses: 24, 51, 72, 74, 80, 93, 118, 120, and 124; and U.S. patents in Class 362, subclasses: 640, 652, 653 and 362, as of July 5, 2006.

Related applications: 29/235,674

If not previously filed for the above-identified application, the following items required by 37 CFR 1.155 are enclosed:

- Formal drawings (see 37 CFR 1.84).
- The fee set forth in 37 CFR 1.17(k).
- An information disclosure statement in compliance with 37 CFR 1.98.

Approved 9-1-06
Jacqueline M. Stone
Jacqueline M. Stone, Director
Technology Center 1700/2900

Mark W. Rygiel
Signature

August 15, 2006
Date

Mark W. Rygiel
Typed or printed name

45,871
Registration Number, if applicable

(202) 371-2600
Telephone Number

WARNING: Information on this form may become public. Credit card information should not be included on this form. Provide credit card information and authorization on PTO-2038.

This collection of information is required by 37 CFR 1.155. The information is required to obtain or retain a benefit by the public which is to file (and by the USPTO to process) an application. Confidentiality is governed by 35 U.S.C. 122 and 37 CFR 1.11 and 1.14. This collection is estimated to take 6 minutes to complete, including gathering, preparing, and submitting the completed application form to the USPTO. Time will vary depending upon the individual case. Any comments on the amount of time you require to complete this form and/or suggestions for reducing this burden, should be sent to the Chief Information Officer, U.S. Patent and Trademark Office, U.S. Department of Commerce, P.O. Box 1450, Alexandria, VA 22313-1450. DO NOT SEND FEES OR COMPLETED FORMS TO THIS ADDRESS. SEND TO: **Commissioner for Patents, P.O. Box 1450, Alexandria, VA 22313-1450.**

If you need assistance in completing the form, call 1-800-PTO-9199 and select option 2.

UNITED STATES PATENT AND TRADEMARK OFFICE

Commissioner for Patents
United States Patent and Trademark Office
P.O. Box 1450
Alexandria, VA 22313-1450
www.uspto.gov

OSTROLENK FABER GERB & SOFFEN
1180 AVENUE OF THE AMERICAS
NEW YORK NY 10036-8403

COPY MAILED

JUL 14 2008

OFFICE OF PETITIONS

In re
Blum, et al.
Application No. 29/248,430
Filed: August 16, 2006
Patent No. D565,240
Issued: March 25, 2008
Attorney Docket No. D/3687-80

DECISION

This is a decision on the fee deficiency submission under 37 CFR 1.28(c), filed May 13, 2008.

The fee deficiency submission under 37 CFR 1.28 of $410, representing the difference between the small entity and large entity issue fee is hereby **accepted.**

The change of status to a large entity has been entered and made of record.

Telephone inquiries concerning this matter may be directed to the undersigned at (571) 272-3207.

Cliff Congo
Petitions Attorney
Office of Petitions

PTO/SB/27 (09-04)
Approved for use through 07/31/2006. OMB 0651-0031
U.S. Patent and Trademark Office; U.S. DEPARTMENT OF COMMERCE
Under the Paperwork Reduction Act of 1995, no persons are required to respond to a collection of information unless it displays a valid OMB control number.

REQUEST FOR EXPEDITED EXAMINATION OF A DESIGN APPLICATION (37 CFR 1.155)

Application Number	TBA 29/248,445
Filing Date	August 15, 2006
First Named Inventor	Charles Cummins
Title	Transitional Image For A Portion Of A Display Screen
Atty Docket Number	013797.02396

ADDRESS TO:
MAIL STOP EXPEDITED DESIGN
COMMISSIONER FOR PATENTS
P.O. Box 1450
Alexandria, VA 22313-1450

This is a request for expedited examination of a design application under 37 CFR 1.155.

NOTE: If the Request made by this form accompanies original application papers, include form PTO/SB/18 "Design Patent Application Transmittal" or its equivalent.

A preexamination search was conducted. The field of search was:

Class 345 (subclasses 683, 902); Class 715 (subclasses 764, 771, 773, 775, 776, 835, 836, 837, 838, 839, 846, 976); Class D14 (subclasses 485, 486, 487, 488, 489, 490, 491, 492, 493, 494, 495); Class D18 (subclasses 24, 25, 26, 27, 28, 29, 30, 31, 32, 33) Class D19 (subclasses 6, 7), Class D20 (subclasses 11, 18); Class D21 (subclasses 324, 325, 326, 327, 328, 329, 330, 331, 332, 333)

Related applications Attorney Docket Nos.:

If not previously filed for the above-identified application, the following items required by 37 CFR 1.155 are enclosed:
Formal drawings (see 37 CFR 1.84).
The fee set forth in 37 CFR 1.17(k).
An information disclosure statement in compliance with 37 CFR 1.98.

9-1-06
Approved
Jacqueline M. Stone
Jacqueline M. Stone, Director
Technology Center 1700/2900

/John M. Fleming/ — Signature
August 15, 2006 — Date
John M. Fleming — Typed or printed name
56,536 — Registration Number, If applicable
(202) 824-3000 — Telephone Number

WARNING: Information on this form may become public. Credit card information should not be included on this form. Provide credit card information and authorization on PTO-2038.

This collection of information is required by 37 CFR 1.155. The information is required to obtain or retain a benefit by the public which is to file (and by the USPTO to process) an application. Confidentiality is governed by 35 U.S.C. 122 and 37 CFR 1.11 and 1.14. This collection is estimated to take 6 minutes to complete, including gathering, preparing, and submitting the completed application form to the USPTO. Time will vary depending upon the individual case. Any comments on the amount of time you require to complete this form and/or suggestions for reducing this burden, should be sent to the Chief Information Officer, U.S. Patent and Trademark Office, U.S. Department of Commerce, P.O. Box 1450, Alexandria, VA 22313-1450. DO NOT SEND FEES OR COMPLETED FORMS TO THIS ADDRESS. **SEND TO: Mail Stop Expedited Design, Commissioner for Patents, P.O. Box 1450, Alexandria, VA 22313-1450.**
If you need assistance in completing the form, call 1-800-PTO-9199 and select option 2.

PTO/SB/27 (09-04)
Approved for use through 07/31/2006. OMB 0651-0031
U.S. Patent and Trademark Office; U.S. DEPARTMENT OF COMMERCE
Under the Paperwork Reduction Act of 1995, no persons are required to respond to a collection of information unless it displays a valid OMB control number.

REQUEST FOR EXPEDITED EXAMINATION OF A DESIGN APPLICATION (37 CFR 1.155)

Application Number	TBA 29/248,446
Filing Date	August 15, 2006
First Named Inventor	Charles Cummins
Title	Portion Of A Display Screen
Atty Docket Number	013797.02398

ADDRESS TO:
MAIL STOP EXPEDITED DESIGN
COMMISSIONER FOR PATENTS
P.O. Box 1450
Alexandria, VA 22313-1450

This is a request for expedited examination of a design application under 37 CFR 1.155.

NOTE: If the Request made by this form accompanies original application papers, include form PTO/SB/18 "Design Patent Application Transmittal" or its equivalent.

A preexamination search was conducted. The field of search was:

Class 345 (subclasses 683, 902); Class 715 (subclasses 764, 771, 773, 775, 776, 835, 836, 837, 838, 839, 846, 976); Class D14 (subclasses 485, 486, 487, 488, 489, 490, 491, 492, 493, 494, 495); Class D18 (subclasses 24, 25, 26, 27, 28, 29, 30, 31, 32, 33) Class D19 (subclasses 6, 7), Class D20 (subclasses 11, 18); Class D21 (subclasses 324, 325, 326, 327, 328, 329, 330, 331, 332, 333)

Related applications Attorney Docket Nos.:

If not previously filed for the above-identified application, the following items required by 37 CFR 1.155 are enclosed:
Formal drawings (see 37 CFR 1.84).
The fee set forth in 37 CFR 1.17(k).
An information disclosure statement in compliance with 37 CFR 1.98.

9-1-06
Approved
Jacqueline M. Stone
Jacqueline M. Stone, Director
Technology Center 1700/2900

/John M. Fleming/ — Signature
August 15, 2006 — Date
John M. Fleming — Typed or printed name
56,536 — Registration Number, if applicable
(202) 824-3000 — Telephone Number

WARNING: Information on this form may become public. Credit card information should not be included on this form. Provide credit card information and authorization on PTO-2038.

This collection of information is required by 37 CFR 1.155. The information is required to obtain or retain a benefit by the public which is to file (and by the USPTO to process) an application. Confidentiality is governed by 35 U.S.C. 122 and 37 CFR 1.11 and 1.14. This collection is estimated to take 6 minutes to complete, including gathering, preparing, and submitting the completed application form to the USPTO. Time will vary depending upon the individual case. Any comments on the amount of time you require to complete this form and/or suggestions for reducing this burden, should be sent to the Chief Information Officer, U.S. Patent and Trademark Office, U.S. Department of Commerce, P.O. Box 1450, Alexandria, VA 22313-1450. DO NOT SEND FEES OR COMPLETED FORMS TO THIS ADDRESS. **SEND TO: Mail Stop Expedited Design, Commissioner for Patents, P.O. Box 1450, Alexandria, VA 22313-1450.**
If you need assistance in completing the form, call 1-800-PTO-9199 and select option 2.

SPE RESPONSE FOR CERTIFICATE OF CORRECTION

Paper No.: _____

DATE : 07/06/09

TO SPE OF : ART UNIT 2911

SUBJECT : Request for Certificate of Correction for Appl. No.: 29248446 Patent No.: D539808 S

Please respond to this request for a certificate of correction within 7 days.

FOR IFW FILES:

Please review the requested changes/corrections as shown in the **COCIN** document(s) in the IFW application image. No new matter should be introduced, nor should the scope or meaning of the claims be changed.

Please complete the response (see below) and forward the completed response to scanning using document code **COCX**.

FOR PAPER FILES:

Please review the requested changes/corrections as shown in the attached certificate of correction. Please complete this form (see below) and forward it with the file to:

Certificates of Correction Branch (C of C)
Randolph Square 9C62-D
Palm Location 7580

Lamonte Newsome
Certificates of Correction Branch
703-756-1574

Thank You For Your Assistance

The request for issuing the above-identified correction(s) is hereby:
Note your decision on the appropriate box.

- ☐ **Approved** — **All** changes apply.
- ☐ **Approved in Part** — Specify below which changes **do not** apply.
- ☐ **Denied** — State the reasons for denial below.

Comments: _____

CATHRON C. BROOKS
SUPERVISORY PATENT EXAMINER

SPE 2911 **Art Unit**

PTO/SB/27 (09-04)
Approved for use through 07/31/2006. OMB 0651-0031
U.S. Patent and Trademark Office; U.S. DEPARTMENT OF COMMERCE
Under the Paperwork Reduction Act of 1995, no persons are required to respond to a collection of information unless it displays a valid OMB control number.

REQUEST FOR EXPEDITED EXAMINATION OF A DESIGN APPLICATION (37 CFR 1.155)

Application Number	TBA 29/248,447
Filing Date	August 15, 2006
First Named Inventor	Charles Cummins
Title	Portion Of A Display Screen
Atty Docket Number	013797.02399

ADDRESS TO:
MAIL STOP EXPEDITED DESIGN
COMMISSIONER FOR PATENTS
P.O. Box 1450
Alexandria, VA 22313-1450

This is a request for expedited examination of a design application under 37 CFR 1.155.

NOTE: If the Request made by this form accompanies original application papers, include form PTO/SB/18 "Design Patent Application Transmittal" or its equivalent.

A preexamination search was conducted. The field of search was:

Class 345 (subclasses 683, 902); Class 715 (subclasses 764, 771, 773, 775, 776, 835, 836, 837, 838, 839, 846, 976); Class D14 (subclasses 485, 486, 487, 488, 489, 490, 491, 492, 493, 494, 495); Class D18 (subclasses 24, 25, 26, 27, 28, 29, 30, 31, 32, 33) Class D19 (subclasses 6, 7), Class D20 (subclasses 11, 18); Class D21 (subclasses 324, 325, 326, 327, 328, 329, 330, 331, 332, 333)

Related applications Attorney Docket Nos.:

If not previously filed for the above-identified application, the following items required by 37 CFR 1.155 are enclosed:
Formal drawings (see 37 CFR 1.84).
The fee set forth in 37 CFR 1.17(k).
An information disclosure statement in compliance with 37 CFR 1.98.

9-1-06
Approved
Jacqueline M. Stone
Jacqueline M. Stone, Director
Technology Center 1700/2900

/John M. Fleming/ — Signature
August 15, 2006 — Date
John M. Fleming — Typed or printed name
56,536 — Registration Number, if applicable
(202) 824-3000 — Telephone Number

WARNING: Information on this form may become public. Credit card information should not be included on this form. Provide credit card information and authorization on PTO-2038.

This collection of information is required by 37 CFR 1.155. The information is required to obtain or retain a benefit by the public which is to file (and by the USPTO to process) an application. Confidentiality is governed by 35 U.S.C. 122 and 37 CFR 1.11 and 1.14. This collection is estimated to take 6 minutes to complete, including gathering, preparing, and submitting the completed application form to the USPTO. Time will vary depending upon the individual case. Any comments on the amount of time you require to complete this form and/or suggestions for reducing this burden, should be sent to the Chief Information Officer, U.S. Patent and Trademark Office, U.S. Department of Commerce, P.O. Box 1450, Alexandria, VA 22313-1450. DO NOT SEND FEES OR COMPLETED FORMS TO THIS ADDRESS. **SEND TO: Mail Stop Expedited Design, Commissioner for Patents, P.O. Box 1450, Alexandria, VA 22313-1450.**
If you need assistance in completing the form, call 1-800-PTO-9199 and select option 2.

PTO/SB/27 (09-04)
Approved for use through 07/31/2006. OMB 0651-0031
U.S. Patent and Trademark Office; U.S. DEPARTMENT OF COMMERCE
Under the Paperwork Reduction Act of 1995, no persons are required to respond to a collection of information unless it displays a valid OMB control number.

REQUEST FOR EXPEDITED EXAMINATION OF A DESIGN APPLICATION (37 CFR 1.155)

Application Number	TBA 29/248,448
Filing Date	August 15, 2006
First Named Inventor	Charles Cummins
Title	Icon For A Portion Of A Display Screen
Atty Docket Number	013797.02400

ADDRESS TO:
MAIL STOP EXPEDITED DESIGN
COMMISSIONER FOR PATENTS
P.O. Box 1450
Alexandria, VA 22313-1450

This is a request for expedited examination of a design application under 37 CFR 1.155.

NOTE: If the Request made by this form accompanies original application papers, include form PTO/SB/18 "Design Patent Application Transmittal" or its equivalent.

A preexamination search was conducted. The field of search was:

Class 345 (subclasses 683, 902); Class 715 (subclasses 764, 771, 773, 775, 776, 835, 836, 837, 838, 839, 846, 976); Class D14 (subclasses 485, 486, 487, 488, 489, 490, 491, 492, 493, 494, 495); Class D18 (subclasses 24, 25, 26, 27, 28, 29, 30, 31, 32, 33) Class D19 (subclasses 6, 7), Class D20 (subclasses 11, 18); Class D21 (subclasses 324, 325, 326, 327, 328, 329, 330, 331, 332, 333)

Related applications Attorney Docket Nos.:

9-1-06

If not previously filed for the above-identified application, the following items required by 37 CFR 1.155 are enclosed:
Formal drawings (see 37 CFR 1.84).
The fee set forth in 37 CFR 1.17(k).
An information disclosure statement in compliance with 37 CFR 1.98.

Approved
Jacqueline M. Stone
Jacqueline M. Stone, Director
Technology Center 1700/2900

/John M. Fleming/ — Signature
August 15, 2006 — Date
John M. Fleming — Typed or printed name
56,536 — Registration Number, if applicable
(202) 824-3000 — Telephone Number

WARNING: Information on this form may become public. Credit card information should not be included on this form. Provide credit card information and authorization on PTO-2038.

This collection of information is required by 37 CFR 1.155. The information is required to obtain or retain a benefit by the public which is to file (and by the USPTO to process) an application. Confidentiality is governed by 35 U.S.C. 122 and 37 CFR 1.11 and 1.14. This collection is estimated to take 6 minutes to complete, including gathering, preparing, and submitting the completed application form to the USPTO. Time will vary depending upon the individual case. Any comments on the amount of time you require to complete this form and/or suggestions for reducing this burden, should be sent to the Chief Information Officer, U.S. Patent and Trademark Office, U.S. Department of Commerce, P.O. Box 1450, Alexandria, VA 22313-1450. DO NOT SEND FEES OR COMPLETED FORMS TO THIS ADDRESS. **SEND TO: Mail Stop Expedited Design, Commissioner for Patents, P.O. Box 1450, Alexandria, VA 22313-1450.**
If you need assistance in completing the form, call 1-800-PTO-9199 and select option 2.

PTO/SB/27 (09-04)
Approved for use through 07/31/2006. OMB 0651-0031
U.S. Patent and Trademark Office; U.S. DEPARTMENT OF COMMERCE
Under the Paperwork Reduction Act of 1995, no persons are required to respond to a collection of information unless it displays a valid OMB control number.

REQUEST FOR EXPEDITED EXAMINATION OF A DESIGN APPLICATION (37 CFR 1.155)

Application Number	TBA 29/248,449
Filing Date	August 15, 2006
First Named Inventor	Charles Cummins
Title	Icon For A Portion Of A Display Screen
Atty Docket Number	013797.02401

ADDRESS TO:
MAIL STOP EXPEDITED DESIGN
COMMISSIONER FOR PATENTS
P.O. Box 1450
Alexandria, VA 22313-1450

This is a request for expedited examination of a design application under 37 CFR 1.155.

NOTE: If the Request made by this form accompanies original application papers, include form PTO/SB/18 "Design Patent Application Transmittal" or its equivalent.

A preexamination search was conducted. The field of search was:

Class 345 (subclasses 683, 902); Class 715 (subclasses 764, 771, 773, 775, 776, 835, 836, 837, 838, 839, 846, 976); Class D14 (subclasses 485, 486, 487, 488, 489, 490, 491, 492, 493, 494, 495); Class D18 (subclasses 24, 25, 26, 27, 28, 29, 30, 31, 32, 33) Class D19 (subclasses 6, 7), Class D20 (subclasses 11, 18); Class D21 (subclasses 324, 325, 326, 327, 328, 329, 330, 331, 332, 333)

Related applications Attorney Docket Nos.:

If not previously filed for the above-identified application, the following items required by 37 CFR 1.155 are enclosed:
Formal drawings (see 37 CFR 1.84).
The fee set forth in 37 CFR 1.17(k).
An information disclosure statement in compliance with 37 CFR 1.98.

9-1-06
Approved
Jacqueline M. Stone
Jacqueline M. Stone, Director
Technology Center 1700/2900

/John M. Fleming/ — Signature
August 15, 2006 — Date
John M. Fleming — Typed or printed name
56,536 — Registration Number, if applicable
(202) 824-3000 — Telephone Number

WARNING: Information on this form may become public. Credit card information should not be included on this form. Provide credit card information and authorization on PTO-2038.

This collection of information is required by 37 CFR 1.155. The information is required to obtain or retain a benefit by the public which is to file (and by the USPTO to process) an application. Confidentiality is governed by 35 U.S.C. 122 and 37 CFR 1.11 and 1.14. This collection is estimated to take 6 minutes to complete, including gathering, preparing, and submitting the completed application form to the USPTO. Time will vary depending upon the individual case. Any comments on the amount of time you require to complete this form and/or suggestions for reducing this burden, should be sent to the Chief Information Officer, U.S. Patent and Trademark Office, U.S. Department of Commerce, P.O. Box 1450, Alexandria, VA 22313-1450. DO NOT SEND FEES OR COMPLETED FORMS TO THIS ADDRESS. **SEND TO: Mail Stop Expedited Design, Commissioner for Patents, P.O. Box 1450, Alexandria, VA 22313-1450.**
If you need assistance in completing the form, call 1-800-PTO-9199 and select option 2.

PTO/SB/27 (09-04)
Approved for use through 07/31/2006. OMB 0651-0031
U.S. Patent and Trademark Office; U.S. DEPARTMENT OF COMMERCE
Under the Paperwork Reduction Act of 1995, no persons are required to respond to a collection of information unless it displays a valid OMB control number.

REQUEST FOR EXPEDITED EXAMINATION OF A DESIGN APPLICATION (37 CFR 1.155)

Application Number	TBA 29/248,450
Filing Date	August 15, 2006
First Named Inventor	Charles Cummins
Title	Icon For A Portion Of A Display Screen
Atty Docket Number	013797.02402

ADDRESS TO:
MAIL STOP EXPEDITED DESIGN
COMMISSIONER FOR PATENTS
P.O. Box 1450
Alexandria, VA 22313-1450

This is a request for expedited examination of a design application under 37 CFR 1.155.

NOTE: If the Request made by this form accompanies original application papers, include form PTO/SB/18 "Design Patent Application Transmittal" or its equivalent.

A preexamination search was conducted. The field of search was:

Class 345 (subclasses 683, 902); Class 715 (subclasses 764, 771, 773, 775, 776, 835, 836, 837, 838, 839, 846, 976); Class D14 (subclasses 485, 486, 487, 488, 489, 490, 491, 492, 493, 494, 495); Class D18 (subclasses 24, 25, 26, 27, 28, 29, 30, 31, 32, 33) Class D19 (subclasses 6, 7), Class D20 (subclasses 11, 18); Class D21 (subclasses 324, 325, 326, 327, 328, 329, 330, 331, 332, 333)

Related applications Attorney Docket Nos.:

If not previously filed for the above-identified application, the following items required by 37 CFR 1.155 are enclosed:
Formal drawings (see 37 CFR 1.84).
The fee set forth in 37 CFR 1.17(k).
An information disclosure statement in compliance with 37 CFR 1.98.

9-1-06
Approved
Jacqueline M. Stone
Jacqueline M. Stone, Director
Technology Center 1700/2900

/John M. Fleming/ — Signature
August 15, 2006 — Date
John M. Fleming — Typed or printed name
56,536 — Registration Number, If applicable
(202) 824-3000 — Telephone Number

WARNING: Information on this form may become public. Credit card information should not be included on this form. Provide credit card information and authorization on PTO-2038.

This collection of information is required by 37 CFR 1.155. The information is required to obtain or retain a benefit by the public which is to file (and by the USPTO to process) an application. Confidentiality is governed by 35 U.S.C. 122 and 37 CFR 1.11 and 1.14. This collection is estimated to take 6 minutes to complete, including gathering, preparing, and submitting the completed application form to the USPTO. Time will vary depending upon the individual case. Any comments on the amount of time you require to complete this form and/or suggestions for reducing this burden, should be sent to the Chief Information Officer, U.S. Patent and Trademark Office, U.S. Department of Commerce, P.O. Box 1450, Alexandria, VA 22313-1450. DO NOT SEND FEES OR COMPLETED FORMS TO THIS ADDRESS. **SEND TO: Mail Stop Expedited Design, Commissioner for Patents, P.O. Box 1450, Alexandria, VA 22313-1450.**
If you need assistance in completing the form, call 1-800-PTO-9199 and select option 2.

PTO/SB/27 (09-04)
Approved for use through 07/31/2006. OMB 0651-0031
U.S. Patent and Trademark Office; U.S. DEPARTMENT OF COMMERCE
Under the Paperwork Reduction Act of 1995, no persons are required to respond to a collection of information unless it displays a valid OMB control number.

REQUEST FOR EXPEDITED EXAMINATION OF A DESIGN APPLICATION (37 CFR 1.155)

Application Number	TBA 29/248,452
Filing Date	August 15, 2006
First Named Inventor	Charles Cummins
Title	Icon For A Portion Of A Display Screen
Atty Docket Number	013797.02404

ADDRESS TO:
MAIL STOP EXPEDITED DESIGN
COMMISSIONER FOR PATENTS
P.O. Box 1450
Alexandria, VA 22313-1450

This is a request for expedited examination of a design application under 37 CFR 1.155.

NOTE: If the Request made by this form accompanies original application papers, include form PTO/SB/18 "Design Patent Application Transmittal" or its equivalent.

A preexamination search was conducted. The field of search was:

Class 345 (subclasses 683, 902); Class 715 (subclasses 764, 771, 773, 775, 776, 835, 836, 837, 838, 839, 846, 976); Class D14 (subclasses 485, 486, 487, 488, 489, 490, 491, 492, 493, 494, 495); Class D18 (subclasses 24, 25, 26, 27, 28, 29, 30, 31, 32, 33) Class D19 (subclasses 6, 7), Class D20 (subclasses 11, 18); Class D21 (subclasses 324, 325, 326, 327, 328, 329, 330, 331, 332, 333)

Related applications Attorney Docket Nos.:

If not previously filed for the above-identified application, the following items required by 37 CFR 1.155 are enclosed:
Formal drawings (see 37 CFR 1.84).
The fee set forth in 37 CFR 1.17(k).
An information disclosure statement in compliance with 37 CFR 1.98.

9-1-06
Approved
Jacqueline M. Stone
Jacqueline M. Stone, Director
Technology Center 1700/2900

/John M. Fleming/ — Signature
August 15, 2006 — Date
John M. Fleming — Typed or printed name
56,536 — Registration Number, if applicable
(202) 824-3000 — Telephone Number

WARNING: Information on this form may become public. Credit card information should not be included on this form. Provide credit card information and authorization on PTO-2038.

This collection of information is required by 37 CFR 1.155. The information is required to obtain or retain a benefit by the public which is to file (and by the USPTO to process) an application. Confidentiality is governed by 35 U.S.C. 122 and 37 CFR 1.11 and 1.14. This collection is estimated to take 6 minutes to complete, including gathering, preparing, and submitting the completed application form to the USPTO. Time will vary depending upon the individual case. Any comments on the amount of time you require to complete this form and/or suggestions for reducing this burden, should be sent to the Chief Information Officer, U.S. Patent and Trademark Office, U.S. Department of Commerce, P.O. Box 1450, Alexandria, VA 22313-1450. DO NOT SEND FEES OR COMPLETED FORMS TO THIS ADDRESS. **SEND TO: Mail Stop Expedited Design, Commissioner for Patents, P.O. Box 1450, Alexandria, VA 22313-1450.**
If you need assistance in completing the form, call 1-800-PTO-9199 and select option 2.

PTO/SB/27 (09-04)
Approved for use through 07/31/2006. OMB 0651-0031
U.S. Patent and Trademark Office; U.S. DEPARTMENT OF COMMERCE
Under the Paperwork Reduction Act of 1995, no persons are required to respond to a collection of information unless it displays a valid OMB control number.

REQUEST FOR EXPEDITED EXAMINATION OF A DESIGN APPLICATION (37 CFR 1.155)

Application Number	TBA 29/248,453
Filing Date	August 15, 2006
First Named Inventor	Charles Cummins
Title	Icon For A Portion Of A Display Screen
Atty Docket Number	013797.02405

ADDRESS TO:
MAIL STOP EXPEDITED DESIGN
COMMISSIONER FOR PATENTS
P.O. Box 1450
Alexandria, VA 22313-1450

This is a request for expedited examination of a design application under 37 CFR 1.155.

NOTE: If the Request made by this form accompanies original application papers, include form PTO/SB/18 "Design Patent Application Transmittal" or its equivalent.

A preexamination search was conducted. The field of search was:

Class 345 (subclasses 683, 902); Class 715 (subclasses 764, 771, 773, 775, 776, 835, 836, 837, 838, 839, 846, 976); Class D14 (subclasses 485, 486, 487, 488, 489, 490, 491, 492, 493, 494, 495); Class D18 (subclasses 24, 25, 26, 27, 28, 29, 30, 31, 32, 33) Class D19 (subclasses 6, 7), Class D20 (subclasses 11, 18); Class D21 (subclasses 324, 325, 326, 327, 328, 329, 330, 331, 332, 333)

Related applications Attorney Docket Nos.:

9-1-06
Approved
Jacqueline M. Stone
Jacqueline M. Stone, Director
Technology Center 1700/2900

If not previously filed for the above-identified application, the following items required by 37 CFR 1.155 are enclosed:
Formal drawings (see 37 CFR 1.84).
The fee set forth in 37 CFR 1.17(k).
An information disclosure statement in compliance with 37 CFR 1.98.

/John M. Fleming/ — Signature
August 15, 2006 — Date
John M. Fleming — Typed or printed name
56,536 — Registration Number, if applicable
(202) 824-3000 — Telephone Number

WARNING: Information on this form may become public. Credit card information should not be included on this form. Provide credit card information and authorization on PTO-2038.

This collection of information is required by 37 CFR 1.155. The information is required to obtain or retain a benefit by the public which is to file (and by the USPTO to process) an application. Confidentiality is governed by 35 U.S.C. 122 and 37 CFR 1.11 and 1.14. This collection is estimated to take 6 minutes to complete, including gathering, preparing, and submitting the completed application form to the USPTO. Time will vary depending upon the individual case. Any comments on the amount of time you require to complete this form and/or suggestions for reducing this burden, should be sent to the Chief Information Officer, U.S. Patent and Trademark Office, U.S. Department of Commerce, P.O. Box 1450, Alexandria, VA 22313-1450. DO NOT SEND FEES OR COMPLETED FORMS TO THIS ADDRESS. **SEND TO: Mail Stop Expedited Design, Commissioner for Patents, P.O. Box 1450, Alexandria, VA 22313-1450.**
If you need assistance in completing the form, call 1-800-PTO-9199 and select option 2.

PTO/SB/27 (09-04)
Approved for use through 07/31/2006. OMB 0651-0031
U.S. Patent and Trademark Office; U.S. DEPARTMENT OF COMMERCE
Under the Paperwork Reduction Act of 1995, no persons are required to respond to a collection of information unless it displays a valid OMB control number.

REQUEST FOR EXPEDITED EXAMINATION OF A DESIGN APPLICATION (37 CFR 1.155)

Application Number	TBA 29/248 454
Filing Date	August 15, 2006
First Named Inventor	Charles Cummins
Title	Transitional Image For A Portion Of A Display Screen
Atty Docket Number	013797.02406

ADDRESS TO:
MAIL STOP EXPEDITED DESIGN
COMMISSIONER FOR PATENTS
P.O. Box 1450
Alexandria, VA 22313-1450

This is a request for expedited examination of a design application under 37 CFR 1.155.

NOTE: If the Request made by this form accompanies original application papers, include form PTO/SB/18 "Design Patent Application Transmittal" or its equivalent.

A preexamination search was conducted. The field of search was:

Class 345 (subclasses 683, 902); Class 715 (subclasses 764, 771, 773, 775, 776, 835, 836, 837, 838, 839, 846, 976); Class D14 (subclasses 485, 486, 487, 488, 489, 490, 491, 492, 493, 494, 495); Class D18 (subclasses 24, 25, 26, 27, 28, 29, 30, 31, 32, 33) Class D19 (subclasses 6, 7), Class D20 (subclasses 11, 18); Class D21 (subclasses 324, 325, 326, 327, 328, 329, 330, 331, 332, 333)

Related applications Attorney Docket Nos.:

If not previously filed for the above-identified application, the following items required by 37 CFR 1.155 are enclosed:
- Formal drawings (see 37 CFR 1.84).
- The fee set forth in 37 CFR 1.17(k).
- An information disclosure statement in compliance with 37 CFR 1.98.

8-22-06
Approved
Jacqueline M. Stone
Jacqueline M. Stone, Director
Technology Center 1700/2900

/John M. Fleming/ — Signature
August 15, 2006 — Date
John M. Fleming — Typed or printed name
56,536 — Registration Number, if applicable
(202) 824-3000 — Telephone Number

WARNING: Information on this form may become public. Credit card information should not be included on this form. Provide credit card information and authorization on PTO-2038.

This collection of information is required by 37 CFR 1.155. The information is required to obtain or retain a benefit by the public which is to file (and by the USPTO to process) an application. Confidentiality is governed by 35 U.S.C. 122 and 37 CFR 1.11 and 1.14. This collection is estimated to take 6 minutes to complete, including gathering, preparing, and submitting the completed application form to the USPTO. Time will vary depending upon the individual case. Any comments on the amount of time you require to complete this form and/or suggestions for reducing this burden, should be sent to the Chief Information Officer, U.S. Patent and Trademark Office, U.S. Department of Commerce, P.O. Box 1450, Alexandria, VA 22313-1450. DO NOT SEND FEES OR COMPLETED FORMS TO THIS ADDRESS. **SEND TO: Mail Stop Expedited Design, Commissioner for Patents, P.O. Box 1450, Alexandria, VA 22313-1450.**
If you need assistance in completing the form, call 1-800-PTO-9199 and select option 2.

PTO/SB/27 (09-04)
Approved for use through 07/31/2006. OMB 0651-0031
U.S. Patent and Trademark Office; U.S. DEPARTMENT OF COMMERCE
Under the Paperwork Reduction Act of 1995, no persons are required to respond to a collection of information unless it displays a valid OMB control number.

REQUEST FOR EXPEDITED EXAMINATION OF A DESIGN APPLICATION (37 CFR 1.155)

Application Number	TBA 29/248,455
Filing Date	August 15, 2006
First Named Inventor	Charles Cummins
Title	Transitional Image For A Portion Of A Display Screen
Atty Docket Number	013797.02407

ADDRESS TO:
MAIL STOP EXPEDITED DESIGN
COMMISSIONER FOR PATENTS
P.O. Box 1450
Alexandria, VA 22313-1450

This is a request for expedited examination of a design application under 37 CFR 1.155.

NOTE: If the Request made by this form accompanies original application papers, include form PTO/SB/18 "Design Patent Application Transmittal" or its equivalent.

A preexamination search was conducted. The field of search was:

Class 345 (subclasses 683, 902); Class 715 (subclasses 764, 771, 773, 775, 776, 835, 836, 837, 838, 839, 846, 976); Class D14 (subclasses 485, 486, 487, 488, 489, 490, 491, 492, 493, 494, 495); Class D18 (subclasses 24, 25, 26, 27, 28, 29, 30, 31, 32, 33) Class D19 (subclasses 6, 7), Class D20 (subclasses 11, 18); Class D21 (subclasses 324, 325, 326, 327, 328, 329, 330, 331, 332, 333)

Related applications Attorney Docket Nos.:

If not previously filed for the above-identified application, the following items required by 37 CFR 1.155 are enclosed:
Formal drawings (see 37 CFR 1.84).
The fee set forth in 37 CFR 1.17(k).
An information disclosure statement in compliance with 37 CFR 1.98.

8-22-06
Approved
Jacqueline M. Stone
Jacqueline M. Stone, Director
Technology Center 1700/2900

/John M. Fleming/ — Signature
August 15, 2006 — Date
John M. Fleming — Typed or printed name
56,536 — Registration Number, if applicable
(202) 824-3000 — Telephone Number

WARNING: Information on this form may become public. Credit card information should not be included on this form. Provide credit card information and authorization on PTO-2038.

This collection of information is required by 37 CFR 1.155. The information is required to obtain or retain a benefit by the public which is to file (and by the USPTO to process) an application. Confidentiality is governed by 35 U.S.C. 122 and 37 CFR 1.11 and 1.14. This collection is estimated to take 6 minutes to complete, including gathering, preparing, and submitting the completed application form to the USPTO. Time will vary depending upon the individual case. Any comments on the amount of time you require to complete this form and/or suggestions for reducing this burden, should be sent to the Chief Information Officer, U.S. Patent and Trademark Office, U.S. Department of Commerce, P.O. Box 1450, Alexandria, VA 22313-1450. DO NOT SEND FEES OR COMPLETED FORMS TO THIS ADDRESS. **SEND TO: Mail Stop Expedited Design, Commissioner for Patents, P.O. Box 1450, Alexandria, VA 22313-1450.**
If you need assistance in completing the form, call 1-800-PTO-9199 and select option 2.

PTO/SB/27 (09-04)
Approved for use through 07/31/2006. OMB 0651-0031
U.S. Patent and Trademark Office; U.S. DEPARTMENT OF COMMERCE
Under the Paperwork Reduction Act of 1995, no persons are required to respond to a collection of information unless it displays a valid OMB control number.

REQUEST FOR EXPEDITED EXAMINATION OF A DESIGN APPLICATION (37 CFR 1.155)

Application Number	TBA 29/248,456
Filing Date	August 15, 2006
First Named Inventor	Charles Cummins
Title	User Interface For A Portion Of A Display Screen
Atty Docket Number	013797.02408

ADDRESS TO:
MAIL STOP EXPEDITED DESIGN
COMMISSIONER FOR PATENTS
P.O. Box 1450
Alexandria. VA 22313-1450

This is a request for expedited examination of a design application under 37 CFR 1.155.

NOTE: If the Request made by this form accompanies original application papers, include form PTO/SB/18 "Design Patent Application Transmittal" or its equivalent.

A preexamination search was conducted. The field of search was:

Class 345 (subclasses 683, 902); Class 715 (subclasses 764, 771, 773, 775, 776, 835, 836, 837, 838, 839, 846, 976); Class D14 (subclasses 485, 486, 487, 488, 489, 490, 491, 492, 493, 494, 495); Class D18 (subclasses 24, 25, 26, 27, 28, 29, 30, 31, 32, 33) Class D19 (subclasses 6, 7), Class D20 (subclasses 11, 18); Class D21 (subclasses 324, 325, 326, 327, 328, 329, 330, 331, 332, 333)

Related applications Attorney Docket Nos.:

If not previously filed for the above-identified application, the following items required by 37 CFR 1.155 are enclosed:
Formal drawings (see 37 CFR 1.84).
The fee set forth in 37 CFR 1.17(k).
An information disclosure statement in compliance with 37 CFR 1.98.

8-22-06
Approved
Jacqueline M. Stone
Jacqueline M. Stone, Director
Technology Center 1700/2900

/John M. Fleming/ — Signature
August 15, 2006 — Date
John M. Fleming — Typed or printed name
56,536 — Registration Number, if applicable
(202) 824-3000 — Telephone Number

WARNING: Information on this form may become public. Credit card information should not be included on this form. Provide credit card information and authorization on PTO-2038.

This collection of information is required by 37 CFR 1.155. The information is required to obtain or retain a benefit by the public which is to file (and by the USPTO to process) an application. Confidentiality is governed by 35 U.S.C. 122 and 37 CFR 1.11 and 1.14. This collection is estimated to take 6 minutes to complete, including gathering, preparing, and submitting the completed application form to the USPTO. Time will vary depending upon the individual case. Any comments on the amount of time you require to complete this form and/or suggestions for reducing this burden, should be sent to the Chief Information Officer, U.S. Patent and Trademark Office, U.S. Department of Commerce, P.O. Box 1450, Alexandria, VA 22313-1450. DO NOT SEND FEES OR COMPLETED FORMS TO THIS ADDRESS. **SEND TO: Mail Stop Expedited Design, Commissioner for Patents, P.O. Box 1450, Alexandria, VA 22313-1450.**
If you need assistance in completing the form, call 1-800-PTO-9199 and select option 2.

PTO/SB/27 (09-04)
Approved for use through 07/31/2006. OMB 0651-0031
U.S. Patent and Trademark Office; U.S. DEPARTMENT OF COMMERCE
Under the Paperwork Reduction Act of 1995, no persons are required to respond to a collection of information unless it displays a valid OMB control number.

REQUEST FOR EXPEDITED EXAMINATION OF A DESIGN APPLICATION (37 CFR 1.155)

Application Number	TBA 29/048,457
Filing Date	August 15, 2006
First Named Inventor	Charles Cummins
Title	Icon For A Portion Of A Display Screen
Atty Docket Number	013797.02409

ADDRESS TO:
MAIL STOP EXPEDITED DESIGN
COMMISSIONER FOR PATENTS
P.O. Box 1450
Alexandria, VA 22313-1450

This is a request for expedited examination of a design application under 37 CFR 1.155.

NOTE: If the Request made by this form accompanies original application papers, include form PTO/SB/18 "Design Patent Application Transmittal" or its equivalent.

A preexamination search was conducted. The field of search was:

Class 345 (subclasses 683, 902); Class 715 (subclasses 764, 771, 773, 775, 776, 835, 836, 837, 838, 839, 846, 976); Class D14 (subclasses 485, 486, 487, 488, 489, 490, 491, 492, 493, 494, 495); Class D18 (subclasses 24, 25, 26, 27, 28, 29, 30, 31, 32, 33) Class D19 (subclasses 6, 7), Class D20 (subclasses 11, 18); Class D21 (subclasses 324, 325, 326, 327, 328, 329, 330, 331, 332, 333)

Related applications Attorney Docket Nos.:

If not previously filed for the above-identified application, the following items required by 37 CFR 1.155 are enclosed:
Formal drawings (see 37 CFR 1.84).
The fee set forth in 37 CFR 1.17(k).
An information disclosure statement in compliance with 37 CFR 1.98.

8-22-06
Approved
Jacqueline M. Stone
Jacqueline M. Stone, Director
Technology Center 1700/2900

/John M. Fleming/ — Signature
August 15, 2006 — Date
John M. Fleming — Typed or printed name
56,536 — Registration Number, if applicable
(202) 824-3000 — Telephone Number

WARNING: Information on this form may become public. Credit card information should not be included on this form. Provide credit card information and authorization on PTO-2038.

This collection of information is required by 37 CFR 1.155. The information is required to obtain or retain a benefit by the public which is to file (and by the USPTO to process) an application. Confidentiality is governed by 35 U.S.C. 122 and 37 CFR 1.11 and 1.14. This collection is estimated to take 6 minutes to complete, including gathering, preparing, and submitting the completed application form to the USPTO. Time will vary depending upon the individual case. Any comments on the amount of time you require to complete this form and/or suggestions for reducing this burden, should be sent to the Chief Information Officer, U.S. Patent and Trademark Office, U.S. Department of Commerce, P.O. Box 1450, Alexandria, VA 22313-1450. DO NOT SEND FEES OR COMPLETED FORMS TO THIS ADDRESS. **SEND TO: Mail Stop Expedited Design, Commissioner for Patents, P.O. Box 1450, Alexandria, VA 22313-1450.**
If you need assistance in completing the form, call 1-800-PTO-9199 and select option 2.

UNITED STATES PATENT AND TRADEMARK OFFICE

Commissioner for Patents
United States Patent and Trademark Office
P.O. Box 1450
Alexandria, VA 22313-1450
www.uspto.gov

HANDHELD PRODUCTS, INC.
700 VISIONS DRIVE
P.O. BOX 208
SKANEATELES FALLS, NY 13153-0208

COPY MAILED

NOV 0 9 2007

OFFICE OF PETITIONS

In re Application of	:	
Timothy R. Fitch et al.	:	
Application No. 29/248,472	:	DECISION ON PETITION
Filed: August 17, 2006	:	
Attorney Docket No. 2006004-2	:	

This is a decision on the petition under 37 CFR 1.137(b), filed September 25, 2007, to revive the above-identified application.

The petition is **GRANTED**.

This application became abandoned for failure to timely pay the issue fee and submit corrected drawings on or before September 4, 2007, as required by the Notice of Allowance and Fee(s) Due and Notice of Allowability, mailed June 1, 2007. Accordingly, the date of abandonment of this application is September 5, 2007. A Notice of Abandonment was mailed on September 25, 2007.

The petition satisfies the requirements of 37 CFR 1.137(b) in that petitioner has supplied (1) the reply in the form of payment of the issue fee of $800.00 and corrected drawings (2) the petition fee of $1500, and (3) a proper statement of unintentional delay. Accordingly, the issue fee and drawings are accepted as being unintentionally delayed.

The terminal disclaimer is accepted and has been made of record. Any continuing application filed from this application must contain a copy of the terminal disclaimer. The copy of the terminal disclaimer must be filed with a cover letter requesting the terminal disclaimer be recorded on the continuing application. A copy of this decision should be attached to the cover letter.

Telephone inquiries concerning this decision should be directed to Kimberly Inabinet at (571) 272-4618.

This application is being referred to Publishing Division for appropriate processing in accordance with this decision on petition.

Frances Hicks
Petitions Examiner
Office of Petitions

PTO/SB/27 (09-04)
Approved for use through 07/31/2006. OMB 0651-0031
U.S. Patent and Trademark Office; U.S. DEPARTMENT OF COMMERCE
Under the Paperwork Reduction Act of 1995, no persons are required to respond to a collection of information unless it displays a valid OMB control number.

REQUEST FOR EXPEDITED EXAMINATION OF A DESIGN APPLICATION (37 CFR 1.155)

Application Number	TBA 29/248,476
Filing Date	August 17, 2006
First Named Inventor	Charles Cummins
Title	Portion Of A Display Screen
Atty Docket Number	013797.02397

ADDRESS TO:
MAIL STOP EXPEDITED DESIGN
COMMISSIONER FOR PATENTS
P.O. Box 1450
Alexandria, VA 22313-1450

This is a request for expedited examination of a design application under 37 CFR 1.155.

NOTE: If the Request made by this form accompanies original application papers, include form PTO/SB/18 "Design Patent Application Transmittal" or its equivalent.

A preexamination search was conducted. The field of search was:

Class 345 (subclasses 683, 902); Class 715 (subclasses 764, 771, 773, 775, 776, 835, 836, 837, 838, 839, 846, 976); Class D14 (subclasses 485, 486, 487, 488, 489, 490, 491, 492, 493, 494, 495); Class D18 (subclasses 24, 25, 26, 27, 28, 29, 30, 31, 32, 33) Class D19 (subclasses 6, 7), Class D20 (subclasses 11, 18); Class D21 (subclasses 324, 325, 326, 327, 328, 329, 330, 331, 332, 333)

Related applications Attorney Docket Nos.:

If not previously filed for the above-identified application, the following items required by 37 CFR 1.155 are enclosed:
Formal drawings (see 37 CFR 1.84).
The fee set forth in 37 CFR 1.17(k).
An information disclosure statement in compliance with 37 CFR 1.98.

9-1-06
Approved
Jacqueline M. Stone
Jacqueline M. Stone, Director
Technology Center 1700/2900

/John M. Fleming/ — Signature
August 17, 2006 — Date
John M. Fleming — Typed or printed name
56,536 — Registration Number, if applicable
(202) 824-3000 — Telephone Number

WARNING: Information on this form may become public. Credit card information should not be included on this form. Provide credit card information and authorization on PTO-2038.

This collection of information is required by 37 CFR 1.155. The information is required to obtain or retain a benefit by the public which is to file (and by the USPTO to process) an application. Confidentiality is governed by 35 U.S.C. 122 and 37 CFR 1.11 and 1.14. This collection is estimated to take 6 minutes to complete, including gathering, preparing, and submitting the completed application form to the USPTO. Time will vary depending upon the individual case. Any comments on the amount of time you require to complete this form and/or suggestions for reducing this burden, should be sent to the Chief Information Officer, U.S. Patent and Trademark Office, U.S. Department of Commerce, P.O. Box 1450, Alexandria, VA 22313-1450. DO NOT SEND FEES OR COMPLETED FORMS TO THIS ADDRESS. **SEND TO: Mail Stop Expedited Design, Commissioner for Patents, P.O. Box 1450, Alexandria, VA 22313-1450.**
If you need assistance in completing the form, call 1-800-PTO-9199 and select option 2.

PTO/SB/27 (09-04)
Approved for use through 07/31/2006. OMB 0651-0031
U.S. Patent and Trademark Office; U.S. DEPARTMENT OF COMMERCE
Under the Paperwork Reduction Act of 1995, no persons are required to respond to a collection of information unless it displays a valid OMB control number.

REQUEST FOR EXPEDITED EXAMINATION OF A DESIGN APPLICATION (37 CFR 1.155)

Application Number	TBA 29/248,477
Filing Date	August 17, 2006
First Named Inventor	Marcus Harvey
Title	Icon For A Portion Of A Display Screen
Atty Docket Number	013797.02410

ADDRESS TO:
MAIL STOP EXPEDITED DESIGN
COMMISSIONER FOR PATENTS
P.O. Box 1450
Alexandria, VA 22313-1450

This is a request for expedited examination of a design application under 37 CFR 1.155.

NOTE: If the Request made by this form accompanies original application papers, include form PTO/SB/18 "Design Patent Application Transmittal" or its equivalent.

A preexamination search was conducted. The field of search was:

Class 345 (subclasses 683, 902); Class 715 (subclasses 764, 771, 773, 775, 776, 835, 836, 837, 838, 839, 846, 976); Class D10 (subclasses 6, 7, 8, 14, 20); Class D14 (subclasses 485, 486, 487, 488, 489, 490, 491, 492, 493, 494, 495); Class D18 (subclasses 24, 25, 26, 27, 28, 29, 30, 31, 32, 33) Class D19 (subclasses 6, 7), Class D20 (subclasses 11, 18); Class D21 (subclasses 324, 325, 326, 327, 328, 329, 330, 331, 332, 333)

Related applications Attorney Docket Nos.:

If not previously filed for the above-identified application, the following items required by 37 CFR 1.155 are enclosed:
Formal drawings (see 37 CFR 1.84).
The fee set forth in 37 CFR 1.17(k).
An Information disclosure statement in compliance with 37 CFR 1.98.

9-1-06
Approved Jacqueline M. Stone
Jacqueline M. Stone, Director
Technology Center 1700/2900

/John M. Fleming/ — Signature
August 17, 2006 — Date
John M. Fleming — Typed or printed name
56,536 — Registration Number, if applicable
(202) 824-3000 — Telephone Number

WARNING: Information on this form may become public. Credit card information should not be included on this form. Provide credit card information and authorization on PTO-2038.

This collection of information is required by 37 CFR 1.155. The information is required to obtain or retain a benefit by the public which is to file (and by the USPTO to process) an application. Confidentiality is governed by 35 U.S.C. 122 and 37 CFR 1.11 and 1.14. This collection is estimated to take 6 minutes to complete, including gathering, preparing, and submitting the completed application form to the USPTO. Time will vary depending upon the individual case. Any comments on the amount of time you require to complete this form and/or suggestions for reducing this burden, should be sent to the Chief Information Officer, U.S. Patent and Trademark Office, U.S. Department of Commerce, P.O. Box 1450, Alexandria, VA 22313-1450. DO NOT SEND FEES OR COMPLETED FORMS TO THIS ADDRESS. **SEND TO: Mail Stop Expedited Design, Commissioner for Patents, P.O. Box 1450, Alexandria, VA 22313-1450.**
If you need assistance in completing the form, call 1-800-PTO-9199 and select option 2.

PTO/SB/27 (09-04)
Approved for use through 07/31/2006. OMB 0651-0031
U.S. Patent and Trademark Office; U.S. DEPARTMENT OF COMMERCE
Under the Paperwork Reduction Act of 1995, no persons are required to respond to a collection of information unless it displays a valid OMB control number.

REQUEST FOR EXPEDITED EXAMINATION OF A DESIGN APPLICATION (37 CFR 1.155)

Application Number	TBA 29/248,491
Filing Date	August 17, 2006
First Named Inventor	Marcus Harvey
Title	Icon For A Portion Of A Display Screen
Atty Docket Number	013797.02411

ADDRESS TO:
MAIL STOP EXPEDITED DESIGN
COMMISSIONER FOR PATENTS
P.O. Box 1450
Alexandria, VA 22313-1450

This is a request for expedited examination of a design application under 37 CFR 1.155.

NOTE: If the Request made by this form accompanies original application papers, include form PTO/SB/18 "Design Patent Application Transmittal" or its equivalent.

A preexamination search was conducted. The field of search was:

Class 345 (subclasses 683, 902); Class 715 (subclasses 764, 771, 773, 775, 776, 835, 836, 837, 838, 839, 846, 976); Class D10 (subclass 6, 7, 8, 14, 20); Class D14 (subclasses 485, 486, 487, 488, 489, 490, 491, 492, 493, 494, 495); Class D18 (subclasses 24, 25, 26, 27, 28, 29, 30, 31, 32, 33) Class D19 (subclasses 6, 7), Class D20 (subclasses 11, 18); Class D21 (subclasses 324, 325, 326, 327, 328, 329, 330, 331, 332, 333)

Related applications Attorney Docket Nos.:

If not previously filed for the above-identified application, the following items required by 37 CFR 1.155 are enclosed:
Formal drawings (see 37 CFR 1.84).
The fee set forth in 37 CFR 1.17(k).
An information disclosure statement in compliance with 37 CFR 1.98.

9-1-06
Approved
Jacqueline M. Stone
Jacqueline M. Stone, Director
Technology Center 1700/2900

/John M. Fleming/ — Signature
August 17, 2006 — Date
John M. Fleming — Typed or printed name
56,536 — Registration Number, if applicable
(202) 824-3000 — Telephone Number

WARNING: Information on this form may become public. Credit card information should not be included on this form. Provide credit card information and authorization on PTO-2038.

This collection of information is required by 37 CFR 1.155. The information is required to obtain or retain a benefit by the public which is to file (and by the USPTO to process) an application. Confidentiality is governed by 35 U.S.C. 122 and 37 CFR 1.11 and 1.14. This collection is estimated to take 6 minutes to complete, including gathering, preparing, and submitting the completed application form to the USPTO. Time will vary depending upon the individual case. Any comments on the amount of time you require to complete this form and/or suggestions for reducing this burden, should be sent to the Chief Information Officer, U.S. Patent and Trademark Office, U.S. Department of Commerce, P.O. Box 1450, Alexandria, VA 22313-1450. DO NOT SEND FEES OR COMPLETED FORMS TO THIS ADDRESS. **SEND TO: Mail Stop Expedited Design, Commissioner for Patents, P.O. Box 1450, Alexandria, VA 22313-1450.**
If you need assistance in completing the form, call 1-800-PTO-9199 and select option 2.

PTO/SB/27 (07-05)
Approved for use through 09/30/2006. OMB 0651-0031
U.S. Patent and Trademark Office; U.S. DEPARTMENT OF COMMERCE
Under the Paperwork Reduction Act of 1995, no persons are required to respond to a collection of information unless it displays a valid OMB control number.

REQUEST FOR EXPEDITED EXAMINATION OF A DESIGN APPLICATION (37 CFR 1.155)		
	Application Number	Not Yet Assigned 29/248,509
	Filing Date	Concurrently Herewith
	First Named Inventor	Clemens V. Hedeen, Jr.
	Title	FOOTBALL EXHIBITING AN EXTERIOR WAFFLE PATTERN
	Atty Docket Number	PTP-19017/01

ADDRESS TO:
MS Expedited Design
Commissioner for Patents
P.O. Box 1450
Alexandria, VA 22313-1450

This is a request for expedited examination of a design application under 37 CFR 1.155.

NOTE: If the Request made by this form accompanies original application papers, include form PTO/SB/18 "Design Patent Application Transmittal" or its equivalent.

A preexamination search was conducted. The field of search was:

473/599; 473/603; 473/605; D21/707

Related applications: _____

If not previously filed for the above-identified application, the following items required by 37 CFR 1.155 are enclosed:

- Formal drawings (see 37 CFR 1.84).
- The fee set forth in 37 CFR 1.17(k).
- An information disclosure statement in compliance with 37 CFR 1.98.

9-1-06
Approved
Jacqueline M. Stone
Jacqueline M. Stone, Director
Technology Center 1700/2900

Signature — August 18, 2006 (Date)

Douglas J. McEvoy (Typed or printed name) — 34,385 (Registration Number, if applicable)

(248) 647-6000 (Telephone Number)

UNITED STATES PATENT AND TRADEMARK OFFICE

Commissioner for Patents
United States Patent and Trademark Office
P.O. Box 1450
Alexandria, VA 22313-1450
www.uspto.gov

GARCIA-ZAMOR INTELLECTUAL PROPERTY LAW
ATTN: RUY GARCIA-ZAMOR
12960 LINDEN CHURCH ROAD
CLARKSVILLE, MD 21029

COPY MAILED

JAN 07 2009

In re Application of :
Donna Roth, et al. :
Application No. 29/248,533 : ON PETITION
Filed: August 21, 2006 :
Attorney Docket No. CGI2-PT014.6 :

This is a decision on the petition under 37 CFR 1.137(b), filed October 10, 2008, to revive the above-identified design application.

The petition is **GRANTED**.

The application became abandoned for failure to timely pay the issue fee and submit corrected drawings on or before September 15, 2008, as required by the Notice of Allowance and Fee(s) Due and Notice of Allowability, mailed June 13, 2008. Accordingly, the date of abandonment of this application is September 14, 2008. A Notice of Abandonment was mailed on October 6, 2008. On October 10, 2008, the present petition was filed.

The petition, as supplemented on October 21, 2008, satisfies the requirements of 37 CFR 1.137(b) in that petitioner has supplied (1) the reply in the form of the $430 issue fee and replacement drawings, (2) the petition fee of $810, (3) an adequate statement of unintentional delay, and (4) a terminal disclaimer and fee as required by 37 CFR 1.137(d).

The terminal disclaimer filed October 21, 2008 is accepted and has been made of record. Any continuing application filed from this application must contain a copy of the terminal disclaimer. The copy of the terminal disclaimer must be filed with a cover letter requesting the terminal disclaimer be recorded on the continuing application. A copy of this decision should be attached to the cover letter.

The application is being referred to the Office of Data Management to oversee a review of the drawings and to be processed into a patent.

Telephone inquires related to this decision should be directed to the undersigned at (571) 272-3204. Telephone inquiries related to processing as a patent should be directed to (571) 272-4200.

Sherry D. Brinkley
Petitions Examiner
Office of Petitions

UNITED STATES PATENT AND TRADEMARK OFFICE

Commissioner for Patents
United States Patent and Trademark Office
P.O. Box 1450
Alexandria, VA 22313-1450
www.uspto.gov

SCHWEGMAN, LUNDBERG & WOESSNER, P.A.
P.O. BOX 2938
MINNEAPOLIS MN 55402

COPY MAILED

JUL 07 2008

In re Application of :
Reed et al. :
Application No.: 29/248584 : ON PETITION
Filing or 371(c) Date: 08/22/2006 :
Title of Invention: CONTAINER CAP :

This is a decision on the Petition Under 37 C.F.R. § 1.181 to Withdrawal Holding of Abandonment, filed May 29, 2008.

This Petition is hereby **granted**.

The above-identified application became abandoned for failure to timely and properly reply to the Notice of Allowance and Issue Fee Due, and Notice of Allowability, both Notices were mailed December 27, 2006. The Notices set a non-extendable three (3) month period for reply. No reply having been received, the application became abandoned on March 28, 2007. A Notice of Abandonment was mailed April 23, 2007.

Applicant files the present petition and asserts that a Continued Prosecution Application ("CPA") was timely filed on March 23, 2007.

A review of the application file reveals that Applicant is correct, a CPA was timely filed on March 23, 2007.

In view of the foregoing, the petition is granted. The holding of abandonment is hereby withdrawn.

The application will be referred to Technology Center Art Unit 2915 for processing of the CPA.

Telephone inquiries concerning this matter should be directed to the undersigned at (571) 272-3232.

Derek L. Woods
Attorney
Office of Petitions

UNITED STATES PATENT AND TRADEMARK OFFICE

Commissioner for Patents
United States Patent and Trademark Office
P.O. Box 1450
Alexandria, VA 22313-1450
www.uspto.gov

CROSSLEY PATENT LAW
400 SOUTH THIRD STREET
MONTROSE, CO 81401

COPY MAILED

DEC 0 3 2007

OFFICE OF PETITIONS

In re Application of :
Carol J. O'Gradney :
Application No. 29/248,586 : ON PETITION
Filed: August 23, 2006 :
Attorney Docket No. 06-08-02DA :

This is a decision on the petition under 37 CFR 1.137(b), filed on November 6, 2007, to revive the above-identified application.

The application became abandoned for failure to timely respond to the Notice of Allowance and Fee(s) Due mailed April 10, 2007. A Notice of Abandonment was mailed on August 6, 2007.

The petition satisfies the requirements of 37 CFR 1.137(b), in that, petitioner has supplied (1) the reply in the form of $410 for payment of the issue fee and $130 for the filing of a terminal disclaimer; (2) the petition fee of $770; and (3) a proper statement of unintentional delay. Therefore, the petition is **GRANTED**.

The terminal disclaimer under 37 CFR 1.137(d), filed November 6, 2007, has been accepted and made of record.

This application file is being referred to the Office of Data Management for further processing into a patent.

Telephone inquiries concerning this decision should be directed to the undersigned at (571) 272-3226.

Andrea Smith
Petitions Examiner
Office of Petitions

UNITED STATES PATENT AND TRADEMARK OFFICE

Commissioner for Patents
United States Patent and Trademark Office
P.O. Box 1450
Alexandria, VA 22313-1450
www.uspto.gov

INTERNATIONAL TRUCK INTELLECTUAL PROPERTY COMPANY
4201 WINFIELD ROAD
PO BOX 1488
WARRENVILLE IL 60555

COPY MAILED

MAY 0 2 2007

OFFICE OF PETITIONS

In re Application of	:	
Brown, et al.	:	DECISION ACCORDING STATUS
Application No. 29/248,628	:	UNDER 37 CFR 1.47(a)
Filed: August 24, 2006	:	
Attorney Docket No. D5936	:	

This is in response to the petition under 37 CFR 1.47(a), filed March 26, 2007.

The petition under 37 CFR 1.47(a) is **GRANTED**.

Petitioner has shown that inventor Steven Brown orally refused to execute the oath or declaration after having been presented with the application papers.

The above-identified application and papers have been reviewed and found to be in compliance with 37 CFR 1.47(a). Accordingly, the above-identified application is hereby accorded Rule 1.47(a) status. As provided in 37 CFR 1.47(c), this Office will forward notice of this application's filing to the non-signing inventor at the last known address provided on the declaration. Notice of the filing of this application will also be published in the Official Gazette.

The matter is being forwarded to Group Art Unit 2913 for docketing and examination in due course.

Telephone inquiries related to this decision may be directed to the undersigned at (571)272-3207.

Cliff Congo
Petitions Attorney
Office of Petitions

UNITED STATES PATENT AND TRADEMARK OFFICE

Commissioner for Patents
United States Patent and Trademark Office
P.O. Box 1450
Alexandria, VA 22313-1450
www.uspto.gov

STEVEN D BROWN
5878 LOCHLEVEN DR
WATERFORD MI 48327

COPY MAILED

MAY 02 2007

OFFICE OF PETITIONS

In re Application of :
Steven D. Brown, Zachary B. Beard, :
Jenny Lynn Cargiuolo, Lisa C. :
Troutman, David L. Maher, Kwan W. Lee, :
Samuel Wagoner, Kurt A. Ringger, Mark : LETTER
Cappai :
Application No. 29/248,628 :
Filed: August 24, 2006
Title: Crescent Couch and Bunk of a
Truck Vehicle

Dear Mr. Brown:

You are named as a joint inventor in the above-identified United States patent application filed under the provisions of 35 USC 116 (United States Code) and 37 CFR 1.47(a), Rules of Practice in Patent Cases. Should a patent be granted on the application you will be designated therein as a joint inventor.

As a joint inventor, you are entitled to inspect any paper in the file wrapper of the application, order copies of all or any part thereof (at a prepaid cost per 37 CFR 1.19) or make your position of record in the application. Alternatively, you may arrange to do any of the preceding through a registered patent attorney or agent presenting written authorization from you. If you care to join the application, agent of record would presumably assist you. Joining in the application would entail the filing of an appropriate oath or declaration by you pursuant to 37 CFR 1.63.

Telephone inquiries regarding this communication should be directed to Petitions Attorney Cliff Congo at (571)272-3207. Requests for information regarding your application should be directed to the File Information Unit at (703) 308-2733. Information regarding how to pay for and order a copy of the application, or a specific paper in the application, should be directed to the Certification Division at (703) 308-9726 or 1-800-972-6382 (outside the Washington D.C. area).

Cliff Congo
Petitions Attorney
Office of Petitions

UNITED STATES PATENT AND TRADEMARK OFFICE

COMMISSIONER FOR PATENTS
UNITED STATES PATENT AND TRADEMARK OFFICE
P.O. BOX 1450
ALEXANDRIA, VA 22313-1450
www.uspto.gov

SCHWEGMAN, LUNDBERG & WOESSNER, P.A.
P.O. BOX 2938
MINNEAPOLIS, MN 55402

COPY MAILED

JUL 23 2008

In re Application of :
Timothy Giordon Lange :
Application No. 29/248,631 : ON PETITION
Filed: August 24, 2006 :
Attorney Docket No. 1425.214US1 :

This is a decision on the petition under 37 CFR 1.137(b) to revive the above-identified application, filed May 19, 2008.

The petition is GRANTED.

This application became abandoned for failure to timely pay the issue fees on or before February 2, 2008, as required by the Notice of Allowance and Fee(s) Due, mailed November 20, 2007. A Notice of Abandonment was mailed on March 19, 2008. In response, on May 19, 2008, the present petition was filed.

The petition is not signed by a registered attorney or agent of record. However, in accordance with 37 CFR 1.34(a), the signature of Gerald L. Fellows appearing on the petition shall constitute a representation to the United States Patent and Trademark Office that he is authorized to represent the particular party on whose behalf he acts. A courtesy copy of this decision is being mailed to petitioner. If Mr. Fellows desires to receive future correspondence regarding this application, then the appropriate power of attorney or authorization of agent must be submitted. All future correspondence regarding this application file will be directed solely to the address of record.

The petition satisfies the requirements of 37 CFR 1.137(b) in that petitioner has supplied (1) the reply in the form of payment of the issue fee of $820, (2) the petition fee of $1,540, (3) an adequate statement of unintentional delay[1], and (4) a terminal disclaimer and fee as required by 37 CFR 1.137(d).

The terminal disclaimer filed May 19, 2008 is accepted and has been made of record. Any continuing application filed from this application must contain a copy of the terminal disclaimer. The copy of the terminal disclaimer must be filed with a cover letter requesting the terminal

[1] 37 CFR 1.137(b)(3) requires a statement that the entire delay in filing the required reply from the due date for the reply until the filing of a grantable petition pursuant to 37 CFR 1.137(b) was unintentional. While the statement is not made by an attorney of record, such statement is being treated as having been made as the result of a reasonable inquiry into the facts and circumstances of such delay. See 37 CFR 10.18(b) and Changes to Patent Practice and Procedure; Final Rule Notice, 62 Fed. Reg. 53131, 53178 (October 10, 1997), 1203 Off. Gaz. Pat. Office 63, 103 (October 21, 1997). In the event that such an inquiry has not been made, petitioner must make such an inquiry. If such inquiry results in the discovery that it is not correct that the entire delay in filing the required reply from the due date for the reply until the filing of a grantable petition pursuant to 37 CFR 1.137(b) was unintentional, petitioner must notify the Office.

disclaimer be recorded on the continuing application. A copy of this decision should be attached to the cover letter.

The application is being referred to the Office of Data Management to be processed into a patent.

Telephone inquires related to this decision should be directed to the undersigned at (571) 272-3204. Telephone inquiries related to processing as a patent should be directed to (571) 272-4200.

Sherry D. Brinkley
Petitions Examiner
Office of Petitions

cc: GERALD L. FELLOWS
GREENBERG TRAURIG LLP
2450 COLORADO AVENUE, SUITE 400E
SANTA MONICA, CA 90404

Application Number	Application/Control No.	Applicant(s)/Patent Under Reexamination
	29/248631	

Document Code - DISQ	Internal Document – DO NOT MAIL

TERMINAL DISCLAIMER	☒ APPROVED	☐ DISAPPROVED
Date Filed: 5/19/08	This patent is subject to a Terminal Disclaimer	

Approved/Disapproved by:
Sherry D. Bonds

IN THE UNITED STATES PATENT AND TRADEMARK OFFICE

Serial Number: 29/248641
Confirmation Number:
Filing Date: 08-25-06
Applicant: Miller
Title: Motorcycle lower side shields
Docket Number: 06042-DPA
Examiner:
Art Unit: 2913
Customer Number: 56,758

PETITION TO MAKE SPECIAL BECAUSE OF APPLICANT'S AGE
(37 CFR 1.102(c) and MPEP §708.02 IV)

Commissioner for Patents

Dear Sir:

Applicant hereby petitions to make this application special because applicant is over 65 years of age. No fee is required with this petition in accordance with 37 CFR §1.102(c). As a showing of Applicant's age, accompanying this Petition is a copy of M. Valen Miller's birth certificate showing his birth date, which indicates that inventor M. Valen Miller is older than 65 years as of the filing date of the Application.

It is respectfully submitted that the claims of the subject Application are directed toward a single invention. Applicant has made a pre-examination search of U.S. Class D12 in subclasses 126 and 186, and the located references are provided on the Information Disclosure Statement submitted with the Application. None of the located references substantially resemble the invention as disclosed in the Application.

Knox Patents: Kulaga Law Office, PLLC
P.O. Box 30034
Knoxville, Tennessee 37930-0034
865-470-4212 (voice)
866-481-1019 (FAX)
tkulaga@knoxpatents.com

Respectfully submitted,

Thomas A Kulaga

Thomas A. Kulaga
Registration No. 46,844

PETITION GRANTED

William Krynski
Special Program Examiner
Technology Center 1700
OCT 16 2006

UNITED STATES PATENT AND TRADEMARK OFFICE

Commissioner for Patents
United States Patent and Trademark Office
P.O. Box 1450
Alexandria, VA 22313-1450
www.uspto.gov

WORKMAN NYDEGGER
60 EAST SOUTH TEMPLE
1000 EAGLE GATE TOWER
SALT LAKE CITY, UT 84111

COPY MAILED

AUG 0 1 2008

OFFICE OF PETITIONS

In re Application of	:	
Bruce RAILE	:	
Application No. 29/248,659	:	DECISION ON PETITION
Filed: August 25, 2006	:	
Attorney Docket No. 14301-49.2	:	

This is a decision on the petition under the unintentional provisions of 37 CFR 1.137(b), filed May 9, 2008, to revive the above-identified design application.

The petition is **GRANTED**.

The application became abandoned for failure to submit corrected drawings in a timely manner in reply to the Notice of Allowability, mailed November 15, 2007, which set a period for reply of three (3) months. Accordingly, this application became abandoned on February 16, 2008.

The petition satisfies the requirements of 37 CFR 1.137(b) in that petitioner has supplied (1) the reply in the form of corrected drawings; (2) the petition fee of $770; (3) a proper statement of unintentional delay; and (4) a terminal disclaimer and fee as required by 37 CFR 1.137(d).

The terminal disclaimer is accepted and has been made of record.

Telephone inquiries concerning this decision should be directed to Diane Goodwyn at (571)272-6735.

This application is being referred to the Office of Data Management for processing into a patent.

Thurman K Page

Thurman Page
Petitions Examiner
Office of Petitions

Copied from 29249659 on 08/06/2008

PTO/SB/63 (12-07)
Approved for use through 12/31/2007. OMB 0651-0031
U.S. Patent and Trademark Office; U.S. DEPARTMENT OF COMMERCE
Under the Paperwork Reduction Act of 1995, no persons are required to respond to a collection of information unless it displays a valid OMB control number.

TERMINAL DISCLAIMER TO ACCOMPANY PETITION

Docket Number (Optional)
14301.49.2

In re Application of:

Name: **Bruce Raile**

Application Number: **29/248,659**

Filed: **August 25, 2008**

For: **EYEGLASS CASE**

Adjustment date: 08/01/2008 CKHLOK
05/09/2008 INTEFSW 00006514 29248659
01 FC:2051 -65.00 OP

08/01/2008 CKHLOK 00000012 29248659
01 FC:2814 65.00 OP

The owner*, Sun Optics, Inc. of 100% percent interest in the above-identified application hereby disclaims a terminal part of the term of any patent granted the above-identified application equivalent to: (1) if the above-identified application is a design application, the period of abandonment of the above-identified application, and (2) if the above-identified application is a utility or plant application, the lesser of: (a) the period of abandonment of the application; or (b) the period extending beyond twenty years from the date on which the above-identified application was filed in the United States or, if the application contains a specific reference to an earlier filed application(s) under 35 U.S.C. 120, 121, or 365(c), from the date on which the earliest such application was filed. This disclaimer also applies to any patent granted on a utility or plant application filed before June 8, 1995, or a design application, that contains a specific reference under 35 U.S.C. 120, 121, or 365(c) to the above-identified application. This disclaimer is binding upon the grantee, and its successors or assigns.

Check either box 1 or 2 below, if appropriate.

1. ☐ For submissions on behalf of an organization (e.g., corporation, partnership, university, government agency, etc.), the undersigned is empowered to act on behalf of the organization.

2. ☒ The undersigned is an attorney or agent of record. Registration Number 40,831

John C. Stringham
Signature

May 9, 2008
Date

John C. Stringham
Typed or Printed Name

(801) 533-9800
Telephone Number

☒ Terminal disclaimer fee under 37 CFR 1.20(d) included.

WARNING: Information on this form may become public. Credit card information should not be included on this form. Provide credit card information and authorization on PTO-2038.

* Statement under 37 CFR 3.73(b) is required if terminal disclaimer is signed by the assignee (owner). Form PTO/SB/96 may be used for making this certification. See MPEP § 324.

This collection of information is required by 37 CFR 1.137. The information is required to obtain or retain a benefit by the public which is to file (and by the USPTO to process) an application. Confidentiality is governed by 35 U.S.C. 122 and 37 CFR 1.11 and 1.14. This collection is estimated to take 12 minutes to complete, including gathering, preparing, and submitting the completed application form to the USPTO. Time will vary depending upon the individual case. Any comments on the amount of time you require to complete this form and/or suggestions for reducing this burden, should be sent to the Chief Information Officer, U.S. Patent and Trademark Office, U.S. Department of Commerce, P.O. Box 1450, Alexandria, VA 22313-1450. DO NOT SEND FEES OR COMPLETED FORMS TO THIS ADDRESS. **SEND TO: Commissioner for Patents, P.O. Box 1450, Alexandria, VA 22313-1450.**

If you need assistance in completing the form, call 1-800-PTO-9199 and select option 2.

Copied from 29249659 on 08/06/2008

PTO/SB/27 (09-04)
Approved for use through 07/31/2006. OMB 0651-0031
U.S. Patent and Trademark Office; U.S. DEPARTMENT OF COMMERCE
Under the Paperwork Reduction Act of 1995, no persons are required to respond to a collection of information unless it displays a valid OMB control number.

REQUEST FOR EXPEDITED EXAMINATION OF A DESIGN APPLICATION (37 CFR 1.155)

Application Number	TBA 29/248 674
Filing Date	August 28, 2006
First Named Inventor	Jennifer L. Sadler
Title	Transitional Image For A Portion Of A Display Screen
Atty Docket Number	013797.02444

ADDRESS TO:
MAIL STOP EXPEDITED DESIGN
COMMISSIONER FOR PATENTS
P.O. Box 1450
Alexandria, VA 22313-1450

Approved
Jacqueline M. Stone
Jacqueline M. Stone, Director
Technology Center 1700/2900
10/27/06

This is a request for expedited examination of a design application under 37 CFR 1.155.

NOTE: If the Request made by this form accompanies original application papers, include form PTO/SB/18 "Design Patent Application Transmittal" or its equivalent.

A preexamination search was conducted. The field of search was:

Class 345 (subclasses 683, 902); Class 715 (subclasses 764, 771, 773, 775, 776, 835, 836, 837, 838, 839, 846, 976); Class D14 (subclasses 374, 485, 486, 487, 488, 489, 490, 491, 492, 493, 494, 495); Class D18 (subclasses 24, 25, 26, 27, 28, 29, 30, 31, 32, 33) Class D19 (subclasses 6, 7), Class D20 (subclasses 11, 18); Class D21 (subclasses 324, 325, 326, 327, 328, 329, 330, 331, 332, 333)

Related applications Attorney Docket Nos.:

If not previously filed for the above-identified application, the following items required by 37 CFR 1.155 are enclosed:
Formal drawings (see 37 CFR 1.84).
The fee set forth in 37 CFR 1.17(k).
An information disclosure statement in compliance with 37 CFR 1.98.

/John M. Fleming/	August 28, 2006
Signature	Date
John M. Fleming	56,536
Typed or printed name	Registration Number, if applicable
(202) 824-3000	
Telephone Number	

WARNING: Information on this form may become public. Credit card information should not be included on this form. Provide credit card information and authorization on PTO-2038.

This collection of information is required by 37 CFR 1.155. The information is required to obtain or retain a benefit by the public which is to file (and by the USPTO to process) an application. Confidentiality is governed by 35 U.S.C. 122 and 37 CFR 1.11 and 1.14. This collection is estimated to take 6 minutes to complete, including gathering, preparing, and submitting the completed application form to the USPTO. Time will vary depending upon the individual case. Any comments on the amount of time you require to complete this form and/or suggestions for reducing this burden, should be sent to the Chief Information Officer, U.S. Patent and Trademark Office, U.S. Department of Commerce, P.O. Box 1450, Alexandria, VA 22313-1450. DO NOT SEND FEES OR COMPLETED FORMS TO THIS ADDRESS. **SEND TO: Mail Stop Expedited Design, Commissioner for Patents, P.O. Box 1450, Alexandria, VA 22313-1450.**
If you need assistance in completing the form, call 1-800-PTO-9199 and select option 2.

UNITED STATES PATENT AND TRADEMARK OFFICE

Commissioner for Patents
United States Patent and Trademark Office
P.O. Box 1450
Alexandria, VA 22313-1450
www.uspto.gov

Trojan Law Offices
9250 Wilshire Boulevard
Suite 325
Beverly Hills, CA 90212

COPY MAILED

JUN 20 2008

OFFICE OF PETITIONS

In re Application of :
Jay Victor :
Application No. 29/248,683 : DECISION ON PETITION
Filed: August 28, 2006 :
Attorney Docket No. R06-08-2999 :

This is a decision on the petition under the unintentional provisions of 37 CFR 1.137(b), filed April 28, 2008, to revive the above-identified application.

The petition is **GRANTED**.

This application became abandoned for failure to timely submit corrected drawings within three (3) months of the Notice of Allowability mailed May 4, 2007. Accordingly, the date of abandonment of this application is August 5, 2007. A Notice of Abandonment was mailed on September 24, 2007.

The petition satisfies the requirements of 37 CFR 1.137(b) in that petitioner has supplied (1) the reply in the form of replacement drawings (2) the petition fee of $770, (3) a proper statement of unintentional delay, and (4) a terminal disclaimer and fee as required by 37 CFR 1.137(d). Accordingly, the replacement drawings is accepted as being unintentionally delayed.

The terminal disclaimer is accepted and has been made of record. Any continuing application filed from this application must contain a copy of the terminal disclaimer. The copy of the terminal disclaimer must be filed with a cover letter requesting the terminal disclaimer be recorded on the continuing application. A copy of this decision should be attached to the cover letter.

Telephone inquiries concerning this decision should be directed to Kimberly Inabinet at (571) 272-4618.

This application is being referred to the Office of Data Management for further processing into a patent.

Carl Friedman
Petitions Examiner
Office of Petitions

UNITED STATES PATENT AND TRADEMARK OFFICE

COMMISSIONER FOR PATENTS
UNITED STATES PATENT AND TRADEMARK OFFICE
P.O. BOX 1450
ALEXANDRIA, VA 22313-1450
www.uspto.gov

COPY MAILED

JUL 31 2007

OFFICE OF PETITIONS

HAMILTON & TERRILE, LLP
P.O. BOX 203518
AUSTIN, TX 78720

In re Application of
Michael Smith, Gadi Amit, Kuoyong Huang and
Michael Massuco
Application No. 29/248,691
Filed: August 29, 2006
Attorney Docket No. DC-11613

DECISION ACCORDING STATUS
UNDER 37 CFR 1.47(a)

This is a decision in response to the communication filed November 13, 2006, which is being treated as a petition under 37 CFR 1.47(a). The $200 petition fee is being charged counsel's as authorized.

The petition is **GRANTED.**

The above-identified application was filed on August 29, 2006. The filing included a declaration under 37 CFR 1.63, executed by joint inventors Smith, Amit and Massuco on behalf of themselves and joint inventor Huang. On September 11, 2006, a Notice to File Missing Parts of Nonprovisional Application (Notice) was mailed, indicating that a fully executed oath or declaration and the associated surcharge were required. The Notice set a two-month period for response. On November 13, 2006, the present petition was filed.

By declaration of facts of Attorney Robert Holland, petitioner has shown that a true copy of the application papers were presented to inventor Huang by e-mail. Petitioner submits a copy of the e-mail, including a response by inventor Huang, that supports the conclusion that he was able to read and review the application papers. Accordingly, petitioner has shown that the non-signing inventor has, by his conduct in not responding, refused to join in the filing of the above-identified application. The last known address is deemed to be as stated on the declaration filed August 29, 2006.

The application and papers have been reviewed and found in compliance with 37 CFR 1.47(a). This application is hereby accorded Rule 1.47(a) status.

As provided in 37 CFR 1.47(c), this Office will forward notice of this application's filing to the non-signing inventor at the address stated on the declaration filed August 29, 2006. Notice of the filing of this application will also be published in the Official Gazette.

This application is being referred to the Technology Center Art Unit 2914 for examination in due course.

Telephone inquiries regarding this decision should be directed to the undersigned at (571) 272-3204.

Sherry D. Brinkley
Petitions Examiner
Office of Petitions

UNITED STATES PATENT AND TRADEMARK OFFICE

Commissioner for Patents
United States Patent and Trademark Office
P.O. Box 1450
Alexandria, VA 22313-1450
www.uspto.gov

QUARLES & BRADY LLP
411 E. WISCONSIN AVENUE
SUITE 2040
MILWAUKEE WI 53202-4497

COPY MAILED

DEC 2 0 2007

OFFICE OF PETITIONS

In re Application of :
Joseph E. Braun et al. :
Application No. 29/248,714 : ON PETITION
Filed: August 30, 2006 :
Attorney Docket No. 920002.00029 :

This is a decision on the petition under 37 CFR 1.137(b), filed November 16, 2007, to revive the above-identified application.

The petition is **DISMISSED**.

Any request for reconsideration of this decision must be submitted within TWO (2) MONTHS from the mail date of this decision. Extensions of time under 37 CFR 1.136(a) are permitted. The reconsideration request should include a cover letter entitled "Renewed Petition under 37 CFR 1.137(b)." This is **not** a final agency action within the meaning of 5 U.S.C. § 704.

The above-identified application became abandoned for failure to submit corrected drawings in a timely manner in reply to the Notice of Allowance/Allowability mailed June 26, 2007 which set a shortened statutory period for reply of three (3) months. Accordingly, by operation of law, the above-identified application became abandoned on September 27, 2007.

A grantable petition under 37 CFR 1.137(b) must be accompanied by: (1) the required reply, unless previously filed; (2) the petition fee as set forth in 37 CFR 1.17(m); (3) a statement that the entire delay in filing the required reply from the due date for the reply until the filing of a grantable petition pursuant to 37 CFR 1.137(b) was unintentional; and (4) any terminal disclaimer (and fee as set forth in 37 CFR 1.20(d)) required by 37 CFR 1.137(d). Where there is a question as to whether either the abandonment or the delay in filing a petition under 37 CFR 1.137 was unintentional, the Commissioner may require additional information. See MPEP 711.03(c)(II)(C) and (D). The instant petition lacks item(s) (4). Applicants have not filed the required terminal disclaimer for design applications.

Further correspondence with respect to this matter should be addressed as follows:

By Mail:
Mail Stop PETITION
Commissioner for Patents
P. O. Box 1450
Alexandria, VA 22313-1450

By hand:
U. S. Patent and Trademark Office
Customer Service Window, Mail Stop Petitions
Randolph Building
401 Dulany Street
Alexandria, VA 22314

The centralized facsimile number is **(571) 273-8300.**

Telephone inquiries concerning this decision should be directed to the Carl Friedman at (571) 272-6842.

David Bucci
Petitions Examiner
Office of Petitions

UNITED STATES PATENT AND TRADEMARK OFFICE

Commissioner for Patents
United States Patent and Trademark Office
P.O. Box 1450
Alexandria, VA 22313-1450
www.uspto.gov

QUARLES & BRADY LLP
411 E. WISCONSIN AVENUE
SUITE 2040
MILWAUKEE WI 53202-4497

COPY MAILED

MAY 20 2008

OFFICE OF PETITIONS

In re Application of :
Joseph E. Braun et al. :
Application No. 29/248,714 : ON PETITION
Filed: August 30, 2006 :
Attorney Docket No. 920002.00029 :

This is a decision on the Renewed petition under 37 CFR 1.137(b), filed January 11, 2008, to revive the above-identified application.

The petition is **GRANTED**.

The above-identified application became abandoned for failure to submit corrected drawings in a timely manner in reply to the Notice of Allowance/Allowability mailed June 26, 2007, which set a statutory period for reply of three (3) months. Accordingly, by operation of law, the above-identified application became abandoned on September 27, 2007.

The petition decision mailed December 20, 2007 dismissed the petition filed November 11, 2007, noting that the requirements of 37 CFR 1.137(b)(4) terminal disclaimer and fee was lacking.

The instant renewed petition includes the required terminal disclaimer.

The petition satisfies the conditions for revival pursuant to the provisions of 37 CFR 1.137(b) in that (1) the reply in the form of corrected drawings; (2) the petition fee of $770; (3) the required statement of unintentional delay; and (4) the terminal disclaimer and fee have been received. Accordingly, the corrected drawings are accepted as having been unintentionally delayed.

Telephone inquiries concerning this decision should be directed to Carl Friedman at (571) 272-6842.

The application file is being referred to the Office of Data Management.

for David Bucci
Petitions Examiner
Office of Petitions

UNITED STATES PATENT AND TRADEMARK OFFICE

Commissioner for Patents
United States Patent and Trademark Office
P.O. Box 1450
Alexandria, VA 22313-1450
www.uspto.gov

SOCAL IP LAW GROUP LLP
310 N. WESTLAKE BLVD. STE 120
WESTLAKE VILLAGE CA 91362

COPY MAILED

AUG 22 2007

OFFICE OF PETITIONS

In re Application of :
MULLER, Carl :
Application No. 29/248,735 : DECISION ON PETITION
Filed: August 30, 2006 : TO WITHDRAW
Attorney Docket No. M009-P06438uS : FROM RECORD

This is a decision on the Request to Withdraw as attorney or agent of record under 37 C.F.R. § 1.36(b), filed April 10, 2007.

The request is **NOT APPROVED.**

A grantable request to withdraw as attorney/agent of record must be signed by every attorney/agent seeking to withdraw or contain a clear indication that one attorney is signing on behalf of another/others. A request to withdraw will not be approved unless at least 30 (thirty) days would remain between the date of approval and the later of the expiration date of a time to file a response or the expiration date of the maximum time period which can be extended under 37 C.F.R. § 1.136(a).

The Office cannot approve the request at this time since the reasons provided do not meet any of the conditions under the mandatory or permissive categories enumerated in 37 CFR 10.40. Section 10.40 of Title 37 of the Code of Federal Regulation states, "[a] practitioner shall not withdraw from employment in a proceeding before the Office without permission from the Office[.]" More specifically, 37 CFR 10.40 states, "[i]f paragraph (b) of this section is not applicable, a practitioner may not request permission to withdraw in matter pending before the Office unless such request or such withdrawal is" for one the permissive reasons listed in 37 CFR 10.40(c). The reasons set forth in the request "termination of attorney-client relationship" does not meet any of the conditions set forth in 37 CFR 10.40.

All future communications from the Office will continue to be directed to the above-listed address until otherwise notified by applicant.

Telephone inquiries concerning this decision should be directed to the undersigned at 571-272-7253.

Monica A. Graves
Petitions Examiner
Office of Petitions

cc: ELITE MFG. CORP.
12143 ALTAMAR PLACE
SANTA FE SPRINGS, CA 90670

UNITED STATES PATENT AND TRADEMARK OFFICE

Commissioner for Patents
United States Patent and Trademark Office
P.O. Box 1450
Alexandria, VA 22313-1450
www.uspto.gov

SOCAL IP LAW GROUP, LLP
310 WESTLAKE BOULEVARD, SUITE 120
WESTLAKE VILLAGE, CA 91362

COPY MAILED

MAR 0 4 2008

OFFICE OF PETITIONS

In re Application of :
MULLER, Carl :
Application No. 29/248,735 : DECISION ON PETITION
Filed: August 30, 2006 : TO WITHDRAW
Attorney Docket No. **278-20-001** : FROM RECORD
:

This is a decision on the renewed Request to Withdraw as attorney or agent of record under 37 C.F.R. § 1.36(b), filed August 28, 2007.

The request is **NOT APPROVED** as moot.

A review of the file record indicates that the power of attorney to **SOCAL IP LAW GROUP, LLP** has been revoked by the assignee of the patent application on August 24, 2007. Accordingly, the request to withdraw under 37 C.F.R. § 1.36(b) is moot.

All future communications from the Office will continue to be directed to the below-listed address until otherwise notified by applicant.

Telephone inquires concerning this decision should be directed to the undersigned at 571-272-7253.

Monica A. Graves
Petitions Examiner
Office of Petitions

cc: **MARVIN E. JACOBS, ESQ.**
1767 MARISOL DRIVE
VENTURA, CA 93001

UNITED STATES PATENT AND TRADEMARK OFFICE

Commissioner for Patents
United States Patent and Trademark Office
P.O. Box 1450
Alexandria, VA 22313-1450
www.uspto.gov

COPY MAILED

JUN 07 2007

OFFICE OF PETITIONS

SoCal IP Law Group, LLP
310 N. Westlake Boulevard, Ste 120
Westlake Village, CA 91362

In re Application of :

Carl Muller :
Application No. 29/248,736 : DECISION ON PETITION
Filed: August 30, 2006 : TO WITHDRAW
Attorney Docket No. M009-P06439US : FROM RECORD

This is a decision on the Request to Withdraw as attorney or agent of record under 37 C.F.R. § 1.36(b), filed April 10, 2007.

The request is **APPROVED**.

A grantable request to withdraw as attorney/agent of record must be signed by every attorney/agent seeking to withdraw or contain a clear indication that one attorney is signing on behalf of another/others. A request to withdraw will not be approved unless at least 30 (thirty) days would remain between the date of approval and the later of the expiration date of a time to file a response or the expiration date of the maximum time period which can be extended under 37 C.F.R. § 1.136(a).

The request was signed by Steven C. Sereboff on behalf of all attorneys of record who are associated with customer No. 33358. All attorneys/agents associated with the Customer Number 33356 have been withdrawn.

Applicant is reminded that there is no attorney of record at this time.

The correspondence address of record has been changed and the new correspondence address is the address indicated below.

There are no outstanding office actions at this time.

Telephone inquiries concerning this decision should be directed to Kimberly Inabinet at 571-272-4618.

Frances Hicks
Petitions Examiner
Office of Petitions

cc:

Elite Manufacturing Corporation
12143 Altamar Place
Santa Fe Springs, CA 90670

UNITED STATES PATENT AND TRADEMARK OFFICE

UNITED STATES DEPARTMENT OF COMMERCE
United States Patent and Trademark Office
Address: COMMISSIONER FOR PATENTS
P.O. Box 1450
Alexandria, Virginia 22313-1450
www.uspto.gov

APPLICATION NUMBER	FILING OR 371 (c) DATE	FIRST NAMED APPLICANT	ATTY. DOCKET NO./TITLE
29/248,736	08/30/2006	Carl Muller	M009-P06439US

CONFIRMATION NO. 5276

33356
SoCAL IP LAW GROUP LLP
310 N. WESTLAKE BLVD. STE 120
WESTLAKE VILLAGE, CA 91362

OC000000024211008

Date Mailed: 06/04/2007

NOTICE REGARDING CHANGE OF POWER OF ATTORNEY

This is in response to the Power of Attorney filed 04/10/2007.

- The withdrawal as attorney in this application has been accepted. Future correspondence will be mailed to the new address of record. 37 CFR 1.33.

Kimberly Gravinet

Office of Initial Patent Examination (571) 272-4000, or 1-800-PTO-9199
FORMER ATTORNEY/AGENT COPY

UNITED STATES PATENT AND TRADEMARK OFFICE

Commissioner for Patents
United States Patent and Trademark Office
P.O. Box 1450
Alexandria, VA 22313-1450
www.uspto.gov

MARVIN E. JACOBS, ESQ.
1767 MARISOL DRIVE
VENTURA CA 93001

COPY MAILED

MAY 23 2008

In re Application of	:	
Muller, Carl	:	
Application No. 29/248,736	:	DECISION ON PETITION
Filed: August 30, 2006	:	
Attorney Docket No. 278-20-002	:	

This is a decision on the petition under the unintentional provisions of 37 CFR 1.137(b), filed April 28, 2008, to revive the above-identified application.

The petition is **GRANTED**.

The petition satisfies the requirements of 37 CFR 1.137(b) in that petitioner has supplied (1) the reply in the form of an Amendment, (2) the petition fee, (3) a proper statement of unintentional delay, and (4) a terminal disclaimer.

Telephone inquiries concerning this decision should be directed to the undersigned at (571) 272-3206.

This matter is being referred to Technology Center 2913 for further examination on the merits.

Liana Walsh
Petitions Examiner
Office of Petitions

UNITED STATES PATENT AND TRADEMARK OFFICE

Commissioner for Patents
United States Patent and Trademark Office
P.O. Box 1450
Alexandria, VA 22313-1450
www.uspto.gov

SoCal IP Law Group, LLP
310 N. Westlake Boulevard, Ste 120
Westlake Village, CA 91362

COPY MAILED

JUN 07 2007

OFFICE OF PETITIONS

In re Application of :
Carl Muller :
Application No. 29/248,737 : DECISION ON PETITION
Filed: August 30, 2006 : TO WITHDRAW
Attorney Docket No. M009-P06440US : FROM RECORD
:

This is a decision on the Request to Withdraw as attorney or agent of record under 37 C.F.R. § 1.36(b), filed April 10, 2007.

The request is **APPROVED**.

A grantable request to withdraw as attorney/agent of record must be signed by every attorney/agent seeking to withdraw or contain a clear indication that one attorney is signing on behalf of another/others. A request to withdraw will not be approved unless at least 30 (thirty) days would remain between the date of approval and the later of the expiration date of a time to file a response or the expiration date of the maximum time period which can be extended under 37 C.F.R. § 1.136(a).

The request was signed by Steven C. Sereboff on behalf of all attorneys of record who are associated with customer No. 33356. All attorneys/agents associated with the Customer Number 33356 have been withdrawn.

Applicant is reminded that there is no attorney of record at this time.

The correspondence address of record has been changed and the new correspondence address is the address indicated below.

There are no outstanding office actions at this time.

Telephone inquiries concerning this decision should be directed to Kimberly Inabinet at 571-272-4618.

Frances Hicks
Petitions Examiner
Office of Petitions

cc:

Elite Manufacturing Corporation
12143 Altamar Place
Santa Fee Springs, CA 90670

UNITED STATES PATENT AND TRADEMARK OFFICE

UNITED STATES DEPARTMENT OF COMMERCE
United States Patent and Trademark Office
Address: COMMISSIONER FOR PATENTS
P.O. Box 1450
Alexandria, Virginia 22313-1450
www.uspto.gov

APPLICATION NUMBER	FILING OR 371 (c) DATE	FIRST NAMED APPLICANT	ATTY. DOCKET NO./TITLE
29/248,737	08/30/2006	Carl Muller	M009-P06440US

CONFIRMATION NO. 5286

OC000000024211222

33356
SoCAL IP LAW GROUP LLP
310 N. WESTLAKE BLVD. STE 120
WESTLAKE VILLAGE, CA 91362

Date Mailed: 06/04/2007

NOTICE REGARDING CHANGE OF POWER OF ATTORNEY

This is in response to the Power of Attorney filed 04/10/2007.

- The withdrawal as attorney in this application has been accepted. Future correspondence will be mailed to the new address of record. 37 CFR 1.33.

Kimberly Brannett

Office of Initial Patent Examination (571) 272-4000, or 1-800-PTO-9199
FORMER ATTORNEY/AGENT COPY

UNITED STATES PATENT AND TRADEMARK OFFICE

Commissioner for Patents
United States Patent and Trademark Office
P.O. Box 1450
Alexandria, VA 22313-1450
www.uspto.gov

MARVIN E. JACOBS, ESQ.
1767 MARISOL DRIVE
VENTURA CA 93001

COPY MAILED

MAY 23 2008

In re Application of	:	
Muller, Carl	:	
Application No. 29/248,737	:	DECISION ON PETITION
Filed: August 30, 2006	:	
Attorney Docket No. 278-20-003	:	

This is a decision on the petition under the unintentional provisions of 37 CFR 1.137(b), filed April 28, 2008, to revive the above-identified application.

The petition is **GRANTED**.

The petition satisfies the requirements of 37 CFR 1.137(b) in that petitioner has supplied (1) the reply in the form of an Amendment, (2) the petition fee, (3) a proper statement of unintentional delay, and (4) a terminal disclaimer.

Telephone inquiries concerning this decision should be directed to the undersigned at (571) 272-3206.

This matter is being referred to Technology Center 2913 for further examination on the merits.

Liana Walsh
Petitions Examiner
Office of Petitions

UNITED STATES PATENT AND TRADEMARK OFFICE

Commissioner for Patents
United States Patent and Trademark Office
P.O. Box 1450
Alexandria, VA 22313-1450
www.uspto.gov

SoCAL IP LAW GROUP LLP
310 N. WESTLAKE BLVD. STE 120
WESTLAKE VILLAGE CA 91362

COPY MAILED

JUL 05 2007

OFFICE OF PETITIONS

In re Application of :
MULLER, Carl :
Application No. 29/248,738 : DECISION ON PETITION
Filed: August 30, 2006 : TO WITHDRAW
Attorney Docket No. **M009-P06441US** : FROM RECORD

This is a decision on the Request to Withdraw as attorney or agent of record under 37 C.F.R. § 1.36(b), filed April 10, 2007.

The request is **NOT APPROVED**.

A grantable request to withdraw as attorney/agent of record must be signed by every attorney/agent seeking to withdraw or contain a clear indication that one attorney is signing on behalf of another/others. A request to withdraw will not be approved unless at least 30 (thirty) days would remain between the date of approval and the later of the expiration date of a time to file a response or the expiration date of the maximum time period which can be extended under 37 C.F.R. § 1.136(a).

The Office cannot approve the request at this time since the reasons provided do not meet any of the conditions under the mandatory or permissive categories enumerated in 37 CFR 10.40. Section 10.40 of Title 37 of the Code of Federal Regulation states, "[a] practitioner shall not withdraw from employment in a proceeding before the Office without permission from the Office[.]" More specifically, 37 CFR 10.40 states, "[i]f paragraph (b) of this section is not applicable, a practitioner may not request permission to withdraw in matter pending before the Office unless such request or such withdrawal is" for one the permissive reasons listed in 37 CFR 10.40(c). The reasons set forth in the request, (termination of attorney-client relationship), do not meet any the conditions set forth in 37 CFR 10.40.

All future communications from the Office will continue to be directed to the above-listed address until otherwise notified by applicant.

Telephone inquiries concerning this decision should be directed to Michelle R. Eason at 571-272- 4231.

Terri Williams
Petitions Examiner
Office of Petitions

cc: **ELITE MFG. CORP.**
12143 ALTAMAR PLACE
SANTA FE SPRINGS, CA 90670

PTO/SB/27 (05-03)
Approved for use through 04/30/2003. OMB 0651-0031
U.S. Patent and Trademark Office; U.S. DEPARTMENT OF COMMERCE
Under the Paperwork Reduction Act of 1995, no persons are required to respond to a collection of information unless it displays a valid OMB control number.

REQUEST FOR EXPEDITED EXAMINATION OF A DESIGN APPLICATION (37 CFR 1.155)

Application Number	29/248,778
Filing Date	September 1, 2006
First Named Inventor	Thomas Berend
Title	Portion Of A Shoe Upper
Atty Docket Number	015127.00809

HAND DELIVER TO THE DESIGN GROUP DIRECTOR'S OFFICE
-or- ADDRESS TO:
MAIL STOP EXPEDITED DESIGN
COMMISSIONER FOR PATENTS
P.O. Box 1450
Alexandria, VA 22313-1450

This is a request for expedited examination of a design application under 37 CFR 1.155.

NOTE: If the Request made by this form accompanies original application papers, include form PTO/SB/18 "Design Patent Application Transmittal" or its equivalent.

A preexamination search was conducted. The field of search was:

Class D2/896, 902, 907, 908, 943, 944, 945, 946, 969, 972, 973 and 974.

Related applications:

If not previously filed for the above-identified application, the following items required by 37 CFR 1.155 are enclosed:

The fee set forth in 37 CFR 1.17(k).

An information disclosure statement in compliance with 37 CFR 1.98.

9-21-06
Approved
Jacqueline M. Stone
Jacqueline M. Stone, Director
Technology Center 1700/2900

September 8, 2006 — Date

/H. Wayne Porter/ — Signature

202-824-3000 — Telephone Number

H. Wayne Porter, Reg. No. 42,084 — Typed or printed name

WARNING: Information on this form may become public. Credit card information should not be included on this form. Provide credit card information and authorization on PTO-2038.

This collection of information is required by 37 CFR 1.155. The information is required to obtain or retain a benefit by the public which is to file (and by the USPTO to process) an application. Confidentiality is governed by 35 U.S.C. 122 and 37 CFR 1.14. This collection is estimated to take 6 minutes to complete, including gathering, preparing, and submitting the completed application form to the USPTO. Time will vary depending upon the individual case. Any comments on the amount of time you require to complete this form and/or suggestions for reducing this burden, should be sent to the Chief Information Officer, U.S. Patent and Trademark Office, U.S. Department of Commerce, P.O. Box 1450, Alexandria, VA 22313-1450. DO NOT SEND FEES OR COMPLETED FORMS TO THIS ADDRESS. **SEND TO: Mail Stop Expedited Design, Commissioner for Patents, P.O. Box 1450, Alexandria, VA 22313-1450.**

If you need assistance in completing the form, call 1-800-PTO-9199 and select option 2.

UNITED STATES PATENT AND TRADEMARK OFFICE

Commissioner for Patents
United States Patent and Trademark Office
P.O. Box 1450
Alexandria, VA 22313-1450
www.uspto.gov

COPY MAILED

JAN 16 2007

OFFICE OF PETITIONS

HAMILTON & TERRILE LLP
PO BOX 203518
AUSTIN TX 78720

In re Application of	:	
Smith, et al.	:	DECISION ACCORDING STATUS
Application No. 29/248,834	:	UNDER 37 CFR 1.47(a)
Filed: September 7, 2006	:	
Attorney Docket No. DC-11614	:	

This is in response to the petition under 37 CFR 1.47(a), filed November 13, 2006.

The petition under 37 CFR 1.47(a) is **GRANTED**.

Petitioner has shown that non-signing inventor Huang has refused to sign the declaration after having been presented with the application papers.

The above-identified application and papers have been reviewed and found to be in compliance with 37 CFR 1.47(a). Accordingly, the above-identified application is hereby accorded Rule 1.47(a) status. As provided in 37 CFR 1.47(c), this Office will forward notice of this application's filing to the non-signing inventor at the last known address provided on the declaration. Notice of the filing of this application will also be published in the Official Gazette.

The $200 petition fee has been charged to Deposit Account No. 50-2264, as authorized.

The matter is being forwarded to Group Art Unit 2914 for examination in due course.

Telephone inquiries related to this decision may be directed to the undersigned at (571)272-3207.

Cliff Congo
Petitions Attorney
Office of Petitions

UNITED STATES PATENT AND TRADEMARK OFFICE

Commissioner for Patents
United States Patent and Trademark Office
P.O. Box 1450
Alexandria, VA 22313-1450
www.uspto.gov

KUOYONG HUANG
216 WATER OAK DR
CEDAR PARK TX 78613

COPY MAILED

JAN 16 2007

OFFICE OF PETITIONS

In re Application of
Michael Smith, Gadi Amit, Kuoyong Huang, Michael Massuco
Application No. 29/248,834
Filed: September 7, 2006
Title: Printer Housing

LETTER

Dear Mr. Huang:

You are named as a joint inventor in the above-identified United States patent reissue application filed under the provisions of 35 USC 116 (United States Code) and 37 CFR 1.47(a), Rules of Practice in Patent Cases. Should a patent be granted on the application you will be designated therein as a joint inventor.

As a named inventor you are entitled to inspect any paper in the file wrapper of the application, order copies of all or any part thereof (at a prepaid cost per 37 CFR 1.19) or make your position of record in the application. Alternatively, you may arrange to do any of the preceding through a registered patent attorney or agent presenting written authorization from you. If you care to join the application, agent of record (see below) would presumably assist you. Joining in the application would entail the filing of an appropriate oath or declaration by you pursuant to 37 CFR 1.63.

Telephone inquiries regarding this communication should be directed to Petitions Attorney Cliff Congo at (571)272-3207. Requests for information regarding your application should be directed to the File Information Unit at (703) 308-2733. Information regarding how to pay for and order a copy of the application, or a specific paper in the application, should be directed to the Certification Division at (703) 308-9726 or 1-800-972-6382 (outside the Washington D.C. area).

Cliff Congo
Petitions Attorney
Office of Petitions

PTO/SB/27 (09-04)
Approved for use through 07/31/2006. OMB 0651-0031
U.S. Patent and Trademark Office; U.S. DEPARTMENT OF COMMERCE
Under the Paperwork Reduction Act of 1995, no persons are required to respond to a collection of information unless it displays a valid OMB control number.

REQUEST FOR EXPEDITED EXAMINATION OF A DESIGN APPLICATION (37 CFR 1.155)

Application Number	TBD 29/248,878
Filing Date	09/08/2006
First Named Inventor	Bryan Pieratt et al.
Title	Icon for a Portion of a Display Screen
Atty Docket Number	013797.02463

ADDRESS TO:
MAIL STOP EXPEDITED DESIGN
COMMISSIONER FOR PATENTS
P.O. Box 1450
Alexandria, VA 22313-1450

Approved
Jacqueline M. Stone, Director
Technology Center 1700/2900
9/28/06

This is a request for expedited examination of a design application under 37 CFR 1.155.

NOTE: If the Request made by this form accompanies original application papers, include form PTO/SB/18 "Design Patent Application Transmittal" or its equivalent.

A preexamination search was conducted. The field of search was:

D14 (subclasses 374, 485, 486, 487, 488, 489, 490, 491, 492, 493, 494, 495); D18 (subclasses 24, 25, 26, 27, 28, 29, 30, 31, 32, 33); D19 (subclasses 6, 7); D20 (subclasses 11, 18); D21 subclasses (324, 325, 326, 327, 328, 329, 330, 331, 332, 333); 345 (subclasses 683, 902); and 715 (subclasses 764, 771, 773, 775, 776, 835, 836, 837, 838, 839, 846, 976)

Related applications: ____

If not previously filed for the above-identified application, the following items required by 37 CFR 1.155 are enclosed:
Formal drawings (see 37 CFR 1.84).
The fee set forth in 37 CFR 1.17(k).
An information disclosure statement in compliance with 37 CFR 1.98.

/John M. Fleming/ — Signature

September 8, 2006 — Date

John M. Fleming — Typed or printed name

56,536 — Registration Number, if applicable

(202) 824-3000 — Telephone Number

WARNING: Information on this form may become public. Credit card information should not be included on this form. Provide credit card information and authorization on PTO-2038.

PTO/SB/27 (09-04)
Approved for use through 07/31/2006. OMB 0651-0031
U.S. Patent and Trademark Office; U.S. DEPARTMENT OF COMMERCE
Under the Paperwork Reduction Act of 1995, no persons are required to respond to a collection of information unless it displays a valid OMB control number.

REQUEST FOR EXPEDITED EXAMINATION OF A DESIGN APPLICATION (37 CFR 1.155)

Application Number	TBD 29/248,880
Filing Date	09/08/2006
First Named Inventor	Bryan Pieratt et al.
Title	Icon for a Portion of a Display Screen
Atty Docket Number	013797.02464

ADDRESS TO:
MAIL STOP EXPEDITED DESIGN
COMMISSIONER FOR PATENTS
P.O. Box 1450
Alexandria, VA 22313-1450

This is a request for expedited examination of a design application under 37 CFR 1.155.

NOTE: If the Request made by this form accompanies original application papers, include form PTO/SB/18 "Design Patent Application Transmittal" or its equivalent.

A preexamination search was conducted. The field of search was:

D14 (subclasses 374, 485, 486, 487, 488, 489, 490, 491, 492, 493, 494, 495); D18 (subclasses 24, 25, 26, 27, 28, 29, 30, 31, 32, 33); D19 (subclasses 6, 7); D20 (subclasses 11, 18); D21 subclasses (324, 325, 326, 327, 328, 329, 330, 331, 332, 333); 345 (subclasses 683, 902); and 715 (subclasses 764, 771, 773, 775, 776, 835, 836, 837, 838, 839, 846, 976)

Related applications: ____

If not previously filed for the above-identified application, the following items required by 37 CFR 1.155 are enclosed:
Formal drawings (see 37 CFR 1.84).
The fee set forth in 37 CFR 1.17(k).
An information disclosure statement in compliance with 37 CFR 1.98.

9-21-06
Approved
Jacqueline M. Stone
Jacqueline M. Stone, Director
Technology Center 1700/2900

/John M. Fleming/ — Signature
September 8, 2006 — Date

John M. Fleming — Typed or printed name
56,536 — Registration Number, if applicable

(202) 824-3000
Telephone Number

WARNING: Information on this form may become public. Credit card information should not be included on this form. Provide credit card information and authorization on PTO-2038.

PTO/SB/27 (09-04)
Approved for use through 07/31/2006. OMB 0651-0031
U.S. Patent and Trademark Office; U.S. DEPARTMENT OF COMMERCE
Under the Paperwork Reduction Act of 1995, no persons are required to respond to a collection of information unless it displays a valid OMB control number.

REQUEST FOR EXPEDITED EXAMINATION OF A DESIGN APPLICATION (37 CFR 1.155)

Application Number	TBD 29/248,881
Filing Date	09/08/2006
First Named Inventor	Bryan Pieratt et al.
Title	Icon for a Portion of a Display Screen
Atty Docket Number	013797.02465

ADDRESS TO:
MAIL STOP EXPEDITED DESIGN
COMMISSIONER FOR PATENTS
P.O. Box 1450
Alexandria, VA 22313-1450

Approved
Jacqueline M. Stone
Jacqueline M. Stone, Director
Technology Center 1700/2900
9/28/06

This is a request for expedited examination of a design application under 37 CFR 1.155.

NOTE: If the Request made by this form accompanies original application papers, include form PTO/SB/18 "Design Patent Application Transmittal" or its equivalent.

A preexamination search was conducted. The field of search was:

D14 (subclasses 374, 485, 486, 487, 488, 489, 490, 491, 492, 493, 494, 495); D18 (subclasses 24, 25, 26, 27, 28, 29, 30, 31, 32, 33); D19 (subclasses 6, 7); D20 (subclasses 11, 18); D21 subclasses (324, 325, 326, 327, 328, 329, 330, 331, 332, 333); 345 (subclasses 683, 902); and 715 (subclasses 764, 771, 773, 775, 776, 835, 836, 837, 838, 839, 846, 976)

Related applications: ____

If not previously filed for the above-identified application, the following items required by 37 CFR 1.155 are enclosed:
Formal drawings (see 37 CFR 1.84).
The fee set forth in 37 CFR 1.17(k).
An information disclosure statement in compliance with 37 CFR 1.98.

/John M. Fleming/ — Signature

September 8, 2006 — Date

John M. Fleming — Typed or printed name

56,536 — Registration Number, if applicable

(202) 824-3000 — Telephone Number

WARNING: Information on this form may become public. Credit card information should not be included on this form. Provide credit card information and authorization on PTO-2038.

PTO/SB/27 (09-04)
Approved for use through 07/31/2006. OMB 0651-0031
U.S. Patent and Trademark Office; U.S. DEPARTMENT OF COMMERCE
Under the Paperwork Reduction Act of 1995, no persons are required to respond to a collection of information unless it displays a valid OMB control number.

REQUEST FOR EXPEDITED EXAMINATION OF A DESIGN APPLICATION (37 CFR 1.155)

Application Number	TBD 29/248,884
Filing Date	09/08/2006
First Named Inventor	Bryan Pieratt et al.
Title	Icon for a Portion of a Display Screen
Atty Docket Number	013797.02466

ADDRESS TO:
MAIL STOP EXPEDITED DESIGN
COMMISSIONER FOR PATENTS
P.O. Box 1450
Alexandria, VA 22313-1450

Approved
Jacqueline M. Stone, Director
Technology Center 1700/2900
9/28/06

This is a request for expedited examination of a design application under 37 CFR 1.155.

NOTE: If the Request made by this form accompanies original application papers, include form PTO/SB/18 "Design Patent Application Transmittal" or its equivalent.

A preexamination search was conducted. The field of search was:

D14 (subclasses 374, 485, 486, 487, 488, 489, 490, 491, 492, 493, 494, 495); D18 (subclasses 24, 25, 26, 27, 28, 29, 30, 31, 32, 33); D19 (subclasses 6, 7); D20 (subclasses 11, 18); D21 subclasses (324, 325, 326, 327, 328, 329, 330, 331, 332, 333); 345 (subclasses 683, 902); and 715 (subclasses 764, 771, 773, 775, 776, 835, 836, 837, 838, 839, 846, 976)

Related applications: _____

If not previously filed for the above-identified application, the following items required by 37 CFR 1.155 are enclosed:
Formal drawings (see 37 CFR 1.84).
The fee set forth in 37 CFR 1.17(k).
An information disclosure statement in compliance with 37 CFR 1.98.

/John M. Fleming/ — Signature

September 8, 2006 — Date

John M. Fleming — Typed or printed name

56,536 — Registration Number, if applicable

(202) 824-3000 — Telephone Number

WARNING: Information on this form may become public. Credit card information should not be included on this form. Provide credit card information and authorization on PTO-2038.

PTO/SB/27 (09-04)
Approved for use through 07/31/2006. OMB 0651-0031
U.S. Patent and Trademark Office; U.S. DEPARTMENT OF COMMERCE
Under the Paperwork Reduction Act of 1995, no persons are required to respond to a collection of information unless it displays a valid OMB control number.

REQUEST FOR EXPEDITED EXAMINATION OF A DESIGN APPLICATION (37 CFR 1.155)

Application Number	TBD 29/248,887
Filing Date	09/08/2006
First Named Inventor	Bryan Pieratt et al.
Title	Icon for a Portion of a Display Screen
Atty Docket Number	013797.02467

ADDRESS TO:
MAIL STOP EXPEDITED DESIGN
COMMISSIONER FOR PATENTS
P.O. Box 1450
Alexandria, VA 22313-1450

Approved
Jacqueline M. Stone, Director
Technology Center 1700/2900
9/28/06

This is a request for expedited examination of a design application under 37 CFR 1.155.

NOTE: If the Request made by this form accompanies original application papers, include form PTO/SB/18 "Design Patent Application Transmittal" or its equivalent.

A preexamination search was conducted. The field of search was:

D14 (subclasses 374, 485, 486, 487, 488, 489, 490, 491, 492, 493, 494, 495); D18 (subclasses 24, 25, 26, 27, 28, 29, 30, 31, 32, 33); D19 (subclasses 6, 7); D20 (subclasses 11, 18); D21 subclasses (324, 325, 326, 327, 328, 329, 330, 331, 332, 333); 345 (subclasses 683, 902); and 715 (subclasses 764, 771, 773, 775, 776, 835, 836, 837, 838, 839, 846, 976)

Related applications: ____

If not previously filed for the above-identified application, the following items required by 37 CFR 1.155 are enclosed:
Formal drawings (see 37 CFR 1.84).
The fee set forth in 37 CFR 1.17(k).
An information disclosure statement in compliance with 37 CFR 1.98.

/John M. Fleming/ — Signature
September 8, 2006 — Date

John M. Fleming — Typed or printed name
56,536 — Registration Number, if applicable

(202) 824-3000 — Telephone Number

WARNING: Information on this form may become public. Credit card information should not be included on this form. Provide credit card information and authorization on PTO-2038.

PTO/SB/27 (09-04)
Approved for use through 07/31/2006. OMB 0651-0031
U.S. Patent and Trademark Office; U.S. DEPARTMENT OF COMMERCE
Under the Paperwork Reduction Act of 1995, no persons are required to respond to a collection of information unless it displays a valid OMB control number.

REQUEST FOR EXPEDITED EXAMINATION OF A DESIGN APPLICATION (37 CFR 1.155)

Application Number	TBD 29/248,890
Filing Date	09/08/2006
First Named Inventor	Bryan Pieratt et al.
Title	Icon for a Portion of a Display Screen
Atty Docket Number	013797.02468

ADDRESS TO:
MAIL STOP EXPEDITED DESIGN
COMMISSIONER FOR PATENTS
P.O. Box 1450
Alexandria, VA 22313-1450

Approved
Jacqueline M. Stone, Director
Technology Center 1700/2900
9/28/06

This is a request for expedited examination of a design application under 37 CFR 1.155.

NOTE: If the Request made by this form accompanies original application papers, include form PTO/SB/18 "Design Patent Application Transmittal" or its equivalent.

A preexamination search was conducted. The field of search was:

D14 (subclasses 374, 485, 486, 487, 488, 489, 490, 491, 492, 493, 494, 495); D18 (subclasses 24, 25, 26, 27, 28, 29, 30, 31, 32, 33); D19 (subclasses 6, 7); D20 (subclasses 11, 18); D21 subclasses (324, 325, 326, 327, 328, 329, 330, 331, 332, 333); 345 (subclasses 683, 902); and 715 (subclasses 764, 771, 773, 775, 776, 835, 836, 837, 838, 839, 846, 976)

Related applications: ____

If not previously filed for the above-identified application, the following items required by 37 CFR 1.155 are enclosed:
Formal drawings (see 37 CFR 1.84).
The fee set forth in 37 CFR 1.17(k).
An information disclosure statement in compliance with 37 CFR 1.98.

/John M. Fleming/ — Signature

September 8, 2006 — Date

John M. Fleming — Typed or printed name

56,536 — Registration Number, if applicable

(202) 824-3000 — Telephone Number

WARNING: Information on this form may become public. Credit card information should not be included on this form. Provide credit card information and authorization on PTO-2038.

PTO/SB/27 (09-04)
Approved for use through 07/31/2006. OMB 0651-0031
U.S. Patent and Trademark Office; U.S. DEPARTMENT OF COMMERCE
Under the Paperwork Reduction Act of 1995, no persons are required to respond to a collection of information unless it displays a valid OMB control number.

REQUEST FOR EXPEDITED EXAMINATION OF A DESIGN APPLICATION (37 CFR 1.155)

Application Number	TBD 29/248,893
Filing Date	09/08/2006
First Named Inventor	Bryan Pieratt et al.
Title	Icon for a Portion of a Display Screen
Atty Docket Number	013797.02469

ADDRESS TO:
MAIL STOP EXPEDITED DESIGN
COMMISSIONER FOR PATENTS
P.O. Box 1450
Alexandria, VA 22313-1450

This is a request for expedited examination of a design application under 37 CFR 1.155.

NOTE: If the Request made by this form accompanies original application papers, include form PTO/SB/18 "Design Patent Application Transmittal" or its equivalent.

A preexamination search was conducted. The field of search was:

D14 (subclasses 374, 485, 486, 487, 488, 489, 490, 491, 492, 493, 494, 495); D18 (subclasses 24, 25, 26, 27, 28, 29, 30, 31, 32, 33); D19 (subclasses 6, 7); D20 (subclasses 11, 18); D21 subclasses (324, 325, 326, 327, 328, 329, 330, 331, 332, 333); 345 (subclasses 683, 902); and 715 (subclasses 764, 771, 773, 775, 776, 835, 836, 837, 838, 839, 846, 976)

Related applications: ____

If not previously filed for the above-identified application, the following items required by 37 CFR 1.155 are enclosed:
Formal drawings (see 37 CFR 1.84).
The fee set forth in 37 CFR 1.17(k).
An information disclosure statement in compliance with 37 CFR 1.98.

9-21-06
Approved
Jacqueline M. Stone
Jacqueline M. Stone, Director
Technology Center 1700/2900

/John M. Fleming/ — Signature
September 8, 2006 — Date

John M. Fleming — Typed or printed name
56,536 — Registration Number, if applicable

(202) 824-3000 — Telephone Number

WARNING: Information on this form may become public. Credit card information should not be included on this form. Provide credit card information and authorization on PTO-2038.

PTO/SB/27 (09-04)
Approved for use through 07/31/2006. OMB 0651-0031
U.S. Patent and Trademark Office; U.S. DEPARTMENT OF COMMERCE
Under the Paperwork Reduction Act of 1995, no persons are required to respond to a collection of information unless it displays a valid OMB control number.

REQUEST FOR EXPEDITED EXAMINATION OF A DESIGN APPLICATION (37 CFR 1.155)

Application Number	TBD 29/248,897
Filing Date	09/08/2006
First Named Inventor	Bryan Pieratt et al.
Title	Icon for a Portion of a Display Screen
Atty Docket Number	013797.02470

ADDRESS TO:
MAIL STOP EXPEDITED DESIGN
COMMISSIONER FOR PATENTS
P.O. Box 1450
Alexandria, VA 22313-1450

This is a request for expedited examination of a design application under 37 CFR 1.155.

NOTE: If the Request made by this form accompanies original application papers, include form PTO/SB/18 "Design Patent Application Transmittal" or its equivalent.

A preexamination search was conducted. The field of search was:

D14 (subclasses 374, 485, 486, 487, 488, 489, 490, 491, 492, 493, 494, 495); D18 (subclasses 24, 25, 26, 27, 28, 29, 30, 31, 32, 33); D19 (subclasses 6, 7); D20 (subclasses 11, 18); D21 subclasses (324, 325, 326, 327, 328, 329, 330, 331, 332, 333); 345 (subclasses 683, 902); and 715 (subclasses 764, 771, 773, 775, 776, 835, 836, 837, 838, 839, 846, 976)

Related applications: ____

If not previously filed for the above-identified application, the following items required by 37 CFR 1.155 are enclosed:
Formal drawings (see 37 CFR 1.84).
The fee set forth in 37 CFR 1.17(k).
An information disclosure statement in compliance with 37 CFR 1.98.

9-21-06
Approved
Jacqueline M. Stone
Jacqueline M. Stone, Director
Technology Center 1700/2900

/John M. Fleming/ — Signature
September 8, 2006 — Date

John M. Fleming — Typed or printed name
56,536 — Registration Number, if applicable

(202) 824-3000 — Telephone Number

WARNING: Information on this form may become public. Credit card information should not be included on this form. Provide credit card information and authorization on PTO-2038.

PTO/SB/27 (09-04)
Approved for use through 07/31/2006. OMB 0651-0031
U.S. Patent and Trademark Office; U.S. DEPARTMENT OF COMMERCE
Under the Paperwork Reduction Act of 1995, no persons are required to respond to a collection of information unless it displays a valid OMB control number.

REQUEST FOR EXPEDITED EXAMINATION OF A DESIGN APPLICATION (37 CFR 1.155)

Application Number	TBD 29/248,901
Filing Date	09/08/2006
First Named Inventor	Bryan Pieratt et al.
Title	Icon for a Portion of a Display Screen
Atty Docket Number	013797.02471

ADDRESS TO:
MAIL STOP EXPEDITED DESIGN
COMMISSIONER FOR PATENTS
P.O. Box 1450
Alexandria, VA 22313-1450

Approved
Jacqueline M. Stone
Jacqueline M. Stone, Director
Technology Center 1700/2900
9/28/06

This is a request for expedited examination of a design application under 37 CFR 1.155.

NOTE: If the Request made by this form accompanies original application papers, include form PTO/SB/18 "Design Patent Application Transmittal" or its equivalent.

A preexamination search was conducted. The field of search was:

D14 (subclasses 374, 485, 486, 487, 488, 489, 490, 491, 492, 493, 494, 495); D18 (subclasses 24, 25, 26, 27, 28, 29, 30, 31, 32, 33); D19 (subclasses 6, 7); D20 (subclasses 11, 18); D21 subclasses (324, 325, 326, 327, 328, 329, 330, 331, 332, 333); 345 (subclasses 683, 902); and 715 (subclasses 764, 771, 773, 775, 776, 835, 836, 837, 838, 839, 846, 976)

Related applications: ____

If not previously filed for the above-identified application, the following items required by 37 CFR 1.155 are enclosed:
Formal drawings (see 37 CFR 1.84).
The fee set forth in 37 CFR 1.17(k).
An information disclosure statement in compliance with 37 CFR 1.98.

/John M. Fleming/ — Signature

September 8, 2006 — Date

John M. Fleming — Typed or printed name

56,536 — Registration Number, if applicable

(202) 824-3000 — Telephone Number

WARNING: Information on this form may become public. Credit card information should not be included on this form. Provide credit card information and authorization on PTO-2038.

PTO/SB/27 (09-04)
Approved for use through 07/31/2006. OMB 0651-0031
U.S. Patent and Trademark Office; U.S. DEPARTMENT OF COMMERCE
Under the Paperwork Reduction Act of 1995, no persons are required to respond to a collection of information unless it displays a valid OMB control number.

REQUEST FOR EXPEDITED EXAMINATION OF A DESIGN APPLICATION (37 CFR 1.155)

Application Number	TBD 29/248,903
Filing Date	09/08/2006
First Named Inventor	Bryan Pieratt et al.
Title	Icon for a Portion of a Display Screen
Atty Docket Number	013797.02473

ADDRESS TO:
MAIL STOP EXPEDITED DESIGN
COMMISSIONER FOR PATENTS
P.O. Box 1450
Alexandria, VA 22313-1450

Approved
Jacqueline M. Stone, Director
Technology Center 1700/2900
9/28/06

This is a request for expedited examination of a design application under 37 CFR 1.155.

NOTE: If the Request made by this form accompanies original application papers, include form PTO/SB/18 "Design Patent Application Transmittal" or its equivalent.

A preexamination search was conducted. The field of search was:

D14 (subclasses 374, 485, 486, 487, 488, 489, 490, 491, 492, 493, 494, 495); D18 (subclasses 24, 25, 26, 27, 28, 29, 30, 31, 32, 33); D19 (subclasses 6, 7); D20 (subclasses 11, 18); D21 subclasses (324, 325, 326, 327, 328, 329, 330, 331, 332, 333); 345 (subclasses 683, 902); and 715 (subclasses 764, 771, 773, 775, 776, 835, 836, 837, 838, 839, 846, 976)

Related applications: _____

If not previously filed for the above-identified application, the following items required by 37 CFR 1.155 are enclosed:
Formal drawings (see 37 CFR 1.84).
The fee set forth in 37 CFR 1.17(k).
An information disclosure statement in compliance with 37 CFR 1.98.

/John M. Fleming/ — Signature
September 8, 2006 — Date

John M. Fleming — Typed or printed name
56,536 — Registration Number, if applicable

(202) 824-3000 — Telephone Number

WARNING: Information on this form may become public. Credit card information should not be included on this form. Provide credit card information and authorization on PTO-2038.

PTO/SB/27 (09-04)
Approved for use through 07/31/2006. OMB 0651-0031
U.S. Patent and Trademark Office; U.S. DEPARTMENT OF COMMERCE
Under the Paperwork Reduction Act of 1995, no persons are required to respond to a collection of information unless it displays a valid OMB control number.

REQUEST FOR EXPEDITED EXAMINATION OF A DESIGN APPLICATION (37 CFR 1.155)

Application Number	TBD 29/248,904
Filing Date	09/08/2006
First Named Inventor	Bryan Pieratt et al.
Title	Icon for a Portion of a Display Screen
Atty Docket Number	013797.02474

ADDRESS TO:
MAIL STOP EXPEDITED DESIGN
COMMISSIONER FOR PATENTS
P.O. Box 1450
Alexandria, VA 22313-1450

Approved
Jacqueline M. Stone
Jacqueline M. Stone, Director
Technology Center 2700/2900
9/28/06

This is a request for expedited examination of a design application under 37 CFR 1.155.

NOTE: If the Request made by this form accompanies original application papers, include form PTO/SB/18 "Design Patent Application Transmittal" or its equivalent.

A preexamination search was conducted. The field of search was:

D14 (subclasses 374, 485, 486, 487, 488, 489, 490, 491, 492, 493, 494, 495); D18 (subclasses 24, 25, 26, 27, 28, 29, 30, 31, 32, 33); D19 (subclasses 6, 7); D20 (subclasses 11, 18); D21 subclasses (324, 325, 326, 327, 328, 329, 330, 331, 332, 333); 345 (subclasses 683, 902); and 715 (subclasses 764, 771, 773, 775, 776, 835, 836, 837, 838, 839, 846, 976)

Related applications: ____

If not previously filed for the above-identified application, the following items required by 37 CFR 1.155 are enclosed:
Formal drawings (see 37 CFR 1.84).
The fee set forth in 37 CFR 1.17(k).
An information disclosure statement in compliance with 37 CFR 1.98.

/John M. Fleming/ — Signature

September 8, 2006 — Date

John M. Fleming — Typed or printed name

56,536 — Registration Number, if applicable

(202) 824-3000 — Telephone Number

WARNING: Information on this form may become public. Credit card information should not be included on this form. Provide credit card information and authorization on PTO-2038.

PTO/SB/27 (07-06)
Approved for use through 09/30/2006 OMB 0651-0031
U.S. Patent and Trademark Office; U.S. DEPARTMENT OF COMMERCE
Under the Paperwork Reduction ACT of 1995, no persons are required to respond to collection of information unless it displays a valid OMB control number.

REQUEST FOR EXPEDITED EXAMINATION OF A DESIGN APPLICATION (37 CFR 1.155)

Application Number	Unassigned 29/248,911
Filing Date	Unassigned
First Named Inventor	Savva Teteriatnikov
Title	Shoe Bottom & Periphery
Atty Docket Number	210859-17416

ADDRESS TO:
MAIL STOP EXPEDITED DESIGN
COMMISSIONER FOR PATENTS
P.O. Box 1450
Alexandria, VA 22313-1450

Approved 9/28/06
Jacqueline M. Stone, Director (Acting)
Technology Center 1700/2900

This is a request for expedited examination of a design application under 37 CFR 1.155.

NOTE: If the Request made by this form accompanies original application papers, include form PTO/SB/18 "Design Patent Application Transmittal" or its equivalent.

A preexamination search was conducted. The field of search was:

Class 36; subclasses 38, 22R, 25R, 73, 103, 104 / Class D2; subclasses 896, 902, 908, 914, 916, 917, 927, 927, 943, 944, 945, 946, 947, 948, 949, 950, 951, 952, 953, 954, 955, 956, 957, 958, 959, 960, 964, 967, 972, 977

Related applications:

If not previously filed for the above-identified application, the following items required by 37 CFR 1.155 are enclosed:

- Formal drawings (see 37 CFR 1.84).
- The fee set forth in 37 CFR 1.17(k).
- An information disclosure statement in compliance with 37 CFR 1.98.

Signature — Date: Sept 8, 2006

Marshall Lerner — Typed or printed name

24,109 — Registration Number, if applicable

310-557-1511 — Telephone Number

WARNING: Information on this form may become public. Credit card information should not be included on this form. Provide credit card information and authorization on PTO-2038.

This collection of information is required by 37 CFR 1.155. The information is required to obtain or retain a benefit by the public which is to file (and by the USPTO to process) an application. Confidentiality is governed by 35 U.S.C. 122 and 37 CFR 1.11 and 1.14. This collection is estimated to take 6 minutes to complete, including gathering, preparing, and submitting the completed application form to the USPTO. Time will vary depending upon the individual case. Any comments on the amount of time you require to complete this form and/or suggestions for reducing this burden, should be sent to the Chief Information Officer, U.S. Patent and Trademark Office, U.S. Department of Commerce, P.O. Box 1450, Alexandria, VA 22313-1450. DO NOT SEND FEES OR COMPLETED FORMS TO THIS ADDRESS. SEND TO: Commissioner for Patents, P.O. Box 1450, Alexandria, VA 22313-1450.

If you need assistance in completing the form, call 1-800-PTO-9199 and select option 2.

PTO/SB/27 (09-04)
Approved for use through 07/31/2006. OMB 0651-0031
U.S. Patent and Trademark Office; U.S. DEPARTMENT OF COMMERCE
Under the Paperwork Reduction Act of 1995, no persons are required to respond to a collection of information unless it displays a valid OMB control number.

REQUEST FOR EXPEDITED EXAMINATION OF A DESIGN APPLICATION (37 CFR 1.155)

Application Number	TBD 29/248,923
Filing Date	09/11/2006
First Named Inventor	Bryan Pieratt et al.
Title	Icon for a Portion of a Display Screen
Atty Docket Number	013797.02472

ADDRESS TO:
MAIL STOP EXPEDITED DESIGN
COMMISSIONER FOR PATENTS
P.O. Box 1450
Alexandria, VA 22313-1450

Approved Jacqueline M. Stone 9/28/06
Jacqueline M. Stone, Director
Technology Center 1700/2900

This is a request for expedited examination of a design application under 37 CFR 1.155.

NOTE: If the Request made by this form accompanies original application papers, include form PTO/SB/18 "Design Patent Application Transmittal" or its equivalent.

A preexamination search was conducted. The field of search was:

D14 (subclasses 374, 485, 486, 487, 488, 489, 490, 491, 492, 493, 494, 495); D18 (subclasses 24, 25, 26, 27, 28, 29, 30, 31, 32, 33); D19 (subclasses 6, 7); D20 (subclasses 11, 18); D21 subclasses (324, 325, 326, 327, 328, 329, 330, 331, 332, 333); 345 (subclasses 683, 902); and 715 (subclasses 764, 771, 773, 775, 776, 835, 836, 837, 838, 839, 846, 976)

Related applications: ____

If not previously filed for the above-identified application, the following items required by 37 CFR 1.155 are enclosed:
Formal drawings (see 37 CFR 1.84).
The fee set forth in 37 CFR 1.17(k).
An information disclosure statement in compliance with 37 CFR 1.98.

/John M. Fleming/ — Signature

September 11, 2006 — Date

John M. Fleming — Typed or printed name

56,536 — Registration Number, if applicable

(202) 824-3000 — Telephone Number

WARNING: Information on this form may become public. Credit card information should not be included on this form. Provide credit card information and authorization on PTO-2038.

UNITED STATES PATENT AND TRADEMARK OFFICE

COMMISSIONER FOR PATENTS
UNITED STATES PATENT AND TRADEMARK OFFICE
P.O. BOX 1450
ALEXANDRIA, VA 22313-1450
www.uspto.gov

CARSTENS & CAHOON, LLP
P O BOX 802334
DALLAS, TX 75380

COPY MAILED

DEC 0 5 2007

OFFICE OF PETITIONS

In re Application of
Maria Colin, et al.
Application No. 29/248,931
Filed: September 11, 2006
Attorney Docket No. CFLAY.60321

ON PETITION

This is a decision on the petition under 37 CFR 1.137(b), filed July 30, 2007, to revive the above-identified design application.

The petition is **GRANTED**.

The application became abandoned for failure to timely pay the issue fee on or before June 22, 2007, as required by the Notice of Allowance and Fee(s) Due, mailed March 22, 2007, which set a statutory period for reply of three (3) months. A Notice of Abandonment was mailed on July 18, 2007. In response, on July 30, 2007, the present petition was filed.

The petition satisfies the requirements of 37 CFR 1.137(b) in that petitioner has supplied (1) the reply in the form of the $800 issue fee, (2) the petition fee of $1,500, (3) an adequate statement of unintentional delay, and (4) a terminal disclaimer and fee as required by 37 CFR 1.137(d). Accordingly, the failure to timely pay the issue fee as required by the Notice of March 22, 2007 is accepted as being unintentionally delayed.

The terminal disclaimer is accepted and has been made of record. Any continuing application filed from this application must contain a copy of the terminal disclaimer. The copy of the terminal disclaimer must be filed with a cover letter requesting the terminal disclaimer be recorded on the continuing application. A copy of this decision should be attached to the cover letter.

The application is being referred to Publishing Division.

Telephone inquires related to this decision should be directed to the undersigned at (571) 272-3204. Telephone inquiries related to processing at Publishing Division should be directed to (571) 272-4200.

Sherry D. Brinkley
Petitions Examiner
Office of Petitions

PATENT

IN THE UNITED STATES PATENT AND TRADEMARK OFFICE

9-27-07
Approved Jacqueline M. Stone
Jacqueline M. Stone, Director
Technology Center 1700/2900

Applicants: JOSEPH A. FESTER AND TIMOTHY A. FIELD

For: DESIGN FOR FILTER

Serial No.: 29/248,~~892~~ 982 Examiner:

Filed: 09/14/2006 Group Art Unit: 2913

Docket No.: 71189-1973

CERTIFICATE OF MAILING/TRANSMISSION (37 CFR 1.8(a))

I hereby certify that this correspondence is, on the date shown below, being:

☐ deposited with the United States Postal Service with sufficient postage as first class mail, in an envelope addressed to the Box PCT, Commissioner for Patents, Alexandria, VA 22313-1450.

☒ transmitted via EFS Web filing to the Patent and Trademark Office.

/Christine M Judge/
Signature

Date: September 19, 2007

Christine M. Judge
(type or print name of person certifying)

REQUEST FOR EXPEDITED EXAMINATION OF DESIGN APPLICATION

Commissioner for Patents
PO Box 1450
Alexandria, VA 22313-1450

Sir:

Applicants hereby request expedited examination of the above-identified design application under the provisions of 37 CFR § 1.155. Applicants believe that they qualify for expedited examination because the application as filed includes drawings in compliance with 37 CFR § 1.84, Applicants have conducted a preexamination search and Applicants herewith file a Request for Expedited Examination.

The Commissioner is authorized to charge the fee set forth in 37 CFR § 1.17(k) to our Deposit Account No. 50-2003.

A preexamination search was conducted by an experienced searcher in the firm of McGarry Bair PC in a data base which includes the records of the U.S. Patent and Trademark

UNITED STATES PATENT AND TRADEMARK OFFICE

Commissioner for Patents
United States Patent and Trademark Office
P.O. Box 1450
Alexandria, VA 22313-1450
www.uspto.gov

THE SONI LAW FIRM
55 S. LAKE AVE., SUITE 720
PASADENA, CA 91101

COPY MAILED

JUN 12 2008

OFFICE OF PETITIONS

In re Application of :
Carl Cetera :
Application No. 29/249,053 : ON PETITION
Filed: September 18, 2006 :
Attorney Docket No. COTAP-217D2 :

This is a decision on the petition filed February 13, 2008 under 37 CFR 1.137(b), to revive the above-identified application.

The petition is **GRANTED.**

The above-identified application became abandoned for failure to submit the Issue fee and formal drawings in a timely manner in reply to the Notice of Allowance mailed October 11, 2007, which set a statutory period for reply of three (3) months. Accordingly, the above-identified application became abandoned on January 12, 2008.

The petition satisfies the conditions for revival pursuant to the provisions of 37 CFR 1.137(b) in that (1) the reply in the form of payment of the Issue fee and drawings; (2) the petition fee; and (3) the required statement of unintentional delay have been received; (4) terminal disclaimer. Accordingly, the issue fee is accepted as having been unintentionally delayed.

Telephone inquiries concerning this decision should be directed to the undersigned at (571) 272-3210.

This matter is being referred to the Office of Data Management for further processing.

Irvin Dingle
Petitions Examiner
Office of Petitions

UNITED STATES PATENT AND TRADEMARK OFFICE

Commissioner for Patents
United States Patent and Trademark Office
P.O. Box 1450
Alexandria, VA 22313-1450
www.uspto.gov

DUANE MORRIS LLP - PHILADELPHIA
IP DEPARTMENT
30 SOUTH 17TH STREET
PHILADELPHIA PA 19103-4196

COPY MAILED

NOV 0 6 2009

OFFICE OF PETITIONS

In re Application of :
Volkmar Rommel :
Application No. 29/249,061 : ON PETITION
Filed: September 18, 2006 :
Attorney Docket No. D4695-00158 :

This is in response to the petition under 37 CFR 1.182, filed May 19, 2009, requesting retraction of the Notice of Abandonment and that the application be returned to pending status.

The petition is **GRANTED**.

The Office mailed a Notice of Allowance in the above-identified application on August 10, 2007. In response, Applicants filed a CPA on October 31, 2007, but did not pay the CPA filing fee. The Office erroneously treated the CPA as a new filing, giving it a new application number. Eventually the error was discovered, and new new filing was merged back with the instant application. The Office then mailed a Notice of Abandonment on December 5, 2007, stating that the issue and publication fees had not been timely paid.

It is obvious from reviewing the filing that Applicants timely filed a CPA in response to the Notice of Allowance. While it is true that Applicants did not pay the CPA filing fee, it is also ture that the Office should have mailed Applicants a Notice informing them of such. See MPEP 201.06(d).

In view of the above, the petition is granted, and the holding of abandonment is **WITHDRAWN**.

The application is returned to pending status.

As the CPA fee was never charged, the CPA fee of $110 has been charged to Deposit Account No. 04-1679, as authorized.

The file is being forwarded to Group Art Unit 2913 for examination of the CPA, filed October 31, 2007.

Telephone inquiries regarding this decision should be directed to the undersigned at (571)272-3207.

Cliff Congo
Petitions Attorney
Office of Petitions

SPE RESPONSE FOR CERTIFICATE OF CORRECTION

Paper No.: ____

DATE : 6/4/08

TO SPE OF : ART UNIT 2914

SUBJECT : Request for Certificate of Correction for Appl. No.: 29/249025 Patent No: D564275

A response is requested with respect to a request for a certificate of correction.

With respect to the change(s) requested to correct Office and/or Applicant's errors, should the patent read as shown in the certificate of correction attached herewith or the COCIN document(s), in IFW Images for the above-identified patented application? No new matter should be introduced, nor should the scope or meaning of the claims be changed.

If the response is for an IFW, within 7 days, please complete and forward the response, to the employee (named below) via scanning into application images, using document code **COCX**.

If the response is for a paper file wrapper, please complete the response and forward the response with the paper file wrapper, to the employee (named below), within 7 days, to:

Certificates of Correction Branch (CofC)
South Tower - 9A22
Palm Location 7580

VIRGINIA TOLBERT
Certificates of Correction Branch
703-308-9390 ext. 113

Thank You For Your Assistance

The request for issuing the above-identified correction(s) is hereby:

Note your decision on the appropriate box.

- [X] **Approved** — All changes apply.
- [ ] **Approved in Part** — Specify below which changes do not apply.
- [ ] **Denied** — State the reasons for denial below.

Comments: _____

Robert M. Spear
SPE

2910
Art Unit

PTOL-306 (REV. 7/03) U.S. DEPARTMENT OF COMMERCE Patent and Trademark Office

PTO/SB/27 (07-06)
Approved for use through 09/30/2006. OMB 0651-0031
U.S. Patent and Trademark Office; U.S DEPARTMENT OF COMMERCE
Under the Paperwork Reduction ACT of 1995, no persons are required to respond to collection of information unless it displays a valid OMB control number.

REQUEST FOR EXPEDITED EXAMINATION OF A DESIGN APPLICATION (37 CFR 1.155)

Application Number	TBA 29/249,084
Filing Date	September 19, 2006
First Named Inventor	D'Wayne Edwards
Title	Portion of a Shoe Upper
Atty Docket Number	015127.00751

ADDRESS TO:
MAIL STOP EXPEDITED DESIGN
COMMISSIONER FOR PATENTS
P.O. Box 1450
Alexandria, VA 22313-1450

Approved
Jacqueline M. Stone, Director
Technology Center 1700/2900
9/28/06

This is a request for expedited examination of a design application under 37 CFR 1.155.

NOTE: If the Request made by this form accompanies original application papers, include form PTO/SB/18 "Design Patent Application Transmittal" or its equivalent.

A preexamination search was conducted. The field of search was:

D2, subclasses 896, 902, 907, 908, 910, 911, 943, 944, 945, 946, 969, 970, 972, 973, 974

Related applications: _____

If not previously filed for the above-identified application, the following items required by 37 CFR 1.155 are enclosed:

- Formal drawings (see 37 CFR 1.84).
- The fee set forth in 37 CFR 1.17(k).
- An information disclosure statement in compliance with 37 CFR 1.98.

/H. Wayne Porter/	September 19, 2006
Signature	Date
H. Wayne Porter	42,084
Typed or printed name	Registration Number, if applicable
202-824-3000	
Telephone Number	

WARNING: Information on this form may become public. Credit card information should not be included on this form. Provide credit card information and authorization on PTO-2038.

This collection of information is required by 37 CFR 1.155. The information is required to obtain or retain a benefit by the public which is to file (and by the USPTO to process) an application. Confidentiality is governed by 35 U.S.C. 122 and 37 CFR 1.11 and 1.14. This collection is estimated to take 6 minutes to complete, including gathering, preparing, and submitting the completed application form to the USPTO. Time will vary depending upon the individual case. Any comments on the amount of time you require to complete this form and/or suggestions for reducing this burden, should be sent to the Chief Information Officer, U.S. Patent and Trademark Office, U.S. Department of Commerce, P.O. Box 1450, Alexandria, VA 22313-1450. DO NOT SEND FEES OR COMPLETED FORMS TO THIS ADDRESS. SEND TO: Commissioner for Patents, P.O. Box 1450, Alexandria, VA 22313-1450.

If you need assistance in completing the form, call 1-800-PTO-9199 and select option 2.

UNITED STATES PATENT AND TRADEMARK OFFICE

COMMISSIONER FOR PATENTS
UNITED STATES PATENT AND TRADEMARK OFFICE
P.O. BOX 1450
ALEXANDRIA, VA 22313-1450
www.uspto.gov

MCKEE, VOORHEES & SEASE, P.L.C.
801 GRAND AVENUE
SUITE 3200
DES MOINES IA 50309-2721

COPY MAILED

APR 26 2007

OFFICE OF PETITIONS

In re Application of :
Elwell, et al. :
Application No. 29/249,118 : DECISION ON PETITION
Filed: September 21, 2006 :
Attorney Docket No. P07620US00 :

This is a decision on the petition under 37 CFR 1.182, filed, October 19, 2006, to change the name of inventor "Hoon Joung" to – Hoon Jeoung--.

The petition is **DISMISSED**.

Any request for reconsideration should be submitted within two (2) months of the mailing date of this decision on petition. Extensions of time are available under 37 CFR 1.136(a).

Petitioners request that the Office correct the spelling of the second joint inventor's name to the signed version.

However, his signature is illegible and the declaration and ADS filed with the application list the second joint inventor's surname as "Joung".

The Office requires petitioners to submit a corrected ADS that lists the correct spelling of the second joint inventor's surname.

Further correspondence with respect to this matter should be addressed as follows:

By mail: Mail Stop PETITIONS
Commissioner for Patents
Post Office Box 1450
Alexandria, VA 22313-1450

By hand: Customer Service Window
Mail Stop Petitions
Randolph Building
401 Dulany Street
Alexandria, VA 22314

By fax: (571) 273-8300
ATTN: Office of Petitions

Any questions concerning this matter may be directed to the undersigned at (571) 272-3230.

Shirene Willis Brantley
Senior Petitions Attorney
Office of Petitions

UNITED STATES PATENT AND TRADEMARK OFFICE

COMMISSIONER FOR PATENTS
UNITED STATES PATENT AND TRADEMARK OFFICE
P.O. BOX 1450
ALEXANDRIA, VA 22313-1450
www.uspto.gov

ORRICK, HERRINGTON & SUTCLIFFE, LLP
IP PROSECUTION DEPARTMENT
4 PARK PLAZA
SUITE 1600
IRVINE, CA 92614-2558

COPY MAILED
NOV 20 2006
OFFICE OF PETITIONS

In re Application of :
Marconi :
Filed: September 21, 2006 : ON PETITION
Application No. 29/249,123 :
Atty. Dkt. No.: 18039.4001 :

This decision in response to the petition, 2006 filed November 1, 2006, to accord the above-identified application a filing date of September 21, 2006.

The application was filed September 21, 2006. The Notice of Incomplete Nonprovisional Application (Notice), mailed October 19, 2006, indicated that the application had not been accorded a filing date because the application appeared to have been submitted without a claim.

The instant petition was filed in response to the Notice. However, the Notice was withdrawn on November 6, 2006.

In view thereof, the petition is hereby **DISMISSED AS MOOT**.

A refund of the previously submitted petition fee of $400.00 will be issued in due course.

The application is being returned to the Office of Initial Patent Examination for further processing.

Telephone inquiries related to this decision may be directed to the undersigned at (571) 272-3205.

Alesia M. Brown
Petitions Attorney
Office of Petitions

SPE RESPONSE FOR CERTIFICATE OF CORRECTION

Paper No.: X

DATE : April 03, 2008

TO SPE OF : ART UNIT 2911

SUBJECT : Request for Certificate of Correction for Appl. No.: 29/249144 Patent No.: D550692 S

A response is requested with respect to a request for a certificate of correction.

With respect to the change(s) requested to correct Office and/or Applicant's errors, should the patent read as shown in the certificate of correction attached herewith or the COCIN document(s), in IFW images for the above-identified patented application? No new matter should be introduced, nor should the scope or meaning of the claims be changed.

If the response is for an IFW, within 7 days, please complete and forward the response, to the employee (named below) via scanning into application images, using document code **COCX**.

DO NOT SENT TO ATTORNEY

If the response is for a paper file wrapper, please complete the response and forward the response with the paper file wrapper, to the employee (named below), within 7 days, to:

Certificates of Correction Branch (CofC)
South Tower - 9A22
Palm Location 7580

[redacted]

LAMONTE NEWSOME
Certificates of Correction Branch
703-308-9390 ext. 112

Thank You For Your Assistance

The request for issuing the above-identified correction(s) is hereby:
Note your decision on the appropriate box.

- ☑ **Approved** — All changes apply.
- ☐ **Approved in Part** — Specify below which changes **do not** apply.
- ☐ **Denied** — State the reasons for denial below.

Comments: _____

CATHRON C. BROOKS
SUPERVISORY PATENT EXAMINER
SPE

2911
Art Unit

PAGE 1/1 * RCVD AT 5/2/2008 9:42:02 AM [Eastern Daylight Time] * SVR:USPTO-EFXRF-5/42 * DNIS:2709990 * CSID: * DURATION (mm-ss):01-04

UNITED STATES PATENT AND TRADEMARK OFFICE

Commissioner for Patents
United States Patent and Trademark Office
P.O. Box 1450
Alexandria, VA 22313-1450
www.uspto.gov

CROSSLEY PATENT LAW
236 South Third Street
#287
MONTROSE, CO 81401

MAILED

MAR 06 2009

OFFICE OF PETITIONS

In re Application of :
Kathey E. Tuck :
Application No. 29/249,173 : ON PETITION
Filed: September 26, 2006 :
Attorney Docket No. 05-12-08.2DA :

This is a decision on the petition under 37 CFR 1.137(b), filed on January 7, 2009, to revive the above-identified application.

The application became abandoned for failure to file corrected drawings in response to the Notice of Allowability mailed May 15, 2008. A Notice of Abandonment was mailed on November 12, 2008.

The petition satisfies the requirements of 37 CFR 1.137(b) in that petitioner has supplied (1) the reply in the form of five sheets of replacement drawings containing Figures 1-5; (2) the petition fee of $810; (3) a proper statement of unintentional delay; and (4) a terminal disclaimer and fee as required by 37 CFR 1.137(d). Therefore, the petition is **GRANTED**.

The terminal disclaimer under 37 CFR 1.137(d), filed January 7, 2009, has been accepted and made of record. Any continuing application filed from this application must contain a copy of the terminal disclaimer. The copy of the terminal disclaimer must be filed with a cover letter requesting the terminal disclaimer be recorded on the continuing application. A copy of this decision should be attached to the cover letter.

This application file is being referred to the Office of Data Management for further processing into a patent.

Telephone inquiries concerning this decision should be directed to the undersigned at (571) 272-3226.

Andrea Smith
Petitions Examiner
Office of Petitions

UNITED STATES PATENT AND TRADEMARK OFFICE

COMMISSIONER FOR PATENTS
UNITED STATES PATENT AND TRADEMARK OFFICE
P.O. BOX 1450
ALEXANDRIA, VA 22313-1450
www.uspto.gov

REED SMITH, LLP
ATTN: PATENT RECORDS DEPARTMENT
599 LEXINGTON AVENUE, 29TH FLOOR
NEW YORK, NY 10022-7650

COPY MAILED

JUN 20 2008

OFFICE OF PETITIONS

ON PETITION

In re Application of :
Fred Koenecke :
Application No. 29/249,188 :
Filed: September 26, 2006 :
Attorney Docket No. GK-EIS- :
1115/500593.20108 :

This is a decision on the petition under 37 CFR 1.137(b), filed on November 7, 2007, to revive the above-identified application.

The petition is **DISMISSED**.

The above-identified application became abandoned for failure to timely respond to the Notice of Allowability mailed June 28, 2007. A Notice of Abandonment was mailed on October 22, 2007.

A grantable petition under 37 CFR 1.137(b) must be accompanied by: (1) the required reply, unless previously filed; (2) the petition fee as set forth in 37 CFR 1.17(m); (3) a statement that the entire delay in filing the required reply from the due date for the reply until the filing of a grantable petition pursuant to 37 CFR 1.137(b) was unintentional; and (4) any terminal disclaimer (and fee as set forth in 37 CFR 1.20(d)) required by 37 CFR 1.137(d). Where there is a question as to whether either the abandonment or the delay in filing a petition under 37 CFR 1.137 was unintentional, the Commissioner may require additional information. See MPEP 711.03(c)(II)(C) and (D). The instant petition lacks item(s) (4).

The Office acknowledges receipt of $1,540 for the petition to revive fee and five sheets of corrected drawings containing Figures 1-7 filed on November 7, 2007. However, a Terminal Disclaimer and $130 fee is required under 37 CFR 1.137(d) if the application is: (1) a design application, (2) a utility application filed before June 8, 1995, or (3) a plant application filed before June 8, 1995. The Terminal Disclaimer must dedicate to the public a terminal part of the term of any patent granted the application equivalent to the period of abandonment of the application, and must also apply to any patent granted on any application containing a specific reference under 35 U.S.C. 120, 121 or 365(c) to the application for which revival is sought.

Any request for reconsideration of this decision must be submitted within **TWO (2) MONTHS** from the mail date of this decision. Extensions of time under 37 CFR 1.136(a) is permitted. The reconsideration request should include a cover letter entitled "Renewed Petition under 37 CFR 1.137(b), and be accompanied by the required Terminal Disclaimer and $130 fee." This is **not** a final agency action within the meaning of 5 U.S.C. § 704.

Further correspondence with respect to this matter should be addressed as follows:

By mail:
Mail Stop PETITION
Commissioner for Patents
P. O. Box 1450
Alexandria, VA 22313-1450

By hand:
U. S. Patent and Trademark Office
Customer Service Window, Mail Stop Petitions
Randolph Building
401 Dulany Street
Alexandria, VA 22314

The centralized facsimile number is **(571) 273-8300.**

Telephone inquiries concerning this decision should be directed to the undersigned at (571) 272-3226.

Andrea Smith
Petitions Examiner
Office of Petitions

UNITED STATES PATENT AND TRADEMARK OFFICE

Commissioner for Patents
United States Patent and Trademark Office
P.O. Box 1450
Alexandria, VA 22313-1450
www.uspto.gov

REED SMITH, LLP
ATTN: PATENT RECORDS DEPARTMENT
599 LEXINGTON AVENUE, 29TH FLOOR
NEW YORK, NY 10022-7650

COPY MAILED
NOV 06 2008

In re Application of :
Fred Koenecke :
Application No. 29/249,188 : ON PETITION
Filed: September 26, 2006 :
Attorney Docket No. GK-EIS- :
1115/500593.20108 :

This is a decision on the renewed petition under 37 CFR 1.137(b), filed on July 31, 2008, to revive the above-identified application.

The petition satisfies the requirements of 37 CFR 1.137(b) in that petitioner has supplied (1) the reply in the form of a terminal disclaimer with the $130 fee and five sheets of replacement drawings containing Figures 1-7; (2) the petition fee of $1,540; and (3) a proper statement of unintentional delay. Therefore, the petition is **GRANTED**.

The terminal disclaimer filed under 37 CFR 1.137(d) on July 31, 2008 is accepted and made of record. Any continuing application filed from this application must contain a copy of the terminal disclaimer. The copy of the terminal disclaimer must be filed with a cover letter requesting the terminal disclaimer be recorded on the continuing application. A copy of this decision should be attached to the cover letter.

This application file is being referred to the Office of Data Management to be processed into a patent.

Telephone inquiries concerning this decision should be directed to the undersigned at (571) 272-3226.

Andrea Smith
Petitions Examiner
Office of Petitions

Application Number	Application/Control No.	Applicant(s)/Patent under Reexamination	
	29/249,188		

Document Code - DISQ	Internal Document – DO NOT MAIL

TERMINAL DISCLAIMER	☒ APPROVED	☐ DISAPPROVED
Date Filed: 7/31/2008	This patent is subject to a Terminal Disclaimer	

Approved/Disapproved by:
A. M. Smith

UNITED STATES PATENT AND TRADEMARK OFFICE

Commissioner for Patents
United States Patent and Trademark Office
P.O. Box 1450
Alexandria, VA 22313-1450
www.uspto.gov

ALSTON & BIRD LLP
BANK OF AMERICA PLAZA
101 SOUTH TRYON STREET, SUITE 4000
CHARLOTTE NC 28280-4000

COPY MAILED

FEB 0 4 2008

OFFICE OF PETITIONS

In re Application of	:	
Rients Mathijs Bakker	:	
Application No. 29/249,192	:	DECISION DISMISSING PETITION
Filed: September 26, 2006	:	UNDER 37 CFR 1.313(a)
Attorney Docket No. 048373/313686	:	

This is a decision on the petition filed October 5, 2007, under 37 CFR 1.313(a) to withdraw the above-identified application from issue. This is also a decision on the request for refund filed January 9, 2008.

The petition is **DISMISSED** as moot.

The petition appears to have been unnecessary since the examiner mailed a Supplemental Notice of Allowability on December 3, 2007, indicating that the Supplemental IDS had been considered.

The request for refund of January 9, 2008 for the $130 petition fee submitted on October 5, 2007 has been credited to deposited account no. 16-0605 as requested.

Any questions concerning this matter may be directed to the undersigned at (571) 272-3208.

Karen Creasy
Petitions Examiner
Office of Petitions

UNITED STATES PATENT AND TRADEMARK OFFICE

Commissioner for Patents
United States Patent and Trademark Office
P.O. Box 1450
Alexandria, VA 22313-1450
www.uspto.gov

ALSTON & BIRD LLP
BANK OF AMERICA PLAZA
101 SOUTH TRYON STREET, SUITE 4000
CHARLOTTE NC 28280-4000

COPY MAILED

FEB 0 4 2008

OFFICE OF PETITIONS

In re Application of	:	
Rients Mathijs Bakker	:	
Application No. 29/249,192	:	DECISION ON PETITION
Filed: September 26, 2006	:	
Attorney Docket No. 048373/313686	:	

This is a decision on the petition under the unintentional provisions of 37 CFR 1.137(b), filed January 8, 2008, to revive the above-identified application.

The petition is **GRANTED**.

This application became abandoned for failure to timely pay the issue fee on or before December 11, 2007, as required by the Notice of Allowance and Fee(s) Due, mailed September 11, 2007. Accordingly, the date of abandonment of this application is December 12, 2007. The Notice of Abandonment was mailed January 4, 2008.

The petition satisfies the requirements of 37 CFR 1.137(b) in that petitioner has supplied (1) the reply in the form of payment of the issue fee of $820, (2) the petition fee of $1,540; (3) a proper statement of unintentional delay; and (4) a terminal disclaimer and fee as required by 37 CFR 1.137(d).

Telephone inquiries concerning this decision should be directed to Terri Williams at (571) 272-2991.

This application is being referred to the Office of Data Management for processing into a patent.

Karen Creasy

Karen Creasy
Petitions Examiner
Office of Petitions

UNITED STATES PATENT AND TRADEMARK OFFICE

Commissioner for Patents
United States Patent and Trademark Office
P.O. Box 1450
Alexandria, VA 22313-1450
www.uspto.gov

NOVAK DRUCE + QUIGG LLP (RIM)
1000 LOUISIANA STREET
FIFTY-THIRD FLOOR
HOUSTON, TX 77002

MAILED

SEP 23 2009

OFFICE OF PETITIONS

In re Application of	:	
Griffin et al.	:	
Application No. 29/249,200	:	DECISION ON PETITION
Filed: September 26, 2006	:	
Attorney Docket No. 8085.058.DESUS1	:	

This is a decision on the petition under the unintentional provisions of 37 CFR 1.137(b), filed July 31, 2009, to revive the above-identified application.

The petition is **DISMISSED**.

Any request for reconsideration of this decision must be submitted within TWO (2) MONTHS from the mail date of this decision. Extensions of time under 37 CFR 1.136(a) are permitted. The reconsideration request should include a cover letter entitled "Renewed Petition under 37 CFR 1.137(b)." This is not a final agency action within the meaning of 5 U.S.C. § 704.

A grantable petition under 37 CFR 1.137(b)[1] must be accompanied by: (1) the required reply,[2] unless previously filed, (2) the petition fee as set forth in 37 CFR 1.17(m), (3) a statement that the entire delay in filing the required reply from the due date for the reply until the filing of a grantable petition pursuant to 37 CFR 1.137(b) was unintentional, and (4) any terminal disclaimer (and fee as set forth in 37 CFR 1.20(d)) required by 37 CFR 1.137(d). Where there is a question as to whether either the abandonment or the delay in filing a petition under 37 CFR 1.137 was unintentional, the Director may require additional information. See MPEP 711.03(c)(II)(C) and (D).

The petition lacks item (4) above. While it is noted that a terminal disclaimer was submitted with the petition as required by 37 CFR 1.137(d), it however cannot be accepted at this time since it is not signed by an attorney or agent of record in compliance with § 1.32(b). See 37 CFR 1.321(b)(i)(iv).

Further correspondence with respect to this matter should be addressed as follows:

[1] As amended effective December 1, 1997. See Changes to Patent Practice and Procedure: Final Rule Notice, 62 Fed. Reg. 53131, 5194-95 (October 10, 1997), 1203 Off. Gaz. Pat. Office 63, 119-20 (October 21, 1997).

[2] In a nonprovisional application abandoned for failure to prosecute, the required reply may be met by the filing of a continuing application. In an application or patent, abandoned or lapsed for failure to pay the issue fee or any portion thereof, the required reply must be the payment of the issue fee or any outstanding balance thereof.

By Mail: Mail Stop PETITION
Commissioner for Patents
P. O. Box 1450
Alexandria, VA 22313-1450

By Hand: U. S. Patent and Trademark Office
Customer Service Window, Mail Stop Petitions
Randolph Building
401 Dulany Street
Alexandria, VA 22314

By Internet: EFS-Web[3]

The centralized facsimile number is (571) 273-8300.

Telephone inquiries concerning this decision should be directed to Alicia Kelley at (571) 272-6059.

/SDB/

Sherry D. Brinkley
Petitions Examiner
Office of Petitions

[3] www.uspto.gov/ebc/efs_help.html (for help using EFS-Web call the Patent Electronic Business Center at (866) 217-9197)

UNITED STATES PATENT AND TRADEMARK OFFICE

Commissioner for Patents
United States Patent and Trademark Office
P.O. Box 1450
Alexandria, VA 22313-1450
www.uspto.gov

NOVAK DRUCE + QUIGG LLP (RIM)
1000 LOUISIANA STREET
FIFTY-THIRD FLOOR
HOUSTON TX 77002

MAILED

NOV 19 2009

OFFICE OF PETITIONS

In re Application of
Griffin et al.
Application No. 29/249,200
Filed: September 29, 2006
Attorney Docket No. 8085.052.DESUS1

: DECISION ON PETITION

This is a decision on the renewed petition under 37 CFR 1.137(b), filed October 1, 2009 to revive the above-identified design application.

The petition is **GRANTED**.

This application became abandoned for failure to timely pay the issue fee on or before July 30, 2009, as required by the Notice of Allowance and Fee(s) Due mailed April 30, 2009 which set a statutory period for reply of three (3) months. Accordingly, the application became abandoned on July 31, 2009. On July 31, 2009, a petition under 37 CFR 1.137(b) was filed; however, the petition was dismissed in a decision mailed September 23, 2009. In response the present petition was filed.

The petition satisfies the requirements of 37 CFR 1.137(b) in that petitioner has supplied (1) the reply in the form of payment of the issue fee of $860, (2) the petition fee of $1,620, (3) an adequate statement of unintentional delay, and (4) a terminal disclaimer and fee of $140 as required by 37 CFR 1.137(d). Accordingly, the failure to timely submit the payment of the issue fee as required by the Notice of Allowance and Fee(s) Due is accepted as being unintentionally delayed.

The terminal disclaimer filed October 1, 2009 is accepted and has been made of record. Any continuing application filed from this application must contain a copy of the terminal disclaimer. The copy of the terminal disclaimer must be filed with a cover letter requesting the terminal disclaimer be recorded on the continuing application. A copy of this decision should be attached to the cover letter.

Telephone inquiries concerning this decision should be directed to Alicia Kelley at (571)272-6059.

This application is being referred to the Office of Data Management for processing into a patent.

Chris Bottorff
Petitions Examiner
Office of Petitions

UNITED STATES PATENT AND TRADEMARK OFFICE

Commissioner for Patents
United States Patent and Trademark Office
P.O. Box 1450
Alexandria, VA 22313-1450
www.uspto.gov

COPY MAILED

SEP 20 2007

OFFICE OF PETITIONS

SOCAL IP LAW GROUP LLP
310 N. WESTLAKE BLVD. STE 120
WESTLAKE VILLAGE, CA 91362

In re Application of	:	
Joseph Onyuen LEE, et al	:	
Application No. 29/249,207	:	DECISION ON PETITION
Filed: September 26, 2006	:	TO WITHDRAW
Attorney Docket No. P009-P06617US	:	FROM RECORD
	:	

This is a decision on the Request to Withdraw as attorney or agent of record under 37 C.F.R. § 1.36(b), filed May 14, 2007

The request is **NOT APPROVED**.

The Office cannot approve the request at this time since the reason provided does not meet any of the conditions under the mandatory or permissive categories enumerated in 37 CFR 10.40. Section 10.40 of Title 37 of the Code of Federal Regulation states, "a practitioner shall not withdraw from employment in a proceeding before the Office without permission from the Office." More specifically, 37 CFR 10.40 states, "if paragraph (b) of this section is not applicable, a practitioner may not request permission to withdraw in matter pending before the Office unless such request or such withdrawal is" for one the permissive reasons listed in 37 CFR 10.40(c). The reason set forth in the request, we have terminated our relationship with the owner, does not meet any of the conditions set forth in 37 CFR 10.40.

There are no pending Office actions at the present time.

All future communications from the Office will continue to be directed to the above-listed address until otherwise notified by applicant.

In order to request or take action in a patent matter, the assignee must establish its ownership of the patent to the satisfaction of the Director. In this regard, a Statement under 37 CFR 3.73(b) must have either: (i) documentary evidence of a chain of title from the original owner to the assignee (*e.g.*, copy of an executed assignment), and a statement affirming that the documentary evidence of the chain of title from the original owner to the assignee was or concurrently is being submitted for recordation pursuant to § 3.11; or (ii) a statement specifying where documentary evidence of a chain of title from the original owner to the assignee is recorded in the assignment records of the Office (*e.g.*, reel and frame number).

Telephone inquiries concerning this decision should be directed to Diane Goodwyn at 571-272-6735.

April Wise
Petitions Examiner
Office of Petitions

cc: PORTABLE SOUND LABORATORIES
20123 NORDHOFF STREET
CHATSWORTH, CA 91311

UNITED STATES PATENT AND TRADEMARK OFFICE

Commissioner for Patents
United States Patent and Trademark Office
P.O. Box 1450
Alexandria, VA 22313-1450
www.uspto.gov

MINTZ, LEVIN, COHN, FERRIS, GLOVSKY AND POPEO, P.C
ATTN: PATENT INTAKE CUSTOMER NO. 30623
ONE FINANCIAL CENTER
BOSTON, MA 02111

COPY MAILED

SEP 04 2008

In re Patent of Piva :
Patent No. D562,025 :
Issue Date: February 19, 2008 : Decision on Petition
Application No. 29/249,301 :
Filing Date: September 29, 2006 :
Attorney Docket No. 34106-506-US1 :

This is a decision on the petition under 37 CFR 1.182, filed June 6, 2008, requesting issuance of duplicate Letters Patent for the above-identified application.

The petition is **granted**.

The Publishing Division is directed to issue duplicate Letters Patent.

A copy of this decision is being forwarded to the Office of Data Management for issuance of duplicate Letters Patent.

Telephone inquiries related to the petition should be directed to Petitions Attorney Steven Brantley at (571) 272-3203. Any questions concerning delays in the issuance of the duplicate Letters Patent should be directed to Niomi Farmer at (703) 308-9250 ext. 129.

Charles Steven Brantley
Petitions Attorney
Office of Petitions

cc: Kimberly Terrell (FAX 571-273-9740)
Niomi Farmer, Office of Data Management, (FAX 571-270-9753)

UNITED STATES PATENT AND TRADEMARK OFFICE

Commissioner for Patents
United States Patent and Trademark Office
P.O. Box 1450
Alexandria, VA 22313-1450
www.uspto.gov

Paper No.

EGBERT LAW OFFICES
412 MAIN STREET, 7TH FLOOR
HOUSTON TX 77002

COPY MAILED

JUN 23 2008

OFFICE OF PETITIONS

In re Application of
Kuei-Chih Hsu
Application No. 29/249,410
Filed: October 5, 2006
Attorney Docket No.: 1980-42
Title: ELECTRIC FAN STAND

DECISION ON PETITION
PURSUANT TO
37 C.F.R. § 1.137(B)

This is a decision on the petition filed March 11, 2008, pursuant to 37 C.F.R. § 1.137(b) to revive the above-identified application.

The petition pursuant to 37 C.F.R. § 1.137(b) is **GRANTED.**

The above-identified application became abandoned for failure to submit the issue fee and corrected drawings in a timely manner in reply to the Notice of Allowance and Issue Fee Due, mailed September 6, 2007, which set a shortened statutory period for reply of three months. No response was received, and no extensions of time are permitted for transmitting issue fees or corrected drawings[1]. Accordingly, this application became abandoned on December 7, 2007. A Notice of Abandonment was mailed on January 16, 2008.

A grantable petition pursuant to 37 C.F.R § 1.137(b) must be accompanied by:

(1) The reply required to the outstanding Office action or notice, unless previously filed;
(2) The petition fee as set forth in 37 C.F.R § 1.17(m);
(2) A statement that the entire delay in filing the required reply from the due date for the reply until

1 See MPEP § 710.02(e).

the filing of a grantable petition pursuant to this paragraph was unintentional. The Commissioner may require additional information where there is a question whether the delay was unintentional, and;

(3) Any terminal disclaimer (and fee as set forth in 37 C.F.R § 1.20(d)) required pursuant to paragraph (d) of this section.

With this petition, Petitioner has submitted the issue and petition fees, corrected drawings, the proper statement of unintentional delay, and both a terminal disclaimer and the associated fee.

As such, each of the four requirements of Rule 1.137(b) has been met.

The Office of Patent Publication will be notified of this decision so that the present application can be **processed into a patent.** The Office of Patent Publication will further **enter the terminal disclaimer.**

Petitioner may find it beneficial to view Private PAIR within a fortnight of the present decision to ensure that the revival has been acknowledged by the Office of Patent Publication in response to this decision. It is noted that all inquiries with regard to any failure of that change in status should be directed to the Office of Patent Publication where that change of status must be effected – **the Office of Petitions cannot effectuate a change of status.**

Telephone inquiries regarding *this decision* should be directed to the undersigned at (571) 272-3225[2]. All other inquiries concerning the status of the application should be directed to the Office of Patent Publication at 571-272-4200.

/Paul Shanoski/
Paul Shanoski
Senior Attorney
Office of Petitions

---

2 Petitioner will note that all practice before the Office should be in writing, and the action of the Office will be based exclusively on the written record in the Office. See 37 C.F.R. § 1.2. As such, Petitioner is reminded that no telephone discussion may be controlling or considered authority for any further action(s) of Petitioner.

UNITED STATES PATENT AND TRADEMARK OFFICE

Commissioner for Patents
United States Patent and Trademark Office
P.O. Box 1450
Alexandria, VA 22313-1450
www.uspto.gov

NIDEC CORPORATION
c/o KEATING & BENNETT, LLP
8180 GREENSBORO DRIVE
SUITE 850
MCLEAN VA 22102

COPY MAILED

SEP 0 7 2007

OFFICE OF PETITIONS

In re Application of
Takamasa Yamashita et al
Application No. 29/249,552
Filed: October 12, 2006
Attorney Docket No. 10202.11

: DECISION GRANTING PETITION
: UNDER 37 CFR 1.313(c)(3) (CPA)

This is a decision on the petition under 37 CFR 1.313(c)(2), filed September 5, 2007, which is being treated as a petition under 37 CFR 1.313(c)(3), to withdraw the above-identified application from issue after payment of the issue fee.

The petition is **GRANTED**.

The above-identified application is hereby withdrawn from issue in favor of a continued prosecution application (CPA) under 37 CFR 1.53(d).

Petitioner is advised that the issue fee paid on June 27, 2007 in the parent application is not refundable nor can it be applied towards any new Notice of Allowance which may issue on the CPA filed September 6, 2007.

The petition filed on September 5, 2007 was accompanied by a request for continued examination (RCE) and fee of $790. However, as the RCE practice does not apply to a design application, the filing of the RCE was improper and will not be entered. Accordingly, the $790 fee submitted therefor will be refunded to petitioner's credit card.

The filing fees due for the CPA ($430) will be charged to petitioner's deposit account as authorized.

Telephone inquiries should be directed to the undersigned at (571) 272-3218.

This matter is being referred to Technology Center AU 2912 for processing of the CPA filed on September 6, 2007 and consideration of the Information Disclosure Statement filed September 5, 2007.

Frances Hicks
Petitions Examiner
Office of Petitions

UNITED STATES PATENT AND TRADEMARK OFFICE

Commissioner for Patents
United States Patent and Trademark Office
P.O. Box 1450
Alexandria, VA 22313-1450
www.uspto.gov

MOTOROLA INC
600 NORTH US HIGHWAY 45
W4 - 39Q
LIBERTYVILLE IL 60048-5343

COPY MAILED

APR 24 2009

OFFICE OF PETITIONS

In re Application of :
Cheol W. PARK et al. :
Application No. 29/249,566 : DECISION ON PETITION
Filed: October 12, 2006 :
Attorney Docket No. **CS26462RL P01** :

This is a decision on the petition under 37 CFR 1.137(b), filed March 17, 2009, to revive the above-identified design application.

The petition is **GRANTED**.

The application became abandoned for failure to timely file corrected drawings, as required by the Notice of Allowance and Fee(s) Due, mailed September 19, 2008, which set a statutory period for reply of three (3) months. Accordingly, the application became abandoned on December 20, 2008. A Notice of Abandonment was mailed on January 14, 2009.

The petition satisfies the requirements of 37 CFR 1.137(b) in that petitioner has supplied (1) the reply in the form of the corrected formal drawings, (2) the petition fee of $1620, (3) a proper statement of unintentional delay, and (4) a terminal disclaimer and fee as required by 37 CFR 1.137(d). Accordingly, the failure to timely file corrected drawings as required by the Notice of September 19, 2008 is accepted as being unintentionally delayed.

The terminal disclaimer is accepted and has been made of record. Any continuing application filed from this application must contain a copy of the terminal disclaimer. The copy of the terminal disclaimer must be filed with a cover letter requesting the terminal disclaimer be recorded on the continuing application. A copy of this decision should be attached to the cover letter.

Telephone inquiries concerning this decision should be directed to Tredelle Jackson at (571) 272-2783.

This application is being referred to the Office of Data Management for further processing in accordance with this decision on petition.

Ramesh Krishnamurthy
Petitions Examiner
Office of Petitions

UNITED STATES PATENT AND TRADEMARK OFFICE

Commissioner for Patents
United States Patent and Trademark Office
P.O. Box 1450
Alexandria, VA 22313-1450
www.uspto.gov

SIERRA PATENT GROUP, LTD.
1663 HWY 395, SUITE 201
MINDEN NV 89423

COPY MAILED

APR 0 3 2008

OFFICE OF PETITIONS

In re Application of :
Hartmut S. Engel :
Application No. 29/249569 : NOTICE
Filed: 10/12/2006 :
Attorney Docket No. MAN-022 :

This is a notice regarding your request for acceptance of a fee deficiency submission under 37 CFR 1.28.

The Office no longer investigates or rejects original or reissue applications under 37 CFR 1.56. **1098 Off. Gaz. Pat. Office 502 (January 3, 1989)**. Therefore, nothing in this Notice is intended to imply that an investigation was done.

Your fee deficiency submission under 37 CFR 1.28 is hereby **ACCEPTED**.

This application is no longer entitled to small entity status. Accordingly, all future fees paid in this application must be paid at the large entity rate.

Inquiries related to this communication should be directed to the undersigned at (571) 272-3231.

D Wood

Douglas I. Wood
Attorney
Office of Petitions

UNITED STATES PATENT AND TRADEMARK OFFICE

Commissioner for Patents
United States Patent and Trademark Office
P.O. Box 1450
Alexandria, VA 22313-1450
www.uspto.gov

SUTHERLAND ASBILL & BRENNAN LLP
999 PEACHTREE STREET, N.E.
ATLANTA GA 30309

COPY MAILED

SEP 10 2007

OFFICE OF PETITIONS

In re Application of
Brandon Leck et al.
Application No. 29/249,600
Filed: October 13, 2006
Attorney Docket No. **25040-1740**

DECISION ON PETITION
UNDER § 1.183

This is a decision on the petition, filed August 3, 2007, under 37 CFR 1.47(a), which is being treated under 37 CFR § 1.183 for acceptance of a supplemental declaration without the inclusion of the signatures of an inventor as required by §§ 37 CFR 1.67 and 1.63.[1]

The petition is **DISMISSED**.

Petitioner is given TWO MONTHS from the mailing date of this decision to respond, correcting the below-noted deficiencies. Any response should be entitled "Request for Reconsideration of Petition Under 37 CFR 1.183" and may include an oath or declaration executed by the inventor. **Failure to respond will result in abandonment of the application.** Any extensions of time will be governed by 37 CFR 1.136(a).

All joint inventors, signed the original declaration for patent filed in this application, pursuant to § 1.63(d), however, a substitute declaration was required by the Notice of Allowability mailed May 29, 2007 to correct a defect.

Petitioners have argued that after diligent effort, joint inventor Keith Shadlock, can not be located or found in that correspondences sent to joint inventor Keith Shadlock by way of email and FEDEX have been returned undeliverable. However, no additional efforts have been employed to locate Mr. Shadlock. In view of the evidence presented, petitioners have not provided evidence that diligent efforts have been made to locate non-signing inventor Shadlock.[2]

---

[1] Once an application has received a fully executed oath or declaration and been placed on the files for examination, the provisions of 37 CFR 1.47 no longer apply. Rather, the remedy for treating an inventor's refusal to also sign a supplemental oath or declaration or to provide all information is a waiver of 37 CFR 1.67 and 1.63. See MPEP 603.

[2] MPEP 409.03(d).

Petitioners must provide details, in an affidavit or declaration of facts by a person with first hand knowledge of the details, of the **additional efforts** to locate Mr. Shadlock, such as Internet, e-mail, or telephone directory searches, which have been undertaken to locate him, send or give a copy of the application papers to him, and request that he sign and return the declaration. If repeated attempts to contact the non-signing inventor by telephone, mail, and e-mail, are unsuccessful, petitioners will have established that he cannot be found despite diligent efforts.

The supplemental declaration provided is therefore not in compliance with 37 CFR § 1.67.

If after proper presentation, Mr. Shadlock refuses in writing to sign the declaration, petitioners should provide a copy of that written refusal with any renewed petition. If a verbal refusal to sign is made to a person, details should be given in an affidavit or declaration of facts by a person having first hand knowledge of the facts of refusal.

Finally, if it is found that Mr. Shadlock is residing at a different address than that listed in the initial petition, petitioners should provide a new statement of the last known address in a renewed petition as well as a corrected supplemental th or declaration with a proper last known address including the country of citizenship if appropriate.

Further correspondence with respect to this matter should be addressed as follows:

By mail: Mail Stop Petition
Commissioner for Patents
P.O. Box 1450
Alexandria, VA 22313-1450

By FAX: (571) 273-8300

Telephone inquiries concerning this matter may be directed to the undersigned Petitions Attorney at (571) 272-3212.

Patricia Faison-Ball

Patricia Faison-Ball
Senior Petitions Attorney
Office of Petitions

UNITED STATES PATENT AND TRADEMARK OFFICE

Commissioner for Patents
United States Patent and Trademark Office
P.O. Box 1450
Alexandria, VA 22313-1450
www.uspto.gov

SUTHERLAND ASBILL & BRENNAN LLP
999 PEACHTREE STREET, N.E.
ATLANTA GA 30309

COPY MAILED

NOV 15 2007

OFFICE OF PETITIONS

In re Application of
Brandon Leck et al.
Application No. 29/249,600
Filed: October 13, 2006
Attorney Docket No. **25040-1740**

DECISION ON PETITION
UNDER § 1.183

This is a decision on the request for reconsideration filed October 9, 2007, under 37 CFR § 1.183, for acceptance of a supplemental declaration without the inclusion of the signatures of an inventor as required by §§ 37 CFR 1.67 and 1.63.[1]

The petition is **GRANTED**.

All joint inventors, signed the original declaration for patent filed in this application, pursuant to § 1.63(d), however, a substitute declaration was required by the Notice of Allowability mailed May 29, 2007 to correct a defect.

A petition filed August 3, 2007 was dismissed in a decision mailed September 10, 2007 because while petitioners argued that after diligent effort joint inventor Keith Shadlock, could not be located or found, it wasn't shown that additional efforts were employed to locate Mr. Shadlock. In view of the evidence presented, petitioners had not provided evidence that diligent efforts had been made to locate non-signing inventor Shadlock.[2]

Comes now Petitioner with additional evidence of diligent efforts to locate non-signing inventor Shadlock. The evidence provided shows that the supplemental declaration was sent to all joint inventors but that an email sent to the last known email address for Mr. Shadlock was undeliverable and that a package sent via FEDEX was also returned undeliverable. Petitioner's efforts to locate a mailing address and telephone number for Mr. Shadlock by way of the internet is also noted. Additional efforts although employed to locate Mr. Shadlock have been unsuccessful thus petitioner's have made an adequate showing that waiver of the requirement for inventor Shadlock's signature on

[1]Once an application has received a fully executed oath or declaration and been placed on the files for examination, the provisions of 37 CFR 1.47 no longer apply. Rather, the remedy for treating an inventor's refusal to also sign a supplemental oath or declaration or to provide all information is a waiver of 37 CFR 1.67 and 1.63. See MPEP 603.

[2]MPEP 409.03(d).

the supplemental declaration is warranted.

The petition includes the last known address of the non-signing inventor and a fee in the amount of $200.00 for the petition was filed with the original petition on August 3, 2007. Petitioners are advised however that the fee for a petition under 37 CFR 1.183 is set at $400.00. Therein, petitioner's deposit account no. 19-5029 has been charged in the amount of $200.00 to make up the difference between that paid and that which is due.

The supplemental declaration has been reviewed and found in compliance with §§ 1.67 and 1.63. In view of the foregoing, it is concluded that waiver of the requirement that the supplemental declaration be signed by joint inventor Shadlock is appropriate.

This matter is being referred to the Publishing Division.

Telephone inquiries concerning this matter may be directed to the undersigned Petitions Attorney at (571) 272-3212.

Patricia Faison-Ball

Patricia Faison-Ball
Senior Petitions Attorney
Office of Petitions

UNITED STATES PATENT AND TRADEMARK OFFICE

Commissioner for Patents
United States Patent and Trademark Office
P.O. Box 1450
Alexandria, VA 22313-1450
www.uspto.gov

BANNER & WITCOFF, LTD.
1100 13th STREET, N.W.
SUITE 1200
WASHINGTON, DC 20005-4051

COPY MAILED

MAR 3 1 2008

In re Application of :
Louise TRAFICANTI :
Application No. 29/249,615 : DECISION ON PETITION
Filed: October 13, 2006 :
Attorney Docket No. 006846.00011 :

This is a decision on the petition under the unintentional provisions of 37 CFR 1.137(b), filed January 03, 2008, to revive the above-identified application.

The petition is **GRANTED**.

This application became abandoned for failure to submit the issue fee in a timely manner in reply to the Notice of Allowance and Fee(s) Due, mailed October 02, 2007. Accordingly, the date of abandonment of this application is January 03, 2008.

The petition satisfies the requirements of 37 CFR 1.137(b) in that petitioner has supplied (1) the reply in the form of payment of the Issue Fee of $820.00, (2) the petition fee of $1,540.00; (3) a proper statement of unintentional delay; and (4) terminal disclaimer and fee of $130.00. Accordingly, the Issue Fee payment is accepted as being unintentionally delayed.

Telephone inquiries concerning this decision should be directed to the undersigned at (571) 272-4231.

This application is being referred to Publishing Division for processing into a patent.

Michelle R. Eason
Paralegal Specialist
Office of Petitions

PTO/SB/27 (09-04)
Approved for use through 07/31/2006. OMB 0651-0031
U.S. Patent and Trademark Office; U.S. DEPARTMENT OF COMMERCE
Under the Paperwork Reduction Act of 1995, no persons are required to respond to a collection of information unless it displays a valid OMB control number.

REQUEST FOR EXPEDITED EXAMINATION OF A DESIGN APPLICATION (37 CFR 1.155)

Application Number	29/249,618
Filing Date	October 13, 2006
First Named Inventor	Louise Traficanti
Title	SET OF BEDDING
Atty Docket Number	006846.00014

ADDRESS TO:
MAIL STOP EXPEDITED DESIGN
COMMISSIONER FOR PATENTS
P.O. Box 1450
Alexandria, VA 22313-1450

This is a request for expedited examination of a design application under 37 CFR 1.155.

NOTE: If the Request made by this form accompanies original application papers, include form PTO/SB/18 "Design Patent Application Transmittal" or its equivalent.

A preexamination search was conducted. The field of search was:

D6/595, 596, 597, 598, 599, 600, 601, 602, and 603; 5/482, 486, 490, 495, 496, 497, 498, 499, 500, 501, and 502

Related applications: 29/249,615, 29/249,616, 29/249,617, 29/249,619 and 29/249,620

If not previously filed for the above-identified application, the following items required by 37 CFR 1.155 are enclosed:
Formal drawings (see 37 CFR 1.84).
The fee set forth in 37 CFR 1.17(k).
An information disclosure statement in compliance with 37 CFR 1.98.

1-18-07
Approved
Jacqueline M. Stone
Jacqueline M. Stone, Director
Technology Center 2900

Signature

1/17/07
Date

Robert S. Katz
Typed or printed name

36402
Registration Number, if applicable

(202) 824-3000
Telephone Number

WARNING: Information on this form may become public. Credit card information should not be included on this form. Provide credit card information and authorization on PTO-2038.

This collection of information is required by 37 CFR 1.155. The information is required to obtain or retain a benefit by the public which is to file (and by the USPTO to process) an application. Confidentiality is governed by 35 U.S.C. 122 and 37 CFR 1.11 and 1.14. This collection is estimated to take 6 minutes to complete, including gathering, preparing, and submitting the completed application form to the USPTO. Time will vary depending upon the individual case. Any comments on the amount of time you require to complete this form and/or suggestions for reducing this burden, should be sent to the Chief Information Officer, U.S. Patent and Trademark Office, U.S. Department of Commerce, P.O. Box 1450, Alexandria, VA 22313-1450. DO NOT SEND FEES OR COMPLETED FORMS TO THIS ADDRESS. SEND TO: **Mail Stop Expedited Design, Commissioner for Patents, P.O. Box 1450, Alexandria, VA 22313-1450.**
If you need assistance in completing the form, call 1-800-PTO-9199 and select option 2.

PTO/SB/27 (09-06)
Approved for use through 03/31/2007. OMB 0651-0031
U.S. Patent and Trademark Office; U.S DEPARTMENT OF COMMERCE
Under the Paperwork Reduction ACT of 1995, no persons are required to respond to collection of information unless it displays a valid OMB control number.

REQUEST FOR EXPEDITED EXAMINATION OF A DESIGN APPLICATION (37 CFR 1.155)

Application Number	TBA 29/249 621
Filing Date	October 13, 2006
First Named Inventor	Andrew Oldknow
Title	Portion of a Golf Club Head for a Putter
Atty Docket Number	015127.00776

ADDRESS TO:
MAIL STOP EXPEDITED DESIGN
COMMISSIONER FOR PATENTS
P.O. Box 1450
Alexandria, VA 22313-1450

Approved
Jacqueline M. Stone 10/25/06
Jacqueline M. Stone, Director
Technology Center 1700/2900

This is a request for expedited examination of a design application under 37 CFR 1.155.

NOTE: If the Request made by this form accompanies original application papers, include form PTO/SB/18 "Design Patent Application Transmittal" or its equivalent.

A preexamination search was conducted. The field of search was:

Class D21, Subclasses 736, 737, 738, 739, 740, 741, 742, 743, 744, 745, 746

Class 473, Subclasses 340, 341

Related applications: Attorney Docket Nos. 015127.00777; 015127.00778 and 015127.00779 all filed 10-13-06

If not previously filed for the above-identified application, the following items required by 37 CFR 1.155 are enclosed:

- Formal drawings (see 37 CFR 1.84).
- The fee set forth in 37 CFR 1.17(k).
- An information disclosure statement in compliance with 37 CFR 1.98.

/Robert S. Katz/ — Signature

October 13, 2006 — Date

Robert S. Katz — Typed or printed name

36,402 — Registration Number, if applicable

202-824-3000 — Telephone Number

WARNING: Information on this form may become public. Credit card information should not be included on this form. Provide credit card information and authorization on PTO-2038.

This collection of information is required by 37 CFR 1.155. The information is required to obtain or retain a benefit by the public which is to file (and by the USPTO to process) an application. Confidentiality is governed by 35 U.S.C. 122 and 37 CFR 1.11 and 1.14. This collection is estimated to take 6 minutes to complete, including gathering, preparing, and submitting the completed application form to the USPTO. Time will vary depending upon the individual case. Any comments on the amount of time you require to complete this form and/or suggestions for reducing this burden, should be sent to the Chief Information Officer, U.S. Patent and Trademark Office, U.S. Department of Commerce, P.O. Box 1450, Alexandria, VA 22313-1450. DO NOT SEND FEES OR COMPLETED FORMS TO THIS ADDRESS. SEND TO: Commissioner for Patents, P.O. Box 1450, Alexandria, VA 22313-1450.

If you need assistance in completing the form, call 1-800-PTO-9199 and select option 2.

PTO/SB/27 (09-06)
Approved for use through 03/31/2007. OMB 0651-0031
U.S. Patent and Trademark Office; U.S DEPARTMENT OF COMMERCE
Under the Paperwork Reduction ACT of 1995, no persons are required to respond to collection of information unless it displays a valid OMB control number.

REQUEST FOR EXPEDITED EXAMINATION OF A DESIGN APPLICATION (37 CFR 1.155)

Application Number	TBA 29/249,622
Filing Date	October 13, 2006
First Named Inventor	Andrew Oldknow
Title	Portion of a Golf Club Head for a Putter
Atty Docket Number	015127.00777

ADDRESS TO:

MAIL STOP EXPEDITED DESIGN
COMMISSIONER FOR PATENTS
P.O. Box 1450
Alexandria, VA 22313-1450

Approved

Jacqueline M. Stone

Jacqueline M. Stone, Director
Technology Center 1700/2900

10/25/06

This is a request for expedited examination of a design application under 37 CFR 1.155.

NOTE: If the Request made by this form accompanies original application papers, include form PTO/SB/18 "Design Patent Application Transmittal" or its equivalent.

A preexamination search was conducted. The field of search was:

Class D21, Subclasses 736, 737, 738, 739, 740, 741, 742, 743, 744, 745, 746

Class 473, Subclasses 340, 341

Related applications: Attorney Docket Nos. 015127.00776; 015127.00778 and 015127.00779 all filed 10-13-06

If not previously filed for the above-identified application, the following items required by 37 CFR 1.155 are enclosed:

- Formal drawings (see 37 CFR 1.84).
- The fee set forth in 37 CFR 1.17(k).
- An information disclosure statement in compliance with 37 CFR 1.98.

/Robert S. Katz/	October 13, 2006
Signature	Date
Robert S. Katz	36,402
Typed or printed name	Registration Number, if applicable
202-824-3000	
Telephone Number	

WARNING: Information on this form may become public. Credit card information should not be included on this form. Provide credit card information and authorization on PTO-2038.

This collection of information is required by 37 CFR 1.155. The information is required to obtain or retain a benefit by the public which is to file (and by the USPTO to process) an application. Confidentiality is governed by 35 U.S.C. 122 and 37 CFR 1.11 and 1.14. This collection is estimated to take 6 minutes to complete, including gathering, preparing, and submitting the completed application form to the USPTO. Time will vary depending upon the individual case. Any comments on the amount of time you require to complete this form and/or suggestions for reducing this burden, should be sent to the Chief Information Officer, U.S. Patent and Trademark Office, U.S. Department of Commerce, P.O. Box 1450, Alexandria, VA 22313-1450. DO NOT SEND FEES OR COMPLETED FORMS TO THIS ADDRESS. SEND TO: Commissioner for Patents, P.O. Box 1450, Alexandria, VA 22313-1450.

If you need assistance in completing the form, call 1-800-PTO-9199 and select option 2.

PTO/SB/27 (09-06)
Approved for use through 03/31/2007. OMB 0651-0031
U.S. Patent and Trademark Office; U.S DEPARTMENT OF COMMERCE
Under the Paperwork Reduction ACT of 1995, no persons are required to respond to collection of information unless it displays a valid OMB control number.

REQUEST FOR EXPEDITED EXAMINATION OF A DESIGN APPLICATION (37 CFR 1.155)

Application Number	TBA 29/249,623
Filing Date	October 13, 2006
First Named Inventor	Andrew Oldknow et al.
Title	Portion of a Golf Club Head for a Putter
Atty Docket Number	015127.00778

ADDRESS TO:

MAIL STOP EXPEDITED DESIGN
COMMISSIONER FOR PATENTS
P.O. Box 1450
Alexandria, VA 22313-1450

Approved 10/25/06
(Jacqueline M. Stone)
Jacqueline M. Stone, Director
Technology Center 1700/2900

This is a request for expedited examination of a design application under 37 CFR 1.155.

NOTE: If the Request made by this form accompanies original application papers, include form PTO/SB/18 "Design Patent Application Transmittal" or its equivalent.

A preexamination search was conducted. The field of search was:

Class D21, Subclasses 736, 737, 738, 739, 740, 741, 742, 743, 744, 745, 746

Class 473, Subclasses 340, 341

Related applications: Attorney Docket Nos. 015127.00776; 015127.00777 and 015127.00779 all filed 10-13-06

If not previously filed for the above-identified application, the following items required by 37 CFR 1.155 are enclosed:

- Formal drawings (see 37 CFR 1.84).
- The fee set forth in 37 CFR 1.17(k).
- An information disclosure statement in compliance with 37 CFR 1.98.

/Robert S. Katz/	October 13, 2006
Signature	Date
Robert S. Katz	36,402
Typed or printed name	Registration Number, if applicable
202-824-3000	
Telephone Number	

WARNING: Information on this form may become public. Credit card information should not be included on this form. Provide credit card information and authorization on PTO-2038.

This collection of information is required by 37 CFR 1.155. The information is required to obtain or retain a benefit by the public which is to file (and by the USPTO to process) an application. Confidentiality is governed by 35 U.S.C. 122 and 37 CFR 1.11 and 1.14. This collection is estimated to take 6 minutes to complete, including gathering, preparing, and submitting the completed application form to the USPTO. Time will vary depending upon the individual case. Any comments on the amount of time you require to complete this form and/or suggestions for reducing this burden, should be sent to the Chief Information Officer, U.S. Patent and Trademark Office, U.S. Department of Commerce, P.O. Box 1450, Alexandria, VA 22313-1450. DO NOT SEND FEES OR COMPLETED FORMS TO THIS ADDRESS. SEND TO: Commissioner for Patents, P.O. Box 1450, Alexandria, VA 22313-1450.

If you need assistance in completing the form, call 1-800-PTO-9199 and select option 2.

PTO/SB/27 (09-06)
Approved for use through 03/31/2007. OMB 0651-0031
U.S. Patent and Trademark Office; U.S DEPARTMENT OF COMMERCE
Under the Paperwork Reduction ACT of 1995, no persons are required to respond to collection of information unless it displays a valid OMB control number.

REQUEST FOR EXPEDITED EXAMINATION OF A DESIGN APPLICATION (37 CFR 1.155)

Application Number	TBA 29/249,624
Filing Date	October 13, 2006
First Named Inventor	Andrew Oldknow
Title	Portion of a Golf Club Head for a Putter
Atty Docket Number	015127.00779

ADDRESS TO:
MAIL STOP EXPEDITED DESIGN
COMMISSIONER FOR PATENTS
P.O. Box 1450
Alexandria, VA 22313-1450

Approved
Jacqueline M. Stone 10/25/06
Jacqueline M. Stone, Director
Technology Center 1700/2900

This is a request for expedited examination of a design application under 37 CFR 1.155.

NOTE: If the Request made by this form accompanies original application papers, include form PTO/SB/18 "Design Patent Application Transmittal" or its equivalent.

A preexamination search was conducted. The field of search was:

Class D21, Subclasses 736, 737, 738, 739, 740, 741, 742, 743, 744, 745, 746

Class 473, Subclasses 340, 341

Related applications: Attorney Docket Nos. 015127.00776; 015127.00778 and 015127.00777 all filed 10-13-06

If not previously filed for the above-identified application, the following items required by 37 CFR 1.155 are enclosed:

- Formal drawings (see 37 CFR 1.84).
- The fee set forth in 37 CFR 1.17(k).
- An information disclosure statement in compliance with 37 CFR 1.98.

/Robert S. Katz/	October 13, 2006
Signature	Date
Robert S. Katz	36,402
Typed or printed name	Registration Number, if applicable
202-824-3000	
Telephone Number	

WARNING: Information on this form may become public. Credit card information should not be included on this form. Provide credit card information and authorization on PTO-2038.

This collection of information is required by 37 CFR 1.155. The information is required to obtain or retain a benefit by the public which is to file (and by the USPTO to process) an application. Confidentiality is governed by 35 U.S.C. 122 and 37 CFR 1.11 and 1.14. This collection is estimated to take 6 minutes to complete, including gathering, preparing, and submitting the completed application form to the USPTO. Time will vary depending upon the individual case. Any comments on the amount of time you require to complete this form and/or suggestions for reducing this burden, should be sent to the Chief Information Officer, U.S. Patent and Trademark Office, U.S. Department of Commerce, P.O. Box 1450, Alexandria, VA 22313-1450. DO NOT SEND FEES OR COMPLETED FORMS TO THIS ADDRESS. SEND TO: Commissioner for Patents, P.O. Box 1450, Alexandria, VA 22313-1450.

If you need assistance in completing the form, call 1-800-PTO-9199 and select option 2.

PTO/SB/27 (09-06)
Approved for use through 03/31/2007. OMB 0651-0031
U.S. Patent and Trademark Office; U.S DEPARTMENT OF COMMERCE
Under the Paperwork Reduction ACT of 1995, no persons are required to respond to collection of information unless it displays a valid OMB control number.

REQUEST FOR EXPEDITED EXAMINATION OF A DESIGN APPLICATION (37 CFR 1.155)

Application Number	TBA 29/249,625
Filing Date	October 13, 2006
First Named Inventor	Andrew Oldknow
Title	Portion of a Golf Club Head
Atty Docket Number	015127.00786

ADDRESS TO:
MAIL STOP EXPEDITED DESIGN
COMMISSIONER FOR PATENTS
P.O. Box 1450
Alexandria, VA 22313-1450

Approved 10/25/06
Jacqueline M. Stone
Jacqueline M. Stone, Director
Technology Center 1700/2900

This is a request for expedited examination of a design application under 37 CFR 1.155.

NOTE: If the Request made by this form accompanies original application papers, include form PTO/SB/18 "Design Patent Application Transmittal" or its equivalent.

A preexamination search was conducted. The field of search was:

Class D21, Subclasses 733, 747, 748, 749, 750, 751, 752, 753, 759

Class 473, Subclasses 287, 290, 291, 324, 325, 326, 327, 328, 329, 330, 331, 349, 350

Related applications: Attorney Docket Nos. 015127.00787, 015127.00788, 015127.00790, 015127.00793 and 015127.00794 all filed 10/13/2006

If not previously filed for the above-identified application, the following items required by 37 CFR 1.155 are enclosed:

- Formal drawings (see 37 CFR 1.84).
- The fee set forth in 37 CFR 1.17(k).
- An information disclosure statement in compliance with 37 CFR 1.98.

/Robert S. Katz/	October 13, 2006
Signature	Date
Robert S. Katz	36,402
Typed or printed name	Registration Number, if applicable
202-824-3000	
Telephone Number	

WARNING: Information on this form may become public. Credit card information should not be included on this form. Provide credit card information and authorization on PTO-2038.

This collection of information is required by 37 CFR 1.155. The information is required to obtain or retain a benefit by the public which is to file (and by the USPTO to process) an application. Confidentiality is governed by 35 U.S.C. 122 and 37 CFR 1.11 and 1.14. This collection is estimated to take 6 minutes to complete, including gathering, preparing, and submitting the completed application form to the USPTO. Time will vary depending upon the individual case. Any comments on the amount of time you require to complete this form and/or suggestions for reducing this burden, should be sent to the Chief Information Officer, U.S. Patent and Trademark Office, U.S. Department of Commerce, P.O. Box 1450, Alexandria, VA 22313-1450. DO NOT SEND FEES OR COMPLETED FORMS TO THIS ADDRESS. SEND TO: Commissioner for Patents, P.O. Box 1450, Alexandria, VA 22313-1450.

If you need assistance in completing the form, call 1-800-PTO-9199 and select option 2.

PTO/SB/27 (09-06)
Approved for use through 03/31/2007. OMB 0651-0031
U.S. Patent and Trademark Office; U.S DEPARTMENT OF COMMERCE
Under the Paperwork Reduction ACT of 1995, no persons are required to respond to collection of information unless it displays a valid OMB control number.

REQUEST FOR EXPEDITED EXAMINATION OF A DESIGN APPLICATION (37 CFR 1.155)

Application Number	TBA 29/249,626
Filing Date	October 13, 2006
First Named Inventor	Andrew Oldknow
Title	Portion of a Golf Club Head
Atty Docket Number	015127.00787

ADDRESS TO:
MAIL STOP EXPEDITED DESIGN
COMMISSIONER FOR PATENTS
P.O. Box 1450
Alexandria, VA 22313-1450

Approved 10/25/06
Jacqueline M. Stone
Jacqueline M. Stone, Director
Technology Center 1700/2900

This is a request for expedited examination of a design application under 37 CFR 1.155.

NOTE: If the Request made by this form accompanies original application papers, include form PTO/SB/18 "Design Patent Application Transmittal" or its equivalent.

A preexamination search was conducted. The field of search was:

Class D21, Subclasses 733, 747, 748, 749, 750, 751, 752, 753, 759

Class 473, Subclasses 287, 290, 291, 324, 325, 326, 327, 328, 329, 330, 331, 349, 350

Related applications: Attorney Docket Nos. 015127.00786, 015127.00788, 015127.00790, 015127.00793 and 015127.00794 all filed 10/13/2006

If not previously filed for the above-identified application, the following items required by 37 CFR 1.155 are enclosed:

- Formal drawings (see 37 CFR 1.84).
- The fee set forth in 37 CFR 1.17(k).
- An information disclosure statement in compliance with 37 CFR 1.98.

/Robert S. Katz/	October 13, 2006
Signature	Date
Robert S. Katz	36,402
Typed or printed name	Registration Number, if applicable
202-824-3000	
Telephone Number	

WARNING: Information on this form may become public. Credit card information should not be included on this form. Provide credit card information and authorization on PTO-2038.

This collection of information is required by 37 CFR 1.155. The information is required to obtain or retain a benefit by the public which is to file (and by the USPTO to process) an application. Confidentiality is governed by 35 U.S.C. 122 and 37 CFR 1.11 and 1.14. This collection is estimated to take 6 minutes to complete, including gathering, preparing, and submitting the completed application form to the USPTO. Time will vary depending upon the individual case. Any comments on the amount of time you require to complete this form and/or suggestions for reducing this burden, should be sent to the Chief Information Officer, U.S. Patent and Trademark Office, U.S. Department of Commerce, P.O. Box 1450, Alexandria, VA 22313-1450. DO NOT SEND FEES OR COMPLETED FORMS TO THIS ADDRESS. SEND TO: Commissioner for Patents, P.O. Box 1450, Alexandria, VA 22313-1450.

If you need assistance in completing the form, call 1-800-PTO-9199 and select option 2.

PTO/SB/27 (09-06)
Approved for use through 03/31/2007. OMB 0651-0031
U.S. Patent and Trademark Office; U.S DEPARTMENT OF COMMERCE
Under the Paperwork Reduction ACT of 1995, no persons are required to respond to collection of information unless it displays a valid OMB control number.

REQUEST FOR EXPEDITED EXAMINATION OF A DESIGN APPLICATION (37 CFR 1.155)

Application Number	TBA 29/249,627
Filing Date	October 13, 2006
First Named Inventor	Andrew Oldknow
Title	Portion of a Golf Club Head
Atty Docket Number	015127.00788

ADDRESS TO:

MAIL STOP EXPEDITED DESIGN
COMMISSIONER FOR PATENTS
P.O. Box 1450
Alexandria, VA 22313-1450

Approved 10/25/06
Jacqueline M. Stone
Jacqueline M. Stone, Director
Technology Center 1700/2900

This is a request for expedited examination of a design application under 37 CFR 1.155.

NOTE: If the Request made by this form accompanies original application papers, include form PTO/SB/18 "Design Patent Application Transmittal" or its equivalent.

A preexamination search was conducted. The field of search was:

Class D21, Subclasses 733, 747, 748, 749, 750, 751, 752, 753, 759

Class 473, Subclasses 287, 290, 291, 324, 325, 326, 327, 328, 329, 330, 331, 349, 350

Related applications: Attorney Docket Nos. 015127.00786, 015127.00787, 015127.00790, 015127.00793 and 015127.00794 all filed 10/13/2006

If not previously filed for the above-identified application, the following items required by 37 CFR 1.155 are enclosed:

- Formal drawings (see 37 CFR 1.84).
- The fee set forth in 37 CFR 1.17(k).
- An information disclosure statement in compliance with 37 CFR 1.98.

/Robert S. Katz/	October 13, 2006
Signature	Date
Robert S. Katz	36,402
Typed or printed name	Registration Number, if applicable
202-824-3000	
Telephone Number	

WARNING: Information on this form may become public. Credit card information should not be included on this form. Provide credit card information and authorization on PTO-2038.

This collection of information is required by 37 CFR 1.155. The information is required to obtain or retain a benefit by the public which is to file (and by the USPTO to process) an application. Confidentiality is governed by 35 U.S.C. 122 and 37 CFR 1.11 and 1.14. This collection is estimated to take 6 minutes to complete, including gathering, preparing, and submitting the completed application form to the USPTO. Time will vary depending upon the individual case. Any comments on the amount of time you require to complete this form and/or suggestions for reducing this burden, should be sent to the Chief Information Officer, U.S. Patent and Trademark Office, U.S. Department of Commerce, P.O. Box 1450, Alexandria, VA 22313-1450. DO NOT SEND FEES OR COMPLETED FORMS TO THIS ADDRESS. SEND TO: Commissioner for Patents, P.O. Box 1450, Alexandria, VA 22313-1450.

If you need assistance in completing the form, call 1-800-PTO-9199 and select option 2.

PTO/SB/27 (09-06)
Approved for use through 03/31/2007. OMB 0651-0031
U.S. Patent and Trademark Office; U.S DEPARTMENT OF COMMERCE
Under the Paperwork Reduction ACT of 1995, no persons are required to respond to collection of information unless it displays a valid OMB control number.

REQUEST FOR EXPEDITED EXAMINATION OF A DESIGN APPLICATION (37 CFR 1.155)

Application Number	TBA 29/249,628
Filing Date	October 13, 2006
First Named Inventor	Andrew Oldknow
Title	Portion of a Golf Club Head
Atty Docket Number	015127.00790

ADDRESS TO:
MAIL STOP EXPEDITED DESIGN
COMMISSIONER FOR PATENTS
P.O. Box 1450
Alexandria, VA 22313-1450

Approved 10/25/06
Jacqueline M. Stone
Jacqueline M. Stone, Director
Technology Center 1700/2900

This is a request for expedited examination of a design application under 37 CFR 1.155.

NOTE: If the Request made by this form accompanies original application papers, include form PTO/SB/18 "Design Patent Application Transmittal" or its equivalent.

A preexamination search was conducted. The field of search was:

Class D21, Subclasses 733, 747, 748, 749, 750, 751, 752, 753, 759

Class 473, Subclasses 287, 290, 291, 324, 325, 326, 327, 328, 329, 330, 331, 349, 350

Related applications: Attorney Docket Nos. 015127.00786, 015127.00787, 015127.00788, 015127.00791 015127.00792, 015127.00793 and 015127.00794 all filed 10/13/2006

If not previously filed for the above-identified application, the following items required by 37 CFR 1.155 are enclosed:

- Formal drawings (see 37 CFR 1.84).
- The fee set forth in 37 CFR 1.17(k).
- An information disclosure statement in compliance with 37 CFR 1.98.

/Robert S. Katz/	October 13, 2006
Signature	Date
Robert S. Katz	36,402
Typed or printed name	Registration Number, if applicable
202-824-3000	
Telephone Number	

WARNING: Information on this form may become public. Credit card information should not be included on this form. Provide credit card information and authorization on PTO-2038.

This collection of information is required by 37 CFR 1.155. The information is required to obtain or retain a benefit by the public which is to file (and by the USPTO to process) an application. Confidentiality is governed by 35 U.S.C. 122 and 37 CFR 1.11 and 1.14. This collection is estimated to take 6 minutes to complete, including gathering, preparing, and submitting the completed application form to the USPTO. Time will vary depending upon the individual case. Any comments on the amount of time you require to complete this form and/or suggestions for reducing this burden, should be sent to the Chief Information Officer, U.S. Patent and Trademark Office, U.S. Department of Commerce, P.O. Box 1450, Alexandria, VA 22313-1450. DO NOT SEND FEES OR COMPLETED FORMS TO THIS ADDRESS. SEND TO: Commissioner for Patents, P.O. Box 1450, Alexandria, VA 22313-1450.

If you need assistance in completing the form, call 1-800-PTO-9199 and select option 2.

PTO/SB/27 (09-06)
Approved for use through 03/31/2007. OMB 0651-0031
U.S. Patent and Trademark Office; U.S DEPARTMENT OF COMMERCE
Under the Paperwork Reduction ACT of 1995, no persons are required to respond to collection of information unless it displays a valid OMB control number.

REQUEST FOR EXPEDITED EXAMINATION OF A DESIGN APPLICATION (37 CFR 1.155)

Application Number	TBA 29/249,629
Filing Date	October 13, 2006
First Named Inventor	Andrew Oldknow
Title	Portion of a Golf Club Head
Atty Docket Number	015127.00791

ADDRESS TO:
MAIL STOP EXPEDITED DESIGN
COMMISSIONER FOR PATENTS
P.O. Box 1450
Alexandria, VA 22313-1450

Approved 10/25/06
Jacqueline M. Stone
Jacqueline M. Stone, Director
Technology Center 1700/2900

This is a request for expedited examination of a design application under 37 CFR 1.155.

NOTE: If the Request made by this form accompanies original application papers, include form PTO/SB/18 "Design Patent Application Transmittal" or its equivalent.

A preexamination search was conducted. The field of search was:

Class D21, Subclasses 733, 747, 748, 749, 750, 751, 752, 753, 759

Class 473, Subclasses 287, 290, 291, 324, 325, 326, 327, 328, 329, 330, 331, 349, 350

Related applications: Attorney Docket Nos. 015127.00790 and 015127.00792 both filed 10/13/2006

If not previously filed for the above-identified application, the following items required by 37 CFR 1.155 are enclosed:

- Formal drawings (see 37 CFR 1.84).
- The fee set forth in 37 CFR 1.17(k).
- An information disclosure statement in compliance with 37 CFR 1.98.

/Robert S. Katz/	October 13, 2006
Signature	Date
Robert S. Katz	36,402
Typed or printed name	Registration Number, if applicable
202-824-3000	
Telephone Number	

WARNING: Information on this form may become public. Credit card information should not be included on this form. Provide credit card information and authorization on PTO-2038.

This collection of information is required by 37 CFR 1.155. The information is required to obtain or retain a benefit by the public which is to file (and by the USPTO to process) an application. Confidentiality is governed by 35 U.S.C. 122 and 37 CFR 1.11 and 1.14. This collection is estimated to take 6 minutes to complete, including gathering, preparing, and submitting the completed application form to the USPTO. Time will vary depending upon the individual case. Any comments on the amount of time you require to complete this form and/or suggestions for reducing this burden, should be sent to the Chief Information Officer, U.S. Patent and Trademark Office, U.S. Department of Commerce, P.O. Box 1450, Alexandria, VA 22313-1450. DO NOT SEND FEES OR COMPLETED FORMS TO THIS ADDRESS. SEND TO: Commissioner for Patents, P.O. Box 1450, Alexandria, VA 22313-1450.

If you need assistance in completing the form, call 1-800-PTO-9199 and select option 2.

PTO/SB/27 (09-06)
Approved for use through 03/31/2007. OMB 0651-0031
U.S. Patent and Trademark Office; U.S DEPARTMENT OF COMMERCE
Under the Paperwork Reduction ACT of 1995, no persons are required to respond to collection of information unless it displays a valid OMB control number.

REQUEST FOR EXPEDITED EXAMINATION OF A DESIGN APPLICATION (37 CFR 1.155)

Application Number	TBA 29/249,630
Filing Date	October 13, 2006
First Named Inventor	Andrew Oldknow
Title	Portion of a Golf Club Head
Atty Docket Number	015127.00792

ADDRESS TO:
MAIL STOP EXPEDITED DESIGN
COMMISSIONER FOR PATENTS
P.O. Box 1450
Alexandria, VA 22313-1450

Approved
Jacqueline M. Stone 10/25/06
Jacqueline M. Stone, Director
Technology Center 1700/2900

This is a request for expedited examination of a design application under 37 CFR 1.155.

NOTE: If the Request made by this form accompanies original application papers, include form PTO/SB/18 "Design Patent Application Transmittal" or its equivalent.

A preexamination search was conducted. The field of search was:

Class D21, Subclasses 733, 747, 748, 749, 750, 751, 752, 753, 759

Class 473, Subclasses 287, 290, 291, 324, 325, 326, 327, 328, 329, 330, 331, 349, 350

Related applications: Attorney Docket Nos. 015127.00790 and 015127.00791 both filed 10/13/2006

If not previously filed for the above-identified application, the following items required by 37 CFR 1.155 are enclosed:

- Formal drawings (see 37 CFR 1.84).
- The fee set forth in 37 CFR 1.17(k).
- An information disclosure statement in compliance with 37 CFR 1.98.

/Robert S. Katz/	October 13, 2006
Signature	Date
Robert S. Katz	36,402
Typed or printed name	Registration Number, if applicable
202-824-3000	
Telephone Number	

WARNING: Information on this form may become public. Credit card information should not be included on this form. Provide credit card information and authorization on PTO-2038.

This collection of information is required by 37 CFR 1.155. The information is required to obtain or retain a benefit by the public which is to file (and by the USPTO to process) an application. Confidentiality is governed by 35 U.S.C. 122 and 37 CFR 1.11 and 1.14. This collection is estimated to take 6 minutes to complete, including gathering, preparing, and submitting the completed application form to the USPTO. Time will vary depending upon the individual case. Any comments on the amount of time you require to complete this form and/or suggestions for reducing this burden, should be sent to the Chief Information Officer, U.S. Patent and Trademark Office, U.S. Department of Commerce, P.O. Box 1450, Alexandria, VA 22313-1450. DO NOT SEND FEES OR COMPLETED FORMS TO THIS ADDRESS. SEND TO: Commissioner for Patents, P.O. Box 1450, Alexandria, VA 22313-1450.

If you need assistance in completing the form, call 1-800-PTO-9199 and select option 2.

PTO/SB/27 (09-06)
Approved for use through 03/31/2007. OMB 0651-0031
U.S. Patent and Trademark Office; U.S DEPARTMENT OF COMMERCE
Under the Paperwork Reduction ACT of 1995, no persons are required to respond to collection of information unless it displays a valid OMB control number.

REQUEST FOR EXPEDITED EXAMINATION OF A DESIGN APPLICATION (37 CFR 1.155)

Application Number	TBA 29/249,631
Filing Date	October 13, 2006
First Named Inventor	Andrew Oldknow
Title	Portion of a Golf Club Head for a Putter
Atty Docket Number	015127.00782

ADDRESS TO:
MAIL STOP EXPEDITED DESIGN
COMMISSIONER FOR PATENTS
P.O. Box 1450
Alexandria, VA 22313-1450

Approved 10/25/06
Jacqueline M. Stone
Jacqueline M. Stone, Director
Technology Center 1700/2900

This is a request for expedited examination of a design application under 37 CFR 1.155.

NOTE: If the Request made by this form accompanies original application papers, include form PTO/SB/18 "Design Patent Application Transmittal" or its equivalent.

A preexamination search was conducted. The field of search was:

Class D21, Subclasses 736, 737, 738, 739, 740, 741, 742, 743, 744, 745, 746 and 759

Class 473, Subclasses 251, 252, 340 and 341

Related applications: Attorney Docket Nos. 015127.00784 and 015127.00785 both filed 10/13/2006

If not previously filed for the above-identified application, the following items required by 37 CFR 1.155 are enclosed:

- Formal drawings (see 37 CFR 1.84).
- The fee set forth in 37 CFR 1.17(k).
- An information disclosure statement in compliance with 37 CFR 1.98.

/Robert S. Katz/	October 13, 2006
Signature	Date
Robert S. Katz	36,402
Typed or printed name	Registration Number, if applicable
202-824-3000	
Telephone Number	

WARNING: Information on this form may become public. Credit card information should not be included on this form. Provide credit card information and authorization on PTO-2038.

This collection of information is required by 37 CFR 1.155. The information is required to obtain or retain a benefit by the public which is to file (and by the USPTO to process) an application. Confidentiality is governed by 35 U.S.C. 122 and 37 CFR 1.11 and 1.14. This collection is estimated to take 6 minutes to complete, including gathering, preparing, and submitting the completed application form to the USPTO. Time will vary depending upon the individual case. Any comments on the amount of time you require to complete this form and/or suggestions for reducing this burden, should be sent to the Chief Information Officer, U.S. Patent and Trademark Office, U.S. Department of Commerce, P.O. Box 1450, Alexandria, VA 22313-1450. DO NOT SEND FEES OR COMPLETED FORMS TO THIS ADDRESS. SEND TO: Commissioner for Patents, P.O. Box 1450, Alexandria, VA 22313-1450.

If you need assistance in completing the form, call 1-800-PTO-9199 and select option 2.

PTO/SB/27 (09-06)
Approved for use through 03/31/2007. OMB 0651-0031
U.S. Patent and Trademark Office; U.S DEPARTMENT OF COMMERCE
Under the Paperwork Reduction ACT of 1995, no persons are required to respond to collection of information unless it displays a valid OMB control number.

REQUEST FOR EXPEDITED EXAMINATION OF A DESIGN APPLICATION (37 CFR 1.155)

Application Number	TBA 29/249,632
Filing Date	October 13, 2006
First Named Inventor	Andrew Oldknow
Title	Portion of a Golf Club Head
Atty Docket Number	015127.00793

ADDRESS TO:
MAIL STOP EXPEDITED DESIGN
COMMISSIONER FOR PATENTS
P.O. Box 1450
Alexandria, VA 22313-1450

Approved 10/25/06
Jacqueline M. Stone
Jacqueline M. Stone, Director
Technology Center 1700/2900

This is a request for expedited examination of a design application under 37 CFR 1.155.

NOTE: If the Request made by this form accompanies original application papers, include form PTO/SB/18 "Design Patent Application Transmittal" or its equivalent.

A preexamination search was conducted. The field of search was:

Class D21, Subclasses 733, 747, 748, 749, 750, 751, 752, 753, 759

Class 473, Subclasses 287, 290, 291, 324, 325, 326, 327, 328, 329, 330, 331, 349, 350

Related applications: Attorney Docket Nos. 015127.00794, 015127.00786, 015127.00787, 015127.00788 and 015127.00790 all filed 10/13/2006

If not previously filed for the above-identified application, the following items required by 37 CFR 1.155 are enclosed:

- Formal drawings (see 37 CFR 1.84).
- The fee set forth in 37 CFR 1.17(k).
- An information disclosure statement in compliance with 37 CFR 1.98.

/Robert S. Katz/	October 13, 2006
Signature	Date
Robert S. Katz	36,402
Typed or printed name	Registration Number, if applicable
202-824-3000	
Telephone Number	

WARNING: Information on this form may become public. Credit card information should not be included on this form. Provide credit card information and authorization on PTO-2038.

This collection of information is required by 37 CFR 1.155. The information is required to obtain or retain a benefit by the public which is to file (and by the USPTO to process) an application. Confidentiality is governed by 35 U.S.C. 122 and 37 CFR 1.11 and 1.14. This collection is estimated to take 6 minutes to complete, including gathering, preparing, and submitting the completed application form to the USPTO. Time will vary depending upon the individual case. Any comments on the amount of time you require to complete this form and/or suggestions for reducing this burden, should be sent to the Chief Information Officer, U.S. Patent and Trademark Office, U.S. Department of Commerce, P.O. Box 1450, Alexandria, VA 22313-1450. DO NOT SEND FEES OR COMPLETED FORMS TO THIS ADDRESS. SEND TO: Commissioner for Patents, P.O. Box 1450, Alexandria, VA 22313-1450.

If you need assistance in completing the form, call 1-800-PTO-9199 and select option 2.

PTO/SB/27 (09-06)
Approved for use through 03/31/2007. OMB 0651-0031
U.S. Patent and Trademark Office; U.S DEPARTMENT OF COMMERCE
Under the Paperwork Reduction ACT of 1995, no persons are required to respond to collection of information unless it displays a valid OMB control number.

REQUEST FOR EXPEDITED EXAMINATION OF A DESIGN APPLICATION (37 CFR 1.155)

Application Number	TBA 29/249,633
Filing Date	October 13, 2006
First Named Inventor	Andrew Oldknow
Title	Portion of a Golf Club Head for a Putter
Atty Docket Number	015127.00784

ADDRESS TO:

MAIL STOP EXPEDITED DESIGN
COMMISSIONER FOR PATENTS
P.O. Box 1450
Alexandria, VA 22313-1450

Approved 10/25/06
Jacqueline M. Stone
Jacqueline M. Stone, Director
Technology Center 1700/2900

This is a request for expedited examination of a design application under 37 CFR 1.155.

NOTE: If the Request made by this form accompanies original application papers, include form PTO/SB/18 "Design Patent Application Transmittal" or its equivalent.

A preexamination search was conducted. The field of search was:

Class D21, Subclasses 736, 737, 738, 739, 740, 741, 742, 743, 744, 745, 746 and 759

Class 473, Subclasses 251, 252, 340 and 341

Related applications: Attorney Docket Nos. 015127.00782 and 015127.00785 both filed 10/13/2006

If not previously filed for the above-identified application, the following items required by 37 CFR 1.155 are enclosed:

- Formal drawings (see 37 CFR 1.84).
- The fee set forth in 37 CFR 1.17(k).
- An information disclosure statement in compliance with 37 CFR 1.98.

/Robert S. Katz/ — Signature

October 13, 2006 — Date

Robert S. Katz — Typed or printed name

36,402 — Registration Number, if applicable

202-824-3000 — Telephone Number

WARNING: Information on this form may become public. Credit card information should not be included on this form. Provide credit card information and authorization on PTO-2038.

This collection of information is required by 37 CFR 1.155. The information is required to obtain or retain a benefit by the public which is to file (and by the USPTO to process) an application. Confidentiality is governed by 35 U.S.C. 122 and 37 CFR 1.11 and 1.14. This collection is estimated to take 6 minutes to complete, including gathering, preparing, and submitting the completed application form to the USPTO. Time will vary depending upon the individual case. Any comments on the amount of time you require to complete this form and/or suggestions for reducing this burden, should be sent to the Chief Information Officer, U.S. Patent and Trademark Office, U.S. Department of Commerce, P.O. Box 1450, Alexandria, VA 22313-1450. DO NOT SEND FEES OR COMPLETED FORMS TO THIS ADDRESS. SEND TO: Commissioner for Patents, P.O. Box 1450, Alexandria, VA 22313-1450.

If you need assistance in completing the form, call 1-800-PTO-9199 and select option 2.

PTO/SB/27 (09-06)
Approved for use through 03/31/2007. OMB 0651-0031
U.S. Patent and Trademark Office; U.S DEPARTMENT OF COMMERCE
Under the Paperwork Reduction ACT of 1995, no persons are required to respond to collection of information unless it displays a valid OMB control number.

REQUEST FOR EXPEDITED EXAMINATION OF A DESIGN APPLICATION (37 CFR 1.155)

Application Number	TBA 29/249,634
Filing Date	October 13, 2006
First Named Inventor	Andrew Oldknow
Title	Portion of a Golf Club Head
Atty Docket Number	015127.00794

ADDRESS TO:

MAIL STOP EXPEDITED DESIGN
COMMISSIONER FOR PATENTS
P.O. Box 1450
Alexandria, VA 22313-1450

Approved
Jacqueline M. Stone 10/25/06
Jacqueline M. Stone, Director
Technology Center 1700/2900

This is a request for expedited examination of a design application under 37 CFR 1.155.

NOTE: If the Request made by this form accompanies original application papers, include form PTO/SB/18 "Design Patent Application Transmittal" or its equivalent.

A preexamination search was conducted. The field of search was:

Class D21, Subclasses 733, 747, 748, 749, 750, 751, 752, 753, 759

Class 473, Subclasses 287, 290, 291, 324, 325, 326, 327, 328, 329, 330, 331, 349, 350

Related applications: Attorney Docket Nos. 015127.00793, 015127.00786, 015127.00787, 015127.00788 and 015127.00790 all filed 10/13/2006

If not previously filed for the above-identified application, the following items required by 37 CFR 1.155 are enclosed:

- Formal drawings (see 37 CFR 1.84).
- The fee set forth in 37 CFR 1.17(k).
- An information disclosure statement in compliance with 37 CFR 1.98.

/Robert S. Katz/	October 13, 2006
Signature	Date
Robert S. Katz	36,402
Typed or printed name	Registration Number, if applicable
202-824-3000	
Telephone Number	

WARNING: Information on this form may become public. Credit card information should not be included on this form. Provide credit card information and authorization on PTO-2038.

This collection of information is required by 37 CFR 1.155. The information is required to obtain or retain a benefit by the public which is to file (and by the USPTO to process) an application. Confidentiality is governed by 35 U.S.C. 122 and 37 CFR 1.11 and 1.14. This collection is estimated to take 6 minutes to complete, including gathering, preparing, and submitting the completed application form to the USPTO. Time will vary depending upon the individual case. Any comments on the amount of time you require to complete this form and/or suggestions for reducing this burden, should be sent to the Chief Information Officer, U.S. Patent and Trademark Office, U.S. Department of Commerce, P.O. Box 1450, Alexandria, VA 22313-1450. DO NOT SEND FEES OR COMPLETED FORMS TO THIS ADDRESS. SEND TO: Commissioner for Patents, P.O. Box 1450, Alexandria, VA 22313-1450.

If you need assistance in completing the form, call 1-800-PTO-9199 and select option 2.

PTO/SB/27 (09-06)
Approved for use through 03/31/2007. OMB 0651-0031
U.S. Patent and Trademark Office; U.S DEPARTMENT OF COMMERCE
Under the Paperwork Reduction ACT of 1995, no persons are required to respond to collection of information unless it displays a valid OMB control number.

REQUEST FOR EXPEDITED EXAMINATION OF A DESIGN APPLICATION (37 CFR 1.155)

Application Number	TBA 29/249,635
Filing Date	October 13, 2006
First Named Inventor	Andrew Oldknow
Title	Portion of a Golf Club Head for a Putter
Atty Docket Number	015127.00785

ADDRESS TO:

MAIL STOP EXPEDITED DESIGN
COMMISSIONER FOR PATENTS
P.O. Box 1450
Alexandria, VA 22313-1450

Approved 10/25/06
Jacqueline M. Stone
Jacqueline M. Stone, Director
Technology Center 1700/2900

This is a request for expedited examination of a design application under 37 CFR 1.155.

NOTE: If the Request made by this form accompanies original application papers, include form PTO/SB/18 "Design Patent Application Transmittal" or its equivalent.

A preexamination search was conducted. The field of search was:

Class D21, Subclasses 736, 737, 738, 739, 740, 741, 742, 743, 744, 745, 746 and 759

Class 473, Subclasses 251, 252, 340 and 341

Related applications: Attorney Docket Nos. 015127.00782 and 015127.00784 both filed 10/13/2006

If not previously filed for the above-identified application, the following items required by 37 CFR 1.155 are enclosed:

- Formal drawings (see 37 CFR 1.84).
- The fee set forth in 37 CFR 1.17(k).
- An information disclosure statement in compliance with 37 CFR 1.98.

/Robert S. Katz/	October 13, 2006
Signature	Date
Robert S. Katz	36,402
Typed or printed name	Registration Number, if applicable
202-824-3000	
Telephone Number	

WARNING: Information on this form may become public. Credit card information should not be included on this form. Provide credit card information and authorization on PTO-2038.

This collection of information is required by 37 CFR 1.155. The information is required to obtain or retain a benefit by the public which is to file (and by the USPTO to process) an application. Confidentiality is governed by 35 U.S.C. 122 and 37 CFR 1.11 and 1.14. This collection is estimated to take 6 minutes to complete, including gathering, preparing, and submitting the completed application form to the USPTO. Time will vary depending upon the individual case. Any comments on the amount of time you require to complete this form and/or suggestions for reducing this burden, should be sent to the Chief Information Officer, U.S. Patent and Trademark Office, U.S. Department of Commerce, P.O. Box 1450, Alexandria, VA 22313-1450. DO NOT SEND FEES OR COMPLETED FORMS TO THIS ADDRESS. SEND TO: Commissioner for Patents, P.O. Box 1450, Alexandria, VA 22313-1450.

If you need assistance in completing the form, call 1-800-PTO-9199 and select option 2.

PTO/SB/27 (09-06)
Approved for use through 03/31/2007. OMB 0651-0031
U.S. Patent and Trademark Office; U.S DEPARTMENT OF COMMERCE
Under the Paperwork Reduction ACT of 1995, no persons are required to respond to collection of information unless it displays a valid OMB control number.

REQUEST FOR EXPEDITED EXAMINATION OF A DESIGN APPLICATION (37 CFR 1.155)

Application Number	TBA 29/249,647
Filing Date	October 16, 2006
First Named Inventor	Andrew Oldknow
Title	Portion of a Golf Club Head
Atty Docket Number	015127.00789

ADDRESS TO:
MAIL STOP EXPEDITED DESIGN
COMMISSIONER FOR PATENTS
P.O. Box 1450
Alexandria, VA 22313-1450

This is a request for expedited examination of a design application under 37 CFR 1.155.

NOTE: If the Request made by this form accompanies original application papers, include form PTO/SB/18 "Design Patent Application Transmittal" or its equivalent.

A preexamination search was conducted. The field of search was:

Class D21, Subclasses 733, 747, 748, 749, 750, 751, 752, 753, 759

Class 473, Subclasses 287, 290, 291, 324, 325, 326, 327, 328, 329, 330, 331, 349, 350

Related applications: Attorney Docket Nos. 015127.00796, 015127.00810 and 015127.00811 all filed 10/16/2006

If not previously filed for the above-identified application, the following items required by 37 CFR 1.155 are enclosed:

- Formal drawings (see 37 CFR 1.84).
- The fee set forth in 37 CFR 1.17(k).
- An information disclosure statement in compliance with 37 CFR 1.98.

Approved 10/23/06
Jacqueline M. Stone
Jacqueline M. Stone, Director
Technology Center 1700/2900

/Robert S. Katz/ — Signature

October 16, 2006 — Date

Robert S. Katz — Typed or printed name

36,402 — Registration Number, if applicable

202-824-3000 — Telephone Number

WARNING: Information on this form may become public. Credit card information should not be included on this form. Provide credit card information and authorization on PTO-2038.

This collection of information is required by 37 CFR 1.155. The information is required to obtain or retain a benefit by the public which is to file (and by the USPTO to process) an application. Confidentiality is governed by 35 U.S.C. 122 and 37 CFR 1.11 and 1.14. This collection is estimated to take 6 minutes to complete, including gathering, preparing, and submitting the completed application form to the USPTO. Time will vary depending upon the individual case. Any comments on the amount of time you require to complete this form and/or suggestions for reducing this burden, should be sent to the Chief Information Officer, U.S. Patent and Trademark Office, U.S. Department of Commerce, P.O. Box 1450, Alexandria, VA 22313-1450. DO NOT SEND FEES OR COMPLETED FORMS TO THIS ADDRESS. SEND TO: Commissioner for Patents, P.O. Box 1450, Alexandria, VA 22313-1450.

If you need assistance in completing the form, call 1-800-PTO-9199 and select option 2.

PTO/SB/27 (09-06)
Approved for use through 03/31/2007. OMB 0651-0031
U.S. Patent and Trademark Office; U.S DEPARTMENT OF COMMERCE
Under the Paperwork Reduction ACT of 1995, no persons are required to respond to collection of information unless it displays a valid OMB control number.

REQUEST FOR EXPEDITED EXAMINATION OF A DESIGN APPLICATION (37 CFR 1.155)

Application Number	TBA 29/249,649
Filing Date	October 16, 2006
First Named Inventor	Andrew Oldknow
Title	Portion of a Golf Club Head
Atty Docket Number	015127.00796

ADDRESS TO:
MAIL STOP EXPEDITED DESIGN
COMMISSIONER FOR PATENTS
P.O. Box 1450
Alexandria, VA 22313-1450

Approved 10-23-06
Jacqueline M. Stone
Jacqueline M. Stone, Director
Technology Center 1700/2900

This is a request for expedited examination of a design application under 37 CFR 1.155.

NOTE: If the Request made by this form accompanies original application papers, include form PTO/SB/18 "Design Patent Application Transmittal" or its equivalent.

A preexamination search was conducted. The field of search was:

Class D21, Subclasses 733, 747, 748, 749, 750, 751, 752, 753, 759

Class 473, Subclasses 287, 290, 291, 324, 325, 326, 327, 328, 329, 330, 331, 349, 350

Related applications: Attorney Docket Nos. 015127.00789, 015127.00810 and 015127.00811 all filed 10/16/06

If not previously filed for the above-identified application, the following items required by 37 CFR 1.155 are enclosed:

- Formal drawings (see 37 CFR 1.84).
- The fee set forth in 37 CFR 1.17(k).
- An information disclosure statement in compliance with 37 CFR 1.98.

/Robert S. Katz/	October 16, 2006
Signature	Date
Robert S. Katz	36,402
Typed or printed name	Registration Number, if applicable
202-824-3000	
Telephone Number	

WARNING: Information on this form may become public. Credit card information should not be included on this form. Provide credit card information and authorization on PTO-2038.

This collection of information is required by 37 CFR 1.155. The information is required to obtain or retain a benefit by the public which is to file (and by the USPTO to process) an application. Confidentiality is governed by 35 U.S.C. 122 and 37 CFR 1.11 and 1.14. This collection is estimated to take 6 minutes to complete, including gathering, preparing, and submitting the completed application form to the USPTO. Time will vary depending upon the individual case. Any comments on the amount of time you require to complete this form and/or suggestions for reducing this burden, should be sent to the Chief Information Officer, U.S. Patent and Trademark Office, U.S. Department of Commerce, P.O. Box 1450, Alexandria, VA 22313-1450. DO NOT SEND FEES OR COMPLETED FORMS TO THIS ADDRESS. SEND TO: Commissioner for Patents, P.O. Box 1450, Alexandria, VA 22313-1450.

If you need assistance in completing the form, call 1-800-PTO-9199 and select option 2.

PTO/SB/27 (09-06)
Approved for use through 03/31/2007. OMB 0651-0031
U.S. Patent and Trademark Office; U.S DEPARTMENT OF COMMERCE
Under the Paperwork Reduction ACT of 1995, no persons are required to respond to collection of information unless it displays a valid OMB control number.

REQUEST FOR EXPEDITED EXAMINATION OF A DESIGN APPLICATION (37 CFR 1.155)

Application Number	TBA 29/249,651
Filing Date	October 16, 2006
First Named Inventor	Andrew Oldknow
Title	Portion of a Golf Club Head
Atty Docket Number	015127.00810

ADDRESS TO:
MAIL STOP EXPEDITED DESIGN
COMMISSIONER FOR PATENTS
P.O. Box 1450
Alexandria, VA 22313-1450

Approved
Jacqueline M. Stone
Jacqueline M. Stone, Director
Technology Center 1700/2900
10/23/06

This is a request for expedited examination of a design application under 37 CFR 1.155.

NOTE: If the Request made by this form accompanies original application papers, include form PTO/SB/18 "Design Patent Application Transmittal" or its equivalent.

A preexamination search was conducted. The field of search was:

Class D21, Subclasses 733, 747, 748, 749, 750, 751, 752, 753, 759

Class 473, Subclasses 287, 290, 291, 324, 325, 326, 327, 328, 329, 330, 331, 349, 350

Related applications: Attorney Docket Nos. 015127.00796, 015127.00789 and 015127.00811 all filed 10/16/06

If not previously filed for the above-identified application, the following items required by 37 CFR 1.155 are enclosed:

- Formal drawings (see 37 CFR 1.84).
- The fee set forth in 37 CFR 1.17(k).
- An information disclosure statement in compliance with 37 CFR 1.98.

/Robert S. Katz/	October 16, 2006
Signature	Date
Robert S. Katz	36,402
Typed or printed name	Registration Number, if applicable
202-824-3000	
Telephone Number	

WARNING: Information on this form may become public. Credit card information should not be included on this form. Provide credit card information and authorization on PTO-2038.

This collection of information is required by 37 CFR 1.155. The information is required to obtain or retain a benefit by the public which is to file (and by the USPTO to process) an application. Confidentiality is governed by 35 U.S.C. 122 and 37 CFR 1.11 and 1.14. This collection is estimated to take 6 minutes to complete, including gathering, preparing, and submitting the completed application form to the USPTO. Time will vary depending upon the individual case. Any comments on the amount of time you require to complete this form and/or suggestions for reducing this burden, should be sent to the Chief Information Officer, U.S. Patent and Trademark Office, U.S. Department of Commerce, P.O. Box 1450, Alexandria, VA 22313-1450. DO NOT SEND FEES OR COMPLETED FORMS TO THIS ADDRESS. SEND TO: Commissioner for Patents, P.O. Box 1450, Alexandria, VA 22313-1450.

If you need assistance in completing the form, call 1-800-PTO-9199 and select option 2.

PTO/SB/27 (09-06)
Approved for use through 03/31/2007. OMB 0651-0031
U.S. Patent and Trademark Office; U.S DEPARTMENT OF COMMERCE
Under the Paperwork Reduction ACT of 1995, no persons are required to respond to collection of information unless it displays a valid OMB control number.

REQUEST FOR EXPEDITED EXAMINATION OF A DESIGN APPLICATION (37 CFR 1.155)

Application Number	TBA 29/249,652
Filing Date	October 16, 2006
First Named Inventor	Andrew Oldknow
Title	Portion of a Golf Club Head
Atty Docket Number	015127.00811

ADDRESS TO:

MAIL STOP EXPEDITED DESIGN
COMMISSIONER FOR PATENTS
P.O. Box 1450
Alexandria, VA 22313-1450

Approved
Jacqueline M. Stone
Jacqueline M. Stone, Director
Technology Center 1700/2900
10/23/06

This is a request for expedited examination of a design application under 37 CFR 1.155.

NOTE: If the Request made by this form accompanies original application papers, include form PTO/SB/18 "Design Patent Application Transmittal" or its equivalent.

A preexamination search was conducted. The field of search was:

Class D21, Subclasses 733, 747, 748, 749, 750, 751, 752, 753, 759

Class 473, Subclasses 287, 290, 291, 324, 325, 326, 327, 328, 329, 330, 331, 349, 350

Related applications: Attorney Docket Nos. 015127.00796, 015127.00789 and 015127.00810 all filed 10/16/06

If not previously filed for the above-identified application, the following items required by 37 CFR 1.155 are enclosed:

- Formal drawings (see 37 CFR 1.84).
- The fee set forth in 37 CFR 1.17(k).
- An information disclosure statement in compliance with 37 CFR 1.98.

/Robert S. Katz/	October 16, 2006
Signature	Date
Robert S. Katz	36,402
Typed or printed name	Registration Number, if applicable
202-824-3000	
Telephone Number	

WARNING: Information on this form may become public. Credit card information should not be included on this form. Provide credit card information and authorization on PTO-2038.

This collection of information is required by 37 CFR 1.155. The information is required to obtain or retain a benefit by the public which is to file (and by the USPTO to process) an application. Confidentiality is governed by 35 U.S.C. 122 and 37 CFR 1.11 and 1.14. This collection is estimated to take 6 minutes to complete, including gathering, preparing, and submitting the completed application form to the USPTO. Time will vary depending upon the individual case. Any comments on the amount of time you require to complete this form and/or suggestions for reducing this burden, should be sent to the Chief Information Officer, U.S. Patent and Trademark Office, U.S. Department of Commerce, P.O. Box 1450, Alexandria, VA 22313-1450. DO NOT SEND FEES OR COMPLETED FORMS TO THIS ADDRESS. SEND TO: Commissioner for Patents, P.O. Box 1450, Alexandria, VA 22313-1450.

If you need assistance in completing the form, call 1-800-PTO-9199 and select option 2.

PTO/SB/27 (09-06)
Approved for use through 03/31/2007. OMB 0651-0031
U.S. Patent and Trademark Office; U.S DEPARTMENT OF COMMERCE
Under the Paperwork Reduction ACT of 1995, no persons are required to respond to collection of information unless it displays a valid OMB control number.

REQUEST FOR EXPEDITED EXAMINATION OF A DESIGN APPLICATION (37 CFR 1.155)

Application Number	TBA 29/249,656
Filing Date	October 16, 2006
First Named Inventor	Andrew Oldknow
Title	Portion of a Golf Club Head
Atty Docket Number	015127.00812

ADDRESS TO:
MAIL STOP EXPEDITED DESIGN
COMMISSIONER FOR PATENTS
P.O. Box 1450
Alexandria, VA 22313-1450

Approved
Jacqueline M. Stone
Jacqueline M. Stone, Director
Technology Center 1700/2900
10/23/06

This is a request for expedited examination of a design application under 37 CFR 1.155.

NOTE: If the Request made by this form accompanies original application papers, include form PTO/SB/18 "Design Patent Application Transmittal" or its equivalent.

A preexamination search was conducted. The field of search was:

Class D21, Subclasses 733, 747, 748, 749, 750, 751, 752, 753, 759

Class 473, Subclasses 287, 290, 291, 324, 325, 326, 327, 328, 329, 330, 331, 349, 350

Related applications: Attorney Docket No. 015127.00813 filed 10/16/2006

If not previously filed for the above-identified application, the following items required by 37 CFR 1.155 are enclosed:

- Formal drawings (see 37 CFR 1.84).
- The fee set forth in 37 CFR 1.17(k).
- An information disclosure statement in compliance with 37 CFR 1.98.

/Robert S. Katz/	October 16, 2006
Signature	Date
Robert S. Katz	36,402
Typed or printed name	Registration Number, if applicable
202-824-3000	
Telephone Number	

WARNING: Information on this form may become public. Credit card information should not be included on this form. Provide credit card information and authorization on PTO-2038.

This collection of information is required by 37 CFR 1.155. The information is required to obtain or retain a benefit by the public which is to file (and by the USPTO to process) an application. Confidentiality is governed by 35 U.S.C. 122 and 37 CFR 1.11 and 1.14. This collection is estimated to take 6 minutes to complete, including gathering, preparing, and submitting the completed application form to the USPTO. Time will vary depending upon the individual case. Any comments on the amount of time you require to complete this form and/or suggestions for reducing this burden, should be sent to the Chief Information Officer, U.S. Patent and Trademark Office, U.S. Department of Commerce, P.O. Box 1450, Alexandria, VA 22313-1450. DO NOT SEND FEES OR COMPLETED FORMS TO THIS ADDRESS. SEND TO: Commissioner for Patents, P.O. Box 1450, Alexandria, VA 22313-1450.

If you need assistance in completing the form, call 1-800-PTO-9199 and select option 2.

PTO/SB/27 (09-06)
Approved for use through 03/31/2007. OMB 0651-0031
U.S. Patent and Trademark Office; U.S DEPARTMENT OF COMMERCE
Under the Paperwork Reduction ACT of 1995, no persons are required to respond to collection of information unless it displays a valid OMB control number.

REQUEST FOR EXPEDITED EXAMINATION OF A DESIGN APPLICATION (37 CFR 1.155)

Application Number	TBA 29/249,657
Filing Date	October 16, 2006
First Named Inventor	Andrew Oldknow
Title	Portion of a Golf Club Head
Atty Docket Number	015127.00813

ADDRESS TO:
MAIL STOP EXPEDITED DESIGN
COMMISSIONER FOR PATENTS
P.O. Box 1450
Alexandria, VA 22313-1450

Approved 10/23/06
Jacqueline M. Stone
Jacqueline M. Stone, Director
Technology Center 1700/2900

This is a request for expedited examination of a design application under 37 CFR 1.155.

NOTE: If the Request made by this form accompanies original application papers, include form PTO/SB/18 "Design Patent Application Transmittal" or its equivalent.

A preexamination search was conducted. The field of search was:

Class D21, Subclasses 733, 747, 748, 749, 750, 751, 752, 753, 759

Class 473, Subclasses 287, 290, 291, 324, 325, 326, 327, 328, 329, 330, 331, 349, 350

Related applications: Attorney Docket No. 015127.00812 filed 10/16/2006

If not previously filed for the above-identified application, the following items required by 37 CFR 1.155 are enclosed:

- Formal drawings (see 37 CFR 1.84).
- The fee set forth in 37 CFR 1.17(k).
- An information disclosure statement in compliance with 37 CFR 1.98.

/Robert S. Katz/	October 16, 2006
Signature	Date
Robert S. Katz	36,402
Typed or printed name	Registration Number, if applicable
202-824-3000	
Telephone Number	

WARNING: Information on this form may become public. Credit card information should not be included on this form. Provide credit card information and authorization on PTO-2038.

This collection of information is required by 37 CFR 1.155. The information is required to obtain or retain a benefit by the public which is to file (and by the USPTO to process) an application. Confidentiality is governed by 35 U.S.C. 122 and 37 CFR 1.11 and 1.14. This collection is estimated to take 6 minutes to complete, including gathering, preparing, and submitting the completed application form to the USPTO. Time will vary depending upon the individual case. Any comments on the amount of time you require to complete this form and/or suggestions for reducing this burden, should be sent to the Chief Information Officer, U.S. Patent and Trademark Office, U.S. Department of Commerce, P.O. Box 1450, Alexandria, VA 22313-1450. DO NOT SEND FEES OR COMPLETED FORMS TO THIS ADDRESS. SEND TO: Commissioner for Patents, P.O. Box 1450, Alexandria, VA 22313-1450.

If you need assistance in completing the form, call 1-800-PTO-9199 and select option 2.

UNITED STATES PATENT AND TRADEMARK OFFICE

Commissioner for Patents
United States Patent and Trademark Office
P.O. Box 1450
Alexandria, VA 22313-1450
www.uspto.gov

Carl D. Crowell
P.O. Box 923
Salem, OR 97308-0923

COPY MAILED

OCT 21 2008

OFFICE OF PETITIONS

In re Application of :
James Normandy :
Application No. 29/249,686 : DECISION ON PETITION
Filed: October 17, 2006 :
Attorney Docket No. NORM-06 :

This is a decision on the petition under the unintentional provisions of 37 CFR 1.137(b), filed September 17, 2008, to revive the above-identified application.

The petition is **DISMISSED**.

Any request for reconsideration of this decision must be submitted within TWO (2) MONTHS from the mail date of this decision. Extensions of time under 37 CFR 1.136(a) are permitted. The reconsideration request should include a cover letter entitled "Renewed Petition under 37 CFR 1.137(b)." This is **not** a final agency action within the meaning of 5 U.S.C. § 704.

This application became abandoned for failure to timely submit replacement drawings on or before August 15, 2008, as required by the Notice of Allowability, mailed May 15, 2008. Accordingly, the date of abandonment of this application is August 16, 2008.

A grantable petition under 37 CFR 1.137(b) must be accompanied by: (1) the required reply, unless previously filed; (2) the petition fee as set forth in 37 CFR 1.17(m); (3) a statement that the entire delay in filing the required reply from the due date for the reply until the filing of a grantable petition pursuant to 37 CFR 1.137(b) was unintentional; and (4) any terminal disclaimer (and fee as set forth in 37 CFR 1.20(d)) required by 37 CFR 1.137(d). Where there is a question as to whether either the abandonment or the delay in filing a petition under 37 CFR 1.137 was unintentional, the Director may require additional information. See MPEP 711.03(c)(II)(C) and (D). The instant petition lacks item 4.

A Terminal Disclaimer and $65 fee is required under 37 CFR 1.137(d) if the application is: (1) a design application, (2) a utility application filed before June 8, 1995, or (3) a plant application filed before June 8, 1995. The Terminal Disclaimer must dedicate to the public a terminal part of the of the term of any patent granted the application equivalent to the period of abandonment of the application, and must also apply to any patent granted on any application containing a specific reference under 35 U.S.C. 120, 121 or 365(c) to the application from which revival is sought.

Further correspondence with respect to this matter should be addressed as follows:

By Mail: Mail Stop PETITION
Commissioner for Patents
P. O. Box 1450
Alexandria, VA 22313-1450

By hand: U. S. Patent and Trademark Office
Customer Service Window, Mail Stop Petitions
Randolph Building
401 Dulany Street
Alexandria, VA 22314

The centralized facsimile number is **(571) 273-8300.**

Telephone inquiries concerning this decision should be directed to Denise Williams at (571) 272-8930.

Brian Brown
Petitions Examiner
Office of Petitions

UNITED STATES PATENT AND TRADEMARK OFFICE

Commissioner for Patents
United States Patent and Trademark Office
P.O. Box 1450
Alexandria, VA 22313-1450
www.uspto.gov

Carl D. Crowell
P.O. Box 923
Salem, OR 97308-0923

COPY MAILED
JAN 06 2009

OFFICE OF PETITIONS

In re Application of
James Normandy
Application No. 29/249,686
Filed: October 17, 2006
Attorney Docket No. NORM-06

DECISION ON PETITION

This is a decision on the renewed petition under the unintentional provisions of 37 CFR 1.137(b), filed October 30, 2008, to revive the above-identified application.

The renewed petition is **DISMISSED**.

Any request for reconsideration of this decision must be submitted within TWO (2) MONTHS from the mail date of this decision. Extensions of time under 37 CFR 1.136(a) are permitted. The reconsideration request should include a cover letter entitled "Renewed Petition under 37 CFR 1.137(b)." This is **not** a final agency action within the meaning of 5 U.S.C. § 704.

This application became abandoned for failure to timely submit replacement drawings on or before August 15, 2008, as required by the Notice of Allowability, mailed May 15, 2008. Accordingly, the date of abandonment of this application is August 16, 2008.

A grantable petition under 37 CFR 1.137(b) must be accompanied by: (1) the required reply, unless previously filed; (2) the petition fee as set forth in 37 CFR 1.17(m); (3) a statement that the entire delay in filing the required reply from the due date for the reply until the filing of a grantable petition pursuant to 37 CFR 1.137(b) was unintentional; and (4) any terminal disclaimer (and fee as set forth in 37 CFR 1.20(d)) required by 37 CFR 1.137(d). Where there is a question as to whether either the abandonment or the delay in filing a petition under 37 CFR 1.137 was unintentional, the Director may require additional information. See MPEP 711.03(c)(II)(C) and (D). The instant petition lacks item 4.

The Terminal Disclaimer must dedicate to the public a terminal part of the of the term of any patent granted the application equivalent to the period of abandonment of the application, and must also apply to any patent granted on any application containing a specific reference under 35 U.S.C. 120, 121 or 365(c) to the application from which revival is sought. The Terminal Disclaimer filed October 30, 2008 is defective because it does not identify the name of the owner, which in the present situation appears to be James Normandy, the inventor. Lacking an acceptable Terminal Disclaimer, the renewed petition must be dismissed.

Further correspondence with respect to this matter should be addressed as follows:

By Mail:
Mail Stop PETITION
Commissioner for Patents
P. O. Box 1450
Alexandria, VA 22313-1450

By hand:
U. S. Patent and Trademark Office
Customer Service Window, Mail Stop Petitions
Randolph Building
401 Dulany Street
Alexandria, VA 22314

The centralized facsimile number is **(571) 273-8300.**

Telephone inquiries concerning this decision should be directed to Denise Williams at (571) 272-8930.

Brian Brown
Petitions Examiner
Office of Petitions

UNITED STATES PATENT AND TRADEMARK OFFICE

Commissioner for Patents
United States Patent and Trademark Office
P.O. Box 1450
Alexandria, VA 22313-1450
www.uspto.gov

COPY MAILED

JAN 27 2009

OFFICE OF PETITIONS

LAW OFFICE OF CARL. D. CROWELL
P. O. BOX 923
SALEM OR 97308-0923

In re Application of :
James Normandy :
Application No. 29/249,686 : DECISION ON PETITION
Filed: October 17, 2006 :
Attorney Docket No. NORM-06 :

This is a decision on the renewed petition under the unintentional provisions of 37 CFR 1.137(b), filed January 12, 2009, to revive the above-identified application.

The renewed petition is **GRANTED**.

The petition satisfies the requirements of 37 CFR 1.137(b) in that petitioner has supplied (1) the reply in the form 2 sheets of replacement drawings (Fig. 3), (2) the petition fee of $810, (3) a proper statement of unintentional delay (4) any terminal disclaimer and fee as set forth in 37 CFR 1.20(d) required by 37 CFR 1.137(d).

Telephone inquiries concerning this decision should be directed to Denise Williams at (571) 272-8930.

This application is being referred to the Office of Data Management for processing into a patent.

Brian W. Brown
Petitions Examiner
Office of Petitions

UNITED STATES PATENT AND TRADEMARK OFFICE

Commissioner for Patents
United States Patent and Trademark Office
P.O. Box 1450
Alexandria, VA 22313-1450
www.uspto.gov

BROOKS KUSHMAN P.C.
1000 TOWN CENTER
TWENTY-SECOND FLOOR
SOUTHFIELD MI 48075

COPY MAILED

JUN 30 2008

OFFICE OF PETITIONS

In re Application of :
Michael Edward Fonk, et al. :
Application No. 29/249,692 : ON PETITION
Filed: October 18, 2006 :
Attorney Docket No. ENAS0103DUS :

This is a decision on the petition under the unintentional provisions of 37 CFR 1.137(b) filed October 22, 2007, to revive the above-identified application.

The petition is **DISMISSED**.

Any request for reconsideration of this decision must be submitted within TWO (2) MONTHS from the mail date of this decision. Extensions of time under 37 CFR 1.136(a) are permitted. The reconsideration request should include a cover letter entitled "Renewed Petition under 37 CFR 1.137(b)." This is **not** a final agency action within the meaning of 5 U.S.C. § 704.

The application became abandoned for failure to submit formal drawings in a timely manner in reply to the Notice of Allowability, mailed May 7, 2007, which set a period for reply of three (3) months. Accordingly, this application became abandoned on August 8, 2007. The Notice of Abandonment was mailed August 30, 2007.

A grantable petition under 37 CFR 1.137(b) must be accompanied by: (1) the required reply, unless previously filed; (2) the petition fee as set forth in 37 CFR 1.17(m); (3) a statement that the entire delay in filing the required reply from the due date for the reply until the filing of a grantable petition pursuant to 37 CFR 1.137(b) was unintentional; and (4) any terminal disclaimer (and fee as set forth in 37 CFR 1.20(d)) required by 37 CFR 1.137(d). Where there is a question as to whether either the abandonment or the delay in filing a petition under 37 CFR 1.137 was unintentional, the Director may require additional information. See MPEP 711.03(c)(II)(C) and (D). The instant petition lacks item(s) (4).

All design application petitions must be accompanied with a terminal disclaimer (and fee as set forth in 37 CFR 1.20(d)) as required by 37 CFR 1.137(d). A copy of the terminal disclaimer form PTO/SB/63 is enclosed for your convenience.

The petition fee as set forth in 37 CFR 1.17(m) is $770 in which you paid $750. To complete payment of the petition fee, $20 will be charged to your deposit account.

37 CFR 1.137(b)(3) requires a statement that "the entire delay in filing the required reply from the due date for the reply until the filing of a grantable petition pursuant to 37 CFR 1.137(b) was unintentional." Since the statement appearing in the petition varies from the language required by 37 CFR 1.137(b)(3), the statement is being construed as the required statement. Petitioner must notify the Office if this is not a correct reading of the statement appearing in the petition.

Further correspondence with respect to this matter should be addressed as follows:

By Mail: Mail Stop PETITION

Commissioner for Patents
P. O. Box 1450
Alexandria, VA 22313-1450

By hand: U. S. Patent and Trademark Office
Customer Service Window, Mail Stop Petitions
Randolph Building
401 Dulany Street
Alexandria, VA 22314

The centralized facsimile number is **(571) 273-8300.**

Telephone inquiries concerning this decision should be directed to Terri Williams at (571) 272-2991.

Chris Bottorff
Petitions Examiner
Office of Petitions

Enclosed: Terminal Disclaimer to Accompany Petition (PTO/SB/63)

PTO/SB/63 (01-08)
Approved for use through 06/30/2008. OMB 0651-0031
U.S. Patent and Trademark Office; U.S. DEPARTMENT OF COMMERCE
Under the Paperwork Reduction Act of 1995, no persons are required to a collection of information unless it displays a valid OMB control number.

TERMINAL DISCLAIMER TO ACCOMPANY PETITION	Docket Number (Optional)

In re Application of:

Name:

Application Number:

Filed:

For:

The owner*, _____ of _____ percent interest in the above-identified application hereby disclaims a terminal part of the term of any patent granted the above-identified application equivalent to: (1) if the above-identified application is a design application, the period of abandonment of the above-identified application, and (2) if the above-identified application is a utility or plant application, the lesser of: (a) the period of abandonment of the application; or (b) the period extending beyond twenty years from the date on which the above-identified application was filed in the United States or, if the application contains a specific reference to an earlier filed application(s) under 35 U.S.C. 120, 121, or 365(c), from the date on which the earliest such application was filed. This disclaimer also applies to any patent granted on a utility or plant application filed before June 8, 1995, or a design application, that contains a specific reference under 35 U.S.C. 120, 121, or 365(c) to the above-identified application. This disclaimer is binding upon the grantee, and its successors or assigns.

Check either box 1 or 2 below, if appropriate.

1. ☐ For submissions on behalf of an organization (e.g., corporation, partnership, university, government agency, etc.), the undersigned is empowered to act on behalf of the organization.

2. ☐ The undersigned is an attorney or agent of record. Registration Number_____.

_____ _____
Signature Date

_____ _____
Typed or Printed Name Telephone Number

☐ Terminal disclaimer fee under 37 CFR 1.20(d) included.

WARNING: Information on this form may become public. Credit card information should not be included on this form. Provide credit card information and authorization on PTO-2038.

* Statement under 37 CFR 3.73(b) is required if terminal disclaimer is signed by the assignee (owner). Form PTO/SB/96 may be used for making this certification. See MPEP § 324.

This collection of information is required by 37 CFR 1.137. The information is required to obtain or retain a benefit by the public which is to file (and by the USPTO to process) an application. Confidentiality is governed by 35 U.S.C. 122 and 37 CFR 1.11 and 1.14. This collection is estimated to take 12 minutes to complete, including gathering, preparing, and submitting the completed application form to the USPTO. Time will vary depending upon the individual case. Any comments on the amount of time you require to complete this form and/or suggestions for reducing this burden, should be sent to the Chief Information Officer, U.S. Patent and Trademark Office, U.S. Department of Commerce, P.O. Box 1450, Alexandria, VA 22313-1450. DO NOT SEND FEES OR COMPLETED FORMS TO THIS ADDRESS. **SEND TO: Commissioner for Patents, P.O. Box 1450, Alexandria, VA 22313-1450.**

If you need assistance in completing the form, call 1-800-PTO-9199 and select option 2.

Privacy Act Statement

The **Privacy Act of 1974 (P.L. 93-579)** requires that you be given certain information in connection with your submission of the attached form related to a patent application or patent. Accordingly, pursuant to the requirements of the Act, please be advised that: (1) the general authority for the collection of this information is 35 U.S.C. 2(b)(2); (2) furnishing of the information solicited is voluntary; and (3) the principal purpose for which the information is used by the U.S. Patent and Trademark Office is to process and/or examine your submission related to a patent application or patent. If you do not furnish the requested information, the U.S. Patent and Trademark Office may not be able to process and/or examine your submission, which may result in termination of proceedings or abandonment of the application or expiration of the patent.

The information provided by you in this form will be subject to the following routine uses:

1. The information on this form will be treated confidentially to the extent allowed under the Freedom of Information Act (5 U.S.C. 552) and the Privacy Act (5 U.S.C 552a). Records from this system of records may be disclosed to the Department of Justice to determine whether disclosure of these records is required by the Freedom of Information Act.
2. A record from this system of records may be disclosed, as a routine use, in the course of presenting evidence to a court, magistrate, or administrative tribunal, including disclosures to opposing counsel in the course of settlement negotiations.
3. A record in this system of records may be disclosed, as a routine use, to a Member of Congress submitting a request involving an individual, to whom the record pertains, when the individual has requested assistance from the Member with respect to the subject matter of the record.
4. A record in this system of records may be disclosed, as a routine use, to a contractor of the Agency having need for the information in order to perform a contract. Recipients of information shall be required to comply with the requirements of the Privacy Act of 1974, as amended, pursuant to 5 U.S.C. 552a(m).
5. A record related to an International Application filed under the Patent Cooperation Treaty in this system of records may be disclosed, as a routine use, to the International Bureau of the World Intellectual Property Organization, pursuant to the Patent Cooperation Treaty.
6. A record in this system of records may be disclosed, as a routine use, to another federal agency for purposes of National Security review (35 U.S.C. 181) and for review pursuant to the Atomic Energy Act (42 U.S.C. 218(c)).
7. A record from this system of records may be disclosed, as a routine use, to the Administrator, General Services, or his/her designee, during an inspection of records conducted by GSA as part of that agency's responsibility to recommend improvements in records management practices and programs, under authority of 44 U.S.C. 2904 and 2906. Such disclosure shall be made in accordance with the GSA regulations governing inspection of records for this purpose, and any other relevant (*i.e.*, GSA or Commerce) directive. Such disclosure shall not be used to make determinations about individuals.
8. A record from this system of records may be disclosed, as a routine use, to the public after either publication of the application pursuant to 35 U.S.C. 122(b) or issuance of a patent pursuant to 35 U.S.C. 151. Further, a record may be disclosed, subject to the limitations of 37 CFR 1.14, as a routine use, to the public if the record was filed in an application which became abandoned or in which the proceedings were terminated and which application is referenced by either a published application, an application open to public inspection or an issued patent.
9. A record from this system of records may be disclosed, as a routine use, to a Federal, State, or local law enforcement agency, if the USPTO becomes aware of a violation or potential violation of law or regulation.

OIPE
OCT 22 2007
PATENT & TRADEMARK OFFICE

DAC/Pre

IN THE UNITED STATES PATENT AND TRADEMARK OFFICE

In re application of: MICHAEL EDWARD FONK, et al.

Serial No.: 29/249,692 Examiner: Michael Aaron Pratt

Filed: October 18, 2006 Art Unit: 2914

For: TOW HOOK

Attorney Docket No.: ENAS 0103 DUS

PETITION FOR REVIVAL OF A PATENT APPLICATION ABANDONED UNINTENTIONALLY UNDER 37 C.F.R. § 1.137(b)

Mail Stop Petition
Commissioner for Patents
U.S. Patent & Trademark Office
P.O. Box 1450
Alexandria, VA 22313-1450

Adjustment date: 06/30/2008 CKHLOK
10/23/2007 EAYALEW1 00000042 29249692
01 FC:1999 -750.00 OP
06/30/2008 CKHLOK 00000002 023978 29249692
01 FC:2453 20.00 DA 750.00 OP

Dear Sir:

After timely paying the issue fee on August 1, 2007, the above-identified application became abandoned for failure to file a corrected drawings in response to the Examiner's Amendment mailed with the Notice of Allowability on May 7, 2007, which set a three month period for response. The abandonment date of this application is August 8, 2007 (i.e., the day after the expiration date of the period set for response plus any extensions of time obtained therefor).

APPLICANT HEREBY PETITIONS FOR REVIVAL OF THIS APPLICATION

1. Petition fee

_X_ Small entity - fee $750.00 (37 C.F.R. § 1.17(m))

___ Small entity statement enclosed herewith.

___ Small entity statement previously filed.

___ Other than small entity - fee $_____ 37 C.F.R. § 1.17(m))

CERTIFICATE OF MAILING UNDER 37 C.F.R. § 1.8 (FIRST CLASS MAIL)

I hereby certify that this paper, including all enclosures referred to herein, is being deposited with the United States Postal Service as first-class mail, postage pre-paid, in an envelope addressed to: Mail Stop Petition, Commissioner for Patents, U.S. Patent & Trademark Office, P.O. Box 1450, Alexandria, VA 22313-1450 on:

October 16, 2007	William G. Abbatt	
Date of Deposit	Name of Person Signing	Signature

10/23/2007 EAYALEW1 00000042 29249692
750.00 OP
01 FC:1999

IN THE UNITED STATES PATENT AND TRADEMARK OFFICE

In re application of:

Michael Edward Fonk et al.

Group Art Unit: Unknown

Examiner: Unknown

Serial No.: 29/249,692

Filed: October 18, 2006

For: TOW HOOK

Attorney Docket No.: ENAS 0103 DUS

TRANSMITTAL LETTER

Commissioner for Patents
U.S. Patent & Trademark Office
P.O. Box 1450
Alexandria, VA 22313-1450

Sir:

Enclosed with reference to the above matter is the following document:

1. Preliminary Amendment And Substitute Specification.

Please note the Substitute Specification is appended to the Preliminary Amendment.

The Commissioner is hereby authorized to charge any additional fees to our Deposit Account No. 02-3978.

Respectfully submitted,

Michael Edward Fonk et al.

By: _____

William G. Abbatt
Reg. No. 31,936
Attorney/Agent for Applicant

Date: November 30, 2006

BROOKS KUSHMAN P.C.
1000 Town Center, 22nd Floor
Southfield, MI 48075-1238
Phone: 248-358-4400; Fax: 248-358-3351

UNITED STATES PATENT AND TRADEMARK OFFICE

Commissioner for Patents
United States Patent and Trademark Office
P.O. Box 1450
Alexandria, VA 22313-1450
www.uspto.gov

BROOKS KUSHMAN P.C.
1000 TOWN CENTER
TWENTY-SECOND FLOOR
SOUTHFIELD MI 48075

COPY MAILED

OCT 23 2008

OFFICE OF PETITIONS

In re Application of	:	
Michael Edward Fonk, et al.	:	
Application No. 29/249,692	:	ON PETITION
Filed: October 18, 2006	:	
Attorney Docket No. ENAS0103DUS	:	

This is a decision on the renewed petition under 37 CFR 1.137(b), filed August 12, 2008, to revive the above-identified application.

The petition is **GRANTED**.

The application became abandoned for failure to submit formal drawings in a timely manner in reply to the Notice of Allowability, mailed May 7, 2007, which set a period for reply of three (3) months. Accordingly, this application became abandoned on August 8, 2007. The Notice of Abandonment was mailed August 30, 2007.

The petition satisfies the requirements of 37 CFR 1.137(b) in that petitioner has supplied (1) the reply in the form of formal drawings; (2) the petition fee of $770; (3) a terminal disclaimer and fee as required by 37 CFR 1.137(d); and (4) an adequate statement of unintentional delay.

The terminal disclaimer has been accepted and made of record.

Telephone inquiries concerning this decision should be directed to Terri Williams at (571) 272-2991.

The application file is being referred to the Office of Data Management for processing into a patent.

Chris Bottorff
Petitions Examiner
Office of Petitions

PTO/SB/27 (09-06)
Approved for use through 03/31/2007. OMB 0651-0031
U.S. Patent and Trademark Office; U.S. DEPARTMENT OF COMMERCE
Under the Paperwork Reduction Act of 1995, no persons are required to respond to a collection of information unless it displays a valid OMB control number.

REQUEST FOR EXPEDITED EXAMINATION OF A DESIGN APPLICATION (37 CFR 1.155)		
	Application Number	Not Yet Assigned
	Filing Date	Concurrently Herewith
	First Named Inventor	Brian Lapointe
	Title	DESIGN FOR LIGHT UP TOY ROCKET
	Atty Docket Number	PTP-19217/01

29/249,713

ADDRESS TO:
MS Expedited Design
Commissioner for Patents
P.O. Box 1450
Alexandria, VA 22313-1450

This is a request for expedited examination of a design application under 37 CFR 1.155.

NOTE: If the Request made by this form accompanies original application papers, include form PTO/SB/18 "Design Patent Application Transmittal" or its equivalent.

A preexamination search was conducted. The field of search was:

D21/87;D21/452;D21/91;D21/82;446/212;417/63;46/74B;46/44;446/308;124/59;124/66;60/221;124/64;124/73;D86/10

Related applications: _____

If not previously filed for the above-identified application, the following items required by 37 CFR 1.155 are enclosed:

- Formal drawings (see 37 CFR 1.84).
- The fee set forth in 37 CFR 1.17(k).
- An information disclosure statement in compliance with 37 CFR 1.98.

10/23/06
Approved
Jacqueline M. Stone
Jacqueline M. Stone, Director
Technology Center 1700/2900

Signature

October 18, 2006
Date

Douglas J. McEvoy
Typed or printed name

34,385
Registration Number, if applicable

(248) 647-6000
Telephone Number

UNITED STATES PATENT AND TRADEMARK OFFICE

Commissioner for Patents
United States Patent and Trademark Office
P.O. Box 1450
Alexandria, VA 22313-1450
www.uspto.gov

GIFFORD, KRASS, GROH, SPRINKLE &
CITKOWSKI, P.C.
PO BOX 7021
TROY MI 48007-7021

COPY MAILED

JAN 23 2007

OFFICE OF PETITIONS

In re Application of :
Brian Lapointe :
Application No. 29/249,713 : ON PETITION
Filed: October 18, 2006 :
Attorney Docket No. PtP-19217/01 :

This is a decision on the petition, filed January 18, 2007, to withdraw the above-identified application from issue after payment of the issue fee.

The petition is **DISMISSED**.

Petitioner should be aware that this petition, is not the appropriate avenue to have an IDS considered after payment of the issue fee. The appropriate avenue is by way of a petition under 37 CFR 1.313(c).

37 CFR 1.313(c) provides that:

Once the issue fee has been paid, the application will not be withdrawn from issue upon petition by the applicant for any reason except:
(1) Unpatentability of one of more claims, which petition must be accompanied by an unequivocal statement that one or more claims are unpatentable, an amendment to such claim or claims, and an explanation as to how the amendment causes such claim or claims to be patentable;
(2) Consideration of a submission pursuant to 37 CFR 1.114; or
(3) Express abandonment of the application. Such express abandonment may be in favor of a continuing application.

See Changes to Application Examination and Provisional Application Practice, Interim Rule, 65 Fed. Reg. 14865, 14873 (Mar. 20, 2000), 1233 Off. Gaz. Pat. Office 47, 54 (Apr. 11, 2000).

The instant petition is not accompanied by any of the above.

Petitioner should be aware that the filing of an RCE do not apply to a design application. However, the filing of a Continued Prosecution Application (CPA) is proper.

Further, petitioner is encouraged to note 37 CFR 1.313(d).

Further correspondence with respect to this matter should be addressed as follows:

By mail:	Mail Stop Petitions Commissioner for Patents Post Office Box 1450 Alexandria, VA 22313-1450
By facsimile:	(571) 273-8300 Attn: Office of Petitions
By hand:	Randolf Building 401 Dulany Street Alexandria, VA 22314

Telephone inquiries concerning this decision should be directed to the undersigned at (571) 272-3208.

Karen Creasy
Petitions Examiner
Office of Petitions

UNITED STATES PATENT AND TRADEMARK OFFICE

Commissioner for Patents
United States Patent and Trademark Office
P.O. Box 1450
Alexandria, VA 22313-1450
www.uspto.gov

GIFFORD, KRASS, GROH, SPRINKLE &
CITKOWSKI, P.C.
PO BOX 7021
TROY MI 48007-7021

COPY MAILED

JAN 30 2007

OFFICE OF PETITIONS

In re Application of :
Brian Lapointe :
Application No. 29/249,713 : ON PETITION
Filed: October 18, 2006 :
Attorney Docket No. PTP-19217/01 :

This is a decision on the renewed petition, filed January 29, 2007, under 37 CFR 1.313(c)(3) to withdraw the above-identified application from issue after payment of the issue fee.

The petition is **GRANTED**.

The above-identified application is withdrawn from issue in favor of a continued prosecution application (CPA) under 37 CFR 1.53(d).

Petitioner is advised that the issue fee paid on January 3, 2007 in the parent application is not refundable nor can it be applied towards any new Notice of Allowance which may issue on the CPA filed January 29, 2007.

Telephone inquiries should be directed to the undersigned at (571) 272-3208.

This matter is being referred to Technology Center AU 2912 for processing of the CPA.

Karen Creasy

Karen Creasy
Petitions Examiner
Office of Petitions

SPE RESPONSE FOR CERTIFICATE OF CORRECTION

Paper No.: _____

DATE : 2-23-09

TO SPE OF : ART UNIT 2913

SUBJECT : Request for Certificate of Correction for Appl. No.: 29/249724 Patent No.: D586986

Please respond to this request for a certificate of correction within 7 days.

FOR IFW FILES:

Please review the requested changes/corrections as shown in the **COCIN** document(s) in the IFW application image. No new matter should be introduced, nor should the scope or meaning of the claims be changed.

Please complete the response (see below) and forward the completed response to scanning using document code **COCX**.

FOR PAPER FILES:

Please review the requested changes/corrections as shown in the attached certificate of correction. Please complete this form (see below) and forward it with the file to:

Certificates of Correction Branch (CofC)
South Tower - 9A22
Palm Location 7580

Drawings dated 2-11-09. Are these the correct drawings

E. Jones
Certificates of Correction Branch
703-308-9390 ext. _____

Thank You For Your Assistance

The request for issuing the above-identified correction(s) is hereby:
Note your decision on the appropriate box.

- ☒ **Approved** — All changes apply.
- ☐ **Approved in Part** — Specify below which changes **do not** apply.
- ☐ **Denied** — State the reasons for denial below.

Comments: _____

Caron D Veynar

CARON D. VEYNAR
SUPERVISORY PATENT EXAMINER

SPE

2913
Art Unit

UNITED STATES PATENT AND TRADEMARK OFFICE

Commissioner for Patents
United States Patent and Trademark Office
P.O. Box 1450
Alexandria, VA 22313-1450
www.uspto.gov

FISH & RICHARDSON PC
P.O. BOX 1022
MINNEAPOLIS MN 55440-1022

COPY MAILED

FEB 1 1 2008

OFFICE OF PETITIONS

In re Application of :
PRICE, et al. : DECISION GRANTING PETITION
Application No. 29/249,775 : UNDER 37 CFR 1.313(c)(3) (CPA)
Filed: October 20, 2006 :
Attorney Docket No. **02103-757001/AABOP030** :

This is a decision on the petition under 37 CFR 1.313(c)(3), filed February 8, 2008, to withdraw the above-identified application from issue after payment of the issue fee.

The petition is **GRANTED.**

The above-identified application is hereby withdrawn from issue in favor of a continued prosecution application (CPA) under 37 CFR 1.53(d).

Petitioner is advised that the issue fee paid on December 7, 2007 in the parent application is not refundable nor can it be applied towards any new Notice of Allowance which may issue on the CPA filed February 8, 2008.

Telephone inquiries should be directed to Monica A. Graves at (571) 272-7253.

This matter is being referred to Technology Center AU 2915 for processing of the CPA and concurrently filed Information disclosure statement filed February 8, 2008.

The filed does not indicate a change of address has been submitted, although the address given on the petition differs from the address of record. If appropriate, a change of address should be filed in accordance with MPEP 601.03. A courtesy copy of this decision is being mailed to the address given on the petition; however, the office will mail all future correspondence solely to the address of record.

Karen Creasy
Petitions Examiner
Office of Petitions

cc: **FISH & RICHARDSON, PC**
225 FRANKLIN STREET
BOSTON, MA 02110

UNITED STATES PATENT AND TRADEMARK OFFICE

Commissioner for Patents
United States Patent and Trademark Office
P.O. Box 1450
Alexandria, VA 22313-1450
www.uspto.gov

COPY MAILED

FEB 11 2008

OFFICE OF PETITIONS

FISH & RICHARDSON PC
P.O. BOX 1022
MINNEAPOLIS MN 55440-1022

In re Application of
PRICE, et al.
Application No. 29/249,778
Filed: October 20, 2006
Attorney Docket No. **02103-757002/P030**

: DECISION GRANTING PETITION
: UNDER 37 CFR 1.313(c)(3) (CPA)

This is a decision on the petition under 37 CFR 1.313(c)(3), filed February 8, 2008, to withdraw the above-identified application from issue after payment of the issue fee.

The petition is **GRANTED.**

The above-identified application is hereby withdrawn from issue in favor of a continued prosecution application (CPA) under 37 CFR 1.53(d).

Petitioner is advised that the issue fee paid on December 7, 2007 in the parent application is not refundable nor can it be applied towards any new Notice of Allowance which may issue on the CPA filed February 8, 2008.

Telephone inquiries should be directed to Monica A. Graves at (571) 272-7253.

This matter is being referred to Technology Center AU 2915 for processing of the CPA and concurrently filed Information disclosure statement filed February 8, 2008.

The filed does not indicate a change of address has been submitted, although the address given on the petition differs from the address of record. If appropriate, a change of address should be filed in accordance with MPEP 601.03. A courtesy copy of this decision is being mailed to the address given on the petition; however, the office will mail all future correspondence solely to the address of record.

Karen Creasy

Karen Creasy
Petitions Examiner
Office of Petitions

cc: **FISH & RICHARDSON, PC**
225 FRANKLIN STREET
BOSTON, MA 02110

UNITED STATES PATENT AND TRADEMARK OFFICE

Commissioner for Patents
United States Patent and Trademark Office
P.O. Box 1450
Alexandria, VA 22313-1450
www.uspto.gov

BAKER & MCKENZIE LLP
PENNZOIL PLACE, SOUTH TOWER
711 LOUISANNA, SUITE 3400
HOUSTON, TX 77002-2716

COPY MAILED

JUN 19 2007

OFFICE OF PETITIONS

In re Application of
Mark Gajewski
Application No. 29/249,802
Filed: October 23, 2006
Attorney Docket No. 31175330-001666

: DECISION GRANTING PETITION
: UNDER 37 CFR 1.313(c)(3) (CPA)

This is a decision on the petition under 37 CFR 1.313(c)(3), filed June 15, 2007, to withdraw the above-identified application from issue after payment of the issue fee.

The petition is **GRANTED**.

The above-identified application is hereby withdrawn from issue in favor of a continued prosecution application (CPA) under 37 CFR 1.53(d).

Petitioner is advised that the issue fee paid on April 18, 2007 in the parent application is not refundable nor can it be applied towards any new Notice of Allowance, which may issue on the CPA filed June 15, 2007.

Telephone inquiries regarding this decision should be directed to April Wise at (571) 272-1642.

This matter is being referred to Technology Center AU 2911 for processing of the CPA and consideration of the concurrently filed information disclosure statement.

Karen Creasy

Karen Creasy
Petitions Examiner
Office of Petitions

SPE RESPONSE FOR CERTIFICATE OF CORRECTION

Paper No.: X

DATE : November 13,2007

TO SPE OF : ART UNIT 2916

SUBJECT : Request for Certificate of Correction for Appl. No.: 29/249,804 Patent No.: D549818 S

A response is requested with respect to a request for a certificate of correction.

With respect to the change(s) requested to correct Office and/or Applicant's errors, should the patent read as shown in the certificate of correction attached herewith or the COCIN document(s), in IFW images for the above-identified patented application? No new matter should be introduced, nor should the scope or meaning of the claims be changed.

If the response is for an IFW, within **7** days, please complete and forward the response, to the employee (named below) via scanning into application images, using document code **COCX**.

DO NOT SENT TO ATTORNEY

If the response is for a paper file wrapper, please complete the response and forward the response with the paper file wrapper, to the employee (named below), within **7** days, to:

Certificates of Correction Branch (CofC)
South Tower - 9A22
Palm Location 7580

You can fax the Directors/SPE response to 571-270-9990

LAMONTE NEWSOME

Certificates of Correction Branch

703-308-9390 ext. 112

Thank You For Your Assistance

The request for issuing the above-identified correction(s) is hereby:

Note your decision on the appropriate box.

- ☒ **Approved** — All changes apply.
- ☐ **Approved in Part** — Specify below which changes **do not** apply.
- ☐ **Denied** — State the reasons for denial below.

Comments: _____

IAN SIMMONS
SUPERVISORY PATENT EXAMINER

2916

SPE RESPONSE FOR CERTIFICATE OF CORRECTION

Paper No.: X

DATE : November 13,2007

TO SPE OF : ART UNIT 2916

SUBJECT : Request for Certificate of Correction for Appl. No.: 29/249,809 Patent No.: D549317 S

A response is requested with respect to a request for a certificate of correction.

With respect to the change(s) requested to correct Office and/or Applicant's errors, should the patent read as shown in the certificate of correction attached herewith or the COCIN document(s), in IFW images for the above-identified patented application? No new matter should be introduced, nor should the scope or meaning of the claims be changed.

If the response is for an IFW, within **7** days, please complete and forward the response, to the employee (named below) via scanning into application images, using document code **COCX**.

DO NOT SENT TO ATTORNEY

If the response is for a paper file wrapper, please complete the response and forward the response with the paper file wrapper, to the employee (named below), within **7** days, to:

Certificates of Correction Branch (CofC)
South Tower - 9A22
Palm Location 7580

You can fax the Directors/SPE response to 571-270-9990

LAMONTE NEWSOME

Certificates of Correction Branch

703-308-9390 ext. 112

Thank You For Your Assistance

The request for issuing the above-identified correction(s) is hereby:

Note your decision on the appropriate box.

- ☒ **Approved** — **All** changes apply.
- ☐ **Approved in Part** — Specify below which changes **do not** apply.
- ☐ **Denied** — State the reasons for denial below.

Comments: _____

IAN SIMMONS
SUPERVISORY PATENT EXAMINER

2916

SPE RESPONSE FOR CERTIFICATE OF CORRECTION

Paper No.: X

DATE : November 13,2007

TO SPE OF : ART UNIT 2916

SUBJECT : Request for Certificate of Correction for Appl. No.: 29/249,812 Patent No.: D551338 S

A response is requested with respect to a request for a certificate of correction.

With respect to the change(s) requested to correct Office and/or Applicant's errors, should the patent read as shown in the certificate of correction attached herewith or the COCIN document(s), in IFW images for the above-identified patented application? No new matter should be introduced, nor should the scope or meaning of the claims be changed.

If the response is for an IFW, within **7** days, please complete and forward the response, to the employee (named below) via scanning into application images, using document code **COCX**.

DO NOT SENT TO ATTORNEY

If the response is for a paper file wrapper, please complete the response and forward the response with the paper file wrapper, to the employee (named below), within **7** days, to:

Certificates of Correction Branch (CofC)
South Tower - 9A22
Palm Location 7580

You can fax the Directors/SPE response to 571-270-9990

LAMONTE NEWSOME

Certificates of Correction Branch

703-308-9390 ext. 112

Thank You For Your Assistance

The request for issuing the above-identified correction(s) is hereby:

Note your decision on the appropriate box.

☒ **Approved** — (**All** changes apply.)

☐ **Approved in Part** — Specify below which changes **do not** apply.

☐ **Denied** — State the reasons for denial below.

Comments: _____

IAN SIMMONS
SUPERVISORY PATENT EXAMINER

2916

UNITED STATES PATENT AND TRADEMARK OFFICE

Commissioner for Patents
United States Patent and Trademark Office
P.O. Box 1450
Alexandria, VA 22313-1450
www.uspto.gov

BAKER & MCKENZIE LLP
PENNZOIL PLACE, SOUTH TOWER
711 LOUISANNA, SUITE 3400
HOUSTON, TX 77002-2716

COPY MAILED

JUN 19 2007

OFFICE OF PETITIONS

In re Application of
Mark Gajewski
Application No. 29/249,825
Filed: October 23, 2006
Attorney Docket No. 31175330-001659

: DECISION GRANTING PETITION
: UNDER 37 CFR 1.313(c)(3) (CPA)

This is a decision on the petition under 37 CFR 1.313(c)(3), filed June 15, 2007, to withdraw the above-identified application from issue after payment of the issue fee.

The petition is **GRANTED**.

The above-identified application is hereby withdrawn from issue in favor of a continued prosecution application (CPA) under 37 CFR 1.53(d).

Petitioner is advised that the issue fee paid on April 18, 2007 in the parent application is not refundable nor can it be applied towards any new Notice of Allowance, which may issue on the CPA filed June 15, 2007.

Telephone inquiries regarding this decision should be directed to April Wise at (571) 272-1642.

This matter is being referred to Technology Center AU 2911 for processing of the CPA and consideration of the concurrently filed information disclosure statement.

Karen Creasy

Karen Creasy
Petitions Examiner
Office of Petitions

UNITED STATES PATENT AND TRADEMARK OFFICE

COMMISSIONER FOR PATENTS
UNITED STATES PATENT AND TRADEMARK OFFICE
P.O. BOX 1450
ALEXANDRIA, VA 22313-1450
www.uspto.gov

MICHAEL A. O'NEIL, P.C.
5949 SHERRY LANE, SUITE 820
DALLAS, TX 75225

COPY MAILED

DEC 0 5 2007

OFFICE OF PETITIONS

In re Application of :
Jennifer D. Dossett :
Application No. 29/249,827 : ON PETITION
Filed: October 23, 2006 :
Attorney Docket No. 100330-4002 :

This is a decision on the petition, filed July 5, 2007, to revive the above-identified application under 37 CFR 1.137(b).

The petition is **DISMISSED**.

Any request for reconsideration of this decision must be submitted within TWO (2) MONTHS from the mail date of this decision. Extensions of time under 37 CFR 1.136(a) are permitted. The reconsideration request should include a cover letter entitled "Renewed Petition under 37 CFR 1.137(b)." This is **not** a final agency action within the meaning of 5 U.S.C. § 704.

The application became abandoned for failure to pay the issue fee on or before June 6, 2007. A Notice of Abandonment was mailed on June 29, 2007. In response, on July 5, 2007, the present petition was filed.

A grantable petition under 37 CFR 1.137(b)[1] must be accompanied by: (1) the required reply,[2] unless previously filed; (2) the petition fee as set forth in 37 CFR 1.17(m); (3) a statement that the entire delay in filing the required reply from the due date for the reply until the filing of a grantable petition pursuant to 37 CFR 1.137(b) was unintentional; and (4) any terminal disclaimer (and fee as set forth in 37 CFR 1.20(d)) required by 37 CFR 1.137(c). Where there is a question as to whether either the abandonment or the delay in filing a petition under 37 CFR 1.137 was unintentional, the Commissioner may require additional information. See MPEP 711.03(c)(II)(C) and (D).

[1] As amended effective December 1, 1997. See Changes to Patent Practice and Procedure; Final Rule Notice, 62 Fed. Reg. 53131, 53194-95 (October 10, 1997), 1203 Off. Gaz. Pat. Office 63, 119-20 (October 21, 1997).

[2] In a nonprovisional application abandoned for failure to prosecute, the required reply may be met by the filing of a continuing application. In an application or patent, abandoned or lapsed for failure to pay the issue fee or any portion thereof, the required reply must be the payment of the issue fee or any outstanding balance thereof.

The petition lacks item (4) above. Since the above-identified application is a design application, 37 CFR 1.137(d) requires a terminal disclaimer dedicating to the public a terminal part of the term of any patent granted thereon equivalent to the period of abandonment of the application. The period of abandonment will be computed to be the number of months from the date of abandonment to the date of filing a grantable petition. A terminal disclaimer fee of $130 ($65 if small entity) is required. If the terminal disclaimer is signed by an assignee, the assignee must comply with the requirements of 37 CFR 3.73(b).

Further correspondence with respect to this matter should be addressed as follows:

By mail:
Mail Stop PETITION
Commissioner for Patents
Post Office Box 1450
Alexandria, VA 22313-1450

By hand:
U.S. Patent and Trademark Office
Customer Service Window, Mail Stop PETITION
Randolph Building
401 Dulany Street
Alexandria, VA 22314

The centralized facsimile number is **(571) 273-8300**.

Any questions concerning this matter may be directed to the undersigned at (571) 272-3204.

Sherry D. Brinkley
Petitions Examiner
Office of Petitions

UNITED STATES PATENT AND TRADEMARK OFFICE

Commissioner for Patents
United States Patent and Trademark Office
P.O. Box 1450
Alexandria, VA 22313-1450
www.uspto.gov

MICHAEL A. O'NEIL, P.C.
5949 SHERRY LANE, SUITE 820
DALLAS, TX 75225

COPY MAILED

APR 2 2 2008

OFFICE OF PETITIONS

In re Application of
Jennifer D. Dossett
Application No. 29/249,827
Filed: October 23, 2006
Attorney Docket No. 100330-4002

ON PETITION

This is a decision on the renewed petition under 37 CFR 1.137(b), filed December 10, 2007, to revive the above-identified design application.

The petition is **GRANTED**.

The application became abandoned for failure to timely pay the issue fee on or before June 6, 2007, as required by the Notice of Allowance and Fee(s) Due, mailed March 6, 2007, which set a statutory period for reply of three (3) months. A Notice of Abandonment was mailed on June 29, 2007. In response, on July 5, 2007, a petition under 37 CFR 1.137(b) was filed; however, the petition was dismissed in a decision mailed December 5, 2007. On December 10, 2007, the present petition was filed.

The petition now satisfies the requirements of 37 CFR 1.137(b) in that petitioner has supplied (1) the reply in the form of the $400 issue fee, (2) the petition fee of $750, (3) an adequate statement of unintentional delay, and (4) a terminal disclaimer and fee as required by 37 CFR 1.137(d). Accordingly, the failure to timely pay the issue fee as required by the Notice of March 6, 2007 is accepted as being unintentionally delayed.

It is noted that petitioner submitted a $770 petition fee with the present petition. As no further petition fee is required for reconsideration of the original petition, the $770 is being refunded in the form of a credited to counsel's deposit account.

The terminal disclaimer filed December 10, 2007 is accepted and has been made of record. Any continuing application filed from this application must contain a copy of the terminal disclaimer. The copy of the terminal disclaimer must be filed with a cover letter requesting the terminal disclaimer be recorded on the continuing application. A copy of this decision should be attached to the cover letter.

The application is being referred to the Office of Data Management to be processed into a patent.

Telephone inquires related to this decision should be directed to the undersigned at (571) 272-3204. Telephone inquiries related to processing as a patent should be directed to (571) 272-4200.

Sherry D. Brinkley
Petitions Examiner
Office of Petitions

UNITED STATES PATENT AND TRADEMARK OFFICE

Commissioner for Patents
United States Patent and Trademark Office
P.O. Box 1450
Alexandria, VA 22313-1450
www.uspto.gov

BALLY GAMING INC.
6601 S. BERMUDA ROAD
LAS VEGAS NV 89119

COPY MAILED

SEP 09 2008

In re Application of :
Gordon H. **Meyers et al.** :
Application No. 29/249,841 : DECISION ON PETITION
Filed: October 24, 2006 :
Attorney Docket No. 11111-05GM06 :

This is a decision on the petition under 37 CFR 1.137(b), filed October 25, 2007, to revive the above-identified design application.

The petition is GRANTED.

The application became abandoned for failure to timely file both corrected drawings and the issue fee on or before September 4, 2007, as required by the Notice of Allowance and Fee(s) Due, mailed June 1, 2007, which set a statutory period for reply of three (3) months. Accordingly, the application became abandoned on September 2, 2007. A Notice of Abandonment was mailed on September 26, 2007.

The petition satisfies the requirements of 37 CFR 1.137(b) in that petitioner has supplied (1) the reply in the form of the $820.00 issue fee, (2) the petition fee of $1540.00, (3) a proper statement of unintentional delay, and (4) a terminal disclaimer and fee as required by 37 CFR 1.137(d). Accordingly, the failure to timely file corrected drawings and pay the issue fee, as required by the Notice of Allowance, is accepted as being unintentionally delayed.

The terminal disclaimer is accepted and has been made of record. Any continuing application filed from this application must contain a copy of the terminal disclaimer. The copy of the terminal disclaimer must be filed with a cover letter requesting the terminal disclaimer be recorded on the continuing application. A copy of this decision should be attached to the cover letter.

There is no indication that the person signing the petition was ever given a power of attorney to prosecute the application. If the person signing the petition desires to receive future correspondence regarding this application, the appropriate power of attorney documents must be submitted. While a courtesy copy of this decision is being mailed to the person signing the petition, all future correspondence will be directed to the address currently of record until appropriate instructions are received.

It is not apparent whether the person signing the statement of unintentional delay was in a position to have firsthand knowledge of the facts and circumstances of the delay at issue. Nevertheless, such statement is being treated as having been made as a result of a reasonable inquiry into the facts and circumstances of such delay. See 37 CFR 10.18(b) and Changes to Patent Practice and Procedure; Final Rule Notice, 62 Fed. Reg. 53131, 53178 (October 10, 1997), 1203 Off. Gaz. Pat. Office 63, 103 (October 21, 1997). In the event such an inquiry has not been made, petitioner must make such an inquiry. If such inquiry results in the discovery that it is not correct that the entire delay in filing the required reply from the due date for the reply until the filing of a grantable petition pursuant to 37 CFR 1.137(b) was unintentional, petitioner must notify the Office.

Telephone inquiries concerning this decision should be directed to Phyllis Spivack at (571) 272-6052 or in her absence, the undersigned at 571-272-7099.

This application is being referred to the Office of Data Management for further processing in accordance with this decision on petition.

David Bucci
Petitions Examiner
Office of Petitions

cc: JP Cody, Esq.
Bally Technologies Legal Dept.
6601 South Bermuda Drive
Las Vegas, NV 89119

UNITED STATES PATENT AND TRADEMARK OFFICE

Commissioner for Patents
United States Patent and Trademark Office
P.O. Box 1450
Alexandria, VA 22313-1450
www.uspto.gov

BALLY GAMING INC.
6601 S. BERMUDA ROAD
LAS VEGAS NV 89119

COPY MAILED

SEP 10 2008

In re Application of :
Robert A. **Luciano**, Jr. et al. :
Application No. 29/249,841 : DECISION ON PETITION
Filed: October 24, 2006 :
Attorney Docket No. 11111-05GM06 :

This is a decision on the petition under 37 CFR 1.137(b), filed October 25, 2007, to revive the above-identified design application.

The petition is GRANTED.

The application became abandoned for failure to timely file both corrected drawings and the issue fee on or before September 4, 2007, as required by the Notice of Allowance and Fee(s) Due, mailed June 1, 2007, which set a statutory period for reply of three (3) months. Accordingly, the application became abandoned on September 2, 2007. A Notice of Abandonment was mailed on September 26, 2007.

The petition satisfies the requirements of 37 CFR 1.137(b) in that petitioner has supplied (1) the reply in the form of the $820.00 issue fee, (2) the petition fee of $1540.00, (3) a proper statement of unintentional delay, and (4) a terminal disclaimer and fee as required by 37 CFR 1.137(d). Accordingly, the failure to timely file corrected drawings and pay the issue fee, as required by the Notice of Allowance, is accepted as being unintentionally delayed.

The terminal disclaimer is accepted and has been made of record. Any continuing application filed from this application must contain a copy of the terminal disclaimer. The copy of the terminal disclaimer must be filed with a cover letter requesting the terminal disclaimer be recorded on the continuing application. A copy of this decision should be attached to the cover letter.

There is no indication that the person signing the petition was ever given a power of attorney to prosecute the application. If the person signing the petition desires to receive future correspondence regarding this application, the appropriate power of attorney documents must be submitted. While a courtesy copy of this decision is being mailed to the person signing the petition, all future correspondence will be directed to the address currently of record until appropriate instructions are received.

It is not apparent whether the person signing the statement of unintentional delay was in a position to have firsthand knowledge of the facts and circumstances of the delay at issue. Nevertheless, such statement is being treated as having been made as a result of a reasonable inquiry into the facts and circumstances of such delay. See 37 CFR 10.18(b) and Changes to Patent Practice and Procedure; Final Rule Notice, 62 Fed. Reg. 53131, 53178 (October 10, 1997), 1203 Off. Gaz. Pat. Office 63, 103 (October 21, 1997). In the event such an inquiry has not been made, petitioner must make such an inquiry. If such inquiry results in the discovery that it is not correct that the entire delay in filing the required reply from the due date for the reply until the filing of a grantable petition pursuant to 37 CFR 1.137(b) was unintentional, petitioner must notify the Office.

Telephone inquiries concerning this decision should be directed to Phyllis Spivack at (571) 272-6052 or in her absence, the undersigned at 571-272-7099.

This application is being referred to the Office of Data Management for further processing in accordance with this decision on petition.

David Bucci
Petitions Examiner
Office of Petitions

cc: JP Cody, Esq.
Bally Technologies Legal Dept.
6601 South Bermuda Drive
Las Vegas, NV 89119

UNITED STATES PATENT AND TRADEMARK OFFICE

Commissioner for Patents
United States Patent and Trademark Office
P.O. Box 1450
Alexandria, VA 22313-1450
www.uspto.gov

BALLY GAMING INC.
6601 S. BERMUDA ROAD
LAS VEGAS NV 89119

COPY MAILED

NOV 0 5 2008

OFFICE OF PETITIONS

In re Application of :
Gordon H. MEYERS et al. :
Application No. 29/249,842 : DECISION ON PETITION
Filed: October 24, 2006 :
Attorney Docket No. 11111-05GM06 :

This is a decision on the petition under 37 CFR 1.137(b), filed October 24, 2007, to revive the above-identified application.

The petition is **DISMISSED**.

Any request for reconsideration of this decision must be submitted within TWO (2) MONTHS from the mail date of this decision. Extensions of time under 37 CFR 1.136(a) are permitted. The reconsideration request should include a cover letter entitled "Renewed Petition under 37 CFR 1.137(b)." This is **not** a final agency action within the meaning of 5 U.S.C. § 704.

This application became abandoned for failure to timely pay the issue and publication fees and to submit corrected formal drawings on or before September 4, 2007, as required by the Notice of Allowance and Fee(s) Due and the Notice of Allowability, mailed June 1, 2007. The Notice set a period for reply of three (3) months from the mail date of the Notice. No extensions of time under the provisions of 37 CFR 1.136(a) were obtained. Accordingly, the application became abandoned on September 1, 2007.

A grantable petition under 37 CFR 1.137(b) must be accompanied by: (1) the required reply, unless previously filed; (2) the petition fee as set forth in 37 CFR 1.17(m); (3) a statement that the entire delay in filing the required reply from the due date for the reply until the filing of a grantable petition pursuant to 37 CFR 1.137(b) was unintentional; and (4) any terminal disclaimer (and fee as set forth in 37 CFR 1.20(d)) required by 37 CFR 1.137(d). Where there is a question as to whether either the abandonment or the delay in filing a petition under 37 CFR 1.137 was unintentional, the Director may require additional information. See MPEP 711.03(c)(II)(C) and (D). The instant petition lacks item(s) (4).

The entire issue fee of $820 and the entire petition fee of $1540 have been charged to deposit account 503635.

Turning to item (4) above, since the above-identified application is a utility or plant application filed before June 8, 1995, 37 CFR 1.137(d) requires a terminal disclaimer dedicating to the public a terminal part of the term of any patent granted on the application or any patent granted on any continuing application that contains a specific reference under 35 U.S.C. 120, 121, or 365(c) to the application. The period to be disclaimed will be a terminal part of the patent to be granted equivalent to the period of abandonment. If the terminal disclaimer is signed by an assignee, the assignee must comply with the requirements of 37 CFR 3.73(b). The terminal disclaimer is not considered at this time to be a properly submitted disclaimer.

In this regard, the terminal disclaimer is signed by J. P. Cody. Petitioner's attention is directed to 37 CFR 1.321(b), which states:

> 1.321 Statutory disclaimers, including terminal disclaimers.
> (b) An applicant or assignee may disclaim or dedicate to the public the entire term, or any terminal part of the term, of a patent to be granted. Such terminal disclaimer is binding upon the grantee and its successors or assigns. The terminal disclaimer, to be recorded in the Patent and Trademark Office, must:
> (1) Be signed:
> (i) By the applicant, or
> (ii) If there is an assignee of record of an undivided part interest, by the applicant and such assignee, or
> (iii) If there is an assignee of record of the entire interest, by such assignee, or
> (iv) By an attorney or agent of record;
> (2) Specify the portion of the term of the patent being disclaimed;
> (3) State the present extent of applicant's or assignee's ownership interest in the patent to be granted; and
> (4) Be accompanied by the fee set forth in § 1.20(d).

Mr. Cody is signing as an attorney or agent of record; however, Mr. Cody on has not been given a power of attorney in this case.

As to item (3) above, it is not apparent whether the person signing the statement of unintentional delay was in a position to have firsthand or direct knowledge of the facts and circumstances of the delay at issue. Nevertheless, such statement is being treated as having been made as the result of a reasonable inquiry into the facts and circumstances of such delay. See 37 CFR 10.18(b) and Changes to Patent Practice and Procedure; Final Rule Notice, 62 Fed. Reg. 53131, 53178 (October 10, 1997), 1203 Off. Gaz. Pat. Office 63, 103 (October 21, 1997). In the event that such an inquiry has not been made, petitioner must make such an inquiry. If such inquiry results in the discovery that it is not correct that the entire delay in filing the required reply from the due date for the reply until the filing of a grantable petition pursuant to 37 CFR 1.137(b) was unintentional, petitioner must notify the Office.

Further correspondence with respect to this matter should be addressed as follows:

By mail: Mail Stop PETITIONS
Commissioner for Patents
Post Office Box 1450
Alexandria, VA 22313-1450

By hand: Customer Service Window
Mail Stop Petitions
Randolph Building
401 Dulany Street
Alexandria, VA 22314

By fax: (703) 872-9306
ATTN: Office of Petitions

Any questions concerning this matter may be directed to the K. Reichle at (571) 272-6051.

David Bucci
Petitions Examiner
Office of Petitions

UNITED STATES PATENT AND TRADEMARK OFFICE

Commissioner for Patents
United States Patent and Trademark Office
P.O. Box 1450
Alexandria, VA 22313-1450
www.uspto.gov

BALLY GAMING INC.
6601 S. BERMUDA ROAD
LAS VEGAS NV 89119

RECEIVED

JAN 30 2009

OFFICE OF PETITIONS

In re Application of :
Gordon H. MYERS :
Application No. 29/249,842 : ON PETITION
Filed: October 24, 2006 :
Attorney Docket No. 11111-05GM06 :

This is a decision on the renewed petition under 37 CFR 1.137(b), filed December 10, 2008, to revive the above-identified application.

The petition is **DISMISSED**.

Any request for reconsideration of this decision must be submitted within TWO (2) MONTHS from the mail date of this decision. Extensions of time under 37 CFR 1.136(a) are permitted. The reconsideration request should include a cover letter entitled "Renewed Petition under 37 CFR 1.137(b)." This is **not** a final agency action within the meaning of 5 U.S.C. § 704.

This application became abandoned for failure to timely pay the issue and publication fees and to submit corrected formal drawings on or before September 4, 2007, as required by the Notice of Allowance and Fee(s) Due and the Notice of Allowability, mailed June 1, 2007. The Notice set a period for reply of three (3) months from the mail date of the Notice. No extensions of time under the provisions of 37 CFR 1.136(a) were obtained. Accordingly, the application became abandoned on September 1, 2007.

A grantable petition under 37 CFR 1.137(b) must be accompanied by: (1) the required reply, unless previously filed; (2) the petition fee asset forth in 37 CFR 1.17(m); (3) a statement that the entire delay in filing the required reply from the due date for the reply until the filing of a grantable petition pursuant to 37 CFR 1.137(b) was unintentional; and (4) any terminal disclaimer (and fee as set forth in 37 CFR 1.20(d)) required by 37 CFR 1.137(d). Where there is a question as to whether either the abandonment or the delay in filing a petition under 37 CFR 1.137 was unintentional, the Director may require additional information. See MPEP 711.03(c)(II)(C) and (D). The instant petition lacks item(s) (3) and (4).

As to item (3), the statement of unintentional delay is not considered at this time to be a properly submitted statement because it lacks a statement that the entire delay in filing the required reply from the due date for the reply until the filing of a grantable petition pursuant to 37 CFR 1.137(b) was unintentional.

As to item (4), the terminal disclaimer, filed December 10, 2008, is not acceptable as it was signed by the assignee. A terminal disclaimer signed by an assignee must be accompanied by a statement under 37 CFR 3.73(b). See MPEP § 324. Form PTO/SB/96 may be used for making this certification.

Further correspondence with respect to this matter should be addressed as follows:

By Mail:
Mail Stop PETITION
Commissioner for Patents
P. O. Box 1450
Alexandria, VA 22313-1450

By hand:
U. S. Patent and Trademark Office
Customer Service Window, Mail Stop Petitions
Randolph Building
401 Dulany Street
Alexandria, VA 22314

The centralized facsimile number is **(571) 273-8300.**

Telephone inquiries concerning this decision should be directed to Felix O. Figueroa at (571) 272-6052 or in his absence to the undersigned at (571) 272-7099.

David Bucci
Petitions Examiner
Office of Petitions

UNITED STATES PATENT AND TRADEMARK OFFICE

Commissioner for Patents
United States Patent and Trademark Office
P.O. Box 1450
Alexandria, VA 22313-1450
www.uspto.gov

BALLY GAMING INC.
6601 S. BERMUDA ROAD
LAS VEGAS NV 89119

MAILED

AUG 28 2009

OFFICE OF PETITIONS

In re Application of :
Gordon H. Myers et al. :
Application No. 29/249,842 : DECISION ON PETITION
Filed: October 24, 2006 :
Attorney Docket No. 11111-05GM06 :

This is a decision on the renewed petition under the unintentional provisions of 37 CFR 1.137(b), filed April 2, 2009, to revive the above-identified application.

The petition is **GRANTED**.

This application became abandoned for failure to timely pay the issue and publication fees and to submit corrected formal drawings on or before September 1, 2007, as required by the Notice of Allowance and Fee(s) Due and Notice of Allowability, mailed June 1, 2007. Accordingly, the date of abandonment of this application is September 2, 2007.

The petition satisfies the requirements of 37 CFR 1.137(b) in that petitioner has supplied (1) the reply in the form of payment of the issue fee of $430, (2) the petition fee of $810; (3) a proper statement of unintentional delay; (4) the corrected drawings; and (5) the Terminal Disclaimer. Accordingly, the payment of the Issue Fee is accepted as being unintentionally delayed.

Telephone inquiries concerning this decision should be directed to Ron Abelson at (571) 272-3165 or the undersigned at (571) -272-7099.

This application is being referred to the office of Data Management for processing into a patent.

David Bucci
Petititions Examiner
Office of Petitions

UNITED STATES PATENT AND TRADEMARK OFFICE

Commissioner for Patents
United States Patent and Trademark Office
P.O. Box 1450
Alexandria, VA 22313-1450
www.uspto.gov

THE ESTEE LAUDER COS, INC
155 PINELAWN ROAD
STE 345 S
MELVILLE NY 11747

COPY MAILED

SEP 24 2008

OFFICE OF PETITIONS

In re Application of :
Charles P. NEUNER et al. :
Application No. 29/249,859 : DECISION ON PETITION
Filed: October 24, 2006 :
Attorney Docket No. **06.29** :

This is a decision on the petition under 37 CFR 1.137(b), filed May 07, 2008, to revive the above-identified design application.

The petition is **GRANTED**.

The application became abandoned for failure to timely submit corrected drawings on or before April 08, 2008, as required by the Notice of Allowance and Fee(s) Due, mailed January 08, 2008, which set a statutory period for reply of three (3) months. Accordingly, the application became abandoned on April 09, 2008.

The petition satisfies the requirements of 37 CFR 1.137(b) in that petitioner has supplied (1) the reply in the form of the corrected drawings, (2) the petition fee of $1540, (3) a proper statement of unintentional delay, and (4) a terminal disclaimer and fee as required by 37 CFR 1.137(d). Accordingly, the failure to timely submit corrected drawings as required by the Notice of January 08, 2008 is accepted as being unintentionally delayed.

The terminal disclaimer is accepted and has been made of record. Any continuing application filed from this application must contain a copy of the terminal disclaimer. The copy of the terminal disclaimer must be filed with a cover letter requesting the terminal disclaimer be recorded on the continuing application. A copy of this decision should be attached to the cover letter.

Telephone inquiries concerning this decision should be directed to Tredelle Jackson at (571)272-2783.

This application is being referred to the Office of Data Management for further processing in accordance with this decision on petition.

Ramesh Krishnamurthy
Petitions Examiner
Office of Petitions

PTO/SB/83 (01-08)
Approved for use through 05/31/2008. OMB 0651-0031
U.S. Patent and Trademark Office; U.S. DEPARTMENT OF COMMERCE
Under the Paperwork Reduction Act of 1995, no persons are required to a collection of information unless it displays a valid OMB control number.

TERMINAL DISCLAIMER TO ACCOMPANY PETITION

Docket Number (Optional)
06.29

RECEIVED
CENTRAL FAX CENTER
MAY 07 2008

In re Application of:

Name: Neuner, et al.

Application Number: 29/249859

Filed: October 24, 2006

For: Head For A Cosmetic Applicator

05/08/2008 PCHOMP1 00000012 051320 29249859
02 FC:1814 130.00 DA

The owner*, ELC Management LLC of 100 percent interest in the above-identified application hereby disclaims a terminal part of the term of any patent granted the above-identified application equivalent to: (1) if the above-identified application is a design application, the period of abandonment of the above-identified application, and (2) if the above-identified application is a utility or plant application, the lesser of: (a) the period of abandonment of the application; or (b) the period extending beyond twenty years from the date on which the above-identified application was filed in the United States or, if the application contains a specific reference to an earlier filed application(s) under 35 U.S.C. 120, 121, or 365(c), from the date on which the earliest such application was filed. This disclaimer also applies to any patent granted on a utility or plant application filed before June 8, 1995, or a design application, that contains a specific reference under 35 U.S.C. 120, 121, or 365(c) to the above-identified application. This disclaimer is binding upon the grantee, and its successors or assigns.

Check either box 1 or 2 below, if appropriate.

1. ☐ For submissions on behalf of an organization (e.g., corporation, partnership, university, government agency, etc.), the undersigned is empowered to act on behalf of the organization.

2. ☑ The undersigned is an attorney or agent of record. Registration Number 56,310.

Signature — 5/7/08 Date

Yongzhi (Mimi) Yang — Typed or Printed Name

631-414-6089 — Telephone Number

☑ Terminal disclaimer fee under 37 CFR 1.20(d) included.

WARNING: Information on this form may become public. Credit card information should not be included on this form. Provide credit card information and authorization on PTO-2038.

* Statement under 37 CFR 3.73(b) is required if terminal disclaimer is signed by the assignee (owner). Form PTO/SB/96 may be used for making this certification. See MPEP § 324.

This collection of information is required by 37 CFR 1.137. The information is required to obtain or retain a benefit by the public which is to file (and by the USPTO to process) an application. Confidentiality is governed by 35 U.S.C. 122 and 37 CFR 1.11 and 1.14. This collection is estimated to take 12 minutes to complete, including gathering, preparing, and submitting the completed application form to the USPTO. Time will vary depending upon the individual case. Any comments on the amount of time you require to complete this form and/or suggestions for reducing this burden, should be sent to the Chief Information Officer, U.S. Patent and Trademark Office, U.S. Department of Commerce, P.O. Box 1450, Alexandria, VA 22313-1450. DO NOT SEND FEES OR COMPLETED FORMS TO THIS ADDRESS. SEND TO: Commissioner for Patents, P.O. Box 1450, Alexandria, VA 22313-1450.

If you need assistance in completing the form, call 1-800-PTO-9199 and select option 2.

PTO/SB/64 (01-08)
Approved for use through 05/31/2008. OMB 0651-0031
U.S. Patent and Trademark Office; U.S. DEPARTMENT OF COMMERCE
Under the Paperwork Reduction Act of 1995, no persons are required to respond to a collection of information unless it displays a valid OMB control number.

PETITION FOR REVIVAL OF AN APPLICATION FOR PATENT ABANDONED UNINTENTIONALLY UNDER 37 CFR 1.137(b)

Docket Number (Optional): 08.29

RECEIVED
CENTRAL FAX CENTER
MAY 07 2008

First named inventor: Neuner, C.

Application No.: 29/249859 Art Unit: 2911

Filed: October 24, 2008 Examiner: L. Tabor

Title: Head For A Cosmetic Applicator

Attention: Office of Petitions
Mail Stop Petition
Commissioner for Patents
P.O. Box 1450
Alexandria, VA 22313-1450
FAX (571) 273-8300

05/08/2008 PCHOHP1 00000012 051320 29249859
01 FC:1453 1540.00 DA

NOTE: If information or assistance is needed in completing this form, please contact Petitions Information at (571) 272-3282.

The above-identified application became abandoned for failure to file a timely and proper reply to a notice or action by the United States Patent and Trademark Office. The date of abandonment is the day after the expiration date of the period set for reply in the office notice or action plus an extensions of time actually obtained.

APPLICANT HEREBY PETITIONS FOR REVIVAL OF THIS APPLICATION

NOTE: A grantable petition requires the following items:
(1) Petition fee;
(2) Reply and/or issue fee;
(3) Terminal disclaimer with disclaimer fee - required for all utility and plant applications filed before June 8, 1995; and for all design applications; and
(4) Statement that the entire delay was unintentional.

1. Petition fee

☐ Small entity-fee $ _____ (37 CFR 1.17(m)). Applicant claims small entity status. See 37 CFR 1.27.

☑ Other than small entity – fee $ 1540.00 (37 CFR 1.17(m))

2. Reply and/or fee

A. The reply and/or fee to the above-noted Office action in the form of corrected drawings (identify type of reply):

☐ has been filed previously on _____.
☑ is enclosed herewith.

B. The issue fee and publication fee (if applicable) of $ _____.

☑ has been paid previously on March 27, 2008.
☐ is enclosed herewith.

This collection of information is required by 37 CFR 1.137(b). The information is required to obtain or retain a benefit by the public which is to file (and by the USPTO to process) an application. Confidentiality is governed by 35 U.S.C. 122 and 37 CFR 1.11 and 1.14. This collection is estimated to take 1.0 hour to complete, including gathering, preparing, and submitting the completed application form to the USPTO. Time will vary depending upon the individual case. Any comments on the amount of time you require to complete this form and/or suggestions for reducing this burden, should be sent to the Chief Information Officer, U.S. Patent and Trademark Office, U.S. Department of Commerce, P.O. Box 1450, Alexandria, VA 22313-1450. DO NOT SEND FEES OR COMPLETED FORMS TO THIS ADDRESS. SEND TO: **Mail Stop Petition, Commissioner for Patents, P.O. Box 1450, Alexandria, VA 22313-1450.**

If you need assistance in completing the form, call 1-800-PTO-9199 and select option 2.

RECEIVED
CENTRAL FAX CENTER
MAY 07 2008

PTO/SB/64 (01-08)
Approved for use through 05/31/2008. OMB 0651-0031
U.S. Patent and Trademark Office; U.S. DEPARTMENT OF COMMERCE
Under the Paperwork Reduction Act of 1995, no persons are required to respond to a collection of information unless it displays a valid OMB control number.

3. Terminal disclaimer with disclaimer fee

☐ Since this utility/plant application was filed on or after June 8, 1995, no terminal disclaimer is required.

☑ A terminal disclaimer (and disclaimer fee (37 CFR 1.20(d)) of $ 130.00 for a small entity or $ _____ for other than a small entity) disclaiming the required period of time is enclosed herewith (see PTO/SB/63).

4. STATEMENT: The entire delay in filing the required reply from the due date for the required reply until the filing of a grantable petition under 37 CFR 1.137(b) was unintentional. [NOTE: The United States Patent and Trademark Office may require additional information if there is a question as to whether either the abandonment or the delay in filing a petition under 37 CFR 1.137(b) was unintentional (MPEP 711.03(c), subsections (III)(C) and (D)).]

WARNING:

Petitioner/applicant is cautioned to avoid submitting personal information in documents filed in a patent application that may contribute to identity theft. Personal information such as social security numbers, bank account numbers, or credit card numbers (other than a check or credit card authorization form PTO-2038 submitted for payment purposes) is never required by the USPTO to support a petition or an application. If this type of personal information is included in documents submitted to the USPTO, petitioners/applicants should consider redacting such personal information from the documents before submitting them to the USPTO. Petitioner/applicant is advised that the record of a patent application is available to the public after publication of the application (unless a non-publication request in compliance with 37 CFR 1.213(a) is made in the application) or issuance of a patent. Furthermore, the record from an abandoned application may also be available to the public if the application is referenced in a published application or an issued patent (see 37 CFR 1.14). Checks and credit card authorization forms PTO-2038 submitted for payment purposes are not retained in the application file and therefore are not publicly available.

_____ Signature

5/7/2008 Date

Yongzhi (Mimi) Yang Typed or printed name

56,310 Registration Number, if applicable

Suite 345 South, 155 Pinelawn Road Melville NY 11747 Address

631-414-6089 Telephone Number

/ Address

Enclosures:
☑ Fee Payment
☑ Reply
☑ Terminal Disclaimer Form
☐ Additional sheets containing statements establishing unintentional delay
☐ Other: _____

CERTIFICATE OF MAILING OR TRANSMISSION [37 CFR 1.8(a)]

I hereby certify that this correspondence is being:

☐ Deposited with the United States Postal Service on the date shown below with sufficient postage as first class mail in an envelope addressed to: Mail Stop Petition, Commissioner for Patents, P. O. Box 1450, Alexandria, VA 22313-1450.

☒ Transmitted by facsimile on the date shown below to the United States Patent and Trademark Office at (571) 273-8300.

May 7, 2008 Date

_____ Signature

Victoria T. Carusone Typed or printed name of person signing certificate

UNITED STATES PATENT AND TRADEMARK OFFICE

Commissioner for Patents
United States Patent and Trademark Office
P.O. Box 1450
Alexandria, VA 22313-1450

COPY MAILED

SEP 20 2007

OFFICE OF PETITIONS

HOVEY WILLIAMS LLP
2405 GRAND BLVD., SUITE 400
KANSAS CITY MO 64108

In re Application of :
Vondie L. FLETCHER et al. :
Application No. 29/249,868 : DECISION ON PETITION
Filed: October 24, 2006 :
Attorney Docket No. **37565-DSG** :

This is a decision on the petition under 37 CFR 1.137(b), filed July 31, 2007, to revive the above-identified design application.

The petition is **GRANTED**.

The application became abandoned for failure to correct drawings request in a timely manner in reply to the Notice of Allowability, mailed March 09, 2007, which set a period for reply of three (3) months. Accordingly, this application became abandoned on June 10, 2007.

The petition satisfies the requirements of 37 CFR 1.137(b) in that petitioner has supplied (1) the reply in the form of corrected drawings, (2) the petition fee of $750, (3) a proper statement of unintentional delay, and (4) a terminal disclaimer and fee as required by 37 CFR 1.137(d).

The terminal disclaimer is accepted and has been made of record. Any continuing application filed from this application must contain a copy of the terminal disclaimer. The copy of the terminal disclaimer must be filed with a cover letter requesting the terminal disclaimer be recorded on the continuing application. A copy of this decision should be attached to the cover letter.

The terminal disclaimer fee ($65) has been charged to the authorized deposit account.

Telephone inquiries concerning this decision should be directed to Tredelle Jackson at (571) 272-2783.

This application is being referred to Publishing Division for further processing in accordance with this decision on petition.

Denise Pothier
Petitions Examiner
Office of Petitions

UNITED STATES PATENT AND TRADEMARK OFFICE

Commissioner for Patents
United States Patent and Trademark Office
P.O. Box 1450
Alexandria, VA 22313-1450
www.uspto.gov

Andrew N. Parfomak
Norris McLaughlin & Marcus, PA
18th Floor
875 Third Avenue
New York NY 10022

COPY MAILED

JUN 29 2007

OFFICE OF PETITIONS

In re Application of:	:	
Noel Francisco Eddy Lobo	:	DECISION DISMISSING
Application No. 29/249885	:	PETITION UNDER
Filing or 371(c) Date 10/25/2006	:	37 CFR 1.47(b)
Title of Invention:	:	
DISPENSER OVERCAP	:	

This Decision is in response to the Petition to Admit Oath & Declaration Pursuant to 37 CFR 1.47(a), 35 USC 118 (Joint inventor – Inventor Unavailable – "Cannot be Reached')", filed April 5, 2007. The petition is properly treated as a petition to allow a person to whom an inventor has assigned or agreed in writing to assign the invention, or who otherwise shows sufficient proprietary interest in the matter justifying such action, to make application on behalf of and as agent for all inventors. The petition is properly treated under 37 CFR 1.47(b)[1].

The petition is **dismissed as inappropriate**.

Rule 47 applicant is given TWO (2) MONTHS from the mailing date of this decision to reply, correcting the below-noted deficiencies. Any reply should be entitled "Request for Reconsideration of Petition Under [insert the applicable code section]"; should only address the deficiencies noted below, except that the reply may include an oath or declaration executed by the non-signing inventor. Failure to respond will result in abandonment of the application. Any extensions of time will be governed by 37 CFR 1.136(a).

The above identified application was filed as a Continued Prosecution Application ("CPA"), on April 5, 2007. With the CPA, Applicant has filed the present petition, and has also filed additional drawings not present in the prior application.

[1] A petition under 37 CFR 1.47(b) is appropriate when none of the inventors have executed the oath or declaration, and allows a person to whom an inventor has assigned or agreed in writing to assign the invention, or who otherwise shows sufficient proprietary interest in the matter justifying such action, to make application on behalf of and as agent for all inventors.

Applicable law, Rules and MPEP

37 CFR 1.53(d), Application number, filing date, and completion of application, states:

> Application filing requirements - Continued prosecution (nonprovisional) application .
>
> (5) Any new change must be made in the form of an amendment to the prior application as it existed prior to the filing of an application under this paragraph. No amendment in an application under this paragraph (a continued prosecution application) may introduce new matter or matter that would have been new matter in the prior application. Any new specification filed with the request for an application under this paragraph will not be considered part of the original application papers, but will be treated as a substitute specification in accordance with § 1.125.

The MPEP, 201.06(d)II, Filing and Initial Processing of CPAs for Design Applications, states:

> A. In General
> In addition to the provisions of 37 CFR 1.53(b), a continuation or divisional (but not a continuation-in-part) application may be filed under 37 CFR 1.53(d) if the prior application is a design application that is complete as defined by 37 CFR 1.51(b). A continuation or divisional application filed under 37 CFR 1.53(d) is called a "Continued Prosecution Application" or "CPA." (Emphasis supplied).
>
> Under the CPA procedure, the continuation or divisional application will utilize the file wrapper and contents of the prior nonprovisional application, including the specification, drawings and oath or declaration from the prior nonprovisional application, and will be assigned the same application number as the prior nonprovisional application. Any changes to the continuation or divisional application desired when filing the CPA must be made in the form of an amendment to the prior application as it existed prior to filing the CPA, see 37 CFR 1.53(d)(5). Any new specification filed with the CPA request will not be considered part of the original application papers, but will be treated as a substitute specification in accordance with 37 CFR 1.125. However, the applicant must comply with the requirements of 37 CFR 1.125(b) before the substitute specification will be entered into the CPA. Since 37 CFR 1.125(b) requires that a substitute specification be accompanied by, *inter alia*, a statement that the substitute specification includes no new matter, any substitute specification containing new matter will be denied entry by the examiner. Any preliminary amendment to the written description and claims, other than a substitute specification, filed with a CPA request will ordinarily be entered. Any new matter which is entered, however, will be required to be canceled pursuant to 35 U.S.C. 132 from the descriptive portion of the specification. Further, any claim(s) which relies upon such new matter for support will be rejected under 35 U.S.C. 112, first paragraph. See MPEP § 2163.06. In the event that a substitute specification or preliminary amendment containing new matter was filed with a request for a CPA, applicant may file a petition under 37 CFR 1.182 requesting that the substitute specification or preliminary

amendment be removed from the CPA application file, and be accorded the status as a separate application by being placed in a new file wrapper and assigned a new application number, with the new application being accorded a filing date as of the date the request for a CPA and substitute specification/preliminary amendment were filed. Of course, a request for a CPA is not improper simply because the request is accompanied by a substitute specification or preliminary amendment containing new matter. Thus, an applicant will not be entitled to a refund of the filing fee paid in a proper CPA as a result of the granting of a petition under 37 CFR 1.182 requesting that the substitute specification or preliminary amendment be removed from the CPA application file.

37 CFR 1.63(d) provides:

(1) A newly executed oath or declaration is not required under § 1.51(b)(2) and § 1.53(f) in a continuation or divisional application, provided that:
(i) The prior nonprovisional application contained an oath or declaration as prescribed by paragraphs (a) through (c) of this section;
(ii) The continuation or divisional application was filed by all or by fewer than all of the inventors named in the prior application;
(iii) The specification and drawings filed in the continuation or divisional application contain no matter that would have been new matter in the prior application; and
(iv) A copy of the executed oath or declaration filed in the prior application, showing the signature or an indication thereon that it was signed, is submitted for the continuation or divisional application.

Analysis

Petition Under 37 CFR 1.47(b)

Applicant has filed the present petition under 37 CFR 1.47(b) asserting that the inventor refuses, or cannot be found or reached, to execute the oath/declaration to execute the Continued Prosecution Application ("CPA"). However, A CPA is a continuation or divisional application filed under 37 CFR 1.53(d). By definition, a CPA may not contain new matter. 37 CFR 1.63(d) provides that a newly executed oath/declaration is not required. See, 37 CFR 1.63 above.

Accordingly, the petition under 37 CFR 1.47(b) is dismissed.

Additional drawings (new matter)

Applicant has filed additional drawing sheets not present in the prior application. As provided in MPEP 201.06, any new matter which is entered, will be required to be canceled pursuant to 35 U.S.C. 132 from the descriptive portion of the specification. Further, any claim(s) which relies upon such new matter for support will be rejected under 35 U.S.C. 112, first paragraph. See MPEP § 2163.06.

Applicant's option

As stated in the MPEP, applicant could have filed a petition under 37 CFR 1.182 requesting that the substitute specification or preliminary amendment be removed from the CPA application file, and be accorded the status as a separate application by being placed in a new file wrapper and assigned a new application number, with the new application being accorded a filing date as of the date the request for a CPA and substitute specification/preliminary amendment were filed.

However, the MPEP firther states that if the request for CPA has been entered, the petition will be denied. The MPEP states:

> If applicant wants the USPTO to disregard a previously filed request for a CPA (and not recognize its inherent request to expressly abandon the prior application) and to treat the paper as the filing of an application under 37 CFR 1.53(b), the applicant must file a petition under 37 CFR 1.182. A request to expressly abandon an application is not effective until the abandonment is acknowledged, including the express abandonment of the prior application of a CPA that occurs by operation of 37 CFR 1.53(d)(2)(v). The express abandonment of the prior application is acknowledged and becomes effective upon processing and entry of the CPA into the file of the prior application. Thus, such a petition under 37 CFR 1.182 should be filed expeditiously since the petition will not be granted once the request for a CPA has been entered into the prior application (and the inherent request to expressly abandon the prior application has been acknowledged). If the request for a CPA has been entered into the prior application by the time the petition under 37 CFR 1.182 and the application file are before the deciding official for a decision on the petition, the petition will be denied. **It is noted, however, that if the applicant intended to file a second application (either a continuation or a divisional) without abandoning the prior application, applicant can still achieve that result without loss of the benefit of the original filing date by: (A) continuing the prosecution of the original application via the CPA; and (B) filing a new continuation/divisional under 37 CFR 1.53(b) claiming benefit of the CPA and its parent applications under 35 U.S.C. 120 during the pendency of the CPA.**

MPEP 201.06(d).

Here, since the CPA has been entered into the prior application, Applicant must 1) continue prosecution of the original application, and 2) file a new continuation/divisional under 37 CFR 1.53(b) claiming benefit of the CPA and its parent applications under 35 U.S.C. 120 during the pendency of the CPA.

Conclusion

Applicant may continue prosecution of the original application, and file a new continuation/divisional under 37 CFR 1.53(b) claiming benefit of the CPA and its parent application(s) under 35 U.S.C. 120 during the pendency of the CPA.

Further correspondence with respect to this matter should be addressed as follows:

By mail:	Commissioner for Patents PO Box 1450 Alexandria, VA 22313-1450
By FAX:	(571) 273-8300 Attn: Office of Petitions
By hand:	Customer Service Window Randolph Building 401 Dulany Street Alexandria, VA 22314

Telephone inquiries concerning this matter should be directed to the undersigned at (571) 272-3232.

Derek L. Woods
Attorney
Office of Petitions

UNITED STATES PATENT AND TRADEMARK OFFICE

Commissioner for Patents
United States Patent and Trademark Office
P.O. Box 1450
Alexandria, VA 22313-1450
www.uspto.gov

Andrew N. Parfomak
Norris McLaughlin & Marcus, PA
18th Floor
875 Third Avenue
New York NY 10022

COPY MAILED

OCT 15 2007

OFFICE OF PETITIONS

In re Application of:	:	
Noel Francisco Eddy Lobo	:	DECISION DISMISSING
Application No. 29/249885	:	PETITION UNDER
Filing or 371(c) Date 10/25/2006	:	37 CFR 1.47(b)
Title of Invention:	:	
DISPENSER OVERCAP	:	

This Decision is in response to the Request for Reconsideration of Petition Under 37 CFR 1.47(b), filed August 10, 2007. The petition is properly treated under 37 CFR 1.183, to waive the requirement under 37 CFR 1.67 that all of the inventors sign a supplemental declaration.

The petition is **dismissed**.

Rule 47 applicant is given TWO (2) MONTHS from the mailing date of this decision to reply, correcting the below-noted deficiencies. Any reply should be entitled "Request for Reconsideration of Petition Under [insert the applicable code section]"; should only address the deficiencies noted below, except that the reply may include an oath or declaration executed by the non-signing inventor. Failure to respond will result in abandonment of the application. Any extensions of time will be governed by 37 CFR 1.136(a).

Background

A Notice of Allowance and issue Fee Due and Notice of Allowability were mailed in the above-identified application on January 10, 2007. The Notice of Allowability required a new oath or declaration in compliance with 37 CFR 1.67(a).

Applicant filed a Continued Prosecution Application ("CPA"), on April 5, 2007, and filed additional drawings not present in the prior application. Applicant also filed a petition which included the Declaration of Claire Todd, wherein Ms. Todd detailed he unsuccessful attempts to locate the nonsigning inventor's current address. Ms. Todd states, *inter alia*, that she telephoned International Directory Enquiries and was advised that no telephone number was available for the nonsigning inventor at the last known address. No proof of proprietary interest was filed

The June 29, 2007 Decision dismissing the petition

A Decision dismissing the petition was mailed June 29, 2007. The Decision noted that Applicant had filed additional drawing sheets not present in the prior application. A CPA is a continuation or divisional application filed under 37 CFR 1.53(d). By definition, a CPA may not contain new matter. 37 CFR 1.63(d) provides that a newly executed oath/declaration is not required. See, 37 CFR 1.63 above.

The present Request for Reconsideration of Petition

Applicant files the present Request for Reconsideration and provides, in relevant part, that the drawings were not new matter, but were copies of letters and applications sent unsuccessfully to the inventor, which also included copies of a related application.

Applicable Law, rules and MPEP

37 CFR 1.67 states, in pertinent part:

> (a) The Office may require, or inventors and applicants may submit, a supplemental oath or declaration meeting the requirements of §1.63 or § 1.162 to correct any deficiencies or inaccuracies present in the earlier filed oath or declaration.
>
> > (1) Deficiencies or inaccuracies relating to all the inventors or applicants (§§ 1.42, 1.43, or § 1.47) may be corrected with a supplemental oath or declaration signed by all the inventors or applicants.

Suspension of the rules under 37 CFR 1.183 may be granted in an "extraordinary situation, when justice requires." The facts presented on the record do not adequately establish an extraordinary situation. Petitioner has not sufficiently established any special circumstances of equities that would require suspension of the rules in the interests of justice.

Analysis

There is no requirement for a showing under 37 CFR 1.47, as noted above. This application bears an original Declaration executed by all joint inventors, and thus, the provisions of 37 CFR 1.47 do not apply in this instance. Nevertheless, it is appropriate to apply the principles thereof to the situation at hand; in order to determine whether an "extraordinary situation, when justice requires," the requirements for a petition to allow a person to whom an inventor has assigned or agreed in writing to assign the invention, or who otherwise shows sufficient proprietary interest in the matter justifying such action, to make application on behalf of and as agent for all inventors, has been met.

Applicable Law

A grantable petition under 37 CFR 1.47(b) requires: (1) proof that the non-signing inventor cannot be reached or refuses to sign the oath or declaration after having been presented with the application papers (specification, claims and drawings); (2) an acceptable oath or declaration in

compliance with 35 U.S.C. §§ 115 and 116; (3) the petition fee; (4) a statement of the last known address of the non-signing inventor(s); (5) proof of proprietary interest; and (6) proof of irreparable harm. Applicant lacks items (1), (2) and (5) as set forth above.

As to item (1), applicant is advised that, where an inventor is unavailable (cannot be reached), Petitioner must establish the exercise of diligent effort in trying to find or reach the nonsigning inventor. Where inability to find or reach a nonsigning inventor "after diligent effort" is the reason for filing under 37 CFR 1.47, a statement of facts should be submitted that fully describes the exact facts which are relied on to establish that a diligent effort was made. The statement of facts must be signed, where at all possible, by a person having firsthand knowledge of the facts recited therein. Statements based on hearsay will not normally be accepted. Copies of documentary evidence such as internet searches, certified mail return receipts, cover letters of instructions, telegrams, that support a finding that the nonsigning inventor could not be found or reached should be made part of the statement. The steps taken to locate the whereabouts of the nonsigning inventor should be included in the statement of facts. It is important that the statement contain facts as opposed to conclusions. *See*, MPEP § 409.03(d). (Emphasis supplied).

As to item (2), the oath/declaration is unexecuted.

The MPEP provides the following:

> The 37 CFR 1.47(b) applicant must make the oath required by 37 CFR 1.63 and 1.64 or 1.175. Where a corporation is the 37 CFR 1.47(b) applicant, an officer (President, Vice-President, Secretary, Treasurer, or Chief Executive Officer) thereof should normally sign the necessary oath or declaration. A corporation may authorize any person, including an attorney or agent registered to practice before the U.S. Patent and Trademark Office, to sign the application oath or declaration on its behalf. Where an oath or declaration is signed by a registered attorney or agent on behalf of a corporation, either proof of the attorney's or agent's authority in the form of a statement signed by an appropriate corporate officer must be submitted, or the attorney or agent may simply state that he or she is authorized to sign on behalf of the corporation. Where the oath or declaration is being signed on behalf of an assignee, see MPEP § 324. An inventor may not authorize another individual to act as his or her agent to sign the application oath or declaration on his or her behalf. Staeger v. Commissioner, 189 USPQ 272 (D.D.C. 1976), In re Striker, 182 USPQ 507 (Comm'r Pat. 1973). Where an application is executed by one other than the inventor, the declaration required by 37 CFR 1.63 must state the full name, residence, post office address, and citizenship of the nonsigning inventor. Also, the title or position of the person signing must be stated if signing on behalf of a corporation under 37 CFR 1.47(b). (Emphasis supplied).

An oath or declaration that lists the full name, residence, post office address, and citizenship of the nonsigning inventor; is executed by a person with the authority to do so, and includes the title or position of the person signing, is required.

As to item (5), Applicant failed to show or provide proof that anyone other than the inventor(s), has sufficient proprietary interest in the subject matter to justify the filing of the application (*see* MPEP 409.03(f)). Acceptable proof would include a copy of an (executed) assignment of the invention by the inventor to the Rule 47(b) applicant; a copy of proof (an employment agreement) that the inventor has agreed in writing to assign the invention to the applicant, or a legal memorandum signed by an attorney familiar with the law of the jurisdiction stating that a court of competent jurisdiction would by the weight of authority in that jurisdiction award the title of the invention to the Rule 47(b) applicant.

> When an application is deposited pursuant to 37 CFR 1.47(b), the 37 CFR 1.47(b) applicant must prove that
> (A) the invention has been assigned to the applicant, or
> (B) the inventor has agreed in writing to assign the invention to the applicant, or
> (C) the applicant otherwise has sufficient proprietary interest in the subject matter
>
> to justify the filing of the application. (Emphasis supplied).
>
> If the application has been assigned, a copy of the assignment (in the English language) must be submitted. The assignment must clearly indicate that the invention described in the 37 CFR 1.47(b) application was assigned to the 37 CFR 1.47(b) applicant. A statement under 37 CFR 3.73(b) by the assignee must also be submitted (see MPEP § 324). An assignment of an application and any "reissue, division, or continuation of said application" does not itself establish an assignment of a continuation-in-part application. In re Gray, 115 USPQ 80 (Comm'r Pat. 1956). An assignment to a 37 CFR 1.47(b) applicant for the sole purpose of obtaining a filing date for a 37 CFR 1.47(b) application is not considered an assignment within the meaning of 35 U.S.C. 118 and 37 CFR 1.47(b).
>
> When an inventor has agreed in writing to assign an invention described in an application deposited pursuant to 37 CFR 1.47(b), a copy of that agreement should be submitted. If an agreement to assign is dependent on certain specified conditions being met, it must be established by a statement of facts by someone with first hand knowledge of the circumstances in which those conditions have been met. A typical agreement to assign is an employment agreement where an employee (nonsigning inventor) agrees to assign to his or her employer (37 CFR 1.47(b) applicant) all inventions made during employment. When such an agreement is relied on, it must be established by a statement of a person having firsthand knowledge of the facts that the invention was made by the employee while employed by the 37 CFR 1.47(b) applicant.
>
> If the invention has not been assigned, or if there is no written agreement to assign, the 37 CFR 1.47(b) applicant must demonstrate that he or she otherwise has a sufficient proprietary interest in the matter.
>
> A proprietary interest obtained other than by assignment or agreement to assign may be demonstrated by an appropriate legal memorandum to the effect that a court of competent jurisdiction (federal, state, or foreign) would by the weight of authority in that

> jurisdiction award title of the invention to the 37 CFR 1.47(b) applicant. The facts in support of any conclusion that a court would award title to the 37 CFR 1.47(b) applicant should be made of record by way of an affidavit or declaration of the person having firsthand knowledge of same. The legal memorandum should be prepared and signed by an attorney at law familiar with the law of the jurisdiction involved. A copy (in the English language) of a statute (if other than the United States statute) or a court decision (if other than a reported decision of a federal court or a decision reported in the United States Patents Quarterly) relied on to demonstrate a proprietary interest should be made of record. (Emphasis supplied).

MPEP 409.03(f).

Absent a copy of an assignment, or a copy of proof that the inventor has agreed in writing to assign the invention to the applicant, Applicant must provide a legal memorandum signed by an attorney familiar with the law of the jurisdiction stating that a court of competent jurisdiction would by the weight of authority in that jurisdiction award the title of the invention to the Rule 47(b) applicant.

In order to demonstrate that this is an extraordinary situation requiring waiver of the rules, Applicant must demonstrate that the nonsigning inventor is unavailable under the provisions of 37 CFR 1.47(b).

Further correspondence with respect to this matter should be addressed as follows:

By mail:	Mail Stop PETITIONS Director for Patents PO Box 1450 Alexandria, VA 22313-1450
By FAX:	(571) 273-8300 Attn: Office of Petitions
By hand:	Customer Service Window Randolph Building 401 Dulany Street Alexandria, VA 22314

Telephone inquiries concerning this matter should be directed to the undersigned at (571) 272-3232.

Derek L. Woods
Attorney
Office of Petitions

UNITED STATES PATENT AND TRADEMARK OFFICE

Commissioner for Patents
United States Patent and Trademark Office
P.O. Box 1450
Alexandria, VA 22313-1450
www.uspto.gov

Andrew N. Parfomak
Norris McLaughlin & Marcus, PA
18th Floor
875 Third Avenue
New York NY 10022

COPY MAILED

FEB 13 2008

OFFICE OF PETITIONS

In re Application of:	:	
Noel Francisco Eddy Lobo	:	DECISION GRANTING
Application No. 29/249885	:	PETITION UNDER
Filing or 371(c) Date 10/25/2006	:	37 CFR 1.183
Title of Invention:	:	
DISPENSER OVERCAP	:	

This Decision is in response to the Request for Reconsideration of Petition Under 37 CFR 1.47(b), filed December 17, 2007. The petition is properly treated under 37 CFR 1.183, to waive the requirement under 37 CFR 1.67 that all of the inventors sign a supplemental declaration.

The petition is **granted**.

Background

A Notice of Allowance and issue Fee Due and Notice of Allowability were mailed in the above-identified application on January 10, 2007. The Notice of Allowability required a new oath or declaration in compliance with 37 CFR 1.67(a).

Applicant filed a Continued Prosecution Application ("CPA"), on April 5, 2007, and filed additional drawings not present in the prior application. Applicant also filed a petition which included the Declaration of Claire Todd, wherein Ms. Todd detailed he unsuccessful attempts to locate the nonsigning inventor's current address. Ms. Todd states, *inter alia*, that she telephoned International Directory Enquiries and was advised that no telephone number was available for the nonsigning inventor at the last known address. No proof of proprietary interest was filed

The June 29, 2007 Decision dismissing the petition

A Decision dismissing the petition was mailed June 29, 2007. The Decision noted that Applicant had filed additional drawing sheets not present in the prior application. A CPA is a continuation or divisional application filed under 37 CFR 1.53(d). By definition, a CPA may not contain new matter. 37 CFR 1.63(d) provides that a newly executed oath/declaration is not required. See, 37 CFR 1.63 above.

The August 10, 2007 Request for Reconsideration of Petition

Applicant files the present Request for Reconsideration and provides, in relevant part, that the drawings were not new matter, but were copies of letters and applications sent unsuccessfully to the inventor, which also included copies of a related application.

The petition was dismissed in a Decision mailed October 15, 2007. The Decision dismissing the petition noted that there is no requirement for a showing under 37 CFR 1.47 because the application bears an original Declaration executed by all joint inventors, and thus, the provisions of 37 CFR 1.47 do not apply in this instance. However, the Decision noted that it is nevertheless appropriate to apply the principles of 37 CFR 1.47 to the present petition; in order to determine whether an "extraordinary situation, when justice requires," exists.

The requirements for a grantable petition under 37 CFR 1.47(b) are: (1) proof that the non-signing inventor cannot be reached or refuses to sign the oath or declaration after having been presented with the application papers (specification, claims and drawings); (2) an acceptable oath or declaration in compliance with 35 U.S.C. §§ 115 and 116; (3) the petition fee; (4) a statement of the last known address of the non-signing inventor(s); (5) proof of proprietary interest; and (6) proof of irreparable harm.

Applicant lacked items (1), (2) and (5) as set forth above. The petition was dismissed.

The present Request for Reconsideration of Petition

Petitioner files the present request for reconsideration and includes 1) proof that the non-signing inventor cannot be reached or refuses to sign the oath or declaration after having been presented with the application papers (specification, claims and drawings); (2) an acceptable oath or declaration in compliance with 35 U.S.C. §§ 115 and 116; (5) proof of proprietary interest.

Applicable Law, rules and MPEP

37 CFR 1.67 states, in pertinent part:

> (a) The Office may require, or inventors and applicants may submit, a supplemental oath or declaration meeting the requirements of §1.63 or § 1.162 to correct any deficiencies or inaccuracies present in the earlier filed oath or declaration.
>
> > (1) Deficiencies or inaccuracies relating to all the inventors or applicants (§§ 1.42, 1.43, or § 1.47) may be corrected with a supplemental oath or declaration signed by all the inventors or applicants.

Analysis and conclusion

With the present petition, Applicant has set forth the steps taken to secure inventor Noel Francisco Eddy Lobo's signature on the supplemental declaration. Applicant has demonstrated that a *bona fide* effort was made to secure inventor Noel Francisco Eddy Lobo's signature on the

supplemental declaration. Accordingly, it is concluded that petitioner has demonstrated that this is an extraordinary situation, requiring waiver of the rules.

The newly executed declaration, filed on December 17, 2007, will be entered, despite the fact that the requirement set forth in 37 CFR 1.67(a)(1) that all the inventors sign a supplemental oath or declaration has not been satisfied.

The application file is being referred to Publishing Division for processing into a patent.

Telephone inquiries concerning this matter should be directed to the undersigned at (571) 272-3232.

Derek L. Woods
Attorney
Office of Petitions