UNITED STATES PATENT AND TRADEMARK OFFICE

Commissioner for Patents
United States Patent and Trademark Office
P.O. Box 1450
Alexandria, VA 22313-1450
www.uspto.gov

Andrew N. Parfomak
Norris McLaughlin & Marcus, PA
18th Floor
875 Third Avenue
New York NY 10022

COPY MAILED

JUN 29 2007

OFFICE OF PETITIONS

In re Application of:	:	
Noel Francisco Eddy Lobo	:	DECISION DISMISSING
Application No. 29/249887	:	PETITION UNDER
Filing or 371(c) Date 10/25/2006	:	37 CFR 1.47(b)
Title of Invention:	:	
BOTTLE AND CAP	:	

This Decision is in response to the Petition to Admit Oath & Declaration Pursuant to 37 CFR 1.47(a), 35 USC 118 (Joint inventor – Inventor Unavailable – "Cannot be Reached')", filed April 5, 2007. The petition is properly treated as a petition to allow a person to whom an inventor has assigned or agreed in writing to assign the invention, or who otherwise shows sufficient proprietary interest in the matter justifying such action, to make application on behalf of and as agent for all inventors. The petition is properly treated under 37 CFR 1.47(b)[1].

The petition is **dismissed as inappropriate**.

Rule 47 applicant is given TWO (2) MONTHS from the mailing date of this decision to reply, correcting the below-noted deficiencies. Any reply should be entitled "Request for Reconsideration of Petition Under [insert the applicable code section]"; should only address the deficiencies noted below, except that the reply may include an oath or declaration executed by the non-signing inventor. Failure to respond will result in abandonment of the application. Any extensions of time will be governed by 37 CFR 1.136(a).

The above identified application was filed as a Continued Prosecution Application ("CPA"), on April 5, 2007. With the CPA, Applicant has filed the present petition, and has also filed additional drawings not present in the prior application.

[1] A petition under 37 CFR 1.47(b) is appropriate when none of the inventors have executed the oath or declaration, and allows a person to whom an inventor has assigned or agreed in writing to assign the invention, or who otherwise shows sufficient proprietary interest in the matter justifying such action, to make application on behalf of and as agent for all inventors.

Applicable law, Rules and MPEP

37 CFR 1.53(d), Application number, filing date, and completion of application, states:

> Application filing requirements - Continued prosecution (nonprovisional) application .
>
> (5) Any new change must be made in the form of an amendment to the prior application as it existed prior to the filing of an application under this paragraph. No amendment in an application under this paragraph (a continued prosecution application) may introduce new matter or matter that would have been new matter in the prior application. Any new specification filed with the request for an application under this paragraph will not be considered part of the original application papers, but will be treated as a substitute specification in accordance with § 1.125.

The MPEP, 201.06(d)II, Filing and Initial Processing of CPAs for Design Applications, states:

> A. In General
> In addition to the provisions of 37 CFR 1.53(b), a continuation or divisional (but not a continuation-in-part) application may be filed under 37 CFR 1.53(d) if the prior application is a design application that is complete as defined by 37 CFR 1.51(b). A continuation or divisional application filed under 37 CFR 1.53(d) is called a "Continued Prosecution Application" or "CPA." (Emphasis supplied).
>
> Under the CPA procedure, the continuation or divisional application will utilize the file wrapper and contents of the prior nonprovisional application, including the specification, drawings and oath or declaration from the prior nonprovisional application, and will be assigned the same application number as the prior nonprovisional application. Any changes to the continuation or divisional application desired when filing the CPA must be made in the form of an amendment to the prior application as it existed prior to filing the CPA, see 37 CFR 1.53(d)(5). Any new specification filed with the CPA request will not be considered part of the original application papers, but will be treated as a substitute specification in accordance with 37 CFR 1.125. However, the applicant must comply with the requirements of 37 CFR 1.125(b) before the substitute specification will be entered into the CPA. Since 37 CFR 1.125(b) requires that a substitute specification be accompanied by, *inter alia*, a statement that the substitute specification includes no new matter, any substitute specification containing new matter will be denied entry by the examiner. Any preliminary amendment to the written description and claims, other than a substitute specification, filed with a CPA request will ordinarily be entered. Any new matter which is entered, however, will be required to be canceled pursuant to 35 U.S.C. 132 from the descriptive portion of the specification. Further, any claim(s) which relies upon such new matter for support will be rejected under 35 U.S.C. 112, first paragraph. See MPEP § 2163.06. In the event that a substitute specification or preliminary amendment containing new matter was filed with a request for a CPA, applicant may file a petition under 37 CFR 1.182 requesting that the substitute specification or preliminary

> amendment be removed from the CPA application file, and be accorded the status as a separate application by being placed in a new file wrapper and assigned a new application number, with the new application being accorded a filing date as of the date the request for a CPA and substitute specification/preliminary amendment were filed. Of course, a request for a CPA is not improper simply because the request is accompanied by a substitute specification or preliminary amendment containing new matter. Thus, an applicant will not be entitled to a refund of the filing fee paid in a proper CPA as a result of the granting of a petition under 37 CFR 1.182 requesting that the substitute specification or preliminary amendment be removed from the CPA application file.

37 CFR 1.63(d) provides:

> (1) A newly executed oath or declaration is not required under § 1.51(b)(2) and § 1.53(f) in a continuation or divisional application, provided that:
> (i) The prior nonprovisional application contained an oath or declaration as prescribed by paragraphs (a) through (c) of this section;
> (ii) The continuation or divisional application was filed by all or by fewer than all of the inventors named in the prior application;
> (iii) The specification and drawings filed in the continuation or divisional application contain no matter that would have been new matter in the prior application; and
> (iv) A copy of the executed oath or declaration filed in the prior application, showing the signature or an indication thereon that it was signed, is submitted for the continuation or divisional application.

Analysis

Petition Under 37 CFR 1.47(b)

Applicant has filed the present petition under 37 CFR 1.47(b) asserting that the inventor refuses, or cannot be found or reached, to execute the oath/declaration to execute the Continued Prosecution Application ("CPA"). However, A CPA is a continuation or divisional application filed under 37 CFR 1.53(d). By definition, a CPA may not contain new matter. 37 CFR 1.63(d) provides that a newly executed oath/declaration is not required. See, 37 CFR 1.63 above.

Accordingly, the petition under 37 CFR 1.47(b) is dismissed.

Additional drawings (new matter)

Applicant has filed additional drawing sheets not present in the prior application. As provided in MPEP 201.06, any new matter which is entered, will be required to be canceled pursuant to 35 U.S.C. 132 from the descriptive portion of the specification. Further, any claim(s) which relies upon such new matter for support will be rejected under 35 U.S.C. 112, first paragraph. See MPEP § 2163.06.

Applicant's option

As stated in the MPEP, applicant could have filed a petition under 37 CFR 1.182 requesting that the substitute specification or preliminary amendment be removed from the CPA application file, and be accorded the status as a separate application by being placed in a new file wrapper and assigned a new application number, with the new application being accorded a filing date as of the date the request for a CPA and substitute specification/preliminary amendment were filed.

However, the MPEP firther states that if the request for CPA has been entered, the petition will be denied. The MPEP states:

> If applicant wants the USPTO to disregard a previously filed request for a CPA (and not recognize its inherent request to expressly abandon the prior application) and to treat the paper as the filing of an application under 37 CFR 1.53(b), the applicant must file a petition under 37 CFR 1.182. A request to expressly abandon an application is not effective until the abandonment is acknowledged, including the express abandonment of the prior application of a CPA that occurs by operation of 37 CFR 1.53(d)(2)(v). The express abandonment of the prior application is acknowledged and becomes effective upon processing and entry of the CPA into the file of the prior application. Thus, such a petition under 37 CFR 1.182 should be filed expeditiously since the petition will not be granted once the request for a CPA has been entered into the prior application (and the inherent request to expressly abandon the prior application has been acknowledged). If the request for a CPA has been entered into the prior application by the time the petition under 37 CFR 1.182 and the application file are before the deciding official for a decision on the petition, the petition will be denied. **It is noted, however, that if the applicant intended to file a second application (either a continuation or a divisional) without abandoning the prior application, applicant can still achieve that result without loss of the benefit of the original filing date by: (A) continuing the prosecution of the original application via the CPA; and (B) filing a new continuation/divisional under 37 CFR 1.53(b) claiming benefit of the CPA and its parent applications under 35 U.S.C. 120 during the pendency of the CPA.**

MPEP 201.06(d).

Here, since the CPA has been entered into the prior application, Applicant must 1) continue prosecution of the original application, and 2) file a new continuation/divisional under 37 CFR 1.53(b) claiming benefit of the CPA and its parent applications under 35 U.S.C. 120 during the pendency of the CPA.

Conclusion

Applicant may continue prosecution of the original application, and file a new continuation/divisional under 37 CFR 1.53(b) claiming benefit of the CPA and its parent application(s) under 35 U.S.C. 120 during the pendency of the CPA.

Further correspondence with respect to this matter should be addressed as follows:

By mail: Commissioner for Patents
PO Box 1450
Alexandria, VA 22313-1450

By FAX: (571) 273-8300
Attn: Office of Petitions

By hand: Customer Service Window
Randolph Building
401 Dulany Street
Alexandria, VA 22314

Telephone inquiries concerning this matter should be directed to the undersigned at (571) 272-3232.

Derek L. Woods
Attorney
Office of Petitions

UNITED STATES PATENT AND TRADEMARK OFFICE

Commissioner for Patents
United States Patent and Trademark Office
P.O. Box 1450
Alexandria, VA 22313-1450
www.uspto.gov

Andrew N. Parfomak
Norris McLaughlin & Marcus, PA
18th Floor
875 Third Avenue
New York NY 10022

COPY MAILED

OCT 15 2007

OFFICE OF PETITIONS

In re Application of:	:	
Noel Francisco Eddy Lobo	:	DECISION DISMISSING
Application No. 29/249887	:	PETITION UNDER
Filing or 371(c) Date 10/25/2006	:	37 CFR 1.47(b)
Title of Invention:	:	
BOTTLE AND CAP	:	

This Decision is in response to the Request for Reconsideration of Petition Under 37 CFR 1.47(b), filed August 10, 2007. The petition is properly treated under 37 CFR 1.183, to waive the requirement under 37 CFR 1.67 that all of the inventors sign a supplemental declaration.

The petition is **dismissed**.

Rule 47 applicant is given TWO (2) MONTHS from the mailing date of this decision to reply, correcting the below-noted deficiencies. Any reply should be entitled "Request for Reconsideration of Petition Under [insert the applicable code section]"; should only address the deficiencies noted below, except that the reply may include an oath or declaration executed by the non-signing inventor. Failure to respond will result in abandonment of the application. Any extensions of time will be governed by 37 CFR 1.136(a).

Background

A Notice of Allowance and issue Fee Due and Notice of Allowability were mailed in the above-identified application on January 10, 2007. The Notice of Allowability required a new oath or declaration in compliance with 37 CFR 1.67(a).

Applicant filed a Continued Prosecution Application ("CPA"), on April 5, 2007, and filed additional drawings not present in the prior application. Applicant also filed a petition which included the Declaration of Claire Todd, wherein Ms. Todd detailed he unsuccessful attempts to locate the nonsigning inventor's current address. Ms. Todd states, *inter alia*, that she telephoned International Directory Enquiries and was advised that no telephone number was available for the nonsigning inventor at the last known address. No proof of proprietary interest was filed

The June 29, 2007 Decision dismissing the petition

A Decision dismissing the petition was mailed June 29, 2007. The Decision noted that Applicant had filed additional drawing sheets not present in the prior application. A CPA is a continuation or divisional application filed under 37 CFR 1.53(d). By definition, a CPA may not contain new matter. 37 CFR 1.63(d) provides that a newly executed oath/declaration is not required. See, 37 CFR 1.63 above.

The present Request for Reconsideration of Petition

Applicant files the present Request for Reconsideration and provides, in relevant part, that the drawings were not new matter, but were copies of letters and applications sent unsuccessfully to the inventor, which also included copies of a related application.

Applicable Law, rules and MPEP

37 CFR 1.67 states, in pertinent part:

> (a) The Office may require, or inventors and applicants may submit, a supplemental oath or declaration meeting the requirements of §1.63 or § 1.162 to correct any deficiencies or inaccuracies present in the earlier filed oath or declaration.
>
> > (1) Deficiencies or inaccuracies relating to all the inventors or applicants (§§ 1.42, 1.43, or § 1.47) may be corrected with a supplemental oath or declaration signed by all the inventors or applicants.

Suspension of the rules under 37 CFR 1.183 may be granted in an "extraordinary situation, when justice requires." The facts presented on the record do not adequately establish an extraordinary situation. Petitioner has not sufficiently established any special circumstances of equities that would require suspension of the rules in the interests of justice.

Analysis

There is no requirement for a showing under 37 CFR 1.47, as noted above. This application bears an original Declaration executed by all joint inventors, and thus, the provisions of 37 CFR 1.47 do not apply in this instance. Nevertheless, it is appropriate to apply the principles thereof to the situation at hand; in order to determine whether an "extraordinary situation, when justice requires," the requirements for a petition to allow a person to whom an inventor has assigned or agreed in writing to assign the invention, or who otherwise shows sufficient proprietary interest in the matter justifying such action, to make application on behalf of and as agent for all inventors, has been met.

Applicable Law

A grantable petition under 37 CFR 1.47(b) requires: (1) proof that the non-signing inventor cannot be reached or refuses to sign the oath or declaration after having been presented with the application papers (specification, claims and drawings); (2) an acceptable oath or declaration in

compliance with 35 U.S.C. §§ 115 and 116; (3) the petition fee; (4) a statement of the last known address of the non-signing inventor(s); (5) proof of proprietary interest; and (6) proof of irreparable harm. Applicant lacks items (1), (2) and (5) as set forth above.

As to item (1), applicant is advised that, where an inventor is unavailable (cannot be reached), Petitioner must establish the exercise of diligent effort in trying to find or reach the nonsigning inventor. Where inability to find or reach a nonsigning inventor "after diligent effort" is the reason for filing under 37 CFR 1.47, a statement of facts should be submitted that fully describes the exact facts which are relied on to establish that a diligent effort was made. The statement of facts must be signed, where at all possible, by a person having firsthand knowledge of the facts recited therein. Statements based on hearsay will not normally be accepted. Copies of documentary evidence such as internet searches, certified mail return receipts, cover letters of instructions, telegrams, that support a finding that the nonsigning inventor could not be found or reached should be made part of the statement. The steps taken to locate the whereabouts of the nonsigning inventor should be included in the statement of facts. It is important that the statement contain facts as opposed to conclusions. *See*, MPEP § 409.03(d). (Emphasis supplied).

As to item (2), the oath/declaration is unexecuted.

The MPEP provides the following:

> The 37 CFR 1.47(b) applicant must make the oath required by 37 CFR 1.63 and 1.64 or 1.175. Where a corporation is the 37 CFR 1.47(b) applicant, an officer (President, Vice-President, Secretary, Treasurer, or Chief Executive Officer) thereof should normally sign the necessary oath or declaration. A corporation may authorize any person, including an attorney or agent registered to practice before the U.S. Patent and Trademark Office, to sign the application oath or declaration on its behalf. Where an oath or declaration is signed by a registered attorney or agent on behalf of a corporation, either proof of the attorney's or agent's authority in the form of a statement signed by an appropriate corporate officer must be submitted, or the attorney or agent may simply state that he or she is authorized to sign on behalf of the corporation. Where the oath or declaration is being signed on behalf of an assignee, see MPEP § 324. An inventor may not authorize another individual to act as his or her agent to sign the application oath or declaration on his or her behalf. Staeger v. Commissioner, 189 USPQ 272 (D.D.C. 1976), In re Striker, 182 USPQ 507 (Comm'r Pat. 1973). Where an application is executed by one other than the inventor, the declaration required by 37 CFR 1.63 must state the full name, residence, post office address, and citizenship of the nonsigning inventor. Also, the title or position of the person signing must be stated if signing on behalf of a corporation under 37 CFR 1.47(b). (Emphasis supplied).

An oath or declaration that lists the full name, residence, post office address, and citizenship of the nonsigning inventor; is executed by a person with the authority to do so, and includes the title or position of the person signing, is required.

As to item (5), Applicant failed to show or provide proof that anyone other than the inventor(s), has sufficient proprietary interest in the subject matter to justify the filing of the application (*see* MPEP 409.03(f)). Acceptable proof would include a copy of an (executed) assignment of the invention by the inventor to the Rule 47(b) applicant; a copy of proof (an employment agreement) that the inventor has agreed in writing to assign the invention to the applicant, or a legal memorandum signed by an attorney familiar with the law of the jurisdiction stating that a court of competent jurisdiction would by the weight of authority in that jurisdiction award the title of the invention to the Rule 47(b) applicant.

> When an application is deposited pursuant to 37 CFR 1.47(b), the 37 CFR 1.47(b) applicant must prove that
> (A) the invention has been assigned to the applicant, or
> (B) the inventor has agreed in writing to assign the invention to the applicant, or
> (C) the applicant otherwise has sufficient proprietary interest in the subject matter
>
> to justify the filing of the application. (Emphasis supplied).
>
> If the application has been assigned, a copy of the assignment (in the English language) must be submitted. The assignment must clearly indicate that the invention described in the 37 CFR 1.47(b) application was assigned to the 37 CFR 1.47(b) applicant. A statement under 37 CFR 3.73(b) by the assignee must also be submitted (see MPEP § 324). An assignment of an application and any "reissue, division, or continuation of said application" does not itself establish an assignment of a continuation-in-part application. In re Gray, 115 USPQ 80 (Comm'r Pat. 1956). An assignment to a 37 CFR 1.47(b) applicant for the sole purpose of obtaining a filing date for a 37 CFR 1.47(b) application is not considered an assignment within the meaning of 35 U.S.C. 118 and 37 CFR 1.47(b).
>
> When an inventor has agreed in writing to assign an invention described in an application deposited pursuant to 37 CFR 1.47(b), a copy of that agreement should be submitted. If an agreement to assign is dependent on certain specified conditions being met, it must be established by a statement of facts by someone with first hand knowledge of the circumstances in which those conditions have been met. A typical agreement to assign is an employment agreement where an employee (nonsigning inventor) agrees to assign to his or her employer (37 CFR 1.47(b) applicant) all inventions made during employment. When such an agreement is relied on, it must be established by a statement of a person having firsthand knowledge of the facts that the invention was made by the employee while employed by the 37 CFR 1.47(b) applicant.
>
> If the invention has not been assigned, or if there is no written agreement to assign, the 37 CFR 1.47(b) applicant must demonstrate that he or she otherwise has a sufficient proprietary interest in the matter.
>
> A proprietary interest obtained other than by assignment or agreement to assign may be demonstrated by an appropriate legal memorandum to the effect that a court of competent jurisdiction (federal, state, or foreign) would by the weight of authority in that

> jurisdiction award title of the invention to the 37 CFR 1.47(b) applicant. The facts in support of any conclusion that a court would award title to the 37 CFR 1.47(b) applicant should be made of record by way of an affidavit or declaration of the person having firsthand knowledge of same. The legal memorandum should be prepared and signed by an attorney at law familiar with the law of the jurisdiction involved. A copy (in the English language) of a statute (if other than the United States statute) or a court decision (if other than a reported decision of a federal court or a decision reported in the United States Patents Quarterly) relied on to demonstrate a proprietary interest should be made of record. (Emphasis supplied).

MPEP 409.03(f).

Absent a copy of an assignment, or a copy of proof that the inventor has agreed in writing to assign the invention to the applicant, Applicant must provide a legal memorandum signed by an attorney familiar with the law of the jurisdiction stating that a court of competent jurisdiction would by the weight of authority in that jurisdiction award the title of the invention to the Rule 47(b) applicant.

In order to demonstrate that this is an extraordinary situation requiring waiver of the rules, Applicant must demonstrate that the nonsigning inventor is unavailable under the provisions of 37 CFR 1.47(b).

Further correspondence with respect to this matter should be addressed as follows:

By mail:	Mail Stop PETITIONS Director for Patents PO Box 1450 Alexandria, VA 22313-1450
By FAX:	(571) 273-8300 Attn: Office of Petitions
By hand:	Customer Service Window Randolph Building 401 Dulany Street Alexandria, VA 22314

Telephone inquiries concerning this matter should be directed to the undersigned at (571) 272-3232.

Derek L. Woods
Attorney
Office of Petitions

UNITED STATES PATENT AND TRADEMARK OFFICE

Commissioner for Patents
United States Patent and Trademark Office
P.O. Box 1450
Alexandria, VA 22313-1450
www.uspto.gov

Andrew N. Parfomak
Norris McLaughlin & Marcus, PA
18th Floor
875 Third Avenue
New York NY 10022

COPY MAILED

FEB 13 2008

OFFICE OF PETITIONS

In re Application of:	:	
Noel Francisco Eddy Lobo	:	DECISION GRANTING
Application No. 29/249887	:	PETITION UNDER
Filing or 371(c) Date 10/25/2006	:	37 CFR 1.183
Title of Invention:	:	
BOTTLE AND CAP	:	

This Decision is in response to the Request for Reconsideration of Petition Under 37 CFR 1.47(b), filed December 17, 2007. The petition is properly treated under 37 CFR 1.183, to waive the requirement under 37 CFR 1.67 that all of the inventors sign a supplemental declaration.

The petition is **granted**.

Background

A Notice of Allowance and issue Fee Due and Notice of Allowability were mailed in the above-identified application on January 10, 2007. The Notice of Allowability required a new oath or declaration in compliance with 37 CFR 1.67(a).

Applicant filed a Continued Prosecution Application ("CPA"), on April 5, 2007, and filed additional drawings not present in the prior application. Applicant also filed a petition which included the Declaration of Claire Todd, wherein Ms. Todd detailed he unsuccessful attempts to locate the nonsigning inventor's current address. Ms. Todd states, *inter alia*, that she telephoned International Directory Enquiries and was advised that no telephone number was available for the nonsigning inventor at the last known address. No proof of proprietary interest was filed

The June 29, 2007 Decision dismissing the petition

A Decision dismissing the petition was mailed June 29, 2007. The Decision noted that Applicant had filed additional drawing sheets not present in the prior application. A CPA is a continuation or divisional application filed under 37 CFR 1.53(d). By definition, a CPA may not contain new matter. 37 CFR 1.63(d) provides that a newly executed oath/declaration is not required. See, 37 CFR 1.63 above.

The August 10, 2007 Request for Reconsideration of Petition

Applicant files the present Request for Reconsideration and provides, in relevant part, that the drawings were not new matter, but were copies of letters and applications sent unsuccessfully to the inventor, which also included copies of a related application.

The petition was dismissed in a Decision mailed October 15, 2007. The Decision dismissing the petition noted that there is no requirement for a showing under 37 CFR 1.47 because the application bears an original Declaration executed by all joint inventors, and thus, the provisions of 37 CFR 1.47 do not apply in this instance. However, the Decision noted that it is nevertheless appropriate to apply the principles of 37 CFR 1.47 to the present petition; in order to determine whether an "extraordinary situation, when justice requires," exists.

The requirements for a grantable petition under 37 CFR 1.47(b) are: (1) proof that the non-signing inventor cannot be reached or refuses to sign the oath or declaration after having been presented with the application papers (specification, claims and drawings); (2) an acceptable oath or declaration in compliance with 35 U.S.C. §§ 115 and 116; (3) the petition fee; (4) a statement of the last known address of the non-signing inventor(s); (5) proof of proprietary interest; and (6) proof of irreparable harm.

Applicant lacked items (1), (2) and (5) as set forth above. The petition was dismissed.

The present Request for Reconsideration of Petition

Petitioner files the present request for reconsideration and includes 1) proof that the non-signing inventor cannot be reached or refuses to sign the oath or declaration after having been presented with the application papers (specification, claims and drawings); (2) an acceptable oath or declaration in compliance with 35 U.S.C. §§ 115 and 116; (5) proof of proprietary interest.

Applicable Law, rules and MPEP

37 CFR 1.67 states, in pertinent part:

> (a) The Office may require, or inventors and applicants may submit, a supplemental oath or declaration meeting the requirements of §1.63 or § 1.162 to correct any deficiencies or inaccuracies present in the earlier filed oath or declaration.
>
> > (1) Deficiencies or inaccuracies relating to all the inventors or applicants (§§ 1.42, 1.43, or § 1.47) may be corrected with a supplemental oath or declaration signed by all the inventors or applicants.

Analysis and conclusion

With the present petition, Applicant has set forth the steps taken to secure inventor Noel Francisco Eddy Lobo's signature on the supplemental declaration. Applicant has demonstrated that a *bona fide* effort was made to secure inventor Noel Francisco Eddy Lobo's signature on the

supplemental declaration. Accordingly, it is concluded that petitioner has demonstrated that this is an extraordinary situation, requiring waiver of the rules.

The newly executed declaration, filed on December 17, 2007, will be entered, despite the fact that the requirement set forth in 37 CFR 1.67(a)(1) that all the inventors sign a supplemental oath or declaration has not been satisfied.

The application file is being referred to Publishing Division for processing into a patent.

Telephone inquiries concerning this matter should be directed to the undersigned at (571) 272-3232.

Derek L. Woods
Attorney
Office of Petitions

UNITED STATES PATENT AND TRADEMARK OFFICE

Commissioner for Patents
United States Patent and Trademark Office
P.O. Box 1450
Alexandria, VA 22313-1450
www.uspto.gov

Andrew N. Parfomak
Norris McLaughlin & Marcus, PA
18th Floor
875 Third Avenue
New York NY 10022

COPY MAILED

JUN 20 2008

OFFICE OF PETITIONS

In re Application of:	:	CORRECTED[1]
Noel Francisco Eddy Lobo	:	DECISION GRANTING
Application No. 29/249887	:	PETITION UNDER
Filing or 371(c) Date 10/25/2006	:	37 CFR 1.183
Title of Invention:	:	
BOTTLE AND CAP	:	

This Decision is in response to the Request for Reconsideration of Petition Under 37 CFR 1.47(b), filed December 17, 2007. The petition is properly treated under 37 CFR 1.183, to waive the requirement under 37 CFR 1.67 that all of the inventors sign a supplemental declaration.

The petition is **granted**.

Background

A Notice of Allowance and issue Fee Due and Notice of Allowability were mailed in the above-identified application on January 10, 2007. The Notice of Allowability required a new oath or declaration in compliance with 37 CFR 1.67(a).

Applicant filed a Continued Prosecution Application ("CPA"), on April 5, 2007, and filed additional drawings not present in the prior application. Applicant also filed a petition which included the Declaration of Claire Todd, wherein Ms. Todd detailed he unsuccessful attempts to locate the nonsigning inventor's current address. Ms. Todd states, *inter alia*, that she telephoned International Directory Enquiries and was advised that no telephone number was available for the nonsigning inventor at the last known address. No proof of proprietary interest was filed

The June 29, 2007 Decision dismissing the petition

A Decision dismissing the petition was mailed June 29, 2007. The Decision noted that Applicant had filed additional drawing sheets not present in the prior application. A CPA is a continuation or divisional application filed under 37 CFR 1.53(d). By definition, a CPA may not contain new

[1] The correction is to route the application to the appropriate Technology Center Art Unit.

matter. 37 CFR 1.63(d) provides that a newly executed oath/declaration is not required. See, 37 CFR 1.63 above.

The August 10, 2007 Request for Reconsideration of Petition

Applicant files the present Request for Reconsideration and provides, in relevant part, that the drawings were not new matter, but were copies of letters and applications sent unsuccessfully to the inventor, which also included copies of a related application.

The petition was dismissed in a Decision mailed October 15, 2007. The Decision dismissing the petition noted that there is no requirement for a showing under 37 CFR 1.47 because the application bears an original Declaration executed by all joint inventors, and thus, the provisions of 37 CFR 1.47 do not apply in this instance. However, the Decision noted that it is nevertheless appropriate to apply the principles of 37 CFR 1.47 to the present petition; in order to determine whether an "extraordinary situation, when justice requires," exists.

The requirements for a grantable petition under 37 CFR 1.47(b) are: (1) proof that the non-signing inventor cannot be reached or refuses to sign the oath or declaration after having been presented with the application papers (specification, claims and drawings); (2) an acceptable oath or declaration in compliance with 35 U.S.C. §§ 115 and 116; (3) the petition fee; (4) a statement of the last known address of the non-signing inventor(s); (5) proof of proprietary interest; and (6) proof of irreparable harm.

Applicant lacked items (1), (2) and (5) as set forth above. The petition was dismissed.

The present Request for Reconsideration of Petition

Petitioner files the present request for reconsideration and includes 1) proof that the non-signing inventor cannot be reached or refuses to sign the oath or declaration after having been presented with the application papers (specification, claims and drawings); (2) an acceptable oath or declaration in compliance with 35 U.S.C. §§ 115 and 116; (5) proof of proprietary interest.

Applicable Law, rules and MPEP

37 CFR 1.67 states, in pertinent part:

> (a) The Office may require, or inventors and applicants may submit, a supplemental oath or declaration meeting the requirements of §1.63 or § 1.162 to correct any deficiencies or inaccuracies present in the earlier filed oath or declaration.
>
> > (1) Deficiencies or inaccuracies relating to all the inventors or applicants (§§ 1.42, 1.43, or § 1.47) may be corrected with a supplemental oath or declaration signed by all the inventors or applicants.

Analysis and conclusion

With the present petition, Applicant has set forth the steps taken to secure inventor Noel Francisco Eddy Lobo's signature on the supplemental declaration. Applicant has demonstrated that a *bona fide* effort was made to secure inventor Noel Francisco Eddy Lobo's signature on the supplemental declaration. Accordingly, it is concluded that petitioner has demonstrated that this is an extraordinary situation, requiring waiver of the rules.

The newly executed declaration, filed on December 17, 2007, will be entered, despite the fact that the requirement set forth in 37 CFR 1.67(a)(1) that all the inventors sign a supplemental oath or declaration has not been satisfied.

The application file is being referred to Technology Center Art Unit 2916 for processing of the CPA filed October 31, 2007.

Telephone inquiries concerning this matter should be directed to the undersigned at (571) 272-3232.

Derek L. Woods
Attorney
Office of Petitions

UNITED STATES PATENT AND TRADEMARK OFFICE

Commissioner for Patents
United States Patent and Trademark Office
P.O. Box 1450
Alexandria, VA 22313-1450
www.uspto.gov

1-22-07

Fross, Zelnick, Lehrman & Zissu, PC
866 United Nations Plaza
New York NY 10017

In re Application of: ALVARO GONZALEZ Serial No.: 29249890 Filed: 10/25/2006 Docket: JCHO 0608920 Title: Handbag (Ramona)	DECISION ON PETITION TO MAKE SPECIAL FOR NEW APPLICATION UNDER 37 C.F.R. § 1.102 & M.P.E.P. § 708.02

This is a decision on the petition filed on 10/26/06 to make the above-identified application special for accelerated examination procedure under 37 C.F.R. § 1.102(d).

The petition to make the application special is **DISMISSED**.

REGULATION AND PRACTICE

A grantable petition to make special under 37 C.F.R. § 1.102(d) and pursuant to the "Change to Practice for Petitions in Patent Applications to Make Special and for Accelerated Examination" published in the Federal Register on June 26, 2006 (71 Fed. Reg. 36323), must satisfy the following conditions:

I. Conditions Regarding the Application:

1. the application must be a non-reissue utility or design application filed under 37 CFR 1.111(a);
2. the application, the petition and the required fees must be filed electronically using the USPTO's electronic filing system (EFS), or EFS-web; if not filed electronically, a statement asserting that EFS and EFS-web were not available during the normal business hours.
3. at the time of filing, the application must be complete under 37 CFR 1.51 and in condition for examination;
4. the application must contain three or fewer independent claims and twenty or fewer total claims and the claims must be directed to a single invention.

II. Conditions Regarding the Petition:

The petition must:

1. be filed with the application;
2. include a statement that applicant agrees not to separately argue the patentability of any independent claim during any appeal in the application;

3. include a statement that applicant agrees to make an election without traverse in a telephone interview.

4. include a statement that applicant agrees to conduct such an interview when requested by the examiner.

5. include a statement, made based on a good faith belief, that a preexamination search in compliance with the following requirements, was conducted, including an identification of the filed of search by United States class and subclass, where applicable, and for database searches, the search logic or chemical structure or sequence used as a query, the name of the file(s) searched and the database service, and the date of the search.

The preexamination search must:

5.1 involve U.S. patents and patent application publications, foreign patent documents, and non-patent literature, unless the applicant can justify with reasonable certainty that no references more pertinent than those already identified are likely to be found in the eliminated sources and includes such a justification with this statement;

5.2. be directed to the claimed invention and encompass all of the features of the claims, giving the claims the broadest reasonable expectation;

5.3. encompass the disclosed features that may be claimed.

6. must provide in support of the petition an accelerated examination support document. An accelerated examination support document must include:

6.1. an information disclosure statement (IDS) in compliance with 37 CFR 1.98 citing each reference deemed most closely related to the subject matter of each of the claims;

6.2. an identification of all the limitations in the claims that are disclosed by the reference specifying where the limitation is disclosed in the cited reference;

6.3. a detailed explanation of how each of the claims are patentable over the references cited with particularity required by 37 CFR 1.111(b) and (c);

6.4. a concise statement of the utility of the invention as defined in each of the independent claims (unless the application is a design application);

6.5. a showing of where each limitation of the claims finds support under 35 USC 112, first paragraph, in the written description of the specification. If applicable, the showing must also identify: (1) each means- (or step) plus-function claim element that invokes consideration under 35 UDC 112, sixth paragraph; and (2) the structure, material, or acts in the specification that corresponds to each means- (or step) plus-function claim element that invokes consideration under 35 UDC 112, sixth paragraph; if the application claims the benefit of one or more applications under title 35, United States Code, the showing must also include where each limitation of the claims finds support under 35 USC 112, first paragraph, in each such application in which such supports exists;

6.6. an identification of any cited references that may be disqualified under 35 USC 103(c).

REVIEW OF FACTS

In this application the conditions regarding section I, subsections 1-4 above are considered to have been met. Additionally, the conditions regarding section II, subsections 1 through 5, 5.2, 5.3, 6.3, 6.5 and 6.6 have also been met. However, the petition fails to comply with conditions

section II subsections 5.1, 6.1, and 6.2 above. Therefore, the petition fails to meet the required conditions to be accorded special status under the accelerated examination procedure. Section II subsection 2 and 6.4 do not apply to designs.

Regarding the requirement of Section II subsection 5.1, because of the foreign priority and the nature of the article, it is expected the following foreign databases should have been searched:

Registered Community Designs, http://oami.europa.eu/RCDOnline/RequestManager

WIPO Designs, http://www.wipo.int/ipdl/en/search/hague/search-struct.jsp

Hong Kong Designs, http://ipsearch.ipd.gov.hk/design/main.jsp?LANG=en

Regarding the requirement of Section II subsections 6.1, non-patent literature references 14-21 on the IDS do not include the date of the publication for each publication listed. 37 CFR 1.98(b)(5). Regarding the requirement of Section II subsections 6.2, the petition does not identify of all the limitations in the claim that are disclosed by the reference specifying where the limitation is disclosed in the cited reference. The petition cites 32 documents as references and at item 9(B) of the support documents petitioner has included a two-sentence description of the limitations shown in all the references. Subsection 6.1 requires the IDS cite each reference deemed most closely related to the subject matter of each of the claim. It is presumed each of the references cited is most closely related to the claim. Missing from the petition are identifications of all the limitations in the claim that are disclosed by each of 32 references, specifying where the limitation is disclosed in the cited reference.

DECISION

For the above-stated reasons, the petition is **dismissed**. The application will therefore be taken up by the examiner for action in its regular turn.

Petitioner is given a single opportunity to perfect the petition. Any request for reconsideration of this decision must be submitted within 1 (one) month or 30 (thirty) days, whichever is longer, from the date of this decision in order to be considered timely. Any request for reconsideration must address the deficiencies indicated above.

Petitioner is reminded that, upon granting of the special status of the application on request for reconsideration, the application will be processed expeditiously. However, due to the dismissal of the instant petition, examination may not be completed within twelve months of the filing date of the application.

Any inquiry regarding this decision should be directed to Joel Sincavage, Special Program Examiner, at (571) 272-2610.

Joel Sincavage, Special Program Examiner
Technology Center 2900

UNITED STATES PATENT AND TRADEMARK OFFICE

Commissioner for Patents
United States Patent and Trademark Office
P.O. Box 1450
Alexandria, VA 22313-1450
www.uspto.gov

7-6-07

Fross, Zelnick, Lehrman & Zissu, PC
866 United Nations Plaza
New York NY 10017

In re Application of:
GONZALEZ, ALVARO
Serial No.: 29249890
Filed: 10/25/2006
Docket: JCHO 0608920
Title: HANDBAG

COMMUNICATION REGARDING ORDER OF EXAMINATION

A decision dismissing the petition to make the above-identified application special for accelerated examination was mailed on 1/22/2007. The decision set a non-extendable time period of one month or 30 (thirty) days, whichever is longer, from its mailing date to correct the deficiency/deficiencies in the petition.

As of 2/22/2007, the expiry of the period set, neither a reply nor a renewed petition was received. Accordingly, the application is no longer eligible for the accelerated examination program.

The application will remain in its regular status and will be taken up by the examiner for action in its regular turn.

Petitioner is reminded that a single opportunity to perfect the petition is given. Therefore, further petitions for accelerated examination in this application will not be entertained.

Any inquiry regarding this decision should be directed to Joel Sincavage, Special Program Examiner, at (571) 272-2610

Joel Sincavage, Special Program Examiner
Technology Center 2900

PTO/SB/27 (09-06)
Approved for use through 03/31/2007. OMB 0651-0031
U.S. Patent and Trademark Office; U.S DEPARTMENT OF COMMERCE
Under the Paperwork Reduction ACT of 1995, no persons are required to respond to collection of information unless it displays a valid OMB control number.

REQUEST FOR EXPEDITED EXAMINATION OF A DESIGN APPLICATION (37 CFR 1.155)

Application Number	29/249 906
Filing Date	
First Named Inventor	AAKAR PATEL
Title	RADIO TRANSMITTER AND BATTERY HOUSING TO ENGAGE
Atty Docket Number	BATBIZ0601D

ADDRESS TO:

MAIL STOP EXPEDITED DESIGN
COMMISSIONER FOR PATENTS
P.O. Box 1450
Alexandria, VA 22313-1450

Approved Jacqueline M. Stone
Jacqueline M. Stone, Director
Technology Center 1700/2900 10/27/06

This is a request for expedited examination of a design application under 37 CFR 1.155.

NOTE: If the Request made by this form accompanies original application papers, include form PTO/SB/18 "Design Patent Application Transmittal" or its equivalent.

A preexamination search was conducted. The field of search was:

D13/103,110 and D14/155,191,240,242,243,433

Related applications: _____

If not previously filed for the above-identified application, the following items required by 37 CFR 1.155 are enclosed:

- Formal drawings (see 37 CFR 1.84).
- The fee set forth in 37 CFR 1.17(k).
- An information disclosure statement in compliance with 37 CFR 1.98.

M. B. Brooks — Signature

10/25/2006 — Date

MICHAEL BLAINE BROOKS — Typed or printed name

39,921 — Registration Number, if applicable

805.579.2500 — Telephone Number

WARNING: Information on this form may become public. Credit card information should not be included on this form. Provide credit card information and authorization on PTO-2038.

This collection of information is required by 37 CFR 1.155. The information is required to obtain or retain a benefit by the public which is to file (and by the USPTO to process) an application. Confidentiality is governed by 35 U.S.C. 122 and 37 CFR 1.11 and 1.14. This collection is estimated to take 6 minutes to complete, including gathering, preparing, and submitting the completed application form to the USPTO. Time will vary depending upon the individual case. Any comments on the amount of time you require to complete this form and/or suggestions for reducing this burden, should be sent to the Chief Information Officer, U.S. Patent and Trademark Office, U.S. Department of Commerce, P.O. Box 1450, Alexandria, VA 22313-1450. DO NOT SEND FEES OR COMPLETED FORMS TO THIS ADDRESS. SEND TO: **Commissioner for Patents, P.O. Box 1450, Alexandria, VA 22313-1450.**

If you need assistance in completing the form, call 1-800-PTO-9199 and select option 2.

UNITED STATES PATENT AND TRADEMARK OFFICE

Commissioner for Patents
United States Patent and Trademark Office
P.O. Box 1450
Alexandria, VA 22313-1450
www.uspto.gov

BAKER & MCKENZIE LLP
PENNZOIL PLACE, SOUTH TOWER
711 LOUISANNA, SUITE 3400
HOUSTON, TX 77002-2716

COPY MAILED

JUN 19 2007

OFFICE OF PETITIONS

In re Application of	:
Rolando Hidalgo	: DECISION GRANTING PETITION
Application No. 29/249,971	: UNDER 37 CFR 1.313(c)(3) (CPA)
Filed: October 27, 2006	:
Attorney Docket No. 31175330-001678	:

This is a decision on the petition under 37 CFR 1.313(c)(3), filed June 15, 2007, to withdraw the above-identified application from issue after payment of the issue fee.

The petition is **GRANTED**.

The above-identified application is hereby withdrawn from issue in favor of a continued prosecution application (CPA) under 37 CFR 1.53(d).

Petitioner is advised that the issue fee paid on April 18, 2007 in the parent application is not refundable nor can it be applied towards any new Notice of Allowance, which may issue on the CPA filed June 15, 2007.

Telephone inquiries regarding this decision should be directed to April Wise at (571) 272-1642.

This matter is being referred to Technology Center AU 2911 for processing of the CPA and consideration of the concurrently filed information disclosure statement.

Karen Creasy

Karen Creasy
Petitions Examiner
Office of Petitions

UNITED STATES PATENT AND TRADEMARK OFFICE

Commissioner for Patents
United States Patent and Trademark Office
P.O. Box 1450
Alexandria, VA 22313-1450
www.uspto.gov

BALLY GAMING INC.
6601 S. BERMUDA ROAD
LAS VEGAS NV 89119

COPY MAILED

OCT 2 5 2007

OFFICE OF PETITIONS

In re Application of	:	
Myers, Gordon H.	:	
Application No. 29/250,032	:	ON PETITION
Filed: October 31, 2006	:	
Attorney Docket No. 11111-29GM06	:	

This is a decision on the petition under 37 C.F.R. § 1.137(b), filed October 3, 2007, to revive the above-identified application.

The petition is **DISMISSED**.

Any request for reconsideration must be submitted within TWO (2) MONTHS from the mail date of this decision. No further petition fee is required for the request. Extensions of time under 37 CFR 1.136(a) are permitted. The reconsideration request should include a cover letter entitled "Renewed Petition under 37 CFR 1.137(b)." This is **not** a final agency action within the meaning of 5 U.S.C. § 704.

The above-identified application became abandoned for failure to submit formal drawings and the issue fee in a timely manner in reply to the Notice of Allowability and Notice of Allowance mailed June 1, 2007. Accordingly, the above-identified application became abandoned on September 2, 2007. A Notice of Abandonment was mailed on October 1, 2007.

A grantable petition under 37 CFR 1.137(b) must be accompanied by:
(1) the required reply,[1]
(2) the petition fee,
(3) a statement that the entire delay in filing the required reply from the due date for the reply until the filing of a grantable petition pursuant to 37 CFR 1.137(b) was unintentional, and
(4) a terminal disclaimer and fee if the application was filed on or before June 8, 1995 or if the application is a design application.

Where there is a question as to whether either the abandonment or the delay in filing a petition under 37 CFR 1.137 was unintentional, the Commissioner may require additional information.[2]

---

[1] In a nonprovisional application abandoned for failure to prosecute, the required reply may be met by the filing of a continuing application. In an application or patent, abandoned or lapsed for failure to pay the issue fee or any portion thereof, the required reply must be the payment of the issue fee or any outstanding balance thereof.

[2] See MPEP 711.03(c)(III)(C) and (D).

The instant petition lacks item(s) (1). Petitioner did submit the Issue Fee Transmittal with payment of the issue fee. However, the Notice of Allowability also required corrected drawings. The drawings are required for revival.

Further correspondence with respect to this matter should be addressed as follows:

By mail: Mail Stop PETITIONS
Commissioner for Patents
Post Office Box 1450
Alexandria, VA 22313-1450

By hand: Customer Window located at:

U.S. Patent and Trademark Office
Customer Service Window Randolph Building
401 Dulany Street
Alexandria, VA 22314

By fax: (571) 273-8300
ATTN: Office of Petitions

Any questions concerning this matter may be directed to the undersigned at (571) 272-3206.

Liana Walsh
Petitions Examiner
Office of Petitions

UNITED STATES PATENT AND TRADEMARK OFFICE

Commissioner for Patents
United States Patent and Trademark Office
P.O. Box 1450
Alexandria, VA 22313-1450
www.uspto.gov

BALLY GAMING INC.
6601 S. BERMUDA ROAD
LAS VEGAS NV 89119

COPY MAILED

NOV 09 2007

OFFICE OF PETITIONS

In re Application of	:	
Myers, Gordon H.	:	
Application No. 29/250,032	:	ON PETITION
Filed: October 31, 2006	:	
Attorney Docket No. 11111-29GM06	:	

CORRECTED DECISION

This is a decision on the petition under 37 C.F.R. § 1.137(b), filed October 3, 2007, to revive the above-identified application. The petition decision mailed on October 25, 2007 is hereby vacated.

The petition is **GRANTED.**

The petition satisfies the conditions for revival pursuant to the provisions of 37 CFR 1.137(b) in that (1) the reply in the form of the Issue Fee transmittal with payment of the issue fee and Replacement Drawings; (2) the petition fee; (3) the required statement of unintentional delay; and (4) the terminal disclaimer have been received. Accordingly, the response has been accepted as having been unintentionally delayed.

This matter is being referred to the Publishing Division for processing into a patent.

Telephone inquiries regarding this decision should be directed to the undersigned at (571) 272-3206.

Liana Walsh
Petitions Examiner
Office of Petitions

SPE RESPONSE FOR CERTIFICATE OF CORRECTION

Paper No.: _____

DATE : 4/22/08

TO SPE OF : Technology Center 2911

29/250051

SUBJECT : Request for Certificate of Correction on Patent No.: D557204S

A response is requested with respect to the accompanying request for a certificate of correction.

Please complete this form and return with file, within 7 days to:
Palm location **7580, Certificates of Correction Branch – South Tower – 9A22**
If response is for an IFW, **return to employee (named below) via PUBSCofC Team in MADRAS.**
With respect to the change(s) requested, correcting Office and/or Applicant's errors, should the patent read as shown in the certificate of correction (COCIN)? No new matter should be introduced, nor should the scope or meaning of the claims be changed.

Elisha Evans

Thank You For Your Assistance

Certificates of Correction Branch
Tel. No. 703-308-9390 EXT 110

The request for issuing the above-identified correction(s) is hereby:
Note your decision on the appropriate box.

- ☒ **Approved** — All changes apply.
- ☐ **Approved in Part** — Specify below which changes **do not** apply.
- ☐ **Denied** — State the reasons for denial below.

Comments:

The patent shows Fig. 4 having the right side of the figure cut off. Therefore, the Certificate of Correction filed 2/14/2008 is APPROVED.

/Cathron Brooks/ — **SPE**

2911 — **Art Unit**

UNITED STATES PATENT AND TRADEMARK OFFICE

Commissioner for Patents
United States Patent and Trademark Office
P.O. Box 1450
Alexandria, VA 22313-1450
www.uspto.gov

HARNESS, DICKEY & PIERCE, P.L.C
7700 BONHOMME
Suite 400
ST. LOUIS, MO 63105

COPY MAILED

MAY 0 2 2008

OFFICE OF PETITIONS

In re Application of	:	
Kelly L. O'Con	:	
Application No. 29/250,099	:	DECISION ON PETITION
Filed: November 1, 2006	:	
Attorney Docket No. 4158-000002	:	

This is a decision on the petition under 37 CFR 1.137(b), filed November 7, 2007, to revive the above-identified design application.

The petition is **GRANTED**.

The application became abandoned for failure to timely file corrected drawings on or before October 10, 2007, as required by the Notice of Allowance and Fee(s) Due, mailed July 10, 2007, which set a statutory period for reply of three (3) months. Accordingly, the application became abandoned on October 11, 2007. A Notice of Abandonment was mailed on November 2, 2007.

The petition satisfies the requirements of 37 CFR 1.137(b) in that petitioner has supplied (1) the reply in the form of drawings, (2) the petition fee of $770, (3) a proper statement of unintentional delay, and (4) a terminal disclaimer and fee as required by 37 CFR 1.137(d). Accordingly, the failure to timely file corrected drawings as required by the Notice of Allowability is accepted as being unintentionally delayed.

The terminal disclaimer is accepted and has been made of record.

Telephone inquiries concerning this decision should be directed to undersigned at (571) 272-1642.

This application is being referred to Office of Data Management for further processing in accordance with this decision on petition.

April M. Wise
Petitions Examiner
Office of Petitions

UNITED STATES PATENT AND TRADEMARK OFFICE

Commissioner for Patents
United States Patent and Trademark Office
P.O. Box 1450
Alexandria, VA 22313-1450
www.uspto.gov

HARNESS, DICKEY, & PIERCE, P.L.C
7700 BONHOMME
SUITE 400
ST. LOUIS, MO 63105

COPY MAILED

MAY 08 2008

OFFICE OF PETITIONS

In re Application of
Kelly L. O'Con
Application No. 29/250,099
Filed: November 1, 2006
Attorney Docket No. 4158-000002

DECISION
ON PETITION

CORRECTED DECISION

This is a corrected decision on the petition under the unintentional provisions of 37 CFR 1.137(b), filed November 7, 2007, to revive the above-identified application.

The petition is **DISMISSED**.

This application became abandoned for failure to submit corrected formal drawings on or before October 10, 2007, as required by the Notice of Allowance and Fee(s) Due and the Notice of Allowability, mailed July 10, 2007. Accordingly, the date of abandonment of this application is October 11, 2007.

A grantable petition under 37 CFR 1.137(b) must be accompanied by: (1) the required reply, unless previously filed; (2) the petition fee as set forth in 37 CFR 1.17(m); (3) a statement that the entire delay in filing the required reply from the due date for the reply until the filing of a grantable petition pursuant to 37 CFR 1.137(b) was unintentional; and (4) any terminal disclaimer (and fee as set forth in 37 CFR 1.20(d)) required by 37 CFR 1.137(d). Where there is a question as to whether either the abandonment or the delay in filing a petition under 37 CFR 1.137 was unintentional, the Director may require additional information. See MPEP 711.03(c)(II)(C) and (D). The instant petition lacks item(s) (4).

A review of the record shows that the issue fee in this application was received on July 10, 2007.

A terminal disclaimer and the $65 terminal disclaimer fee is required under 37 CFR 1.137(d) if the application is: (1) **a design application**, (2) a utility application filed before June 8, 1995, or (3) a plant application filed before June 8, 1995. The terminal disclaimer must dedicate to the public a terminal part of the term of any patent granted the application equivalent to the period of abandonment of the application, and must also apply to any patent granted on any application containing a specific reference under 35 U.S.C. 120, 121 or 365(c) to the application for which revival is sought.

Any request for reconsideration of this decision must be submitted within **TWO (2) MONTHS** from the mail date of this decision. Extensions of time under 37 CFR 1.136(a) are permitted. The reconsideration request should include a cover letter entitled "Renewed Petition under 37 CFR 1.137(b)." This is **not** a final agency action within the meaning of 5 U.S.C. § 704.

Further correspondence with respect to this matter should be addressed as follows:

By Mail: Mail Stop PETITION
Commissioner for Patents
P. O. Box 1450
Alexandria, VA 22313-1450

By hand: U. S. Patent and Trademark Office
Customer Service Window, Mail Stop Petitions
Randolph Building
401 Dulany Street
Alexandria, VA 22314

The centralized facsimile number is **(571) 273-8300.**

This previous decision mailed on May 2, 2008 is hereby by **vacated** as if the mailing of this decision.

Telephone inquiries concerning this decision should be directed to the undersigned at (571) 272-1642.

April M. Wise
Petitions Examiner
Office of Petitions

UNITED STATES PATENT AND TRADEMARK OFFICE

Commissioner for Patents
United States Patent and Trademark Office
P.O. Box 1450
Alexandria, VA 22313-1450
www.uspto.gov

HARNESS, DICKEY & PIERCE, P.L.C
7700 BONHOMME
Suite 400
ST. LOUIS, MO 63105

COPY MAILED

MAY 13 2008

OFFICE OF PETITIONS

In re Application of :
Kelly L. O'Con :
Application No. 29/250,099 : DECISION ON PETITION
Filed: November 1, 2006 :
Attorney Docket No. 4158-000002 :

This is a decision on the renewed petition under 37 CFR 1.137(b), filed May 7, 2008, to revive the above-identified design application.

The petition is **GRANTED**.

The application became abandoned for failure to timely file corrected drawings on or before October 10, 2007, as required by the Notice of Allowance and Fee(s) Due, mailed July 10, 2007, which set a statutory period for reply of three (3) months. Accordingly, the application became abandoned on October 11, 2007. A Notice of Abandonment was mailed on November 2, 2007.

The petition satisfies the requirements of 37 CFR 1.137(b) in that petitioner has supplied (1) the reply in the form of drawings, (2) the petition fee of $770, (3) a proper statement of unintentional delay, and (4) a terminal disclaimer and fee as required by 37 CFR 1.137(d). Accordingly, the failure to timely file corrected drawings as required by the Notice of Allowability is accepted as being unintentionally delayed.

The terminal disclaimer is accepted and has been made of record.

Telephone inquiries concerning this decision should be directed to undersigned at (571) 272-1642.

This application is being referred to Office of Data Management for further processing in accordance with this decision on petition.

April M. Wise
Petitions Examiner
Office of Petitions

UNITED STATES PATENT AND TRADEMARK OFFICE

Commissioner for Patents
United States Patent and Trademark Office
P.O. Box 1450
Alexandria, VA 22313-1450
www.uspto.gov

MAILED

MAR 17 2009

OFFICE OF PETITIONS

CANTOR COLBURN LLP
20 CHURCH STREET
22ND FLOOR
HARTFORD CT 06103

In re Patent No. D561,045	:	
Issue Date: February 5, 2008	:	
Application No. 29/250,109	:	DECISION ON PETITION
Filed: November 2, 2006	:	
Attorney Docket No. CMT-0105	:	

This is a decision on the "PETITION PURSUANT TO 37 C.F.R. 3.81(b)", filed February 3, 2009.

The petition is **GRANTED**.

An application may issue in the name of an assignee rather than the applicant if requested prior to issuance of a patent.[1] However, in the event the request is not made prior to issuance, a Certificate of Correction under 37 CFR 1.323 may be requested. A request for a Certificate of Correction under 37 CFR 1.323 to correct the assignee's name will not be granted unless a petition under 37 CFR 3.81(b) is granted. Such request under 37 CFR 3.81(b) should include:

(A) the processing fee required by 37 CFR 1.17(i);

(B) a request for issuance of the application in the name of the assignee, or a request that a patent be corrected to state the name of the assignee;

---

[1] See 37 CFR 3.81.

(C) a statement that the assignment was submitted for recordation as set forth in 37 CFR 3.11 before issuance of the patent; and

(D) a request for a certificate of correction under 37 CFR 1.323 accompanied by the fee set forth in 37 CFR 1.20(a).[2]

The file is being forwarded to the Certificate of Corrections Branch for issuance of the requested Certificate of Correction.

Telephone inquiries related to this decision should be directed to the undersigned at (571)272-3207.

Cliff Congo
Petitions Attorney
Office of Petitions

[2] MPEP 307.

UNITED STATES PATENT AND TRADEMARK OFFICE

Commissioner for Patents
United States Patent and Trademark Office
P.O. Box 1450
Alexandria, VA 22313-1450
www.uspto.gov

INTELLECTUAL PROPERTY
ALCOA TECHNICAL CENTER, BUILDING C
100 TECHNICAL DRIVE
ALCOA CENTER PA 15069-0001

COPY MAILED

AUG 0 3 2007

OFFICE OF PETITIONS

In re Application of :
Craig M. Saunders et al :
Application No. 29/250,134 : ON PETITION
Filed: November 3, 2006 :
Attorney Docket No. ALCOA 06-1948D01 :

This is a decision on the petition, filed August 1, 2007, under 37 CFR 1.313(c)(3) to withdraw the above-identified application from issue after payment of the issue fee.

The petition is **GRANTED**.

The above-identified application is withdrawn from issue in favor of a continued prosecution application (CPA) under 37 CFR 1.53(d).

Petitioner is advised that the issue fee paid on July 18, 2007 in the parent application is not refundable nor can it be applied towards any new Notice of Allowance which may issue on the CPA filed August 1, 2007.

The file does not indicate a change of address has been submitted, although the address given on the petition differs from the address of record. If appropriate, a change of address should be filed in accordance with MPEP 601.03. A courtesy copy of this decision is being mailed to the address given on the petition; however, the Office will mail all future correspondence solely to the address of record.

Telephone inquiries should be directed to the undersigned at (571) 272-3208.

This matter is being referred to Technology Center AU 2914 for processing of the CPA.

Karen Creasy

Karen Creasy
Petitions Examiner
Office of Petitions

cc:
GREENBERG TRAURIG, LLP
1750 TYSON'S BOULEVARD
SUITE 1200
MCLEAN, VA 22102

UNITED STATES PATENT AND TRADEMARK OFFICE

Commissioner for Patents
United States Patent and Trademark Office
P.O. Box 1450
Alexandria, VA 22313-1450
www.uspto.gov

DORSEY & WHITNEY LLP
INTELLECTUAL PROPERTY DEPARTMENT
250 PARK AVENUE
NEW YORK NY 10177

In re Application of: 2-23-07 DIDIER RICA Serial No.: 29250156 Filed: 11/03/2006 Docket: 188740/US/2 - 476668-0000 Title: CONTAINER	DECISION ON PETITION TO MAKE SPECIAL FOR NEW APPLICATION UNDER 37 C.F.R. § 1.102 & M.P.E.P. § 708.02

This is a decision on the petition filed on 11/03/2006 to make the above-identified application special for accelerated examination procedure under 37 C.F.R. § 1.102(d).

The petition to make the application special is **DISMISSED**.

REGULATION AND PRACTICE

A grantable petition to make special under 37 C.F.R. § 1.102(d) and pursuant to the "Change to Practice for Petitions in Patent Applications to Make Special and for Accelerated Examination" published in the Federal Register on June 26, 2006 (71 Fed. Reg. 36323), must satisfy the following conditions:

I. Conditions Regarding the Application:

1. the application must be a non-reissue utility or design application filed under 37 CFR 1.111(a);
2. the application, the petition and the required fees must be filed electronically using the USPTO's electronic filing system (EFS), or EFS-web; if not filed electronically, a statement asserting that EFS and EFS-web were not available during the normal business hours.
3. at the time of filing, the application must be complete under 37 CFR 1.51 and in condition for examination;
4. the application must contain three or fewer independent claims and twenty or fewer total claims and the claims must be directed to a single invention.

II. Conditions Regarding the Petition:

The petition must:

1. be filed with the application;
2. include a statement that applicant agrees not to separately argue the patentability of any independent claim during any appeal in the application;

3. include a statement that applicant agrees to make an election without traverse in a telephone interview.

4. include a statement that applicant agrees to conduct such an interview when requested by the examiner.

5. include a statement, made based on a good faith belief, that a preexamination search in compliance with the following requirements, was conducted, including an identification of the filed of search by United States class and subclass, where applicable, and for database searches, the search logic or chemical structure or sequence used as a query, the name of the file(s) searched and the database service, and the date of the search.

The preexamination search must:

5.1 involve U.S. patents and patent application publications, foreign patent documents, and non-patent literature, unless the applicant can justify with reasonable certainty that no references more pertinent than those already identified are likely to be found in the eliminated sources and includes such a justification with this statement;

5.2. be directed to the claimed invention and encompass all of the features of the claims, giving the claims the broadest reasonable expectation;

5.3. encompass the disclosed features that may be claimed.

6. must provide in support of the petition an accelerated examination support document. An accelerated examination support document must include:

6.1. an information disclosure statement (IDS) in compliance with 37 CFR 1.98 citing each reference deemed most closely related to the subject matter of each of the claims;

6.2. an identification of all the limitations in the claims that are disclosed by the reference specifying where the limitation is disclosed in the cited reference;

6.3. a detailed explanation of how each of the claims are patentable over the references cited with particularity required by 37 CFR 1.111(b) and (c);

6.4. a concise statement of the utility of the invention as defined in each of the independent claims (unless the application is a design application);

6.5. a showing of where each limitation of the claims finds support under 35 USC 112, first paragraph, in the written description of the specification. If applicable, the showing must also identify: (1) each means- (or step) plus-function claim element that invokes consideration under 35 UDC 112, sixth paragraph; and (2) the structure, material, or acts in the specification that corresponds to each means- (or step) plus-function claim element that invokes consideration under 35 UDC 112, sixth paragraph; if the application claims the benefit of one or more applications under title 35, United States Code, the showing must also include where each limitation of the claims finds support under 35 USC 112, first paragraph, in each such application in which such supports exists;

6.6. an identification of any cited references that may be disqualified under 35 USC 103(c).

REVIEW OF FACTS

In this application the conditions regarding section I, subsections 1-4 above are considered to have been met. Additionally, the conditions regarding section II, subsections 1, 3, 5.2, 5.3, 6.1 6.2, 6.3 and 6.5 have also been met. However, the petition fails to comply with conditions

section II subsections 4 through 5.1 above. (Section II subsection 2 and 6.4 do not apply to designs.) Therefore, the petition fails to meet the required conditions to be accorded special status under the accelerated examination procedure.

Regarding the requirement of Section II subsection 4, the petition does not include a statement that applicant agrees conduct such an interview when requested by the examiner.

Regarding the requirement of Section II subsection 5.1, the petition does not include a statement, made based on a good faith belief, that a preexamination search in compliance with the following requirements, was conducted, including an identification of database searches, the search logic used as a query, the name of the file(s) searched and the database service, and the date of the search. While the class and subclass search is adequate, it is expected that non-patent literature and foreign databases would have been searched for the claimed design. Internet image search should include at least terms such as: "tapered bottle", "square bottle", "tapered perfume", "square perfume" "tapered olive oil", "square olive oil", "tapered cologne bottle", "square cologne bottle".

Locarno Class 9-01 should be searched in at least the following foreign databases: Office for Harmonization in the Internal Market (OHIM) Community Designs, WIPO Designs, UK Patent Office Designs, IP Australia Designs, Canadian Industrial Designs. Hong Kong Registered Designs, Registered Designs National Board of Patents and Registration of Finland.

DECISION

For the above-stated reasons, the petition is **dismissed**. The application will therefore be taken up by the examiner for action in its regular turn.

Petitioner is given a single opportunity to perfect the petition. Any request for reconsideration of this decision must be submitted within 1 (one) month or 30 (thirty) days, whichever is longer, from the date of this decision in order to be considered timely. Any request for reconsideration must address the deficiencies indicated above.

Petitioner is reminded that, upon granting of the special status of the application on request for reconsideration, the application will be processed expeditiously. However, due to the dismissal of the instant petition, examination may not be completed within twelve months of the filing date of the application.

Any inquiry regarding this decision should be directed to Joel Sincavage, Special Program Examiner, at (571) 272-2610.

Joel Sincavage, Special Program Examiner
Technology Center 2900

UNITED STATES PATENT AND TRADEMARK OFFICE

Commissioner for Patents
United States Patent and Trademark Office
P.O. Box 1450
Alexandria, VA 22313-1450
www.uspto.gov

6-8-07

DORSEY & WHITNEY LLP
INTELLECTUAL PROPERTY DEPARTMENT
250 PARK AVENUE
NEW YORK NY 10177

In re Application of: DIDIER RICA Serial No.: 29250156 Filed: November 3, 2006 Docket: 188740/US/2 - 476668-0000 Title: CONTAINER	DECISION ON PETITION TO MAKE SPECIAL FOR NEW APPLICATION UNDER 37 C.F.R. § 1.102 & M.P.E.P. § 708.02

This is a decision on the petition filed on 3/9/2007 to make the above-identified application special for accelerated examination procedure under 37 C.F.R. § 1.102(d).

The petition to make the application special is GRANTED.

The application is eligible for accelerated examination and the petition complies with the conditions for granting the application special status pursuant to the "Change to Practice for Petitions in Patent Applications to Make Special and for Accelerated Examination" published June 26, 2006, in the Federal Register. (71 Fed. Reg. 36323).

The prosecution of the instant application will be conducted expeditiously according to the following guidelines.

1. The application will be docketed to an examiner and taken up for action within two weeks of the date of this decision.

2. Restriction Practice:
   If the examiner determines that the claims are not directed to a single invention, a telephone request to elect one single invention will be made pursuant to MPEP 812.01. As a prerequisite to the grant of this petition, the applicant has agreed to make an oral election, by telephone, without traverse. If the applicant refuses to make an election without traverse, or the examiner cannot reach the applicant after a reasonable effort, the examiner will treat the first claimed invention (invention defined by claim 1) as having being constructively elected without traverse for examination.

3. Office action:
   If it is determined that, after appropriate consultation, there is a potential rejection or any other issue to be addressed, the examiner will telephone the applicant and arrange an interview to discuss and resolve the issue. An Office action, other than a Notice of Allowance and Fee(s) Due (Notice of Allowance), will not be issued unless either: 1) an interview was conducted but did not result in agreed to action that places the application in condition for allowance, or, 2) a determination is made that an interview would be unlikely to result in the application being placed in condition for allowance, and 3) an internal conference has been held to review any rejection of any claim.

4. Time for Reply:
   An Office action other than a Notice of Allowance or a final Office action will set a shortened statutory period of one month or thirty days, whichever is longer, for reply with no extension of time available under 37 CFR 1.136(a). Failure to timely file a reply within this non-extendible period for reply will result in the abandonment of the application.

5. Reply by Applicant:
   A timely reply to an Office action other than the Notice of Allowance must be submitted electronically via EFS or EFS-web and limited to addressing the rejections, objections and requirement made. Any amendment that attempts to: 1) add claims which would result in more than three pending independent claims or more than twenty pending total claims; 2) present claims not encompassed by the pre-examination search or an updated accelerated examination support document; or 3) present claims that are directed a non-elected invention or an invention other than that previously claimed and examined in the application, will be treated as not fully responsive and will not be entered.

   For any amendment to the claims (including any new claim) that is not encompassed by the accelerated examination support document, applicant must provide an updated accelerated examination support document that encompasses the amended or new claims at the time of filing of the amendment.

   To proceed expeditiously with the examination, it is recommended that a reply with amendments made to any claim or with any new claim being added be accompanied by an updated accelerated examination support document or a statement explaining how the amended or new claim is supported by the original accelerated examination support document.

6. Information Disclosure Statement (IDS):
   Any IDS filed during prosecution must be submitted electronically via EFS or EFS-web, accompanied by an updated accelerated examination support document, and be in compliance with 37 CFR 1.97 and 1.98.

7. Post-Allowance Processing:
   To expedite processing of the allowed application into a patent, the applicant must: 1) pay the required fees within one month of the date of the Notice of Allowance, and 2) not file any post allowance papers not required by the Office. In no event may the issue fee be paid and accepted later than three months from the date of the Notice of Allowance.

8. After-Final and Appeal Procedures:
   To expedite prosecution, after receiving the final Office action, applicant must: 1) promptly file a notice of appeal, an appeal brief and appeal fees; and 2) not request a pre-appeal brief conference.

   Any amendment, affidavit or other evidence filed after final Office action must comply with applicable rules and the requirements outlined in numbered paragraphs 5 and 6 above.

   On appeal, the application will proceed according to normal appeal procedures. After appeal, the application will again be treated special.

9. Proceedings Outside the Normal Examination Process:
   If the application becomes involved in a proceeding that is outside the normal examination process (e.g., a secrecy order, national security review, interference proceeding, petitions under 37 CFR 1.181, 182 or 183), the application will be treated special before and after such proceeding.

10. Final Disposition:
    The twelve-month goal of this accelerated examination procedure ends with a final disposition. The mailing of a final Office action, a Notice of Allowance, the filing of a Notice of Appeal, or the filing of a Request for Continued Examination (RCE) is the final disposition.

If, during prosecution, a paper is not filed electronically using EFS-web, a reply is filed but is not fully responsive, the application is involved in an appeal, or a proceeding outside normal examination process, the application will still be examined expeditiously, however, the final disposition may occur more than twelve months from the filing of the application.

Any inquiry regarding this decision should be directed to Joel Sincavage, Special Program Examiner, at (571) 272-2610.

Joel Sincavage, Special Program Examiner
Technology Center 2900

UNITED STATES PATENT AND TRADEMARK OFFICE

Commissioner for Patents
United States Patent and Trademark Office
P.O. Box 1450
Alexandria, VA 22313-1450
www.uspto.gov

COPY MAILED
DEC 18 2008

DORSEY & WHITNEY LLP
INTELLECTUAL PROPERTY DEPARTMENT
250 PARK AVENUE
NEW YORK NY 10177

In re Application of	:
Didier Rica	: DECISION GRANTING PETITION
Application No. 29/250,156	: UNDER 37 CFR 1.313(c)(3) (CPA)
Filed: November 3, 2006	:
Attorney Docket No. 188740/US/2 – 476668-000	:

This is a decision on the petition under 37 CFR 1.313(c)(3), filed December 17, 2008, to withdraw the above-identified application from issue after payment of the issue fee.

The petition is **GRANTED**.

The above-identified application is hereby withdrawn from issue in favor of a continued prosecution application (CPA) under 37 CFR 1.53(d).

Petitioner is advised that the issue fee paid on November 13, 2008 in the parent application is not refundable nor can it be applied towards any new Notice of Allowance which may issue on the CPA filed December 17, 2008.

Telephone inquiries regarding this decision should be directed to undersigned at (571) 272-1642.

This matter is being referred to Technology Center AU 2916 for processing of the CPA and consideration of the concurrently filed December 17, 2008.

/AMW/
April M. Wise
Petitions Examiner
Office of Petitions

UNITED STATES PATENT AND TRADEMARK OFFICE

Commissioner for Patents
United States Patent and Trademark Office
P.O. Box 1450
Alexandria, VA 22313-1450
www.uspto.gov

MATHEW R. P. PERRONE, JR.
210 SOUTH MAIN STREET
ALGONQUIN IL 60102-2639

COPY MAILED

MAY 01 2008

OFFICE OF PETITIONS

ON PETITION

In re Application of
Fred P. Radke :
Application No. 29/250,173 :
Filed: November 6, 2006 :
Attorney Docket Number: Y6.0190 :

This is a decision on the petition, filed September 10, 2007 under 37 CFR 1.137(b)[1], to revive the above identified application.

The petition is **GRANTED**.

This application became abandoned August 8, 2007 because the issue fee transmittal filed May 17, 2007 failed to include payment for the issue fee or to authorize payment for the issue fee. Accordingly, a Notice of Abandonment was mailed August 31, 2007.

All other requirements of 37 CFR 1.137(b), including the filing of a terminal disclaimer, having now been met, this matter is being referred to the Publishing Division to be processed into a patent.

Telephone inquiries concerning this matter may be directed to the undersigned Petitions Attorney at (571) 272-3212.

Patricia Faison-Ball

Patricia Faison-Ball
Senior Petitions Attorney
Office of Petitions

---

[1]Effective December 1, 1997, the provisions of 37 CFR 1.137(b) now provide that where the delay in reply was unintentional, a petition may be filed to revive an abandoned application or a lapsed patent pursuant to 37 CFR 1.137(b). A grantable petition filed under the provisions of 37 CFR 1.137(b) must be accompanied by:

(1) the required reply, unless previously filed. In a nonprovisional application abandoned for failure to prosecute, the required reply may be met by the filing of a continuing application. In an application or patent, abandoned or lapsed for failure to pay the issue fee or any portion thereof, the required reply must be the payment of the issue fee or any outstanding balance thereof.

(2) the petition fee as set forth in 37 CFR 1.17(m);

(3) a statement that the entire delay in filing the required reply from the due date for the reply until the filing of a grantable petition pursuant to 37 CFR 1.137(b) was unintentional. The Commissioner may required additional information where there is a question whether the delay was unintentional; and

(4) any terminal disclaimer (and fee as set forth in 37 CFR 1.20(d)) required pursuant to 37 CFR 1.137(c)).

UNITED STATES PATENT AND TRADEMARK OFFICE

Commissioner for Patents
United States Patent and Trademark Office
P.O. Box 1450
Alexandria, VA 22313-1450
www.uspto.gov

MATHEW R. P. PERRONE, JR.
210 SOUTH MAIN STREET
ALGONQUIN IL 60102-2639

COPY MAILED

JUN 25 2008

OFFICE OF PETITIONS
ON PETITION

In re Application of
Fred P. Radke :
Application No. 29/250,173 :
Filed: November 6, 2006 :
Attorney Docket Number: Y6.0190 :

CORRECTED DECISION[1]

This is a corrected decision on the petition filed September 10, 2007 under 37 CFR 1.137(b)[2], to revive the above identified application.

The petition under 37 CFR 1.137 (b) is **DISMISSED**.

Any further petition to revive the above-identified application must be submitted within TWO (2) MONTHS from the mail date of this decision. Extensions of time under 37 CFR 1.136(b) are permitted. The reconsideration request should include a cover letter entitled "Petition under 37 CFR 1.137." This is **not** final agency action within the meaning of 5 U.S.C. § 704.

This application became abandoned August 8, 2007 because the issue fee transmittal filed May 17, 2007 failed to include payment for the issue fee or to authorize payment for the issue fee. Also, the Notice of Allowability mailed on May 7, 2007 required the filing of Corrected Drawings within two months. The corrected drawings were also not

---

[1]The decision mailed May 1, 2008 has been vacated and replaced with this decision.

[2]Effective December 1, 1997, the provisions of 37 CFR 1.137(b) now provide that where the delay in reply was unintentional, a petition may be filed to revive an abandoned application or a lapsed patent pursuant to 37 CFR 1.137(b). A grantable petition filed under the provisions of 37 CFR 1.137(b) must be accompanied by:

(1) the required reply, unless previously filed. In a nonprovisional application abandoned for failure to prosecute, the required reply may be met by the filing of a continuing application. In an application or patent, abandoned or lapsed for failure to pay the issue fee or any portion thereof, the required reply must be the payment of the issue fee or any outstanding balance thereof.

(2) the petition fee as set forth in 37 CFR 1.17(m);

(3) a statement that the entire delay in filing the required reply from the due date for the reply until the filing of a grantable petition pursuant to 37 CFR 1.137(b) was unintentional. The Commissioner may required additional information where there is a question whether the delay was unintentional; and

(4) any terminal disclaimer (and fee as set forth in 37 CFR 1.20(d)) required pursuant to 37 CFR 1.137(c)).

received in the USPTO by the due date. Accordingly, a Notice of Abandonment was mailed August 31, 2007.

While the issue fee and petition fee were paid with the September 10, 2007 petition, the petition does not satisfy requirement (1) of the regulation as the corrected drawings have not been filed. Thus, the application will remain in an abandoned status until such time as the corrected drawings are filed.

Further correspondence with respect to this matter should be addressed as follows:

By mail: Mail Stop Petitions
Commissioner for Patents
P.O. Box 1450
Alexandria VA 22313-1450

By FAX: (571) 273-8300
ATTN: Office of Petitions

Telephone inquiries concerning this matter may be directed to the undersigned Petitions Attorney at (571) 272-3212.

Patricia Faison-Ball

Patricia Faison-Ball
Senior Petitions Attorney
Office of Petitions

UNITED STATES PATENT AND TRADEMARK OFFICE

Commissioner for Patents
United States Patent and Trademark Office
P.O. Box 1450
Alexandria, VA 22313-1450
www.uspto.gov

MATHEW R. P. PERRONE, JR.
210 SOUTH MAIN STREET
ALGONQUIN IL 60102-2639

COPY MAILED

AUG 1 5 2008

OFFICE OF PETITIONS

In re Application of
Fred P. Radke :
Application No. 29/250,173 : ON PETITION
Filed: November 6, 2006 :
Attorney Docket Number: Y6.0190 :

This is a decision on the renewed petition filed July 1, 2008 under 37 CFR 1.137(b)[1], to revive the above identified application.

The petition under 37 CFR 1.137 (b) is **GRANTED**.

This application became abandoned August 8, 2007 because the issue fee transmittal filed May 17, 2007 failed to include payment for the issue fee or to authorize payment for the issue fee. Also, the Notice of Allowability mailed on May 7, 2007 required the filing of Corrected Drawings within two months. The corrected drawings were also not received in the USPTO by the due date. Accordingly, a Notice of Abandonment was mailed August 31, 2007.

While the issue fee and petition fee were paid with the September 10, 2007 petition, the corrected drawings were not and a corrected decision mailed June 25, 2008 dismissed the petition.

Comes now petitioner with the instant renewed petition and the corrected drawings.

---

[1]Effective December 1, 1997, the provisions of 37 CFR 1.137(b) now provide that where the delay in reply was unintentional, a petition may be filed to revive an abandoned application or a lapsed patent pursuant to 37 CFR 1.137(b). A grantable petition filed under the provisions of 37 CFR 1.137(b) must be accompanied by:

(1) the required reply, unless previously filed. In a nonprovisional application abandoned for failure to prosecute, the required reply may be met by the filing of a continuing application. In an application or patent, abandoned or lapsed for failure to pay the issue fee or any portion thereof, the required reply must be the payment of the issue fee or any outstanding balance thereof.

(2) the petition fee as set forth in 37 CFR 1.17(m);

(3) a statement that the entire delay in filing the required reply from the due date for the reply until the filing of a grantable petition pursuant to 37 CFR 1.137(b) was unintentional. The Commissioner may required additional information where there is a question whether the delay was unintentional; and

(4) any terminal disclaimer (and fee as set forth in 37 CFR 1.20(d)) required pursuant to 37 CFR 1.137(c)).

All other requirements of 37 CFR 1.137(b), including the filing of a terminal disclaimer, and fee, having now been met, this matter is being referred to the Publishing Division.

Telephone inquiries concerning this matter may be directed to the undersigned Petitions Attorney at (571) 272-3212.

Patricia Faison-Ball

Patricia Faison-Ball
Senior Petitions Attorney
Office of Petitions

UNITED STATES PATENT AND TRADEMARK OFFICE

COMMISSIONER FOR PATENTS
UNITED STATES PATENT AND TRADEMARK OFFICE
P.O. BOX 1450
ALEXANDRIA, VA 22313-1450
www.uspto.gov

GROSSMAN, TUCKER, PERREAULT & PFLEGER, PLLC
55 SOUTH COMMERICAL STREET
MANCHESTER NH 03101

COPY MAILED

NOV 21 2007

OFFICE OF PETITIONS

In re Application of	:	
PAOLO CORCAGNANI	:	DECISION ACCORDING STATUS
Application No. 29/250,192	:	UNDER 37 CFR 1.47(b)
Filed: 11/06/2006	:	
Attorney Docket No. HHS118	:	
Title: Spectacles	:	

This is in response to the petition under 37 CFR 1.47(b), filed July 2, 2007. Petitioner obtained an extension of time for response within the fifth month. Accordingly, the petition is filed timely.

The petition is **granted**.

Petitioner showed that Paolo Corcagnani, the non-signing inventor, constructively refused to join in the application by after petitioner presented him with a copy of the application papers. Specifically, in his Verified Statement, Jurgen Hruschka declared that on March 6, 2007, he mailed a copy of the design application and a Combined Declaration and Power of Attorney to Mr. Corcagnani's last known address. Mr. Hruschka stated that Mr. Corcagnani confirmed receipt of the documents on March 10, 2007. A copy of the letter to Mr. Corcagnani, an English language translation of the letter, and a copy of the return registered mail receipt of the letter accompany the petition. Mr. Hruschka asserted that Mr. Corcagnani did not reply to his letter seeking the inventor's signature on the declaration. In addition, petitioner demonstrated that ic! Berlin Brillen GmbH has a proprietary interest in the application by virtue of an assignment recorded in the USPTO at Reel/Frame 019414/0697. Petitioner submitted the requisite fees and showed that such action is necessary to prevent irreparable damage. Lastly, petitioner filed a declaration in compliance with 37 CFR 1.63 and 1.64.

This application and papers have been reviewed and found in compliance with 37 CFR 1.47(b). This application is hereby accorded Rule 1.47(b) status. As provided in Rule 1.47(c), this Office will forward notice of this application's filing to the non-signing inventor at the address given in the petition. Notice of the filing of this application will also be published in the Official Gazette.

This matter is being referred to Technology Center Art Unit 2915 for examination in due course.

Telephone inquiries related to this decision should be directed to the undersigned at (571) 272-3211.

Christina Tartera Donnell

Christina Tartera Donnell
Senior Petitions Attorney
Office of Petitions

UNITED STATES PATENT AND TRADEMARK OFFICE

COMMISSIONER FOR PATENTS
UNITED STATES PATENT AND TRADEMARK OFFICE
P.O. BOX 1450
ALEXANDRIA, VA 22313-1450
www.uspto.gov

Paolo Corcagnani
Metzerstr, 23
10405 Berlin, Germany

COPY MAILED

NOV 2 1 2007

OFFICE OF PETITIONS

In re Application of :
PAOLO CORCAGNANI :
Application No. 29/250,192 : LETTER
Filed: 11/06/2006 :
Attorney Docket No. HHS118 :
Title: Spectacles :

Mr. Corcagnani:

You are named as a sole inventor in the above-identified United States patent application filed under the provisions of 35 U.S.C. 116 (United States Code) and 37 CFR 1.47(b), Rules of Practice in Patent Cases. Should a patent be granted on the application you will be designated therein as a sole inventor.

As a named inventor you are entitled to inspect any paper in the file wrapper of the application, order copies of all or any part thereof (at a prepaid cost per 37 CFR 1.19) or make your position of record in the application. Alternatively, you may arrange to do any of the preceding through a registered patent attorney or agent presenting written authorization from you. If you care to join the application, counsel of record (see below) would presumably assist you. Joining in the application would entail the filing of an appropriate oath or declaration by you pursuant to 37 CFR 1.63.

Requests for information regarding your application should be directed to the File Information Unit at (703) 308-2733. Information regarding how to pay for and order a copy of the application, or a specific paper in the application should be directed to Certification Division at (703) 308-9726 or 1-800-972-6382 (outside the Washington D.C. area).

Christina T. Donnell

Christina Tartera Donnell
Senior Petitions Attorney
Office of Petitions

GROSSMAN, TUCKER, PERREAULT & PFLEGER, PLLC
55 SOUTH COMMERICAL STREET
MANCHESTER NH 03101

UNITED STATES PATENT AND TRADEMARK OFFICE

Commissioner for Patents
United States Patent and Trademark Office
P.O. Box 1450
Alexandria, VA 22313-1450
www.uspto.gov

GROSSMAN, TUCKER, PERREAULT & PFLEGER, PLLC
55 SOUTH COMMERICAL STREET
MANCHESTER NH 03101

COPY MAILED

NOV 20 2007

OFFICE OF PETITIONS

In re Application of	:	DECISION ACCORDING STATUS
PAOLO CORCAGNANI	:	UNDER 37 CFR 1.47(b)
Application No. 29/250,199	:	
Filed: 11/06/2006	:	
Attorney Docket No. HHS119	:	
Title: Spectacles	:	

This is in response to the petition under 37 CFR 1.47(b), filed July 6, 2007. Petitioner obtained an extension of time for response within the fifth month. Accordingly, the petition is filed timely.

The petition is **granted**.

Petitioner showed that Paolo Corcagnani, the non-signing inventor, constructively refused to join in the application by after petitioner presented him with a copy of the application papers. Specifically, in his Verified Statement, Jurgen Hruschka declared that on March 6, 2007, he mailed a copy of the design application and a Combined Declaration and Power of Attorney to Mr. Corcagnani's last known address. Mr. Hruschka stated that Mr. Corcagnani confirmed receipt of the documents on March 10, 2007. A copy of the letter to Mr. Corcagnani, an English language translation of the letter, and a copy of the return registered mail receipt of the letter accompany the petition. Mr. Hruschka asserted that Mr. Corcagnani did not reply to his letter seeking the inventor's signature on the declaration. In addition, petitioner demonstrated that ic! Berlin Brillen GmbH has a proprietary interest in the application by virtue of an assignment recorded in the USPTO at Reel/Frame 019414/0697. Petitioner submitted the requisite fees and showed that such action is necessary to prevent irreparable damage. Lastly, petitioner filed a declaration in compliance with 37 CFR 1.63 and 1.64.

This application and papers have been reviewed and found in compliance with 37 CFR 1.47(b). This application is hereby accorded Rule 1.47(b) status. As provided in Rule 1.47(c), this Office will forward notice of this application's filing to the non-signing inventor at the address given in the petition. Notice of the filing of this application will also be published in the Official Gazette.

This matter is being referred to Technology Center Art Unit 2913 for examination in due course.

Telephone inquiries related to this decision should be directed to the undersigned at (571) 272-3211.

Christina Tartera Donnell

Christina Tartera Donnell
Senior Petitions Attorney
Office of Petitions

UNITED STATES PATENT AND TRADEMARK OFFICE

Commissioner for Patents
United States Patent and Trademark Office
P.O. Box 1450
Alexandria, VA 22313-1450
www.uspto.gov

Paolo Corcagnani
Metzerstr, 23
10405 Berlin, Germany

COPY MAILED

NOV 20 2007

OFFICE OF PETITIONS

LETTER

In re Application of :
PAOLO CORCAGNANI :
Application No. 29/250,199 :
Filed: 11/06/2006 :
Attorney Docket No. HHS119 :
Title: Spectacles :

Mr. Corcagnani:

You are named as a sole inventor in the above-identified United States patent application filed under the provisions of 35 U.S.C. 116 (United States Code) and 37 CFR 1.47(b), Rules of Practice in Patent Cases. Should a patent be granted on the application you will be designated therein as a sole inventor.

As a named inventor you are entitled to inspect any paper in the file wrapper of the application, order copies of all or any part thereof (at a prepaid cost per 37 CFR 1.19) or make your position of record in the application. Alternatively, you may arrange to do any of the preceding through a registered patent attorney or agent presenting written authorization from you. If you care to join the application, counsel of record (see below) would presumably assist you. Joining in the application would entail the filing of an appropriate oath or declaration by you pursuant to 37 CFR 1.63.

Requests for information regarding your application should be directed to the File Information Unit at (703) 308-2733. Information regarding how to pay for and order a copy of the application, or a specific paper in the application should be directed to Certification Division at (703) 308-9726 or 1-800-972-6382 (outside the Washington D.C. area).

Christina Tartera Donnell

Christina Tartera Donnell
Senior Petitions Attorney
Office of Petitions

GROSSMAN, TUCKER, PERREAULT & PFLEGER, PLLC
55 SOUTH COMMERICAL STREET
MANCHESTER NH 03101

UNITED STATES PATENT AND TRADEMARK OFFICE

Commissioner for Patents
United States Patent and Trademark Office
P.O. Box 1450
Alexandria, VA 22313-1450
www.uspto.gov

MILLER, MATTHIAS & HULL
ONE NORTH FRANKLIN STREET
SUITE 2350
CHICAGO, IL 60606

COPY MAILED
AUG 05 2008

In re Application of	:	
Jonathan Pete Myers	:	
Application No. 29/250,230	:	ON PETITION
Filed: November 7, 2006	:	
Attorney Docket No. 50012/50009	:	

This is a decision on the petition, filed April 18, 2008, to revive the above-identified application under 37 CFR 1.137(b) and supplemented on April 22, 2008.

The petition is **DISMISSED**.

Any request for reconsideration of this decision must be submitted within TWO (2) MONTHS from the mail date of this decision. Extensions of time under 37 CFR 1.136(a) are permitted. The reconsideration request should include a cover letter entitled "Renewed Petition under 37 CFR 1.137(b)." This is **not** a final agency action within the meaning of 5 U.S.C. § 704.

The application became abandoned for failure to timely pay the issue fee on or before March 17, 2008, as required by the Notice of Allowance and Fee(s) Due, mailed December 17, 2007. A Notice of Abandonment was mailed on April 10, 2008. In response, on April 18, 2008, the present petition was filed and supplemented on April 22, 2008.

A grantable petition under 37 CFR 1.137(b)[1] must be accompanied by: (1) the required reply,[2] unless previously filed; (2) the petition fee as set forth in 37 CFR 1.17(m); (3) a statement that the entire delay in filing the required reply from the due date for the reply until the filing of a grantable petition pursuant to 37 CFR 1.137(b) was unintentional; and (4) any terminal disclaimer (and fee as set forth in 37 CFR 1.20(d)) required by 37 CFR 1.137(c). Where there is a question as to whether either the

[1] As amended effective December 1, 1997. See Changes to Patent Practice and Procedure; Final Rule Notice, 62 Fed. Reg. 53131, 53194-95 (October 10, 1997), 1203 Off. Gaz. Pat. Office 63, 119-20 (October 21, 1997).

[2] In a nonprovisional application abandoned for failure to prosecute, the required reply may be met by the filing of a continuing application. In an application or patent, abandoned or lapsed for failure to pay the issue fee or any portion thereof, the required reply must be the payment of the issue fee or any outstanding balance thereof.

in 37 CFR 1.20(d)) required by 37 CFR 1.137(c). Where there is a question as to whether either the abandonment or the delay in filing a petition under 37 CFR 1.137 was unintentional, the Commissioner may require additional information. See MPEP 711.03(c)(II)(C) and (D).

The petition lacks item (4) above. Since the above-identified application is a design application, 37 CFR 1.137(d) requires a terminal disclaimer dedicating to the public a terminal part of the term of any patent granted thereon equivalent to the period of abandonment of the application. The period of abandonment will be computed to be the number of months from the date of abandonment to the date of filing a grantable petition. A terminal disclaimer fee of $130 ($65 if small entity) is required. If the terminal disclaimer is signed by an assignee, the assignee must comply with the requirements of 37 CFR 3.73(b).

Further correspondence with respect to this matter should be addressed as follows:

By mail: Mail Stop PETITION
Commissioner for Patents
Post Office Box 1450
Alexandria, VA 22313-1450

By hand: U.S. Patent and Trademark Office
Customer Service Window, Mail Stop PETITION
Randolph Building
401 Dulany Street
Alexandria, VA 22314

The centralized facsimile number is **(571) 273-8300**.

Any questions concerning this matter may be directed to the undersigned at (571) 272-3204.

Sherry D. Brinkley
Petitions Examiner
Office of Petitions

UNITED STATES PATENT AND TRADEMARK OFFICE

Commissioner for Patents
United States Patent and Trademark Office
P.O. Box 1450
Alexandria, VA 22313-1450
www.uspto.gov

MILLER, MATTHIAS & HULL
ONE NORTH FRANKLIN STREET
SUITE 2350
CHICAGO, IL 60606

COPY MAILED

SEP 30 2008

OFFICE OF PETITIONS

In re Application of :
Jonathan Pete Myers :
Application No. 29/250,230 : ON PETITION
Filed: November 7, 2006 :
Attorney Docket No. 50012/50009 :

This is a decision on the renewed petition, filed August 20, 2008, to revive the above-identified application under 37 CFR 1.137(b).

The petition is **DISMISSED**.

Any request for reconsideration of this decision must be submitted within TWO (2) MONTHS from the mail date of this decision. Extensions of time under 37 CFR 1.136(a) are permitted. The reconsideration request should include a cover letter entitled "Renewed Petition under 37 CFR 1.137(b)." This is **not** a final agency action within the meaning of 5 U.S.C. § 704.

The application became abandoned for failure to timely pay the issue fee on or before March 17, 2008. A Notice of Abandonment was mailed on April 10, 2008. A petition under 37 CFR 1.137(b) was filed on April 18, 2008 and supplemented on April 22, 2008; however, the petition was dismissed in a decision mailed August 5, 2008. On August 20, 2008, the present petition was filed.

A grantable petition under 37 CFR 1.137(b)[1] must be accompanied by: (1) the required reply,[2] unless previously filed; (2) the petition fee as set forth in 37 CFR 1.17(m); (3) a statement that the entire delay in filing the required reply from the due date for the reply until the filing of a grantable petition pursuant to 37 CFR 1.137(b) was unintentional; and (4) any terminal disclaimer (and fee as set forth in 37 CFR 1.20(d)) required by 37 CFR 1.137(c). Where there is a question as to whether either the

[1] As amended effective December 1, 1997. See Changes to Patent Practice and Procedure; Final Rule Notice, 62 Fed. Reg. 53131, 53194-95 (October 10, 1997), 1203 Off. Gaz. Pat. Office 63, 119-20 (October 21, 1997).

[2] In a nonprovisional application abandoned for failure to prosecute, the required reply may be met by the filing of a continuing application. In an application or patent, abandoned or lapsed for failure to pay the issue fee or any portion thereof, the required reply must be the payment of the issue fee or any outstanding balance thereof.

abandonment or the delay in filing a petition under 37 CFR 1.137 was unintentional, the Director may require additional information. See MPEP 711.03(c)(II)(C) and (D).

The petition lacks items (4) above. Petitioner submitted a terminal disclaimer to obviate a double patenting rejection over a prior patent. 37 CFR 1.137(d) requires a terminal disclaimer dedicating to the public a terminal part of the term of any patent granted thereon equivalent to the period of abandonment of the application. See Form PTO/SB/63 attached. Accordingly, the petition does not comply with the requirements of 37 CFR 1.137(b).

Further correspondence with respect to this matter should be addressed as follows:

By mail: Mail Stop PETITION
Commissioner for Patents
Post Office Box 1450
Alexandria, VA 22313-1450

By hand: U.S. Patent and Trademark Office
Customer Service Window, Mail Stop PETITION
Randolph Building
401 Dulany Street
Alexandria, VA 22314

The centralized facsimile number is **(571) 273-8300**.

Any questions concerning this matter may be directed to the undersigned at (571) 272-3204.

Sherry D. Brinkley
Petitions Examiner
Office of Petitions

Attachment: Terminal Disclaimer to Accompany Petition

PTO/SB/63 (08-08)
Approved for use through 09/30/2008. OMB 0651-0031
U.S. Patent and Trademark Office; U.S. DEPARTMENT OF COMMERCE
Under the Paperwork Reduction Act of 1995, no persons are required to a collection of information unless it displays a valid OMB control number.

TERMINAL DISCLAIMER TO ACCOMPANY PETITION

Docket Number (Optional)

In re Application of:

Name:

Application Number:

Filed:

For:

The owner*, _____ of _____ percent interest in the above-identified application hereby disclaims a terminal part of the term of any patent granted the above-identified application equivalent to: (1) if the above-identified application is a design application, the period of abandonment of the above-identified application, and (2) if the above-identified application is a utility or plant application, the lesser of: (a) the period of abandonment of the application; or (b) the period extending beyond twenty years from the date on which the above-identified application was filed in the United States or, if the application contains a specific reference to an earlier filed application(s) under 35 U.S.C. 120, 121, or 365(c), from the date on which the earliest such application was filed. This disclaimer also applies to any patent granted on a utility or plant application filed before June 8, 1995, or a design application, that contains a specific reference under 35 U.S.C. 120, 121, or 365(c) to the above-identified application. This disclaimer is binding upon the grantee, and its successors or assigns.

Check either box 1 or 2 below, if appropriate.

1. ☐ For submissions on behalf of an organization (e.g., corporation, partnership, university, government agency, etc.), the undersigned is empowered to act on behalf of the organization.
2. ☐ The undersigned is an attorney or agent of record. Registration Number_____.

Signature	Date
Typed or Printed Name	Telephone Number

☐ Terminal disclaimer fee under 37 CFR 1.20(d) included.

WARNING: Information on this form may become public. Credit card information should not be included on this form. Provide credit card information and authorization on PTO-2038.

* Statement under 37 CFR 3.73(b) is required if terminal disclaimer is signed by the assignee (owner). Form PTO/SB/96 may be used for making this certification. See MPEP § 324.

This collection of information is required by 37 CFR 1.137. The information is required to obtain or retain a benefit by the public which is to file (and by the USPTO to process) an application. Confidentiality is governed by 35 U.S.C. 122 and 37 CFR 1.11 and 1.14. This collection is estimated to take 12 minutes to complete, including gathering, preparing, and submitting the completed application form to the USPTO. Time will vary depending upon the individual case. Any comments on the amount of time you require to complete this form and/or suggestions for reducing this burden, should be sent to the Chief Information Officer, U.S. Patent and Trademark Office, U.S. Department of Commerce, P.O. Box 1450, Alexandria, VA 22313-1450. DO NOT SEND FEES OR COMPLETED FORMS TO THIS ADDRESS. **SEND TO: Commissioner for Patents, P.O. Box 1450, Alexandria, VA 22313-1450.**

If you need assistance in completing the form, call 1-800-PTO-9199 and select option 2.

Privacy Act Statement

The **Privacy Act of 1974 (P.L. 93-579)** requires that you be given certain information in connection with your submission of the attached form related to a patent application or patent. Accordingly, pursuant to the requirements of the Act, please be advised that: (1) the general authority for the collection of this information is 35 U.S.C. 2(b)(2); (2) furnishing of the information solicited is voluntary; and (3) the principal purpose for which the information is used by the U.S. Patent and Trademark Office is to process and/or examine your submission related to a patent application or patent. If you do not furnish the requested information, the U.S. Patent and Trademark Office may not be able to process and/or examine your submission, which may result in termination of proceedings or abandonment of the application or expiration of the patent.

The information provided by you in this form will be subject to the following routine uses:

1. The information on this form will be treated confidentially to the extent allowed under the Freedom of Information Act (5 U.S.C. 552) and the Privacy Act (5 U.S.C 552a). Records from this system of records may be disclosed to the Department of Justice to determine whether disclosure of these records is required by the Freedom of Information Act.
2. A record from this system of records may be disclosed, as a routine use, in the course of presenting evidence to a court, magistrate, or administrative tribunal, including disclosures to opposing counsel in the course of settlement negotiations.
3. A record in this system of records may be disclosed, as a routine use, to a Member of Congress submitting a request involving an individual, to whom the record pertains, when the individual has requested assistance from the Member with respect to the subject matter of the record.
4. A record in this system of records may be disclosed, as a routine use, to a contractor of the Agency having need for the information in order to perform a contract. Recipients of information shall be required to comply with the requirements of the Privacy Act of 1974, as amended, pursuant to 5 U.S.C. 552a(m).
5. A record related to an International Application filed under the Patent Cooperation Treaty in this system of records may be disclosed, as a routine use, to the International Bureau of the World Intellectual Property Organization, pursuant to the Patent Cooperation Treaty.
6. A record in this system of records may be disclosed, as a routine use, to another federal agency for purposes of National Security review (35 U.S.C. 181) and for review pursuant to the Atomic Energy Act (42 U.S.C. 218(c)).
7. A record from this system of records may be disclosed, as a routine use, to the Administrator, General Services, or his/her designee, during an inspection of records conducted by GSA as part of that agency's responsibility to recommend improvements in records management practices and programs, under authority of 44 U.S.C. 2904 and 2906. Such disclosure shall be made in accordance with the GSA regulations governing inspection of records for this purpose, and any other relevant (*i.e.*, GSA or Commerce) directive. Such disclosure shall not be used to make determinations about individuals.
8. A record from this system of records may be disclosed, as a routine use, to the public after either publication of the application pursuant to 35 U.S.C. 122(b) or issuance of a patent pursuant to 35 U.S.C. 151. Further, a record may be disclosed, subject to the limitations of 37 CFR 1.14, as a routine use, to the public if the record was filed in an application which became abandoned or in which the proceedings were terminated and which application is referenced by either a published application, an application open to public inspection or an issued patent.
9. A record from this system of records may be disclosed, as a routine use, to a Federal, State, or local law enforcement agency, if the USPTO becomes aware of a violation or potential violation of law or regulation.

UNITED STATES PATENT AND TRADEMARK OFFICE

Commissioner for Patents
United States Patent and Trademark Office
P.O. Box 1450
Alexandria, VA 22313-1450
www.uspto.gov

MILLER, MATTHIAS & HULL
ONE NORTH FRANKLIN STREET
SUITE 2350
CHICAGO, IL 60606

COPY MAILED

JAN 3 0 2009

OFFICE OF PETITIONS

In re Application of Pete Jonathan Myers Application No. 29/250,230 Filed: November 7, 2006 Attorney Docket No. 50012/50009	: : : : :	ON PETITION

This is a decision on the renewed petition under 37 CFR 1.137(b) to revive the above-identified application, filed October 28, 2008.

The petition, as supplemented, is found to be in compliance with the requirements of 37 CFR 1.137(b). Accordingly, the petition is **GRANTED**.

The terminal disclaimer filed October 28, 2008 has been entered and made of record. Any continuing application filed from this application must contain a copy of the terminal disclaimer. The copy of the terminal disclaimer must be filed with a cover letter requesting the terminal disclaimer be recorded on the continuing application. A copy of this decision should be attached to the cover letter.

The application is being referred to the Office of Data Management to be processed into a patent.

Telephone inquires related to this decision should be directed to the undersigned at (571) 272-3204. Telephone inquiries related to processing as a patent should be directed to (571) 272-4200.

Sherry D. Brinkley
Petitions Examiner
Office of Petitions

UNITED STATES PATENT AND TRADEMARK OFFICE

Commissioner for Patents
United States Patent and Trademark Office
P.O. Box 1450
Alexandria, VA 22313-1450
www.uspto.gov

PAUL M. THOMPSON
COCHRN FREUND & YOUNG, LLC
2026 CARIBOU DRIVE, SUITE 201
FORT COLLINS, CO 80525

COPY MAILED

DEC 1 8 2007

OFFICE OF PETITIONS

In re Application of :
Jessica L. Spencer :
Application No. 29/250,258 : DECISION ON PETITION
Filed: November 6, 2006 :
Attorney Docket No. SPEN.01USD1 :

This is a decision on the petition under 37 CFR 1.137(b), filed September 19, 2007, to revive the above-identified design application.

The petition is **DISMISSED**.

Any request for reconsideration of this decision must be submitted within TWO (2) MONTHS from the mail date of this decision. Extensions of time under 37 CFR 1.136(a) are permitted. The reconsideration request should include a cover letter entitled "Renewed Petition under 37 CFR 1.137(b)." This is **not** a final agency action within the meaning of 5 U.S.C. § 704.

The application became abandoned for failure to timely pay the issue fee on or before July 10, 2007, as required by the Notice of Allowance and Fee(s) Due, mailed April 10, 2007, which set a statutory period for reply of three (3) months. Accordingly, the application became abandoned on July 11, 2007. A Notice of Abandonment was mailed on August 6, 2007.

A grantable petition under 37 CFR 1.137(b) must be accompanied by: (1) the required reply, unless previously filed; (2) the petition fee as set forth in 37 CFR 1.17(m); (3) a statement that the entire delay in filing the required reply from the due date for the reply until the filing of a grantable petition pursuant to 37 CFR 1.137(b) was unintentional; and (4) any terminal disclaimer (and fee as set forth in 37 CFR 1.20(d)) required by 37 CFR 1.137(d). Where there is a question as to whether either the abandonment or the delay in filing a petition under 37 CFR 1.137 was unintentional, the Director may require additional information. *See* MPEP 711.03(c)(II)(C) and (D).

The instant petition lacks item (1). In this regard, this application cannot be revived until such time as the issue fee has been paid. The issue fee due now is $410. Accordingly, before revival of this application can be effected, the $410 issue fee must be submitted.

As petitioner states that the Notices mailed on April 10, 2007 were not received, a copy thereof accompanies this decision on petition. The Part B - Fee(s) Transmittal form should be completed and returned with the renewed petition under 37 CFR 1.137(b). No additional petition fee is required.

Petitioner may access this application on PAIR to view any other documents which may not have been received.

Further correspondence with respect to this matter should be addressed as follows:

By Mail: Mail Stop PETITION
Commissioner for Patents
P. O. Box 1450
Alexandria, VA 22313-1450

By hand: U. S. Patent and Trademark Office
Customer Service Window, Mail Stop Petitions
Randolph Building
401 Dulany Street
Alexandria, VA 22314

The centralized facsimile number is **(571) 273-8300.**

Correspondence regarding this decision may also be filed through the electronic filing system of the USPTO.

Telephone inquiries concerning this decision should be directed to the undersigned at (571) 272-3218.

Frances Hicks
Petitions Examiner
Office of Petitions

ATTACHMENTS: Notices mailed April 10, 2007

UNITED STATES PATENT AND TRADEMARK OFFICE

UNITED STATES DEPARTMENT OF COMMERCE
United States Patent and Trademark Office
Address: COMMISSIONER FOR PATENTS
P.O. Box 1450
Alexandria, Virginia 22313-1450
www.uspto.gov

NOTICE OF ALLOWANCE AND FEE(S) DUE

27279 7590 04/10/2007

RENE ANCTIL
P.O. BOX 1496
NORTH KINGSTOWN, RI 02852

EXAMINER
OSWECKI, ELIZABETH J

ART UNIT	PAPER NUMBER
2912	

DATE MAILED: 04/10/2007

APPLICATION NO.	FILING DATE	FIRST NAMED INVENTOR	ATTORNEY DOCKET NO.	CONFIRMATION NO.
29/250,258	11/08/2006	Jessica L. Spencer	SPEN.01USD1	1810

TITLE OF INVENTION: HOLIDAY ORNAMENT HANGER ASSEMBLY

APPLN. TYPE	SMALL ENTITY	ISSUE FEE DUE	PUBLICATION FEE DUE	PREV. PAID ISSUE FEE	TOTAL FEE(S) DUE	DATE DUE
nonprovisional	YES	$400	$0	$0	$400	07/10/2007

THE APPLICATION IDENTIFIED ABOVE HAS BEEN EXAMINED AND IS ALLOWED FOR ISSUANCE AS A PATENT. PROSECUTION ON THE MERITS IS CLOSED. THIS NOTICE OF ALLOWANCE IS NOT A GRANT OF PATENT RIGHTS. THIS APPLICATION IS SUBJECT TO WITHDRAWAL FROM ISSUE AT THE INITIATIVE OF THE OFFICE OR UPON PETITION BY THE APPLICANT. SEE 37 CFR 1.313 AND MPEP 1308.

THE ISSUE FEE AND PUBLICATION FEE (IF REQUIRED) MUST BE PAID WITHIN THREE MONTHS FROM THE MAILING DATE OF THIS NOTICE OR THIS APPLICATION SHALL BE REGARDED AS ABANDONED. THIS STATUTORY PERIOD CANNOT BE EXTENDED. SEE 35 U.S.C. 151. THE ISSUE FEE DUE INDICATED ABOVE DOES NOT REFLECT A CREDIT FOR ANY PREVIOUSLY PAID ISSUE FEE IN THIS APPLICATION. IF AN ISSUE FEE HAS PREVIOUSLY BEEN PAID IN THIS APPLICATION (AS SHOWN ABOVE), THE RETURN OF PART B OF THIS FORM WILL BE CONSIDERED A REQUEST TO REAPPLY THE PREVIOUSLY PAID ISSUE FEE TOWARD THE ISSUE FEE NOW DUE.

HOW TO REPLY TO THIS NOTICE:

I. Review the SMALL ENTITY status shown above.

If the SMALL ENTITY is shown as YES, verify your current SMALL ENTITY status:

A. If the status is the same, pay the TOTAL FEE(S) DUE shown above.

B. If the status above is to be removed, check box 5b on Part B - Fee(s) Transmittal and pay the PUBLICATION FEE (if required) and twice the amount of the ISSUE FEE shown above, or

If the SMALL ENTITY is shown as NO:

A. Pay TOTAL FEE(S) DUE shown above, or

B. If applicant claimed SMALL ENTITY status before, or is now claiming SMALL ENTITY status, check box 5a on Part B - Fee(s) Transmittal and pay the PUBLICATION FEE (if required) and 1/2 the ISSUE FEE shown above.

II. PART B - FEE(S) TRANSMITTAL, or its equivalent, must be completed and returned to the United States Patent and Trademark Office (USPTO) with your ISSUE FEE and PUBLICATION FEE (if required). If you are charging the fee(s) to your deposit account, section "4b" of Part B - Fee(s) Transmittal should be completed and an extra copy of the form should be submitted. If an equivalent of Part B is filed, a request to reapply a previously paid issue fee must be clearly made, and delays in processing may occur due to the difficulty in recognizing the paper as an equivalent of Part B.

III. All communications regarding this application must give the application number. Please direct all communications prior to issuance to Mail Stop ISSUE FEE unless advised to the contrary.

IMPORTANT REMINDER: Utility patents issuing on applications filed on or after Dec. 12, 1980 may require payment of maintenance fees. It is patentee's responsibility to ensure timely payment of maintenance fees when due.

PTOL-85 (Rev. 07/06) Approved for use through 04/30/2007.

PART B - FEE(S) TRANSMITTAL

Complete and send this form, together with applicable fee(s), to: Mail **Mail Stop ISSUE FEE**
Commissioner for Patents
P.O. Box 1450
Alexandria, Virginia 22313-1450
or Fax (571)-273-2885

INSTRUCTIONS: This form should be used for transmitting the ISSUE FEE and PUBLICATION FEE (if required). Blocks 1 through 5 should be completed where appropriate. All further correspondence including the Patent, advance orders and notification of maintenance fees will be mailed to the current correspondence address as indicated unless corrected below or directed otherwise in Block 1, by (a) specifying a new correspondence address; and/or (b) indicating a separate "FEE ADDRESS" for maintenance fee notifications.

CURRENT CORRESPONDENCE ADDRESS (Note: Use Block 1 for any change of address)

27279 7590 04/10/2007

RENE ANCTIL
P.O. BOX 1496
NORTH KINGSTOWN, RI 02852

Note: A certificate of mailing can only be used for domestic mailings of the Fee(s) Transmittal. This certificate cannot be used for any other accompanying papers. Each additional paper, such as an assignment or formal drawing, must have its own certificate of mailing or transmission.

Certificate of Mailing or Transmission
I hereby certify that this Fee(s) Transmittal is being deposited with the United States Postal Service with sufficient postage for first class mail in an envelope addressed to the Mail Stop ISSUE FEE address above, or being facsimile transmitted to the USPTO (571) 273-2885, on the date indicated below.

(Depositor's name)
(Signature)
(Date)

APPLICATION NO.	FILING DATE	FIRST NAMED INVENTOR	ATTORNEY DOCKET NO.	CONFIRMATION NO.
29/250,258	11/08/2006	Jessica L. Spencer	SPEN.01USD1	1810

TITLE OF INVENTION: HOLIDAY ORNAMENT HANGER ASSEMBLY

APPLN. TYPE	SMALL ENTITY	ISSUE FEE DUE	PUBLICATION FEE DUE	PREV. PAID ISSUE FEE	TOTAL FEE(S) DUE	DATE DUE
nonprovisional	YES	$400	$0	$0	$400	07/10/2007

EXAMINER	ART UNIT	CLASS-SUBCLASS
OSWECKI, ELIZABETH J	2912	D11-130000

1. Change of correspondence address or indication of "Fee Address" (37 CFR 1.363).

☐ Change of correspondence address (or Change of Correspondence Address form PTO/SB/122) attached.

☐ "Fee Address" indication (or "Fee Address" Indication form PTO/SB/47; Rev 03-02 or more recent) attached. **Use of a Customer Number is required.**

2. For printing on the patent front page, list

(1) the names of up to 3 registered patent attorneys or agents OR, alternatively,

(2) the name of a single firm (having as a member a registered attorney or agent) and the names of up to 2 registered patent attorneys or agents. If no name is listed, no name will be printed.

1 _____
2 _____
3 _____

3. ASSIGNEE NAME AND RESIDENCE DATA TO BE PRINTED ON THE PATENT (print or type)

PLEASE NOTE: Unless an assignee is identified below, no assignee data will appear on the patent. If an assignee is identified below, the document has been filed for recordation as set forth in 37 CFR 3.11. Completion of this form is NOT a substitute for filing an assignment.

(A) NAME OF ASSIGNEE (B) RESIDENCE: (CITY and STATE OR COUNTRY)

Please check the appropriate assignee category or categories (will not be printed on the patent) : ☐ Individual ☐ Corporation or other private group entity ☐ Government

4a. The following fee(s) are submitted:

☐ Issue Fee
☐ Publication Fee (No small entity discount permitted)
☐ Advance Order - # of Copies _____

4b. Payment of Fee(s): **(Please first reapply any previously paid issue fee shown above)**

☐ A check is enclosed.
☐ Payment by credit card. Form PTO-2038 is attached.
☐ The Director is hereby authorized to charge the required fee(s), any deficiency, or credit any overpayment, to Deposit Account Number _____ (enclose an extra copy of this form).

5. **Change in Entity Status** (from status indicated above)

☐ a. Applicant claims SMALL ENTITY status. See 37 CFR 1.27. ☐ b. Applicant is no longer claiming SMALL ENTITY status. See 37 CFR 1.27(g)(2).

NOTE: The Issue Fee and Publication Fee (if required) will not be accepted from anyone other than the applicant; a registered attorney or agent; or the assignee or other party in interest as shown by the records of the United States Patent and Trademark Office.

Authorized Signature _____ Date _____

Typed or printed name _____ Registration No. _____

This collection of information is required by 37 CFR 1.311. The information is required to obtain or retain a benefit by the public which is to file (and by the USPTO to process) an application. Confidentiality is governed by 35 U.S.C. 122 and 37 CFR 1.14. This collection is estimated to take 12 minutes to complete, including gathering, preparing, and submitting the completed application form to the USPTO. Time will vary depending upon the individual case. Any comments on the amount of time you require to complete this form and/or suggestions for reducing this burden, should be sent to the Chief Information Officer, U.S. Patent and Trademark Office, U.S. Department of Commerce, P.O. Box 1450, Alexandria, Virginia 22313-1450. DO NOT SEND FEES OR COMPLETED FORMS TO THIS ADDRESS. SEND TO: Commissioner for Patents, P.O. Box 1450, Alexandria, Virginia 22313-1450.

Under the Paperwork Reduction Act of 1995, no persons are required to respond to a collection of information unless it displays a valid OMB control number.

UNITED STATES PATENT AND TRADEMARK OFFICE

UNITED STATES DEPARTMENT OF COMMERCE
United States Patent and Trademark Office
Address: COMMISSIONER FOR PATENTS
P.O. Box 1450
Alexandria, Virginia 22313-1450
www.uspto.gov

APPLICATION NO.	FILING DATE	FIRST NAMED INVENTOR	ATTORNEY DOCKET NO.	CONFIRMATION NO.
29/250,258	11/08/2006	Jessica L. Spencer	SPEN.01USD1	1810

27279 7590 04/10/2007

RENE ANCTIL
P.O. BOX 1496
NORTH KINGSTOWN, RI 02852

EXAMINER
OSWECKI, ELIZABETH J

ART UNIT	PAPER NUMBER
2912	

DATE MAILED: 04/10/2007

Determination of Patent Term Extension or Adjustment under 35 U.S.C. 154 (b)

Design patents have a term measured from the issue date of the patent and the term remains the same length regardless of the time that the application for the design patent was pending. Since the above-identified application is an application for a design patent, the patent is not eligible for Patent Term Extension or Adjustment under 35 U.S.C. 154(b).

Any questions regarding the Patent Term Extension or Adjustment determination should be directed to the Office of Patent Legal Administration at (571)-272-7702. Questions relating to issue and publication fee payments should be directed to the Customer Service Center of the Office of Patent Publication at 1-(888)-786-0101 or (571)-272-4200.

PTOL-85 (Rev. 07/06) Approved for use through 04/30/2007.

Notice of Allowability For A Design Application	Application No. 29/250,258	Applicant(s) SPENCER, JESSICA L.
	Examiner Elizabeth J. Oswecki	Art Unit 2912

-- The MAILING DATE of this communication appears on the cover sheet with the correspondence address--

All claims being allowable, PROSECUTION ON THE MERITS IS (OR REMAINS) CLOSED in this application. If not included herewith (or previously mailed), a Notice of Allowance (PTOL-85) or other appropriate communication will be mailed in due course. **THIS NOTICE OF ALLOWABILITY IS NOT A GRANT OF PATENT RIGHTS.** This application is subject to withdrawal from issue at the initiative of the Office or upon petition by the applicant. See 37 CFR 1.313 and MPEP 1308.

1. ☐ This communication is responsive to _____.

2. ☒ The claim is allowed.

3. ☒ Acceptable drawings:

   (a) ☒ The drawings filed on 08 November 2006 are accepted by the Examiner.

   (b) ☐ Drawing Figures filed on _____ and drawing Figures filed on _____ are accepted by the Examiner.

4. ☐ The claim for foreign priority under 35 U.S.C. § 119(a)-(d) or (f) is acknowledged.

   a) ☐ All b) ☐ Some* c) ☐ None of the:

   1. ☐ Certified copies of the priority documents have been received.
   2. ☐ Certified copies of the priority documents have been received in Application No. _____.
   3. ☐ Copies of the certified copies of the priority documents have been received in this national stage application from the International Bureau (PCT Rule 17.2(a)).

   * Certified copies not received: _____.

Applicant has THREE MONTHS FROM THE "MAILING DATE" of this communication to file a reply complying with the requirements noted below. Failure to timely comply will result in ABANDONMENT of this application.
THIS THREE-MONTH PERIOD IS NOT EXTENDABLE.

5. ☐ A SUBSTITUTE OATH OR DECLARATION must be submitted. Note the attached EXAMINER'S AMENDMENT or NOTICE OF INFORMAL PATENT APPLICATION (PTO-152) which gives reason(s) why the oath or declaration is deficient.

6. ☐ CORRECTED DRAWINGS (as "replacement sheets") must be submitted.

   (a) ☐ including changes required by the Notice of Draftsperson's Patent Drawing Review (PTO-948) attached

   1) ☐ hereto or 2) ☐ to Paper No./Mail Date _____.

   (b) ☐ including changes required by the attached Examiner's Amendment / Comment or in the Office action of Paper No./Mail Date _____.

Identifying indicia such as the application number (see 37 CFR 1.84(c)) should be written on the drawings in the front (not the back) of each sheet. Replacement sheet(s) should be labeled as such in the header according to 37 CFR 1.121(d).

Attachment(s)

1. ☒ Notice of References Cited (PTO-892)
2. ☐ Notice of Draftperson's Patent Drawing Review (PTO-948)
3. ☒ Information Disclosure Statements (PTO/SB/08), Paper No./Receipt Date 20070308, 20070308
5. ☐ Notice of Informal Patent Application
6. ☐ Interview Summary (PTO-413), Paper No./Mail Date _____.
7. ☒ Examiner's Amendment/Comment
8. ☐ Examiner's Statement of Reasons for Allowance
9. ☐ Other _____.

NOTE:

DETAILED ACTION

EXAMINER'S AMENDMENT

An examiner's amendment to the record appears below. No further correspondence with the examiner is needed unless the changes and/or additions are unacceptable to applicant. Should the changes and/or additions be unacceptable to applicant, an amendment may be filed as provided by 37 CFR 1.312. To ensure consideration of such an amendment, it MUST be submitted no later than the payment of the issue fee.

Claim

For proper form (37 CFR 1.153), the claim must be amended to read:

--"I claim:

The ornamental design for Holiday Ornament Hanger Assembly as shown and described."--

Information Disclosure Statement

The information disclosure statement filed on March 8, 2007 does not fully comply with the requirements of 37 CFR 1.98(b) because: two IDS had been submitted that are exact duplicates on the same date. Since the submission appears to be *bona fide*, applicant is given **ONE (1) MONTH** from the date of this notice to supply the above mentioned omissions or corrections in the information disclosure statement. NO EXTENSION OF THIS TIME LIMIT MAY BE GRANTED UNDER EITHER 37 CFR 1.136(a) OR (b). Failure to timely comply with this notice will result in the above mentioned information disclosure statement being placed in the application file with the noncomplying information **not** being considered. See 37 CFR 1.97(i).

Contact Information

Any inquiry concerning this communication or earlier communications from the examiner should be directed to Elizabeth J. Oswecki whose telephone number is 571-272-4335. The examiner can normally be reached on 8:30-5pm ET.

If attempts to reach the examiner by telephone are unsuccessful, the examiner's supervisor, Stella Reid can be reached on 571-272-2656. The fax phone number for the organization where this application or proceeding is assigned is 571-273-8300.

Information regarding the status of an application may be obtained from the Patent Application Information Retrieval (PAIR) system. Status information for published applications may be obtained from either Private PAIR or Public PAIR. Status information for unpublished applications is available through Private PAIR only. For more information about the PAIR system, see http://pair-direct.uspto.gov. Should you have questions on access to the Private PAIR system, contact the Electronic Business Center (EBC) at 866-217-9197 (toll-free). If you would like assistance from a USPTO Customer Service Representative or access to the automated information system, call 800-786-9199 (IN USA OR CANADA) or 571-272-1000.

EJO

Stella Reid
SUPERVISORY DESIGN EXAMINER

PTO/SB/08a (08-03)
Approved for use through 07/31/2006. OMB 0651-0031
U.S. Patent and Trademark Office; U.S. DEPARTMENT OF COMMERCE
Under the Paperwork Reduction Act of 1995, no persons are required to respond to a collection of information unless it contains a valid OMB control number.

INFORMATION DISCLOSURE STATEMENT BY APPLICANT

(Not for submission under 37 CFR 1.99)

Application Number	29250258
Filing Date	2006-11-15
First Named Inventor	Spencer
Art Unit	
Examiner Name	
Attorney Docket Number	SPEN.01USD1

U.S.PATENTS

Examiner Initial*	Cite No	Patent Number	Kind Code[1]	Issue Date	Name of Patentee or Applicant of cited Document	Pages,Columns,Lines where Relevant Passages or Relevant Figures Appear
/EO/	1	0896990		1908-08-25	Hill, M. E.	
/EO/	2	3131112		1964-04-28	Abramson	
/EO/	3	4076126		1978-02-28	Gilmor	
/EO/	4	4184660		1980-01-22	Anderson	
/EO/	5	4421801		1983-12-20	Wahlfahrt	
/EO/	6	4496615		1985-01-29	Huang	
/EO/	7	4548328		1985-10-22	Brauning	
/EO/	8	4592473		1986-06-03	Efrom	

INFORMATION DISCLOSURE STATEMENT BY APPLICANT (Not for submission under 37 CFR 1.99)		
	Application Number	29250258
	Filing Date	2006-11-15
	First Named Inventor	Spencer
	Art Unit	
	Examiner Name	
	Attorney Docket Number	SPEN.01USD1

/EO/	9	5106661		1992-04-21	Pitts, Sr.	
/EO/	10	5310151		1994-05-00	Engel, Stephen J.	
/EO/	11	5634619		1997-06-03	Alessi	
/EO/	12	D391706		1998-03-03	Malcolm	
/EO/	13	5735415		1998-04-07	Wilson	
/EO/	14	5906284		1999-05-25	Hammerstrom et al.	
/EO/	15	6029396		2000-02-29	Gillingham	
/EO/	16	6186792		2001-02-00	Discko, John J.	
/EO/	17	6293035		2001-09-25	LaPointe	
/EO/	18	6315256		2001-11-13	Tolar	
/EO/	19	6318572		2001-11-20	Lai, Yung Lin	

INFORMATION DISCLOSURE STATEMENT BY APPLICANT (Not for submission under 37 CFR 1.99)	Application Number	29250258
	Filing Date	2006-11-15
	First Named Inventor	Spencer
	Art Unit	
	Examiner Name	
	Attorney Docket Number	SPEN.01USD1

/EO/	20	6508446		2003-01-21	Addison et al.	
/EO/	21	6568546		2003-05-27	Huang	
/EO/	22	6843456		2005-01-00	Hajianpour, Zoya	

If you wish to add additional U.S. Patent citation information please click the Add button.

U.S.PATENT APPLICATION PUBLICATIONS

Examiner Initial*	Cite No	Publication Number	Kind Code[1]	Publication Date	Name of Patentee or Applicant of cited Document	Pages,Columns,Lines where Relevant Passages or Relevant Figures Appear
/EO/	1	20020195529		2002-12-26	Vanech	
/EO/	2	20030089830		2003-05-15	Loughman	

If you wish to add additional U.S. Published Application citation information please click the Add button.

FOREIGN PATENT DOCUMENTS

Examiner Initial*	Cite No	Foreign Document Number[3]	Country Code[2]	Kind Code[4]	Publication Date	Name of Patentee or Applicant of cited Document	Pages,Columns,Lines where Relevant Passages or Relevant Figures Appear	T[5]
	1							☐

If you wish to add additional Foreign Patent Document citation information please click the Add button

NON-PATENT LITERATURE DOCUMENTS

Examiner Initials*	Cite No	Include name of the author (in CAPITAL LETTERS), title of the article (when appropriate), title of the item (book, magazine, journal, serial, symposium, catalog, etc), date, pages(s), volume-issue number(s), publisher, city and/or country where published.	T[5]

INFORMATION DISCLOSURE STATEMENT BY APPLICANT (Not for submission under 37 CFR 1.99)		
	Application Number	29250258
	Filing Date	2006-11-15
	First Named Inventor	Spencer
	Art Unit	
	Examiner Name	
	Attorney Docket Number	SPEN.01USD1

	1		☐

If you wish to add additional non-patent literature document citation information please click the Add button

EXAMINER SIGNATURE

Examiner Signature	/Elizabeth Oswecki/	Date Considered	03/27/2007

*EXAMINER: Initial if reference considered, whether or not citation is in conformance with MPEP 609. Draw line through a citation if not in conformance and not considered. Include copy of this form with next communication to applicant.

[1] See Kind Codes of USPTO Patent Documents at www.USPTO.GOV or MPEP 901.04. [2] Enter office that issued the document, by the two-letter code (WIPO Standard ST.3). [3] For Japanese patent documents, the indication of the year of the reign of the Emperor must precede the serial number of the patent document. [4] Kind of document by the appropriate symbols as indicated on the document under WIPO Standard ST.16 if possible. [5] Applicant is to place a check mark here if English language translation is attached.

PTO/SB/08a (08-03)
Approved for use through 07/31/2006. OMB 0651-0031
U.S. Patent and Trademark Office; U.S. DEPARTMENT OF COMMERCE
Under the Paperwork Reduction Act of 1995, no persons are required to respond to a collection of information unless it contains a valid OMB control number.

INFORMATION DISCLOSURE STATEMENT BY APPLICANT (Not for submission under 37 CFR 1.99)		
	Application Number	29250258
	Filing Date	2006-11-08
	First Named Inventor	Spencer
	Art Unit	
	Examiner Name	
	Attorney Docket Number	SPEN.01USD1

U.S.PATENTS

Examiner Initial*	Cite No	Patent Number	Kind Code[1]	Issue Date	Name of Patentee or Applicant of cited Document	Pages,Columns,Lines where Relevant Passages or Relevant Figures Appear
	1	0896990		1908-08-25	Hill, M. E.	
	2	3131112		1964-04-28	Abramson	
	3	4076126		1978-02-28	Gilmor	
	4	4184660		1980-01-22	Anderson	
	5	4421801		1983-12-20	Wahlfahrt	
	6	4496615		1985-01-29	Huang	
	7	4548328		1985-10-22	Brauning	
	8	4592473		1986-06-03	Efrom	

DUPLICATE

INFORMATION DISCLOSURE STATEMENT BY APPLICANT (Not for submission under 37 CFR 1.99)		
	Application Number	29250258
	Filing Date	2006-11-08
	First Named Inventor	Spencer
	Art Unit	
	Examiner Name	
	Attorney Docket Number	SPEN.01USD1

DUPLICATE

	9	5108661		1992-04-21	Pitts, Sr.	
	10	5310151		1994-05-00	Engel, Stephen J.	
	11	5634619		1997-06-03	Alessi	
	12	D391706		1998-03-03	Malcolm	
	13	5735415		1998-04-07	Wilson	
	14	5906284		1999-05-25	Hammerstrom et al.	
	15	6029396		2000-02-29	Gillingham	
	16	6186792		2001-02-00	Discko, John J.	
	17	6293035		2001-09-25	LePointe	
	18	6315256		2001-11-13	Tolar	
	19	6318572		2001-11-20	Lai, Yung Lin	

INFORMATION DISCLOSURE STATEMENT BY APPLICANT (Not for submission under 37 CFR 1.99)	Application Number	29250258
	Filing Date	2006-11-08
	First Named Inventor	Spencer
	Art Unit	
	Examiner Name	
	Attorney Docket Number	SPEN-01USD1

	20	6568446		2003-01-21	Addison et al.	
	21	6568546		2003-05-27	Huang	
	22	6848456		2005-01-00	Hajianpour, Zoya	

DUPLICATE

If you wish to add additional U.S. Patent citation information please click the Add button.

U.S.PATENT APPLICATION PUBLICATIONS

Examiner Initial*	Cite No	Publication Number	Kind Code[1]	Publication Date	Name of Patentee or Applicant of cited Document	Pages,Columns,Lines where Relevant Passages or Relevant Figures Appear
	1	20020195529		2002-12-26	Vanech	
	2	20030089830		2003-05-15	Loughman	

DUPLICATE

If you wish to add additional U.S. Published Application citation information please click the Add button.

FOREIGN PATENT DOCUMENTS

Examiner Initial*	Cite No	Foreign Document Number[3]	Country Code[2] i	Kind Code[4]	Publication Date	Name of Patentee or Applicant of cited Document	Pages,Columns,Lines where Relevant Passages or Relevant Figures Appear	T[5]
	1							☐

If you wish to add additional Foreign Patent Document citation information please click the Add button

NON-PATENT LITERATURE DOCUMENTS

Examiner Initials*	Cite No	Include name of the author (in CAPITAL LETTERS), title of the article (when appropriate), title of the item (book, magazine, journal, serial, symposium, catalog, etc), date, pages(s), volume-issue number(s), publisher, city and/or country where published.	T[5]

INFORMATION DISCLOSURE STATEMENT BY APPLICANT (Not for submission under 37 CFR 1.99)	Application Number	29250258
	Filing Date	2006-11-08
	First Named Inventor	Spencer
	Art Unit	
	Examiner Name	
	Attorney Docket Number	SPEN.01USD1

	1		☐

If you wish to add additional non-patent literature document citation information please click the Add button

EXAMINER SIGNATURE

Examiner Signature	/Elizabeth Oswecki/	Date Considered	03/27/2007

*EXAMINER: Initial if reference considered, whether or not citation is in conformance with MPEP 609. Draw line through a citation if not in conformance and not considered. Include copy of this form with next communication to applicant.

[1] See Kind Codes of USPTO Patent Documents at www.USPTO.GOV or MPEP 901.04. [2] Enter office that issued the document, by the two-letter code (WIPO Standard ST.3). [3] For Japanese patent documents, the indication of the year of the reign of the Emperor must precede the serial number of the patent document. [4] Kind of document by the appropriate symbols as indicated on the document under WIPO Standard ST.16 if possible. [5] Applicant is to place a check mark here if English language translation is attached.

UNITED STATES PATENT AND TRADEMARK OFFICE

UNITED STATES DEPARTMENT OF COMMERCE
United States Patent and Trademark Office
Address: COMMISSIONER FOR PATENTS
P.O. Box 1450
Alexandria, Virginia 22313-1450
www.uspto.gov

APPLICATION NO.	FILING DATE	FIRST NAMED INVENTOR	ATTORNEY DOCKET NO.	CONFIRMATION NO.
29/250,258	11/08/2006	Jessica L. Spencer	SPEN.01USD1	1810

27279 7590 08/06/2007
RENE ANCTIL
P.O. BOX 1496
NORTH KINGSTOWN, RI 02852

EXAMINER
OSWECKI, ELIZABETH J

ART UNIT	PAPER NUMBER
2912	

MAIL DATE	DELIVERY MODE
08/06/2007	PAPER

Please find below and/or attached an Office communication concerning this application or proceeding.

The time period for reply, if any, is set in the attached communication.

Notice of Abandonment	Application No.	Applicant(s)	
	29/250,258	Jessica L. Spencer	
	Examiner	Art Unit	
	OSWECKI, ELIZABETH J	2912	

– The MAILING DATE of this communication appears on the cover sheet with the correspondence address–

This application is abandoned in view of:

1. ☐ Applicant's failure to timely file a proper reply to the Office letter mailed on _____.
   (a) ☐ A reply was received on _____ (with a Certificate of Mailing or Transmission dated _____), which is after the expiration of the period for reply (including a total extension of time of _____ month(s)) which expired on _____.
   (b) ☐ A proposed reply was received on _____, but it does not constitute a proper reply under 37 CFR 1.113 (a) to the final rejection.
   (A proper reply under 37 CFR 1.113 to a final rejection consists only of: (1) a timely filed amendment which places the application in condition for allowance; (2) a timely filed Notice of Appeal (with appeal fee); or (3) a timely filed Request for Continued Examination (RCE) in compliance with 37 CFR 1.114).
   (c) ☐ A reply was received on _____ but it does not constitute a proper reply, or a bona fide attempt at a proper reply, to the non-final rejection. See 37 CFR 1.85(a) and 1.111. (See explanation in box 7 below).
   (d) ☐ No reply has been received.

2. ☒ Applicant's failure to timely pay the required issue fee and publication fee, if applicable, within the statutory period of three months from the mailing date of the Notice of Allowance (PTOL-85).
   (a) ☐ The issue fee and publication fee, if applicable, was received on _____ (with a Certificate of Mailing or Transmission dated _____), which is after the expiration of the statutory period for payment of the issue fee (and publication fee) set in the Notice of Allowance (PTOL-85).
   (b) ☐ The submitted fee of $_____ is insufficient. A balance of $_____ is due.
   The issue fee required by 37 CFR 1.18 is $_____. The publication fee, if required by 37 CFR 1.18(d), is $_____.
   (c) ☒ The issue fee and publication fee, if applicable, has not been received.

3. ☐ Applicant's failure to timely file corrected drawings as required by, and within the three-month period set in, the Notice of Allowability (PTO-37).
   (a) ☐ Proposed corrected drawings were received on _____ (with a Certificate of Mailing or Transmission dated _____), which is after the expiration of the period for reply.
   (b) ☐ No corrected drawings have been received.

4. ☐ The letter of express abandonment which is signed by the attorney or agent of record, the assignee of the entire interest, or all of the applicants.

5. ☐ The letter of express abandonment which is signed by an attorney or agent (acting in a representative capacity under 37 CFR 1.34(a)) upon the filing of a continuing application.

6. ☐ The decision by the Board of Patent Appeals and Interference rendered on _____ and because the period for seeking court review of the decision has expired and there are no allowed claims.

7. ☐ The reason(s) below:

/AG/

Petitions to revive under 37 CFR 1.137(a) or (b), or requests to withdraw the holding of abandonment under 37 CFR 1.181, should be promptly filed to minimize any negative effects on patent term.

Notice of References Cited	Application/Control No. 29/250,258	Applicant(s)/Patent Under Reexamination SPENCER, JESSICA L.	
	Examiner Elizabeth J. Oswecki	Art Unit 2912	Page 1 of 1

U.S. PATENT DOCUMENTS

*		Document Number Country Code-Number-Kind Code	Date MM-YYYY	Name	Classification
*	A	US-D244,903	07-1977	Hildebrand, Oliver W.	D7/683
*	B	US-D263,548	03-1982	Rodgers et al.	D8/4
*	C	US-D287,328	12-1986	Paul et al.	D8/1
*	D	US-D450,801	11-2001	Fundak, Ronald	D22/121
*	E	US-D484,283	12-2003	Lam, Man Kuen	D30/153
*	F	US-2,610,884	09-1952	HERMAN ENDERLE; et. al.	294/15
*	G	US-5,870,845	02-1999	Ruderman et al.	40/601
*	H	US-2005/0247837	11-2005	Spencer, Jessica L.	248/218.4
	I	US-			
	J	US-			
	K	US-			
	L	US-			
	M	US-			

FOREIGN PATENT DOCUMENTS

*		Document Number Country Code-Number-Kind Code	Date MM-YYYY	Country	Name	Classification
	N					
	O					
	P					
	Q					
	R					
	S					
	T					

NON-PATENT DOCUMENTS

*		Include as applicable: Author, Title Date, Publisher, Edition or Volume, Pertinent Pages)
	U	
	V	
	W	
	X	

*A copy of this reference is not being furnished with this Office action. (See MPEP § 707.05(a).)
Dates in MM-YYYY format are publication dates. Classifications may be US or foreign.

UNITED STATES PATENT AND TRADEMARK OFFICE

Commissioner for Patents
United States Patent and Trademark Office
P.O. Box 1450
Alexandria, VA 22313-1450
www.uspto.gov

COCHRAN FREUND & YOUNG LLC
2026 CARIBOU DR
SUITE 201
FORT COLLINS CO 80525

COPY MAILED

MAY 19 2008

In re Application of	:	
Jessica L. Spencer	:	
Application No. 29/250,258	:	ON PETITION
Filed: November 8, 2006	:	
Attorney Docket No. SPEN.01USD1	:	

This is a decision on the Renewed petition under 37 CFR 1.137(b), filed January 14, 2008, to revive the above-identified application.

The petition is **GRANTED**.

The above-identified application became abandoned for failure to pay the issue fee in a timely manner in reply to the Notice of Allowance/Allowability mailed April 10, 2007, which set a statutory period for reply of three (3) months. Accordingly, by operation of law, the above-identified application became abandoned on July 11, 2007.

The petition decision mailed December 18, 2007 dismissed the petition filed September 19, 2007, noting that the requirements of 37 CFR 1.137(b)(1) the issue fee was lacking.

The instant renewed petition includes the issue fee payment.

The petition satisfies the conditions for revival pursuant to the provisions of 37 CFR 1.137(b) in that (1) the reply in the form of the issue fee; (2) the petition fee of $750; (3) the required statement of unintentional delay; and (4) the terminal disclaimer and fee have been received. Accordingly, the issue fee is accepted as having been unintentionally delayed.

Telephone inquiries concerning this decision should be directed to Carl Friedman at (571) 272-6842.

The application file is being referred to the Office of Data Management.

for David Bucci
Petitions Examiner
Office of Petitions

UNITED STATES PATENT AND TRADEMARK OFFICE

Commissioner for Patents
United States Patent and Trademark Office
P.O. Box 1450
Alexandria, VA 22313-1450
www.uspto.gov

EGBERT LAW OFFICES
412 MAIN STREET, 7TH FLOOR
HOUSTON TX 77002

COPY MAILED

AUG 0 4 2008

In re Application of	:	
Kuei-Chih HSU	:	
Application No. 29/250,276	:	DECISION ON PETITION
Filed: November 08, 2006	:	
Attorney Docket No. 1980-43	:	

This is a decision on the petition under 37 CFR 1.137(b), filed June 10, 2008, to revive the above-identified design application.

The petition is **GRANTED**.

This application became abandoned for failure to timely pay the issue fee and to submit corrected formal drawings on or before January 07, 2008, as required by the Notice of Allowance and Fee(s) Due and the Notice of Allowability, mailed October 05, 2007. Accordingly, the date of abandonment of this application is January 08, 2008.

The petition satisfies the requirements of 37 CFR 1.137(b) in that petitioner has supplied (1) the reply in the form of payment of the issue fee of $410.00 and corrected formal drawings; (2) the petition fee of $770.00; (3) a proper statement of unintentional delay; and(4) a terminal disclaimer and fee as required by 37 CFR 1.137(d). Accordingly, the failure to timely pay the issue fee as required by the Notice of Allowance is accepted as being unintentionally delayed.

The terminal disclaimer is accepted and has been made of record. Any continuing application filed from this application must contain a copy of the terminal disclaimer. The copy of the terminal disclaimer must be filed with a cover letter requesting the terminal disclaimer be recorded on the continuing application. A copy of this decision should be attached to the cover letter.

Telephone inquiries concerning this decision should be directed to Michelle R. Eason at (571) 272-4231.

This application is being referred to Office of Data Management.

Michelle R. Eason
Paralegal Specialist
Office of Petitions

UNITED STATES PATENT AND TRADEMARK OFFICE

Commissioner for Patents
United States Patent and Trademark Office
P.O. Box 1450
Alexandria, VA 22313-1450
www.uspto.gov

EGBERT LAW OFFICES
412 MAIN STREET, 7TH FLOOR
HOUSTON TX 77002

COPY MAILED

APR 14 2008

OFFICE OF PETITIONS

In re Application of :
Kuei-Chih Hsu :
Application No.: 29/250277 : ON PETITION
Filing or 371(c) Date: 11/08/2006 :
Attorney Docket Number: 1980-44 :

This is a decision on the Petition for Revival of an Application for Patent Abandoned Unintentionally Under 37 C.F.R. § 1.137(b), filed March 11, 2008.

This Petition is hereby **granted**.

The above-identified application became abandoned for failure to timely and properly reply to the Notice of Allowance and Issue Fee Due, and Notice of Allowability ("Notices"), mailed September 12, 2007. The Notices set a non-extendable three (3) month period for reply. No reply having been received, the application became abandoned on December 13, 2007. A Notice of Abandonment was mailed January 10, 2008.

The petition satisfies the requirements of 37 CFR 1.137(b) in that petitioner has supplied (1) the reply in the form of the issue fee and corrected drawings; (2) the petition fee, (3) a proper statement of unintentional delay, and (4) a terminal disclaimer and fee as required by 37 CFR 1.137(d). Accordingly, the failure to timely pay the issue fee as required by the Notice is accepted as being unintentionally delayed.

The terminal disclaimer is accepted and has been made of record. Any continuing application filed from this application must contain a copy of the terminal disclaimer. The copy of the terminal disclaimer must be filed with a cover letter requesting the terminal disclaimer be recorded on the continuing application. A copy of this decision should be attached to the cover letter.

This application is being referred to Publishing Division for processing into a patent.

Telephone inquiries concerning this decision should be directed to the undersigned at (571) 272-3232.

Derek L. Woods
Attorney
Office of Petitions

UNITED STATES PATENT AND TRADEMARK OFFICE

Commissioner for Patents
United States Patent and Trademark Office
P.O. Box 1450
Alexandria, VA 22313-1450
www.uspto.gov

OBLON SPIVAK MCCLELLAND
MAIER & NEUSTADT, P.C.
1940 DUKE STREET
ALEXANDRIA, VA 22314

COPY MAILED

JUL 2 4 2008

In re Application of :
Makoto Nijima :
Application No. 29/250,350 : ON PETITION
Filed: November 10, 2006 :
Attorney Docket No. 296398US8DES :

This is a decision on the petition, filed April 15, 2008 under 37 CFR 1.137(b) to revive the above-identified application.

The petition is **DISMISSED.**

Any request for reconsideration of this decision must be submitted within TWO (2) MONTHS from the mail date of this decision. Extensions of time under 37 CFR 1.136(a) are permitted. The reconsideration request should include a cover letter entitled "**Renewed Petition under 37 CFR 1.137(b)**." This is **not** final agency action within the meaning of 5 U.S.C. § 704.

The above-identified application became abandoned for failure to submit the Issue fee in a timely manner in reply to the Notice of Allowance mailed October 30, 2007, which set a statutory period for reply of three (3) months. Accordingly, the above-identified application became abandoned on January 31, 2008.

A grantable petition under 37 CFR 1.137(b) must be accompanied by: (1) the required reply, unless previously filed; (2) the petition fee as set forth in 37 CFR 1.17(m); (3) a statement that the entire delay in filing the required reply from the due date for the reply until the filing of a grantable petition pursuant to 37 CFR 1.137(b) was unintentional; and (4) any terminal disclaimer (and fee as set forth in 37 CFR 1.20(d)) required by 37 CFR 1.137(c). Where there is a question as to whether either the abandonment or the delay in filing a petition under 37 CFR 1.137 was unintentional, the Commissioner may require additional information. See MPEP 711.03(c)(III)(C) and (D). The instant petition lack(s) item(s) (4).

The petition does not satisfies the conditions for revival pursuant to the provisions of 37 CFR 1.137(b) in that (4) the terminal disclaimer was not received. Accordingly, this petition can not be revive until the terminal disclaimer is received.

Further correspondence with respect to this matter should be addressed as follows:

By mail: Mail Stop PETITION
Commissioner for Patents
Post Office Box 1450
Alexandria, VA 22313-1450

By hand: Customer Service Window
Randolph Building
401 Dulany Street
Alexandria, VA 22314

By facsimile: (571) 273-8300
ATTN: Office of Petitions

Telephone inquiries concerning this decision should be directed to the undersigned at (571) 272-3210.

Irvin Dingle
Petitions Examiner
Office of Petitions

UNITED STATES PATENT AND TRADEMARK OFFICE

Commissioner for Patents
United States Patent and Trademark Office
P. O. Box 1450
Alexandria, VA 22313-1450
www. uspto. gov

OBLON SPIVAK MCCLELLAND
MAIER & NEUSTADT, P.C.
1940 DUKE STREET
ALEXANDRIA, VA 22314

MAILED

APR 2 8 2009

OFFICE OF PETITIONS

In re Application of	:	
Makoto Niijima	:	
Application No. 29/250,350	:	ON PETITION
Filed: November 10, 2006	:	
Attorney Docket No. 296398US8DES	:	

This is a decision on the renewed petition filed September 22, 2008, which is being treated as a petition under 37 CFR 1.137(b), to revive the above-identified application.

The petition is **GRANTED.**

Telephone inquiries concerning this decision should be directed to Irvin Dingle at (571) 272-3210.

This matter is being referred to Technology Center AU 2911 for further processing.

Irvin Dingle
Petitions Examiner
Office of Petitions

UNITED STATES PATENT AND TRADEMARK OFFICE

Commissioner for Patents
United States Patent and Trademark Office
P.O. Box 1450
Alexandria, VA 22313-1450
www.uspto.gov

SANCHELIMA AND ASSOCIATES, P.A.
JESUS SANCHELIMA, ESQ.
235 S.W. LE JEUNE RD.
MIAMI FL 33134

COPY MAILED

AUG 05 2008

In re Application of	:	
Alfredo Sierra APARICI et al.	:	
Application No. 29/250,362	:	DECISION ON PETITION
Filed: November 10, 2006	:	
Attorney Docket No. 260452	:	

This is a decision on the petition under 37 CFR 1.137(b), filed June 12, 2008, to revive the above-identified design application.

The petition is **DISMISSED**.

Any request for reconsideration of this decision must be submitted within TWO (2) MONTHS from the mail date of this decision. Extensions of time under 37 CFR 1.136(a) are permitted. The reconsideration request should include a cover letter entitled "Renewed Petition under 37 CFR 1.137(b)." This is **not** a final agency action within the meaning of 5 U.S.C. § 704.

The application became abandoned for failure to timely pay the issue fee on or before November 14, 2007, as required by the Notice of Allowance and Fee(s) Due, mailed August 14, 2007, which set a statutory period for reply of three (3) months. Accordingly, the application became abandoned on November 15, 2007.

A grantable petition under 37 CFR 1.137(b) must be accompanied by: (1) the required reply, unless previously filed; (2) the petition fee as set forth in 37 CFR 1.17(m); (3) a statement that the entire delay in filing the required reply from the due date for the reply until the filing of a grantable petition pursuant to 37 CFR 1.137(b) was unintentional; and (4) any terminal disclaimer (and fee as set forth in 37 CFR 1.20(d)) required by 37 CFR 1.137(d). Where there is a question as to whether either the abandonment or the delay in filing a petition under 37 CFR 1.137 was unintentional, the Director may require additional information. See MPEP 711.03(c)(II)(C) and (D). The instant petition lacks item(s) (4) above.

Since the above-identified application is a utility or plant application filed before June 8, 1995, 37 CFR 1.137(d) requires a terminal disclaimer dedicating to the public a terminal part of the term of any patent granted on the application or any patent granted on any continuing application that contains a specific reference under 35 U.S.C. 120, 121, or 365(c) to the application. The period to be disclaimed will be a terminal part of the patent to be granted equivalent to the period of abandonment. The period of abandonment will be computed to be the number of months from the date of abandonment to the date of filing a grantable petition. A terminal disclaimer fee of $130 ($65 if small entity) is required. If the terminal disclaimer is signed by an assignee, the assignee must comply with the requirements of 37 CFR 3.73(b).

Further correspondence with respect to this matter should be addressed as follows:

By Mail: Mail Stop PETITION
Commissioner for Patents
P. O. Box 1450
Alexandria, VA 22313-1450

By hand: U.S. Patent and Trademark Office
Customer Service Window, Mail Stop Petitions
Randolph Building
401 Dulany Street
Alexandria, VA 22314

The centralized facsimile number is **(571) 273-8300.**

Telephone inquiries concerning this decision should be directed to Michelle R. Eason at (571) 272-4231.

Michelle R. Eason
Paralegal Specialist
Office of Petitions

UNITED STATES PATENT AND TRADEMARK OFFICE

Commissioner for Patents
United States Patent and Trademark Office
P.O. Box 1450
Alexandria, VA 22313-1450
www.uspto.gov

SANCHELIMA & ASSOCIATES, P.A.
JESUS SANCHELIMA, ESQ.
235 S.W. LE JEUNE ROAD
MIAMI FL 33134

RECEIVED
DEC 22 2008
OFFICE OF PETITIONS

In re Application of	:	
Alfredo Sierra APARICI	:	
Application No. 29/250,362	:	DECISION ON PETITION
Filed: November 10, 2006	:	
Attorney Docket No. **260452**	:	

This is a decision on the renewed petition under 37 CFR 1.137(b), filed August 25, 2008, to revive the above-identified design application.

The petition is **GRANTED**.

The application became abandoned for failure to timely pay the issue fee on or before November 14, 2007, as required by the Notice of Allowance and Fee(s) Due, mailed August 14, 2007, which set a statutory period for reply of three (3) months. Accordingly, the application became abandoned on November 15, 2007.

The petition satisfies the requirements of 37 CFR 1.137(b) in that petitioner has supplied (1) the reply in the form of the $410.00 issue fee, (2) the petition fee of $770.00, (3) a proper statement of unintentional delay, and (4) a terminal disclaimer and fee as required by 37 CFR 1.137(d). Accordingly, the failure to timely pay the issue fee as required by the Notice of Allowance is accepted as being unintentionally delayed.

The terminal disclaimer is accepted and has been made of record. Any continuing application filed from this application must contain a copy of the terminal disclaimer. The copy of the terminal disclaimer must be filed with a cover letter requesting the terminal disclaimer be recorded on the continuing application. A copy of this decision should be attached to the cover letter.

Telephone inquiries concerning this decision should be directed to the undersigned at (571) 272-4231.

This application is being referred to the Office of Data Management for further processing in accordance with this decision on petition.

Michelle R. Eason
Paralegal Specialist
Office of Petitions

UNITED STATES PATENT AND TRADEMARK OFFICE

Commissioner for Patents
United States Patent and Trademark Office
P.O. Box 1450
Alexandria, VA 22313-1450
www.uspto.gov

SANCHELIMA AND ASSOCIATES, P.A.
JESUS SANCHELIMA, ESQ.
235 S.W. LE JEUNE RD.
MIAMI FL 33134

COPY MAILED

OCT 0 1 2008

OFFICE OF PETITIONS

In re Application of	:	
Alfredo A. SIERRA et al.	:	
Application No. 29/250,365	:	DECISION ON PETITION
Filed: November 10, 2006	:	
Attorney Docket No. **260454**	:	

This is a decision on the petition under 37 CFR 1.137(b), filed June 12, 2008, to revive the above-identified application.

The petition is **DISMISSED**.

Any request for reconsideration of this decision must be submitted within TWO (2) MONTHS from the mail date of this decision. Extensions of time under 37 CFR 1.136(a) are permitted. The reconsideration request should include a cover letter entitled "Renewed Petition under 37 CFR 1.137(b)." This is **not** a final agency action within the meaning of 5 U.S.C. § 704.

The application became abandoned for failure to timely pay the issue fee on or before November 20, 2007, as required by the Notice of Allowance and Fee(s) Due, mailed August 20, 2007, which set a statutory period for reply of three (3) months. Accordingly, the application became abandoned on November 21, 2007. A Notice of Abandonment was mailed on December 14, 2007.

A grantable petition under 37 CFR 1.137(b) must be accompanied by: (1) the required reply, unless previously filed; (2) the petition fee as set forth in 37 CFR 1.17(m); (3) a statement that the entire delay in filing the required reply from the due date for the reply until the filing of a grantable petition pursuant to 37 CFR 1.137(b) was unintentional; and (4) any terminal disclaimer (and fee as set forth in 37 CFR 1.20(d)) required by 37 CFR 1.137(d). The present petition lacks items (4).

Since the above-identified application is a design application, 37 CFR 1.137(d) requires a terminal disclaimer dedicating to the public a terminal part of the term of any patent granted on

the application or any patent granted on any continuing application that contains a specific reference under 35 U.S.C. 120, 121, or 365(c) to the application. The period to be disclaimed will be a terminal part of the patent to be granted equivalent to the period of abandonment. The period of abandonment will be computed to be the number of months from the date of abandonment to the date of filing a grantable petition. A terminal disclaimer fee of $130 ($65 if small entity) is required. If the terminal disclaimer is signed by an assignee, the assignee must comply with the requirements of 37 CFR 3.73(b).

Further correspondence with respect to this matter should be addressed as follows:

By Mail: Mail Stop PETITION
Commissioner for Patents
P. O. Box 1450
Alexandria, VA 22313-1450

By hand: U. S. Patent and Trademark Office
Customer Service Window, Mail Stop Petitions
Randolph Building
401 Dulany Street
Alexandria, VA 22314

The centralized facsimile number is **(571) 273-8300.**

Telephone inquiries concerning this decision should be directed to Tredelle Jackson at (571) 272-2783.

Ramesh Krishnamurthy

Ramesh Krishnamurthy
Petitions Examiner
Office of Petitions

Encl: PTO/SB/63

PTO/SB/63 (09-08)
Approved for use through 10/31/2008. OMB 0651-0031
U.S. Patent and Trademark Office; U.S. DEPARTMENT OF COMMERCE
Under the Paperwork Reduction Act of 1995, no persons are required to a collection of information unless it displays a valid OMB control number.

TERMINAL DISCLAIMER TO ACCOMPANY PETITION	Docket Number (Optional)

In re Application of:

Name:

Application Number:

Filed:

For:

The owner*, _____ of _____ percent interest in the above-identified application hereby disclaims a terminal part of the term of any patent granted the above-identified application equivalent to: (1) if the above-identified application is a design application, the period of abandonment of the above-identified application, and (2) if the above-identified application is a utility or plant application, the lesser of: (a) the period of abandonment of the application; or (b) the period extending beyond twenty years from the date on which the above-identified application was filed in the United States or, if the application contains a specific reference to an earlier filed application(s) under 35 U.S.C. 120, 121, or 365(c), from the date on which the earliest such application was filed. This disclaimer also applies to any patent granted on a utility or plant application filed before June 8, 1995, or a design application, that contains a specific reference under 35 U.S.C. 120, 121, or 365(c) to the above-identified application. This disclaimer is binding upon the grantee, and its successors or assigns.

Check either box 1 or 2 below, if appropriate.

1. ☐ For submissions on behalf of an organization (e.g., corporation, partnership, university, government agency, etc.), the undersigned is empowered to act on behalf of the organization.

2. ☐ The undersigned is an attorney or agent of record. Registration Number_____.

_____	_____
Signature	Date
_____	_____
Typed or Printed Name	Telephone Number

☐ Terminal disclaimer fee under 37 CFR 1.20(d) included.

WARNING: Information on this form may become public. Credit card information should not be included on this form. Provide credit card information and authorization on PTO-2038.

* Statement under 37 CFR 3.73(b) is required if terminal disclaimer is signed by the assignee (owner). Form PTO/SB/96 may be used for making this certification. See MPEP § 324.

This collection of information is required by 37 CFR 1.137. The information is required to obtain or retain a benefit by the public which is to file (and by the USPTO to process) an application. Confidentiality is governed by 35 U.S.C. 122 and 37 CFR 1.11 and 1.14. This collection is estimated to take 12 minutes to complete, including gathering, preparing, and submitting the completed application form to the USPTO. Time will vary depending upon the individual case. Any comments on the amount of time you require to complete this form and/or suggestions for reducing this burden, should be sent to the Chief Information Officer, U.S. Patent and Trademark Office, U.S. Department of Commerce, P.O. Box 1450, Alexandria, VA 22313-1450. DO NOT SEND FEES OR COMPLETED FORMS TO THIS ADDRESS. **SEND TO: Commissioner for Patents, P.O. Box 1450, Alexandria, VA 22313-1450.**

If you need assistance in completing the form, call 1-800-PTO-9199 and select option 2.

Privacy Act Statement

The **Privacy Act of 1974 (P.L. 93-579)** requires that you be given certain information in connection with your submission of the attached form related to a patent application or patent. Accordingly, pursuant to the requirements of the Act, please be advised that: (1) the general authority for the collection of this information is 35 U.S.C. 2(b)(2); (2) furnishing of the information solicited is voluntary; and (3) the principal purpose for which the information is used by the U.S. Patent and Trademark Office is to process and/or examine your submission related to a patent application or patent. If you do not furnish the requested information, the U.S. Patent and Trademark Office may not be able to process and/or examine your submission, which may result in termination of proceedings or abandonment of the application or expiration of the patent.

The information provided by you in this form will be subject to the following routine uses:

1. The information on this form will be treated confidentially to the extent allowed under the Freedom of Information Act (5 U.S.C. 552) and the Privacy Act (5 U.S.C 552a). Records from this system of records may be disclosed to the Department of Justice to determine whether disclosure of these records is required by the Freedom of Information Act.
2. A record from this system of records may be disclosed, as a routine use, in the course of presenting evidence to a court, magistrate, or administrative tribunal, including disclosures to opposing counsel in the course of settlement negotiations.
3. A record in this system of records may be disclosed, as a routine use, to a Member of Congress submitting a request involving an individual, to whom the record pertains, when the individual has requested assistance from the Member with respect to the subject matter of the record.
4. A record in this system of records may be disclosed, as a routine use, to a contractor of the Agency having need for the information in order to perform a contract. Recipients of information shall be required to comply with the requirements of the Privacy Act of 1974, as amended, pursuant to 5 U.S.C. 552a(m).
5. A record related to an International Application filed under the Patent Cooperation Treaty in this system of records may be disclosed, as a routine use, to the International Bureau of the World Intellectual Property Organization, pursuant to the Patent Cooperation Treaty.
6. A record in this system of records may be disclosed, as a routine use, to another federal agency for purposes of National Security review (35 U.S.C. 181) and for review pursuant to the Atomic Energy Act (42 U.S.C. 218(c)).
7. A record from this system of records may be disclosed, as a routine use, to the Administrator, General Services, or his/her designee, during an inspection of records conducted by GSA as part of that agency's responsibility to recommend improvements in records management practices and programs, under authority of 44 U.S.C. 2904 and 2906. Such disclosure shall be made in accordance with the GSA regulations governing inspection of records for this purpose, and any other relevant (*i.e.*, GSA or Commerce) directive. Such disclosure shall not be used to make determinations about individuals.
8. A record from this system of records may be disclosed, as a routine use, to the public after either publication of the application pursuant to 35 U.S.C. 122(b) or issuance of a patent pursuant to 35 U.S.C. 151. Further, a record may be disclosed, subject to the limitations of 37 CFR 1.14, as a routine use, to the public if the record was filed in an application which became abandoned or in which the proceedings were terminated and which application is referenced by either a published application, an application open to public inspection or an issued patent.
9. A record from this system of records may be disclosed, as a routine use, to a Federal, State, or local law enforcement agency, if the USPTO becomes aware of a violation or potential violation of law or regulation.

Commissioner for Patents
United States Patent and Trademark Office
P.O. Box 1450
Alexandria, VA 22313-1450
www.uspto.gov

SANCHELIMA AND ASSOCIATES, P.A.
JESUS SANCHELIMA, ESQ.
235 S.W. LE JEUNE RD.
MIAMI FL 33134

COPY MAILED
DEC 22 2008

In re Application of	:	
Alfredo A. SIERRA et al.	:	
Application No. 29/250,365	:	DECISION ON PETITION
Filed: November 10, 2006	:	
Attorney Docket No. **260454**	:	

This is a decision on the renewed petition under 37 CFR 1.137(b), filed October 14, 2008, to revive the above-identified application.

The petition is **DISMISSED**.

Any request for reconsideration of this decision must be submitted within TWO (2) MONTHS from the mail date of this decision. Extensions of time under 37 CFR 1.136(a) are permitted. The reconsideration request should include a cover letter entitled "Renewed Petition under 37 CFR 1.137(b)." This is **not** a final agency action within the meaning of 5 U.S.C. § 704.

The application became abandoned for failure to timely pay the issue fee on or before November 20, 2007, as required by the Notice of Allowance and Fee(s) Due, mailed August 20, 2007, which set a statutory period for reply of three (3) months. Accordingly, the application became abandoned on November 21, 2007. A Notice of Abandonment was mailed on December 14, 2007.

A grantable petition under 37 CFR 1.137(b) must be accompanied by: (1) the required reply, unless previously filed; (2) the petition fee as set forth in 37 CFR 1.17(m); (3) a statement that the entire delay in filing the required reply from the due date for the reply until the filing of a grantable petition pursuant to 37 CFR 1.137(b) was unintentional; and (4) any terminal disclaimer (and fee as set forth in 37 CFR 1.20(d)) required by 37 CFR 1.137(d). The present petition lacks items (4).

The office was able to charge only $60 for the terminal disclaimer by Vicente Fores Ahuir. The balance of $10 is now due. Thus, the terminal disclaimer by Vicente Fores Ahuir was not

considered on its merits. The office was able to charge $70 for the terminal disclaimer by Alfredo Sierra Aparici.

Further correspondence with respect to this matter should be addressed as follows:

By Mail: Mail Stop PETITION
Commissioner for Patents
P. O. Box 1450
Alexandria, VA 22313-1450

By hand: U. S. Patent and Trademark Office
Customer Service Window, Mail Stop Petitions
Randolph Building
401 Dulany Street
Alexandria, VA 22314

The centralized facsimile number is **(571) 273-8300.**

Telephone inquiries concerning this decision should be directed to Tredelle Jackson at (571) 272-2783.

Ramesh Krishnamurthy

Ramesh Krishnamurthy
Petitions Examiner
Office of Petitions

RECEIVED
CENTRAL FAX CENTER
OCT 14 2008

PTO/SB/63 (08-08)
Approved for use through 07/31/2008. OMB 0651-0031
U.S. Patent and Trademark Office; U.S. DEPARTMENT OF COMMERCE

Under the Paperwork Reduction Act of 1995, no persons are required to a collection of information unless it displays a valid OMB control number.

TERMINAL DISCLAIMER TO ACCOMPANY PETITION	Docket Number (Optional) 260454

In re Application of:

Name: Alfredo Sierra Aparici and Vicente Fores Ahuir

Application Number: 29/250,365

Filed: 11/10/2008

For: HANDLE FOR SURGICAL INSTRUMENTS

The owner*, Alfredo Sierra Aparici of 50 percent interest in the above-identified application hereby disclaims a terminal part of the term of any patent granted the above-identified application equivalent to: (1) if the above-identified application is a design application, the period of abandonment of the above-identified application, and (2) if the above-identified application is a utility or plant application, the lesser of: (a) the period of abandonment of the application; or (b) the period extending beyond twenty years from the date on which the above-identified application was filed in the United States or, if the application contains a specific reference to an earlier filed application(s) under 35 U.S.C. 120, 121, or 365(c), from the date on which the earliest such application was filed. This disclaimer also applies to any patent granted on a utility or plant application filed before June 8, 1995, or a design application, that contains a specific reference under 35 U.S.C. 120, 121, or 365(c) to the above-identified application. This disclaimer is binding upon the grantee, and its successors or assigns.

Check either box 1 or 2 below, if appropriate.

1. ☐ For submissions on behalf of an organization (e.g., corporation, partnership, university, government agency, etc.), the undersigned is empowered to act on behalf of the organization.

2. ☑ The undersigned is an attorney or agent of record. Registration Number 28,755.

Signature	10/13/08 Date
Jesus Sanchelima, Esq. Typed or Printed Name	305-447-1617 Telephone Number

☑ Terminal disclaimer fee under 37 CFR 1.20(d) included.

WARNING: Information on this form may become public. Credit card information should not be included on this form. Provide credit card information and authorization on PTO-2038.

* Statement under 37 CFR 3.73(b) is required if terminal disclaimer is signed by the assignee (owner). Form PTO/SB/96 may be used for making this certification. See MPEP § 324.

This collection of information is required by 37 CFR 1.137. The information is required to obtain or retain a benefit by the public which is to file (and by the USPTO to process) an application. Confidentiality is governed by 35 U.S.C. 122 and 37 CFR 1.11 and 1.14. This collection is estimated to take 12 minutes to complete, including gathering, preparing, and submitting the completed application form to the USPTO. Time will vary depending upon the individual case. Any comments on the amount of time you require to complete this form and/or suggestions for reducing this burden, should be sent to the Chief Information Officer, U.S. Patent and Trademark Office, U.S. Department of Commerce, P.O. Box 1450, Alexandria, VA 22313-1450. DO NOT SEND FEES OR COMPLETED FORMS TO THIS ADDRESS. SEND TO: **Commissioner for Patents, P.O. Box 1450, Alexandria, VA 22313-1450.**

If you need assistance in completing the form, call 1-800-PTO-9199 and select option 2.

10/14/2008 VBUI11 00000047 29250365
01 FC:2814 70.00 OP

not Sure 50%

PTO/SB/63 (08-08)
Approved for use through 08/31/2008. OMB 0651-0031
U.S. Patent and Trademark Office; U.S. DEPARTMENT OF COMMERCE
Under the Paperwork Reduction Act of 1995, no persons are required to a collection of information unless it displays a valid OMB control number.

TERMINAL DISCLAIMER TO ACCOMPANY PETITION

Docket Number (Optional) 260454

In re Application of:

Name: Alfredo Sierra Aparici and Vicente Fores Ahuir

Application Number: 29/250,365

Filed: 11/10/2006

For: HANDLE FOR SURGICAL INSTRUMENTS

RECEIVED
CENTRAL FAX CENTER
OCT 14 2008

The owner*, Vicente Fores Ahuir of 50 percent interest in the above-identified application hereby disclaims a terminal part of the term of any patent granted the above-identified application equivalent to: (1) if the above-identified application is a design application, the period of abandonment of the above-identified application, and (2) if the above-identified application is a utility or plant application, the lesser of: (a) the period of abandonment of the application; or (b) the period extending beyond twenty years from the date on which the above-identified application was filed in the United States or, if the application contains a specific reference to an earlier filed application(s) under 35 U.S.C. 120, 121, or 365(c), from the date on which the earliest such application was filed. This disclaimer also applies to any patent granted on a utility or plant application filed before June 8, 1995, or a design application, that contains a specific reference under 35 U.S.C. 120, 121, or 365(c) to the above-identified application. This disclaimer is binding upon the grantee, and its successors or assigns.

Check either box 1 or 2 below, if appropriate.

1. ☐ For submissions on behalf of an organization (e.g., corporation, partnership, university, government agency, etc.), the undersigned is empowered to act on behalf of the organization.

2. ☑ The undersigned is an attorney or agent of record. Registration Number 28,755.

J Sanchelima — Signature

10/13/08 — Date

Jesus Sanchelima, Esq. — Typed or Printed Name

305-447-1617 — Telephone Number

☑ Terminal disclaimer fee under 37 CFR 1.20(d) included.

WARNING: Information on this form may become public. Credit card information should not be included on this form. Provide credit card information and authorization on PTO-2038.

* Statement under 37 CFR 3.73(b) is required if terminal disclaimer is signed by the assignee (owner). Form PTO/SB/96 may be used for making this certification. See MPEP § 324.

This collection of information is required by 37 CFR 1.137. The information is required to obtain or retain a benefit by the public which is to file (and by the USPTO to process) an application. Confidentiality is governed by 35 U.S.C. 122 and 37 CFR 1.11 and 1.14. This collection is estimated to take 12 minutes to complete, including gathering, preparing, and submitting the completed application form to the USPTO. Time will vary depending upon the individual case. Any comments on the amount of time you require to complete this form and/or suggestions for reducing this burden, should be sent to the Chief Information Officer, U.S. Patent and Trademark Office, U.S. Department of Commerce, P.O. Box 1450, Alexandria, VA 22313-1450. DO NOT SEND FEES OR COMPLETED FORMS TO THIS ADDRESS. SEND TO: **Commissioner for Patents, P.O. Box 1450, Alexandria, VA 22313-1450.**

If you need assistance in completing the form, call 1-800-PTO-9199 and select option 2.

10/14/2008 VBUI11 00000047 29250365
02 FC:1999 60.00 OP

RAM Fee History Query

Revenue Accounting and Management

Name/Number: 29250365 Total Records Found: 7

Start Date: Any Date End Date: Any Date

Accounting Date	Sequence Num.	Fee Type	Fee Code	Fee Amount	Mailroom Date	Payment Method
10/14/2008	00000070	1	2814	$70.00	10/14/2008	CC
10/14/2008	00000071	1	1999	$60.00	10/14/2008	CC
06/12/2008	00000134	1	2453	$770.00	06/12/2008	CC
06/12/2008	00000135	1	2502	$410.00	06/12/2008	CC
11/13/2006	00004531	4	2012	$100.00	11/10/2006	CC
11/13/2006	00004532	4	2112	$50.00	11/10/2006	CC
11/13/2006	00004533	4	2312	$65.00	11/10/2006	CC

Document Code: IMIS

Notice of Fee Due

Date: 10/14/08

Application Number: 29/250365

A fee is due for the attached document for the reason indicated below. Please check the application for the appropriate authorization to charge a deposit account. If an authorization is present, please charge the appropriate fee*. If an authorization is not present, notify the application of the fee deficiency.

***If the fee due is for any of the filing fees, check for authorization to charge the surcharge. If authorization is present, charge the surcharge for late payment of the filing fees as well.**

- ☐ Insufficient payment by check or money order.
- ☐ Insufficient funds in deposit account _____ at _____:_____ (time).
- ☑ Insufficient payment by credit card.
- ☐ Declined credit card.
- ☐ No authorization to charge a deposit account.

Fee code(s) to be applied:	2814	$ 70
Amount in holding fee code:	1506	
	1622/2622	
	1999	$ 60
Total remaining due from applicant:		$ 10

RAM Operator VB

Rev. 12/27/07

RAM Fee History Query

Revenue Accounting and Management

Name/Number: 29250365 Total Records Found: 7

Start Date: Any Date End Date: Any Date

Accounting Date	Sequence Num.	Fee Type	Fee Code	Fee Amount	Mailroom Date	Payment Method
10/14/2008	00000070	1	2814	$70.00	10/14/2008	CC
10/14/2008	00000071	1	1999	$60.00	10/14/2008	CC
06/12/2008	00000134	1	2453	$770.00	06/12/2008	CC
06/12/2008	00000135	1	2502	$410.00	06/12/2008	CC
11/13/2006	00004531	4	2012	$100.00	11/10/2006	CC
11/13/2006	00004532	4	2112	$50.00	11/10/2006	CC
11/13/2006	00004533	4	2312	$65.00	11/10/2006	CC

UNITED STATES PATENT AND TRADEMARK OFFICE

Commissioner for Patents
United States Patent and Trademark Office
P.O. Box 1450
Alexandria, VA 22313-1450
www.uspto.gov

SANCHELIMA & ASSOCIATES, P.A.
JESUS SANCHELIMA, ESQ.
235 S.W. LE JEUNE ROAD
MIAMI FL 33134

MAILED

MAR 16 2009

OFFICE OF PETITIONS

In re Application of	:	
Alfredo S. APARCI et al.	:	
Application No. 29/250,365	:	DECISION ON PETITION
Filed: November 10, 2006	:	
Attorney Docket No. **260454**	:	

This is a decision on the renewed petition under 37 CFR 1.137(b), filed January 12, 2009, to revive the above-identified design application.

The petition is **GRANTED**.

The application became abandoned for failure to timely pay the issue fee and submit corrected drawings on or before November 20, 2007, as required by the Notice of Allowance and Fee(s) Due, mailed August 20, 2007, which set a statutory period for reply of three (3) months. Accordingly, the application became abandoned on November 21, 2007. A Notice of Abandonment was mailed on December 14, 2007.

The petition satisfies the requirements of 37 CFR 1.137(b) in that petitioner has supplied (1) the reply in the form of the $410 issue fee and the corrected drawings, (2) the petition fee of $770, (3) a proper statement of unintentional delay, and (4) a terminal disclaimer and fee as required by 37 CFR 1.137(d). Accordingly, the failure to timely pay the issue fee and submit corrected drawings as required by the Notice of Allowance and Fee(s) is accepted as being unintentionally delayed.

The terminal disclaimers are accepted and have been made of record. Any continuing application filed from this application must contain a copy of the terminal disclaimer. The copy of the terminal disclaimer must be filed with a cover letter requesting the terminal disclaimer be recorded on the continuing application. A copy of this decision should be attached to the cover letter.

Telephone inquiries concerning this decision should be directed to Tredelle Jackson at (571)272-2783.

This application is being referred to the Office of Data Management for further processing in accordance with this decision on petition.

Ramesh Krishnamurthy
Petitions Examiner
Office of Petitions

UNITED STATES PATENT AND TRADEMARK OFFICE

Commissioner for Patents
United States Patent and Trademark Office
P.O. Box 1450
Alexandria, VA 22313-1450
www.uspto.gov

FISH & RICHARDSON PC
P.O. BOX 1022
MINNEAPOLIS, MN 55440-1022

COPY MAILED

NOV 28 2007

OFFICE OF PETITIONS

In re Application of	:	
Kang et al.	:	
Application No.: 29/250397	:	DECISION ON
Filing or 371(c) Date: 11/13/2006	:	PETITION
Attorney Docket Number: 19108-011001	:	

This is a decision in response to the "Petition Under 37 CFR 1.181(A) to Withdraw Holding of Abandonment Based on Non-Receipt of Office Action," filed October 2, 2007.

This Petition is hereby **granted**.

The above-identified application became abandoned for failure to timely and properly reply to the Notice to File Missing parts of Nonprovisional Application ("Notice"), mailed December 14, 2006. The Notice set a two (2) month period for reply. No response having been received, the application became abandoned on February 15, 2007. A Notice of Abandonment was mailed August 16, 2007.

With the instant petition, Applicant has demonstrated non-receipt of the Notice by a preponderance of the evidence.

In view of the foregoing, the holding of abandonment is hereby withdrawn.

No petition fee has been charged and none is due.

The application will be referred to the Office of Patent Application Processing for re-mailing of the Notice, and for re-mailing of the Filing Receipt.

Telephone inquiries concerning this matter should be directed to the undersigned at (571) 272-3232.

Derek L. Woods
Attorney
Office of Petitions

UNITED STATES PATENT AND TRADEMARK OFFICE

Commissioner for Patents
United States Patent and Trademark Office
P.O. Box 1450
Alexandria, VA 22313-1450
www.uspto.gov

TERUMO CARDIOVASCULAR SYSTEMS CORPORATION
ATTN: GAEL DIANE TISACK
6200 JACKSON ROAD
ANN ARBOR MI 48103

COPY MAILED

JUN 2 0 2008

OFFICE OF PETITIONS

In re Application of :
Thomas G. Hacker et al. :
Application No. 29/250,400 :
Filed: November 13, 2006 :
Attorney Docket No: **19498-003001** :

ON PETITION

This is a decision on the petition filed May 29, 2008 under 37 CFR 1.137(b),[1] to revive the above-identified application.

The petition under 37 CFR 1.137 (b) is **DISMISSED**.

Any further petition to revive the above-identified application must be submitted within TWO (2) MONTHS from the mail date of this decision. Extensions of time under 37 CFR 1.136(b) are permitted. The reconsideration request should include a cover letter entitled "Petition under 37 CFR 1.137." This is **not** final agency action within the meaning of 5 U.S.C. § 704.

This application became abandoned April 25, 2008 for failure to file corrected drawings in response to the Notice of Allowability mailed on January 24, 2008. Accordingly, the Notice of Abandonment was mailed on May 19, 2008.

While the issue fee was previously submitted and while the corrected drawings have

---

[1]Effective December 1, 1997, the provisions of 37 CFR 1.137(b) now provide that where the delay in reply was unintentional, a petition may be filed to revive an abandoned application or a lapsed patent pursuant to 37 CFR 1.137(b). A grantable petition filed under the provisions of 37 CFR 1.137(b) must be accompanied by:

(1) the required reply, unless previously filed. In a nonprovisional application abandoned for failure to prosecute, the required reply may be met by the filing of a continuing application. In a nonprovisional application filed on or after June 8, 1995, and abandoned for failure to prosecute, the required reply may also be met by the filing of a request for continued examination in compliance with § 1.114. In an application or patent, abandoned or lapsed for failure to pay the issue fee or any portion thereof, the required reply must be the payment of the issue fee or any outstanding balance thereof.

(2) the petition fee as set forth in 37 CFR 1.17(m);

(3) a statement that the entire delay in filing the required reply from the due date for the reply until the filing of a grantable petition pursuant to 37 CFR 1.137(b) was unintentional. The Commissioner may required additional information where there is a question whether the delay was unintentional; and

(4) any terminal disclaimer (and fee as set forth in 37 CFR 1.20(d)) required pursuant to 37 CFR 1.137(c)).

been submitted with the instant petition, the petition does not satisfy requirement (4) of the regulation.

Petitioner must submit a Terminal Disclaimer with any renewed petition since this is a design application. **Petitioner should note that submission of any renewed petition without the required reply will be construed as intentional delay**.

Additionally, there is no indication that petitioner herein was ever empowered to prosecute the instant application. If petitioner desires to receive future correspondence regarding this application, the appropriate power of attorney and address change documentation must be submitted. A courtesy copy of this decision will be mailed to petitioner. However, all future correspondence will be directed to the address of record until such time as appropriate instructions are received to the contrary.

Further correspondence with respect to this matter should be addressed as follows:

By mail: Mail Stop Petitions
Commissioner for Patents
P.O. Box 1450
Alexandria VA 22313-1450

By FAX: (571) 273-8300
ATTN: Office of Petitions

Telephone inquiries concerning this matter may be directed to the undersigned Petitions Attorney at (571) 272-3212.

Patricia Faison-Ball

Patricia Faison-Ball
Senior Petitions Attorney
Office of Petitions

UNITED STATES PATENT AND TRADEMARK OFFICE

Commissioner for Patents
United States Patent and Trademark Office
P.O. Box 1450
Alexandria, VA 22313-1450
www.uspto.gov

FISH & RICHARDSON P.C.
PO BOX 1022
MINNEAPOLIS MN 55440-1022

COPY MAILED

AUG 15 2008

OFFICE OF PETITIONS

In re Application of
Thomas G. Hacker et al.
Application No. 29/250,400
Filed: November 13, 2006
Attorney Docket No: **19498-003001**

ON PETITION

This is a decision on the renewed petition filed July 11, 2008 under 37 CFR 1.137(b),[1] to revive the above-identified application.

The petition under 37 CFR 1.137 (b) is **GRANTED**.

Although the issue fee had been timely paid, this application became abandoned April 25, 2008 for failure to file corrected drawings in response to the Notice of Allowability mailed on January 24, 2008. Accordingly, the Notice of Abandonment was mailed on May 19, 2008. A petition to revive filed May 29, 2008 was dismissed in a decision mailed June 20, 2008 because the petition was not accompanied by a terminal disclaimer.

All other requirements of 37 CFR 1.137(b), including the filing of a terminal disclaimer, and fee, having now been met, this matter is being referred to the Publishing Division.

Telephone inquiries concerning this matter may be directed to the undersigned Petitions Attorney at (571) 272-3212.

Patricia Faison-Ball
Senior Petitions Attorney
Office of Petitions

---

[1] Effective December 1, 1997, the provisions of 37 CFR 1.137(b) now provide that where the delay in reply was unintentional, a petition may be filed to revive an abandoned application or a lapsed patent pursuant to 37 CFR 1.137(b). A grantable petition filed under the provisions of 37 CFR 1.137(b) must be accompanied by:

(1) the required reply, unless previously filed. In a nonprovisional application abandoned for failure to prosecute, the required reply may be met by the filing of a continuing application. In a nonprovisional application filed on or after June 8, 1995, and abandoned for failure to prosecute, the required reply may also be met by the filing of a request for continued examination in compliance with § 1.114. In an application or patent, abandoned or lapsed for failure to pay the issue fee or any portion thereof, the required reply must be the payment of the issue fee or any outstanding balance thereof.

(2) the petition fee as set forth in 37 CFR 1.17(m);

(3) a statement that the entire delay in filing the required reply from the due date for the reply until the filing of a grantable petition pursuant to 37 CFR 1.137(b) was unintentional. The Commissioner may required additional information where there is a question whether the delay was unintentional; and

(4) any terminal disclaimer (and fee as set forth in 37 CFR 1.20(d)) required pursuant to 37 CFR 1.137(c)).

UNITED STATES PATENT AND TRADEMARK OFFICE

Commissioner for Patents
United States Patent and Trademark Office
P.O. Box 1450
Alexandria, VA 22313-1450
www.uspto.gov

Date: 07/24/08

Patent No. : D570685 S
Ser. No. : 29/250,408
Inventor(s) : KOENNECKE, WESTON S.
Issued : 06/10/08
Title : **DISPOSABLE CUP LID**
Docket No. : **0110047-057**

Re: Request for Certificate of Correction

Consideration has been given your request for the issuance of a certificate of correction for the above-identified patent under the provisions of Rule(s) 1.322 and/or 1.323.

Assignees' names and addresses (assignment data) printed in a patent, are based *solely* on information supplied in the appropriate space for identifying the assignment data, i.e., item 3 of the Issue Fee Transmittal Form PTOL-85B. Granting of a request under 37 CFR 3.81(b) is required to correct applicant's error providing ***incorrect or erroneous*** assignment data, *before* issuance of a Certificate of Correction, under 37 CFR 1.323 *(see Manual of Patent Examining Procedures (M.P.E.P) Chp.1400, sect. 1481).* This procedure is required *at any time after the issue fee is paid*, including after issuance of the patent.

In view of the foregoing, your request, in this mater, is hereby denied.

A request to correct the Assignee under 37 CFR 3.81(b) should include:

A. **the processing fee set forth in 37 CFR 1.117(h) (currently $130);**
B. a statement that the failure to include the correct assignee name on the PTOL-85B was inadvertent; and
C. a copy of the Notice of Recordation of Assignment Document, reflecting the reel and frame number where the assignment(s) is recorded and/or reflecting proof of *the date* the assignment was submitted for recordation.

In the Request, Applicant(s) may request that the file be forwarded to Certificates of Correction Branch, for issuance of a Certificate of Correction, if the Request is granted.

Any request under 37 CFR 3.81(b) should be directed to the following address or facsimile number:

By mail: Mail Stop PETITIONS
Commissioner for Patents
Post Office Box 1450
Alexandria, VA 22313-1450

By hand: Customer Service Window
Mail Stop Petitions
Randolph Building
401 Dulany Street
Alexandria, VA 22314

By fax: (571) 273-0025
ATTN: Office of Petitions

If a fee (currently $100) was previously submitted for consideration of a Request for Certificate of Correction, under CFR 1.323, to correct assignment data, no additional fee is required.

Lamonte M. Newsome

Lamonte M. Newsome
For Mary Diggs, Supervisor
Decisions & Certificates
Of Correction Branch
(703) 305-8309 or (703) 308-9390 #112

BELL, BOYD & LLOYD, LLP
P.O. Box 1135
CHICAGO IL 60690

LMN

UNITED STATES PATENT AND TRADEMARK OFFICE

Commissioner for Patents
United States Patent and Trademark Office
P.O. Box 1450
Alexandria, VA 22313-1450
www.uspto.gov

K&L GATES LLP
PO BOX 1135
CHICAGO IL 60690

MAILED

MAR 16 2009

OFFICE OF PETITIONS

In re Patent No. D570,685	:	
Issue Date: June 10, 2008	:	
Application No. 29/250,408	:	DECISION ON PETITION
Filed: November 13, 2006	:	
Attorney Docket No. 0110047-057	:	

This is a decision on the "REQUEST TO CORRECT ASSIGNEE PURSUANT TO 37 CFR 3.81(b) AND REQUEST FOR CERTIFICATE OF CORRECTION PURSUANT TO 37 CFR 1.323", filed February 12, 2009.

The petition is **GRANTED**.

An application may issue in the name of an assignee rather than the applicant if requested prior to issuance of a patent.[1] However, in the event the request is not made prior to issuance, a Certificate of Correction under 37 CFR 1.323 may be requested. A request for a Certificate of Correction under 37 CFR 1.323 to correct the assignee's name will not be granted unless a petition under 37 CFR 3.81(b) is granted. Such request under 37 CFR 3.81(b) should include:

(A) the processing fee required by 37 CFR 1.17(i);

(B) a request for issuance of the application in the name of the assignee, or a request that a patent be corrected to state the name of the assignee;

(C) a statement that the assignment was submitted for recordation as set forth in 37 CFR 3.11 before issuance of the patent; and

[1] See 37 CFR 3.81.

(D) a request for a certificate of correction under 37 CFR 1.323 accompanied by the fee set forth in 37 CFR 1.20(a).[2]

The file is being forwarded to the Certificate of Corrections Branch for issuance of the requested Certificate of Correction.

Telephone inquiries related to this decision should be directed to the undersigned at (571)272-3207.

Cliff Congo
Petitions Attorney
Office of Petitions

[2] MPEP 307.

UNITED STATES PATENT AND TRADEMARK OFFICE

Commissioner for Patents
United States Patent and Trademark Office
P.O. Box 1450
Alexandria, VA 22313-1450
www.uspto.gov

WOOD, HERRON & EVANS, LLP
2700 CAREW TOWER
441 VINE STREET
CINCINNATI OH 45202

COPY MAILED

AUG 05 2008

OFFICE OF PETITIONS

In re Application of	:	
Tomatsu et al.	:	
Application No. 29/250418	:	DECISION
Filing or 371(c) Date: 11/14/2006	:	ON PETITION
Patent No.: 7061766	:	
Issue Date: 08/21/2007	:	
Attorney Docket Number: SHG-059D2	:	

This is a decision on the "Request to Correct Assignee Under 37 CFR 3.81(b)," filed March 17, 2007, to correct the name of the assignee on the front page of the above-identified patent by way of a Certificate of Correction.

The Petition is **granted**.

The petition was accompanied by a certificate of correction as required by 3.81(b), and the fee submitted with the present petition. Further, Office assignment records reflect that Senko Medical Instrument Mfg. Co., Ltd., and Fortune Ten Ltd., are the assignees of record. As the request complies with the provisions of 37 CFR 3.81(b), it would be appropriate for a certificate of correction to be processed.

Telephone inquiries concerning this matter should be directed to the undersigned at (571) 272-3232. Any questions concerning the issuance of the Certificate of Correction should be directed to the Certificate of Correction Branch at (571) 272-4200.

This matter is being referred to the Certificates of Correction Branch for processing of a certificate of correction after issuance of this application into a patent.

The Certificate of Correction fee has been charged to Petitioner's deposit account.

/Derek L. Woods/
Derek L. Woods
Attorney
Office of Petitions

UNITED STATES PATENT AND TRADEMARK OFFICE

Commissioner for Patents
United States Patent and Trademark Office
P.O. Box 1450
Alexandria, VA 22313-1450
www.uspto.gov

8/27/09

Patent No. :D549331
Ser. No. :29/250418
Inventor(s) :Tomatsu et al.
Issued : 8/21/07
Title : PATELLA TRAP RETRACTOR FOR KNEE ARTHOPLASTY
Docket No. :

Re: Request for Certificate of Correction

Consideration has been given your request for the issuance of a certificate of correction for the above-identified patent under the provisions of Rule(s) 1.322 and/or 1.323.

Assignees' names and addresses (assignment data) printed in a patent, are based *solely* on information supplied in the appropriate space for identifying the assignment data, i.e., item 3 of the Issue Fee Transmittal Form PTOL-85B. Granting of a request under 37 CFR 3.81(b) is required to correct applicant's error providing ***incorrect or erroneous*** assignment data, *before* issuance of a Certificate of Correction, under 37 CFR 1.323 *(see Manual of Patent Examining Procedures (M.P.E.P) Chp.1400, sect. 1481).* This procedure is required *at any time after the issue fee is paid*, including after issuance of the patent.

In view of the foregoing, your request, in this mater, is hereby denied.

A request to correct the Assignee under 37 CFR 3.81(b) should include:

A. **the processing fee set forth in 37 CFR 1.117(h) (currently $130);**
B. a statement that the failure to include the correct assignee name on the PTOL-85B was inadvertent; and
C. a copy of the Notice of Recordation of Assignment Document, reflecting the reel and frame number where the assignment(s) is recorded and/or reflecting proof of *the date* the assignment was submitted for recordation.

In the Request, Applicant(s) may request that the file be forwarded to Certificates of Correction Branch, for issuance of a Certificate of Correction, if the Request is granted.

Any request under 37 CFR 3.81(b) should be directed to the following address or facsimile number:

By mail: Mail Stop PETITIONS
Commissioner for Patents
Post Office Box 1450
Alexandria, VA 22313-1450

By hand: Customer Service Window
Mail Stop Petitions
Randolph Building
40l Dulany Street
Alexandria, VA 22314

By fax: (703) 872-9306
ATTN: Office of Petitions

If a fee (currently $100) was previously submitted for consideration of a Request for Certificate of Correction, under CFR 1.323, to correct assignment data, , no additional fee is required.

A certificate of correction will be issued to correct the remaining errors noted in your request.

Henry Randall
Decisions & Certificates
of Correction Branch
(703) 756-1571

WOOD HERRON & EVANS L.L.P.
441 VINE STREET
2700CAREW TOWER
CINCINNIATI, OH 45202

HR

UNITED STATES PATENT AND TRADEMARK OFFICE

Commissioner for Patents
United States Patent and Trademark Office
P.O. Box 1450
Alexandria, VA 22313-1450
www.uspto.gov

COPY MAILED

JUL 2 0 2007

OFFICE OF PETITIONS

THE BLACK & DECKER CORPORATION
701 EAST JOPPA ROAD, TW199
TOWSON, MD 21286

In re Application of
Leasure, Etter, Welsh, and Vos
Application No. 29/250,467
Filed: November 16, 2006
Attorney Docket No. D-US-JK-10587A
For: AIR COMPRESSOR

: DECISION GRANTING STATUS
: UNDER 37 CFR 1.47(a)

This is in response to the petition under 37 CFR 1.47(a), filed June 15, 2007.

The petition is **GRANTED**.

The above-identified application and papers have been reviewed and found in compliance with 37 CFR 1.47(a). This application is hereby accorded Rule 1.47(a) status.

The above-cited application was filed on November 16, 2006, without a properly executed declaration. A Notice to File Missing Parts of Nonprovisional Application was mailed on December 15, 2006, allowing a shortened period for reply of two months from its mailing date. Extensions of the time set for reply were available pursuant to 37 CFR 1.136(a). The notice required a proper oath or declaration to be filed and payment of a surcharge. The instant petition was filed on June 15, 2007, with a request for extension of time within the fourth month.

Petitioner has shown that inventor Etter has constructively refused join the prosecution of the application. The above-identified application and papers have been reviewed and found in compliance with 37 CFR 1.47(a). This application is hereby accorded Rule 1.47(a) status.

As provided in Rule 1.47(c), this Office will forward notice of this application's filing to the non-signing inventor at the address given in the petition. Notice of the filing of this application will also be published in the Official Gazette.

The petition fee is $200.00 and will be charged to deposit account 02-2548. The amount of $1590.00 for the request for an extension of time within the fourth month is noted as having been charged twice. The amount of $1590.00 will be refunded to deposit account 02-2548, in due course.

This application will be forwarded to the Office of Initial Patent Examination for further processing.

Telephone inquiries concerning this decision should be directed to the undersigned at (571) 272-3222.

Kenya A. McLaughlin
Petitions Attorney
Office of Petitions

UNITED STATES PATENT AND TRADEMARK OFFICE

Commissioner for Patents
United States Patent and Trademark Office
P.O. Box 1450
Alexandria, VA 22313-1450
www.uspto.gov

COPY MAILED

JUL 2 0 2007

OFFICE OF PETITIONS

Mark A. Etter
16904 E. 29th Street South
Independence, MO 64055

In re Application of :
Leasure, Etter, Welsh, and Vos :
Application No. 29/250,467 : LETTER
Filed: November 16, 2006 :
Attorney Docket No. D-US-JK-10587A :
For: AIR COMPRESSOR

Dear Inventor Etter:

You are named as a joint inventor in the above-identified United States patent application filed under the provisions of 35 U.S.C. 116 (United States Code) and 37 CFR 1.47(a), Rules of Practice in Patent Cases. Should a patent be granted on the application you will be designated therein as a joint inventor.

As a joint inventor, you are entitled to inspect any paper in the file wrapper of the application, order copies of all or any part thereof (at a prepaid cost per 37 CFR 1.19) or make your position of record in the application. Alternatively, you may arrange to do any of the preceding through a registered patent attorney or agent presenting written authorization from you. If you care to join the application, counsel of record (see below) would presumably assist you. Joining in the application would entail the filing of an appropriate oath or declaration by you pursuant to 37 CFR 1.63.

Telephone inquiries regarding this communication should be directed to Petitions Attorney Kenya A. McLaughlin at (571) 272-3222. Requests for information regarding your application should be directed to the File Information Unit at (703) 308-2733. Information regarding how to pay for and order a copy of the application, or a specific paper in the application, should be directed to Certification Division at (703) 308-9726 or 1-800-972-6382 (outside the Washington D.C. area).

Kenya A. McLaughlin
Petitions Attorney
Office of Petitions

THE BLACK & DECKER CORPORATION
701 EAST JOPPA ROAD, TW199
TOWSON, MD 21286

UNITED STATES PATENT AND TRADEMARK OFFICE

Commissioner for Patents
United States Patent and Trademark Office
P.O. Box 1450
Alexandria, VA 22313-1450
www.uspto.gov

MOTOROLA INC
600 NORTH US HIGHWAY 45
W4 - 39Q
LIBERTYVILLE IL 60048-5343

COPY MAILED

JUL 21 2008

In re Application of

Chao (Adam) Huang :

Application No. 29/250,469

: DECISION ON PETITION

Filed: November 16, 2006

:

Attorney Docket No. CS31697RS

This is a decision on the petition under 37 CFR 1.137(b), filed, June 17, 2008, to revive the above-identified application.

The petition is **GRANTED**.

The above-cited application became abandoned for failure to reply in a timely manner to the non-final Office action mailed August 8, 2007, which set a shortened statutory period for reply of three (3) months from its mailing date. No extension of time pursuant to 37 CFR 1.136(a) was obtained within the allowable period. Accordingly, the application became abandoned on November 9, 2007. A Notice of Abandonment was mailed March 19, 2008.

The terminal disclaimer filed June 17, 2008, is noted.

The amendment filed June 17, 2008, is also noted.

The application is being forwarded to Technology Center 2900, GAU 2912 for further processing.

Telephone inquiries concerning this decision should be directed to the undersigned at (571) 272-3222.

Kenya A. McLaughlin

Kenya A. McLaughlin
Petitions Attorney
Office of Petitions

PTO/SB/27 (09-04)
Approved for use through 07/31/2006. OMB 0651-0031
U.S. Patent and Trademark Office; U.S. DEPARTMENT OF COMMERCE
Under the Paperwork Reduction Act of 1995, no persons are required to respond to a collection of information unless it displays a valid OMB control number.

REQUEST FOR EXPEDITED EXAMINATION OF A DESIGN APPLICATION (37 CFR 1.155)

Application Number	TBD 29/250 479
Filing Date	11/16/2006
First Named Inventor	Jenny T. Lam
Title	Background Image for a Portion of a Display Screen
Atty Docket Number	013797.02620

ADDRESS TO:
MAIL STOP EXPEDITED DESIGN
COMMISSIONER FOR PATENTS
P.O. Box 1450
Alexandria, VA 22313-1450

This is a request for expedited examination of a design application under 37 CFR 1.155.

NOTE: If the Request made by this form accompanies original application papers, include form PTO/SB/18 "Design Patent Application Transmittal" or its equivalent.

A preexamination search was conducted. The field of search was:

Class D14 (subclasses 374, 485, 486, 487, 488, 489, 490, 491, 492, 493, 494, 495); Class D18 (subclasses 24, 25, 26, 27, 28, 29, 30, 31, 32, 33); Class D19 (subclasses 6, 7); Class D20 (subclasses 11, 18); Class D21subclasses (324, 325, 326, 327, 328, 329, 330, 331, 332, 333); Class 345 (subclasses 683, 902); and Class 715 (subclasses 764, 771, 773, 775, 776, 835, 836, 837, 838, 839, 846, 976)

Related applications: Attorney Docket No. 013797.02621 filed 11-16-2006

If not previously filed for the above-identified application, the following items required by 37 CFR 1.155 are enclosed:
Formal drawings (see 37 CFR 1.84).
The fee set forth in 37 CFR 1.17(k).
An information disclosure statement in compliance with 37 CFR 1.98.

11-27-06
Approved
Jacqueline M. Stone
Jacqueline M. Stone, Director
Technology Center 1700

/Robert S. Katz/ — Signature

November 16, 2006 — Date

Robert S. Katz — Typed or printed name

36,402 — Registration Number, if applicable

(202) 824-3000 — Telephone Number

WARNING: Information on this form may become public. Credit card information should not be included on this form. Provide credit card information and authorization on PTO-2038.

PTO/SB/27 (09-04)
Approved for use through 07/31/2006. OMB 0651-0031
U.S. Patent and Trademark Office; U.S. DEPARTMENT OF COMMERCE
Under the Paperwork Reduction Act of 1995, no persons are required to respond to a collection of information unless it displays a valid OMB control number.

REQUEST FOR EXPEDITED EXAMINATION OF A DESIGN APPLICATION (37 CFR 1.155)

Application Number	TBD 29/250 482
Filing Date	11/16/2006
First Named Inventor	Jenny T. Lam
Title	Background Image for a Portion of a Display Screen
Atty Docket Number	013797.02621

ADDRESS TO:
MAIL STOP EXPEDITED DESIGN
COMMISSIONER FOR PATENTS
P.O. Box 1450
Alexandria, VA 22313-1450

This is a request for expedited examination of a design application under 37 CFR 1.155.

NOTE: If the Request made by this form accompanies original application papers, include form PTO/SB/18 "Design Patent Application Transmittal" or its equivalent.

A preexamination search was conducted. The field of search was:

Class D14 (subclasses 374, 485, 486, 487, 488, 489, 490, 491, 492, 493, 494, 495); Class D18 (subclasses 24, 25, 26, 27, 28, 29, 30, 31, 32, 33); Class D19 (subclasses 6, 7); Class D20 (subclasses 11, 18); Class D21subclasses (324, 325, 326, 327, 328, 329, 330, 331, 332, 333); Class 345 (subclasses 683, 902); and Class 715 (subclasses 764, 771, 773, 775, 776, 835, 836, 837, 838, 839, 846, 976)

Related applications: Attorney Docket No. 013797.02620 filed 11-16-2006

If not previously filed for the above-identified application, the following items required by 37 CFR 1.155 are enclosed:
- Formal drawings (see 37 CFR 1.84).
- The fee set forth in 37 CFR 1.17(k).
- An information disclosure statement in compliance with 37 CFR 1.98.

11-27-06
Approved
Jacqueline M. Stone
Jacqueline M. Stone, Director
Technology Center 1700

/Robert S. Katz/ — Signature

November 16, 2006 — Date

Robert S. Katz — Typed or printed name

36,402 — Registration Number, if applicable

(202) 824-3000 — Telephone Number

WARNING: Information on this form may become public. Credit card information should not be included on this form. Provide credit card information and authorization on PTO-2038.

PTO/SB/27 (09-04)
Approved for use through 07/31/2006. OMB 0651-0031
U.S. Patent and Trademark Office; U.S. DEPARTMENT OF COMMERCE
Under the Paperwork Reduction Act of 1995, no persons are required to respond to a collection of information unless it displays a valid OMB control number.

REQUEST FOR EXPEDITED EXAMINATION OF A DESIGN APPLICATION (37 CFR 1.155)

Application Number	TBD 29/250,485
Filing Date	11/16/2006
First Named Inventor	Jenny T. Lam
Title	Animated Image for a Portion of a Display Screen
Atty Docket Number	013797.02622

ADDRESS TO:
MAIL STOP EXPEDITED DESIGN
COMMISSIONER FOR PATENTS
P.O. Box 1450
Alexandria, VA 22313-1450

This is a request for expedited examination of a design application under 37 CFR 1.155.

NOTE: If the Request made by this form accompanies original application papers, include form PTO/SB/18 "Design Patent Application Transmittal" or its equivalent.

A preexamination search was conducted. The field of search was:

Class D14 (subclasses 374, 485, 486, 487, 488, 489, 490, 491, 492, 493, 494, 495); Class D18 (subclasses 24, 25, 26, 27, 28, 29, 30, 31, 32, 33); Class D19 (subclasses 6, 7); Class D20 (subclasses 11, 18); Class D21subclasses (324, 325, 326, 327, 328, 329, 330, 331, 332, 333); Class 345 (subclasses 683, 902); and Class 715 (subclasses 764, 771, 773, 775, 776, 835, 836, 837, 838, 839, 846, 976)

Related applications: _____

If not previously filed for the above-identified application, the following items required by 37 CFR 1.155 are enclosed:
- Formal drawings (see 37 CFR 1.84).
- The fee set forth in 37 CFR 1.17(k).
- An information disclosure statement in compliance with 37 CFR 1.98.

11-27-06
Approved
Jacqueline M. Stone
Jacqueline M. Stone, Director
Technology Center 1700

/Robert S. Katz/ — Signature

November 16, 2006 — Date

Robert S. Katz — Typed or printed name

36,402 — Registration Number, if applicable

(202) 824-3000 — Telephone Number

WARNING: Information on this form may become public. Credit card information should not be included on this form. Provide credit card information and authorization on PTO-2038.

UNITED STATES PATENT AND TRADEMARK OFFICE

Commissioner for Patents
United States Patent and Trademark Office
P.O. Box 1450
Alexandria, VA 22313-1450
www.uspto.gov

GENERAL ELECTRIC CO.
GLOBAL PATENT OPERATION
187 Danbury Road
Suite 204
Wilton CT 06897-4122

COPY MAILED

JUN 3 0 2008

OFFICE OF PETITIONS

In re Application of :
Rosenfelder, et al. :
Application No. 29/250,516 : ON PETITION
Filed: November 17, 2006 :
Attorney Docket No. 09HR156925 :
For: DOOR FOR A REFRIGERATOR

This is a decision on petition, filed October 18, 2007, requesting revival of the above-identified application.

The petition under 37 CFR 1.137(a) is **DISMISSED**.

Any reconsideration petition must be submitted within TWO (2) MONTHS from the mail date of this decision. Extensions of time under 37 CFR 1.136(a) are permitted. The reconsideration request should include a cover letter entitled "Petition under 37 CFR 1.137(a)." This is **not** final agency action within the meaning of 5 U.S.C. § 704.

This application was held abandoned for failure to timely pay the issue fee and submit a supplemental executed declaration on or before September 7, 2007, as required by the Notice of Allowance and Fee(s) Due and the Notice of Allowability, respectively. Both Notices were available for viewing on June 7, 2007. A Notice of Abandonment was issued on October 3, 2007.

Petitioners assert that the Notices dated June 7, 2007 were not received, docketed or uploaded into petitioners' paperless system. Therefore, petitioners assert the delay in responding to the Notices was unavoidable.

A grantable petition to revive an abandoned application under 37 CFR 1.137(a) must be accompanied by (1) the required reply, unless previously filed.; (2) the petition fee as set forth in § 1.17(l); (3) a showing to the satisfaction of the Director that the entire delay in filing the required reply from the due date for the reply until the filing of a grantable petition pursuant to this paragraph was unavoidable; and (4) any terminal disclaimer (and fee as set forth in § 1.20 (d)) required pursuant to paragraph (c) of this section.

This petition does not satisfy requirement (3) above.

With respect to (3), the showing of record is inadequate to establish unavoidable delay within the meaning of 37 CFR 1.137(a). Specifically, an application is "unavoidably" abandoned only where petitioner, or counsel for petitioner, takes all action necessary for a proper response to the outstanding Office action, but through the intervention of unforeseen circumstances, such as failure of mail, telegraph, telefacsimile, or the negligence of otherwise reliable employees, the response is not timely received in the Office. Ex parte Pratt, 1887 Dec. Comm'r Pat. 31 (Comm'r Pat. 1887).

The Director may revive an abandoned application if the delay in responding to the relevant outstanding Office requirement is shown to the satisfaction of the Director to have been "unavoidable". 35 U.S.C. § 133. Decisions on reviving abandoned applications have adopted the reasonably prudent person standard in determining if the delay was unavoidable. Ex parte Pratt, 1887 Dec. Comm'r Pat. 31, 32-33 (Comm'r Pat. 1887)(the term 'unavoidable' "is applicable to ordinary human affairs, and requires no more or greater care or diligence than is generally used and observed by prudent and careful men in relation to their most important business"); In re Mattullath, 38 App. D.C. 497, 514-15 (D.C. Cir. 1912); Ex parte Henrich, 1913 Dec. Comm'r Pat. 139, 141 (Comm'r Pat. 1913). In addition, decisions on revival are made on a "case-by-case basis, taking all the facts and circumstances into account." Smith v. Mossinghoff, 671 F.2d 533, 538, 213 USPQ 977, 982 (D.C. Cir. 1982). Finally, a petition to revive an application as unavoidably abandoned cannot be granted where a petitioner has failed to meet his or her burden of establishing the cause of the unavoidable delay. Haines v. Quigg, 673 F. Supp. 314, 5 USPQ2d 1130 (N.D. Ind. 1987).

Applicants' representative is a participant in the Office's E-Notification program, wherein applicant's representative receives a once daily e-mail notification of all applications in which outgoing Office correspondence has been issued. A review of the record indicates that e-mail notification of the Notice of Allowance and Fee(s) Due and the Notice of Allowability was sent on June 8, 2007. On June 7, 2007 the Notices were uploaded into IFW. Therefore, the Notices were available for viewing on June 8, 2007.

The declarations supporting the petition state that declarants could not find any evidence that the Notices had been received, had been docketed, or had been uploaded into applicants' representative's paperless system.

However, Office databases show that the email notification was sent on June 8, 2007 and that applicants' representative accessed and reviewed the correspondence on June 8, 2007. Later that same day, applicants' representative, Carol Knight, sent an email, which indicates applicants' representative attempted to access the application in PAIR but asserts she did not see it. See enclosed email.

Unfortunately Ms. Knight replied to an automated email address and the Office doesn't as common practice look at this email box for user comments. The Office has informed beta users to email the EBC or the PAIR Team for any e-Office Action issues.

The Notices were uploaded by June 8, 2007, when applicants' representative attempted to access the correspondence. Applicants' representative did not initially contact the Office in an appropriate manner and did not follow up after the Office failed to respond to the June 8, 2007 email.

The petition under 37 CFR 1.137(a) is dismissed.

The reply to the Notices appears to be acceptable. The June 7, 2007 Notice of Allowability required applicants to submit a supplemental declaration that states that the person making the declaration acknowledges the duty to disclose to the Office all information known to the person to be material to patentability as defined in 37 CFR 1.56. The declaration filed on November 17, 2006 stated that applicants acknowledged the duty to disclose to the Office all information known to be material to examination of the application in accordance with 37 CFR 1.56.

However on February 12, 2008, an Official Gazette Notice was published that stated for pending applications, the Office is *sua sponte* waiving the express language requirement of 37 CFR 1.63(b)(3) to the extent that a declaration containing the words "material to examination" will be accepted as acknowledging applicants' duty to disclose information material to patentability as defined by 37 CFR 1.56. Therefore, the requirement set in the June 7, 2007 Notice of Allowability was, in effect, withdrawn by the OG Notice entitled, "Duty of Disclosure Language Set Forth in Oaths or Declarations Filed in Nonprovisional Patent Applications." 1327 OG 112 (February 12, 2008).

Petitioners filed four terminal disclaimers executed by an attorney of record. Only one is required. Deposit account no. 09-0470 will be credited $390.00.

ALTERNATIVE VENUE

\

Petitioners should strongly consider filing a petition under 37 CFR 1.137(b).

Public Law 97-247, § 3, 96 Stat. 317 (1982), which revised patent and trademark fees, amended 35 U.S.C. § 41(a)(7) to provide for the revival of an "unintentionally" abandoned application without a showing that the delay in prosecution or in late payment of an issue fee was "unavoidable." This amendment to 35 U.S.C. § 41(a)(7) has been implemented in 37 CFR 1.137(b).

A grantable petition pursuant to 37 CFR 1.137(b) must be accompanied by (1) the required reply, unless previously filed; (2) the petition fee as set forth in 37 CFR 1.17(m); (3) a statement that the **entire** delay in filing the required reply from the due date for the reply until the filing of a grantable petition pursuant to 37 CFR 1.137(b) was unintentional. The Director may require additional information where there is a question whether the delay was unintentional; and (4) any terminal disclaimer (and fee set forth in 37 CFR 1.20(d)) required pursuant to 37 CFR 1.137(d).

The filing of a petition under 37 CFR 1.137(b) cannot be intentionally delayed and therefore must be filed promptly. A person seeking revival due to unintentional delay can not make a statement that the delay was unintentional unless the entire delay, including the delay from the date it was discovered that the application was abandoned until the filing of the petition to revive under 37 CFR 1.137(b), was unintentional. A statement that the delay was unintentional is not appropriate if petitioners intentionally delayed the filing of a petition for revival under 37 CFR 1.137(b).

Further correspondence with respect to this matter should be addressed as follows:

By mail: Mail Stop PETITION
Commissioner for Patents
Post Office Box 1450
Alexandria, VA 22313-1450

By hand: U.S. Patent and Trademark Office
Customer Service Window, Mail Stop Petition
Randolph Building
401 Dulany Street
Alexandria, VA 22314

By FAX: (571) 273-8300 – ATTN: Office of Petitions

Telephone inquiries concerning this decision should be directed to the undersigned at (571) 272-3230.

Shirene Willis Brantley

Shirene Willis Brantley
Senior Petitions Attorney
Office of Petitions

Enclosure: email between Carol R. Knight and Office, dated June 8, 2007

Willis, Eleanor

From: Knight, Carol R (GE, Corporate, consultant) [carol.r.knight@ge.com]
Posted At: Friday, June 08, 2007 9:34 AM
Conversation: Private PAIR Correspondence Notification for Customer Number 52082
Posted To: Microsoft Outlook Embedded Message

Subject: RE: Private PAIR Correspondence Notification for Customer Number 52082

Attention: USPTO

I have reviewed our Private PAIR Image File Wrapper and the attached referred correspondence is not available. Please advise if this was sent in error. Thanks

Carol Knight
GE Global Patent Operation
Consultant/GPO Docketing

T 203-761-2531
F 203-761-1924
D 8*265-2531
E carol.r.knight@ge.com

187 Danbury Road, Suite 204
Wilton, CT 06897
USA

-----Original Message-----
From: PAIR_eOfficeAction@USPTO.GOV [mailto:PAIR_eOfficeAction@USPTO.GOV]
Sent: Friday, June 08, 2007 5:50 AM
To: ~Corp GPO Mail; Carnaroli, Allyson J (GE, Corporate)
Cc: PAIR_eOfficeAction@USPTO.GOV
Subject: Private PAIR Correspondence Notification for Customer Number 52082

Jun 08, 2007 05:50:10 AM

Dear PAIR Customer:

GENERAL ELECTRIC CO.GLOBAL PATENT OPERATION
187 Danbury Road Suite 204
Wilton, CT 06897-4122
UNITED STATES

The following USPTO patent application(s) associated with your Customer Number, 52082, have new outgoing correspondence. This correspondence is now available for viewing in Private PAIR.

The official date of notification of the outgoing correspondence will be indicated on the form PTOL-90 accompanying the correspondence.

Application	Attorney Docket No.
29250516	09HR156925

To view your correspondence online or update your email addresses, please visit us anytime at https://sportal.uspto.gov/secure/myportal/privatepair.

If you have any questions, please email the Electronic Business Center (EBC) at EBC@uspto.gov or call 1-866-217-9197 during the following hours:

Monday - Friday 6:00 a.m. to 12:00 a.m. Eastern Standard Time (EST)

Thank you for prompt attention to this notice,

UNITED STATES PATENT AND TRADEMARK OFFICE
PATENT APPLICATION INFORMATION RETRIEVAL SYSTEM

UNITED STATES PATENT AND TRADEMARK OFFICE

Commissioner for Patents
United States Patent and Trademark Office
P.O. Box 1450
Alexandria, VA 22313-1450
www.uspto.gov

GENERAL ELECTRIC CO.
GLOBAL PATENT OPERATION
187 Danbury Road
Suite 204
Wilton CT 06897-4122

COPY MAILED

OCT 14 2008

OFFICE OF PETITIONS

In re Application of :
Rosenfelder, et al. :
Application No. 29/250,516 : ON PETITION
Filed: November 17, 2006 :
Attorney Docket No. 09HR156925 :
For: DOOR FOR A REFRIGERATOR

This is a decision on petition, filed July 11, 2008, requesting revival of the above-identified application.

The petition under 37 CFR 1.137(b) is **GRANTED**.

This application was held abandoned for failure to timely pay the issue fee on or before September 7, 2007, as required by the Notice of Allowance and Fee(s) Due. The Notice available for viewing on June 7, 2007. A Notice of Abandonment was issued on October 3, 2007.

The petition satisfies the requirements of 37 CFR 1.137(b) in that petitioner has supplied (1) the reply in the form of the $820.00 issue fee, (2) the petition fee of $1,540.00, (3) a proper statement of unintentional delay, and (4) a terminal disclaimer and $130.00 fee as required by 37 CFR 1.137(d). Accordingly, the failure to timely pay the issue fee as required by the Notice of Allowance and Fee(s) Due is accepted as being unintentionally delayed.

The terminal disclaimer is accepted and has been made of record. Any continuing application filed from this application must contain a copy of the terminal disclaimer. The copy of the terminal disclaimer must be filed with a cover letter requesting the terminal disclaimer be recorded on the continuing application. A copy of this decision should be attached to the cover letter.

Petitioner has filed another terminal disclaimer with the present petition. An acceptable terminal disclaimer was filed on October 18, 2007. Therefore, the $130.00 fee submitted with the presently filed terminal disclaimer will be refunded to deposit account no. 09-0470.

This application is being referred to the Office of Data Management for processing into a patent.

Telephone inquiries concerning this decision should be directed to the undersigned at (571) 272-3230.

Shirene Willis Brantley

Shirene Willis Brantley
Senior Petitions Attorney
Office of Petitions

UNITED STATES PATENT AND TRADEMARK OFFICE

Commissioner for Patents
United States Patent and Trademark Office
P.O. Box 1450
Alexandria, VA 22313-1450
www.uspto.gov

THE PROCTER & GAMBLE COMPANY
GLOBAL LEGAL DEPARTMENT - IP
SYCAMORE BUILDING - 4TH FLOOR
299 EAST SIXTH STREET
CINCINNATI OH 45202

COPY MAILED

OCT 31 2008

OFFICE OF PETITIONS

In re Application of	:	
Born, et al.	:	
Application No. 29/250,520	:	DECISION ON PETITION
Filed: November 17, 2006	:	
Attorney Docket No. D-1097	:	

This is a decision on the petition to revive the above-identified application under 37 CFR 1.137(b), filed October 16, 2008.

The petition is **DISMISSED**.

Any request for reconsideration of this decision must be submitted within TWO (2) MONTHS from the mail date of this decision. Extensions of time under 37 CFR 1.136(a) are permitted. The reconsideration request should include a cover letter entitled "Renewed Petition Under 37 CFR 1.137(b)." No further petition fee is due for a renewed petition. This is **not** a final agency decision within the meaning of 5 USC 704.

The above-identified application became abandoned for failure to timely file corrected drawings in response to the Notice of Allowability, mailed April 16, 2008. This Notice set a statutory period for reply of three (3) months. No reply having been received, the application became abandoned on July 17, 2008. A Notice of Abandonment was mailed August 6, 2008.

A grantable petition under 37 CFR 1.137(b) must be accompanied by: (1) the required reply, unless previously filed; (2) the petition fee as set forth in 37 CFR 1.17(m); (3) a statement that the entire delay in filing the required reply from the due date for the reply until the filing of a grantable petition pursuant to 37 CFR 1.137(b) was unintentional; and (4) any terminal disclaimer (and fee as set forth in 37 CFR 1.20(d)) required by 37 CFR 1.137(d).

The instant petition lacks item (4). The instant application is a design application, and accordingly requires a terminal disclaimer and accompanying fee. See 37 CFR 1.137(d).

Receipt of the $1620 petition fee is acknowledged. No additional petition fee is required on renewed petition.

Further correspondence concerning this application should be addressed as follows:

By mail: Mail Stop Petitions
Commissioner for Patents
P.O. Box 1450
Alexandria VA 22313-1450

By FAX: (571)273-8300
Attn: Office of Petitions

Telephone inquiries concerning this decision should be directed to the undersigned at 571-272-3207.

Cliff Congo
Petitions Attorney
Office of Petitions

UNITED STATES PATENT AND TRADEMARK OFFICE

Commissioner for Patents
United States Patent and Trademark Office
P.O. Box 1450
Alexandria, VA 22313-1450
www.uspto.gov

THE PROCTER & GAMBLE COMPANY
GLOBAL LEGAL DEPARTMENT - IP
SYCAMORE BUILDING - 4TH FLOOR
299 EAST SIXTH STREET
CINCINNATI OH 45202

MAILED

FEB 17 2009

OFFICE OF PETITIONS

In re Application of	:	
Born, et al.	:	
Application No. 29/250,520	:	DECISION ON PETITION
Filed: November 17, 2006	:	
Attorney Docket No. D-1097	:	

This is a decision on the renewed petition to revive the above-identified application under 37 CFR 1.137(b), filed January 23, 2009.

The petition is **DISMISSED**.

Any request for reconsideration of this decision must be submitted within TWO (2) MONTHS from the mail date of this decision. Extensions of time under 37 CFR 1.136(a) are permitted. The reconsideration request should include a cover letter entitled "Renewed Petition Under 37 CFR 1.137(b)." No further petition fee is due for a renewed petition. This is **not** a final agency decision within the meaning of 5 USC 704.

The above-identified application became abandoned for failure to timely file corrected drawings in response to the Notice of Allowability, mailed April 16, 2008. This Notice set a statutory period for reply of three (3) months. No reply having been received, the application became abandoned on July 17, 2008. A Notice of Abandonment was mailed August 6, 2008. Applicants filed a petition to revive under 37 CFR 1.137(b) on October 16, 2008. However, the petition was dismissed in a decision mailed on October 31, 2008. The petition was dismissed

because applicants did not submit the required terminal disclaimer.

A grantable petition under 37 CFR 1.137(b) must be accompanied by: (1) the required reply, unless previously filed; (2) the petition fee as set forth in 37 CFR 1.17(m); (3) a statement that the entire delay in filing the required reply from the due date for the reply until the filing of a grantable petition pursuant to 37 CFR 1.137(b) was unintentional; and (4) any terminal disclaimer (and fee as set forth in 37 CFR 1.20(d)) required by 37 CFR 1.137(d).

The instant petition lacks item (3). The petition does not contain a proper S-signature pursuant to 37 CFR 1.4. The signature of the person signing must be contained between the two forward slashes. See MPEP 502.02(II).

Further correspondence concerning this application should be addressed as follows:

By mail: Mail Stop Petitions
Commissioner for Patents
P.O. Box 1450
Alexandria VA 22313-1450

By FAX: (571)273-8300
Attn: Office of Petitions

Telephone inquiries concerning this decision should be directed to the undersigned at 571-272-3207.

Cliff Congo
Petitions Attorney
Office of Petitions

UNITED STATES PATENT AND TRADEMARK OFFICE

Commissioner for Patents
United States Patent and Trademark Office
P.O. Box 1450
Alexandria, VA 22313-1450
www.uspto.gov

THE PROCTER & GAMBLE COMPANY
GLOBAL LEGAL DEPARTMENT - IP
SYCAMORE BUILDING - 4TH FLOOR
299 EAST SIXTH STREET
CINCINNATI OH 45202

COPY MAILED

MAR 30 2009

OFFICE OF PETITIONS

In re Application of	:	
Born, et al.	:	
Application No. 29/250,520	:	DECISION ON PETITION
Filed: November 17, 2006	:	
Attorney Docket No. D-1097	:	

This is a decision on the renewed petition to revive the above-identified application under 37 CFR 1.137(b), filed March 5, 2009.

The petition is **GRANTED**.

The above-identified application became abandoned for failure to timely file corrected drawings in response to the Notice of Allowability, mailed April 16, 2008. This Notice set a statutory period for reply of three (3) months. No reply having been received, the application became abandoned on July 17, 2008. A Notice of Abandonment was mailed August 6, 2008.

Applicants filed a petition to revive under 37 CFR 1.137(b) on October 16, 2008. However, the petition was dismissed in a decision mailed on October 31, 2008. The petition was dismissed because applicants did not submit the required terminal disclaimer. Applicants filed a renewed petition on January 23, 2009. However, that petition was dismissed in a decision mailed on February 17, 2009. That petition was dismissed because it lacked a proper S-signature.

With the instant renewed petition, petitioner has submitted a petition containing a proper S-signature. The other requirements for a grantable petition under 37 CFR 1.137(b) were previously satisfied in the earlier filed petitions.

The application is being forwarded to the Office of Data Management for processing into a patent.

Telephone inquiries concerning this decision should be directed to the undersigned at 571-272-3207.

Cliff Congo
Petitions Attorney
Office of Petitions

UNITED STATES PATENT AND TRADEMARK OFFICE

Commissioner for Patents
United States Patent and Trademark Office
P.O. Box 1450
Alexandria, VA 22313-1450
www.uspto.gov

QUARLES & BRADY LLP
411 E. WISCONSIN AVENUE
SUITE 2040
MILWAUKEE WI 53202-4497

COPY MAILED

OCT 1 4 2008

OFFICE OF PETITIONS

In re Application of	:
Rafael A. Rexach	: DECISION GRANTING PETITION
Application No. 29/250,587	: UNDER 37 CFR 1.313(c)(3) (CPA)
Filed: November 22, 2006	:
Attorney Docket No. 550299.00310	:

This is a decision on the petition under 37 CFR 1.313(c)(3), filed October 7, 2008, to withdraw the above-identified application from issue after payment of the issue fee.

The petition is **GRANTED**.

The above-identified application is hereby withdrawn from issue in favor of a continued prosecution application (CPA) under 37 CFR 1.53(d).

Petitioner is advised that the issue fee paid on September 17, 2008 in the parent application is not refundable nor can it be applied towards any new Notice of Allowance which may issue on the CPA filed October 7, 2008.

Telephone inquiries should be directed to Terri Williams at (571) 272-2991.

This matter is being referred to Technology Center AU 2914 for processing of the CPA and consideration of the concurrently filed information disclosure statement.

Terri Williams
Petitions Examiner
Office of Petitions

UNITED STATES PATENT AND TRADEMARK OFFICE

COMMISSIONER FOR PATENTS
UNITED STATES PATENT AND TRADEMARK OFFICE
P.O. BOX 1450
ALEXANDRIA, VA 22313-1450
www.uspto.gov

CROSSLEY PATENT LAW
236 South Third Street
#287
MONTROSE CO 81401

COPY MAILED
DEC 18 2008

In re Application of :
Ector C. GOMEZ :
Application No. 29/250,623 : DECISION ON PETITION
Filed: November 22, 2006 :
Attorney Docket No.06-10-26.1DA :

This is a decision on the renewed petition under 37 CFR 1.137(b), filed April 17, 2008, to revive the above-identified design application.

The petition is **DISMISSED**.

Any request for reconsideration of this decision must be submitted within TWO (2) MONTHS from the mail date of this decision. Extensions of time under 37 CFR 1.136(a) are permitted. The reconsideration request should include a cover letter entitled "Renewed Petition under 37 CFR 1.137(b)." This is not a final agency action within the meaning of 5 U.S.C. § 704.

The application became abandoned for failure to timely pay the issue fee on or before April 03, 2008, as required by the Notice of Allowance and Fee(s) Due, mailed January 03, 2008 which set a statutory period for reply of three (3) months. Accordingly, the application became abandoned on April 04, 2008. A Notice of Abandonment was mailed on April 24, 2008.

A grantable petition under 37 CFR 1.137(b) must be accompanied by: (1) the required reply, unless previously filed; (2) the petition fee as set forth in 37 CFR 1.17(m); (3) a statement that the entire delay in filing the required reply from the due date for the reply until the filing of a grantable petition pursuant to 37 CFR 1.137(b) was unintentional; and (4) any terminal disclaimer (and fee as set forth in 37 CFR 1.20(d)) required by 37 CFR 1.137(d). Where there is a question as to whether either the abandonment or the delay in filing a petition under 37 CFR 1.137 was unintentional, the Director may require additional

information. See MPEP 711.03(c)(II)(C) and (D). The instant petition lacks item(s) (3).

In this regard, petitioner's attention is directed to 37 CFR 1.33(b), which states.

(b) Amendments and other papers. Amendments and other papers, except for written assertions pursuant to § 1.27(c)(2)(ii) of this part, filed in the application must be signed by:

(1) A registered patent attorney or patent agent of record appointed in compliance with § 1.32(b);

(2) A registered patent attorney or patent agent not of record who acts in a representative capacity under the provisions of § 1.34;

(3) An assignee as provided for under §3.71(b) of this chapter; or

(4) All of the applicants (§ 1.41(b)) for patent, unless there is an assignee of the entire interest and such assignee has taken action in the application in accordance with § 3.71 of this chapter.

An unsigned amendment (or other paper) or <u>one not properly signed by a person having authority to prosecute the application is not entered</u>. This applies, for instance, where the amendment (or other paper) is signed by only one of two applicants and the one signing has not been given a power of attorney by the other applicant.

Therefore, as the petition is not properly signed by a person having authority to prosecute the application, i.e. the signature of Mr. Mark Crossley is missing a close backslash, the petition is considered to not contain a proper statement of unintentional delay.

The terminal disclaimer is accepted and has been made of record. Any continuing application filed from this application must contain a copy of the terminal disclaimer. The copy of the terminal disclaimer must be filed with a cover letter requesting the terminal disclaimer be recorded on the continuing application. A copy of this decision should be attached to the cover letter.

The file does not indicate a change of address has been submitted, although the address given on the petition differs from the address of record. If appropriate, a change of address should be filed in accordance with MPEP 601.03. A courtesy copy of this decision is being mailed to the address given on the petition; however, the Office will mail all future correspondence solely to the address of record.

Further correspondence with respect to this matter should be addressed as follows:

By mail: Mail Stop PETITIONS
Commissioner for Patents
Post Office Box 1450
Alexandria, VA 22313-1450

By hand: Customer Service Window
Mail Stop Petitions
Randolph Building
401 Dulany Street
Alexandria, VA 22314

By fax: (703) 872-9306
ATTN: Office of Petitions

Telephone inquiries concerning this decision should be directed to K. Reichle at (571) 272-6051.

for David Bucci
Petitions Examiner
Office of Petitions

Cc: Mark Crossley
400 South Third Street
MONTROSE CO 81401

UNITED STATES PATENT AND TRADEMARK OFFICE

Commissioner for Patents
United States Patent and Trademark Office
P.O. Box 1450
Alexandria, VA 22313-1450
www.uspto.gov

CROSSLEY PATENT LAW
236 South Third Street
#287
MONTROSE CO 81401

MAILED

MAY 29 2009

OFFICE OF PETITIONS

In re Application of	:	
Ector C. Gomez	:	
Application No. 29/250,623	:	DECISION ON PETITION
Filed: November 22, 2006	:	
Attorney Docket No. 06-10-26.1DA	:	

This is a decision on the petition under 37 CFR 1.137(b), filed January 15, 2009, to revive the above-identified application.

The petition is **GRANTED**.

The application became abandoned for failure to timely pay the issue fee on or before April 03, 2008, as required by the Notice of Allowance and Fee(s) Due, mailed January 03, 2008 which set a statutory period for reply of three (3) months. Accordingly, the application became abandoned on April 04, 2008. A Notice of Abandonment was mailed on April 24, 2008.

The petition satisfies the conditions for revival pursuant to the provisions of 37 CFR 1.137(b) in that (1) the reply in the form of payment of the Issue Fee; (2) the petition fee of $770; and (3) the required statement of unintentional delay; and (4) any terminal disclaimer (and fee set forth in 37 CFR 1.20(d)) required pursuant to 37 CFR 1.137(c) have been received. Accordingly, the Issue Fee payment is accepted as having been unintentionally delayed.

Telephone inquiries concerning this decision should be directed to Ron Abelson at (571) 272-3165 or in his absence, the undersigned at (571) 272-3217.

The application file is being referred to the Office of Data Management.

David Bucci
Petitions Examiner
Office of Petitions

PTO/SB/27 (09-06)
Approved for use through 03/31/2007. OMB 0651-0031
U.S. Patent and Trademark Office; U.S DEPARTMENT OF COMMERCE
Under the Paperwork Reduction ACT of 1995, no persons are required to respond to collection of information unless it displays a valid OMB control number.

REQUEST FOR EXPEDITED EXAMINATION OF A DESIGN APPLICATION (37 CFR 1.155)

Application Number	29/250 637
Filing Date	
First Named Inventor	Jack Lo
Title	Compact Ergonomic Computer Mouse
Atty Docket Number	Compact Ergo Mouse Design

ADDRESS TO:

MAIL STOP EXPEDITED DESIGN
COMMISSIONER FOR PATENTS
P.O. Box 1450
Alexandria, VA 22313-1450

12-14-06 Approved Jacqueline M. Stone
Jacqueline M. Stone, Director
Technology Center 1700/2900

This is a request for expedited examination of a design application under 37 CFR 1.155.

NOTE: If the Request made by this form accompanies original application papers, include form PTO/SB/18 "Design Patent Application Transmittal" or its equivalent.

A preexamination search was conducted. The field of search was:

345/156,157,158,159,160,163,166,167

Related applications: _____

If not previously filed for the above-identified application, the following items required by 37 CFR 1.155 are enclosed:

- Formal drawings (see 37 CFR 1.84).
- The fee set forth in 37 CFR 1.17(k).
- An information disclosure statement in compliance with 37 CFR 1.98.

Jack Lo	Nov 25, 2006
Signature	Date
Jack Lo	40,070
Typed or printed name	Registration Number, if applicable
650 355 6666	
Telephone Number	

WARNING: Information on this form may become public. Credit card information should not be included on this form. Provide credit card information and authorization on PTO-2038.

This collection of information is required by 37 CFR 1.155. The information is required to obtain or retain a benefit by the public which is to file (and by the USPTO to process) an application. Confidentiality is governed by 35 U.S.C. 122 and 37 CFR 1.11 and 1.14. This collection is estimated to take 6 minutes to complete, including gathering, preparing, and submitting the completed application form to the USPTO. Time will vary depending upon the individual case. Any comments on the amount of time you require to complete this form and/or suggestions for reducing this burden, should be sent to the Chief Information Officer, U.S. Patent and Trademark Office, U.S. Department of Commerce, P.O. Box 1450, Alexandria, VA 22313-1450. DO NOT SEND FEES OR COMPLETED FORMS TO THIS ADDRESS. SEND TO: Commissioner for Patents, P.O. Box 1450, Alexandria, VA 22313-1450.

If you need assistance in completing the form, call 1-800-PTO-9199 and select option 2.

UNITED STATES PATENT AND TRADEMARK OFFICE

Commissioner for Patents
United States Patent and Trademark Office
P.O. Box 1450
Alexandria, VA 22313-1450
www.uspto.gov

CHEVRON CORPORATION
P.O. BOX 6006
SAN RAMON, CA 94583-0806

COPY MAILED
DEC 27 2007
OFFICE OF PETITIONS

In re Application of Vaughan et al. :
Application No. 29/250,708 :
Filing Date: November 28, 2006 :
Attorney Docket No. T-6901 :

Decision on Petition

This is a decision on the petition under 37 CFR 1.137(a), filed September 4, 2007, to revive the above-identified application.

The petition is **DISMISSED**.

Facts:

The application was filed November 28, 2006.

The application lists six inventors.

A Notice to File Missing Parts was mailed January 23, 2007. The Notice set a period for reply of two (2) months from the mail date of the Notice. The Notice required the submission of an executed oath or declaration and the required $130 surcharge.

A reply was not filed in response to the Notice to File Missing Parts. As a result, the application became abandoned as of March 24, 2007.

The instant petition was filed September 4, 2007, along with an executed declaration and the required surcharge.

Petitioner contends the delay in the submission of the declaration was unavoidable due to an inability to obtaining home addresses for the inventors.

Discussion:

A grantable petition under 37 CFR 1.137(a) must be accompanied by:

(1) the reply required to the outstanding Office action or notice, unless previously filed,

(2) the petition fee,

(3) a showing to the satisfaction of the Director that the entire delay in filing the required reply from the due date for the reply until the filing of a grantable petition pursuant to this paragraph was unavoidable, and

(4) a terminal disclaimer and fee *if* the application was filed on or before June 8, 1995 or *if* the application is a design application.

Petitioner fails to satisfy items (3) and (4) listed above.

The showing of record is not sufficient to establish to the satisfaction of the Commissioner that the delay was unavoidable within the meaning of 37 CFR 1.137(a).

In order for a party to prove unavoidable delay, the Office requires the party demonstrate the party exercised the "care or diligence tha[t] is generally used and observed by prudent and careful men in relation to their most important business."[1]

The facts in the petition fail to demonstrate the delay was unavoidable. The facts fail to discuss the dates various steps were taken to find an address for each inventor. The dates of various actions are relevant. For example, a situation where petitioner began seeking the information on November 28, 2006, would be very different than a situation where petitioner did not begin seeking the information until February of 2007.

Any request for reconsideration should fully discuss the dates on which various actions were taken. In addition, the request should fully discuss the nature of each action taken.

A terminal disclaimer was not filed with the petition.

37 CFR 1.137(d)(1) states in part, "Any petition to revive pursuant to this section in a design application must be accompanied by a terminal disclaimer and fee as set forth in § 1.321." Therefore, a terminal disclaimer is required for the instant design application.

A terminal disclaimer has not been filed. Therefore, the petition must be dismissed.

Any request for reconsideration should include a terminal disclaimer and the required fee. A copy of a terminal disclaimer form is attached.

Requesting Reconsideration:

Any request for reconsideration must be submitted within TWO (2) MONTHS from the mail date of this decision. Extensions of time under 37 CFR 1.136(a) are permitted. The reconsideration request should include a cover letter entitled "Renewed Petition under 37 CFR 1.137(a)."

---

[1] In re Mattulath, 38 App. D.C. 497, 514-15 (D.C. Cir. 1912). See also Ray v. Lehman, 55 F.3d 606, 34 U.S.P.Q.2d (BNA) 1786 (Fed. Cir. 1995) (citations omitted) ("[I]n determining whether a delay in paying a maintenance fee was unavoidable, one looks to whether the party responsible for payment of the maintenance fee exercised the due care of a reasonably prudent person.")

If petitioner cannot provide the evidence necessary to establish unavoidable delay, or simply does not wish to, petitioner may wish to consider filing a petition to revive based on unintentional abandonment under 37 CFR 1.137(b). A grantable petition pursuant to 37 CFR 1.137(b) must be accompanied by the required reply (already submitted), the required petition fee ($1,540 for a small entity), and a statement that the **entire** delay in filing the required reply from the due date for the reply until the filing of a grantable petition pursuant to 37 CFR 1.137(b) was unintentional.

A copy of a PDF "fillable" version of a blank petition under 37 CFR 1.137(b) form can be found at: http://www.uspto.gov/web/forms/sb0064_fill.pdf.

Further correspondence with respect to this matter should be addressed as follows:

By mail: Mail Stop Petition
Commissioner for Patents
P.O. Box 1450
Alexandria, VA 22313-1450

By facsimile: (571) 273-8300
Attn: Office of Petitions

By hand: U.S. Patent and Trademark Office
Customer Service Window
Randolph Building
401 Dulany Street
Alexandria, VA 22314

Telephone inquiries regarding this communication should be directed to Petitions Attorney Steven Brantley at (571) 272-3203.

Charles Steven Brantley
Senior Petitions Attorney
Office of Petitions

Attached: PTO/SB/63 Terminal Disclaimer Form

PTO/SB/63 (12-07)
Approved for use through 12/31/2007. OMB 0651-0031
U.S. Patent and Trademark Office; U.S. DEPARTMENT OF COMMERCE
Under the Paperwork Reduction Act of 1995, no persons are required to a collection of information unless it displays a valid OMB control number.

TERMINAL DISCLAIMER TO ACCOMPANY PETITION	Docket Number (Optional)

In re Application of:

Name:

Application Number:

Filed:

For:

The owner*, _____ of _____ percent interest in the above-identified application hereby disclaims a terminal part of the term of any patent granted the above-identified application equivalent to: (1) if the above-identified application is a design application, the period of abandonment of the above-identified application, and (2) if the above-identified application is a utility or plant application, the lesser of: (a) the period of abandonment of the application; or (b) the period extending beyond twenty years from the date on which the above-identified application was filed in the United States or, if the application contains a specific reference to an earlier filed application(s) under 35 U.S.C. 120, 121, or 365(c), from the date on which the earliest such application was filed. This disclaimer also applies to any patent granted on a utility or plant application filed before June 8, 1995, or a design application, that contains a specific reference under 35 U.S.C. 120, 121, or 365(c) to the above-identified application. This disclaimer is binding upon the grantee, and its successors or assigns.

Check either box 1 or 2 below, if appropriate.

1. ☐ For submissions on behalf of an organization (e.g., corporation, partnership, university, government agency, etc.), the undersigned is empowered to act on behalf of the organization.
2. ☐ The undersigned is an attorney or agent of record. Registration Number_____.

_____	_____
Signature	Date
_____	_____
Typed or Printed Name	Telephone Number

☐ Terminal disclaimer fee under 37 CFR 1.20(d) included.

WARNING: Information on this form may become public. Credit card information should not be included on this form. Provide credit card information and authorization on PTO-2038.

* Statement under 37 CFR 3.73(b) is required if terminal disclaimer is signed by the assignee (owner). Form PTO/SB/96 may be used for making this certification. See MPEP § 324.

This collection of information is required by 37 CFR 1.137. The information is required to obtain or retain a benefit by the public which is to file (and by the USPTO to process) an application. Confidentiality is governed by 35 U.S.C. 122 and 37 CFR 1.11 and 1.14. This collection is estimated to take 12 minutes to complete, including gathering, preparing, and submitting the completed application form to the USPTO. Time will vary depending upon the individual case. Any comments on the amount of time you require to complete this form and/or suggestions for reducing this burden, should be sent to the Chief Information Officer, U.S. Patent and Trademark Office, U.S. Department of Commerce, P.O. Box 1450, Alexandria, VA 22313-1450. DO NOT SEND FEES OR COMPLETED FORMS TO THIS ADDRESS. SEND TO: **Commissioner for Patents, P.O. Box 1450, Alexandria, VA 22313-1450.**

If you need assistance in completing the form, call 1-800-PTO-9199 and select option 2.

Privacy Act Statement

The **Privacy Act of 1974 (P.L. 93-579)** requires that you be given certain information in connection with your submission of the attached form related to a patent application or patent. Accordingly, pursuant to the requirements of the Act, please be advised that: (1) the general authority for the collection of this information is 35 U.S.C. 2(b)(2); (2) furnishing of the information solicited is voluntary; and (3) the principal purpose for which the information is used by the U.S. Patent and Trademark Office is to process and/or examine your submission related to a patent application or patent. If you do not furnish the requested information, the U.S. Patent and Trademark Office may not be able to process and/or examine your submission, which may result in termination of proceedings or abandonment of the application or expiration of the patent.

The information provided by you in this form will be subject to the following routine uses:

1. The information on this form will be treated confidentially to the extent allowed under the Freedom of Information Act (5 U.S.C. 552) and the Privacy Act (5 U.S.C 552a). Records from this system of records may be disclosed to the Department of Justice to determine whether disclosure of these records is required by the Freedom of Information Act.
2. A record from this system of records may be disclosed, as a routine use, in the course of presenting evidence to a court, magistrate, or administrative tribunal, including disclosures to opposing counsel in the course of settlement negotiations.
3. A record in this system of records may be disclosed, as a routine use, to a Member of Congress submitting a request involving an individual, to whom the record pertains, when the individual has requested assistance from the Member with respect to the subject matter of the record.
4. A record in this system of records may be disclosed, as a routine use, to a contractor of the Agency having need for the information in order to perform a contract. Recipients of information shall be required to comply with the requirements of the Privacy Act of 1974, as amended, pursuant to 5 U.S.C. 552a(m).
5. A record related to an International Application filed under the Patent Cooperation Treaty in this system of records may be disclosed, as a routine use, to the International Bureau of the World Intellectual Property Organization, pursuant to the Patent Cooperation Treaty.
6. A record in this system of records may be disclosed, as a routine use, to another federal agency for purposes of National Security review (35 U.S.C. 181) and for review pursuant to the Atomic Energy Act (42 U.S.C. 218(c)).
7. A record from this system of records may be disclosed, as a routine use, to the Administrator, General Services, or his/her designee, during an inspection of records conducted by GSA as part of that agency's responsibility to recommend improvements in records management practices and programs, under authority of 44 U.S.C. 2904 and 2906. Such disclosure shall be made in accordance with the GSA regulations governing inspection of records for this purpose, and any other relevant (*i.e.*, GSA or Commerce) directive. Such disclosure shall not be used to make determinations about individuals.
8. A record from this system of records may be disclosed, as a routine use, to the public after either publication of the application pursuant to 35 U.S.C. 122(b) or issuance of a patent pursuant to 35 U.S.C. 151. Further, a record may be disclosed, subject to the limitations of 37 CFR 1.14, as a routine use, to the public if the record was filed in an application which became abandoned or in which the proceedings were terminated and which application is referenced by either a published application, an application open to public inspection or an issued patent.
9. A record from this system of records may be disclosed, as a routine use, to a Federal, State, or local law enforcement agency, if the USPTO becomes aware of a violation or potential violation of law or regulation.

UNITED STATES PATENT AND TRADEMARK OFFICE

Commissioner for Patents
United States Patent and Trademark Office
P.O. Box 1450
Alexandria, VA 22313-1450
www.uspto.gov

COPY MAILED

JUN 19 2008

OFFICE OF PETITIONS

CHEVRON CORPORATION
P.O. BOX 6006
SAN RAMON, CA 94583-0806

In re Application of Vaughan et al. :
Application No. 29/250,708 : Decision on Petition
Filing Date: November 28, 2006 :
Attorney Docket No. T-6901 :

This is a decision on the petition under 37 CFR 1.137(b), filed March 3, 2008, to revive the above-identified application.

The petition is **DISMISSED**.

A Notice to File Missing Parts was mailed January 23, 2007. The Notice set a period for reply of two (2) months from the mail date of the Notice. The Notice required the submission of an executed oath or declaration and the required $130 surcharge. A reply was not filed in response to the Notice to File Missing Parts. As a result, the application became abandoned as of March 24, 2007.

A grantable petition under 37 CFR 1.137(b) must be accompanied by:

(1) the reply required to the outstanding Office action or notice, unless previously filed,
(2) the petition fee,
(3) a statement that the entire delay in filing the required reply from the due date for the reply until the filing of a grantable petition pursuant to 37 CFR 1.137(b) was unintentional, and
(4) a terminal disclaimer and fee if the application was filed on or before June 8, 1995 or if the application is a design application.

Petitioner fails to satisfy items (2) and (4) listed above.

As to item (2) above, the petition states the petition is accompanied by payment of $1,540 for the petition fee. However, the Office is unable to locate the fee. Petitioner should resubmit the petition fee.

As to item (3) above, 37 CFR 1.137(d)(1) states in part, "Any petition to revive pursuant to this section in a design application must be accompanied by a terminal disclaimer and fee as set forth

in § 1.321." Therefore, a terminal disclaimer is required for the instant design application. A terminal disclaimer has not been filed. Therefore, the petition must be dismissed.

Any request for reconsideration should include the petition fee of $1,540, a terminal disclaimer, and the required terminal disclaimer fee.

Any request for reconsideration must be submitted within TWO (2) MONTHS from the mail date of this decision. Extensions of time under 37 CFR 1.136(a) are permitted. The reconsideration request should include a cover letter entitled "Renewed Petition under 37 CFR 1.137(b)."

Further correspondence with respect to this matter should be addressed as follows:

By mail: Mail Stop Petition
Commissioner for Patents
P.O. Box 1450
Alexandria, VA 22313-1450

By facsimile: (571) 273-8300
Attn: Office of Petitions

By hand: U.S. Patent and Trademark Office
Customer Service Window
Randolph Building
401 Dulany Street
Alexandria, VA 22314

Telephone inquiries regarding this communication should be directed to Petitions Attorney Steven Brantley at (571) 272-3203.

Charles Steven Brantley
Senior Petitions Attorney
Office of Petitions

UNITED STATES PATENT AND TRADEMARK OFFICE

Commissioner for Patents
United States Patent and Trademark Office
P.O. Box 1450
Alexandria, VA 22313-1450
www.uspto.gov

CHEVRON CORPORATION
P.O. BOX 6006
SAN RAMON, CA 94583-0806

COPY MAILED

JAN 0 9 2009

OFFICE OF PETITIONS

In re Application of Vaughan et al. :
Application No. 29/250,708 :
Filing Date: November 28, 2006 :
Attorney Docket No. T-6901 :

Decision on Petition

This is a decision on the petition under 37 CFR 1.137(b), filed August 19, 2008, to revive the above-identified application.

The petition is **granted**.

A Notice to File Missing Parts was mailed January 23, 2007. The Notice set a period for reply of two (2) months from the mail date of the Notice. The Notice required the submission of an executed oath or declaration and the required $130 surcharge. A reply was not filed in response to the Notice to File Missing Parts. As a result, the application became abandoned as of March 24, 2007.

The instant petition requests revival of the application.

A grantable petition under 37 CFR 1.137(b) must be accompanied by:

(1) the reply required to the outstanding Office action or notice, unless previously filed,
(2) the petition fee,
(3) a statement that the entire delay in filing the required reply from the due date for the reply until the filing of a grantable petition pursuant to 37 CFR 1.137(b) was unintentional, and
(4) a terminal disclaimer and fee if the application was filed on or before June 8, 1995 or if the application is a design application.

Petitioner previously submitted a reply to the Notice to File Missing Parts. Petitioner has submitted the required petition fee of $1,540. Petitioner previously stated the entire delay in filing the required reply from the due date for the reply until the filing of a grantable petition pursuant to 37 CFR 1.137(b) was unintentional. Petitioner has filed a proper terminal disclaimer and the required fee.

Petitioner has met the requirements to revive the above-identified application pursuant to 37 CFR 1.137(b). Therefore, the petition is granted and the application is revived.

The Office of Patent Application Processing will be informed of the instant decision and will prepare the application for examination in due course.

Telephone inquiries regarding this communication should be directed to Petitions Attorney Steven Brantley at (571) 272-3203.

Charles Steven Brantley
Senior Petitions Attorney
Office of Petitions

UNITED STATES PATENT AND TRADEMARK OFFICE

Commissioner for Patents
United States Patent and Trademark Office
P.O. Box 1450
Alexandria, VA 22313-1450
www.uspto.gov

PHILIP S. JOHNSON
JOHNSON & JOHNSON
ONE JOHNSON & JOHNSON PLAZA
NEW BRUNSWICK NJ 08933-7003

COPY MAILED

MAY 0 8 2009

OFFICE OF PETITIONS

In re Application of	:	
Rosato et al.	:	
Application No.: 29/250724	:	ON PETITION
Filing or 371(c) Date: 11/29/2006	:	
Attorney Docket Number: JBP5039USDP	:	

This is a decision on the Petition for Revival of an Application for Patent Abandoned Unintentionally Under 37 C.F.R. § 1.137(b), filed March 16, 2009.

This Petition is hereby **granted**.

The above-identified application became abandoned for failure to timely and properly reply to the final Office action, mailed August 22, 2008. The Office action set a three (3) month period for reply, and provided for extensions of time under 37 CFR 1.136(a).. Applicant filed a reply in the form of a Request for Continued Examination ("RCE") and Amendment on February 23, 2009; however, a RCE is inapplicable to an application for a Design patent[1]. Applicant was so notified in a Notice of Improper RCE, mailed February 26, 2009. No complete and proper reply having been received, the application became abandoned on November 23, 2008. A Notice of Abandonment was mailed March 31, 2009.

The petition satisfies the requirements of 37 CFR 1.137(b) in that petitioner has supplied (1) the reply in the form of a request for Continued Prosecution Application ("CPA"); (2) the petition fee, (3) a proper statement of unintentional delay, and (4) a terminal disclaimer and fee as required by 37 CFR 1.137(d). Accordingly, the failure to timely and properly reply to the final Office action as required by the final Office action is accepted as being unintentionally delayed.

The terminal disclaimer is accepted and has been made of record. Any continuing application filed from this application must contain a copy of the terminal disclaimer. The copy of the terminal disclaimer must be filed with a cover letter requesting the terminal disclaimer be

[1] Applicant may request a refund of the RCE fee by writing to the Office of Finance, Refund Section. A copy of this Decision should be included with the request.

recorded on the continuing application. A copy of this decision should be attached to the cover letter.

This application is being referred to Technology Center Art Unit 2900 for processing of the CPA, and for continued examination in the normal course of business.

Telephone inquiries concerning this decision should be directed to the undersigned at (571) 272-3232.

/Derek L. Woods/
Derek L. Woods
Attorney
Office of Petitions

PTO/SB/27 (09-04)
Approved for use through 07/31/2006. OMB 0651-0031
U.S. Patent and Trademark Office; U.S. DEPARTMENT OF COMMERCE
Under the Paperwork Reduction Act of 1995, no persons are required to respond to a collection of information unless it displays a valid OMB control number.

REQUEST FOR EXPEDITED EXAMINATION OF A DESIGN APPLICATION (37 CFR 1.155)

Application Number	29/250,773
Filing Date	November 30, 2006
First Named Inventor	Todd Smith
Title	BALL
Atty Docket Number	015127.00859

ADDRESS TO:
MAIL STOP EXPEDITED DESIGN
COMMISSIONER FOR PATENTS
P.O. Box 1450
Alexandria, VA 22313-1450

This is a request for expedited examination of a design application under 37 CFR 1.155.

NOTE: If the Request made by this form accompanies original application papers, include form PTO/SB/18 "Design Patent Application Transmittal" or its equivalent.

A preexamination search was conducted. The field of search was:

D21/698, 707, 708, 709, 710, 711, 712, 713 and 714

473/ 42, 125, 569, 593, 594, 595, 596, 597, 598, 599, 600, 601, 602, 603, 604, 605, 606, 607, 608, 609, 610, 611, 612, 613, 614 for 134 and for 145

Related applications: 015127.00858 and 00860

If not previously filed for the above-identified application, the following items required by 37 CFR 1.155 are enclosed:
- Formal drawings (see 37 CFR 1.84).
- The fee set forth in 37 CFR 1.17(k).
- An information disclosure statement in compliance with 37 CFR 1.98.

1-29-07
Approved
Jacqueline M. Stone
Jacqueline M. Stone, Director
Technology Center 1700/2900

/Richard S. Stockton/ — Signature

January 24, 2007 — Date

Richard S. Stockton — Typed or printed name

50,330 — Registration Number, if applicable

(202) 824-3000 — Telephone Number

WARNING: Information on this form may become public. Credit card information should not be included on this form. Provide credit card information and authorization on PTO-2038.

This collection of information is required by 37 CFR 1.155. The information is required to obtain or retain a benefit by the public which is to file (and by the USPTO to process) an application. Confidentiality is governed by 35 U.S.C. 122 and 37 CFR 1.11 and 1.14. This collection is estimated to take 6 minutes to complete, including gathering, preparing, and submitting the completed application form to the USPTO. Time will vary depending upon the individual case. Any comments on the amount of time you require to complete this form and/or suggestions for reducing this burden, should be sent to the Chief Information Officer, U.S. Patent and Trademark Office, U.S. Department of Commerce, P.O. Box 1450, Alexandria, VA 22313-1450. DO NOT SEND FEES OR COMPLETED FORMS TO THIS ADDRESS. SEND TO: Mail Stop Expedited Design, Commissioner for Patents, P.O. Box 1450, Alexandria, VA 22313-1450.
If you need assistance in completing the form, call 1-800-PTO-9199 and select option 2.

PTO/SB/27 (09-04)
Approved for use through 07/31/2006. OMB 0651-0031
U.S. Patent and Trademark Office; U.S. DEPARTMENT OF COMMERCE
Under the Paperwork Reduction Act of 1995, no persons are required to respond to a collection of information unless it displays a valid OMB control number.

REQUEST FOR EXPEDITED EXAMINATION OF A DESIGN APPLICATION (37 CFR 1.155)

Application Number	29/250,775
Filing Date	November 30, 2006
First Named Inventor	Todd Smith
Title	BALL
Atty Docket Number	015127.00860

ADDRESS TO:
MAIL STOP EXPEDITED DESIGN
COMMISSIONER FOR PATENTS
P.O. Box 1450
Alexandria, VA 22313-1450

This is a request for expedited examination of a design application under 37 CFR 1.155.

NOTE: If the Request made by this form accompanies original application papers, include form PTO/SB/18 "Design Patent Application Transmittal" or its equivalent.

A preexamination search was conducted. The field of search was:

D21/698, 707, 708, 709, 710, 711, 712, 713 and 714
473/ 42, 125, 569, 593, 594, 595, 596, 597, 598, 599, 600, 601, 602, 603, 604, 605, 606, 607, 608, 609, 610, 611, 612, 613, 614 for 134 and for 145

Related applications: 015127.00858 and 00859

If not previously filed for the above-identified application, the following items required by 37 CFR 1.155 are enclosed:
- Formal drawings (see 37 CFR 1.84).
- The fee set forth in 37 CFR 1.17(k).
- An information disclosure statement in compliance with 37 CFR 1.98.

1-29-07
Approved
Jacqueline M. Stone
Jacqueline M. Stone, Director
Technology Center 2700/2900

/Richard S. Stockton/
Signature

January 24, 2007
Date

Richard S. Stockton
Typed or printed name

50,330
Registration Number, if applicable

(202) 824-3000
Telephone Number

WARNING: Information on this form may become public. Credit card information should not be included on this form. Provide credit card information and authorization on PTO-2038.

This collection of information is required by 37 CFR 1.155. The information is required to obtain or retain a benefit by the public which is to file (and by the USPTO to process) an application. Confidentiality is governed by 35 U.S.C. 122 and 37 CFR 1.11 and 1.14. This collection is estimated to take 6 minutes to complete, including gathering, preparing, and submitting the completed application form to the USPTO. Time will vary depending upon the individual case. Any comments on the amount of time you require to complete this form and/or suggestions for reducing this burden, should be sent to the Chief Information Officer, U.S. Patent and Trademark Office, U.S. Department of Commerce, P.O. Box 1450, Alexandria, VA 22313-1450. DO NOT SEND FEES OR COMPLETED FORMS TO THIS ADDRESS. SEND TO: **Mail Stop Expedited Design, Commissioner for Patents, P.O. Box 1450, Alexandria, VA 22313-1450.**
If you need assistance in completing the form, call 1-800-PTO-9199 and select option 2.

PTO/SB/27 (09-06)
Approved for use through 03/31/2007. OMB 0651-0031
U.S. Patent and Trademark Office; U.S DEPARTMENT OF COMMERCE
Under the Paperwork Reduction ACT of 1995, no persons are required to respond to collection of information unless it displays a valid OMB control number.

REQUEST FOR EXPEDITED EXAMINATION OF A DESIGN APPLICATION (37 CFR 1.155)

Application Number	29/250 830
Filing Date	December 1, 2006
First Named Inventor	Todd Huthmaker
Title	Portion of a Shoe Upper
Atty Docket Number	015127.00774

ADDRESS TO:

MAIL STOP EXPEDITED DESIGN
COMMISSIONER FOR PATENTS
P.O. Box 1450
Alexandria, VA 22313-1450

12-6-06 Approved Jacqueline M. Stone
Jacqueline M. Stone, Director
Technology Center 1700/2900

This is a request for expedited examination of a design application under 37 CFR 1.155.

NOTE: If the Request made by this form accompanies original application papers, include form PTO/SB/18 "Design Patent Application Transmittal" or its equivalent.

A preexamination search was conducted. The field of search was:

D2, 896, 902, 907, 908, 943, 944, 945, 946, 969, 972, 973, 974, 977

Related applications: _____

If not previously filed for the above-identified application, the following items required by 37 CFR 1.155 are enclosed:

- Formal drawings (see 37 CFR 1.84).
- The fee set forth in 37 CFR 1.17(k).
- An information disclosure statement in compliance with 37 CFR 1.98.

Signature	December 1, 2006 Date
Darrell G. Mottley Typed or printed name	42,912 Registration Number, if applicable
202-824-3000 Telephone Number	

WARNING: Information on this form may become public. Credit card information should not be included on this form. Provide credit card information and authorization on PTO-2038.

This collection of information is required by 37 CFR 1.155. The information is required to obtain or retain a benefit by the public which is to file (and by the USPTO to process) an application. Confidentiality is governed by 35 U.S.C. 122 and 37 CFR 1.11 and 1.14. This collection is estimated to take 6 minutes to complete, including gathering, preparing, and submitting the completed application form to the USPTO. Time will vary depending upon the individual case. Any comments on the amount of time you require to complete this form and/or suggestions for reducing this burden, should be sent to the Chief Information Officer, U.S. Patent and Trademark Office, U.S. Department of Commerce, P.O. Box 1450, Alexandria, VA 22313-1450. DO NOT SEND FEES OR COMPLETED FORMS TO THIS ADDRESS. SEND TO: Commissioner for Patents, P.O. Box 1450, Alexandria, VA 22313-1450.

If you need assistance in completing the form, call 1-800-PTO-9199 and select option 2.

UNITED STATES PATENT AND TRADEMARK OFFICE

Commissioner for Patents
United States Patent and Trademark Office
P.O. Box 1450
Alexandria, VA 22313-1450
www.uspto.gov

EGBERT LAW OFFICES
412 MAIN STREET, 7TH FLOOR
HOUSTON, TX 77002

COPY MAILED

AUG 27 2008

OFFICE OF PETITIONS

In re Application of :
Kuei-chih Hsu :
Application No. 29/250,888 : ON PETITION
Filed: December 4, 2006 :
Attorney Docket No. 1980-41 :

This is a decision on the petition under 37 CFR 1.137(b), filed on March 11, 2008, to revive the above-identified application.

The application became abandoned for failure to timely respond to the Notice of Allowance and Fee(s) Due mailed September 6, 2007. A Notice of Abandonment was mailed on January 9, 2008.

The petition satisfies the requirements of 37 CFR 1.137(b) in that petitioner has supplied (1) the reply in the form of $410 for payment of the issue fee, a Terminal Disclaimer with the $65 fee and nine (9) sheets of replacement drawings containing Figures 1-9; (2) the petition fee of $770; and (3) a proper statement of unintentional delay. Therefore, the petition is **GRANTED**.

The terminal disclaimer filed under 37 CFR 1.137(d) on March 11, 2008 is accepted and made of record. Any continuing application filed from this application must contain a copy of the terminal disclaimer. The copy of the terminal disclaimer must be filed with a cover letter requesting the terminal disclaimer be recorded on the continuing application. A copy of this decision should be attached to the cover letter.

This application file is being referred to the Office of Data Management to be processed into a patent.

Telephone inquiries concerning this decision should be directed to the undersigned at (571) 272-3226.

Andrea Smith
Petitions Examiner
Office of Petitions

UNITED STATES PATENT AND TRADEMARK OFFICE

Commissioner for Patents
United States Patent and Trademark Office
P.O. Box 1450
Alexandria, VA 22313-1450
www.uspto.gov

VARNUM, RIDDERING, SCHMIDT & HOWLETT LLP
333 BRIDGE STREET, NW
P.O. BOX 352
GRAND RAPIDS, MI 49501-0352

MAILED

SEP 30 2009

OFFICE OF PETITIONS

In re Application of :
Blair W. WIELAND :
Application No. 29/250,908 :
Filed: December 5, 2006 :
Attorney Docket No. **SAUDER P2US1-DES** :

DECISION ON PETITION
UNDER 37 CFR 1.137(b)

This is a decision on the petition under the unintentional provisions of 37 CFR 1.137(b), filed September 4, 2009, to revive the above-identified application.

The petition is **GRANTED**.

This application became abandoned for failure to submit corrected drawings on or before March 18, 2008, as required by the Notice of Allowance/Allowability mailed December 18, 2007. Accordingly, the date of abandonment of this application is March 19, 2008.

The petition satisfies the requirements of 37 CFR 1.137(b) in that petitioner has supplied (1) the reply in the form payment of the issue fee of $820, a terminal disclaimer and fee of $140, (2) the petition fee of $1620; and (3) an adequate statement of unintentional delay.

The terminal disclaimer filed September 4, 2009 has been entered and made of record. Any continuing application filed from this application must contain a copy of the terminal disclaimer. The copy of the terminal disclaimer must be filed with a cover letter requesting the terminal disclaimer be recorded on the continuing application. A copy of this decision should be attached to the cover letter.

Telephone inquiries concerning this decision should be directed to Monica A. Graves at (571) 272-7253.

This application is being referred to the Office of Data Management for processing into a patent.

Brian W. Brown
Petitions Examiner
Office of Petitions

UNITED STATES PATENT AND TRADEMARK OFFICE

Commissioner for Patents
United States Patent and Trademark Office
P.O. Box 1450
Alexandria, VA 22313-1450
www.uspto.gov

THE WALT DISNEY COMPANY
C/O GREENBERG TRAURIG LLP
2450 COLORADO AVENUE SUITE 400E
SANTA MONICA CA 90404

COPY MAILED

JUL 3 1 2008

OFFICE OF PETITIONS

In re Application of	:	
Ng et al.	:	
Application No. 29/250949	:	
Filing or 371(c) Date: 12/06/2006	:	
Attorney Docket Number:	:	
54317-036901	:	ON PETITION

This is a decision on the "Petition for Revival of an Application for Patent Abandoned Unavoidably Under 37 CFR 1.137(a)", filed December 18, 2007. The petition is properly treated as a petition to withdraw holding of abandonment based upon nonreceipt of an Office action under 37 C.F.R. § 1.181 (No Fee Required). The delay in treating this petition is regretted.

This Petition is hereby **granted**.

The above-identified application became abandoned for failure to timely and properly reply to the Notice of Allowance and Issue Fee Due, mailed July 31, 2007. The Notice set a non-extendable three (3) month period for reply. No response having been received, the application became abandoned on November 1, 2007. A Notice of Abandonment was mailed November 28, 2007.

With the present petition, Applicant has demonstrated non-receipt of the Notice by a preponderance of the evidence[1].

In view of the foregoing, the holding of abandonment is hereby withdrawn.

The petition fee has been refunded to Applicant's deposit account as authorized in the present petition.

The application will be referred to the Office of Data Management ("ODM") for processing into a patent.

[1] Office records reveal that Applicant's Customer Number was incorrectly entered by this Office and that the Notices of Allowance and Issue Fee Due and of Allowability were mailed to an incorrect correspondence address. Office records have been corrected to reflect the proper Customer Number.

Telephone inquiries concerning this Decision only should be directed to the undersigned at (571) 272-3232.

/Derek L. Woods/
Derek L. Woods
Attorney
Office of Petitions

UNITED STATES PATENT AND TRADEMARK OFFICE

Commissioner for Patents
United States Patent and Trademark Office
P.O. Box 1450
Alexandria, VA 22313-1450
www.uspto.gov

STEVE M. CLEMMONS
33150 SCHOOLCRAFT, SUITE 207
LIVONIA, MI 48150

COPY MAILED

DEC 17 2007

OFFICE OF PETITIONS

In re Application of :
Atika McBarnett et al :
Application No. 29/250,956 : ON PETITION
Filed: December 7, 2006 :
Attorney Docket No. JJE-121-A-DESIGN :

This is a decision on the petition, filed August 31, 2007 under 37 CFR 1.137(b) to revive the above-identified application.

The petition is **DISMISSED.**

Any request for reconsideration of this decision must be submitted within TWO (2) MONTHS from the mail date of this decision. Extensions of time under 37 CFR 1.136(a) are permitted. The reconsideration request should include a cover letter entitled "**Renewed Petition under 37 CFR 1.137(b)**." This is **not** final agency action within the meaning of 5 U.S.C. § 704.

The above-identified application became abandoned for failure to submit the formal drawings in a timely manner in reply to the Notice of Allowance mailed April 4, 2007, which set a statutory period for reply of three (3) months. Accordingly, the above-identified application became abandoned on July 5, 2007.

A grantable petition under 37 CFR 1.137(b) must be accompanied by: (1) the required reply, unless previously filed; (2) the petition fee as set forth in 37 CFR 1.17(m); (3) a statement that the entire delay in filing the required reply from the due date for the reply until the filing of a grantable petition pursuant to 37 CFR 1.137(b) was unintentional; and (4) any terminal disclaimer (and fee as set forth in 37 CFR 1.20(d)) required by 37 CFR 1.137(c). Where there is a question as to whether either the abandonment or the delay in filing a petition under 37 CFR 1.137 was unintentional, the Commissioner may require additional information. See MPEP 711.03(c)(III)(C) and (D). The instant petition lack(s) item(s) (4).

The petition does not satisfies the conditions for revival pursuant to the provisions of 37 CFR 1.137(b) in that (4) the terminal disclaimer was not received. Accordingly, this petition can not be revive until the terminal disclaimer is received.

Further correspondence with respect to this matter should be addressed as follows:

By mail: Mail Stop PETITION
Commissioner for Patents
Post Office Box 1450
Alexandria, VA 22313-1450

By hand: Customer Service Window
Randolph Building
401 Dulany Street
Alexandria, VA 22314

By facsimile: (571) 273-8300
ATTN: Office of Petitions

Telephone inquiries concerning this decision should be directed to the undersigned at (571) 272-3210.

Irvin Dingle
Petitions Examiner
Office of Petitions

UNITED STATES PATENT AND TRADEMARK OFFICE

Commissioner for Patents
United States Patent and Trademark Office
P.O. Box 1450
Alexandria, VA 22313-1450
www.uspto.gov

STEVE M. CLEMMONS
33150 SCHOOLCRAFT, SUITE 207
LIVONIA, MI 48150

COPY MAILED

MAR 13 2008

OFFICE OF PETITIONS

In re Application of :
Atika McBarnett et al :
Application No. 29/250,956 :
Filed: December 7, 2006 :
Attorney Docket No. JJE-121-A-DESIGN :

ON PETITION

This is a decision on the renewed petition under 37 CFR 1.137(b), filed December 19, 2007, to revive the above-identified application.

The petition is **GRANTED**.

Telephone inquiries concerning this decision should be directed to Irvin Dingle at (571) 272-3210.

This matter is being referred to Technology Center AU 2911 for further processing.

Irvin Dingle
Petitions Examiner
Office of Petitions

UNITED STATES PATENT AND TRADEMARK OFFICE

Commissioner for Patents
United States Patent and Trademark Office
P.O. Box 1450
Alexandria, VA 22313-1450
www.uspto.gov

CHRISTINA EZELL
PO BOX 50475
NASHVILLE, TN 37205

COPY MAILED

FEB 28 2008

OFFICE OF PETITIONS

In re Application of	:	
Oxford et al.	:	
Application No. 29/251,038	:	DECISION ON PETITION
Filed: January 3, 2006	:	
Attorney Docket No. 612.44	:	

This is a decision on the petition under 37 C.F.R. § 1.137(b), filed January 25, 2008, to revive the above-identified application.

The petition is **DISMISSED**.

Any request for reconsideration must be submitted within TWO (2) MONTHS from the mail date of this decision. No further petition fee is required for the request. Extensions of time under 37 CFR 1.136(a) are permitted. The reconsideration request should include a cover letter entitled "Renewed Petition under 37 CFR 1.137(b)." This is **not** a final agency action within the meaning of 5 U.S.C. § 704.

The above-identified application became abandoned for failure to submit the issue fee in a timely manner in reply to the Notice of Allowance mailed September 4, 2007, which set a statutory period for reply of three (3) months. Accordingly, the above-identified application became abandoned on December 5, 2007. A Notice of Abandonment was mailed on January 8, 2008.

A grantable petition under 37 CFR 1.137(b) must be accompanied by:
(1) the required reply,[1]
(2) the petition fee,
(3) a statement that the entire delay in filing the required reply from the due date for the reply until the filing of a grantable petition pursuant to 37 CFR 1.137(b) was unintentional, and
(4) a terminal disclaimer and fee if the application was filed on or before June 8, 1995 or if the application is a design application.

Where there is a question as to whether either the abandonment or the delay in filing a petition under 37 CFR 1.137 was unintentional, the Commissioner may require additional information.[2]

The instant petition lacks item(s) (4) as listed above. Since the instant application is a design application, a terminal disclaimer with the requisite fee is required for revival under 37 CFR 1.137(b). A blank terminal disclaimer form is enclosed for petitioner's convenience.

---

[1] In a nonprovisional application abandoned for failure to prosecute, the required reply may be met by the filing of a continuing application. In an application or patent, abandoned or lapsed for failure to pay the issue fee or any portion thereof, the required reply must be the payment of the issue fee or any outstanding balance thereof.

[2] See MPEP 711.03(c)(III)(C) and (D).

Further, petitioner submitted payment of the $565.00 small-entity plant issue fee, rather than the $410.00 small-entity design issue fee. Accordingly, the difference of $155.00 will be refunded to petitioner's credit card.

There is no indication that the person signing the instant petition was ever given a power of attorney or authorization of agent to prosecute the above-identified application. If the person signing the instant petition desires to receive future correspondence regarding this application, the appropriate power of attorney or authorization of agent must be submitted. While a courtesy copy of this decision is being mailed to the person signing the instant petition, all future correspondence will be directed solely to the address currently of record until such time as appropriate instructions are received to the contrary.

It is not apparent whether the statement of unintentional delay was signed by a person who would have been in a position of knowing that the entire delay in filing the required reply from the due date for the reply until the filing of a grantable petition pursuant to 37 CFR 1.137(b) was unintentional. Nevertheless, in accordance with 37 CFR 10.18, the statement is accepted as constituting a certification of unintentional delay. However, in the event that petitioner has no knowledge that the delay was unintentional, petitioner must make such an inquiry to ascertain that, in fact, the delay was unintentional. If petitioner discovers that the delay was intentional, petitioner must notify the Office.

Further correspondence with respect to this matter should be addressed as follows:

By mail: Mail Stop PETITIONS
Commissioner for Patents
Post Office Box 1450
Alexandria, VA 22313-1450

By hand: Customer Window located at:

U.S. Patent and Trademark Office
Customer Service Window Randolph Building
401 Dulany Street
Alexandria, VA 22314

By fax: (571) 273-8300
ATTN: Office of Petitions

Any questions concerning this matter may be directed to the undersigned at (571) 272-3206.

Liana Walsh
Petitions Examiner
Office of Petitions

cc:

W. EDWARD RAMAGE
211 COMMERCE STREET, SUITE 1000
NASHVILLE, TN 37201

UNITED STATES PATENT AND TRADEMARK OFFICE

Commissioner for Patents
United States Patent and Trademark Office
P.O. Box 1450
Alexandria, VA 22313-1450
www.uspto.gov

W. EDWARD RAMAGE
COMMERCE CENTER SUITE 1000
211 COMMERCE ST
NASHVILLE TN 37201

COPY MAILED

APR 1 0 2008

OFFICE OF PETITIONS

In re Application of	:	
Oxford et al.	:	
Application No. 29/251,038	:	DECISION ON PETITION
Filed: January 3, 2006	:	
Title: SPHERICALLY HOUSED LOUDSPEAKER	:	

This is a decision on the renewed petition under the unintentional provisions of 37 CFR 1.137(b), filed March 11, 2008, to revive the above-identified application.

The petition is **GRANTED**.

Petitioner has now submitted the requisite terminal disclaimer and fee.

It is not apparent whether the statement of unintentional delay was signed by a person who would have been in a position of knowing that the entire delay in filing the required reply from the due date for the reply until the filing of a grantable petition pursuant to 37 CFR 1.137(b) was unintentional, as Power of Attorney was only recently obtained. Nevertheless, in accordance with 37 CFR 10.18, the statement is accepted as constituting a certification of unintentional delay. However, in the event that petitioner has no knowledge that the delay was unintentional, petitioner must make such an inquiry to ascertain that, in fact, the delay was unintentional. If petitioner discovers that the delay was intentional, petitioner must notify the Office.

Telephone inquiries concerning this decision should be directed to the undersigned at (571) 272-3206.

This matter is being referred to the Office of Data Management for processing into a patent.

Liana Walsh
Petitions Examiner
Office of Petitions

PTO/SB/27 (09-04)
Approved for use through 07/31/2006. OMB 0651-0031
U.S. Patent and Trademark Office; U.S DEPARTMENT OF COMMERCE
Under the Paperwork Reduction ACT of 1995, no persons are required to respond to collection of information unless it displays a valid OMB control number.

REQUEST FOR EXPEDITED EXAMINATION OF A DESIGN APPLICATION (37 CFR 1.155)

Application Number	29/251,148
Filing Date	January 4, 2006
First Named Inventor	Higuel Flores
Title	Light Globe
Atty Docket Number	31175330-1575

ADDRESS TO:

MAIL STOP EXPEDITED DESIGN
COMMISSIONER FOR PATENTS
P.O. Box 1450
Alexandria, VA 22313-1450

Approved 8-4-06
Jacqueline M. Stone
Jacqueline M. Stone, Director
Technology Center 1700/2900

This is a request for expedited examination of a design application under 37 CFR 1.155.

NOTE: If the Request made by this form accompanies original application papers, include form PTO/SB/18 "Design Patent Application Transmittal" or its equivalent.

A preexamination search was conducted. The field of search was:

D26/130

D26/134

Related applications: 29/251,194; 29/251,124; 29/251,121; 29/251,120

If not previously filed for the above-identified application, the following items required by 37 CFR 1.155 are enclosed:

- Formal drawings (see 37 CFR 1.84).
- The fee set forth in 37 CFR 1.17(k).
- An information disclosure statement in compliance with 37 CFR 1.98.

Lisa H. Meyerhoff
Signature

June 15, 2006
Date

LisahH. Meyerhoff
Typed or printed name

36,869
Registration Number, if applicable

713-427-5005
Telephone Number

WARNING: Information on this form may become public. Credit card information should not be included on this form. Provide credit card information and authorization on PTO-2038.

This collection of information is required by 37 CFR 1.155. The information is required to obtain or retain a benefit by the public which is to file (and by the USPTO to process) an application. Confidentiality is governed by 35 U.S.C. 122 and 37 CFR 1.11 and 1.14. This collection is estimated to take 6 minutes to complete, including gathering, preparing, and submitting the completed application form to the USPTO. Time will vary depending upon the individual case. Any comments on the amount of time you require to complete this form and/or suggestions for reducing this burden, should be sent to the Chief Information Officer, U.S. Patent and Trademark Office, U.S. Department of Commerce, P.O. Box 1450, Alexandria, VA 22313-1450. DO NOT SEND FEES OR COMPLETED FORMS TO THIS ADDRESS. SEND TO: Commissioner for Patents, P.O. Box 1450, Alexandria, VA 22313-1450.

If you need assistance in completing the form, call 1-800-PTO-9199 and select option 2.

UNITED STATES PATENT AND TRADEMARK OFFICE

Commissioner for Patents
United States Patent and Trademark Office
P.O. Box 1450
Alexandria, VA 22313-1450
www.uspto.gov

BRUCE E. LILLING
LILLING & LILLING PLLC
P.O. BOX 560
GOLDEN BRIDGE, NY 10526

COPY MAILED
JUL 18 2007
OFFICE OF PETITIONS

In re Application of	:	
Yau Hon Chan	:	
Application No. 29/251,155	:	ON PETITION
Filed: January 4, 2006	:	
Attorney Docket No. 307/1	:	

This is a decision on the petition filed February 12, 2007 under 37 CFR 1.137(b), to revive the above-identified application.

The petition is **GRANTED.**

The above-identified application became abandoned for failure to submit the Issue fee in a timely manner in reply to the Notice of Allowance mailed October 10, 2006, which set a statutory period for reply of three (3) months. Accordingly, the above-identified application became abandoned on January 11, 2007.

The petition satisfies the conditions for revival pursuant to the provisions of 37 CFR 1.137(b) in that (1) the reply in the form of payment of the Issue fee; (2) the petition fee; (3) the required statement of unintentional delay; and (4) terminal disclaimer have been received. Accordingly, the issue fee is accepted as having been unintentionally delayed.

Telephone inquiries concerning this decision should be directed to the undersigned at (571) 272-3210.

This matter is being referred to the Publishing Division for further processing.

Irvin Dingle
Petitions Examiner
Office of Petitions

UNITED STATES PATENT AND TRADEMARK OFFICE

Commissioner for Patents
United States Patent and Trademark Office
P.O. Box 1450
Alexandria, VA 22313-1450
www.uspto.gov

PATTERSON, THUENTE, SKAAR & CHRISTENSEN, P.A.
4800 IDS CENTER
80 SOUTH 8TH STREET
MINNEAPOLIS MN 55402-2100

COPY MAILED

DEC 13 2007

OFFICE OF PETITIONS

In re Application of :
Jim Wohlford et al :
Application No. 29/251,158 : DECISION ON PETITION
Filed: January 4, 2006 :
Attorney Docket No. 3156.63US01 :

This is a decision on the petition under 37 CFR 1.137(b), filed June 19, 2007, which, for the reasons stated below, is being treated as a petition under 37 CFR 1.181(a) (no fee), requesting withdrawal of the holding of abandonment in the above-identified application.

The petition is **GRANTED**.

This application was held abandoned for failure to timely respond to the non-Office action of October 6, 2006, which set a three (3) month shortened statutory period for reply. A reply was due on or before January 8, 2007 (January 6, 2007, the due date, was a Saturday).

Petitioner states that a reply was in fact timely filed via certificate of mailing on January 8, 2007. However, the first page of the response erroneously identified Application No. 29/251,159, rather than the application number for the present application. As a consequence, the papers intended for this file were placed in the file wrapper of Application No. 29/251,159. A copy of the previously filed papers accompanies the petition.

A review of the file record discloses that the papers intended for this application were indeed placed in the file wrapper of Application No. 29/251,159. As noted by petitioner, the first page of the response identified Application No. 29/251,159 rather than this application; however, it is noted that the subsequent pages of the response did correctly identify this application. It is further noted that the application number was also incorrectly identified on the drawings.

Under current Office procedure, a response that has an incorrect application number is handled in accordance with MPEP 508.03. If a paper having an incorrect application number contains sufficient information to identify the correct application and was timely filed, the holding of abandonment will be withdrawn. In reviewing the papers submitted, it is concluded that the information contained thereon was sufficient to associate the papers with the instant file.

In view of the above, the Notice of Abandonment mailed on May 15, 2007 is hereby **vacated** and the holding of abandonment is hereby **withdrawn.**

A copy of the reply erroneously filed in Application No. 29/251,159 has been placed of record in this file.

In view of the treatment of the petition under 37 CFR 1.137(b) as a petition under 37 CFR 1.181(a), no fee is required. Accordingly, the $750 petition fee submitted will be refunded to petitioner's deposit account in due course.

This application is being referred to Technology Center AU 2913 for appropriate action in the normal course of business on the reply received via certificate of mailing on January 10, 2007.

Frances Hicks

Frances Hicks
Petitions Examiner
Office of Petitions

UNITED STATES PATENT AND TRADEMARK OFFICE

Commissioner for Patents
United States Patent and Trademark Office
P.O. Box 1450
Alexandria, VA 22313-1450
www.uspto.gov

THE WEBB LAW FIRM, P.C.
700 KOPPERS BUILDING
436 SEVENTH AVENUE
PITTSBURGH PA 15219

MAILED

MAR 04 2009

OFFICE OF PETITIONS

In re Patent No.D539600 :
Issue Date: 3 April, 2007 :
Application No. 29/251,206 : ON PETITION
Filed: 5 January, 2006 :
Attorney Docket No. 5363-063656 :

This is a decision on the petition filed on 16 August, 2007, under 37 C.F.R. §3.81(b) to correct, *inter alia*, the name of the assignee—also the name of Counsel--on the front page of the above-identified patent by way of a certificate of correction under 37 C.F.R. §1.323.

The request is **GRANTED** upon the instant showing of the recordation of the assignment(s) on 18 January, 2007, and the location of recordation as Reel/Frame 018772/0082 (and again on 25 January, 2007).

Petitioner requests issuance of a certificate of correction the identification of the Assignee(s) to "**SEB S.A., Rumilly (France)** and **Groupe SEB USA, West Orange, NJ (US)**" of the substance and in the form of that submitted therewith.

The Certificates of Correction Branch will be notified of this decision granting the petition under 37 C.F.R. §3.81(b) and directing issuance of the requested Certificate of Correction.

Inquiries regarding the issuance of a certificate of correction should be directed to the Certificate of Correction Branch at (571) 272-4200.

While telephone inquiries regarding this decision may be directed to the undersigned at (571) 272-3214, it is noted that all practice before the Office is in writing (see: 37 C.F.R. §1.2[1]) and the proper authority for action on any matter in this regard are the statutes (35 U.S.C.), regulations (37 C.F.R.) and the commentary on policy (MPEP). Therefore, no telephone discussion may be controlling or considered authority for Petitioner's action(s).

/ John J. Gillon, Jr./
John J. Gillon, Jr.
Senior Attorney
Office of Petitions

---

[1] The regulations at 37 C.F.R. §1.2 provide:

§1.2 Business to be transacted in writing.

All business with the Patent and Trademark Office should be transacted in writing.The personal attendance of applicants or their attorneys or agents at the Patent and Trademark Office is unnecessary. The action of the Patent and Trademark Office will be based exclusively on the written record in the Office. No attention will be paid to any alleged oral promise, stipulation,or understanding in relation to which there is disagreement or doubt.

UNITED STATES PATENT AND TRADEMARK OFFICE

Commissioner for Patents
United States Patent and Trademark Office
P.O. Box 1450
Alexandria, VA 22313-1450
www.uspto.gov

FISH & RICHARDSON PC
P. O. BOX 1022
MINNEAPOLIS, MN 55440-1022

COPY MAILED
MAY 17 2007
OFFICE OF PETITIONS

In re Application of	:
Richard J. Carbone et al	: DECISION GRANTING PETITION
Application No. 29/251,219	: UNDER 37 CFR 1.313(c)(3)
Filed: January 4, 2006	:
Attorney Docket No.	:
754001/AAB0SP028	

This is a decision on the petition under 37 CFR 1.313(c)(3), filed May 16, 2007 to withdraw the above-identified application from issue after payment of the issue fee.

The petition is **GRANTED**.

The above-identified application is hereby withdrawn from issue in favor of a continued prosecution application (CPA) under 37 CFR 1.53(d).

Petitioner is advised that the issue fee paid on March 6, 2007 in the parent application is not refundable nor can it be applied towards any new Notice of Allowance which may issue on the CPA filed May 16, 2007.

Telephone inquiries should be directed to the undersigned at (571) 272-3218.

This matter is being referred to Technology Center AU 2912 for processing of the CPA and consideration of the Information Disclosure Statement.

Frances Hicks
Petitions Examiner
Office of Petitions

UNITED STATES PATENT AND TRADEMARK OFFICE

Commissioner for Patents
United States Patent and Trademark Office
P.O. Box 1450
Alexandria, VA 22313-1450
www.uspto.gov

COPY MAILED

MAY 24 2007

OFFICE OF PETITIONS

FISH & RICHARDSON PC
P.O. BOX 1022
MINNEAPOLIS, MN 55440-1022

In re Application of	:
Richard J. Carbone et al	: DECISION GRANTING PETITION
Application No. 29/251,220	: UNDER 37 CFR 1.313(c)(3) (CPA)
Filed: January 4, 2006	:
Attorney Docket No. 02103-752001AABOSP026	:

This is a decision on the petition under 37 CFR 1.313(c)(3), filed May 22, 2007, to withdraw the above-identified application from issue after payment of the issue fee.

The petition is **GRANTED**.

The above-identified application is hereby withdrawn from issue in favor of a continued prosecution application (CPA) under 37 CFR 1.53(d).

Petitioner is advised that the issue fee paid on February 14, 2007 in the parent application is not refundable nor can it be applied towards any new Notice of Allowance, which may issue on the CPA filed May 22, 2007.

Telephone inquiries should be directed to Irvin Dingle at (571) 272-3210.

This matter is being referred to Technology Center AU 2912 for processing of the CPA and consideration of the concurrently filed Information Disclosure Statement.

Irvin Dingle
Petition Examiner
Office of Petitions

FISH & RICHARDSON P.C.

225 Franklin Street
Boston, Massachusetts
02110-2804

Telephone
617 542-5070

Facsimile
617 542-8906

Web Site
www.fr.com

Date May 23, 2007

To Mr. Dingle
United States Patent and Trademark Office
Office of Petitions
Telephone: (571) 272-3210

Facsimile number 02103-75200001 / (571) 273-0025

From Brooke Benjamin

Re AABOSP026--LOUDSPEAKER DESIGN
Our Ref.: 02103-752001

FAX RECEIVED
MAY 23 2007
OFFICE OF PETITIONS

Number of pages including this page 10

Message On behalf of David Feigenbaum, please find attached the petition to withdraw filed on 5/22/2007 including all enclosures. Should you need further assistance please call me at 617-521-7068. Thank you.

NOTE: This facsimile is intended for the addressee only and may contain privileged or confidential information. If you have received this facsimile in error, please immediately call us collect at 617 542-5070 to arrange for its return. Thank you.

Electronic Acknowledgement Receipt

EFS ID:	1801403
Application Number:	29251220
International Application Number:	
Confirmation Number:	2019
Title of Invention:	LOUDSPEAKER
First Named Inventor/Applicant Name:	Richard J. Carbone
Customer Number:	26162
Filer:	David L Feigenbaum/Brooke Benjamin
Filer Authorized By:	David L Feigenbaum
Attorney Docket Number:	02103-752001/AABOSP026
Receipt Date:	22-MAY-2007
Filing Date:	04-JAN-2006
Time Stamp:	18:30:20
Application Type:	Design

FAX RECEIVED
MAY 23 2007
OFFICE OF PETITIONS

Payment information:

Submitted with Payment	yes
Payment was successfully received in RAM	$330
RAM confirmation Number	18278
Deposit Account	061050
The Director of the USPTO is hereby authorized to charge indicated fees and credit any overpayment as follows: Charge any Additional Fees required under 37 C.F.R. Section 1.16 and 1.17	

File Listing:

Document Number	Document Description	File Name	File Size(Bytes)	Multi Part /.zip	Pages (if appl.)
1		752pet.pdf	1027988	yes	7

Multipart Description/PDF files in .zip description

Document Description	Start	End
Petition to Withdraw from Issue	1	1
Transmittal of New Application	2	3
Information Disclosure Statement (IDS) Filed	4	5
NPL Documents	6	7

Warnings:

Information:

2	Foreign Reference	JP1223308D.pdf	836261	no	4

Warnings:

Information:

3	Foreign Reference	JP1224149D.pdf	1195362	no	5

Warnings:

Information:

4	Foreign Reference	TW398815.pdf	164201	no	6

Warnings:

Information:

5	Foreign Reference	TW321493.pdf	301828	no	5

Warnings:

Information:

6	Fee Worksheet (PTO-06)	fee-info.pdf	8285	no	2

Warnings:

Information:

Total Files Size (in bytes):	3533925

FAX RECEIVED

MAY 23 2007

OFFICE OF PETITIONS

This Acknowledgement Receipt evidences receipt on the noted date by the USPTO of the indicated documents, characterized by the applicant, and including page counts, where applicable. It serves as evidence of receipt similar to a Post Card, as described in MPEP 503.

New Applications Under 35 U.S.C. 111
If a new application is being filed and the application includes the necessary components for a filing date (see 37 CFR 1.53(b)-(d) and MPEP 506), a Filing Receipt (37 CFR 1.54) will be issued in due course and the date shown on this Acknowledgement Receipt will establish the filing date of the application.

National Stage of an International Application under 35 U.S.C. 371
If a timely submission to enter the national stage of an international application is compliant with the conditions of 35 U.S.C. 371 and other applicable requirements a Form PCT/DO/EO/903 indicating acceptance of the application as a national stage submission under 35 U.S.C. 371 will be issued in addition to the Filing Receipt, in due course.

New International Application Filed with the USPTO as a Receiving Office
If a new international application is being filed and the international application includes the necessary components for an international filing date (see PCT Article 11 and MPEP 1810), a Notification of the International Application Number and of the International Filing Date (Form PCT/RO/105) will be issued in due course, subject to prescriptions concerning national security, and the date shown on this Acknowledgement Receipt will establish the international filing date of the application.

FAX RECEIVED

MAY 23 2007

OFFICE OF PETITIONS

Attorney's Docket No.: 02103-752001 / AABOSP026

IN THE UNITED STATES PATENT AND TRADEMARK OFFICE

Applicant : Richard J. Carbone, et al.
Serial No. : 29/251,220
Filed : January 4, 2006
Title : LOUDSPEAKER DESIGN

Art Unit : 2912
Examiner : Nanda Bondade
Conf. No. : 2019

Commissioner for Patents
P.O. Box 1450
Alexandria, VA 22313-1450

PETITION TO WITHDRAW FROM ISSUE

Application owner hereby petitions under §1.313(c)(3) for the withdrawal of this application from issue to permit consideration of an information disclosure statement filed in a continuing application. The issue fee was paid on February 14, 2007.

A request for a continuation under 37 C.F.R § 1.53(d) is being filed simultaneously herewith.

Please apply any charges or credits to deposit account 06-1050, order 02103-752001.

Respectfully submitted,

Date: 5/22/7

David L. Feigenbaum
Reg. No. 30,378
Attorney for Application Owner

PTO No: 26162

21643648.doc

FISH & RICHARDSON P.C.

STREET ADDRESS
225 FRANKLIN STREET
BOSTON, MASSACHUSETTS
02110-2804

MAIL ADDRESS
P.O. BOX 1022
MINNEAPOLIS, MINNESOTA
55440-1022

TELEPHONE
617 542-5070

FACSIMILE
877 769-7945

WEB SITE
WWW.FR.COM

Frederick P. Fish
1855-1930

W.K. Richardson
1859-1951

VIA EFS

May 22, 2007

FAX RECEIVED

MAY 23 2007

OFFICE OF PETITIONS

Attorney Docket No.: 02103-752001/AABOSP026

Commissioner for Patents
P.O. Box 1450
Alexandria, VA 22313-1450

This paper is a request for a continuation under 37 C.F.R § 1.53(d) of:

Applicant: RICHARD J. CARBONE, AARON D. SZYMANSKI, MICHAEL B. MENNONE AND KARL W. VANDERBEEK
Title: LOUDSPEAKER DESIGN

FR

ATLANTA
AUSTIN
BOSTON
DALLAS
DELAWARE
NEW YORK
SAN DIEGO
SILICON VALLEY
TWIN CITIES
WASHINGTON, DC

Prior U.S. application no: 29/251,220
Filing Date: January 4, 2006

The prior application was complete as defined by 37 CFR §1.51(b), or was a national stage of an international application filed in compliance with 35 USC §371.

This request for a CPA is the reference to the prior application noted above as required by 35 U.S.C. § 120. Kindly abandon the prior application in favor of the continued proceedings that are requested herein.

The prior application is assigned of record to Bose Corporation, a Delaware corporation, by virtue of an assignment submitted to the Patent and Trademark Office and recorded on March 31, 2006 at reel 01742 frame 0354.

Enclosures:

— New disclosure information, including:
Information disclosure statement, 1 page.
PTO-1449, 1 page.
References, 4 items.

The entire disclosure of the prior application is part of this application and is incorporated by reference.

Basic filing fee	$200
Total claims in excess of 20 times $50	$0
Independent claims in excess of 3 times $200	$0
Fee for multiple dependent claims	$0
Total filing fee:	$200

FISH & RICHARDSON P.C.

Commissioner for Patents
May 22, 2007
Page 2

FAX RECEIVED
MAY 23 2007
OFFICE OF PETITIONS

Please apply the filing fee and any other required fees or any credits to deposit account 06-1050, referencing the attorney docket number shown above. .

If this application is found to be incomplete, or if a telephone conference would otherwise be helpful, please call the undersigned at (617) 542-5070.

Please direct all correspondence to the following:

26162
PTO Customer Number

Respectfully submitted,

David L. Feigenbaum
Reg. No. 30,378
Enclosures
DLF/byb
21643655.doc

Attorney's Docket No.: 02103-752001 / AABOSP026

IN THE UNITED STATES PATENT AND TRADEMARK OFFICE

Applicant : Richard J. Carbone, et al.
Serial No. : 29/251,220
Filed : January 4, 2006
Title : LOUDSPEAKER DESIGN

Art Unit : 2912
Examiner : Nanda Bondade
Conf. No. : 2019

FAX RECEIVED
MAY 23 2007
OFFICE OF PETITIONS

MAIL STOP RCE
Commissioner for Patents
P.O. Box 1450
Alexandria, VA 22313-1450

INFORMATION DISCLOSURE STATEMENT

Please consider the references listed on the attached PTO-1449 form.

Copies of United States patent documents will be provided upon request. Copies of all non-U.S. patent documents and other documents are enclosed. A copy of a communication from a foreign patent office in a counterpart application is also enclosed.

This filing is being made with the filing of a request for a continuation under 37 CFR §1.53(d). No fee is required. Please apply any charges or credits to deposit account 06-1050, order 02103-752001.

Respectfully submitted,

Date: 5/22/7

David L. Feigenbaum
Reg. No. 30,378
Attorney for Application Owner

PTO No: 26162

21643660.doc

Sheet 1 of 1

Substitute Form PTO-1449 (Modified) U.S. Department of Commerce Patent and Trademark Office	Attorney's Docket No. 02103-752001	Application No. 29/251,220
Information Disclosure Statement by Applicant (Use several sheets if necessary)	Applicant Richard J. Carbone, et al.	
(37 CFR §1.98(b))	Filing Date January 4, 2006	Group Art Unit 2912

FAX RECEIVED MAY 23 2007 OFFICE OF PETITIONS

U.S. Patent Documents

Examiner Initial	Desig. ID	Document Number	Publication Date	Patentee	Class	Subclass	Filing Date If Appropriate
	AA						
	AB						
	AC						
	AD						
	AE						
	AF						
	AG						
	AH						
	AI						
	AJ						
	AK						

Foreign Patent Documents or Published Foreign Patent Applications

Examiner Initial	Desig. ID	Document Number	Publication Date	Country or Patent Office	Class	Subclass	Translation Yes	Translation No
	AL	TW321493	11/21/1997	Taiwan				
	AM	TW398815	07/11/2000	Taiwan				
	AN	JPD1224149	11/29/2004	Japan				
	AO	JPD1223308	11/22/2004	Japan				
	AP							

Other Documents (Include Author, Title, Date, and Place of Publication)

Examiner Initial	Desig. ID	Document
	AQ	
	AR	
	AS	
	AT	

Examiner Signature	Date Considered

EXAMINER: Initials citation considered. Draw line through citation if not in conformance and not considered. Include copy of this form with next communication to applicant.

Substitute Disclosure Form (PTO-1449)

理建法律事務所
LEE AND LI
ATTORNEYS-AT-LAW

SEARCH REPORT FOR NEW DESIGN PATNT APPLICATION

ROC (Taiwan) New Design Patent Application No. 095303629

(Translation)

FAX RECEIVED
MAY 23 2007
OFFICE OF PETITIONS

1. Filing Date: 29 June 2006	
2. Priority Date: 4 January 2006	
3. International Classification for Industrial Designs (LOC. 8): 14-01 L0233-02-05	
4. Scope of Search on ROC (Taiwan) Patent Cases (Class or Keyword): 14-01 L0233-02-05	
5. Scope of Search on Foreign Patent Cases (Country and Class or Keyword): US:D14/215 ; JP:H4-131	
6. Others:	
Relevance Code	Cited Prior Art Reference(s)
A	1. TW 321493
A	2. TW 398815
A	3. JP D1224149
A	4. JP D1223308

Explanation of Relevance Codes:

X: particularly relevant prior art reference(s), if taken alone, that can negate the novelty or creativeness of the claimed design

Y: particularly relevant prior art reference(s), if combined with one or more other documents, that can negate the creativeness of the claimed design

A: prior art reference(s) related to general state of art

D: prior art reference(s) disclosed in the specification

E: ROC (Taiwan) design patent that is filed earlier but is published later than the examined patent application

O: prior art reference(s) related to public use or selling or display at a trade exhibition

P: prior art reference(s) that has (have) been publicly disclosed during the time period between the priority date and the filing date of the examined patent application

L: prior art reference(s) that is (are) cited for other reason(s).

Date of Completion: 17 April 2007

附件

新式樣第 95303629 號專利申請案檢索報告

1.申請日：95年6月28日
2.優先權日：2006年1月4日
3.本案國際工業設計分類號（LOC.8）：14-01 L0233-02-05
4.檢索國內專利（分類號或關鍵詞）範圍：14-01 L0233-02-05
5.檢索國外專利（國別及分類號或關鍵詞）範圍：US:D14/215；JP:H4-131
6.其他：

關聯性代碼	引用文獻資料
A	1. TW 321403
A	2. TW 398815
A	3. JP D1224149
A	4. JP D1223308

關聯性代碼說明

X：單獨引用即足以否定新式樣新穎性或創作性之特別相關的文獻。
Y：結合一或多篇其他文獻後足以否定新式樣創作性之特別相關的文獻。
A：一般性學水準之參考文獻。
D：國說已揭露之文獻。
E：申請在前公會在後之國內新式樣文獻。
O：公開使用、販賣或展覽陳列之文獻。
P：申請日與優先權日間公開之文獻。
L：其他理由引用之文獻。

完成日：民國 96 年 4 月 17 日

****
*** RX REPORT ***
****

RECEPTION OK

TX/RX NO	6857
RECIPIENT ADDRESS	6175428906
DESTINATION ID	
ST. TIME	05/23 14:12
TIME USE	02'21
PGS.	11
RESULT	OK

SPE RESPONSE FOR CERTIFICATE OF CORRECTION

Paper No.:20080116

DATE : January 16, 2008

TO SPE OF : ART UNIT 2915

SUBJECT : Request for Certificate of Correction on Patent No.:

A response is requested with respect to the accompanying request for a certificate of correction.

Please complete this form and return with file, within **7** days to:
Certificates of Correction Branch - ST (South Tower) 9A22
Palm location **7590** - Tel. No. (703) 305-8309

With respect to the change(s) requested, correcting Office and/or Applicant's errors, should the patent read as shown in the certificate of correction? No new matter should be introduced, nor should the scope or meaning of the claims be changed.

Thank You For Your Assistance **Certificates of Correction Branch**

The request for issuing the above-identified correction(s) is hereby:

Note your decision on the appropriated box.

☒ **Approved** All changes apply.

☐ **Approved in Part** Specify below which changes **do not** apply.

☐ **Denied** State the reasons for denial below.

Comments:

SPE: /Gary D. Watson/ Art Unit 2915

UNITED STATES PATENT AND TRADEMARK OFFICE

Commissioner for Patents
United States Patent and Trademark Office
P.O. Box 1450
Alexandria, VA 22313-1450
www.uspto.gov

FISH & RICHARDSON
P.O. BOX 1022
MINNEAPOLIS MN 55440-1022

COPY MAILED

MAY 24 2007

OFFICE OF PETITIONS

In re Application of :
Richard J. Carbone et al :
Application No. 29/251,274 :
Filed: January 4, 2006 :
Attorney Docket No. 02103-753001/AABOSP027 :

ON PETITION

This is a decision on the petition, filed May 22, 2007, under 37 CFR 1.313(c)(3) to withdraw the above-identified application from issue after payment of the issue fee.

The petition is **GRANTED**.

The above-identified application is withdrawn from issue in favor of a continued prosecution application (CPA) under 37 CFR 1.53(d).

Petitioner is advised that the issue fee paid on March 12, 2007 in the parent application is not refundable nor can it be applied towards any new Notice of Allowance which may issue on the CPA filed May 22, 2007.

Telephone inquiries should be directed to the undersigned at (571) 272-3208.

This matter is being referred to Technology Center AU 2912 for processing of the CPA.

Karen Creasy

Karen Creasy
Petitions Examiner
Office of Petitions

UNITED STATES PATENT AND TRADEMARK OFFICE

Commissioner for Patents
United States Patent and Trademark Office
P.O. Box 1450
Alexandria, VA 22313-1450
www.uspto.gov

FISH & RICHARDSON
P.O. BOX 1022
MINNEAPOLIS MN 55440-1022

COPY MAILED

DEC 0 6 2007

OFFICE OF PETITIONS

In re Application of	:	
Richard J. Carbone et al	:	
Application No. 29/251,274	:	DECISION DISMISSING PETITION
Filed: January 4, 2006	:	UNDER 37 CFR 1.313(a)
Attorney Docket No. 02103-753001/AABOSP027	:	

This is a decision on the petition under 37 CFR 1.313(c)(3), filed December 3, 2007, which, for the reason stated below, is being treated as a petition under 37 CFR 1.313(a) requesting withdrawal of the above-identified application from issue.

The petition is **dismissed** as moot for the reasons stated below.

A review of the file record discloses that a Notice of Allowance and Fee(s) Due was mailed on September 4, 2007, with the issue fee being due on or before December 4, 2007. There is no indication that the issue fee has been paid.

The petition to withdraw from issue is accompanied by the filing of a request under 37 CFR 1.53(d) for a continued prosecution application (CPA) and filing fees therefor, along with an information disclosure statement.

The filing of a petition to withdraw this application from issue under 37 CFR 1.313(a) is unnecessary. In this regard, a continuation or divisional application under 37 CFR 1.53(d) must be filed before the earliest of: (A) **payment of the issue fee on the prior application, unless a petition under 37 CFR 1.313(c) is granted in the prior application**; (B) abandonment of the prior application; or (C) termination of proceedings on the prior application. *Note* MPEP § 201.06(d)(II)(A). Further, the filing of a request for a CPA expressly abandons the prior application as of the filing date of the request for the CPA. *See* 37 CFR 1.53(d)(2)(v). Therefore, as the CPA was filed prior to payment of the issue fee and the filing of the CPA expressly abandons the application as of the filing date thereof, the filing of a petition to withdraw from issue is unnecessary.

In view of the above, the $130 petition fee submitted is unnecessary and will be refunded to petitioner's deposit account in due course. Additionally, since the filing of a request for continued examination (RCE) does not apply to design applications, the RCE fee of $810 submitted on November 30, 2007, will also be refunded.

Inquiries concerning this decision may be directed to the undersigned at (571) 272-3408.

The matter is being referred to Technology Center AU 2912 for appropriate processing of the CPA filed December 3, 2007, and for consideration of the concurrently filed IDS.

Karen Creasy

Karen Creasy
Petitions Examiner
Office of Petitions

UNITED STATES PATENT AND TRADEMARK OFFICE

Commissioner for Patents
United States Patent and Trademark Office
P.O. Box 1450
Alexandria, VA 22313-1450
www.uspto.gov

IPSOLON LLP
111 SW COLUMBIA
SUITE 710
PORTLAND OR 97201

COPY MAILED

FEB 20 2007

OFFICE OF PETITIONS

In re Application of	:	
Donald R. Mayette, et al.	:	
Application No. 29/251,299	:	DECISION ON PETITION
Filed: January 4, 2006	:	
Attorney Docket No. 1006-236/JRD	:	

This is a decision on the petition under the unintentional provisions of 37 CFR 1.137(b), filed September 28, 2006, to revive the above-identified application.

The petition is **GRANTED**.

The application became abandoned for failure to reply in a timely manner to the Notice to File Missing Parts of Nonprovisional Application (Notice), mailed February 6, 2006. The Notice set a period for reply of two (2) months from the mail date of the Notice. No extensions of time under the provisions of 37 CFR 1.136(a) were obtained. Accordingly, the application became abandoned on September 7, 2006.

The petition satisfies the requirements of 37 CFR 1.137(b) in that petitioner has supplied (1) the reply in the form of a reply to the Missing Parts Notice along with surcharge, (2) the petition fee of $1500; and (3) an adequate statement of unintentional delay.

Telephone inquiries concerning this decision should be directed to April Wise at (571) 272-1642.

This application is being referred to the Office of Initial Patent Examination to complete the pre-examination process.

Irvin Dingle
Petitions Examiner
Office of Petitions

SPE: C. BROOKS

SPE RESPONSE FOR CERTIFICATE OF CORRECTION

Paper No.: _____

DATE : 6/23/07

TO SPE OF : ART UNIT 2915

SUBJECT : Request for Certificate of Correction for Appl. No.: 29/251,380 Patent No.: D537603

Please respond to this request for a certificate of correction within 7 days.

Please review the requested changes/corrections as shown in the **COCIN** document(s) in the IFW application image. No new matter should be introduced, nor should the scope or meaning of the claims be changed.

Please complete the response (see below) and forward the completed response to scanning using document code **COCX**.

Lamonte M. Newsome
Certificates of Correction Branch
703-308-9390 ext. 112

Thank You For Your Assistance

The request for issuing the above-identified correction(s) is hereby:

Note your decision on the appropriate box.

- ☑ **Approved** — All changes apply.
- ☐ **Approved in Part** — Specify below which changes **do not** apply.
- ☐ **Denied** — State the reasons for denial below.

Comments: _____

CATHRON C. BROOKS
SUPERVISORY PATENT EXAMINER

SPE _____ Art Unit _____

UNITED STATES PATENT AND TRADEMARK OFFICE

Commissioner for Patents
United States Patent and Trademark Office
P.O. Box 1450
Alexandria, VA 22313-1450
www.uspto.gov

OSTROLENK FABER GERB & SOFFEN
1180 AVENUE OF THE AMERICAS
NEW YORK, NY 10036-8403

COPY MAILED
SEP 19 2006
OFFICE OF PETITIONS

In re Application of	:	
Ignaz Settele	:	
Application No. 29/251,387	:	DECISION GRANTING
Filed: January 6, 2006	:	PETITION
Attorney Docket No. D/2778-77	:	

This is a decision on the request for a corrected filing receipt filed May 1, 2006, which is being treated as a petition requesting that the above-identified application be accorded a filing date of January 6, 2006, rather than the presently accorded date of January 5, 2006.

Petitioner alleges that the application was prepared for Express Mail Service on January 6, 2006. In support, petitioner has submitted a copy of the Pickup Service Statement for Express Mail, Priority Mail or Parcel Post, which shows that Express Mail Label No. EV 343678835 US and other Express Mail packages were picked up and signed by a USPS employee on January 6, 2006. It is also noted that the same Express Mail label number appears on the original transmittal letter for the instant application.

Paragraph (c) of 37 CFR 1.10 (c) states:

> Any person filing correspondence under this section that was received by the Office and delivered by the "Express Mail Post Office to Addressee" service of the USPS, who can show that there is a discrepancy between the filing date accorded by the Office to the correspondence and the date of deposit as shown by the "date-in " on the "Express Mail" mailing label or other official USPS notation, may petition the Director to accord the correspondence a filing date as of the "date-in " on the "Express Mail " mailing label or other official USPS notation, provided that:
>
> (1) The petition is filed promptly after the person becomes aware that the Office has accorded, or will accord, a filing date other than the USPS deposit date;

(2) The number of the "Express Mail " mailing label was placed on the paper(s) or fee(s) that constitute the correspondence prior to the original mailing by "Express Mail"; and

(3) The petition includes a true copy of the "Express Mail " mailing label showing the "date-in", and of any other official notation by the USPS relied upon to show the date of deposit.

The Office considers the date the paper or fee is shown to have been deposited as "Express Mail" to be the "date-in" on the Express Mail label, MPEP 513. However, since the Express Mail label failed to contain a date-in, petitioner must rely on "other official USPS notation" (i.e. the Pickup Service Statement for Express Mail, Priority Mail or Parcel Post dated January 6, 2006) to prove that the package in question was accepted and enroute on January 6, 2006. Also, a search of the USPS Track and Confirm search results prove that Express Mail Label No. EV 343678835 US was accepted and enroute on January 6, 2006.

In view of the above, the evidence is convincing that the application was in the hands of a USPS employee on January 6, 2006; therefore, the petition is **GRANTED**. A corrected filing receipt with the January 6, 2006 filing date accompanies this decision.

This application file is being referred to the Office of Initial Patent Examination (OIPE) **for processing with a filing date of January 6, 2006**.

Telephone inquiries relating to this decision should be directed Andrea Smith at (571) 272-3226. Telephone inquiries related to OIPE processing should be directed to their hotline at (571) 272-4000.

Frances Hicks for
Brian Hearn
Petitions Examiner
Office of Petitions

Attachment: Corrected Filing Receipt

UNITED STATES PATENT AND TRADEMARK OFFICE

UNITED STATES DEPARTMENT OF COMMERCE
United States Patent and Trademark Office
Address: COMMISSIONER FOR PATENTS
P.O. Box 1450
Alexandria, Virginia 22313-1450
www.uspto.gov

APPL NO.	FILING OR 371 (c) DATE	ART UNIT	FIL FEE REC'D	ATTY.DOCKET NO	DRAWINGS	TOT CLMS	IND CLMS
29/251,387	01/06/2006	2913	560	D/2778-77	7	1	1

CONFIRMATION NO. 2811

CORRECTED FILING RECEIPT

OC000000020474166

000002352
OSTROLENK FABER GERB & SOFFEN
1180 AVENUE OF THE AMERICAS
NEW YORK, NY 100368403

Date Mailed: 09/18/2006

Receipt is acknowledged of this regular Patent Application. It will be considered in its order and you will be notified as to the results of the examination. Be sure to provide the U.S. APPLICATION NUMBER, FILING DATE, NAME OF APPLICANT, and TITLE OF INVENTION when inquiring about this application. Fees transmitted by check or draft are subject to collection. Please verify the accuracy of the data presented on this receipt. **If an error is noted on this Filing Receipt, please mail to the Commissioner for Patents P.O. Box 1450 Alexandria Va 22313-1450. Please provide a copy of this Filing Receipt with the changes noted thereon. If you received a "Notice to File Missing Parts" for this application, please submit any corrections to this Filing Receipt with your reply to the Notice. When the USPTO processes the reply to the Notice, the USPTO will generate another Filing Receipt incorporating the requested corrections (if appropriate).**

Applicant(s)

Ignaz Settele, Kaufbeuren, GERMANY;

Power of Attorney: The patent practitioners associated with Customer Number **2352**.

Domestic Priority data as claimed by applicant

Foreign Applications
If Required, Foreign Filing License Granted: 02/07/2006

The country code and number of your priority application, to be used for filing abroad under the Paris Convention, is US29/251,387

Projected Publication Date: None, application is not eligible for pre-grant publication

Non-Publication Request: No

Early Publication Request: No

Title

Splatter shield

Preliminary Class

D07

PROTECTING YOUR INVENTION OUTSIDE THE UNITED STATES

Since the rights granted by a U.S. patent extend only throughout the territory of the United States and have no effect in a foreign country, an inventor who wishes patent protection in another country must apply for a patent in a specific country or in regional patent offices. Applicants may wish to consider the filing of an international application under the Patent Cooperation Treaty (PCT). An international (PCT) application generally has the same effect as a regular national patent application in each PCT-member country. The PCT process **simplifies** the filing of patent applications on the same invention in member countries, but **does not result** in a grant of "an international patent" and does not eliminate the need of applicants to file additional documents and fees in countries where patent protection is desired.

Almost every country has its own patent law, and a person desiring a patent in a particular country must make an application for patent in that country in accordance with its particular laws. Since the laws of many countries differ in various respects from the patent law of the United States, applicants are advised to seek guidance from specific foreign countries to ensure that patent rights are not lost prematurely.

Applicants also are advised that in the case of inventions made in the United States, the Director of the USPTO must issue a license before applicants can apply for a patent in a foreign country. The filing of a U.S. patent application serves as a request for a foreign filing license. The application's filing receipt contains further information and guidance as to the status of applicant's license for foreign filing.

Applicants may wish to consult the USPTO booklet, "General Information Concerning Patents" (specifically, the section entitled "Treaties and Foreign Patents") for more information on timeframes and deadlines for filing foreign patent applications. The guide is available either by contacting the USPTO Contact Center at 800-786-9199, or it can be viewed on the USPTO website at http://www.uspto.gov/web/offices/pac/doc/general/index.html.

For information on preventing theft of your intellectual property (patents, trademarks and copyrights), you may wish to consult the U.S. Government website, http://www.stopfakes.gov. Part of a Department of Commerce initiative, this website includes self-help "toolkits" giving innovators guidance on how to protect intellectual property in specific countries such as China, Korea and Mexico. For questions regarding patent enforcement issues, applicants may call the U.S. Government hotline at 1-866-999-HALT (1-866-999-4158).

LICENSE FOR FOREIGN FILING UNDER
Title 35, United States Code, Section 184
Title 37, Code of Federal Regulations, 5.11 & 5.15

GRANTED

The applicant has been granted a license under 35 U.S.C. 184, if the phrase "IF REQUIRED, FOREIGN FILING LICENSE GRANTED" followed by a date appears on this form. Such licenses are issued in all applications where the conditions for issuance of a license have been met, regardless of whether or not a license may be required as set forth in 37 CFR 5.15. The scope and limitations of this license are set forth in 37 CFR 5.15(a) unless an earlier license has been issued under 37 CFR 5.15(b). The license is subject to revocation upon written notification. The date indicated is the effective date of the license, unless an earlier license of similar scope has been granted under 37 CFR 5.13 or 5.14.

This license is to be retained by the licensee and may be used at any time on or after the effective date thereof unless it is revoked. This license is automatically transferred to any related applications(s) filed under 37 CFR 1.53(d). This license is not retroactive.

The grant of a license does not in any way lessen the responsibility of a licensee for the security of the subject matter as imposed by any Government contract or the provisions of existing laws relating to espionage and the

national security or the export of technical data. Licensees should apprise themselves of current regulations especially with respect to certain countries, of other agencies, particularly the Office of Defense Trade Controls, Department of State (with respect to Arms, Munitions and Implements of War (22 CFR 121-128)); the Bureau of Industry and Security, Department of Commerce (15 CFR parts 730-774); the Office of Foreign Assets Control, Department of Treasury (31 CFR Parts 500+) and the Department of Energy.

NOT GRANTED

No license under 35 U.S.C. 184 has been granted at this time, if the phrase "IF REQUIRED, FOREIGN FILING LICENSE GRANTED" DOES NOT appear on this form. Applicant may still petition for a license under 37 CFR 5.12, if a license is desired before the expiration of 6 months from the filing date of the application. If 6 months has lapsed from the filing date of this application and the licensee has not received any indication of a secrecy order under 35 U.S.C. 181, the licensee may foreign file the application pursuant to 37 CFR 5.15(b).

UNITED STATES PATENT AND TRADEMARK OFFICE

COMMISSIONER FOR PATENTS
UNITED STATES PATENT AND TRADEMARK OFFICE
P.O. BOX 1450
ALEXANDRIA, VA 22313-1450
www.uspto.gov

DAVID I. ROCHE
BAKER & MCKENZIE LLP
130 EAST RANDOLPH DRIVE
CHICAGO IL 60601

COPY MAILED

APR 14 2008

OFFICE OF PETITIONS

In re Application of
Schnug
Application No. 29/251,389
Filed: January 6, 2006
Attorney Docket No. PRODIR-106-DESIGN-US

ON PETITION

This is a decision on the petition under the unintentional provisions of 37 CFR 1.137(b), filed September 26, 2007, to revive the above-identified application.

The petition is **DISMISSED**.

Any request for reconsideration of this decision must be submitted within TWO (2) MONTHS from the mail date of this decision. Extensions of time under 37 CFR 1.136(a) are permitted. The reconsideration request should include a cover letter entitled "Renewed Petition under 37 CFR 1.137(b)." This is **not** a final agency action within the meaning of 5 U.S.C. § 704.

The application became abandoned July 7, 2007 for failure to timely submit corrected formal drawings, as required by the Notice of Allowability mailed April 6, 2007.The Notice set a three month statutory period of time for reply. Notice of Abandonment was mailed August 3, 2007.

A grantable petition under 37 CFR 1.137(b) must be accompanied by: (1) the required reply, unless previously filed; (2) the petition fee as set forth in 37 CFR 1.17(m); (3) a statement that the entire delay in filing the required reply from the due date for the reply until the filing of a grantable petition pursuant to 37 CFR 1.137(b) was unintentional; and (4) any terminal disclaimer (and fee as set forth in 37 CFR 1.20(d)) required by 37 CFR 1.137(d). Where there is a question as to whether either the abandonment or the delay in filing a petition under 37 CFR 1.137 was unintentional, the Director may require additional information. See MPEP 711.03(c)(II)(C) and (D).

The instant petition fails to satisfy requirement (4) set forth above. *See*, 37 CFR 1.137(d). Any renewed petition must be accompanied by the required terminal disclaimer (including fee).

Further correspondence with respect to this matter should be addressed as follows:

By Mail: Mail Stop PETITION
Commissioner for Patents
P. O. Box 1450
Alexandria, VA 22313-1450

By hand: U. S. Patent and Trademark Office
Customer Service Window, Mail Stop Petitions
Randolph Building
401 Dulany Street
Alexandria, VA 22314

The centralized facsimile number is **(571) 273-8300.**

Telephone inquiries concerning this decision should be directed to the undersigned at (571) 272-3205.

Alesia M. Brown
Petitions Attorney
Office of Petitions

UNITED STATES PATENT AND TRADEMARK OFFICE

COMMISSIONER FOR PATENTS
UNITED STATES PATENT AND TRADEMARK OFFICE
P.O. BOX 1450
ALEXANDRIA, VA 22313-1450
www.uspto.gov

DAVID I. ROCHE
BAKER & MCKENZIE LLP
130 EAST RANDOLPH DRIVE
CHICAGO IL 60601

COPY MAILED

DEC 0 8 2008

OFFICE OF PETITIONS

In re Application of	:	
Schnug	:	
Application No. 29/251,389	:	ON PETITION
Filed: January 6, 2006	:	
Attorney Docket No. PRODIR-106-DESIGN-US	:	

This is a decision on the renewed petition under the unintentional provisions of 37 CFR 1.137(b), filed May 21, 2008, to revive the above-identified application.

The petition is **GRANTED**.

The application became abandoned July 7, 2007 for failure to timely submit corrected formal drawings, as required by the Notice of Allowability mailed April 6, 2007.The Notice set a three month statutory period of time for reply. Notice of Abandonment was mailed August 3, 2007. A petition under 37 CFR 1.137(b) was filed September 26, 2007 and dismissed April 14, 2008.

A grantable petition under 37 CFR 1.137(b) must be accompanied by: (1) the required reply, unless previously filed; (2) the petition fee as set forth in 37 CFR 1.17(m); (3) a statement that the entire delay in filing the required reply from the due date for the reply until the filing of a grantable petition pursuant to 37 CFR 1.137(b) was unintentional; and (4) any terminal disclaimer (and fee as set forth in 37 CFR 1.20(d)) required by 37 CFR 1.137(d). Where there is a question as to whether either the abandonment or the delay in filing a petition under 37 CFR 1.137 was unintentional, the Director may require additional information. See MPEP 711.03(c)(II)(C) and (D).

The instant application has been carefully reviewed and found in compliance with the requirements set forth above.

This application is being forwarded to the Office of Data Divisions for further processing.

Telephone inquiries concerning this decision should be directed to the undersigned at (571) 272-3205.

Alesia M. Brown
Petitions Attorney
Office of Petitions

UNITED STATES PATENT AND TRADEMARK OFFICE

COMMISSIONER FOR PATENTS
UNITED STATES PATENT AND TRADEMARK OFFICE
P.O. BOX 1450
ALEXANDRIA, VA 22313-1450
www.uspto.gov

COPY MAILED

DEC 1 0 2007

OFFICE OF PETITIONS

IRVING KESCHNER
21535 HAWTHORNE BOULEVARD
SUITE 385
TORRANCE, CA 90503

In re Application of
Dong Kim, et al.
Application No. 29/251,528
Filed: January 9, 2006
Attorney Docket No. DSS05-0284-USO

ON PETITION

This is a decision in response to the petition, filed August 13, 2007, to revive the above-identified application under the provisions of 37 CFR 1.137(b).

The petition is **GRANTED**.

The application became abandoned for a failure to reply in a timely manner to a non-final Office action mailed October 6, 2006. A Notice of Abandonment was mailed on May 9, 2007. In response, on August 13, 2007, the present petition was filed.

The petition satisfies the conditions for revival pursuant to the provisions of 37 CFR 1.137(b) in that petitioner has supplied (1) the reply in the form of an amendment; (2) the petition fee of $1,500; (3) an adequate statement of unintentional delay; and (4) a terminal disclaimer and fee as required by 37 CFR 1.137(d).

The terminal disclaimer is accepted and has been made of record. Any continuing application filed from this application must contain a copy of the terminal disclaimer. The copy of the terminal disclaimer must be filed with a cover letter requesting the terminal disclaimer be recorded on the continuing application. A copy of this decision should be attached to the cover letter.

The application is being referred to Technology Center AU 2912 for consideration of the amendment filed August 13, 2007.

Telephone inquiries concerning this decision should be directed to the undersigned at (571) 272-3204. Inquiries relating to further prosecution should be directed to the Technology Center.

Sherry D. Brinkley
Petitions Examiner
Office of Petitions

PTO/SB/27 (09-04)
Approved for use through 07/31/2006. OMB 0651-0031
U.S. Patent and Trademark Office; U.S DEPARTMENT OF COMMERCE
Under the Paperwork Reduction ACT of 1995, no persons are required to respond to collection of information unless it displays a valid OMB control number.

REQUEST FOR EXPEDITED EXAMINATION OF A DESIGN APPLICATION (37 CFR 1.155)

Application Number	To be assigned
Filing Date	To be assigned
First Named Inventor	E. Scott Morris
Title	PORTION OF A SHOE UPPER
Attorney Docket Number	2465-7474US

ADDRESS TO:
MAIL STOP EXPEDITED DESIGN
COMMISSION FOR PATENTS
P.O. BOX 1450
Alexandria, VA 22313-1450

Approved 2-1-06
Jacqueline M. Stone
Jacqueline M. Stone, Director
Technology Center 1700

113000 U.S. PTO
29/251541
011006

This is a request for expedited examination of a design application under 37 CER 1.155.

NOTE: If the Request made by this form accompanies original application papers, include form PTO/SB/18 "Design Patent Application Transmittal" or its equivalent.

A preexamination search was conducted. The field of search was:

US. CL. D2/896, D2/897, D2/902, D2/907, D2/908, D2/910 D2/911, D2/912, D2/916, D2/922, D2/935, D2/969, D2/970, D2/971, D2/972, 36/45, 36/50.1, 36/83, 36/88, 36/89, 36/93, 36/101, 36/102, 36/103, 36/104, 36/106, 36/108, 36/109, 36/113, 36/114, 36/115, 36/116, 36/126, 36/127, 36/128, 36/129, 36/130

Related applications: _____

If not previously filed for the above-identified application, the following items required by 37 CFR 1.155 are enclosed:

- Formal drawings (see 37 CFR 1.84).
- The fee set forth in 37 CFR 1.17(k).
- An information disclosure statement in compliance with 37 CFR 1.98.

Signature	30 Dec. 2005 Date
Laurence B. Bond Typed or printed name	30,549 Registration Number, if applicable
(801) 532-1922 Telephone Number	

WARNING: Information on this form may become public. Credit card information should not be included on this form. Provide credit card information and authorization on PTO-2038.

This collection of information is required by37 CFR 1.155. The information is required to obtain or retain a benefit by the public which is to file (and by the USPTO to process) an application. Confidentiality is governed by 35 U.S.C. 122 and 37 CFR 1.11 and 1.14. This collection is estimated to take 6 minutes to complete, including gathering, preparing, and submitting the completed application form to the USPTO. Time will vary depending upon the individual case. Any comments on the amount of time you require to complete this form and/or suggestions for reducing this burden, should be sent to the Chief Information Officer, U.S. Patent and Trademark Office, U.S. Department of Commerce, P.O. Box 1450, Alexandria, VA 22313-1450. DO NOT SEND FEES OR COMPLETED FORMS TO THIS ADDRESS. SEND TO: Commissioner for Patents, P.O. Box 1450, Alexandria, VA 22343-1450.
If you need assistance in completing the form, call 1-800-PTO-9199 and select option 2.

PTO/SB/27 (09-04)
Approved for use through 07/31/2006. OMB 0651-0031
U.S. Patent and Trademark Office; U.S DEPARTMENT OF COMMERCE
Under the Paperwork Reduction ACT of 1995, no persons are required to respond to collection of information unless it displays a valid OMB control number.

REQUEST FOR EXPEDITED EXAMINATION OF A DESIGN APPLICATION (37 CFR 1.155)

Application Number	To be assigned
Filing Date	To be assigned
First Named Inventor	Alexander Gajowskyj
Title	PORTION OF A SHOE UPPER
Attorney Docket Number	2465-7471US

ADDRESS TO:
MAIL STOP EXPEDITED DESIGN
COMMISSION FOR PATENTS
P.O. BOX 1450
Alexandria, VA 22313-1450

Approved 1-25-06
Jacqueline M. Stone
Jacqueline M. Stone, Director
Technology Center 1700

113006 U.S. PTO
29/251542
010906

This is a request for expedited examination of a design application under 37 CER 1.155.

NOTE: If the Request made by this form accompanies original application papers, include form PTO/SB/18 "Design Patent Application Transmittal" or its equivalent.

A preexamination search was conducted. The field of search was:

US. CL. D2/896, D2/897, D2/902, D2/907, D2/908, D2/910 D2/911, D2/912, D2/916, D2/922, D2/935, D2/969, D2/970, D2/971, D2/972, 36/45, 36/50.1, 36/83, 36/88, 36/89, 36/93, 36/101, 36/102, 36/103, 36/104, 36/106, 36/108, 36/109, 36/113, 36/114, 36/115, 36/116, 36/126, 36/127, 36/128, 36/129, 36/130

Related applications: _____

If not previously filed for the above-identified application, the following items required by 37 CFR 1.155 are enclosed:

- Formal drawings (see 37 CFR 1.84).
- The fee set forth in 37 CFR 1.17(k).
- An information disclosure statement in compliance with 37 CFR 1.98.

Signature	January 9, 2006 Date
Laurence B. Bond Typed or printed name	30,549 Registration Number, if applicable
(801) 532-1922 Telephone Number	

WARNING: Information on this form may become public. Credit card information should not be included on this form. Provide credit card information and authorization on PTO-2038.

This collection of information is required by37 CFR 1.155. The information is required to obtain or retain a benefit by the public which is to file (and by the USPTO to process) an application. Confidentiality is governed by 35 U.S.C. 122 and 37 CFR 1.11 and 1.14. This collection is estimated to take 6 minutes to complete, including gathering, preparing, and submitting the completed application form to the USPTO. Time will vary depending upon the individual case. Any comments on the amount of time you require to complete this form and/or suggestions for reducing this burden, should be sent to the Chief Information Officer, U.S. Patent and Trademark Office, U.S. Department of Commerce, P.O. Box 1450, Alexandria, VA 22313-1450. DO NOT SEND FEES OR COMPLETED FORMS TO THIS ADDRESS. SEND TO: Commissioner for Patents, P.O. Box 1450, Alexandria, VA 22343-1450.
If you need assistance in completing the form, call 1-800-PTO-9199 and select option 2.

01/12/2006 SSITHIB1 00000097 29251542
04 FC:1802 900.00 OP

UNITED STATES PATENT AND TRADEMARK OFFICE

Commissioner for Patents
United States Patent and Trademark Office
P.O. Box 1450
Alexandria, VA 22313-1450
www.uspto.gov

ANTOINETTE M. TEASE
P. O. BOX 51016
BILLINGS MT 59105

COPY MAILED

DEC 11 2007

OFFICE OF PETITIONS

In re Application of	:	
Daniel D. Wipf et al.	:	
Application No. 29/251,570	:	ON PETITION
Filed: January 10, 2006	:	
Attorney Docket No.WIP06-0001	:	

This is a decision on the petition under 37 CFR 1.137(b), filed October 26, 2007, to revive the above-identified application.

The petition is **DISMISSED**.

Any request for reconsideration of this decision must be submitted within TWO (2) MONTHS from the mail date of this decision. Extensions of time under 37 CFR 1.136(a) are permitted. The reconsideration request should include a cover letter entitled "Renewed Petition under 37 CFR 1.137(b)." This is **not** a final agency action within the meaning of 5 U.S.C. § 704.

The above-identified application became abandoned for failure to submit corrected drawings in a timely manner in reply to the Notice of Allowance/Allowability mailed June 15, 2007 which set a statutory period for reply of three (3) months. Accordingly, by operation of law, the above-identified application became abandoned on September 16, 2007.

A grantable petition under 37 CFR 1.137(b) must be accompanied by: (1) the required reply, unless previously filed; (2) the petition fee as set forth in 37 CFR 1.17(m); (3) a statement that the entire delay in filing the required reply from the due date for the reply until the filing of a grantable petition pursuant to 37 CFR 1.137(b) was unintentional; and (4) any terminal disclaimer (and fee as set forth in 37 CFR 1.20(d)) required by 37 CFR 1.137(d). Where there is a question as to whether either the abandonment or the delay in filing a petition under 37 CFR 1.137 was unintentional, the Commissioner may require additional information. See MPEP 711.03(c)(II)(C) and (D). The instant petition lacks item(s) (4). Applicants have not filed the required terminal disclaimer.

Application No. 29/251,570

Further correspondence with respect to this matter should be addressed as follows:

By Mail: Mail Stop PETITION
Commissioner for Patents
P. O. Box 1450
Alexandria, VA 22313-1450

By hand: U. S. Patent and Trademark Office
Customer Service Window, Mail Stop Petitions
Randolph Building
401 Dulany Street
Alexandria, VA 22314

The centralized facsimile number is **(571) 273-8300.**

Telephone inquiries concerning this decision should be directed to the Carl Friedman at (571) 272-6842.

David Bucci
Petitions Examiner
Office of Petitions

UNITED STATES PATENT AND TRADEMARK OFFICE

Commissioner for Patents
United States Patent and Trademark Office
P.O. Box 1450
Alexandria, VA 22313-1450
www.uspto.gov

ANTOINETTE M. TEASE
P. O. BOX 51016
BILLINGS MT 59105

COPY MAILED

APR 2 3 2008

OFFICE OF PETITIONS

In re Application of :
Daniel D. Wipf :
Application No. 29/251,570 : ON PETITION
Filed: January 10, 2006 :
Attorney Docket No. WIP06-0001 :

This is a decision on the renewed petition under 37 CFR 1.137(b), filed February 4, 2008, to revive the above-identified application.

The petition is **GRANTED**.

This application became abandoned for failure to submit corrected drawings in a timely manner in reply to the Notice of Allowance/Allowability mailed June 15, 2007, which set a statutory period for reply of three (3) months. Accordingly, this application became abandoned on Sept 16, 2007.

The petition decision mailed December 11, 2007 indicates the petition under 37 CFR 1.137(b) filed October 26, 2007 was dismissed as failing to provide a terminal disclaimer.

The renewed petition includes two terminal disclaimers from the two assignees.

The renewed petition satisfies the conditions for revival pursuant to the provisions of 37 CFR 1.137(b) in that (1) the reply in the form of corrected drawings; (2) the petition fee of $770; (3) the required statement of unintentional delay; and (4) the terminal disclaimer (and fee as set forth in 37 CFR 1.20(d)) required by 37 CFR 1.137(d) have been received. Accordingly, the filing of corrected drawings is accepted as having been unintentionally delayed.

Telephone inquiries concerning this decision should be directed to Carl Friedman at (571) 272-6842.

The application file is being referred to the Office of Patent Publication.

Christopher Bottiglieri

for David Bucci
Petitions Examiner
Office of Petitions

PTOISB/27 (09-04)
Approved for use through 07/31/2008. OMB 0651-0031
U.S. Patent and Trademark Office; U.S DEPARTMENT OF COMMERCE
Under the Paperwork Reduction ACT of 1995, no persons are required to respond to collection of information unless it displays a valid OMB control number.

REQUEST FOR EXPEDITED EXAMINATION OF A DESIGN APPLICATION (37 CFR 1.155)

Application Number	To be assigned
Filing Date	To be assigned
First Named Inventor	Sebastien Mermet
Title	PORTION OF A SHOE UPPER
Attorney Docket Number	2465-7475US

ADDRESS TO:
MAIL STOP EXPEDITED DESIGN
COMMISSION FOR PATENTS
P.O. BOX 1450
Alexandria, VA 22313-1450

Approved 1-25-06
Jacqueline M. Stone
Jacqueline M. Stone, Director
Technology Center 1700

113006 U.S. PTO
29/251571
011006

This is a request for expedited examination of a design application under 37 CER 1.155.

NOTE: If the Request made by this form accompanies original application papers, include form PTO/SB/18 "Design Patent Application Transmittal" or its equivalent.

A preexamination search was conducted. The field of search was:

US. CL. D2/896, D2/897, D2/902, D2/907, D2/908, D2/910 D2/911, D2/912, D2/916, D2/922, D2/935, D2/969, D2/970, D2/971, D2/972, 36/45, 36/50.1, 36/83, 36/88, 36/89, 36/93, 36/101, 36/102, 36/103, 36/104, 36/106, 36/108, 36/109, 36/113, 36/114, 36/115, 36/116, 36/126, 36/127, 36/128, 36/129, 36/130

Related applications: _____

If not previously filed for the above-identified application, the following items required by 37 CFR 1.155 are enclosed:

- Formal drawings (see 37 CFR 1.84).
- The fee set forth in 37 CFR 1.17(k).
- An information disclosure statement in compliance with 37 CFR 1.98.

Signature	30 Dec. 2005 Date
Laurence B. Bond Typed or printed name	30,549 Registration Number, if applicable
(801) 532-1922 Telephone Number	

WARNING: Information on this form may become public. Credit card information should not be included on this form. Provide credit card information and authorization on PTO-2038.

This collection of information is required by37 CFR 1.155. The information is required to obtain or retain a benefit by the public which is to file (and by the USPTO to process) an application. Confidentiality is governed by 35 U.S.C. 122 and 37 CFR 1.11 and 1.14. This collection is estimated to take 6 minutes to complete, including gathering, preparing, and submitting the completed application form to the USPTO. Time will vary depending upon the individual case. Any comments on the amount of time you require to complete this form and/or suggestions for reducing this burden, should be sent to the Chief Information Officer, U.S. Patent and Trademark Office, U.S. Department of Commerce, P.O. Box 1450, Alexandria, VA 22313-1450. DO NOT SEND FEES OR COMPLETED FORMS TO THIS ADDRESS. SEND TO: Commissioner for Patents, P.O. Box 1450, Alexandria, VA 22343-1450.
If you need assistance in completing the form, call 1-800-PTO-9199 and select option 2.

01/12/2006 SSITHIB1 00000102 29251571
04 FC:1802
900.00 OP

PTOISB/27 (09-04)
Approved for use through 07/31/2006. OMB 0651-0031
U.S. Patent and Trademark Office; U.S DEPARTMENT OF COMMERCE
Under the Paperwork Reduction ACT of 1995, no persons are required to respond to collection of information unless it displays a valid OMB control number.

REQUEST FOR EXPEDITED EXAMINATION OF A DESIGN APPLICATION (37 CFR 1.155)

Application Number	To be assigned
Filing Date	To be assigned
First Named Inventor	Tae Yong Lee
Title	PORTION OF A SHOE UPPER
Attorney Docket Number	2465-7469US

ADDRESS TO:
MAIL STOP EXPEDITED DESIGN
COMMISSION FOR PATENTS
P.O. BOX 1450
Alexandria, VA 22313-1450

Approved 1-25-06
Jacqueline M. Stone
Jacqueline M. Stone, Director
Technology Center 1700

113006 U.S. PTO
29/251572
010906

This is a request for expedited examination of a design application under 37 CER 1.155.

NOTE: If the Request made by this form accompanies original application papers, include form PTO/SB/18 "Design Patent Application Transmittal" or its equivalent.

A preexamination search was conducted. The field of search was:

US. CL. D2/896, D2/897, D2/902, D2/907, D2/908, D2/910 D2/911, D2/912, D2/916, D2/922, D2/935, D2/969, D2/970, D2/971, D2/972, 36/45, 36/50.1, 36/83, 36/88, 36/89, 36/93, 36/101, 36/102, 36/103, 36/104, 36/106, 36/108, 36/109, 36/113, 36/114, 36/115, 36/116, 36/126, 36/127, 36/128, 36/129, 36/130

Related applications: _____

If not previously filed for the above-identified application, the following items required by 37 CFR 1.155 are enclosed:

- Formal drawings (see 37 CFR 1.84).
- The fee set forth in 37 CFR 1.17(k).
- An information disclosure statement in compliance with 37 CFR 1.98.

Signature	30 Dec. 2005 Date
Laurence B. Bond Typed or printed name	30,549 Registration Number, if applicable
(801) 532-1922 Telephone Number	

WARNING: Information on this form may become public. Credit card information should not be included on this form. Provide credit card information and authorization on PTO-2038.

This collection of information is required by37 CFR 1.155. The information is required to obtain or retain a benefit by the public which is to file (and by the USPTO to process) an application. Confidentiality is governed by 35 U.S.C. 122 and 37 CFR 1.11 and 1.14. This collection is estimated to take 6 minutes to complete, including gathering, preparing, and submitting the completed application form to the USPTO. Time will vary depending upon the individual case. Any comments on the amount of time you require to complete this form and/or suggestions for reducing this burden, should be sent to the Chief Information Officer, U.S. Patent and Trademark Office, U.S. Department of Commerce, P.O. Box 1450, Alexandria, VA 22313-1450. DO NOT SEND FEES OR COMPLETED FORMS TO THIS ADDRESS. SEND TO: Commissioner for Patents, P.O. Box 1450, Alexandria, VA 22343-1450.
If you need assistance in completing the form, call 1-800-PTO-9199 and select option 2.

./12/2006 SSITHIB1 00000101 29251572
i FC:1802 900.00 OP

PTO/SB/27 (09-04)
Approved for use through 07/31/2006. OMB 0651-0031
U.S. Patent and Trademark Office; U.S DEPARTMENT OF COMMERCE
Under the Paperwork Reduction ACT of 1995, no persons are required to respond to collection of information unless it displays a valid OMB control number.

REQUEST FOR EXPEDITED EXAMINATION OF A DESIGN APPLICATION (37 CFR 1.155)

Application Number	To be assigned
Filing Date	To be assigned
First Named Inventor	
Title	PORTION OF A SHOE UPPER
Attorney Docket Number	2465-7476US

ADDRESS TO:
MAIL STOP EXPEDITED DESIGN
COMMISSION FOR PATENTS
P.O. BOX 1450
Alexandria, VA 22313-1450

Approved 1-25-06
Jacqueline M. Stone
Jacqueline M. Stone, Director
Technology Center 1700

14-3006 U.S. PTO
29/251573
010906

This is a request for expedited examination of a design application under 37 CER 1.155.

NOTE: If the Request made by this form accompanies original application papers, include form PTO/SB/18 "Design Patent Application Transmittal" or its equivalent.

A preexamination search was conducted. The field of search was:

US. CL. D2/896, D2/897, D2/902, D2/907, D2/908, D2/910 D2/911, D2/912, D2/916, D2/922, D2/935, D2/969, D2/970, D2/971, D2/972, 36/45, 36/50.1, 36/83, 36/88, 36/89, 36/93, 36/101, 36/102, 36/103, 36/104, 36/106, 36/108, 36/109, 36/113, 36/114, 36/115, 36/116, 36/126, 36/127, 36/128, 36/129, 36/130

Related applications: _____

If not previously filed for the above-identified application, the following items required by 37 CFR 1.155 are enclosed:

- Formal drawings (see 37 CFR 1.84).
- The fee set forth in 37 CFR 1.17(k).
- An information disclosure statement in compliance with 37 CFR 1.98.

Signature	30 Dec. 2005 Date
Laurence B. Bond Typed or printed name	30,549 Registration Number, if applicable
(801) 532-1922 Telephone Number	

WARNING: Information on this form may become public. Credit card information should not be included on this form. Provide credit card information and authorization on PTO-2038.

This collection of information is required by37 CFR 1.155. The information is required to obtain or retain a benefit by the public which is to file (and by the USPTO to process) an application. Confidentiality is governed by 35 U.S.C. 122 and 37 CFR 1.11 and 1.14. This collection is estimated to take 6 minutes to complete, including gathering, preparing, and submitting the completed application form to the USPTO. Time will vary depending upon the individual case. Any comments on the amount of time you require to complete this form and/or suggestions for reducing this burden, should be sent to the Chief Information Officer, U.S. Patent and Trademark Office, U.S. Department of Commerce, P.O. Box 1450, Alexandria, VA 22313-1450. DO NOT SEND FEES OR COMPLETED FORMS TO THIS ADDRESS. SEND TO: Commissioner for Patents, P.O. Box 1450, Alexandria, VA 22343-1450.
If you need assistance in completing the form, call 1-800-PTO-9199 and select option 2.

01/12/2006 SSITHIB1 00000100 29251573
04 FC:1802
900.00 OP

PTO/SB/27 (09-04)
Approved for use through 07/31/2006. OMB 0651-0031
U.S. Patent and Trademark Office; U.S DEPARTMENT OF COMMERCE
Under the Paperwork Reduction ACT of 1995, no persons are required to respond to collection of information unless it displays a valid OMB control number.

REQUEST FOR EXPEDITED EXAMINATION OF A DESIGN APPLICATION (37 CFR 1.155)

Application Number	To be assigned
Filing Date	To be assigned
First Named Inventor	E. Scott Morris
Title	PORTION OF A SHOE UPPER
Attorney Docket Number	2465-7474.1US

01/13/2006 U.S. PTO
29/251574

ADDRESS TO:
MAIL STOP EXPEDITED DESIGN
COMMISSION FOR PATENTS
P.O. BOX 1450
Alexandria, VA 22313-1450

Approved
Jacqueline M. Stone 1-25-06
Jacqueline M. Stone, Director
Technology Center 1700

This is a request for expedited examination of a design application under 37 CER 1.155.

NOTE: If the Request made by this form accompanies original application papers, include form PTO/SB/18 "Design Patent Application Transmittal" or its equivalent.

A preexamination search was conducted. The field of search was:

US. CL. D2/896, D2/897, D2/902, D2/907, D2/908, D2/910 D2/911, D2/912, D2/916, D2/922, D2/935, D2/969, D2/970, D2/971, D2/972, 36/45, 36/50.1, 36/83, 36/88, 36/89, 36/93, 36/101, 36/102, 36/103, 36/104, 36/106, 36/108, 36/109, 36/113, 36/114, 36/115, 36/116, 36/126, 36/127, 36/128, 36/129, 36/130

Related applications: _____

If not previously filed for the above-identified application, the following items required by 37 CFR 1.155 are enclosed:

- Formal drawings (see 37 CFR 1.84).
- The fee set forth in 37 CFR 1.17(k).
- An information disclosure statement in compliance with 37 CFR 1.98.

Signature	30 Dec. 2005 Date
Laurence B. Bond Typed or printed name	30,549 Registration Number, if applicable
(801) 532-1922 Telephone Number	

WARNING: Information on this form may become public. Credit card information should not be included on this form. Provide credit card information and authorization on PTO-2038.

This collection of information is required by37 CFR 1.155. The information is required to obtain or retain a benefit by the public which is to file (and by the USPTO to process) an application. Confidentiality is governed by 35 U.S.C. 122 and 37 CFR 1.11 and 1.14. This collection is estimated to take 6 minutes to complete, including gathering, preparing, and submitting the completed application form to the USPTO. Time will vary depending upon the individual case. Any comments on the amount of time you require to complete this form and/or suggestions for reducing this burden, should be sent to the Chief Information Officer, U.S. Patent and Trademark Office, U.S. Department of Commerce, P.O. Box 1450, Alexandria, VA 22313-1450. DO NOT SEND FEES OR COMPLETED FORMS TO THIS ADDRESS. SEND TO: Commissioner for Patents, P.O. Box 1450, Alexandria, VA 22343-1450.
If you need assistance in completing the form, call 1-800-PTO-9199 and select option 2.

01/12/2006 SSITHIB1 00000099 29251574
04 FC:1802
900.00 OP

UNITED STATES PATENT AND TRADEMARK OFFICE

UNITED STATES DEPARTMENT OF COMMERCE
United States Patent and Trademark Office
Address: COMMISSIONER FOR PATENTS
P.O. Box 1450
Alexandria, Virginia 22313-1450
www.uspto.gov

APPL NO.	FILING OR 371 (c) DATE	ART UNIT	FIL FEE REC'D	ATTY.DOCKET NO	DRAWINGS	TOT CLMS	IND CLMS
29/251,585	01/06/2006	2913	560	CCK-0243DP	4	1	1

CONFIRMATION NO. 5809

UPDATED FILING RECEIPT

OC000000018162653

21302
KNOBLE, YOSHIDA & DUNLEAVY
EIGHT PENN CENTER
SUITE 1350, 1628 JOHN F KENNEDY BLVD
PHILADELPHIA, PA 19103

Date Mailed: 03/01/2006

Receipt is acknowledged of this regular Patent Application. It will be considered in its order and you will be notified as to the results of the examination. Be sure to provide the U.S. APPLICATION NUMBER, FILING DATE, NAME OF APPLICANT, and TITLE OF INVENTION when inquiring about this application. Fees transmitted by check or draft are subject to collection. Please verify the accuracy of the data presented on this receipt. **If an error is noted on this Filing Receipt, please mail to the Commissioner for Patents P.O. Box 1450 Alexandria Va 22313-1450. Please provide a copy of this Filing Receipt with the changes noted thereon. If you received a "Notice to File Missing Parts" for this application, please submit any corrections to this Filing Receipt with your reply to the Notice. When the USPTO processes the reply to the Notice, the USPTO will generate another Filing Receipt incorporating the requested corrections (if appropriate).**

Applicant(s)

Bruce Munn, Wantage, UNITED KINGDOM;

Power of Attorney:

Kevin Dunleavy--32024
John Knoble--32387
Kenichiro Yoshida--37009

Domestic Priority data as claimed by applicant

Foreign Applications

If Required, Foreign Filing License Granted: 02/02/2006

The country code and number of your priority application, to be used for filing abroad under the Paris Convention, is US29/251,585

Projected Publication Date: None, application is not eligible for pre-grant publication

Non-Publication Request: No

Early Publication Request: No

Title

Metal can

Preliminary Class

D09

PROTECTING YOUR INVENTION OUTSIDE THE UNITED STATES

Since the rights granted by a U.S. patent extend only throughout the territory of the United States and have no effect in a foreign country, an inventor who wishes patent protection in another country must apply for a patent in a specific country or in regional patent offices. Applicants may wish to consider the filing of an international application under the Patent Cooperation Treaty (PCT). An international (PCT) application generally has the same effect as a regular national patent application in each PCT-member country. The PCT process **simplifies** the filing of patent applications on the same invention in member countries, but **does not result** in a grant of "an international patent" and does not eliminate the need of applicants to file additional documents and fees in countries where patent protection is desired.

Almost every country has its own patent law, and a person desiring a patent in a particular country must make an application for patent in that country in accordance with its particular laws. Since the laws of many countries differ in various respects from the patent law of the United States, applicants are advised to seek guidance from specific foreign countries to ensure that patent rights are not lost prematurely.

Applicants also are advised that in the case of inventions made in the United States, the Director of the USPTO must issue a license before applicants can apply for a patent in a foreign country. The filing of a U.S. patent application serves as a request for a foreign filing license. The application's filing receipt contains further information and guidance as to the status of applicant's license for foreign filing.

Applicants may wish to consult the USPTO booklet, "General Information Concerning Patents" (specifically, the section entitled "Treaties and Foreign Patents") for more information on timeframes and deadlines for filing foreign patent applications. The guide is available either by contacting the USPTO Contact Center at 800-786-9199, or it can be viewed on the USPTO website at http://www.uspto.gov/web/offices/pac/doc/general/index.html.

For information on preventing theft of your intellectual property (patents, trademarks and copyrights), you may wish to consult the U.S. Government website, http://www.stopfakes.gov. Part of a Department of Commerce initiative, this website includes self-help "toolkits" giving innovators guidance on how to protect intellectual property in specific countries such as China, Korea and Mexico. For questions regarding patent enforcement issues, applicants may call the U.S. Government hotline at 1-866-999-HALT (1-866-999-4158).

LICENSE FOR FOREIGN FILING UNDER
Title 35, United States Code, Section 184
Title 37, Code of Federal Regulations, 5.11 & 5.15

GRANTED

The applicant has been granted a license under 35 U.S.C. 184, if the phrase "IF REQUIRED, FOREIGN FILING LICENSE GRANTED" followed by a date appears on this form. Such licenses are issued in all applications where the conditions for issuance of a license have been met, regardless of whether or not a license may be required as set forth in 37 CFR 5.15. The scope and limitations of this license are set forth in 37 CFR 5.15(a) unless an earlier license has been issued under 37 CFR 5.15(b). The license is subject to revocation upon written notification. The date indicated is the effective date of the license, unless an earlier license of similar scope has been granted under 37 CFR 5.13 or 5.14.

This license is to be retained by the licensee and may be used at any time on or after the effective date thereof unless it is revoked. This license is automatically transferred to any related applications(s) filed under 37 CFR 1.53(d). This license is not retroactive.

The grant of a license does not in any way lessen the responsibility of a licensee for the security of the subject matter as imposed by any Government contract or the provisions of existing laws relating to espionage and the national security or the export of technical data. Licensees should apprise themselves of current regulations especially with respect to certain countries, of other agencies, particularly the Office of Defense Trade Controls, Department of State (with respect to Arms, Munitions and Implements of War (22 CFR 121-128)); the Bureau of Industry and Security, Department of Commerce (15 CFR parts 730-774); the Office of Foreign Assets Control, Department of Treasury (31 CFR Parts 500+) and the Department of Energy.

NOT GRANTED

No license under 35 U.S.C. 184 has been granted at this time, if the phrase "IF REQUIRED, FOREIGN FILING LICENSE GRANTED" DOES NOT appear on this form. Applicant may still petition for a license under 37 CFR 5.12, if a license is desired before the expiration of 6 months from the filing date of the application. If 6 months has lapsed from the filing date of this application and the licensee has not received any indication of a secrecy order under 35 U.S.C. 181, the licensee may foreign file the application pursuant to 37 CFR 5.15(b).

UNITED STATES PATENT AND TRADEMARK OFFICE

UNITED STATES DEPARTMENT OF COMMERCE
United States Patent and Trademark Office
Address: COMMISSIONER FOR PATENTS
P.O. Box 1450
Alexandria, Virginia 22313-1450
www.uspto.gov

APPL NO.	FILING OR 371 (c) DATE	ART UNIT	FIL FEE REC'D	ATTY.DOCKET NO	DRAWINGS	TOT CLMS	IND CLMS
29/251,589	01/06/2006	2913	560	CCK-0244DP	4	1	1

CONFIRMATION NO. 5823

UPDATED FILING RECEIPT

OC000000020888423

21302
KNOBLE, YOSHIDA & DUNLEAVY
EIGHT PENN CENTER
SUITE 1350, 1628 JOHN F KENNEDY BLVD
PHILADELPHIA, PA 19103

Date Mailed: 10/18/2006

Receipt is acknowledged of this regular Patent Application. It will be considered in its order and you will be notified as to the results of the examination. Be sure to provide the U.S. APPLICATION NUMBER, FILING DATE, NAME OF APPLICANT, and TITLE OF INVENTION when inquiring about this application. Fees transmitted by check or draft are subject to collection. Please verify the accuracy of the data presented on this receipt. **If an error is noted on this Filing Receipt, please mail to the Commissioner for Patents P.O. Box 1450 Alexandria Va 22313-1450. Please provide a copy of this Filing Receipt with the changes noted thereon. If you received a "Notice to File Missing Parts" for this application, please submit any corrections to this Filing Receipt with your reply to the Notice. When the USPTO processes the reply to the Notice, the USPTO will generate another Filing Receipt incorporating the requested corrections (if appropriate).**

Applicant(s)

Bruce Munn, Wantage, UNITED KINGDOM;

Power of Attorney:

Kevin Dunleavy–32024
John Knoble–32387
Kenichiro Yoshida–37009

Domestic Priority data as claimed by applicant

Foreign Applications

If Required, Foreign Filing License Granted: 02/02/2006

The country code and number of your priority application, to be used for filing abroad under the Paris Convention, is US29/251,589

Projected Publication Date: None, application is not eligible for pre-grant publication

Non-Publication Request: No

Early Publication Request: No

Title

Metal can

Preliminary Class

D09

PROTECTING YOUR INVENTION OUTSIDE THE UNITED STATES

Since the rights granted by a U.S. patent extend only throughout the territory of the United States and have no effect in a foreign country, an inventor who wishes patent protection in another country must apply for a patent in a specific country or in regional patent offices. Applicants may wish to consider the filing of an international application under the Patent Cooperation Treaty (PCT). An international (PCT) application generally has the same effect as a regular national patent application in each PCT-member country. The PCT process **simplifies** the filing of patent applications on the same invention in member countries, but **does not result** in a grant of "an international patent" and does not eliminate the need of applicants to file additional documents and fees in countries where patent protection is desired.

Almost every country has its own patent law, and a person desiring a patent in a particular country must make an application for patent in that country in accordance with its particular laws. Since the laws of many countries differ in various respects from the patent law of the United States, applicants are advised to seek guidance from specific foreign countries to ensure that patent rights are not lost prematurely.

Applicants also are advised that in the case of inventions made in the United States, the Director of the USPTO must issue a license before applicants can apply for a patent in a foreign country. The filing of a U.S. patent application serves as a request for a foreign filing license. The application's filing receipt contains further information and guidance as to the status of applicant's license for foreign filing.

Applicants may wish to consult the USPTO booklet, "General Information Concerning Patents" (specifically, the section entitled "Treaties and Foreign Patents") for more information on timeframes and deadlines for filing foreign patent applications. The guide is available either by contacting the USPTO Contact Center at 800-786-9199, or it can be viewed on the USPTO website at http://www.uspto.gov/web/offices/pac/doc/general/index.html.

For information on preventing theft of your intellectual property (patents, trademarks and copyrights), you may wish to consult the U.S. Government website, http://www.stopfakes.gov. Part of a Department of Commerce initiative, this website includes self-help "toolkits" giving innovators guidance on how to protect intellectual property in specific countries such as China, Korea and Mexico. For questions regarding patent enforcement issues, applicants may call the U.S. Government hotline at 1-866-999-HALT (1-866-999-4158).

LICENSE FOR FOREIGN FILING UNDER
Title 35, United States Code, Section 184
Title 37, Code of Federal Regulations, 5.11 & 5.15

GRANTED

The applicant has been granted a license under 35 U.S.C. 184, if the phrase "IF REQUIRED, FOREIGN FILING LICENSE GRANTED" followed by a date appears on this form. Such licenses are issued in all applications where the conditions for issuance of a license have been met, regardless of whether or not a license may be required as set forth in 37 CFR 5.15. The scope and limitations of this license are set forth in 37 CFR 5.15(a) unless an earlier license has been issued under 37 CFR 5.15(b). The license is subject to revocation upon written notification. The date indicated is the effective date of the license, unless an earlier license of similar scope has been granted under 37 CFR 5.13 or 5.14.

This license is to be retained by the licensee and may be used at any time on or after the effective date thereof unless it is revoked. This license is automatically transferred to any related applications(s) filed under 37 CFR

1.53(d). This license is not retroactive.

The grant of a license does not in any way lessen the responsibility of a licensee for the security of the subject matter as imposed by any Government contract or the provisions of existing laws relating to espionage and the national security or the export of technical data. Licensees should apprise themselves of current regulations especially with respect to certain countries, of other agencies, particularly the Office of Defense Trade Controls, Department of State (with respect to Arms, Munitions and Implements of War (22 CFR 121-128)); the Bureau of Industry and Security, Department of Commerce (15 CFR parts 730-774); the Office of Foreign Assets Control, Department of Treasury (31 CFR Parts 500+) and the Department of Energy.

NOT GRANTED

No license under 35 U.S.C. 184 has been granted at this time, if the phrase "IF REQUIRED, FOREIGN FILING LICENSE GRANTED" DOES NOT appear on this form. Applicant may still petition for a license under 37 CFR 5.12, if a license is desired before the expiration of 6 months from the filing date of the application. If 6 months has lapsed from the filing date of this application and the licensee has not received any indication of a secrecy order under 35 U.S.C. 181, the licensee may foreign file the application pursuant to 37 CFR 5.15(b).

PTO/SB/27 (09-04)
Approved for use through 07/31/2006. OMB 0651-0031
U.S. Patent and Trademark Office; U.S DEPARTMENT OF COMMERCE
Under the Paperwork Reduction ACT of 1995, no persons are required to respond to collection of information unless it displays a valid OMB control number.

REQUEST FOR EXPEDITED EXAMINATION OF A DESIGN APPLICATION (37 CFR 1.155)

Application Number	To be assigned
Filing Date	To be assigned
First Named Inventor	James Francis Clancy
Title	PORTION OF A SHOE UPPER
Attorney Docket Number	2465-7470US

ADDRESS TO:
MAIL STOP EXPEDITED DESIGN
COMMISSION FOR PATENTS
P.O. BOX 1450
Alexandria, VA 22313-1450

Approved 1-25-06
Jacqueline M. Stone
Jacqueline M. Stone, Director
Technology Center 1700

113006 U.S. PTO
29/251611
010906

This is a request for expedited examination of a design application under 37 CER 1.155.

NOTE: If the Request made by this form accompanies original application papers, include form PTO/SB/18 "Design Patent Application Transmittal" or its equivalent.

A preexamination search was conducted. The field of search was:

US. CL. D2/896, D2/897, D2/902, D2/907, D2/908, D2/910 D2/911, D2/912, D2/916, D2/922, D2/935, D2/969, D2/970, D2/971, D2/972, 36/45, 36/50.1, 36/83, 36/88, 36/89, 36/93, 36/101, 36/102, 36/103, 36/104, 36/106, 36/108, 36/109, 36/113, 36/114, 36/115, 36/116, 36/126, 36/127, 36/128, 36/129, 36/130

Related applications: _____

If not previously filed for the above-identified application, the following items required by 37 CFR 1.155 are enclosed:

- Formal drawings (see 37 CFR 1.84).
- The fee set forth in 37 CFR 1.17(k).
- An information disclosure statement in compliance with 37 CFR 1.98.

Signature	30 Dec 2005 Date
Laurence B. Bond Typed or printed name	30,549 Registration Number, if applicable
(801) 532-1922 Telephone Number	

WARNING: Information on this form may become public. Credit card information should not be included on this form. Provide credit card information and authorization on PTO-2038.

This collection of information is required by37 CFR 1.155. The information is required to obtain or retain a benefit by the public which is to file (and by the USPTO to process) an application. Confidentiality is governed by 35 U.S.C. 122 and 37 CFR 1.11 and 1.14. This collection is estimated to take 6 minutes to complete, including gathering, preparing, and submitting the completed application form to the USPTO. Time will vary depending upon the individual case. Any comments on the amount of time you require to complete this form and/or suggestions for reducing this burden, should be sent to the Chief Information Officer, U.S. Patent and Trademark Office, U.S. Department of Commerce, P.O. Box 1450, Alexandria, VA 22313-1450. DO NOT SEND FEES OR COMPLETED FORMS TO THIS ADDRESS. SEND TO: Commissioner for Patents, P.O. Box 1450, Alexandria, VA 22343-1450.
If you need assistance in completing the form, call 1-800-PTO-9199 and select option 2.

01/12/2006 SSITHIB1 00000113 29251611

01 FC:1802 900.00 OP

UNITED STATES PATENT AND TRADEMARK OFFICE

Commissioner for Patents
United States Patent and Trademark Office
P.O. Box 1450
Alexandria, VA 22313-1450
www.uspto.gov

JOHN W. JORDAN IV
MATIS BAUM RIZZA O'CONNOR
FOUR GATEWAY CENTER
444 LIBERTY AVE., SUITE 300
PITTSBURGH, PA 15222

COPY MAILED

JUN 19 2008

OFFICE OF PETITIONS

In re Application of	:	
Steven I. ISZAUK	:	
Application No. 29/251,665	:	DECISION ON PETITION
Filed: January 11, 2006	:	
Attorney Docket No. 440.28203	:	

This is a decision on the petition under the unintentional provisions of 37 CFR 1.137(b), filed February 15, 2008, to revive the above-identified application.

The petition is **GRANTED**.

The application became abandoned for failure to timely pay the issue fee on or before January 18, 2008. As required by the Notice of Allowance and Fee(s) Due, mailed October 18, 2007, which set a statutory period for reply of three (3) months. Accordingly, the application became abandoned on January 19, 2008.

The petition satisfies the requirements of 37 CFR 1.137(b) in that petitioner has supplied (1) the reply in the form of payment of the Issue Fee of $410; (2) the petition fee of $770; (3) an adequate statement of unintentional delay; and (4) a Terminal Disclaimer.

Telephone inquiries concerning this decision should be directed to Diane Goodwyn at (571) 272-6735.

This application is being referred to Technology Center AU 2914 for appropriate action by the Examiner in the normal course of business on the reply received February 15, 2008.

Thurman Page
Petitions Examiner
Office of Petitions

UNITED STATES PATENT AND TRADEMARK OFFICE

Commissioner for Patents
United States Patent and Trademark Office
P.O. Box 1450
Alexandria, VA 22313-1450
www.uspto.gov

LEMPIA BRAIDWOOD LLC
223 W. JACKSON BLVD.
SUITE 620
CHICAGO, IL 60606

COPY MAILED

JAN 17 2008

OFFICE OF PETITIONS

In re Application of

Lawler, et al.

Application No. 29/251,669

Filed: January 11, 2006

Attorney Docket No. 10040-03 PEL 04C

DECISION ON PETITION

This is a decision on the petition under 37 CFR 1.181(a) to withdraw the holding of abandonment, filed October 12, 2007.

The petition under 37 CFR 1.181(a) to withdraw the holding of abandonment is **granted**.

This application was held abandoned on November 26, 2006, after it was believed that no response was received to the non-final Office action mailed August 25, 2006. The non-final Office action allowed a shortened statutory period for reply of three months from its mailing date. Extensions of the time set for reply were available pursuant to 37 CFR 1.136(a). A Notice of Abandonment was mailed on March 12, 2007, indicating that a reply to the non-final Office action was not received.

The instant petition maintains that an amendment responsive to the non-final Office action was timely mailed and received by the Office. A review of the application file revealed that an amendment responsive to the non-final Office action filed on February 28, 2007, with a request for an extension of time within the third month[1]. It appears that the application was improperly held abandoned as a response to the non-final Office action was filed prior to expiration of the shortened statutory period for reply. The holding of abandonment is withdrawn, accordingly.

The application file is being forwarded Technology Center 2900, GAU 2915, for further processing.

Telephone inquires regarding this decision may be directed to the undersigned at (571) 272-3222.

Kenya A. McLaughlin
Petitions Attorney
Office of Petitions

[1] The amendment contained a certificate of mailing dated February 26, 2007, and February 25, 2007, fell on a Sunday.

UNITED STATES PATENT AND TRADEMARK OFFICE

Commissioner for Patents
United States Patent and Trademark Office
P.O. Box 1450
Alexandria, VA 22313-1450
www.uspto.gov

LEMPIA BRAIDWOOD LLC
223 W. JACKSON BLVD.
SUITE 620
CHICAGO IL 60606

COPY MAILED

JUL 0 8 2008

OFFICE OF PETITIONS

In re Application of	:	
Matthew H. LAWLER et al.	:	
Application No. 29/251,669	:	DECISION ON PETITION
Filed: January 11, 2006	:	
Attorney Docket No. 10040-03 PEL-04C	:	

This is a decision on the petition under the unintentional provisions of 37 CFR 1.137(b), filed May 21, 2008, to revive the above-identified application.

The petition is **GRANTED**.

The application became abandoned for failure to timely pay the issue fee on or before May 12, 2008, as required by the Notice of Allowance and Fee(s) Due, mailed February 12, 2008, which set a statutory period for reply of three (3) months. Accordingly, the application became abandoned on May 13, 2008.

The petition satisfies the requirements of 37 CFR 1.137(b) in that petitioner has supplied (1) the reply in the form of payment of the issue fee of $820.00; (2) the petition fee of $1540.00; (3) a proper statement of unintentional delay and; (4) a terminal disclaimer and fee as required by 37 CFR 1.137(d). Accordingly, the issue fee payment is accepted as being unintentionally delayed.

The terminal disclaimer is accepted and has been made of record.

Telephone inquiries concerning this decision should be directed to Michelle R. Eason at (571) 272-4231.

This application is being referred to Office of Data Management.

Michelle R. Eason

Michelle R. Eason
Paralegal Specialist
Office of Petitions

UNITED STATES PATENT AND TRADEMARK OFFICE

Commissioner for Patents
United States Patent and Trademark Office
P.O. Box 1450
Alexandria, VA 22313-1450
www.uspto.gov

VISTA IP LAW GROUP, LLP
2040 MAIN STREET, 9TH FLOOR
IRVINE, CA 92614

COPY MAILED

MAY 2 7 2008

OFFICE OF PETITIONS

In re Application of :
Thomas Ray SAKAGUCHI :
Application No. 29/251,673 : ON PETITION
Filed: January 10, 2006 :
Attorney Docket No. PEAR-136 :

This is a decision on the petition under the unintentional provisions of 37 CFR 1.137(b), filed February 8, 2008 and supplemented on February 10, 2008.

The petition is **DISMISSED**.

The application became abandoned for failure to timely pay the issue fee on or before January 11, 2008, as required by the Notice of Allowance and Fee(s) Due, mailed October 11, 2007, which set a statutory period for reply of three (3) months. Accordingly, the application became abandoned on January 12, 2008.

A grantable petition under 37 CFR 1.137(b) must be accompanied by: (1) the required reply, unless previously filed; (2) the petition fee as set forth in 37 CFR 1.17(m); (3) a statement that the entire delay in filing the required reply from the due date for the reply until the filing of a grantable petition pursuant to 37 CFR 1.137(b) was unintentional; and (4) any terminal disclaimer (and fee as set forth in 37 CFR 1.20(d)) required by 37 CFR 1.137(d). Where there is a question as to whether either the abandonment or the delay in filing a petition under 37 CFR 1.137 was unintentional, the Director may require additional information. See MPEP 711.03(c)(II)(C) and (D). The instant petition lacks item(s) 4.

A terminal disclaimer and the $130 [$65 if small entity] terminal disclaimer fee is required under 37 CFR 1.137(d) if the application is: (1) a design application, (2) a utility application filed before June 8, 1995, or (3) a plant application filed before June 8, 1995. The terminal disclaimer must dedicate to the public a terminal part of the term of any patent granted on the application equivalent to the period of abandonment of the application, and must also apply to any patent

granted on any application containing a specific reference under 35 U.S.C. 120, 121, or 365(c) to the application for which revival is sought.

Any request for reconsideration of this decision must be submitted within **TWO (2) MONTHS** from the mail date of this decision. Extensions of time under 37 CFR 1.136(a) are permitted. The reconsideration request should include a cover letter entitled "Renewed Petition under 37 CFR 1.137(b)." This is **not** a final agency action within the meaning of 5 U.S.C. § 704.

Further correspondence with respect to this matter should be addressed as follows:

By Mail: Mail Stop PETITION
Commissioner for Patents
P. O. Box 1450
Alexandria, VA 22313-1450

By hand: U. S. Patent and Trademark Office
Customer Service Window, Mail Stop Petitions
Randolph Building
401 Dulany Street
Alexandria, VA 22314

The centralized facsimile number is **(571) 273-8300.**

Telephone inquiries concerning this decision should be directed to Diane Goodwyn at (571) 272-6735.

April M. Wise
Petitions Examiner
Office of Petitions

UNITED STATES PATENT AND TRADEMARK OFFICE

Commissioner for Patents
United States Patent and Trademark Office
P.O. Box 1450
Alexandria, VA 22313-1450
www.uspto.gov

VISTA IP LAW GROUP LLP
2040 MAIN STREET, 9TH FLOOR
IRVINE, CA 92614

COPY MAILED

JUN 19 2008

OFFICE OF PETITIONS

In re Application of	:	
Thomas Ray SAKAGUCHI	:	
Application No. 29/251,673	:	DECISION ON PETITION
Filed: January 10, 2006	:	
Attorney Docket No. PEAR-136	:	

This is a decision on the renewed petition under the unintentional provisions of 37 CFR 1.137(b), filed June 2, 2008, to revive the above-identified application.

The petition is **GRANTED**.

The application became abandoned for failure to timely pay the issue fee on or before January 12, 2008. As required by the Notice of Allowance and Fee(s) Due, mailed October 11, 2007, which set a statutory period for reply of three (3) months. Accordingly, the application became abandoned on January 12, 2008.

The petition satisfies the requirements of 37 CFR 1.137(b) in that petitioner has supplied (1) the reply in the form of payment of the Issue Fee of $410; (2) the petition fee of $770; (3) an adequate statement of unintentional delay; and (4) a Terminal Disclaimer.

Telephone inquiries concerning this decision should be directed to Diane Goodwyn at (571) 272-6735.

This application is being referred to the Office of Data Management for processing.

Thurman K. Page

Thurman Page
Petitions Examiner
Office of Petitions

UNITED STATES PATENT AND TRADEMARK OFFICE

Commissioner for Patents
United States Patent and Trademark Office
P.O. Box 1450
Alexandria, VA 22313-1450
www.uspto.gov

NIXON & VANDERHYE, PC
901 NORTH GLEBE ROAD, 11TH FLOOR
ARLINGTON VA 22203

COPY MAILED

MAR 1 4 2008

OFFICE OF PETITIONS

ON PETITION

In re Application of
Philip Thomas Stallard
Application No. 29/251,704
Filed: January 12, 2006
Attorney Docket No.: 4398-490

This is a decision on the petition filed May 22, 2007 to rescind the notice of abandonment for the above-identified application. The petition is being treated under 37 CFR 1.181.

The petition under 37 CFR 1.181 is **DISMISSED**.

Any request for reconsideration of this decision must be submitted within **TWO (2) MONTHS** from the mail date of this decision. Extensions of time under 37 CFR 1.136(a) are permitted. The reconsideration request should include a cover letter entitled "Renewed Petition under 37 CFR 1.181," or, as explained in more detail below, "...under 37 CFR 1.137(a)" or (b). This is not a final agency decision.

This application was held abandoned on February 21, 2007 and a Notice of Abandonment was mailed March 28, 2007 for the applicant's failure to file corrected drawings in response to the Notice of Allowability.

Petitioner asserts that corrected drawings were not required based on telephone conversations with the Examiner wherein the Examiner of Record agreed to cancel claims which would place the application in condition for allowance and in view thereof, no drawings were filed in response to the Notice.

Petitioner's arguments have been considered but are not persuasive.
Petitioners are advised that if an Office communication is mailed and that in the absence of that communication not being withdrawn by the USPTO, then by law a response is required. The failure to file a response causes the application to become abandoned, even if that communication was sent in error. There is no evidence that the applicants filed a written response or query as is required by 37 CFR 1.2. Therefore, applicants are not afforded an opportunity then to withhold a written response to an office communication even based on a conversation and reliance upon that conversation with an office employee.

Furthermore, the Examiner of Record, has confirmed that it is written in the Supplemental Notice of Allowability that Figs. 8-16 must be cancelled and the rest of the drawings must be renumbered.

This application properly became abandoned for failure to file a timely reply to the Notice of Allowability and therefore the Notice of Abandonment mailed March 28, 2007 was appropriate.

In view thereof, the holding of abandonment will not be withdrawn.

ALTERNATIVE VENUES

Petitioner may wish to consider filing a renewed petition under 37 CFR 1.137(a)[1] or 37 CFR 1.137(b),[2] which now provides that where the delay in reply was unintentional, a petition may be filed to revive an abandoned application or a lapsed patent pursuant to 37 CFR 1.137(b).

The filing of a petition under the unintentional standard cannot be intentionally delayed

---

[1]A grantable petition under 37 CFR 1.137(a) must be accompanied by:

(1) the required reply, unless previously filed; In a nonprovisional application abandoned for failure to prosecute, the required reply may be met by the filing of a continuing application. In a nonprovisional utility or plant application filed on or after June 8, 1995, and abandoned for failure to prosecute, the required reply may also be met by the filing of a request for continued examination in compliance with § 1.114. In an application or patent, abandoned or lapsed for failure to pay the issue fee or any portion thereof, the required reply must be the payment of the issue fee or any outstanding balance thereof.

(2) the petition fee as set forth in 37 CFR 1.17(l);

(3) a showing to the satisfaction of the Commissioner that the entire delay in filing the required reply from the due date for the reply until the filing of a grantable petition pursuant to 37 CFR 1.137(a) was unavoidable; and

(4) any terminal disclaimer (and fee as set forth in 37 CFR 1.20(d)) required pursuant to 37 CFR 1.137(c)).

[2]Effective December 1, 1997, the provisions of 37 CFR 1.137(b) now provide that where the delay in reply was unintentional, a petition may be filed to revive an abandoned application or a lapsed patent pursuant to 37 CFR 1.137(b). A grantable petition filed under the provisions of 37 CFR 1.137(b) must be accompanied by:

(1) the required reply, unless previously filed. In a nonprovisional application abandoned for failure to prosecute, the required reply may be met by the filing of a continuing application. In a nonprovisional application filed on or after June 8, 1995, and abandoned for failure to prosecute, the required reply may also be met by the filing of a request for continued examination in compliance with § 1.114. In an application or patent, abandoned or lapsed for failure to pay the issue fee or any portion thereof, the required reply must be the payment of the issue fee or any outstanding balance thereof. In an application abandoned for failure to pay the publication fee, the required reply must include payment of the publication fee.

(2) the petition fee as set forth in 37 CFR 1.17(m);

(3) a statement that the entire delay in filing the required reply from the due date for the reply until the filing of a grantable petition pursuant to 37 CFR 1.137(b) was unintentional. The Commissioner may required additional information where there is a question whether the delay was unintentional; and

(4) any terminal disclaimer (and fee as set forth in 37 CFR 1.20(d)) required pursuant to 37 CFR 1.137(c)).

and therefore should be filed promptly. A person seeking revival due to unintentional delay cannot make a statement that the delay was unintentional unless the entire delay, including the delay from the date it was discovered that the application was abandoned until the filing of the petition to revive under 37 CFR 1.137(b), was unintentional. A statement that the delay was unintentional is not appropriate if petitioner intentionally delayed the filing of a petition for revival under 37 CFR 1.137(b).

Further correspondence with respect to this matter should be addressed as follows:

By mail: Mail Stop Petition
Commissioner for Patents
P.O. Box 1450
Alexandria, VA 22313-1450

By FAX: (571) 273-8300

Telephone inquiries concerning this matter may be directed to the undersigned Petitions Attorney at (571) 272-3212.

Patricia Faison-Ball

Patricia Faison-Ball
Senior Petitions Attorney
Office of Petitions

UNITED STATES PATENT AND TRADEMARK OFFICE

UNITED STATES DEPARTMENT OF COMMERCE
United States Patent and Trademark Office
Address: COMMISSIONER FOR PATENTS
P.O. Box 1450
Alexandria, Virginia 22313-1450
www.uspto.gov

APPLICATION NO.	FILING DATE	FIRST NAMED INVENTOR	ATTORNEY DOCKET NO.	CONFIRMATION NO.
29/251,704	01/12/2006	Philip Thomas Stallard	4398-490	6388

23117 7590 10/28/2008
NIXON & VANDERHYE, PC
901 NORTH GLEBE ROAD, 11TH FLOOR
ARLINGTON, VA 22203

EXAMINER
LEE, CHRISTOPHER

ART UNIT	PAPER NUMBER
2916	

MAIL DATE	DELIVERY MODE
10/28/2008	PAPER

Please find below and/or attached an Office communication concerning this application or proceeding.

The time period for reply, if any, is set in the attached communication.

UNITED STATES PATENT AND TRADEMARK OFFICE

Commissioner for Patents
United States Patent and Trademark Office
P.O. Box 1450
Alexandria, VA 22313-1450
www.uspto.gov

10-28-08

NIXON & VANDERHYE, PC
901 NORTH GLEBE ROAD, 11TH FLOOR
ARLINGTON, VA 22203

In re Application of STALLARD, PHILIP THOMAS Serial No.: 29251704 Filed: 1/12/2006	DIRECTOR'S DECISION

This is decision on the request filed 10/14/2008 to reconsider the Petition Decision issued on March 14, 2008. The request for reconsideration is DISMISSED because it was not timely filed. Any request for reconsideration or review of a decision refusing to revive an abandoned application ... to be considered timely, must be filed within two months of the decision refusing to revive .... 37 CFR § 1.137(e)

The following decision is made *sua sponte* by the Director of USPTO Technology Center 2900:

The petition decision of 03/14/2008 dismissing the applicant's request to rescind the Notice of Abandonment of 03/28/2007 is vacated. It has been determined that the petition dismissal of 03/14/2008 was made without benefit of all the facts.

The petition was dismissed because applicant did not respond to the drawing corrections required in the 11/28/2006 Supplemental Notice of Allowability and the Office did not withdraw the drawing requirements.

After interviewing the Examiner in this case, Chris Lee and his Supervisor, Ian Simmons, it was learned the drawing corrections required in the 11/28/2006 Supplemental Notice of Allowability were made in error.

Applicant's 02/20/2007 remarks is considered fully responsive to the 11/28/2006 Supplemental Notice of Allowability. The 03/28/2007 Noticed of Abandonment is herby withdrawn.

This application is being forwarded to the examiner to ensure the drawings and specification are in order.

/Jasemine C. Chambers/
Jasemine C. Chambers, Ph.D., J.D.
Director, Technology Center 2900, Designs

js

Doc Code:

PTO/SB/27 (09-04)
Approved for use through 07/31/2006. OMB 0651-0031
U.S. Patent and Trademark Office; U.S. DEPARTMENT OF COMMERCE

Under the Paperwork Reduction Act of 1995, no persons are required to respond to a collection of information unless it displays a valid OMB control number.

REQUEST FOR EXPEDITED EXAMINATION OF A DESIGN APPLICATION (37 CFR 1.155)		
	Application Number	Unknown
	Filing Date	January 11, 2006
	First Named Inventor	Phil Trigiani
	Title	PORTABLE WORK LIGHT
	Atty Docket Number	111084-176

113006 U.S. PTO
29/251727
011106

ADDRESS TO:

MAIL STOP EXPEDITED DESIGN
COMMISSIONER FOR PATENTS
P.O. Box 1450
Alexandria, VA 22313-1450

Approved 4-11-06
Jacqueline M. Stone
Jacqueline M. Stone, Director
Technology Center 1700

This is a request for expedited examination of a design application under 37 CFR 1.155.

NOTE: If the Request made by this form accompanies original application papers, include form PTO/SB/18 "Design Patent Application Transmittal" or its equivalent.

A preexamination search was conducted. The field of search was:

Design Class 26 subclasses 37-50; class 362 subclasses 102, 184, 244 and 577.

Related applications:

If not previously filed for the above-identified application, the following items required by 37 CFR 1.155 are enclosed:

Formal drawings (see 37 CFR 1.84).
The fee set forth in 37 CFR 1.17(k).
An information disclosure statement in compliance with 37 CFR 1.98.

Robert Gould	January 11, 2006
Signature	Date
Robert M. Gould	43,642
Typed or printed name	Registration Number, if applicable
(312) 807-4244	
Telephone Number	

WARNING: Information on this form may become public. Credit card information should not be included on this form. Provide credit card information and authorization on PTO-2038.

This collection of information is required by 37 CFR 1.155. The information is required to obtain or retain a benefit by the public which is to file (and by the USPTO to process) an application. Confidentiality is governed by 35 U.S.C. 122 and 37 CFR 1.11 and 1.14. This collection is estimated to take 6 minutes to complete, including gathering, preparing, and submitting the completed application form to the USPTO. Time will vary depending upon the individual case. Any comments on the amount of time you require to complete this form and/or suggestions for reducing this burden, should be sent to the Chief Information Officer, U.S. Patent and Trademark Office, U.S. Department of Commerce, P.O. Box 1450, Alexandria, VA 22313-1450. DO NOT SEND FEES OR COMPLETED FORMS TO THIS ADDRESS. SEND TO: Commissioner for Patents, P.O. Box 1450, Alexandria, VA 22313-1450.

If you need assistance in completing the form, call 1-800-PTO-9199 and select option 2.

16179 U.S. PTO
011206

PTO/SB/27 (09-04)
Approved for use through 07/31/2006. OMB 0651-0031
U.S. Patent and Trademark Office; U.S. DEPARTMENT OF COMMERCE
Under the Paperwork Reduction Act of 1995, no persons are required to respond to a collection of information unless it displays a valid OMB control number.

REQUEST FOR EXPEDITED EXAMINATION OF A DESIGN APPLICATION (37 CFR 1.155)

Application Number	Not Yet Assigned
Filing Date	Concurrently Herewith
First Named Inventor	Martin Keen
Title	SHOE UPPER WITH LACING
Atty Docket Number	TIMBER 3.1-033 DIV I

113008 U.S. PTO
29/251,731
011206

ADDRESS TO:
MS Expedited Design
Commissioner for Patents
P.O. Box 1450
Alexandria, VA 22313-1450

This is a request for expedited examination of a design application under 37 CFR 1.155.

NOTE: If the Request made by this form accompanies original application papers, include form PTO/SB/18 "Design Patent Application Transmittal" or its equivalent.

Approved 2-14-06
Jacqueline M. Stone
Jacqueline M. Stone, Director
Technology Center 1700

A preexamination search was conducted. The field of search was:

Class D02, Subclasses 896, 903, 911, 912, 916, 919, 923, 926, 928, 929, 930, 931, 932, 933, 934, 935, 936, 937, 943, 944, 973 and 978; Class 36, Subclasses 7.5, 11.5, 50.1, 51, 52, 53, 54; and Class 24, Subclasses 712, 712.1, 712.2, 712.3, 712.4, 712.5, 712.6, 712.7, 712.8, 712.9, 713, 713.1, 713.2, 713.3, 713.4, 713.5, 713.6, 713.7, 713.8, 713.9, 714, 714.1, 714.2, 714.3, 714.4, 714.5, 714.6, 714.7, and 714.8.

Related applications: This application is a divisional of U.S. Utility Patent Application No. 11/182,970, attorney docket number TIMBER 3.0-033, filed July 15, 2005 and entitled "SHOE WITH LACING" and is a divisional of U.S. Design Patent Application No. 29/234,283, attorney docket number TIMBER 3.1-033 filed July 15, 2005 and entitled "SHOE WITH LACING." This application is also related to the following U.S. Design Patent Applications filed concurrently herewith: attorney docket number TIMBER 3.1-033 DIV II, entitled "SHOE UPPER WITH PROJECTIONS"; attorney docket number TIMBER 3.1-033 DIV III, entitled "SHOE UPPER WITH PROJECTIONS"; attorney docket number TIMBER 3.1-033 DIV IV, entitled "SHOE UPPER TOE CAP"; attorney docket number TIMBER 3.1-033 DIV V, entitled "SHOE UPPER WITH LACING"; and attorney docket number TIMBER 3.1-033 DIV VI, entitled "SHOE UPPER WITH LACING", all by Martin Keen.

If not previously filed for the above-identified application, the following items required by 37 CFR 1.155 are enclosed:

- Formal drawings (see 37 CFR 1.84).
- The fee set forth in 37 CFR 1.17(k). Please charge $900.00 to Deposit Account No. 12-1095.
- An information disclosure statement in compliance with 37 CFR 1.98.

Signature	January 12, 2006 Date
Andrew T. Zidel Typed or printed name	45,256 Registration Number, if applicable
(908) 518-6385 Telephone Number	

Express Mail Label No. EV 342607418 US Dated: January 12, 2006

01/17/2006 LWONDIM1 00000005 121095 29251731
04 FC:1802 900.00 DA

621547_1.DOC

PTO/SB/27 (09-04)
Approved for use through 07/31/2006. OMB 0651-0031
U.S. Patent and Trademark Office; U.S. DEPARTMENT OF COMMERCE
Under the Paperwork Reduction Act of 1995, no persons are required to respond to a collection of information unless it displays a valid OMB control number.

REQUEST FOR EXPEDITED EXAMINATION OF A DESIGN APPLICATION (37 CFR 1.155)		
	Application Number	Not Yet Assigned
	Filing Date	Concurrently Herewith
	First Named Inventor	Martin Keen
	Title	SHOE UPPER WITH LACING
	Atty Docket Number	TIMBER 3.1-033 DIV VI

113006 U.S. PTO
29/251732
011206

ADDRESS TO:
MS Expedited Design
Commissioner for Patents
P.O. Box 1450
Alexandria, VA 22313-1450

This is a request for expedited examination of a design application under 37 CFR 1.155.

Approved 2-14-06
Jacqueline M. Stone
Jacqueline M. Stone, Director
Technology Center 1700

NOTE: If the Request made by this form accompanies original application papers, include form PTO/SB/18 "Design Patent Application Transmittal" or its equivalent.

A preexamination search was conducted. The field of search was:

Class D02, Subclasses 896, 903, 911, 912, 916, 919, 923, 926, 928, 929, 930, 931, 932, 933, 934, 935, 936, 937, 943, 944, 973 and 978; Class 36, Subclasses 7.5, 11.5, 50.1, 51, 52, 53, 54; and Class 24, Subclasses 712, 712.1, 712.2, 712.3, 712.4, 712.5, 712.6, 712.7, 712.8, 712.9, 713, 713.1, 713.2, 713.3, 713.4, 713.5, 713.6, 713.7, 713.8, 713.9, 714, 714.1, 714.2, 714.3, 714.4, 714.5, 714.6, 714.7, and 714.8.

Related applications: This application is a divisional of U.S. Utility Patent Application No. 11/182,970, attorney docket number TIMBER 3.0-033, filed July 15, 2005 and entitled "SHOE WITH LACING." This application is related to co-pending U.S. Design Patent Application No. 29/234,283, attorney docket number TIMBER 3.1-033 filed July 15, 2005 and entitled "SHOE WITH LACING." This application is also related to the following U.S. Design Patent Applications filed concurrently herewith: attorney docket number TIMBER 3.1-033 DIV I, entitled "SHOE UPPER WITH LACING"; attorney docket number TIMBER 3.1-033 DIV II, entitled "SHOE UPPER WITH PROJECTIONS"; attorney docket number TIMBER 3.1-033 DIV III, entitled "SHOE UPPER WITH PROJECTIONS"; attorney docket number TIMBER 3.1-033 DIV IV, entitled "SHOE UPPER TOE CAP"; and attorney docket number TIMBER 3.1-033 DIV V, entitled "SHOE UPPER WITH LACING", all by Martin Keen.

If not previously filed for the above-identified application, the following items required by 37 CFR 1.155 are enclosed:

- Formal drawings (see 37 CFR 1.84).
- The fee set forth in 37 CFR 1.17(k). Please charge $900.00 to Deposit Account No. 12-1095
- An information disclosure statement in compliance with 37 CFR 1.98.

Signature	January 12, 2006 Date
Andrew T. Zidel Typed or printed name	45,256 Registration Number, if applicable
(908) 518-6385 Telephone Number	

Express Mail Label No. EV 342607364 US Dated: January 12, 2006

01/17/2006 LWONDIM1 00000006 121095 29251732
04 FC:1802 900.00 DA

UNITED STATES PATENT AND TRADEMARK OFFICE

Commissioner for Patents
United States Patent and Trademark Office
P.O. Box 1450
Alexandria, VA 22313-1450
www.uspto.gov

Robert L. Powley and Nancy Juette,
Powley & Gibson, P.C.
2nd Floor
304 Hudson Street
New York NY 10013

COPY MAILED

JAN 0 4 2008

OFFICE OF PETITIONS

In re Application of

Kip Arnette

Application No. 29/251,766

Filed: January 12, 2006

Attorney Docket No. 112.19 (US)

DECISION ON PETITION

This is a decision on the petition under 37 CFR §1.137(b), filed December 10, 2007, to revive the above-identified application.

The petition is **dismissed**.

Any request for reconsideration of this decision must be submitted within TWO (2) MONTHS from the mail date of this decision. Extensions of time under 37 CFR 1.136(a) are permitted. The reconsideration request should include a cover letter entitled "Renewed Petition" under 37 CFR 1.137(b)."

This application became abandoned for failure to respond in a timely manner to the Notice of Allowance and Issue Fee Due and the Notice of Allowability mailed April 23, 2007. The notices allowed statutory periods for reply of three months from their mailing date. No reply was received within the allowable period, and the application became abandoned on July 24, 2007. A Notice of Abandonment of was mailed on August 16, 2007.

Effective December 1, 1997, the provisions of 37 CFR 1.137(b) now provide that where the delay in reply was unintentional, a petition may be filed to revive an abandoned application or a lapsed patent pursuant to 37 CFR 1.137(b). A grantable petition pursuant to 37 CFR 1.137(b) must be accompanied by:

(1) the required reply, unless previously filed. In a non-provisional application abandoned for failure to prosecute, the required reply may be met by the filing of a continuing application. In an application or patent, abandoned or lapsed for failure to pay the issue fee, or any portion thereof, the required reply must be the payment of the issue fee or any outstanding balance thereof.

(2) the petition fee as set forth in 37 CFR 1.17(m);

(3) a statement that the entire delay in filing the required reply from the due date for the reply until the filing of a grantable petition pursuant to 37 CFR 1.137(b) was unintentional. The Commissioner may require additional information where there is a question whether the delay was unintentional; and

(4) any terminal disclaimer (and fee set forth in 37 CFR 1.20(d)) required pursuant to 37 CFR 1.137(d).

The instant petition does not satisfy the requirements of items (1) and (2) above.

As to item (1), the fee for the issue fee is $410.00, however, only $400.00 was remitted for the issue fee. The renewed petition must be accompanied by an additional $10.00 toward the satisfaction of the issue fee payment.

As to item (3), the petition fee is $770.00, however, only $750.00 was remitted for the petition fee. The renewed petition must be accompanied by an additional $20.00 toward the satisfaction of petition fee.

Further correspondence with respect to this matter should be addressed as follows:

By mail: Mail Stop Petitions
Commissioner for Patents
United States Patent and Trademark Office
Box 1450
Alexandria, VA 22313-1450

By facsimile: (571) 273-8300

Telephone inquiries concerning this matter may be directed to the undersigned at (571) 272-3222.

Kenya A. McLaughlin
Petitions Attorney
Office of Petitions

UNITED STATES PATENT AND TRADEMARK OFFICE

Commissioner for Patents
United States Patent and Trademark Office
P.O. Box 1450
Alexandria, VA 22313-1450
www.uspto.gov

Robert L. Powley and Nancy Juette,
Powley & Gibson, P.C.
2nd Floor
304 Hudson Street
New York, NY 10013

COPY MAILED

FEB 15 2008

OFFICE OF PETITIONS

In re Application of: :
Kip Arnette :
Application No. 29/251,766 :
Filed: January 12, 2006 :
Attorney Docket No. 112.19 (US) :

DECISION ON PETITION

This is a decision on the renewed petition under 37 CFR §1.137(b), January 22, 2008, to revive the above-identified application.

The renewed petition is **granted.**

This application became abandoned for failure to timely remit the issue fee of $410.00.00 as required by the Notice of Allowance and Issue Fee Due (the "Notice") mailed April 23, 2007. The Notice set forth a three (3) month statutory period for reply. Accordingly, this application became abandoned on July 24, 2007. A Notice of Abandonment was mailed on August 16, 2007. A petition under 37 CFR 1.137(b) was first filed on December 10, 2007, and dismissed by a decision mailed January 4, 2008.

The issue fee was received on January 22, 2008. The terminal disclaimer filed December 10, 2007, is also noted.

The application is being forwarded to the Office of Patent Publications for processing into a patent.

Telephone inquiries concerning this matter may be directed to the undersigned at (571) 272-3222.

Kenya A. McLaughlin
Petitions Attorney
Office of Petitions

Express Mail Label No. EV 342607378 US Dated: January 12, 2006

TIMBER 3.1-033 DIV V
(PATENT)

IN THE UNITED STATES PATENT AND TRADEMARK OFFICE

In re Design Application of:
Martin Keen

29-257788

Application No.: Not Yet Assigned Confirmation No.: N/A

Filed: Concurrently Herewith 1-12-06 Art Unit: N/A 2913

For: SHOE UPPER WITH LACING Examiner: Not Yet Assigned

PETITION TO MAKE SPECIAL UNDER 37 C.F.R. § 1.102 AND 604 M.P.E.P. § 708.02 AND INFORMATION DISLOSURE STATEMENT

Commissioner for Patents
P.O. Box 1450
Alexandria, VA 22313-1450

Dear Sir:

Pursuant to the provisions of 37 C.F.R. § 1.102 and M.P.E.P. § 708.02, applicant hereby petitions the Commissioner, through his attorney of record, that the above-identified design application be made special and that the prosecution thereof be expedited as much as possible.

In support of this Petition to Make Special, applicant submits herewith a Declaration by Andrew T. Zidel reporting a search for prior art, copies of the references identified during the search as provided in M.P.E.P. § 708.02 VIII, and the fee required under 36 C.F.R. § 1.17(h). Form PTO/SB/08 listing the references is also enclosed.

The enclosed Declaration on the search for prior art describes who made the search, supplies one copy of each of the references, and submits a detailed discussion of the references, including how the invention is distinguishable from the

01/17/2006 CNEGA1 00000075 29251788
04 FC:1464 130.00 DA

FEB 17 2006
PETITION GRANTED

William Krynski
Special Program Examiner
Technology Center 1700

Express Mail Label No. EV 342607404 US Dated: January 12, 2006

TIMBER 3.1-033 DIV II
(PATENT)

IN THE UNITED STATES PATENT AND TRADEMARK OFFICE

In re Design Application of:
Martin Keen

29-257789

Application No.: Not Yet Assigned — Confirmation No.: N/A

Filed: Concurrently Herewith 1-12-06 — Art Unit: N/A 2913

For: SHOE UPPER WITH PROJECTIONS — Examiner: Not Yet Assigned

PETITION TO MAKE SPECIAL UNDER 37 C.F.R. § 1.102 AND M.P.E.P. § 708.02 AND INFORMATION DISLOSURE STATEMENT 604

Commissioner for Patents
P.O. Box 1450
Alexandria, VA 22313-1450

Dear Sir:

Pursuant to the provisions of 37 C.F.R. § 1.102 and M.P.E.P. § 708.02, applicant hereby petitions the Commissioner, through his attorney of record, that the above-identified design application be made special and that the prosecution thereof be expedited as much as possible.

In support of this Petition to Make Special, applicant submits herewith a Declaration by Andrew T. Zidel reporting a search for prior art, copies of the references identified during the search as provided in M.P.E.P. § 708.02 VIII, and the fee required under 36 C.F.R. § 1.17(h). Form PTO/SB/08 listing the references is also enclosed.

The enclosed Declaration on the search for prior art describes who made the search, supplies one copy of each of the references, and submits a detailed discussion of the references, including how the invention is distinguishable from the references. Should the Examiner require more information, he or she is encouraged to contact the undersigned.

It is respectfully requested that the references listed on the enclosed Form PTO/SB/08 be made o

FEB 17 2006
PETITION GRANTED

William Krynski
Special Program Examiner
Technology Center 1700

01/17/2006 CHEGA1 00000074 29251789
04 FC:1464 130.00 DA

Express Mail Label No. EV 342607395 US Dated: January 12, 2006

TIMBER 3.1-033 DIV III
(PATENT)

IN THE UNITED STATES PATENT AND TRADEMARK OFFICE

In re Design Application of:
Martin Keen

29-251790

Application No.: Not Yet Assigned Confirmation No.: N/A

Filed: Concurrently Herewith Art Unit: N/A 2913

1-12-06

For: SHOE UPPER WITH PROJECTIONS Examiner: Not Yet Assigned

PETITION TO MAKE SPECIAL UNDER 37 C.F.R. § 1.102 AND M.P.E.P. § 708.02 AND INFORMATION DISLOSURE STATEMENT

Commissioner for Patents
P.O. Box 1450
Alexandria, VA 22313-1450

Dear Sir:

Pursuant to the provisions of 37 C.F.R. § 1.102 and M.P.E.P. § 708.02, applicant hereby petitions the Commissioner, through his attorney of record, that the above-identified design application be made special and that the prosecution thereof be expedited as much as possible.

In support of this Petition to Make Special, applicant submits herewith a Declaration by Andrew T. Zidel reporting a search for prior art, copies of the references identified during the search as provided in M.P.E.P. § 708.02 VIII, and the fee required under 36 C.F.R. § 1.17(h). Form PTO/SB/08 listing the references is also enclosed.

The enclosed Declaration on the search for prior art describes who made the search, supplies one copy of each of the references, and submits a detailed discussion of the references, including how the invention is distinguishable from the references. Should the Examiner require more information, he or she is encouraged to contact the undersigned.

It is respectfully requested that the enclosed Form PTO/SB/08 be made of

FEB 17 2006
PETITION GRANTED

William Krynski
Special Program Examiner
Technology Center 1700

01/17/2006 CNEGA1 00000072 29251790
04 FC:1464 130.00 DA

UNITED STATES PATENT AND TRADEMARK OFFICE

Commissioner for Patents
United States Patent and Trademark Office
P.O. Box 1450
Alexandria, VA 22313-1450
www.uspto.gov

JOHN G. POSA
GIFFORD, KRASS, GROH, SPRINKLE
ANDERSON & CITKOWSKI, P.C.
PO BOX 7021
TROY MI 48007-7021

COPY MAILED

JAN 28 2008

OFFICE OF PETITIONS

In re Application of	:	
Joshua Pokempner et al	:	
Application No. 29/251,793	:	ON PETITION
Filed: January 12, 2006	:	
Attorney Docket No. GUP-10117/29	:	

This is a decision on the request, filed June 15, 2007, which is being treated as a petition under 37 CFR 1.181(a) to Withdraw Holding of Abandonment.

The petition under 37 CFR 1.181(a) is **GRANTED**.

The application was held abandoned for failure to timely reply to the Nonfinal Rejection mailed September 27, 2006.

The petition states that a reply was timely submitted on December 27, 2006. Petitioner also asserts that upon electronically filing the subject response in late December 2006, the acknowledgment receipt shows an application number of 29/275,470, instead of application no. 29/251,793 the correct application number. To support this assertion, the petitioner has submitted a copy of the response, along with an acknowledgment receipt of December 27, 2006. Further, Office records now show that a response was timely submitted on December 27, 2006 for the above Application No. 29/251,793.

In view of the above, the holding of abandonment is hereby withdrawn and the application restored to pending status.

Telephone inquiries concerning this decision should be directed to the undersigned at (571) 272-3208.

This matter is being referred to Technology Center AU 2912.

Karen Creasy

Karen Creasy
Petitions Examiner
Office of Petitions

UNITED STATES PATENT AND TRADEMARK OFFICE

Commissioner for Patents
United States Patent and Trademark Office
P.O. Box 1450
Alexandria, VA 22313-1450
www.uspto.gov

MCNEES WALLACE & NURICK LLC
100 PINE STREET
P.O. BOX 1166
HARRISBURG, PA 17108-1166

COPY MAILED

DEC 0 2 2008

OFFICE OF PETITIONS

In re Application of :
Joshua Pokempner, et al. :
Application No. 29/251,793 : ON PETITION
Filed: January 12, 2006 :
Attorney Docket No. 22402-0150-DES1 :

This is a decision on the petition under the unintentional provisions of 37 CFR 1.137(b), filed August 7, 2008, to revive the above-identified application.

This application became abandoned for failure to timely to submit corrected formal drawings on or before July 7, 2008, as required by the Notice of Allowance and Fee(s) Due and the Notice of Allowability, mailed April 4, 2008. Accordingly, the date of abandonment of this application is July 8, 2008.

The petition is **DISMISSED**.

A grantable petition under 37 CFR 1.137(b) must be accompanied by: (1) the required reply, unless previously filed; (2) the petition fee as set forth in 37 CFR 1.17(m); (3) a statement that the entire delay in filing the required reply from the due date for the reply until the filing of a grantable petition pursuant to 37 CFR 1.137(b) was unintentional; and (4) any terminal disclaimer (and fee as set forth in 37 CFR 1.20(d)) required by 37 CFR 1.137(d). Where there is a question as to whether either the abandonment or the delay in filing a petition under 37 CFR 1.137 was unintentional, the Director may require additional information. See MPEP 711.03(c)(II)(C) and (D). The instant petition lacks item(s) (4).

A terminal disclaimer and the $65 terminal disclaimer fee is required under 37 CFR 1.137(d) if the application is: (1) a design application, (2) a utility application filed before June 8, 1995, or (3) a plant application filed before June 8, 1995. The terminal disclaimer must dedicate to the public a terminal part of the term of any patent granted the application equivalent to the period of abandonment of the application, and must also apply to any patent granted on any application containing a specific reference under 35 U.S.C. 120, 121 or 365(c) to the application for which revival is sought.

The application file does not indicate a change of address has been filed in this case, although the address given on the petition differs from the address of record. A change of address should be filed in this case in accordance with MPEP 601.03. A courtesy copy of this decision is being mailed to the address noted on the petition. However, until otherwise instructed, all future correspondence regarding this application will be mailed solely to the address of record.

Any request for reconsideration of this decision must be submitted within **TWO (2) MONTHS** from the mail date of this decision. Extensions of time under 37 CFR 1.136(a) are permitted. The reconsideration request should include a cover letter entitled "Renewed Petition under 37 CFR 1.137(b)." This is **not** a final agency action within the meaning of 5 U.S.C. § 704.

Further correspondence with respect to this matter should be addressed as follows:

By Mail: Mail Stop PETITION
Commissioner for Patents
P. O. Box 1450
Alexandria, VA 22313-1450

By hand: U. S. Patent and Trademark Office
Customer Service Window, Mail Stop Petitions
Randolph Building
401 Dulany Street
Alexandria, VA 22314

The centralized facsimile number is **(571) 273-8300.**

Telephone inquiries concerning this decision should be directed to the undersigned at (571) 272-1642.

April M. Wise
Petitions Examiner
Office of Petitions

Attachment: blank copy of Terminal Disclaimer Form

cc: COURTNEY J. MILLER
21 EAST STATE STREET
SUITE 1700
COLUMBUS, OH 43215

PTO/SB/63 (11-08)
Approved for use through 12/31/2008. OMB 0651-0031
U.S. Patent and Trademark Office; U.S. DEPARTMENT OF COMMERCE
Under the Paperwork Reduction Act of 1995, no persons are required to a collection of information unless it displays a valid OMB control number.

TERMINAL DISCLAIMER TO ACCOMPANY PETITION

Docket Number (Optional)

In re Application of:

Name:

Application Number:

Filed:

For:

The owner*, _____ of _____ percent interest in the above-identified application hereby disclaims a terminal part of the term of any patent granted the above-identified application equivalent to: (1) if the above-identified application is a design application, the period of abandonment of the above-identified application, and (2) if the above-identified application is a utility or plant application, the lesser of: (a) the period of abandonment of the application; or (b) the period extending beyond twenty years from the date on which the above-identified application was filed in the United States or, if the application contains a specific reference to an earlier filed application(s) under 35 U.S.C. 120, 121, or 365(c), from the date on which the earliest such application was filed. This disclaimer also applies to any patent granted on a utility or plant application filed before June 8, 1995, or a design application, that contains a specific reference under 35 U.S.C. 120, 121, or 365(c) to the above-identified application. This disclaimer is binding upon the grantee, and its successors or assigns.

Check either box 1 or 2 below, if appropriate.

1. ☐ For submissions on behalf of an organization (e.g., corporation, partnership, university, government agency, etc.), the undersigned is empowered to act on behalf of the organization.
2. ☐ The undersigned is an attorney or agent of record. Registration Number_____.

Signature	Date
Typed or Printed Name	Telephone Number

☐ Terminal disclaimer fee under 37 CFR 1.20(d) included.

WARNING: Information on this form may become public. Credit card information should not be included on this form. Provide credit card information and authorization on PTO-2038.

* Statement under 37 CFR 3.73(b) is required if terminal disclaimer is signed by the assignee (owner). Form PTO/SB/96 may be used for making this certification. See MPEP § 324.

This collection of information is required by 37 CFR 1.137. The information is required to obtain or retain a benefit by the public which is to file (and by the USPTO to process) an application. Confidentiality is governed by 35 U.S.C. 122 and 37 CFR 1.11 and 1.14. This collection is estimated to take 12 minutes to complete, including gathering, preparing, and submitting the completed application form to the USPTO. Time will vary depending upon the individual case. Any comments on the amount of time you require to complete this form and/or suggestions for reducing this burden, should be sent to the Chief Information Officer, U.S. Patent and Trademark Office, U.S. Department of Commerce, P.O. Box 1450, Alexandria, VA 22313-1450. DO NOT SEND FEES OR COMPLETED FORMS TO THIS ADDRESS. **SEND TO: Commissioner for Patents, P.O. Box 1450, Alexandria, VA 22313-1450.**

If you need assistance in completing the form, call 1-800-PTO-9199 and select option 2.

Privacy Act Statement

The **Privacy Act of 1974 (P.L. 93-579)** requires that you be given certain information in connection with your submission of the attached form related to a patent application or patent. Accordingly, pursuant to the requirements of the Act, please be advised that: (1) the general authority for the collection of this information is 35 U.S.C. 2(b)(2); (2) furnishing of the information solicited is voluntary; and (3) the principal purpose for which the information is used by the U.S. Patent and Trademark Office is to process and/or examine your submission related to a patent application or patent. If you do not furnish the requested information, the U.S. Patent and Trademark Office may not be able to process and/or examine your submission, which may result in termination of proceedings or abandonment of the application or expiration of the patent.

The information provided by you in this form will be subject to the following routine uses:

1. The information on this form will be treated confidentially to the extent allowed under the Freedom of Information Act (5 U.S.C. 552) and the Privacy Act (5 U.S.C 552a). Records from this system of records may be disclosed to the Department of Justice to determine whether disclosure of these records is required by the Freedom of Information Act.
2. A record from this system of records may be disclosed, as a routine use, in the course of presenting evidence to a court, magistrate, or administrative tribunal, including disclosures to opposing counsel in the course of settlement negotiations.
3. A record in this system of records may be disclosed, as a routine use, to a Member of Congress submitting a request involving an individual, to whom the record pertains, when the individual has requested assistance from the Member with respect to the subject matter of the record.
4. A record in this system of records may be disclosed, as a routine use, to a contractor of the Agency having need for the information in order to perform a contract. Recipients of information shall be required to comply with the requirements of the Privacy Act of 1974, as amended, pursuant to 5 U.S.C. 552a(m).
5. A record related to an International Application filed under the Patent Cooperation Treaty in this system of records may be disclosed, as a routine use, to the International Bureau of the World Intellectual Property Organization, pursuant to the Patent Cooperation Treaty.
6. A record in this system of records may be disclosed, as a routine use, to another federal agency for purposes of National Security review (35 U.S.C. 181) and for review pursuant to the Atomic Energy Act (42 U.S.C. 218(c)).
7. A record from this system of records may be disclosed, as a routine use, to the Administrator, General Services, or his/her designee, during an inspection of records conducted by GSA as part of that agency's responsibility to recommend improvements in records management practices and programs, under authority of 44 U.S.C. 2904 and 2906. Such disclosure shall be made in accordance with the GSA regulations governing inspection of records for this purpose, and any other relevant (*i.e.*, GSA or Commerce) directive. Such disclosure shall not be used to make determinations about individuals.
8. A record from this system of records may be disclosed, as a routine use, to the public after either publication of the application pursuant to 35 U.S.C. 122(b) or issuance of a patent pursuant to 35 U.S.C. 151. Further, a record may be disclosed, subject to the limitations of 37 CFR 1.14, as a routine use, to the public if the record was filed in an application which became abandoned or in which the proceedings were terminated and which application is referenced by either a published application, an application open to public inspection or an issued patent.
9. A record from this system of records may be disclosed, as a routine use, to a Federal, State, or local law enforcement agency, if the USPTO becomes aware of a violation or potential violation of law or regulation.

UNITED STATES PATENT AND TRADEMARK OFFICE

Commissioner for Patents
United States Patent and Trademark Office
P.O. Box 1450
Alexandria, VA 22313-1450
www.uspto.gov

MCNEES, WALLACE & NURICK, LLC
100 PINE STREET
P.O. BOX 1166
HARRISBURG, PA 17108-1166

MAILED

MAR 13 2009

OFFICE OF PETITIONS

In re Application of	:	
Joshua Pokempner, et al.	:	
Application No. 29/251,793	:	DECISION ON PETITION
Filed: January 12, 2006	:	
Attorney Docket No. 22402-0150-DES1	:	

This is a decision on the renewed petition under the unintentional provisions of 37 CFR 1.137(b), filed February 2, 2009, to revive the above-identified application.

This application became abandoned for failure to timely submit corrected formal drawings on or before July 7, 2008, as required by the Notice of Allowance and Fee(s) Due and the Notice of Allowability, mailed April 4, 2008. Accordingly, the date of abandonment of this application is July 8, 2008.

The petition satisfies the requirements of 37 CFR 1.137(b) in that petitioner has supplied (1) the reply in the form of the corrected drawings; (2) the petition fee of $1540; (3) a proper statement of unintentional delay; and (4) a terminal disclaimer and fee as required by 37 CFR 1.137(d). Accordingly, the failure to timely file corrected drawings required by the Notice of Allowability is accepted as being unintentionally delayed.

The terminal disclaimer is accepted and has been made of record. Any continuing application filed from this application must contain a copy of the terminal disclaimer. The copy of the terminal disclaimer must be filed with a cover letter requesting the terminal disclaimer be recorded on the continuing application. A copy of this decision should be attached to the cover letter.

The petition is **GRANTED**.

The drawings have been approved by the USPTO draftsperson.

Telephone inquiries concerning this decision should be directed to undersigned at (571) 272-1642. All other inquiries concerning the status of this application should be directed to the Office of Data Management.

This application is being referred to the Office of Data Management for processing into a patent.

April M. Wise
Petitions Examiner
Office of Petitions

PTO/SB/27 (05-03)
Approved for use through 04/30/2003. OMB 0651-0031
U.S. Patent and Trademark Office; U.S. DEPARTMENT OF COMMERCE
Under the Paperwork Reduction Act of 1995, no persons are required to respond to a collection of information unless it displays a valid OMB control number.

REQUEST FOR EXPEDITED EXAMINATION OF A DESIGN APPLICATION (37 CFR 1.155)

Application Number	TO BE ASSIGNED
Filing Date	January 17, 2006
First Named Inventor	Jenny Chen
Title	Portion Of A Shoe Upper
Atty Docket Number	015127.00657

113000 U.S. PTO
29/251832
011706

HAND DELIVER TO THE DESIGN GROUP DIRECTOR'S OFFICE
-or- ADDRESS TO:
MAIL STOP EXPEDITED DESIGN
COMMISSIONER FOR PATENTS
P.O. Box 1450
Alexandria, VA 22313-1450

This is a request for expedited examination of a design application under 37 CFR 1.155.

NOTE: If the Request made by this form accompanies original application papers, include form PTO/SB/18 "Design Patent Application Transmittal" or its equivalent.

Approved Jacqueline M. Stone 1-25-06
Jacqueline M. Stone, Director
Technology Center 1700

A preexamination search was conducted. The field of search was:

D2/896, 902, 907, 908, 943, 944, 969, 972, 973 and 974

Related applications: _____

If not previously filed for the above-identified application, the following items required by 37 CFR 1.155 are enclosed:

Formal drawings (see 37 CFR 1.84).

The fee set forth in 37 CFR 1.17(k).

An information disclosure statement in compliance with 37 CFR 1.98.

January 17, 2006	
Date	Signature
202-824-3000	David R. Gerk-Registration No. 56,901
Telephone Number	Typed or printed name

WARNING: Information on this form may become public. Credit card information should not be included on this form. Provide credit card information and authorization on PTO-2038.

This collection of information is required by 37 CFR 1.155. The information is required to obtain or retain a benefit by the public which is to file (and by the USPTO to process) an application. Confidentiality is governed by 35 U.S.C. 122 and 37 CFR 1.14. This collection is estimated to take 6 minutes to complete, including gathering, preparing, and submitting the completed application form to the USPTO. Time will vary depending upon the individual case. Any comments on the amount of time you require to complete this form and/or suggestions for reducing this burden, should be sent to the Chief Information Officer, U.S. Patent and Trademark Office, U.S. Department of Commerce, P.O. Box 1450, Alexandria, VA 22313-1450. DO NOT SEND FEES OR COMPLETED FORMS TO THIS ADDRESS. SEND TO: Mail Stop Expedited Design, Commissioner for Patents, P.O. Box 1450, Alexandria, VA 22313-1450.

If you need assistance in completing the form, call 1-800-PTO-9199 and select option 2.

01/18/2006 SSITHIB1 00000086 190733 29251832
04 FC:1802 900.00 DA

PTO/SB/27 (05-03)
Approved for use through 04/30/2003. OMB 0651-0031
U.S. Patent and Trademark Office; U.S. DEPARTMENT OF COMMERCE
Under the Paperwork Reduction Act of 1995, no persons are required to respond to a collection of information unless it displays a valid OMB control number.

REQUEST FOR EXPEDITED EXAMINATION OF A DESIGN APPLICATION (37 CFR 1.155)

Application Number	TBD
Filing Date	Herewith
First Named Inventor	David Joseph DIRSA
Title	PORTION OF A SHOE MIDSOLE
Atty Docket Number	015127.00655

113000 U.S. PTO
29/251833
011706

HAND DELIVER TO THE DESIGN GROUP DIRECTOR'S OFFICE
-or- ADDRESS TO:
MAIL STOP EXPEDITED DESIGN
COMMISSIONER FOR PATENTS
P.O. Box 1450
Alexandria, VA 22313-1450

This is a request for expedited examination of a design application under 37 CFR 1.155.

NOTE: If the Request made by this form accompanies original application papers, include form PTO/SB/18 "Design Patent Application Transmittal" or its equivalent.

Approved 4-6-06
Jacqueline M. Stone
Jacqueline M. Stone, Director
Technology Center 1700

A preexamination search was conducted. The field of search was:

D2/ 896, 902, 907, 908, 943, 944, 946, 964, 969, 972 and 977

Related applications: Attorney Docket No. 015127.00656

If not previously filed for the above-identified application, the following items required by 37 CFR 1.155 are enclosed:

Formal drawings (see 37 CFR 1.84).

The fee set forth in 37 CFR 1.17(k).

An information disclosure statement in compliance with 37 CFR 1.98.

JANUARY 17, 2006	
Date	Signature
202-824-3000	Darrell G. Mottley, Reg. No. 42,912
Telephone Number	Typed or printed name

WARNING: Information on this form may become public. Credit card information should not be included on this form. Provide credit card information and authorization on PTO-2038.

This collection of information is required by 37 CFR 1.155. The information is required to obtain or retain a benefit by the public which is to file (and by the USPTO to process) an application. Confidentiality is governed by 35 U.S.C. 122 and 37 CFR 1.14. This collection is estimated to take 6 minutes to complete, including gathering, preparing, and submitting the completed application form to the USPTO. Time will vary depending upon the individual case. Any comments on the amount of time you require to complete this form and/or suggestions for reducing this burden, should be sent to the Chief Information Officer, U.S. Patent and Trademark Office, U.S. Department of Commerce, P.O. Box 1450, Alexandria, VA 22313-1450. DO NOT SEND FEES OR COMPLETED FORMS TO THIS ADDRESS. SEND TO: Mail Stop Expedited Design, Commissioner for Patents, P.O. Box 1450, Alexandria, VA 22313-1450.

If you need assistance in completing the form, call 1-800-PTO-9199 and select option 2.

01/18/2006 SSITHIB1 00000085 29251833
01 FC:1012 200.00 DA
02 FC:1112 100.00 DA
03 FC:1312 130.00 DA
04 FC:1802 900.00 DA

PTO/SB/27 (05-03)
Approved for use through 04/30/2003. OMB 0651-0031
U.S. Patent and Trademark Office; U.S. DEPARTMENT OF COMMERCE
Under the Paperwork Reduction Act of 1995, no persons are required to respond to a collection of information unless it displays a valid OMB control number.

REQUEST FOR EXPEDITED EXAMINATION OF A DESIGN APPLICATION (37 CFR 1.155)

Application Number	TBD
Filing Date	Herewith
First Named Inventor	David Joseph DIRSA
Title	PORTION OF A SHOE MIDSOLE
Atty Docket Number	015127.00656

113000 U.S.PTO
29/251834
011706

HAND DELIVER TO THE DESIGN GROUP DIRECTOR'S OFFICE
-or- ADDRESS TO:
MAIL STOP EXPEDITED DESIGN
COMMISSIONER FOR PATENTS
P.O. Box 1450
Alexandria, VA 22313-1450

This is a request for expedited examination of a design application under 37 CFR 1.155.

NOTE: If the Request made by this form accompanies original application papers, include form PTO/SB/18 "Design Patent Application Transmittal" or its equivalent.

Approved
Jacqueline M. Stone 4-6-06
Jacqueline M. Stone, Director
Technology Center 1700

A preexamination search was conducted. The field of search was:

D2/ 896, 902, 907, 908, 943, 944, 946, 964, 969, 972 and 977

Related applications: Attorney Docket No. 015127.00655

If not previously filed for the above-identified application, the following items required by 37 CFR 1.155 are enclosed:

Formal drawings (see 37 CFR 1.84).

The fee set forth in 37 CFR 1.17(k).

An information disclosure statement in compliance with 37 CFR 1.98.

JANUARY 17, 2006
Date

Signature

202-824-3000
Telephone Number

Darrell G. Mottley, Reg. No. 42,912
Typed or printed name

WARNING: Information on this form may become public. Credit card information should not be included on this form. Provide credit card information and authorization on PTO-2038.

This collection of information is required by 37 CFR 1.155. The information is required to obtain or retain a benefit by the public which is to file (and by the USPTO to process) an application. Confidentiality is governed by 35 U.S.C. 122 and 37 CFR 1.14. This collection is estimated to take 6 minutes to complete, including gathering, preparing, and submitting the completed application form to the USPTO. Time will vary depending upon the individual case. Any comments on the amount of time you require to complete this form and/or suggestions for reducing this burden, should be sent to the Chief Information Officer, U.S. Patent and Trademark Office, U.S. Department of Commerce, P.O. Box 1450, Alexandria, VA 22313-1450. DO NOT SEND FEES OR COMPLETED FORMS TO THIS ADDRESS. SEND TO: Mail Stop Expedited Design, Commissioner for Patents, P.O. Box 1450, Alexandria, VA 22313-1450.

If you need assistance in completing the form, call 1-800-PTO-9199 and select option 2.

01/18/2006 SSITHIB1 00000084 190733 29251834
04 FC:1802 900.00 DA

PTO/SB/27 (05-03)
Approved for use through 04/30/2003. OMB 0651-0031
U.S. Patent and Trademark Office; U.S. DEPARTMENT OF COMMERCE
Under the Paperwork Reduction Act of 1995, no persons are required to respond to a collection of information unless it displays a valid OMB control number.

REQUEST FOR EXPEDITED EXAMINATION OF A DESIGN APPLICATION (37 CFR 1.155)

Application Number	TBD
Filing Date	Herewith
First Named Inventor	Andrew CAINE
Title	PORTION OF A SHOE MIDSOLE
Atty Docket Number	015127.00652

110000 US PTO
29/251835
011706

HAND DELIVER TO THE DESIGN GROUP DIRECTOR'S OFFICE
-or- ADDRESS TO:
MAIL STOP EXPEDITED DESIGN
COMMISSIONER FOR PATENTS
P.O. Box 1450
Alexandria, VA 22313-1450

This is a request for expedited examination of a design application under 37 CFR 1.155.

NOTE: If the Request made by this form accompanies original application papers, include form PTO/SB/18 "Design Patent Application Transmittal" or its equivalent.

Approved Jacqueline M. Stone 4-6-06
Jacqueline M. Stone, Director
Technology Center 1700

A preexamination search was conducted. The field of search was:

D2/ 896, 902, 907, 908, 943, 944, 946, 964, 969, 972 and 977

Related applications: Attorney Docket No. 015127.00653

If not previously filed for the above-identified application, the following items required by 37 CFR 1.155 are enclosed:

Formal drawings (see 37 CFR 1.84).

The fee set forth in 37 CFR 1.17(k).

An information disclosure statement in compliance with 37 CFR 1.98.

JANUARY 17, 2006
Date

Signature

202-824-3000
Telephone Number

Darrell G. Mottley, Reg. No. 42,912
Typed or printed name

WARNING: Information on this form may become public. Credit card information should not be included on this form. Provide credit card information and authorization on PTO-2038.

This collection of information is required by 37 CFR 1.155. The information is required to obtain or retain a benefit by the public which is to file (and by the USPTO to process) an application. Confidentiality is governed by 35 U.S.C. 122 and 37 CFR 1.14. This collection is estimated to take 6 minutes to complete, including gathering, preparing, and submitting the completed application form to the USPTO. Time will vary depending upon the individual case. Any comments on the amount of time you require to complete this form and/or suggestions for reducing this burden, should be sent to the Chief Information Officer, U.S. Patent and Trademark Office, U.S. Department of Commerce, P.O. Box 1450, Alexandria, VA 22313-1450. DO NOT SEND FEES OR COMPLETED FORMS TO THIS ADDRESS. SEND TO: Mail Stop Expedited Design, Commissioner for Patents, P.O. Box 1450, Alexandria, VA 22313-1450.

If you need assistance in completing the form, call 1-800-PTO-9199 and select option 2.

01/18/2006 SSITHIB1 00000083 190733 29251835
04 FC:1802 900.00 DA

PTO/SB/27 (05-03)
Approved for use through 04/30/2003. OMB 0651-0031
U.S. Patent and Trademark Office; U.S. DEPARTMENT OF COMMERCE
Under the Paperwork Reduction Act of 1995, no persons are required to respond to a collection of information unless it displays a valid OMB control number.

REQUEST FOR EXPEDITED EXAMINATION OF A DESIGN APPLICATION (37 CFR 1.155)

Application Number	TBD
Filing Date	Herewith
First Named Inventor	Andrew CAINE
Title	PORTION OF A SHOE MIDSOLE
Atty Docket Number	015127.00653

113000 U.S. PTO
29/251836
011706

HAND DELIVER TO THE DESIGN GROUP DIRECTOR'S OFFICE
-or- ADDRESS TO:
MAIL STOP EXPEDITED DESIGN
COMMISSIONER FOR PATENTS
P.O. Box 1450
Alexandria, VA 22313-1450

This is a request for expedited examination of a design application under 37 CFR 1.155.

NOTE: If the Request made by this form accompanies original application papers, include form PTO/SB/18 "Design Patent Application Transmittal" or its equivalent.

A preexamination search was conducted. The field of search was:

D2/ 896, 902, 907, 908, 943, 944, 946, 964, 969, 972 and 977

Related applications: Attorney Docket No. 015127.00652

If not previously filed for the above-identified application, the following items required by 37 CFR 1.155 are enclosed:

Formal drawings (see 37 CFR 1.84).

The fee set forth in 37 CFR 1.17(k).

An information disclosure statement in compliance with 37 CFR 1.98.

4-11-06
Approved
Jacqueline M. Stone
Jacqueline M. Stone, Director
Technology Center 1700

JANUARY 17, 2006
Date

Signature

202-824-3000
Telephone Number

Darrell G. Mottley, Reg. No. 42,912
Typed or printed name

WARNING: Information on this form may become public. Credit card information should not be included on this form. Provide credit card information and authorization on PTO-2038.

This collection of information is required by 37 CFR 1.155. The information is required to obtain or retain a benefit by the public which is to file (and by the USPTO to process) an application. Confidentiality is governed by 35 U.S.C. 122 and 37 CFR 1.14. This collection is estimated to take 6 minutes to complete, including gathering, preparing, and submitting the completed application form to the USPTO. Time will vary depending upon the individual case. Any comments on the amount of time you require to complete this form and/or suggestions for reducing this burden, should be sent to the Chief Information Officer, U.S. Patent and Trademark Office, U.S. Department of Commerce, P.O. Box 1450, Alexandria, VA 22313-1450. DO NOT SEND FEES OR COMPLETED FORMS TO THIS ADDRESS. SEND TO: Mail Stop Expedited Design, Commissioner for Patents, P.O. Box 1450, Alexandria, VA 22313-1450.

If you need assistance in completing the form, call 1-800-PTO-9199 and select option 2.

01/18/2006 SSITHIB1 00000082 190733 29251836
04 FC:1802 900.00 DA

UNITED STATES PATENT AND TRADEMARK OFFICE

Commissioner for Patents
United States Patent and Trademark Office
P.O. Box 1450
Alexandria, VA 22313-1450
www.uspto.gov

STEVENS & SHOWALTER LLP
7019 CORPORATE WAY
DAYTON OH 45459-4238

COPY MAILED

JAN 23 2008

OFFICE OF PETITIONS

In re Application of	:
Aleksandar Tatic	: DECISION GRANTING PETITION
Application No. 29/251,892	: UNDER 37 CFR 1.313(c)(3) (CPA)
Filed: January 13, 2006	:
Attorney Docket No. LEO 001 DA	:

This is a decision on the petition under 37 CFR 1.313(c)(3), filed January 21, 2008, to withdraw the above-identified application from issue after payment of the issue fee.

The petition is **GRANTED**.

The above-identified application is hereby withdrawn from issue in favor of a continued prosecution application (CPA) under 37 CFR 1.53(d).

Petitioner is advised that the issue fee paid on December 10, 2007 in the parent application is not refundable nor can it be applied towards any new Notice of Allowance which may issue on the CPA filed January 21, 2008.

Telephone inquiries should be directed to the undersigned at (571) 272-3208.

This matter is being referred to Technology Center AU 2913 for processing of the CPA and consideration of the concurrently filed IDS.

Karen Creasy

Karen Creasy
Petitions Examiner
Office of Petitions

UNITED STATES PATENT AND TRADEMARK OFFICE

Commissioner for Patents
United States Patent and Trademark Office
P.O. Box 1450
Alexandria, VA 22313-1450
www.uspto.gov

CALVIN CHU
1230 OAKMEAD PARKWAY
SUITE 304
SUNNYVALE CA 94085

COPY MAILED

DEC 28 2006

OFFICE OF PETITIONS

In re Application of	:	
Joel Miller	:	DECISION ON PETITION
Application No. 29/251,934	:	
Filed: January 17, 2006	:	
Title: Rugged, Water and Dust Resistant Handheld and Mountable GPS Device	:	

This is a decision on the petition to withdraw the holding of abandonment under 37 CFR 1.181, filed November 6, 2006.

The petition under 37 CFR 1.181 is **DISMISSED** as moot.

The Office mailed a Notice of Abandonment on October 26, 2006, due to failure to timely pay the issue fee in response to a June 12, 2006 Notice of Allowance. Applicants filed the instant petition to withdraw the holding of abandonment on November 6, 2006. Prior to a decision on the petition being rendered, the Office mailed a new Notice of Rescinded Abandonment, together with a new Notice of Allowance, on December 8, 2006. In view thereof, consideration of the instant petition is unnecessary.

The mater is being forwarded to the Office of Patent Publication to await applicant's reply to the December 8, 2006 Notice of Allowance.

Telephone inquiries related to this decision should be directed to the undersigned at (571)272-3207.

Cliff Congo
Petitions Attorney
Office of Petitions

UNITED STATES PATENT AND TRADEMARK OFFICE

Commissioner for Patents
United States Patent and Trademark Office
P.O. Box 1450
Alexandria, VA 22313-1450
www.uspto.gov

JJGJR.: 03-06

Paper No: __

SAIDMAN DESIGNLAW GROUP
8601 GEORGIA AVE
SUITE 603
SILVER SPRING MD 20910

COPY MAILED
APR 0 5 2006
OFFICE OF PETITIONS

In re Application of	:	
Lehman, et al.	:	
Application No. 29/251,937	:	DECISION
Receipt/Filing Date: 17 January, 2006	:	
Attorney Docket No. 1724.L:001C2	:	

This is a decision on the petition filed on 7 March, 2006, and considered herein under 37 C.F.R. §1.53.

The instant petition is **DISMISSED**.

BACKGROUND

The instant application was deposited on 17 January, 2006.

On 14 February, 2006, the Office of Initial Patent Examination (OIPE) mailed a "Notice of Omitted Items," (the Notice) and indicated, *inter alia*, that, while a filing date had been accorded to the application, it appeared that Fig. 3 and 4, as described in the specification, had been omitted from the application on deposit.

OIPE indicated that Petitioner might: contend via petition that Fig. 3 and 4, as described in the specification had been submitted and provide evidence thereof and a true copy of the drawings in question, or submit the drawings and accept the date of submission as the date of filing, or accept the application as it appeared to have been received on deposit. Moreover, as to the first

alternative, Petitioner might file a petition under 37 C.F.R. §1.182 (considered under 37 C.F.R. §1.53) as to the first contention.

Finally, OIPE set a two- (2-) month period for reply;

Petitioner filed the instant petition on 7 March, 2006, with, *inter alia*, a copy of the date-stamped ("011706") receipt card (see: MPEP §503[1]), copies of (inter alia, Figs. 3 and 4, as described in the specification, as averred to have been filed, and a request for a filing date of 17 January, 2006, for the application, including Fig. 3 and 4, as described in the specification.

Analysis

A search of the official file reveals that:

- on 17 January, 2006, Petitioner deposited the instant application;

---

[1] MPEP §503 provides in pertinent part:

§503 Application Number and Filing Receipt

* * *

A return postcard should be attached to *each* patent application for which a receipt is desired. It is important that the return postcard itemize all of the components of the application. If the postcard does not itemize each of the components of the application, it will not serve as evidence that any component which was not itemized was received by the United States Patent and Trademark Office (USPTO). It should be recognized that the identification of an application by application number does not necessarily signify that the USPTO has accepted the application as complete (37 C.F.R. §1.53(a)).

* * *

RETURN POSTCARD

If a receipt of any item (e.g., paper or fee) filed in the USPTO is desired, it may be obtained by enclosing with the paper a self-addressed postcard specifically identifying the item. The USPTO will stamp the receipt date on the postcard and place it in the outgoing mail. A postcard receipt which itemizes and properly identifies the items which are being filed serves as *prima facie* evidence of receipt in the USPTO of all the items listed thereon on the date stamped thereon by the USPTO.

The identifying data on the postcard should be so complete as to clearly identify the item for which receipt is requested. For example, the postcard should identify the applicant's name, application number (if known), confirmation number (if known), filing date, interference number, title of the invention, etc. The postcard should also identify the type of paper being filed, e.g., new application, affidavit, amendment, notice of appeal, appeal brief, drawings, fees, motions, supplemental oath or declaration, petition, etc., and the number of pages being submitted. If a new application is being filed, all parts of the application being submitted should be separately listed on the postcard, e.g., the number of pages of specification (including written description, claims and abstract), number of claims, number of sheets of drawings, number of pages of oath/declaration, number of pages of cover sheet (provisional application).

The postcard receipt will not serve as *prima facie* evidence of receipt of any item which is not adequately itemized on the postcard. For example, merely listing on the postcard "a complete application" or "patent application" will not serve as a proper receipt for each of the required components of an application (e.g., specification (including claims), drawings (if necessary), oath or declaration and the application filing fee) or missing portions (e.g., pages, sheets of drawings) of an application if one of the components or portion of a component is found to be missing by the USPTO. Each separate component should be specifically and properly itemized on the postcard. Furthermore, merely incorporating by reference in the postcard receipt, the items listed in a transmittal letter will not serve as *prima facie* evidence of receipt of those items.

The person receiving the item(s) in the USPTO will check the listing on the postcard against the item(s) being filed to be sure they are properly identified and that all the items listed on the postcard are presently being submitted to the USPTO. If any of the items listed on the postcard are not being submitted to the USPTO, those items will be crossed off and the post-card initialed by the person receiving the items. Upon return of a postcard receipt from the USPTO, the postcard receipt should be promptly reviewed by the person who filed the items to ensure that every item specifically denoted on the postcard was received by the USPTO. If the postcard receipt has been annotated to indicate that a particular item denoted on the postcard was not received by the USPTO, the postcard receipt will not serve as *prima facie* evidence of receipt of that item in the USPTO. (Emphasis supplied.)

- the date-stamped receipt card evidences the following, in pertinent part:

* * *

1. Design Patent Application Transmittal (PTO/SB/18) including all items listed thereon; and

2. Certificate of Express Mailing

* * *

- the file contains two copies of the sheet of drawings containing Figs. 5 and 6.

As is clear from the express statement on the face of the receipt card, Petitioner:

- did not have "every item specifically denoted on the postcard,"[2] and

- has itemized nothing of the application, save the application transmittal page.

Petitioner's attempt to "bootstrap" the receipt card to the transmittal sheet clearly comports neither with the express commentary at MPEP §503, nor with prudent practice in light of same.

Because Petitioner did not adequately itemized the contents of the application on the receipt card, it is concluded that the Notice mailed on 14 February, 2006, does not appear to have been sent in error and will not be altered.

CONCLUSION

The petition is **dismissed;** because the petition appears not to have been prompted by Office error, the fee will not be waived or refunded.

This application is released to OIPE for further processing consistent with this decision.

Telephone inquiries specific to this decision should be directed to the undersigned at (571) 272-3214.

John J. Gillon, Jr.
Senior Attorney
Office of Petitions

---

[2] MPEP §503.

UNITED STATES PATENT AND TRADEMARK OFFICE

Commissioner for Patents
United States Patent and Trademark Office
P.O. Box 1450
Alexandria, VA 22313-1450
www.uspto.gov
DIW Mar-09

CHRISTIAN D. ABEL
ONSAGERS AS
POSTBOKS 6963 ST. OLAVS PLASS
NORWAY N-013-0
NORWAY

COPY MAILED

MAR 02 2009

OFFICE OF PETITIONS

In re Application of	:	
Berndt Stellander	:	
Application Number: 29/251982	:	ON PETITION
Filing Date: 01/18/2006	:	
Attorney Docket Number:	:	
D11252US00	:	

This is a decision on the "PETITION TO WITHDRAW HOLDING OF ABANDONONMENT UNDER 37 CFR §1.181, or in the alternative under 37 CFR §1.137(b)," filed on February 13, 2008.

The petition is **dismissed.**

Any request for reconsideration of this decision must be submitted within TWO (2) MONTHS from the mail date of this decision. Extensions of time under 37 CFR 1.136(a) are permitted. The reconsideration request should include a cover letter entitled "Renewed Petition Under 37 CFR 1.137(b)." or Renewed Petition to Withdraw Holding of Abandonment. This is not a final agency decision.

The application became abandoned on January 13, 2008, for failure to timely submit the issue fee in response to the Notice of Allowance and Fee(s) mailed on October 12, 2007. Notice of Abandonment was mailed on February 8, 2008. On February 13, 2008, the issue fee and the subject petition was filed.

PETITION TO WITHDRAW THE HOLDING OF ABANDONMENT

Petitioner asserts that the issue fee was timely filed because a Supplemental Notice of Allowability For a Design Application was

mailed on November 19, 2007, and the issue fee was submitted within three (3) months of the mailing date of the Supplemental Notice mailed on November 19, 2007.

Petitioners' argument has been considered, but is not persuasive. The Notice of Allowance and Fee(s) Due mailed on October 12, 2007, set a three (3) month statutory time period for the filing of the issue fee. The Notice of Allowability mailed on October 12, 2007, set a time period for filing corrected drawings. On November 19, 2007, a Supplemental Notice of Allowability was mailed, stating that no corrected drawings were required. No new Notice of Allowance and Fee Due was mailed however.

As such, the Notice of Allowance and Fee(s) Due mailed on October 12, 2007, and the Supplemental Notice of Allowability mailed on November 19, 2007 set concurrent but distinct requirements with which petitioners were required to reply. Therefore, although the Supplemental Notice of Allowability did not require formal drawings, the period for submission of the issue fee remained as set forth in the Notice of Allowance and Fee(s) Due mailed on October 12, 2007. As the issue fee was not timely filed in response to the Notice mailed on October 12, 2007, the application became abandoned as a matter of law on January 13, 2008, for failure to timely submit the issue fee.

The petition to withdraw the holding of abandonment is therefore **dismissed.**

PETITION UNDER 37 CFR 1.137(b)

37 CFR 1.137(b) states that if the delay in reply by applicant or patent owner was unintentional, a petition may be filed pursuant to this paragraph to revive an abandoned application, a reexamination prosecution terminated under §§ 1.550(d) or 1.957(b) or limited under § 1.957(c), or a lapsed patent. A grantable petition pursuant to this paragraph must be accompanied by:

(1) The reply required to the outstanding Office action or notice, unless previously filed;

(2) The petition fee as set forth in § 1.17(m);

(3) A statement that the entire delay in filing the required reply from the due date for the reply until the filing of a grantable petition pursuant to this paragraph was unintentional. The Director may require additional information where there is a question whether the delay was unintentional; and

(4) Any terminal disclaimer (and fee as set forth in § 1.20(d)) required pursuant to paragraph (d) of this section.

The petition lacks a terminal disclaimer and fee as required by 37 CFR 1.137(d), which states that any petition to revive pursuant to this section in a design application must be accompanied by a terminal disclaimer and fee as set forth in § 1.321 dedicating to the public a terminal part of the term of any patent granted thereon equivalent to the period of abandonment of the application.

A copy of the terminal disclaimer form is enclosed for petitioner's use.

It is also noted that the statement of unintentional delay does not state that that the entire delay in filing the required reply from the due date for the reply until the filing of a grantable petition pursuant to 37 CFR 1.137(b) was unintentional.

It is recommended that the attached petition form be utilized when filing a renewed petition.

The petition fee will be charged to counsel's deposit account as authorized in the subject petition. No additional petition fee is required.

Further correspondence with respect to this matter should be addressed as follows:

By mail: Mail Stop Petition
Commissioner for Patents
P.O. Box 1450
Alexandria, VA 22313-1450

By FAX: (571) 273-8300
Attn: Office of Petitions

By hand: Customer Service Window
Mail Stop Petition
Randolph Building
401 Dulany Street
Alexandria, VA 22314

Telephone inquiries concerning this matter may be directed to the undersigned at (571)272-3231.

D Wood

Douglas I. Wood
Senior Petitions Attorney
Office of Petitions

Encl: PTO/SB/63
PTO/SB/64

Privacy Act Statement

The **Privacy Act of 1974 (P.L. 93-579)** requires that you be given certain information in connection with your submission of the attached form related to a patent application or patent. Accordingly, pursuant to the requirements of the Act, please be advised that: (1) the general authority for the collection of this information is 35 U.S.C. 2(b)(2); (2) furnishing of the information solicited is voluntary; and (3) the principal purpose for which the information is used by the U.S. Patent and Trademark Office is to process and/or examine your submission related to a patent application or patent. If you do not furnish the requested information, the U.S. Patent and Trademark Office may not be able to process and/or examine your submission, which may result in termination of proceedings or abandonment of the application or expiration of the patent.

The information provided by you in this form will be subject to the following routine uses:

1. The information on this form will be treated confidentially to the extent allowed under the Freedom of Information Act (5 U.S.C. 552) and the Privacy Act (5 U.S.C 552a). Records from this system of records may be disclosed to the Department of Justice to determine whether disclosure of these records is required by the Freedom of Information Act.
2. A record from this system of records may be disclosed, as a routine use, in the course of presenting evidence to a court, magistrate, or administrative tribunal, including disclosures to opposing counsel in the course of settlement negotiations.
3. A record in this system of records may be disclosed, as a routine use, to a Member of Congress submitting a request involving an individual, to whom the record pertains, when the individual has requested assistance from the Member with respect to the subject matter of the record.
4. A record in this system of records may be disclosed, as a routine use, to a contractor of the Agency having need for the information in order to perform a contract. Recipients of information shall be required to comply with the requirements of the Privacy Act of 1974, as amended, pursuant to 5 U.S.C. 552a(m).
5. A record related to an International Application filed under the Patent Cooperation Treaty in this system of records may be disclosed, as a routine use, to the International Bureau of the World Intellectual Property Organization, pursuant to the Patent Cooperation Treaty.
6. A record in this system of records may be disclosed, as a routine use, to another federal agency for purposes of National Security review (35 U.S.C. 181) and for review pursuant to the Atomic Energy Act (42 U.S.C. 218(c)).
7. A record from this system of records may be disclosed, as a routine use, to the Administrator, General Services, or his/her designee, during an inspection of records conducted by GSA as part of that agency's responsibility to recommend improvements in records management practices and programs, under authority of 44 U.S.C. 2904 and 2906. Such disclosure shall be made in accordance with the GSA regulations governing inspection of records for this purpose, and any other relevant (*i.e.*, GSA or Commerce) directive. Such disclosure shall not be used to make determinations about individuals.
8. A record from this system of records may be disclosed, as a routine use, to the public after either publication of the application pursuant to 35 U.S.C. 122(b) or issuance of a patent pursuant to 35 U.S.C. 151. Further, a record may be disclosed, subject to the limitations of 37 CFR 1.14, as a routine use, to the public if the record was filed in an application which became abandoned or in which the proceedings were terminated and which application is referenced by either a published application, an application open to public inspection or an issued patent.
9. A record from this system of records may be disclosed, as a routine use, to a Federal, State, or local law enforcement agency, if the USPTO becomes aware of a violation or potential violation of law or regulation.

UNITED STATES PATENT AND TRADEMARK OFFICE

Commissioner for Patents
United States Patent and Trademark Office
P.O. Box 1450
Alexandria, VA 22313-1450
www.uspto.gov
DIW Apr-09

CHRISTIAN D. ABEL
ONSAGERS AS
POSTBOKS 6963 ST. OLAVS PLASS
NORWAY N-013-0
NORWAY

MAILED

APR 23 2009

OFFICE OF PETITIONS

In re Application of	:	
Berndt Stellander	:	
Application Number: 29/251982	:	ON PETITION
Filing Date: 01/18/2006	:	
Attorney Docket Number:	:	
D11252US00	:	

This is a decision on the renewed petition under 37 CFR 1.137(b)[1] filed on March 17, 2009, to revive the above-identified application.

The petition is **GRANTED**.

---

[1] Effective December 1, 1997, the provisions of 37 CFR 1.137(b) now provide that where the delay in reply was unintentional, a petition may be filed to revive an abandoned application or a lapsed patent pursuant to 37 CFR 1.137(b). A grantable petition filed under the provisions of 37 CFR 1.137(b) must be accompanied by:

(1) the required reply, unless previously filed. In a nonprovisional application abandoned for failure to prosecute, the required reply may be met by the filing of a continuing application. In a nonprovisional application filed on or after June 8, 1995, and abandoned for failure to prosecute, the required reply may also be met by the filing of a request for continued examination in compliance with § 1.114. In an application or patent, abandoned or lapsed for failure to pay the issue fee or any portion thereof, the required reply must be the payment of the issue fee or any outstanding balance thereof. In an application abandoned for failure to pay the publication fee, the required reply must include payment of the publication fee.

(2) the petition fee as set forth in 37 CFR 1.17(m);

(3) a statement that the entire delay in filing the required reply from the due date for the reply until the filing of a grantable petition pursuant to 37 CFR 1.137(b) was unintentional. The Director may required additional information where there is a question whether the delay was unintentional; and

(4) any terminal disclaimer (and fee as set forth in 37 CFR 1.20(d)) required pursuant to 37 CFR 1.137(c)).

The application became abandoned on January 13, 2008, for failure to timely submit the issue fee in response to the Notice of Allowance and Fee(s) mailed on October 12, 2007. Notice of Abandonment was mailed on February 8, 2008. On February 13, 2008, the issue fee and the initial petition were filed. On March 2, 2009, the petition was dismissed.

On March 17, 2009, the subject renewed petition was filed, accompanied by a terminal disclaimer and authorization to charge the terminal disclaimer fee.

The terminal disclaimer filed on March 17, 2009, under 37 CFR 1.137(c) has been entered and made of record. Effective September 8, 2000, 37 CFR 1.137(c)(1) has been added to state that a terminal disclaimer filed pursuant to this rule must dedicate to the public a terminal part of the term of any patent granted thereon equivalent to the lesser of: 1) the period of abandonment of the application; or 2) the period extending beyond twenty years from the date on which the application for patent was filed in the United States, or, if the application contains a specific reference to an earlier filed application(s) under 35 U.S.C. 120, 121, or 365(c).[2] Accordingly, the period of the terminal disclaimer filed on March 17, 2009, will be equivalent to the lesser period (1) or (2), as noted above, for this application.

The application is referred to the Office of Data Management for processing into a patent.

Telephone inquiries concerning this matter may be directed to the undersigned at (571)272-3231.

DWood

Douglas I. Wood
Senior Petitions Attorney
Office of Petitions

[2] 65 Fed. Reg. 54,674 (2000).

PTO/SB/27 (09-04)
Approved for use through 07/31/2006. OMB 0651-0031
U.S. Patent and Trademark Office; U.S DEPARTMENT OF COMMERCE
Under the Paperwork Reduction ACT of 1995, no persons are required to respond to collection of information unless it displays a valid OMB control number.

REQUEST FOR EXPEDITED EXAMINATION OF A DESIGN APPLICATION (37 CFR 1.155)

Application Number	UNASSIGNED
Filing Date	JANUARY 18, 2006
First Named Inventor	Philippe STARCK
Title	TOOTH BRUSH SANITIZER
Atty Docket Number	ZAP-0006

ADDRESS TO:

MAIL STOP EXPEDITED DESIGN
COMMISSIONER FOR PATENTS
P.O. Box 1450
Alexandria, VA 22313-1450

Approved
Jacqueline M. Stone 2-1-06
Jacqueline M. Stone, Director
Technology Center 1700

113006 U.S. PTO
29/252051
011806

This is a request for expedited examination of a design application under 37 CFR 1.155.

NOTE: If the Request made by this form accompanies original application papers, include form PTO/SB/18 "Design Patent Application Transmittal" or its equivalent.

A preexamination search was conducted. The field of search was:

Cl D6; 524, 534, 526-528
Cl 206; 208-209.1, 228, 361, 362, 362.1, 362.2, 362.3
Cl 211; 13.1; 65-66, 70.6

Related applications: 29/186,588; 10/622,788; 60/400,775; ZAP-0007

If not previously filed for the above-identified application, the following items required by 37 CFR 1.155 are enclosed:

- Formal drawings (see 37 CFR 1.84). ✓ (fee sheet attached - deposit account authorization)
- The fee set forth in 37 CFR 1.17(k). ✓
- An information disclosure statement in compliance with 37 CFR 1.98. ✓

Signature	1-18-2006 Date
Robert P. Bell Typed or printed name	34,546 Registration Number, if applicable
703-479-0757 Telephone Number	

01/20/2006 SSITHIB1 00000029 29252051
01 FC:2012 100.00 DA
02 FC:2112 50.00 DA
03 FC:2312 65.00 DA

WARNING: Information on this form may become public. Credit card information should not be included on this form. Provide credit card information and authorization on PTO-2038.

This collection of information is required by 37 CFR 1.155. The information is required to obtain or retain a benefit by the public which is to file (and by the USPTO to process) an application. Confidentiality is governed by 35 U.S.C. 122 and 37 CFR 1.11 and 1.14. This collection is estimated to take 6 minutes to complete, including gathering, preparing, and submitting the completed application form to the USPTO. Time will vary depending upon the individual case. Any comments on the amount of time you require to complete this form and/or suggestions for reducing this burden, should be sent to the Chief Information Officer, U.S. Patent and Trademark Office, U.S. Department of Commerce, P.O. Box 1450, Alexandria, VA 22313-1450. DO NOT SEND FEES OR COMPLETED FORMS TO THIS ADDRESS. SEND TO: Commissioner for Patents, P.O. Box 1450, Alexandria, VA 22313-1450.

If you need assistance in completing the form, call 1-800-PTO-9199 and select option 2.

01/20/2006 SSITHIB1 00000029 29252051
04 FC:1802 900.00 DA

UNITED STATES PATENT AND TRADEMARK OFFICE

Commissioner for Patents
United States Patent and Trademark Office
P.O. Box 1450
Alexandria, VA 22313-1450
www.uspto.gov

ROBERT PLATT BELL
REGISTERED PATENT ATTORNEY
P.O. BOX 13165
JEKYLL ISLAND, GA 31527

COPY MAILED

FEB 0 9 2007

OFFICE OF PETITIONS

In re Application of	:	
Philippe Starck et al	:	
Application No. 29/252,051	:	ON PETITION
Filed: January 18, 2006	:	
Attorney Docket No. ZAP-0006	:	

This is a decision on the petition under 37 CFR 1.137(b), filed August 14, 2006, to revive the above-identified application.

The petition is **GRANTED.**

The above-identified application became abandoned for failure to submit the Issue fee in a timely manner in reply to the Notice of Allowance mailed March 29, 2006, which set a statutory period for reply of three (3) months. Accordingly, the above-identified application became abandoned on June 30, 2006.

The petition satisfies the conditions for revival pursuant to the provisions of 37 CFR 1.137(b) in that (1) the reply in the form of payment of the issue fee; (2) the petition fee; (3) the required statement of unintentional delay have been received and (4) Terminal Disclaimer. Accordingly, the issue fee is accepted as having been unintentionally delayed.

Telephone inquiries concerning this decision should be directed to the undersigned at (571) 272-3210.

This application is being forwarded to the Publishing Division for further processing.

Irvin Dingle
Petitions Examiner
Office of Petitions

UNITED STATES PATENT AND TRADEMARK OFFICE

COMMISSIONER FOR PATENTS
UNITED STATES PATENT AND TRADEMARK OFFICE
P.O. BOX 1450
ALEXANDRIA, VA 22313-1450
WWW.USPTO.GOV

Paper No. None

COPY MAILED
FEB 0 2 2007
OFFICE OF PETITIONS

WHIRLPOOL PATENTS COMPANY - MD 0750
500 RENAISSANCE DRIVE - SUITE 102
ST. JOSEPH MI 49085

In re Application of Duane A. Schmidt, Allan R. Steinkuhl, and Joseph L. Coleman Application No. 29/252,075 Filed: January 18, 2006 Attorney Docket No. US20020314-4 Title: MODULAR DRAWERS	DECISION ON PETITION UNDER 37 C.F.R. §1.47(A)

This is in response to the petition submitted on September 29, 2006, under 37 C.F.R. §1.47(a)[1].

On January 18, 2006, the application was deposited, identifying Duane A. Schmidt, Allan R. Steinkuhl, and Joseph L. Coleman as

---

1 A grantable petition under 37 C.F.R. §1.47(a) requires:
(1) the petition fee of $200;
(2) a surcharge of either $65 or $130 if the petition is not filed at the time of filing the application, as set forth in 37 CFR § 1.16(f);
(3) a statement of the last known address of the non-signing inventors;
(4) either
a) proof that a copy of the entire application (specification, claims, drawings, and the oath or declaration) was sent or given to the non-signing inventor for review and proof that the non-signing inventor refuses to join in the application or
b) proof that the non-signing inventor cannot be found or reached after diligent effort;
(5) a declaration which complies with 37 C.F.R. §1.63.

joint inventors. On August 23, 2006, applicant was mailed a Notice of Allowance and Issue Fee Due (notice), indicating that a substitute oath or declaration would be required.

With the present petition, Petitioner's representative has submitted the petition fee, the associated surcharge, and a declaration that has been executed by each of the joint inventors save Mr. Schmidt. Petitioner's representative has met requirements (1), (2), and (5) of Rule §1.47(a). The second requirement is not applicable.

Regarding the third requirement of Rule §1.47(a), Petitioner's representative has failed to include a statement of the last known address of the non-signing inventor[2].

Regarding the fourth requirement of Rule §1.47(a), it does not appear that Petitioner's representative has sent a complete copy of the application to the non-signing inventor. Petitioner's representative has indicated that Mr. Schmidt signed the original declaration. It is noted that Mr. Schmidt signed this declaration on February 5, 2003, and that he orally refused to execute the substitute declaration on June 20, 2006.

While it is possible that Mr. Schmidt retains a copy of the application that was provided to him more than three years prior, it is equally possible that he has since disposed of it or misplaced it. Furthermore, it does not appear that the declaration that Mr. Schmidt has executed is associated with the present application. As such, Petitioner's representative has shown that a complete copy of the application was *not* provided to the non-signing inventor recently, for his review.

A refusal by an inventor to sign an oath or declaration when the inventor has not been presented with the application papers does not itself suggest that the inventor is refusing to join the application unless it is clear that the inventor understands exactly what he or she is being asked to sign and refuses to accept the application papers. It is reasonable to require that the inventor be presented with the application papers before a petition under 37 C.F.R. §1.47 is granted since such a procedure ensures that the inventor is apprised of the application to which the oath or declaration is directed[3].

As such, this petition under 37 C.F.R. §1.47(a) must be **DISMISSED.**

---

2 See MPEP 409.03(e).
3 In re Gray, 115 USPQ 80 (Comm'r Pat. 1956).

Any reply must be submitted within **TWO MONTHS** from the mail date of this decision. Extensions of time under 37 C.F.R. §1.136(a) are permitted. The reply should include a cover letter entitled "Renewed Petition Under 37 C.F.R. §1.47(a)". This is not a final agency action within the meaning of 5 U.S.C 704.

The renewed petition should indicate in a prominent manner that the attorney handling this matter is Paul Shanoski, and may be submitted by mail[4], hand-delivery[5], or facsimile[6].

If responding by mail, Petitioner's representative is advised not to place the undersigned's name on the envelope. Only the information that appears in the footnote should be included - adding anything else to the address will delay the delivery of the response to the undersigned.

Telephone inquiries regarding *this decision* should be directed to the undersigned at (571) 272-3225[7]. All other inquiries concerning examination procedures or status of the application should be directed to the Technology Center.

Paul Shanoski

Paul Shanoski
Senior Attorney
Office of Petitions
United States Patent and Trademark Office

---

4 Mail Stop Petition, Commissioner for Patents, United States Patent and Trademark Office, P.O. Box 1450, Alexandria, VA, 22313-1450.
5 Customer Window, Randolph Building, 401 Dulaney Street, Alexandria, VA, 22314.
6 (571) 273-8300- please note this is a central facsimile number.
7 Petitioner's representative will note that all practice before the Office should be in writing, and the action of the Office will be based exclusively on the written record in the Office. See 37 C.F.R. §1.2. As such, Petitioner's representative is reminded that no telephone discussion may be controlling or considered authority for any further action(s) of Petitioner's representative.

UNITED STATES PATENT AND TRADEMARK OFFICE

COMMISSIONER FOR PATENTS
UNITED STATES PATENT AND TRADEMARK OFFICE
P.O. BOX 1450
ALEXANDRIA, VA 22313-1450
WWW.USPTO.GOV

Paper No. None

WHIRLPOOL PATENTS COMPANY - MD 0750
500 RENAISSANCE DRIVE - SUITE 102
ST. JOSEPH MI 49085

COPY MAILED

APR 30 2007

OFFICE OF PETITIONS

In re Application of Duane A. Schmidt, Allan R. Steinkuhl, and Joseph L. Coleman Application No. 29/252,075 Filed: January 18, 2006 Attorney Docket No. US20020314-4 Title: MODULAR DRAWERS	DECISION ON RENEWED PETITION UNDER 37 C.F.R. §1.47(A

This is in response to the renewed petition submitted on March 28, 2007, under 37 C.F.R. §1.47(a)[1].

On January 18, 2006, the application was deposited, identifying Duane A. Schmidt, Allan R. Steinkuhl, and Joseph L. Coleman as

---

1 A grantable petition under 37 C.F.R. §1.47(a) requires:
(1) the petition fee of $200;
(2) a surcharge of either $65 or $130 if the petition is not filed at the time of filing the application, as set forth in 37 CFR § 1.16(f);
(3) a statement of the last known address of the non-signing inventors;
(4) either
a) proof that a copy of the entire application (specification, claims, drawings, and the oath or declaration) was sent or given to the non-signing inventor for review and proof that the non-signing inventor refuses to join in the application or
b) proof that the non-signing inventor cannot be found or reached after diligent effort;
(5) a declaration which complies with 37 C.F.R. §1.63.

joint inventors. On August 23, 2006, applicant was mailed a Notice of Allowance and Issue Fee Due (notice), indicating that a substitute oath or declaration would be required.

The original petition was filed on September 29, 2006, and was dismissed via the mailing of a decision on February 2, 2007 for failing to meet requirements (3) and (4) of Rule §1.47(a).

With this renewed petition, Petitioner has corrected these deficiencies. Therefore, this renewed petition is **GRANTED** and this application is hereby accorded Rule §1.47(a) status.

Petitioner has submitted $200 with this renewed petition, however there is no fee associated with the filing of the same. Consequently, the fee will be refunded to Petitioner's Deposit Account, as authorized in the petition.

As provided in Rule §1.47, this Office will forward notice of this application's filing to the non-signing inventor at the address given on the declaration. Notice of the filing of this application will also be published in the Official Gazette.

The Office of Patent Publication will be notified of this decision so that the present application can be processed into a patent.

Telephone inquiries regarding *this decision* should be directed to the undersigned at (571) 272-3225[2]. All other inquiries concerning the status of the application should be directed to the Office of Patent Publication at 571-272-4200.

Paul Shanoski
Senior Attorney
Office of Petitions
United States Patent and Trademark Office

---

2 Petitioner will note that all practice before the Office should be in writing, and the action of the Office will be based exclusively on the written record in the Office. See 37 C.F.R. §1.2. As such, Petitioner is reminded that no telephone discussion may be controlling or considered authority for any further action(s) of Petitioner.

UNITED STATES PATENT AND TRADEMARK OFFICE

COMMISSIONER FOR PATENTS
UNITED STATES PATENT AND TRADEMARK OFFICE
P.O. BOX 1450
ALEXANDRIA, VA 22313-1450
WWW.USPTO.GOV

Duane A. Schmidt
P.O. Box 154
Madison, IN 47250

COPY MAILED

APR 30 2007

OFFICE OF PETITIONS

In re Application of	:	
Duane A. Schmidt, Allan R.	:	
Steinkuhl, and Joseph L.	:	
Coleman	:	
Application No. 29/252,075	:	LETTER
Filed: January 18, 2006	:	
Attorney Docket No. US20020314-4	:	
Title: MODULAR DRAWERS	:	

Dear Mr. Schmidt:

You are named a joint inventor in the above-identified United States patent application filed under the provisions of 35 U.S.C. 116 (United States Code) and 37 C.F.R. §1.47(a), Rules of Practice in Patent Cases. Should a patent be granted on the application, you will be designated therein as a joint inventor.

As a named inventor you are entitled to inspect any paper in the file wrapper of the application, order copies of all or any part thereof (at a prepaid cost per 37 C.F.R. §1.19) or make your position of record in the application. Alternatively, you may arrange to do any of the preceding through a registered patent attorney or agent presenting written authorization from you. If you care to join the application, the attorney of record below would presumably assist you. Joining in the application would entail the filing of an appropriate oath or declaration by you pursuant to 37 C.F.R. §1.63.

Telephone inquiries regarding this communication should be directed to the undersigned at (571) 272-3225. Requests for

information regarding your application should be directed to the File Information Unit at (703) 308-2733. Information regarding how to pay for and order a copy of the application, or a specific paper in the application, should be directed to the Certification Division at (703) 308-9726 or 1-800-972-6382 (outside the Washington D.C. area).

Paul Shanoski

Paul Shanoski
Senior Attorney
Office of Petitions
United States Patent and Trademark Office

cc: WHIRLPOOL PATENTS COMPANY - MD 0750
500 RENAISSANCE DRIVE - SUITE 102
ST. JOSEPH MI 49085

PTO/SB/27 (09-04)
Approved for use through 07/31/2006. OMB 0651-0031
U.S. Patent and Trademark Office; U.S DEPARTMENT OF COMMERCE
Under the Paperwork Reduction ACT of 1995, no persons are required to respond to collection of information unless it displays a valid OMB control number.

REQUEST FOR EXPEDITED EXAMINATION OF A DESIGN APPLICATION (37 CFR 1.155)

Application Number	UNASSIGNED
Filing Date	JANUARY 18, 2006
First Named Inventor	Philippe STARCK
Title	TOOTHBRUSH SANITIZER CAP
Atty Docket Number	ZAP-0007

ADDRESS TO:
MAIL STOP EXPEDITED DESIGN
COMMISSIONER FOR PATENTS
P.O. Box 1450
Alexandria, VA 22313-1450

Approved 2-1-06
Jacqueline M. Stone
Jacqueline M. Stone, Director
Technology Center 1700

113006 U.S. PTO
29/252097
011806

This is a request for expedited examination of a design application under 37 CFR 1.155.

NOTE: If the Request made by this form accompanies original application papers, include form PTO/SB/18 "Design Patent Application Transmittal" or its equivalent.

A preexamination search was conducted. The field of search was:

Cl D6; 524, 534, 526-528
Cl 206; 208-209.1, 228, 361, 362, 362.1, 362.2, 362.3
Cl 211; 13.1, 65-66, 70.6

Related applications: 29/186,588; 10/622,788; 60/400,775; ZAP-0006

If not previously filed for the above-identified application, the following items required by 37 CFR 1.155 are enclosed:

- Formal drawings (see 37 CFR 1.84). ✓
- The fee set forth in 37 CFR 1.17(k). – Check enclosed for $1115.00 including filing fee.
- An information disclosure statement in compliance with 37 CFR 1.98. ✓

Signature	1-18-2006 Date
Robert P. Bell Typed or printed name	39,546 Registration Number, if applicable
703-979-0757 Telephone Number	

WARNING: Information on this form may become public. Credit card information should not be included on this form. Provide credit card information and authorization on PTO-2038.

This collection of information is required by 37 CFR 1.155. The information is required to obtain or retain a benefit by the public which is to file (and by the USPTO to process) an application. Confidentiality is governed by 35 U.S.C. 122 and 37 CFR 1.11 and 1.14. This collection is estimated to take 6 minutes to complete, including gathering, preparing, and submitting the completed application form to the USPTO. Time will vary depending upon the individual case. Any comments on the amount of time you require to complete this form and/or suggestions for reducing this burden, should be sent to the Chief Information Officer, U.S. Patent and Trademark Office, U.S. Department of Commerce, P.O. Box 1450, Alexandria, VA 22313-1450. DO NOT SEND FEES OR COMPLETED FORMS TO THIS ADDRESS. SEND TO: Commissioner for Patents, P.O. Box 1450, Alexandria, VA 22313-1450.

If you need assistance in completing the form, call 1-800-PTO-9199 and select option 2.

01/20/2006 SSITHIB1 00000063 29252097
04 FC:1802 900.00 OP

PTO/SB/27 (05-03)
Approved for use through 04/30/2003. OMB 0651-0031
U.S. Patent and Trademark Office; U.S. DEPARTMENT OF COMMERCE
Under the Paperwork Reduction Act of 1995, no persons are required to respond to a collection of information unless it displays a valid OMB control number.

REQUEST FOR EXPEDITED EXAMINATION OF A DESIGN APPLICATION (37 CFR 1.155)

Application Number	TO BE ASSIGNED
Filing Date	January 19, 2006
First Named Inventor	Sean Michael McDowell
Title	Portion Of A Shoe Midsole
Atty Docket Number	015127.00649

113006 U.S. PTO
29/252108
011906

HAND DELIVER TO THE DESIGN GROUP DIRECTOR'S OFFICE
-or- ADDRESS TO:
MAIL STOP EXPEDITED DESIGN
COMMISSIONER FOR PATENTS
P.O. Box 1450
Alexandria, VA 22313-1450

Approved
Jacqueline M. Stone 2-1-06
Jacqueline M. Stone, Director
Technology Center 1700

This is a request for expedited examination of a design application under 37 CFR 1.155.

NOTE: If the Request made by this form accompanies original application papers, include form PTO/SB/18 "Design Patent Application Transmittal" or its equivalent.

A preexamination search was conducted. The field of search was:

D2/896, 902, 907, 908, 943, 944, 946, 964, 969, 972 and 977

Related applications: _____

If not previously filed for the above-identified application, the following items required by 37 CFR 1.155 are enclosed:

Formal drawings (see 37 CFR 1.84).

The fee set forth in 37 CFR 1.17(k).

An information disclosure statement in compliance with 37 CFR 1.98.

January 19, 2006
Date

David R Gerk
Signature

202-824-3000
Telephone Number

David R. Gerk-Registration No. 56,901
Typed or printed name

WARNING: Information on this form may become public. Credit card information should not be included on this form. Provide credit card information and authorization on PTO-2038.

This collection of information is required by 37 CFR 1.155. The information is required to obtain or retain a benefit by the public which is to file (and by the USPTO to process) an application. Confidentiality is governed by 35 U.S.C. 122 and 37 CFR 1.14. This collection is estimated to take 6 minutes to complete, including gathering, preparing, and submitting the completed application form to the USPTO. Time will vary depending upon the individual case. Any comments on the amount of time you require to complete this form and/or suggestions for reducing this burden, should be sent to the Chief Information Officer, U.S. Patent and Trademark Office, U.S. Department of Commerce, P.O. Box 1450, Alexandria, VA 22313-1450. DO NOT SEND FEES OR COMPLETED FORMS TO THIS ADDRESS. SEND TO: Mail Stop Expedited Design, Commissioner for Patents, P.O. Box 1450, Alexandria, VA 22313-1450.

If you need assistance in completing the form, call 1-800-PTO-9199 and select option 2.

01/20/2006 SSITHIB1 00000087 190733 29252108
04 FC:1802 900.00 DA

PTO/SB/27 (05-03)
Approved for use through 04/30/2003. OMB 0651-0031
U.S. Patent and Trademark Office; U.S. DEPARTMENT OF COMMERCE
Under the Paperwork Reduction Act of 1995, no persons are required to respond to a collection of information unless it displays a valid OMB control number.

REQUEST FOR EXPEDITED EXAMINATION OF A DESIGN APPLICATION (37 CFR 1.155)

Application Number	TO BE ASSIGNED
Filing Date	January 19, 2006
First Named Inventor	Sean Michael McDowell
Title	Portion Of A Shoe Upper
Atty Docket Number	015127.00650

113006 U.S.PTO
29/252109
011906

HAND DELIVER TO THE DESIGN GROUP DIRECTOR'S OFFICE
-or- ADDRESS TO:
MAIL STOP EXPEDITED DESIGN
COMMISSIONER FOR PATENTS
P.O. Box 1450
Alexandria, VA 22313-1450

This is a request for expedited examination of a design application under 37 CFR 1.155.

NOTE: If the Request made by this form accompanies original application papers, include form PTO/SB/18 "Design Patent Application Transmittal" or its equivalent.

Approved 2-14-06
Jacqueline M. Stone
Jacqueline M. Stone, Director
Technology Center 1700

A preexamination search was conducted. The field of search was:

D2/896, 902, 907, 908, 943, 944, 969, 972, 973 and 974

Related applications: _____

If not previously filed for the above-identified application, the following items required by 37 CFR 1.155 are enclosed:

Formal drawings (see 37 CFR 1.84).

The fee set forth in 37 CFR 1.17(k).

An information disclosure statement in compliance with 37 CFR 1.98.

January 19, 2006
Date

David R. Gerk
Signature

202-824-3000
Telephone Number

David R. Gerk-Registration No. 56,901
Typed or printed name

WARNING: Information on this form may become public. Credit card information should not be included on this form. Provide credit card information and authorization on PTO-2038.

This collection of information is required by 37 CFR 1.155. The information is required to obtain or retain a benefit by the public which is to file (and by the USPTO to process) an application. Confidentiality is governed by 35 U.S.C. 122 and 37 CFR 1.14. This collection is estimated to take 6 minutes to complete, including gathering, preparing, and submitting the completed application form to the USPTO. Time will vary depending upon the individual case. Any comments on the amount of time you require to complete this form and/or suggestions for reducing this burden, should be sent to the Chief Information Officer, U.S. Patent and Trademark Office, U.S. Department of Commerce, P.O. Box 1450, Alexandria, VA 22313-1450. DO NOT SEND FEES OR COMPLETED FORMS TO THIS ADDRESS. SEND TO: Mail Stop Expedited Design, Commissioner for Patents, P.O. Box 1450, Alexandria, VA 22313-1450.

If you need assistance in completing the form, call 1-800-PTO-9199 and select option 2.

/20/2006 SSITHIB1 00000088 190733 29252109
FC:1802 900.00 DA

UNITED STATES PATENT AND TRADEMARK OFFICE

Commissioner for Patents
United States Patent and Trademark Office
P.O. Box 1450
Alexandria, VA 22313-1450
www.uspto.gov

GALLAGHER & LATHROP, A PROFESSIONAL CORPORATION
601 CALIFORNIA ST.
SUITE 1111
SAN FRANCISCO, CA 94108

COPY MAILED

DEC 0 2 2008

OFFICE OF PETITIONS

In re Application of	:	
Bruce Robert Jackson	:	
Application No. 29/252,174	:	ON PETITION
Filed: January 18, 2006	:	
Attorney Docket No. DOL178	:	

This is a decision on the petition under 37 CFR 1.137(b), filed on October 14, 2008, to revive the above-identified application.

The instant petition is not signed by an attorney of record. However, in accordance with 37 CFR 1.34(a), the signature of Larry Mendenhall appearing on the petition shall constitute a representation to the United States Patent and Trademark Office that he is authorized to represent the particular party on whose behalf he acts.

Additionally, it is not apparent whether the statement of unintentional delay was signed by a person who would have been in a position of knowing that the entire delay in filing the required reply from the due date for the reply until the filing of a grantable petition pursuant to 37 CFR 1.137(b) was unintentional. Nevertheless, in accordance with 37 CFR 10.18, the statement is accepted as constituting a certification of unintentional delay. However, in the event that petitioner has no knowledge that the delay was unintentional, petitioner must make such an inquiry to ascertain that, in fact, the delay was unintentional. If petitioner discovers that the delay was intentional, petitioner must so notify the Office.

The application became abandoned for failure to timely respond to the Notice to File Corrected Application Papers mailed July 17, 2008. A Notice of Abandonment was mailed on September 26, 2008.

The petition satisfies the requirements of 37 CFR 1.137(b) in that petitioner has supplied (1) the reply in the form of two (2) sheets of replacement drawings containing Figures 2-6 and 8-12 and terminal disclaimer along with $140 fee; (2) the petition fee of $1,620; and (3) a proper statement of unintentional delay. Therefore, the petition is **GRANTED**.

The terminal disclaimer under 37 CFR 1.137(d), filed October 14, 2008, has been accepted and made of record. Any continuing application filed from this application must contain a copy of the terminal disclaimer. The copy of the terminal disclaimer must be filed with a cover letter requesting the terminal disclaimer be recorded on the continuing application. A copy of this decision should be attached to the cover letter.

This application file is being referred to the Office of Data Management to be processed into a patent.

Telephone inquiries concerning this decision should be directed to the undersigned at (571) 272-3226.

Andrea Smith
Petitions Examiner
Office of Petitions

UNITED STATES PATENT AND TRADEMARK OFFICE

Commissioner for Patents
United States Patent and Trademark Office
P.O. Box 1450
Alexandria, VA 22313-1450
www.uspto.gov

Morland C. Fischer
Suite 1050
2030 Main Street
Irvine CA 92614

COPY MAILED

JUN 19 2007

OFFICE OF PETITIONS

In re Application of	:	
Egger	:	
Application No. 29/252,272	:	DECISION ON PETITION
Filed: January 23, 2006	:	
Attorney Docket No. TSC-1004	:	

This is a decision on the petition under the unintentional provisions of 37 CFR 1.137(b), filed January 3, 2007 (certificate of mailing date December 28, 2006), to revive the above-identified application.

The petition is **GRANTED**.

The application became abandoned for failure to submit a corrected drawing in a timely manner in reply to the Notice of Allowability, mailed July 7, 2006, which set a period for reply of three (3) months. Accordingly, this application became abandoned on October 8, 2006. A Notice of Abandonment was mailed on December 7, 2006.

The petition satisfies the requirements of 37 CFR 1.137(b) in that petitioner has supplied (1) the reply in the form of a corrected drawing [filed on November 6, 2006 (certificate of mailing date November 2, 2006)], (2) the petition fee of $750.00; (3) a proper statement of unintentional delay, and (4) a terminal disclaimer accompanied by the required $65.00 fee.

It is not possible to purchase an extension of time when filing corrected drawings in response to a Notice of Allowability. Therefore, the $60.00 extension of time fee submitted with the corrected drawing on November 6, 2006(certificate of mailing date November 2, 2006) will be credited to petitioner's deposit account.

Telephone inquiries concerning this decision should be directed to the undersigned at (571) 272-3230.

This application is being referred to Publishing Division for processing into a patent.

Shirene Willis Brantley
Senior Petitions Attorney
Office of Petitions

UNITED STATES PATENT AND TRADEMARK OFFICE

Commissioner for Patents
United States Patent and Trademark Office
P.O. Box 1450
Alexandria, VA 22313-1450
www.uspto.gov

KARSTEN MANUFACTURING CORPORATION
LEGAL DEPARTMENT
2201 WEST DESERT COVE
PHOENIX AZ 85029

COPY MAILED

AUG 28 2007

OFFICE OF PETITIONS

In re Application of	:	
James WELLS	:	
Application No. 29/252,278	:	DECISION ON PETITION
Filed: January 18, 2006	:	
Attorney Docket No. KMC-686	:	

This is a decision on the petition under 37 CFR 1.137(b), filed March 28, 2007, to revive the above-identified design application.

The petition is **GRANTED**.

The application became abandoned for failure to timely pay the issue fee on or before October 31, 2006, as required by the Notice of Allowance and Fee(s) Due, mailed July 31, 2006, which set a statutory period for reply of three (3) months. Accordingly, the application became abandoned on November 01, 2006. A Notice of Abandonment was mailed on January 26, 2007.

The petition satisfies the requirements of 37 CFR 1.137(b) in that petitioner has supplied (1) the reply in the form of the $800 issue fee, (2) the petition fee of $1500, (3) a proper statement of unintentional delay, and (4) a terminal disclaimer and fee as required by 37 CFR 1.137(d). Accordingly, the failure to timely pay the issue fee as required by the Notice of Allowance and Fee(s) is accepted as being unintentionally delayed.

The terminal disclaimer is accepted and has been made of record. Any continuing application filed from this application must contain a copy of the terminal disclaimer. The copy of the terminal disclaimer must be filed with a cover letter requesting the terminal disclaimer be

recorded on the continuing application. A copy of this decision should be attached to the cover letter.

Telephone inquiries concerning this decision should be directed to Tredelle Jackson at (571) 272-2783.

This application is being referred to Publishing Division for further processing in accordance with this decision on petition.

Amelia Au
Petitions Examiner
Office of Petitions

UNITED STATES PATENT AND TRADEMARK OFFICE

Commissioner for Patents
United States Patent and Trademark Office
P.O. Box 1450
Alexandria, VA 22313-1450
www.uspto.gov

EDWIN TARVER
16830 VENTURA BLVD.
SUITE 360
ENCINO, CA 9143

COPY MAILED

MAY 3 1 2007

OFFICE OF PETITIONS

In re Application of	:	
Frias, Alberto	:	
Application No. 29/252,339	:	ON PETITION
Filed: January 19, 2006	:	
Attorney Docket No. 22193-001	:	

This is a decision on the petition under 37 C.F.R. § 1.137(b), filed April 2, 2007, to revive the above-identified application.

The petition is **DISMISSED**.

Any request for reconsideration must be submitted within TWO (2) MONTHS from the mail date of this decision. No further petition fee is required for the request. Extensions of time under 37 CFR 1.136(a) are permitted. The reconsideration request should include a cover letter entitled "Renewed Petition under 37 CFR 1.137(b)." This is **not** a final agency action within the meaning of 5 U.S.C. § 704.

A grantable petition under 37 CFR 1.137(b) must be accompanied by:
(1) the required reply,[1]
(2) the petition fee,
(3) a statement that the entire delay in filing the required reply from the due date for the reply until the filing of a grantable petition pursuant to 37 CFR 1.137(b) was unintentional, and
(4) a terminal disclaimer and fee if the application was filed on or before June 8, 1995 or if the application is a design application.

Where there is a question as to whether either the abandonment or the delay in filing a petition under 37 CFR 1.137 was unintentional, the Commissioner may require additional information.[2]

The instant petition lacks item (4). Since the instant application is a design application, a terminal disclaimer and fee is required under 37 CFR 1.137(b). A blank terminal disclaimer form is enclosed for petitioner's convenience.

Further correspondence with respect to this matter should be addressed as follows:

---

[1] In a nonprovisional application abandoned for failure to prosecute, the required reply may be met by the filing of a continuing application. In an application or patent, abandoned or lapsed for failure to pay the issue fee or any portion thereof, the required reply must be the payment of the issue fee or any outstanding balance thereof.

[2] See MPEP 711.03(c)(III)(C) and (D).

By mail: Mail Stop PETITIONS
Commissioner for Patents
Post Office Box 1450
Alexandria, VA 22313-1450

By hand: Customer Window located at:

U.S. Patent and Trademark Office
Customer Service Window Randolph Building
401 Dulany Street
Alexandria, VA 22314

By fax: (571) 273-8300
ATTN: Office of Petitions

Any questions concerning this matter may be directed to the undersigned at (571) 272-3206.

Liana Walsh
Petitions Examiner
Office of Petitions

Enclosure: PTO/SB/63

PTO/SB/63 (04-07)
Approved for use through 09/30/2007. OMB 0651-0031
U.S. Patent and Trademark Office; U.S. DEPARTMENT OF COMMERCE
Under the Paperwork Reduction Act of 1995, no persons are required to a collection of information unless it displays a valid OMB control number.

TERMINAL DISCLAIMER TO ACCOMPANY PETITION

Docket Number (Optional)

In re Application of:

Name:

Application Number:

Filed:

For:

The owner*, _____ of _____ percent interest in the above-identified application hereby disclaims a terminal part of the term of any patent granted the above-identified application equivalent to: (1) if the above-identified application is a design application, the period of abandonment of the above-identified application, and (2) if the above-identified application is a utility or plant application, the lesser of: (a) the period of abandonment of the application; or (b) the period extending beyond twenty years from the date on which the above-identified application was filed in the United States or, if the application contains a specific reference to an earlier filed application(s) under 35 U.S.C. 120, 121, or 365(c), from the date on which the earliest such application was filed. This disclaimer also applies to any patent granted on a utility or plant application filed before June 8, 1995, or a design application, that contains a specific reference under 35 U.S.C. 120, 121, or 365(c) to the above-identified application. This disclaimer is binding upon the grantee, and its successors or assigns.

Check either box 1 or 2 below, if appropriate.

1. ☐ For submissions on behalf of an organization (e.g., corporation, partnership, university, government agency, etc.), the undersigned is empowered to act on behalf of the organization.
2. ☐ The undersigned is an attorney or agent of record. Registration Number_____.

Signature	Date
Typed or Printed Name	Telephone Number

☐ Terminal disclaimer fee under 37 CFR 1.20(d) included.

WARNING: Information on this form may become public. Credit card information should not be included on this form. Provide credit card information and authorization on PTO-2038.

* Statement under 37 CFR 3.73(b) is required if terminal disclaimer is signed by the assignee (owner). Form PTO/SB/96 may be used for making this certification. See MPEP § 324.

This collection of information is required by 37 CFR 1.137. The information is required to obtain or retain a benefit by the public which is to file (and by the USPTO to process) an application. Confidentiality is governed by 35 U.S.C. 122 and 37 CFR 1.11 and 1.14. This collection is estimated to take 12 minutes to complete, including gathering, preparing, and submitting the completed application form to the USPTO. Time will vary depending upon the individual case. Any comments on the amount of time you require to complete this form and/or suggestions for reducing this burden, should be sent to the Chief Information Officer, U.S. Patent and Trademark Office, U.S. Department of Commerce, P.O. Box 1450, Alexandria, VA 22313-1450. DO NOT SEND FEES OR COMPLETED FORMS TO THIS ADDRESS. SEND TO: **Commissioner for Patents, P.O. Box 1450, Alexandria, VA 22313-1450.**

If you need assistance in completing the form, call 1-800-PTO-9199 and select option 2.

Privacy Act Statement

The **Privacy Act of 1974 (P.L. 93-579)** requires that you be given certain information in connection with your submission of the attached form related to a patent application or patent. Accordingly, pursuant to the requirements of the Act, please be advised that: (1) the general authority for the collection of this information is 35 U.S.C. 2(b)(2); (2) furnishing of the information solicited is voluntary; and (3) the principal purpose for which the information is used by the U.S. Patent and Trademark Office is to process and/or examine your submission related to a patent application or patent. If you do not furnish the requested information, the U.S. Patent and Trademark Office may not be able to process and/or examine your submission, which may result in termination of proceedings or abandonment of the application or expiration of the patent.

The information provided by you in this form will be subject to the following routine uses:

1. The information on this form will be treated confidentially to the extent allowed under the Freedom of Information Act (5 U.S.C. 552) and the Privacy Act (5 U.S.C 552a). Records from this system of records may be disclosed to the Department of Justice to determine whether disclosure of these records is required by the Freedom of Information Act.
2. A record from this system of records may be disclosed, as a routine use, in the course of presenting evidence to a court, magistrate, or administrative tribunal, including disclosures to opposing counsel in the course of settlement negotiations.
3. A record in this system of records may be disclosed, as a routine use, to a Member of Congress submitting a request involving an individual, to whom the record pertains, when the individual has requested assistance from the Member with respect to the subject matter of the record.
4. A record in this system of records may be disclosed, as a routine use, to a contractor of the Agency having need for the information in order to perform a contract. Recipients of information shall be required to comply with the requirements of the Privacy Act of 1974, as amended, pursuant to 5 U.S.C. 552a(m).
5. A record related to an International Application filed under the Patent Cooperation Treaty in this system of records may be disclosed, as a routine use, to the International Bureau of the World Intellectual Property Organization, pursuant to the Patent Cooperation Treaty.
6. A record in this system of records may be disclosed, as a routine use, to another federal agency for purposes of National Security review (35 U.S.C. 181) and for review pursuant to the Atomic Energy Act (42 U.S.C. 218(c)).
7. A record from this system of records may be disclosed, as a routine use, to the Administrator, General Services, or his/her designee, during an inspection of records conducted by GSA as part of that agency's responsibility to recommend improvements in records management practices and programs, under authority of 44 U.S.C. 2904 and 2906. Such disclosure shall be made in accordance with the GSA regulations governing inspection of records for this purpose, and any other relevant (*i.e.*, GSA or Commerce) directive. Such disclosure shall not be used to make determinations about individuals.
8. A record from this system of records may be disclosed, as a routine use, to the public after either publication of the application pursuant to 35 U.S.C. 122(b) or issuance of a patent pursuant to 35 U.S.C. 151. Further, a record may be disclosed, subject to the limitations of 37 CFR 1.14, as a routine use, to the public if the record was filed in an application which became abandoned or in which the proceedings were terminated and which application is referenced by either a published application, an application open to public inspection or an issued patent.
9. A record from this system of records may be disclosed, as a routine use, to a Federal, State, or local law enforcement agency, if the USPTO becomes aware of a violation or potential violation of law or regulation.

UNITED STATES PATENT AND TRADEMARK OFFICE

Commissioner for Patents
United States Patent and Trademark Office
P.O. Box 1450
Alexandria, VA 22313-1450
www.uspto.gov

EDWIN TARVER
16830 VENTURA BLVD.
SUITE 360
ENCINO, CA 91436

COPY MAILED

SEP 17 2007

OFFICE OF PETITIONS

In re Application of	:	
Frias, Alberto	:	
Application No. 29/252,339	:	ON PETITION
Filed: January 19, 2006	:	
Attorney Docket No. 22193-001	:	

This is a decision on the renewed petition under 37 C.F.R. § 1.137(b), filed June 20, 2007, to revive the above-identified application.

The petition is **GRANTED.**

The terminal disclaimer and fee have now been received.

This matter is being referred to the Publishing Division for processing into a patent.

Telephone inquiries regarding this decision should be directed to the undersigned at (571) 272-3206.

Liana Walsh
Petitions Examiner
Office of Petitions

UNITED STATES PATENT AND TRADEMARK OFFICE

Commissioner for Patents
United States Patent and Trademark Office
P.O. Box 1450
Alexandria, VA 22313-1450
www.uspto.gov

COPY MAILED

MAY 18 2006

OFFICE OF PETITIONS

ROSENBERG, KLEIN & LEE
3458 ELLICOTT CENTER DRIVE-SUITE 101
ELLICOTT CITY, MD 21043

In re Application of :
Yang-Yuan Hsu :
Application No.29/252,354 :
Filed: January 23, 2006 :
Attorney Docket No. MR1957-1201 :

DECISION GRANTING PETITION

This is a decision on the petition filed February 23, 2006, requesting that the above-identified application retain a filing date of January 23, 2006, with the five sheets of drawings filed on that date as part of the original disclosure.

On January 23, 2006, the above-identified application was filed. On February 16, 2006, the Office of Initial Patent Examination mailed a "Notice of Omitted Items in Nonprovisional Application" (the "Notice"), stating that the application had been accorded a filing date, but that Figures 4-7, as described in the specification, appeared to have been omitted. The Notice allowed a non-extendable two-month period for reply beginning from the mailing date of the Notice.

In response, on February 23, 2006, applicants filed the present petition and a copy of an Office date-stamped postcard showing that, among other items, five sheets of drawings was received on January 23, 2006.

Upon review of the record, only three sheets of drawings were found among the application papers. The evidence is convincing, however, that five sheets of drawings accompanied the application papers on January 23, 2006. Therefore, the application, including the five sheets of drawings was complete on filing and entitled to a filing date of January 23, 2006.

Accordingly, the petition is granted; the Notice is vacated, accordingly.

The application file is being returned to the Office of Initial Patent Examination for further processing with a filing date of January 23, 2006, including the five sheets of drawings filed on that date.

Any inquiries related to this decision should be directed to the undersigned at (571) 272-3222.

Kenya A. McLaughlin
Petitions Attorney
Office of Petitions

UNITED STATES PATENT AND TRADEMARK OFFICE

COMMISSIONER FOR PATENTS
UNITED STATES PATENT AND TRADEMARK OFFICE
P.O. BOX 1450
ALEXANDRIA, VA 22313-1450
WWW.USPTO.GOV

Paper No. None

COPY MAILED

FEB 02 2007

OFFICE OF PETITIONS

WHIRLPOOL PATENTS COMPANY - MD 0750
500 RENAISSANCE DRIVE - SUITE 102
ST. JOSEPH MI 49085

In re Application of Duane A. Schmidt, Allan R. Steinkuhl, and Joseph L. Coleman Application No. 29/252,360 Filed: January 20, 2006 Attorney Docket No. US20020319-4 Title: STORAGE CABINET	DECISION ON PETITION UNDER 37 C.F.R. §1.47(A)

This is in response to the petition submitted on October 4, 2006, under 37 C.F.R. §1.47(a)[1].

On January 20, 2006, the application was deposited, identifying Duane A. Schmidt, Allan R. Steinkuhl, and Joseph L. Coleman as

---

1 A grantable petition under 37 C.F.R. §1.47(a) requires:
(1) the petition fee of $200;
(2) a surcharge of either $65 or $130 if the petition is not filed at the time of filing the application, as set forth in 37 CFR § 1.16(f);
(3) a statement of the last known address of the non-signing inventors;
(4) either
a) proof that a copy of the entire application (specification, claims, drawings, and the oath or declaration) was sent or given to the non-signing inventor for review and proof that the non-signing inventor refuses to join in the application or
b) proof that the non-signing inventor cannot be found or reached after diligent effort;
(5) a declaration which complies with 37 C.F.R. §1.63.

joint inventors. On August 23, 2006, applicant was mailed a Notice of Allowance and Issue Fee Due (notice), indicating that a substitute oath or declaration would be required.

With the present petition, Petitioner's representative has submitted the petition fee, the associated surcharge, and a declaration that has been executed by each of the joint inventors save Mr. Schmidt. Petitioner's representative has met requirements (1), (2), and (5) of Rule §1.47(a). The second requirement is not applicable.

Regarding the third requirement of Rule §1.47(a), Petitioner's representative has failed to include a statement of the last known address of the non-signing inventor[2].

Regarding the fourth requirement of Rule §1.47(a), it does not appear that Petitioner's representative has sent a complete copy of the application to the non-signing inventor. Petitioner's representative has indicated that Mr. Schmidt signed the original declaration. It is noted that Mr. Schmidt signed this declaration on February 5, 2003, and that he orally refused to execute the substitute declaration on June 20, 2006.

While it is possible that Mr. Schmidt retains a copy of the application that was provided to him more than three years prior, it is equally possible that he has since disposed of it or misplaced it. Furthermore, it does not appear that the declaration that Mr. Schmidt has executed is associated with the present application. As such, Petitioner's representative has shown that a complete copy of the application was *not* provided to the non-signing inventor recently, for his review.

A refusal by an inventor to sign an oath or declaration when the inventor has not been presented with the application papers does not itself suggest that the inventor is refusing to join the application unless it is clear that the inventor understands exactly what he or she is being asked to sign and refuses to accept the application papers. It is reasonable to require that the inventor be presented with the application papers before a petition under 37 C.F.R. §1.47 is granted since such a procedure ensures that the inventor is apprised of the application to which the oath or declaration is directed[3].

As such, this petition under 37 C.F.R. §1.47(a) must be **DISMISSED.**

---

2 See MPEP 409.03(e).
3 In re Gray, 115 USPQ 80 (Comm'r Pat. 1956).

Any reply must be submitted within **TWO MONTHS** from the mail date of this decision. Extensions of time under 37 C.F.R. §1.136(a) are permitted. The reply should include a cover letter entitled "Renewed Petition Under 37 C.F.R. §1.47(a)". This is not a final agency action within the meaning of 5 U.S.C 704.

The renewed petition should indicate in a prominent manner that the attorney handling this matter is Paul Shanoski, and may be submitted by mail[4], hand-delivery[5], or facsimile[6].

If responding by mail, Petitioner's representative is advised not to place the undersigned's name on the envelope. Only the information that appears in the footnote should be included - adding anything else to the address will delay the delivery of the response to the undersigned.

Telephone inquiries regarding *this decision* should be directed to the undersigned at (571) 272-3225[7]. All other inquiries concerning examination procedures or status of the application should be directed to the Technology Center.

Paul Shanoski
Senior Attorney
Office of Petitions
United States Patent and Trademark Office

---

4 Mail Stop Petition, Commissioner for Patents, United States Patent and Trademark Office, P.O. Box 1450, Alexandria, VA, 22313-1450.
5 Customer Window, Randolph Building, 401 Dulaney Street, Alexandria, VA, 22314.
6 (571) 273-8300- please note this is a central facsimile number.
7 Petitioner's representative will note that all practice before the Office should be in writing, and the action of the Office will be based exclusively on the written record in the Office. See 37 C.F.R. §1.2. As such, Petitioner's representative is reminded that no telephone discussion may be controlling or considered authority for any further action(s) of Petitioner's representative.

UNITED STATES PATENT AND TRADEMARK OFFICE

COMMISSIONER FOR PATENTS
UNITED STATES PATENT AND TRADEMARK OFFICE
P.O. BOX 1450
ALEXANDRIA, VA 22313-1450
WWW.USPTO.GOV

Paper No. None

COPY MAILED

JUN 07 2007

OFFICE OF PETITIONS

WHIRLPOOL PATENTS COMPANY - MD 0750
500 RENAISSANCE DRIVE - SUITE 102
ST. JOSEPH MI 49085

In re Application of Duane A. Schmidt, Allan R. Steinkuhl, and Joseph L. Coleman Application No. 29/252,360 Filed: January 20, 2006 Attorney Docket No. US20020319-4 Title: STORAGE CABINET	DECISION ON RENEWED PETITION UNDER 37 C.F.R. §1.47(A)

This is in response to the renewed petition submitted on March 28, 2007, under 37 C.F.R. §1.47(a)[1].

On January 20, 2006, the application was deposited, identifying Duane A. Schmidt, Allan R. Steinkuhl, and Joseph L. Coleman as

---

1 A grantable petition under 37 C.F.R. §1.47(a) requires:
(1) the petition fee of $200;
(2) a surcharge of either $65 or $130 if the petition is not filed at the time of filing the application, as set forth in 37 C.F.R. § 1.16(f);
(3) a statement of the last known address of the non-signing inventors;
(4) either
a) proof that a copy of the entire application (specification, claims, drawings, and the oath or declaration) was sent or given to the non-signing inventor for review and proof that the non-signing inventor refuses to join in the application or
b) proof that the non-signing inventor cannot be found or reached after diligent effort;
(5) a declaration which complies with 37 C.F.R. §1.63.

joint inventors. On August 23, 2006, applicant was mailed a Notice of Allowance and Issue Fee Due (notice), indicating that a substitute oath or declaration would be required.

The original petition was filed on October 4, 2006, and was dismissed via the mailing of a decision on February 2, 2007 for failing to meet requirements (3) and (4) of Rule §1.47(a).

With this renewed petition, Petitioner has corrected these deficiencies. Therefore, this renewed petition is **GRANTED** and this application is hereby accorded Rule §1.47(a) status.

Petitioner has submitted $200 with this renewed petition, however there is no fee associated with the filing of the same. Consequently, the fee will be refunded to Petitioner's Deposit Account, as authorized in the petition.

As provided in Rule §1.47, this Office will forward notice of this application's filing to the non-signing inventor at the address given on the declaration. Notice of the filing of this application will also be published in the Official Gazette.

The Office of Patent Publication will be notified of this decision so that the present application can be processed into a patent.

Telephone inquiries regarding *this decision* should be directed to the undersigned at (571) 272-3225[2]. All other inquiries concerning the status of the application should be directed to the Office of Patent Publication at 571-272-4200.

Paul Shanoski
Senior Attorney
Office of Petitions
United States Patent and Trademark Office

---

2 Petitioner will note that all practice before the Office should be in writing, and the action of the Office will be based exclusively on the written record in the Office. See 37 C.F.R. §1.2. As such, Petitioner is reminded that no telephone discussion may be controlling or considered authority for any further action(s) of Petitioner.

UNITED STATES PATENT AND TRADEMARK OFFICE

COMMISSIONER FOR PATENTS
UNITED STATES PATENT AND TRADEMARK OFFICE
P.O. BOX 1450
ALEXANDRIA, VA 22313-1450
WWW.USPTO.GOV

Duane A. Schmidt
P.O. Box 154
Madison, IN 47250

COPY MAILED

JUN 07 2007

OFFICE OF PETITIONS

In re Application of	:	
Duane A. Schmidt, Allan R.	:	
Steinkuhl, and Joseph L.	:	
Coleman	:	
Application No. 29/252,360	:	LETTER
Filed: January 20, 2006	:	
Attorney Docket No. US20020319-4	:	
Title: STORAGE CABINET	:	

Dear Mr. Schmidt:

You are named a joint inventor in the above-identified United States patent application filed under the provisions of 35 U.S.C. 116 (United States Code) and 37 C.F.R. §1.47(a), Rules of Practice in Patent Cases. Should a patent be granted on the application, you will be designated therein as a joint inventor.

As a named inventor you are entitled to inspect any paper in the file wrapper of the application, order copies of all or any part thereof (at a prepaid cost per 37 C.F.R. §1.19) or make your position of record in the application. Alternatively, you may arrange to do any of the preceding through a registered patent attorney or agent presenting written authorization from you. If you care to join the application, the attorney of record below would presumably assist you. Joining in the application would entail the filing of an appropriate oath or declaration by you pursuant to 37 C.F.R. §1.63.

Telephone inquiries regarding this communication should be directed to the undersigned at (571) 272-3225. Requests for information regarding your application should be directed to the File Information Unit at (703) 308-2733. Information regarding how to pay for and order a copy of the application, or a specific paper in the application, should be directed to the Certification Division at (703) 308-9726 or 1-800-972-6382 (outside the Washington D.C. area).

Paul Shanoski
Senior Attorney
Office of Petitions
United States Patent and Trademark Office

cc: WHIRLPOOL PATENTS COMPANY - MD 0750
500 RENAISSANCE DRIVE - SUITE 102
ST. JOSEPH MI 49085

UNITED STATES PATENT AND TRADEMARK OFFICE

COMMISSIONER FOR PATENTS
UNITED STATES PATENT AND TRADEMARK OFFICE
P.O. BOX 1450
ALEXANDRIA, VA 22313-1450
WWW.USPTO.GOV

Paper No. None

COPY MAILED
FEB 02 2007
OFFICE OF PETITIONS

WHIRLPOOL PATENTS COMPANY - MD 0750
500 RENAISSANCE DRIVE - SUITE 102
ST. JOSEPH MI 49085

In re Application of Duane A. Schmidt, Allan R. Steinkuhl, and Joseph L. Coleman Application No. 29/252,361 Filed: January 20, 2006 Attorney Docket No. US20020315-5 Title: MODULAR CABINET	DECISION ON PETITION UNDER 37 C.F.R. §1.47(A)

This is in response to the petition submitted on September 29, 2006, under 37 C.F.R. §1.47(a)[1].

On January 20, 2006, the application was deposited, identifying Duane A. Schmidt, Allan R. Steinkuhl, and Joseph L. Coleman as

---

1 A grantable petition under 37 C.F.R. §1.47(a) requires:
(1) the petition fee of $200;
(2) a surcharge of either $65 or $130 if the petition is not filed at the time of filing the application, as set forth in 37 CFR § 1.16(f);
(3) a statement of the last known address of the non-signing inventors;
(4) either
a) proof that a copy of the entire application (specification, claims, drawings, and the oath or declaration) was sent or given to the non-signing inventor for review and proof that the non-signing inventor refuses to join in the application or
b) proof that the non-signing inventor cannot be found or reached after diligent effort;
(5) a declaration which complies with 37 C.F.R. §1.63.

joint inventors. On August 28, 2006, applicant was mailed a Notice of Allowance and Issue Fee Due (notice), indicating that a substitute oath or declaration would be required.

With the present petition, Petitioner's representative has submitted the petition fee, the associated surcharge, and a declaration that has been executed by each of the joint inventors save Mr. Schmidt. Petitioner's representative has met requirements (1), (2), and (5) of Rule §1.47(a). The second requirement is not applicable.

Regarding the third requirement of Rule §1.47(a), Petitioner's representative has failed to include a statement of the last known address of the non-signing inventor[2].

Regarding the fourth requirement of Rule §1.47(a), it does not appear that Petitioner's representative has sent a complete copy of the application to the non-signing inventor. Petitioner's representative has indicated that Mr. Schmidt signed the original declaration. It is noted that Mr. Schmidt signed this declaration on February 5, 2003, and that he orally refused to execute the substitute declaration on June 20, 2006.

While it is possible that Mr. Schmidt retains a copy of the application that was provided to him more than three years prior, it is equally possible that he has since disposed of it or misplaced it. Furthermore, it does not appear that the declaration that Mr. Schmidt has executed is associated with the present application. As such, Petitioner's representative has shown that a complete copy of the application was *not* provided to the non-signing inventor recently, for his review.

A refusal by an inventor to sign an oath or declaration when the inventor has not been presented with the application papers does not itself suggest that the inventor is refusing to join the application unless it is clear that the inventor understands exactly what he or she is being asked to sign and refuses to accept the application papers. It is reasonable to require that the inventor be presented with the application papers before a petition under 37 C.F.R. §1.47 is granted since such a procedure ensures that the inventor is apprised of the application to which the oath or declaration is directed[3].

As such, this petition under 37 C.F.R. §1.47(a) must be **DISMISSED.**

---

2 See MPEP 409.03(e).
3 In re Gray, 115 USPQ 80 (Comm'r Pat. 1956).

Any reply must be submitted within **TWO MONTHS** from the mail date of this decision. Extensions of time under 37 C.F.R. §1.136(a) are permitted. The reply should include a cover letter entitled "Renewed Petition Under 37 C.F.R. §1.47(a)". This is not a final agency action within the meaning of 5 U.S.C 704.

The renewed petition should indicate in a prominent manner that the attorney handling this matter is Paul Shanoski, and may be submitted by mail[4], hand-delivery[5], or facsimile[6].

If responding by mail, Petitioner's representative is advised not to place the undersigned's name on the envelope. Only the information that appears in the footnote should be included - adding anything else to the address will delay the delivery of the response to the undersigned.

Telephone inquiries regarding *this decision* should be directed to the undersigned at (571) 272-3225[7]. All other inquiries concerning examination procedures or status of the application should be directed to the Technology Center.

Paul Shanoski
Senior Attorney
Office of Petitions
United States Patent and Trademark Office

---

4 Mail Stop Petition, Commissioner for Patents, United States Patent and Trademark Office, P.O. Box 1450, Alexandria, VA, 22313-1450.
5 Customer Window, Randolph Building, 401 Dulaney Street, Alexandria, VA, 22314.
6 (571) 273-8300- please note this is a central facsimile number.
7 Petitioner's representative will note that all practice before the Office should be in writing, and the action of the Office will be based exclusively on the written record in the Office. See 37 C.F.R. §1.2. As such, Petitioner's representative is reminded that no telephone discussion may be controlling or considered authority for any further action(s) of Petitioner's representative.

UNITED STATES PATENT AND TRADEMARK OFFICE

COMMISSIONER FOR PATENTS
UNITED STATES PATENT AND TRADEMARK OFFICE
P.O. BOX 1450
ALEXANDRIA, VA 22313-1450
WWW.USPTO.GOV

Paper No. None

WHIRLPOOL PATENTS COMPANY - MD 0750
500 RENAISSANCE DRIVE - SUITE 102
ST. JOSEPH MI 49085

COPY MAILED

APR 30 2007

OFFICE OF PETITIONS

In re Application of
Duane A. Schmidt, Allan R. Steinkuhl, and Joseph L. Coleman
Application No. 29/252,361
Filed: January 20, 2006
Attorney Docket No. US20020315-5
Title: MODULAR CABINET

DECISION ON RENEWED PETITION UNDER 37 C.F.R. §1.47(A)

This is in response to the renewed petition submitted on March 28, 2007, under 37 C.F.R. §1.47(a)[1].

On January 20, 2006, the application was deposited, identifying Duane A. Schmidt, Allan R. Steinkuhl, and Joseph L. Coleman as

---

1 A grantable petition under 37 C.F.R. §1.47(a) requires:
(1) the petition fee of $200;
(2) a surcharge of either $65 or $130 if the petition is not filed at the time of filing the application, as set forth in 37 CFR § 1.16(f);
(3) a statement of the last known address of the non-signing inventors;
(4) either
a) proof that a copy of the entire application (specification, claims, drawings, and the oath or declaration) was sent or given to the non-signing inventor for review and proof that the non-signing inventor refuses to join in the application or
b) proof that the non-signing inventor cannot be found or reached after diligent effort;
(5) a declaration which complies with 37 C.F.R. §1.63.

joint inventors. On August 28, 2006, applicant was mailed a Notice of Allowance and Issue Fee Due (notice), indicating that a substitute oath or declaration would be required.

The original petition was filed on September 29, 2006, and was dismissed via the mailing of a decision on February 2, 2007 for failing to meet requirements (3) and (4) of Rule §1.47(a).

With this renewed petition, Petitioner has corrected these deficiencies. Therefore, this renewed petition is **GRANTED** and this application is hereby accorded Rule §1.47(a) status.

Petitioner has submitted $200 with this renewed petition, however there is no fee associated with the filing of the same. Consequently, the fee will be refunded to Petitioner's Deposit Account, as authorized in the petition.

As provided in Rule §1.47, this Office will forward notice of this application's filing to the non-signing inventor at the address given on the declaration. Notice of the filing of this application will also be published in the Official Gazette.

The Office of Patent Publication will be notified of this decision so that the present application can be processed into a patent.

Telephone inquiries regarding *this decision* should be directed to the undersigned at (571) 272-3225[2]. All other inquiries concerning the status of the application should be directed to the Office of Patent Publication at 571-272-4200.

Paul Shanoski

Paul Shanoski
Senior Attorney
Office of Petitions
United States Patent and Trademark Office

---

2 Petitioner will note that all practice before the Office should be in writing, and the action of the Office will be based exclusively on the written record in the Office. See 37 C.F.R. §1.2. As such, Petitioner is reminded that no telephone discussion may be controlling or considered authority for any further action(s) of Petitioner.

UNITED STATES PATENT AND TRADEMARK OFFICE

COMMISSIONER FOR PATENTS
UNITED STATES PATENT AND TRADEMARK OFFICE
P.O. BOX 1450
ALEXANDRIA, VA 22313-1450
WWW.USPTO.GOV

Duane A. Schmidt
P.O. Box 154
Madison, IN 47250

COPY MAILED

APR 30 2007

OFFICE OF PETITIONS

In re Application of	:	
Duane A. Schmidt, Allan R.	:	
Steinkuhl, and Joseph L. Coleman	:	
Application No. 29/252,361	:	LETTER
Filed: January 20, 2006	:	
Attorney Docket No. US20020315-5	:	
Title: MODULAR CABINET	:	

Dear Mr. Schmidt:

You are named a joint inventor in the above-identified United States patent application filed under the provisions of 35 U.S.C. 116 (United States Code) and 37 C.F.R. §1.47(a), Rules of Practice in Patent Cases. Should a patent be granted on the application, you will be designated therein as a joint inventor.

As a named inventor you are entitled to inspect any paper in the file wrapper of the application, order copies of all or any part thereof (at a prepaid cost per 37 C.F.R. §1.19) or make your position of record in the application. Alternatively, you may arrange to do any of the preceding through a registered patent attorney or agent presenting written authorization from you. If you care to join the application, the attorney of record below would presumably assist you. Joining in the application would entail the filing of an appropriate oath or declaration by you pursuant to 37 C.F.R. §1.63.

Telephone inquiries regarding this communication should be directed to the undersigned at (571) 272-3225. Requests for information regarding your application should be directed to the File Information Unit at (703) 308-2733. Information regarding

how to pay for and order a copy of the application, or a specific paper in the application, should be directed to the Certification Division at (703) 308-9726 or 1-800-972-6382 (outside the Washington D.C. area).

Paul Shanoski
Senior Attorney
Office of Petitions
United States Patent and Trademark Office

cc: WHIRLPOOL PATENTS COMPANY - MD 0750
500 RENAISSANCE DRIVE - SUITE 102
ST. JOSEPH MI 49085

UNITED STATES PATENT AND TRADEMARK OFFICE

Commissioner for Patents
United States Patent and Trademark Office
P.O. Box 1450
Alexandria, VA 22313-1450
www.uspto.gov

GALASSO & ASSOCIATES, LP
P.O. BOX 26503
AUSTIN, TX 78755-0503

MAILED

MAR 25 2009

OFFICE OF PETITIONS

In re Application of	:	
Roberto Miranda, et al.	:	
Application No. 29/252,431	:	DECISION ON PETITION
Filed: January 23, 2006	:	
Attorney Docket No. 1723.050435	:	

This is a decision on the petition, filed January 28, 2009, which is being treated as a petition under 37 CFR 1.8(b), requesting withdrawal of the holding of abandonment in the above-identified application.

The petition is **GRANTED**.

This application was held abandoned for failure to timely respond to the Office action of March 14, 2008, which set a three (3) month shortened statutory period for reply. Accordingly, a reply was due on or before June 14, 2008.

Petitioner states that a timely reply was mailed via certificate of mailing on June 13, 2008, which included an Amendment, Response and Replacement Sheet of Drawings. Petitioner has submitted a copy of the previously mailed correspondence, which bears a certificate of mailing dated June 13, 2008, which would have rendered the reply timely if received.

The file record does not include the originally submitted papers. Failure to receive correspondence which includes a certificate of mailing or certificate of facsimile transmission is addressed in 37 CFR 1.8(b), reproduced below:

> In the event that correspondence is considered timely filed by being mailed or transmitted in accordance with paragraph (a) of this section, but not received in the U.S. Patent and Trademark Office after a reasonable amount of time has elapsed from the time of mailing or transmitting of the correspondence, or after the application is held to be abandoned, or after the proceeding is dismissed, terminated, or decided with prejudice, the correspondence will be considered timely if the party who forwarded such correspondence:

(1) Informs the Office of the previous mailing or transmission of the correspondence promptly after becoming aware that the Office has no evidence of receipt of the correspondence;

(2) Supplies an additional copy of the previously mailed or transmitted correspondence and certificate; and

(3) Includes a statement which attests on a personal knowledge basis or to the satisfaction of the Director to the previous timely mailing or transmission. If the correspondence was sent by facsimile transmission, a copy of the sending unit's report confirming transmission may be used to support this statement.

The petition satisfies the above requirements of 37 CFR 1.8(b). Accordingly, the holding of abandonment for failure to timely file a reply to the Office action of March 14, 2008 is hereby withdrawn and the application restored to pending status.

The copy of the reply received with the petition will be accepted in place of the reply shown to have been mailed (or transmitted by facsimile) on June 13, 2008.

This application is being referred to Technology Center AU 2915 for appropriate action in the normal course of business on the reply received with petition.

Sherry D Brinkley
Petitions Examiner
Office of Petitions

PTO/SB/27 (05-03)
Approved for use through 04/30/2003. OMB 0651-0031
U.S. Patent and Trademark Office; U.S. DEPARTMENT OF COMMERCE
Under the Paperwork Reduction Act of 1995, no persons are required to respond to a collection of information unless it displays a valid OMB control number.

REQUEST FOR EXPEDITED EXAMINATION OF A DESIGN APPLICATION (37 CFR 1.155)

Application Number	TBD
Filing Date	Herewith
First Named Inventor	Scott PORTZLINE
Title	Portion Of A Shoe Midsole
Atty Docket Number	015127.00675

29/252460
012406

HAND DELIVER TO THE DESIGN GROUP DIRECTOR'S OFFICE
-or- ADDRESS TO:
MAIL STOP EXPEDITED DESIGN
COMMISSIONER FOR PATENTS
P.O. Box 1450
Alexandria, VA 22313-1450

This is a request for expedited examination of a design application under 37 CFR 1.155.

NOTE: If the Request made by this form accompanies original application papers, include form PTO/SB/18 "Design Patent Application Transmittal" or its equivalent.

Approved 2-14-06
Jacqueline M. Stone
Jacqueline M. Stone, Director
Technology Center 1700

A preexamination search was conducted. The field of search was:

D2/ 896, 902, 907, 908, 943, 944, 946, 964, 969, 972, 977

Related applications: _____

If not previously filed for the above-identified application, the following items required by 37 CFR 1.155 are enclosed:

Formal drawings (see 37 CFR 1.84).

The fee set forth in 37 CFR 1.17(k).

An information disclosure statement in compliance with 37 CFR 1.98.

January 24, 2006	
Date	Signature
202-824-3000	H. Wayne Porter, Reg. No. 42,084
Telephone Number	Typed or printed name

WARNING: Information on this form may become public. Credit card information should not be included on this form. Provide credit card information and authorization on PTO-2038.

This collection of information is required by 37 CFR 1.155. The information is required to obtain or retain a benefit by the public which is to file (and by the USPTO to process) an application. Confidentiality is governed by 35 U.S.C. 122 and 37 CFR 1.14. This collection is estimated to take 6 minutes to complete, including gathering, preparing, and submitting the completed application form to the USPTO. Time will vary depending upon the individual case. Any comments on the amount of time you require to complete this form and/or suggestions for reducing this burden, should be sent to the Chief Information Officer, U.S. Patent and Trademark Office, U.S. Department of Commerce, P.O. Box 1450, Alexandria, VA 22313-1450. DO NOT SEND FEES OR COMPLETED FORMS TO THIS ADDRESS. SEND TO: **Mail Stop Expedited Design, Commissioner for Patents, P.O. Box 1450, Alexandria, VA 22313-1450.**

If you need assistance in completing the form, call 1-800-PTO-9199 and select option 2.

04 FC:1802 900.00 DA

PTO/SB/27 (05-03)
Approved for use through 04/30/2003. OMB 0651-0031
U.S. Patent and Trademark Office; U.S. DEPARTMENT OF COMMERCE
Under the Paperwork Reduction Act of 1995, no persons are required to respond to a collection of information unless it displays a valid OMB control number.

REQUEST FOR EXPEDITED EXAMINATION OF A DESIGN APPLICATION (37 CFR 1.155)

Application Number	TBD
Filing Date	Herewith
First Named Inventor	Kevin Fallon
Title	PORTION OF A SHOE UPPER
Atty Docket Number	015127.00860

29/252461 012406

HAND DELIVER TO THE DESIGN GROUP DIRECTOR'S OFFICE
-or- ADDRESS TO:
MAIL STOP EXPEDITED DESIGN
COMMISSIONER FOR PATENTS
P.O. Box 1450
Alexandria, VA 22313-1450

This is a request for expedited examination of a design application under 37 CFR 1.155.

NOTE: If the Request made by this form accompanies original application papers, include form PTO/SB/18 "Design Patent Application Transmittal" or its equivalent.

Approved 2-14-06
Jacqueline M. Stone
Jacqueline M. Stone, Director
Technology Center 1700

A preexamination search was conducted. The field of search was:

D2/ 896, 902, 907, 908, 943, 944, 969, 972, 973, and 974

Related applications: _____

If not previously filed for the above-identified application, the following items required by 37 CFR 1.155 are enclosed:

Formal drawings (see 37 CFR 1.84).

The fee set forth in 37 CFR 1.17(k).

An information disclosure statement in compliance with 37 CFR 1.98.

January 24, 2006
Date

Anthony W. Kandare
Signature

202-824-3000
Telephone Number

Anthony W. Kandare, Reg. No. 48,830
Typed or printed name

WARNING: Information on this form may become public. Credit card information should not be included on this form. Provide credit card information and authorization on PTO-2038.

This collection of information is required by 37 CFR 1.155. The information is required to obtain or retain a benefit by the public which is to file (and by the USPTO to process) an application. Confidentiality is governed by 35 U.S.C. 122 and 37 CFR 1.14. This collection is estimated to take 6 minutes to complete, including gathering, preparing, and submitting the completed application form to the USPTO. Time will vary depending upon the individual case. Any comments on the amount of time you require to complete this form and/or suggestions for reducing this burden, should be sent to the Chief Information Officer, U.S. Patent and Trademark Office, U.S. Department of Commerce, P.O. Box 1450, Alexandria, VA 22313-1450. DO NOT SEND FEES OR COMPLETED FORMS TO THIS ADDRESS. SEND TO: Mail Stop Expedited Design, Commissioner for Patents, P.O. Box 1450, Alexandria, VA 22313-1450.

If you need assistance in completing the form, call 1-800-PTO-9199 and select option 2.

04 FC:1802 900.00 DA

UNITED STATES PATENT AND TRADEMARK OFFICE

Commissioner for Patents
United States Patent and Trademark Office
P.O. Box 1450
Alexandria, VA 22313-1450
www.uspto.gov

GALASSO & ASSOCIATES, LP
P.O. BOX 26503
AUSTIN, TX 78755-0503

COPY MAILED

AUG 0 8 2007

OFFICE OF PETITIONS

ON PETITION

In re Application of
Michael A. Ignozzi
Application No. 29/252,480
Filed: January 23, 2006
Attorney Docket No.: 1723.050524

This is a decision on the petition filed March 19, 2007 under 37 CFR 1.137(b), [1] to revive the above-identified application.

The petition under 37 CFR 1.137 (b) is **DISMISSED**.

Any further petition to revive the above-identified application must be submitted within TWO (2) MONTHS from the mail date of this decision. Extensions of time under 37 CFR 1.136(b) are permitted. The reconsideration request should include a cover letter entitled "Petition under 37 CFR 1.137." This is **not** final agency action within the meaning of 5 U.S.C. § 704.

This application became abandoned April 28, 2006 for failure to timely respond to the Notice to File Missing Parts on or before April 27, 2006. The instant petition and this decision precede the mailing of the Notice of Abandonment.

The petition does not satisfy requirement (4) of the regulation.

---

[1] Effective December 1, 1997, the provisions of 37 CFR 1.137(b) now provide that where the delay in reply was unintentional, a petition may be filed to revive an abandoned application or a lapsed patent pursuant to 37 CFR 1.137(b). A grantable petition filed under the provisions of 37 CFR 1.137(b) must be accompanied by:

(1) the required reply, unless previously filed. In a nonprovisional application abandoned for failure to prosecute, the required reply may be met by the filing of a continuing application. In a nonprovisional application filed on or after June 8, 1995, and abandoned for failure to prosecute, the required reply may also be met by the filing of a request for continued examination in compliance with § 1.114. In an application or patent, abandoned or lapsed for failure to pay the issue fee or any portion thereof, the required reply must be the payment of the issue fee or any outstanding balance thereof.

(2) the petition fee as set forth in 37 CFR 1.17(m);

(3) a statement that the entire delay in filing the required reply from the due date for the reply until the filing of a grantable petition pursuant to 37 CFR 1.137(b) was unintentional. The Commissioner may required additional information where there is a question whether the delay was unintentional; and

(4) any terminal disclaimer (and fee as set forth in 37 CFR 1.20(d)) required pursuant to 37 CFR 1.137(c)).

Petitioner must submit a Terminal Disclaimer with any renewed petition since this is a design application. **Petitioner should note that submission of any renewed petition without the required reply will be construed as intentional delay.**

Further correspondence with respect to this matter should be addressed as follows:

By mail: Mail Stop Petitions
Commissioner for Patents
P.O. Box 1450
Alexandria VA 22313-1450

By FAX: (571) 273-8300
ATTN: Office of Petitions

Telephone inquiries concerning this matter may be directed to the undersigned Petitions Attorney at (571) 272-3212.

Patricia Faison-Ball

Patricia Faison-Ball
Senior Petitions Attorney
Office of Petitions

UNITED STATES PATENT AND TRADEMARK OFFICE

Commissioner for Patents
United States Patent and Trademark Office
P.O. Box 1450
Alexandria, VA 22313-1450
www.uspto.gov

GALASSO & ASSOCIATES, LP
P.O. BOX 26503
AUSTIN, TX 78755-0503

COPY MAILED

FEB 01 2008

OFFICE OF PETITIONS

In re Application of :
Michael A. Ignozzi :
Application No. 29/252,480 :
Filed: January 23, 2006 :
Attorney Docket No.: 1723.050524 :

ON PETITION

This is a decision on the renewed petition filed October 3, 2007 under 37 CFR 1.137(b),[1] to revive the above-identified application.

The petition under 37 CFR 1.137 (b) is **GRANTED**.

This application became abandoned April 28, 2006 for failure to timely respond to the Notice to File Missing Parts on or before April 27, 2006. Preceding the mailing of the Notice of Abandonment, a petition to revive was filed March 19, 2007 with a response to the Notice to File Missing Parts but was dismissed in a decision mailed August 8, 2007 because the petition was not accompanied by a terminal disclaimer.

All other requirements of 37 CFR 1.137(b), including the filing of a terminal disclaimer, having now been met, this matter is being referred to the Office of Patent Application Processing for further pre-examination processing.

Telephone inquiries concerning this matter may be directed to the undersigned Petitions Attorney at (571) 272-3212.

Patricia Faison-Ball

Patricia Faison-Ball
Senior Petitions Attorney
Office of Petitions

---

[1] Effective December 1, 1997, the provisions of 37 CFR 1.137(b) now provide that where the delay in reply was unintentional, a petition may be filed to revive an abandoned application or a lapsed patent pursuant to 37 CFR 1.137(b). A grantable petition filed under the provisions of 37 CFR 1.137(b) must be accompanied by:

(1) the required reply, unless previously filed. In a nonprovisional application abandoned for failure to prosecute, the required reply may be met by the filing of a continuing application. In a nonprovisional application filed on or after June 8, 1995, and abandoned for failure to prosecute, the required reply may also be met by the filing of a request for continued examination in compliance with § 1.114. In an application or patent, abandoned or lapsed for failure to pay the issue fee or any portion thereof, the required reply must be the payment of the issue fee or any outstanding balance thereof.

(2) the petition fee as set forth in 37 CFR 1.17(m);

(3) a statement that the entire delay in filing the required reply from the due date for the reply until the filing of a grantable petition pursuant to 37 CFR 1.137(b) was unintentional. The Commissioner may required additional information where there is a question whether the delay was unintentional; and

(4) any terminal disclaimer (and fee as set forth in 37 CFR 1.20(d)) required pursuant to 37 CFR 1.137(c)).

SPE RESPONSE FOR CERTIFICATE OF CORRECTION

Paper No.: _____

DATE : March 31, 2008

TO SPE OF : ART UNIT 2913

SUBJECT : Request for Certificate of Correction for Appl. No 29/252487 patent noD551298

Please respond to this request for a certificate of correction within 7 days.

Please review the requested changes/corrections as shown in the **COCIN** document(s) in the IFW application image. No new matter should be introduced, nor should the scope or meaning of the claims be changed.

Please complete the response (see below) and forward the completed response to scanning using document code **COCX**.

Magdalene Talley

Certificates of Correction Branch

703-308-9390 ext. 116

Thank You For Your Assistance

The request for issuing the above-identified correction(s) is hereby:

Note your decision on the appropriate box.

- [X] **Approved** — **All** changes apply.
- [ ] **Approved in Part** — Specify below which changes **do not** apply.
- [ ] **Denied** — State the reasons for denial below.

Comments: _____

Caron D. Veynar

CARON D. VEYNAR

SUPERVISORY PATENT EXAMINER

SPE

2913

Art Unit

UNITED STATES PATENT AND TRADEMARK OFFICE

Commissioner for Patents
United States Patent and Trademark Office
P.O. Box 1450
Alexandria, VA 22313-1450
www.uspto.gov

THE BLACK & DECKER CORPORATION
701 EAST JOPPA ROAD, TW199
TOWSON MD 21286

COPY MAILED

AUG 15 2008

In re Application of	:	
Leasure, et al.	:	
Application No. 29/252,514	:	DECISION ON PETITION
Filed: January 24, 2006	:	
Attorney Docket No. JK-10685	:	

This is a decision on the petition, filed June 19, 2008 (certificate of mailing date June 18, 2008) under 37 CFR 1.181 to withdraw the holding of abandonment.

The petition under 37 CFR 1.181 to withdraw the holding of abandonment is **GRANTED**.

The Office contended that this application became abandoned on April 24, 2008, for failure to submit the issue fee by April 23, 2008, as was required by the January 23, 2008 Notice of Allowance and Fee(s) Due. A Notice of Abandonment was mailed on May 19, 2008.

On March 25, 2008 applicants filed a PTOL-85b fee transmittal. Under section 4a of the form, which states, "The following fees are submitted:", applicants checked the box for issue fee payment. However, through inadvertent mistake, a deposit account number was not provided on the PTOL-85b.

Where it is clear that an applicant actually intends to pay the issue fee, but the proper fee payment is not made, for example, an incorrect issue fee amount is supplied, or a PTOL-85B Fee(s) Transmittal form is filed without payment of the issue fee, a general authorization to pay fees or a specific authorization to pay the issue fee, submitted prior to the mailing of a Notice of Allowance, will be allowed to act as payment of the correct issue fee. 37 CFR 1.311(b) MPEP 1306

It is clear that applicants intended to pay the issue fee from a brief glance at the PTOL-85b. Several general authorizations to pay fees are present in the application file. Therefore, the Office should have charged the issue fee to the deposit account listed in the application file.

Accordingly, the holding of abandonment is **withdrawn,** the May 19, 2008 Notice of Abandonment is **vacated**, and the petition under 37 CFR 1.181 is **granted**. No petition fee has been or will be charged in connection with this matter.

The issue fee of $820.00 will be charged to deposit account no. 02-2548.

After the mailing of this decision, the application file will be forwarded to the Office of Data Management for processing into a patent.

Telephone inquiries pertaining to this decision may be directed to the undersigned at (571) 272-3230.

Shirene Willis Brantley

Shirene Willis Brantley
Senior Petitions Attorney
Office of Petitions

UNITED STATES PATENT AND TRADEMARK OFFICE

Commissioner for Patents
United States Patent and Trademark Office
P.O. Box 1450
Alexandria, VA 22313-1450
www.uspto.gov

SAIDMAN DESIGNLAW GROUP
8601 GEORGIA AVE
SUITE 603
SILVER SPRING, MD 20910

COPY MAILED

FEB 27 2008

OFFICE OF PETITIONS

In re Application of
Thomas Decicco, et al.
Application No. 29/252,523
Filed: January 24, 2006
Attorney Docket No. 1724.L.001:C9

ON PETITION

This is a decision on the petition under 37 CFR 1.137(b), filed November 14, 2007, to revive the above-identified design application.

The petition is **GRANTED**.

The application became abandoned for failure to timely pay the issue fee on or before October 29, 2007, as required by the Notice of Allowance and Fee(s) Due, mailed July 27, 2007, which set a statutory period for reply of three (3) months. On November 14, 2007, the present petition was filed. A Notice of Abandonment was subsequently mailed on February 4, 2008.

The petition satisfies the requirements of 37 CFR 1.137(b) in that petitioner has supplied (1) the reply in the form of the $820 issue fee and a substitute declaration, (2) the petition fee of $1,540, (3) an adequate statement of unintentional delay, and (4) a terminal disclaimer and fee as required by 37 CFR 1.137(d). Accordingly, the failure to timely pay the issue fee as required by the Notice of July 27, 2007 is accepted as being unintentionally delayed.

The terminal disclaimer filed November 14, 2007 is accepted and has been made of record. Any continuing application filed from this application must contain a copy of the terminal disclaimer. The copy of the terminal disclaimer must be filed with a cover letter requesting the terminal disclaimer be recorded on the continuing application. A copy of this decision should be attached to the cover letter.

The application is being referred to the Office of Data Management to be processed into a patent.

Telephone inquires related to this decision should be directed to the undersigned at (571) 272-3204. Telephone inquiries related to processing as a patent should be directed to (571) 272-4200.

Sherry D. Brinkley
Petitions Examiner
Office of Petitions

PTO/SB/27 (05-03)
Approved for use through 04/30/2003. OMB 0651-0031
U.S. Patent and Trademark Office; U.S. DEPARTMENT OF COMMERCE
Under the Paperwork Reduction Act of 1995, no persons are required to respond to a collection of information unless it displays a valid OMB control number.

REQUEST FOR EXPEDITED EXAMINATION OF A DESIGN APPLICATION (37 CFR 1.155)

Application Number	TBD
Filing Date	Herewith
First Named Inventor	William J. CASS
Title	Portion Of A Shoe Upper
Atty Docket Number	015127.00668

11/06 U.S. PTO
29/252544
012506

HAND DELIVER TO THE DESIGN GROUP DIRECTOR'S OFFICE
-or- ADDRESS TO:
MAIL STOP EXPEDITED DESIGN
COMMISSIONER FOR PATENTS
P.O. Box 1450
Alexandria, VA 22313-1450

This is a request for expedited examination of a design application under 37 CFR 1.155.

NOTE: If the Request made by this form accompanies original application papers, include form PTO/SB/18 "Design Patent Application Transmittal" or its equivalent.

Approved 2-14-06
Jacqueline M. Stone
Jacqueline M. Stone, Director
Technology Center 1700

A preexamination search was conducted. The field of search was:

D2/ 896, 902, 907, 908, 943, 944, 969, 972, 973, 974

Related applications: Attorney Docket No: 015127.00667

If not previously filed for the above-identified application, the following items required by 37 CFR 1.155 are enclosed:

Formal drawings (see 37 CFR 1.84).

The fee set forth in 37 CFR 1.17(k).

An information disclosure statement in compliance with 37 CFR 1.98.

January 25, 2006
Date

Signature

202-824-3000
Telephone Number

H. Wayne Porter, Reg. No. 42,084
Typed or printed name

WARNING: Information on this form may become public. Credit card information should not be included on this form. Provide credit card information and authorization on PTO-2038.

This collection of information is required by 37 CFR 1.155. The information is required to obtain or retain a benefit by the public which is to file (and by the USPTO to process) an application. Confidentiality is governed by 35 U.S.C. 122 and 37 CFR 1.14. This collection is estimated to take 6 minutes to complete, including gathering, preparing, and submitting the completed application form to the USPTO. Time will vary depending upon the individual case. Any comments on the amount of time you require to complete this form and/or suggestions for reducing this burden, should be sent to the Chief Information Officer, U.S. Patent and Trademark Office, U.S. Department of Commerce, P.O. Box 1450, Alexandria, VA 22313-1450. DO NOT SEND FEES OR COMPLETED FORMS TO THIS ADDRESS. SEND TO: Mail Stop Expedited Design, Commissioner for Patents, P.O. Box 1450, Alexandria, VA 22313-1450.

If you need assistance in completing the form, call 1-800-PTO-9199 and select option 2.

01 FC:1018 200.00 DA
02 FC:1116 100.00 DA
03 FC:1312 120.00 DA
04 FC:1802 900.00 DA

PTO/SB/27 (05-03)
Approved for use through 04/30/2003. OMB 0651-0031
U.S. Patent and Trademark Office; U.S. DEPARTMENT OF COMMERCE
Under the Paperwork Reduction Act of 1995, no persons are required to respond to a collection of information unless it displays a valid OMB control number.

REQUEST FOR EXPEDITED EXAMINATION OF A DESIGN APPLICATION (37 CFR 1.155)

Application Number	TBD
Filing Date	Herewith
First Named Inventor	William J. CASS
Title	Portion Of A Shoe Upper
Atty Docket Number	015127.00667

113006 U.S. PTO
29252545
012506

HAND DELIVER TO THE DESIGN GROUP DIRECTOR'S OFFICE
-or- ADDRESS TO:
MAIL STOP EXPEDITED DESIGN
COMMISSIONER FOR PATENTS
P.O. Box 1450
Alexandria, VA 22313-1450

This is a request for expedited examination of a design application under 37 CFR 1.155.

NOTE: If the Request made by this form accompanies original application papers, include form PTO/SB/18 "Design Patent Application Transmittal" or its equivalent.

A preexamination search was conducted. The field of search was:

D2/ 896, 902, 907, 908, 943, 944, 969, 972, 973, 974

Approved 2-14-06
Jacqueline M. Stone
Jacqueline M. Stone, Director
Technology Center 1700

Related applications: Attorney Docket No: 015127.00668

If not previously filed for the above-identified application, the following items required by 37 CFR 1.155 are enclosed:

Formal drawings (see 37 CFR 1.84).

The fee set forth in 37 CFR 1.17(k).

An information disclosure statement in compliance with 37 CFR 1.98.

January 25, 2006
Date

Signature

202-824-3000
Telephone Number

H. Wayne Porter, Reg. No. 42,084
Typed or printed name

WARNING: Information on this form may become public. Credit card information should not be included on this form. Provide credit card information and authorization on PTO-2038.

This collection of information is required by 37 CFR 1.155. The information is required to obtain or retain a benefit by the public which is to file (and by the USPTO to process) an application. Confidentiality is governed by 35 U.S.C. 122 and 37 CFR 1.14. This collection is estimated to take 6 minutes to complete, including gathering, preparing, and submitting the completed application form to the USPTO. Time will vary depending upon the individual case. Any comments on the amount of time you require to complete this form and/or suggestions for reducing this burden, should be sent to the Chief Information Officer, U.S. Patent and Trademark Office, U.S. Department of Commerce, P.O. Box 1450, Alexandria, VA 22313-1450. DO NOT SEND FEES OR COMPLETED FORMS TO THIS ADDRESS. SEND TO: Mail Stop Expedited Design, Commissioner for Patents, P.O. Box 1450, Alexandria, VA 22313-1450.

If you need assistance in completing the form, call 1-800-PTO-9199 and select option 2.

01/26/2006 FMETEKI1 00000082 29252545
01 FC:1017 200.00 DA
02 FC:1112 100.00 DA
03 FC:1312 130.00 DA
04 FC:1802 900.00 DA

UNITED STATES PATENT AND TRADEMARK OFFICE

Commissioner for Patents
United States Patent and Trademark Office
P.O. Box 1450
Alexandria, VA 22313-1450
www.uspto.gov

CAROL WILSON
BP AMERICA INC.
MAIL CODE 5 EAST
4101 WINFIELD ROAD
WARRENVILLE IL 60555

COPY MAILED

JUN 19 2008

OFFICE OF PETITIONS

In re Application of :
Park et al. :
Application No. 29/252,552 :
Filed: January 25, 2006 :
Attorney Docket No. 1779.1091 :

ON PETITION

This is a decision on the petition, filed May 21, 2008, which is being treated as a petition under 37 CFR 1.181 (no fee) requesting withdrawal of the holding of abandonment in the above-identified application. In the alternative, petitioner has requested consideration under 37 CFR 1.137(b).

The petition under 37 CFR 1.181 is **DISMISSED**.
The petition under 37 CFR 1.137(b) is **GRANTED.**

The application became abandoned for failure to timely file a reply within the meaning of 37 CFR 1.113 to the final Office action of June 22, 2007. The proposed reply required for consideration of a petition to revive must be a Notice of Appeal (and appeal fee required by 37 CFR 41.20(b)(2), an amendment that *prima facie* places the application in condition for allowance, a Request for Continued Examination and submission (37 CFR 1.114), or the filing of a continuing application under 37 CFR 1.53(b). See MPEP 711.03(c)(III)(A)(2). A three month extension of time pursuant to the provisions of 37 CFR 1.136(a) was obtained. Accordingly, the date of abandonment of this application is December 23, 2007. An improper request for continued examination was submitted on December 26, 2007. A Notice of Improper RCE was mailed on January 28, 2008. Petitioner filed a petition to convert the RCE to a CPA on February 7, 2008. A Notice of Abandonment was mailed on April 25, 2008.

Petition Under 37 CFR 1.181 to Withdraw Holding of Abandonment

Petitioner contends that the improper RCE should have been treated as a CPA. Petitioner argues since an improper CPA can be treated as an RCE, the reverse should be true.

Petitioner's argument has been considered but determined to be unpersuasive. The MPEP clearly states that any improper RCE filed in a design application will not be treated as a CPA. An improper RCE filed in a design application will not toll the running of any time period for reply.

It is further noted that the request to convert the RCE to a CPA filed on February 7, 2008 was submitted well after the six month statutory period expired on December 24, 2007.

Accordingly, the holding of abandonment was proper and will not be withdrawn.

Petition Under 37 CFR 1.137(b)

The petition is **GRANTED**.

The petition satisfies the requirements of 37 CFR 1.137(b) in that petitioner has supplied (1) the reply in the form of a Continued Prosecution Application (CPA) under 37 CFR 1.53(d); (2) the petition fee of $1540; (3) a proper statement of unintentional delay; and (4) a terminal disclaimer and fee as required by 37 CFR 1.137(d).

The terminal disclaimer is accepted and has been made of record.

This application is being revived solely for purposes of continuity. As continuity has been established by this decision, the application is again abandoned in favor of the CPA.

An extension of time under 37 CFR 1.136 must be filed prior to the expiration of the maximum extendable period for reply. *See* In re Application of S., 8 USPQ2d 1630, 1631 (Comm'r Pats. 1988). Since the $590 extension of time fee submitted on February 7, 2008 was subsequent to the maximum extendable period for reply, this fee is unnecessary and will be credited to petitioner's deposit account.

Telephone inquiries concerning this decision should be directed to the undersigned at (571) 272-3215.

This application is being referred to Technology Center AU 2914 for processing of the CPA.

Charlema Grant

Charlema Grant
Petitions Attorney
Office of Petitions

UNITED STATES PATENT AND TRADEMARK OFFICE

Commissioner for Patents
United States Patent and Trademark Office
P.O. Box 1450
Alexandria, VA 22313-1450
www.uspto.gov

STAAS & HALSEY LLP
SUITE 700
1201 NEW YORK AVENUE, N.W.
WASHINGTON DC 20005

COPY MAILED

JUN 26 2008

OFFICE OF PETITIONS

In re Application of :
Park et al. :
Application No. 29/252,552 :
Filed: January 25, 2006 :
Attorney Docket No. 1779.1091 :

ON PETITION

This is a decision on the petition, filed May 21, 2008, which is being treated as a petition under 37 CFR 1.181 (no fee) requesting withdrawal of the holding of abandonment in the above-identified application. In the alternative, petitioner has requested consideration under 37 CFR 1.137(b).

The petition under 37 CFR 1.181 is **DISMISSED**.
The petition under 37 CFR 1.137(b) is **GRANTED.**

The application became abandoned for failure to timely file a reply within the meaning of 37 CFR 1.113 to the final Office action of June 22, 2007. The proposed reply required for consideration of a petition to revive must be a Notice of Appeal (and appeal fee required by 37 CFR 41.20(b)(2), an amendment that *prima facie* places the application in condition for allowance, a Request for Continued Examination and submission (37 CFR 1.114), or the filing of a continuing application under 37 CFR 1.53(b). See MPEP 711.03(c)(III)(A)(2). A three month extension of time pursuant to the provisions of 37 CFR 1.136(a) was obtained. Accordingly, the date of abandonment of this application is December 23, 2007. An improper request for continued examination was submitted on December 26, 2007. A Notice of Improper RCE was mailed on January 28, 2008. Petitioner filed a petition to convert the RCE to a CPA on February 7, 2008. A Notice of Abandonment was mailed on April 25, 2008.

Petition Under 37 CFR 1.181 to Withdraw Holding of Abandonment

Petitioner contends that the improper RCE should have been treated as a CPA. Petitioner argues since an improper CPA can be treated as an RCE, the reverse should be true.

Petitioner's argument has been considered but determined to be unpersuasive. The MPEP clearly states that any improper RCE filed in a design application will not be treated as a CPA. An improper RCE filed in a design application will not toll the running of any time period for reply.

It is further noted that the request to convert the RCE to a CPA filed on February 7, 2008

was submitted well after the six month statutory period expired on December 24, 2007.

Accordingly, the holding of abandonment was proper and will not be withdrawn.

Petition Under 37 CFR 1.137(b)

The petition is **GRANTED**.

The petition satisfies the requirements of 37 CFR 1.137(b) in that petitioner has supplied (1) the reply in the form of a Continued Prosecution Application (CPA) under 37 CFR 1.53(d); (2) the petition fee of $1540; (3) a proper statement of unintentional delay; and (4) a terminal disclaimer and fee as required by 37 CFR 1.137(d).

The terminal disclaimer is accepted and has been made of record.

This application is being revived solely for purposes of continuity. As continuity has been established by this decision, the application is again abandoned in favor of the CPA.

An extension of time under 37 CFR 1.136 must be filed prior to the expiration of the maximum extendable period for reply. *See* In re Application of S., 8 USPQ2d 1630, 1631 (Comm'r Pats. 1988). Since the $590 extension of time fee submitted on February 7, 2008 was subsequent to the maximum extendable period for reply, this fee is unnecessary and will be credited to petitioner's deposit account.

Telephone inquiries concerning this decision should be directed to the undersigned at (571) 272-3215.

This application is being referred to Technology Center AU 2914 for processing of the CPA.

Charlema Grant

Charlema Grant
Petitions Attorney
Office of Petitions

UNITED STATES PATENT AND TRADEMARK OFFICE

Commissioner for Patents
United States Patent and Trademark Office
P.O. Box 1450
Alexandria, VA 22313-1450
www.uspto.gov

ROTHWELL, FIGG, ERNST & MANBECK, P.C.
1425 K STREET, N.W.
SUITE 800
WASHINGTON DC 20005

COPY MAILED
OCT 1 2 2006
OFFICE OF PETITIONS

In re Application of	:
Christopher Michael Penfold et al.	:
Application No. 29/252,603	: DECISION ON PETITION
Filed: January 26, 2006	:
Attorney Docket No: 2955-224	:

This is a decision on the petition filed June 29, 2006, which is treated under 37 CFR 1.182, to accord the above identified application a filing date of January 26, 2006 rather than the presently accorded filing date of March 28, 2006.

The petition is GRANTED.

On the date of deposit, the filing included, inter alia, a transmittal letter, a specification, six (6) sheets of drawings containing Figures 1 through 21, and Application Data Sheet (ADS) and a declaration.

On February 21, 2006, the Office of Initial Patent Examination mailed a Notice of Incomplete Nonprovisional Application "Notice" stating that the specification did not include at least one claim in compliance with 35 USC 112 and that the filing date of the application would be the date of receipt of a claim in compliance with 35 USC 112.

In response to the "Notice", on March 28, 2006, petitioner filed an amended ADS and copies of the specification and declaration filed with the application on January 26, 2006.

The declaration and power of attorney states:

> "I claim: The ornamental design for a Jar as shown ..... ."

A formal claim may not have been included with the application but since this a design application, the above-quoted language in the declaration and power of attorney can be construed as the claim, required by 35 USC 112 insofar as this design application is concerned. The form of a claim in a design application is fixed by rule and is accordingly

different from the claims of other applications. Accordingly, since this a design application and since the claim language quoted above does appear at the conclusion, or end, of the specification, there is no statutory prohibition against construing this language as the statutory required claim. It is also clear that there has been, and is, no doubt as to the form of, and what is to be claimed herein since this is a design application for which the form of the claim is set by 37 CFR 1.153.

Under the circumstances, it is appropriate that the language quoted above from the declaration and power of attorney be construed as the claim, for purposes of according this application a filing date of January 26, 2006.

Petitioner is reminded that errors such as occurred herein can result in loss of rights and care must be taken to avoid such.

In view of the above, the petition under 37 CFR 1.182 is **GRANTED**. The petition fee in the amount of $400.00 will be credited back to deposit account no. 02-2135.

This matter is being referred to the Office of Initial Patent Examination to correct the filing date to January 26, 2006, the date of deposit, using the application papers filed January 26, 2006 and March 28, 2006 and then to Technology Center 2912 for further examination.

Telephone inquiries concerning this matter may be directed to the undersigned Petitions Attorney at (571) 272-3212.

Patricia Faison-Ball

Patricia Faison-Ball
Senior Petitions Attorney
Office of Petitions

PTO/SB/27 (05-03)
Approved for use through 04/30/2003. OMB 0651-0031
U.S. Patent and Trademark Office; U.S. DEPARTMENT OF COMMERCE
Under the Paperwork Reduction Act of 1995, no persons are required to respond to a collection of information unless it displays a valid OMB control number.

REQUEST FOR EXPEDITED EXAMINATION OF A DESIGN APPLICATION (37 CFR 1.155)

Application Number	TBD
Filing Date	January 27, 2006
First Named Inventor	William J. CASS
Title	Portion Of A Shoe Upper
Atty Docket Number	015127.00661

113006 U.S. PTO
29252710
012706

HAND DELIVER TO THE DESIGN GROUP DIRECTOR'S OFFICE
-or- ADDRESS TO:
MAIL STOP EXPEDITED DESIGN
COMMISSIONER FOR PATENTS
P.O. Box 1450
Alexandria, VA 22313-1450

This is a request for expedited examination of a design application under 37 CFR 1.155.

NOTE: If the Request made by this form accompanies original application papers, include form PTO/SB/18 "Design Patent Application Transmittal" or its equivalent.

Approved 2-14-06
Jacqueline M. Stone
Jacqueline M. Stone, Director
Technology Center 1700

A preexamination search was conducted. The field of search was:

D2/896, 902, 907, 908, 943, 944, 969, 972 973 and 974

Related applications: _____

If not previously filed for the above-identified application, the following items required by 37 CFR 1.155 are enclosed:

Formal drawings (see 37 CFR 1.84).

The fee set forth in 37 CFR 1.17(k).

An information disclosure statement in compliance with 37 CFR 1.98.

January 27, 2006
Date

Darrell Mottley
Signature

202-824-3000
Telephone Number

Darrell G. Mottley, Reg. No. 42,912
Typed or printed name

WARNING: Information on this form may become public. Credit card information should not be included on this form. Provide credit card information and authorization on PTO-2038.

This collection of information is required by 37 CFR 1.155. The information is required to obtain or retain a benefit by the public which is to file (and by the USPTO to process) an application. Confidentiality is governed by 35 U.S.C. 122 and 37 CFR 1.14. This collection is estimated to take 6 minutes to complete, including gathering, preparing, and submitting the completed application form to the USPTO. Time will vary depending upon the individual case. Any comments on the amount of time you require to complete this form and/or suggestions for reducing this burden, should be sent to the Chief Information Officer, U.S. Patent and Trademark Office, U.S. Department of Commerce, P.O. Box 1450, Alexandria, VA 22313-1450. DO NOT SEND FEES OR COMPLETED FORMS TO THIS ADDRESS. SEND TO: Mail Stop Expedited Design, Commissioner for Patents, P.O. Box 1450, Alexandria, VA 22313-1450.

If you need assistance in completing the form, call 1-800-PTO-9199 and select option 2.

01/30/2006 SSITHIB1 00000026 190733 29252710
04 FC:1802 900.00 DA

PTO/SB/27 (05-03)
Approved for use through 04/30/2003. OMB 0651-0031
U.S. Patent and Trademark Office; U.S. DEPARTMENT OF COMMERCE
Under the Paperwork Reduction Act of 1995, no persons are required to respond to a collection of information unless it displays a valid OMB control number.

REQUEST FOR EXPEDITED EXAMINATION OF A DESIGN APPLICATION (37 CFR 1.155)

Application Number	TBD
Filing Date	Herewith
First Named Inventor	Scott PORTZLINE
Title	Portion Of A Shoe Upper
Atty Docket Number	015127.00673

113006 U.S. PTO
29252711
012706

HAND DELIVER TO THE DESIGN GROUP DIRECTOR'S OFFICE
-or- ADDRESS TO:
MAIL STOP EXPEDITED DESIGN
COMMISSIONER FOR PATENTS
P.O. Box 1450
Alexandria, VA 22313-1450

This is a request for expedited examination of a design application under 37 CFR 1.155.

NOTE: If the Request made by this form accompanies original application papers, include form PTO/SB/18 "Design Patent Application Transmittal" or its equivalent.

A preexamination search was conducted. The field of search was:

D2/ 896, 902, 907, 908, 943, 944, 969, 972, 973, 974

Related applications: _____

If not previously filed for the above-identified application, the following items required by 37 CFR 1.155 are enclosed:

Formal drawings (see 37 CFR 1.84).

The fee set forth in 37 CFR 1.17(k).

An information disclosure statement in compliance with 37 CFR 1.98.

4-11-06
Approved
Jacqueline M. Stone
Jacqueline M. Stone, Director
Technology Center 1700

January 27, 2006
Date

Signature

202-824-3000
Telephone Number

H. Wayne Porter, Reg. No. 42,084
Typed or printed name

WARNING: Information on this form may become public. Credit card information should not be included on this form. Provide credit card information and authorization on PTO-2038.

This collection of information is required by 37 CFR 1.155. The information is required to obtain or retain a benefit by the public which is to file (and by the USPTO to process) an application. Confidentiality is governed by 35 U.S.C. 122 and 37 CFR 1.14. This collection is estimated to take 6 minutes to complete, including gathering, preparing, and submitting the completed application form to the USPTO. Time will vary depending upon the individual case. Any comments on the amount of time you require to complete this form and/or suggestions for reducing this burden, should be sent to the Chief Information Officer, U.S. Patent and Trademark Office, U.S. Department of Commerce, P.O. Box 1450, Alexandria, VA 22313-1450. DO NOT SEND FEES OR COMPLETED FORMS TO THIS ADDRESS. SEND TO: Mail Stop Expedited Design, Commissioner for Patents, P.O. Box 1450, Alexandria, VA 22313-1450.

If you need assistance in completing the form, call 1-800-PTO-9199 and select option 2.

01/30/2006 SSITHIB1 00000027 190733 29252711
04 FC:1802 900.00 DA

PTO/SB/27 (05-03)
Approved for use through 04/30/2003. OMB 0651-0031
U.S. Patent and Trademark Office; U.S. DEPARTMENT OF COMMERCE
Under the Paperwork Reduction Act of 1995, no persons are required to respond to a collection of information unless it displays a valid OMB control number.

REQUEST FOR EXPEDITED EXAMINATION OF A DESIGN APPLICATION (37 CFR 1.155)

Application Number	TBD
Filing Date	January 27, 2006
First Named Inventor	Susan Diane Cessor
Title	Portion Of A Shoe Outsole
Atty Docket Number	015127.00677

113006 U.S. PTO
29/252712
012706

HAND DELIVER TO THE DESIGN GROUP DIRECTOR'S OFFICE
-or- ADDRESS TO:
MAIL STOP EXPEDITED DESIGN
COMMISSIONER FOR PATENTS
P.O. Box 1450
Alexandria, VA 22313-1450

This is a request for expedited examination of a design application under 37 CFR 1.155.

NOTE: If the Request made by this form accompanies original application papers, include form PTO/SB/18 "Design Patent Application Transmittal" or its equivalent.

Approved 2-14-06
Jacqueline M. Stone
Jacqueline M. Stone, Director
Technology Center 1700

A preexamination search was conducted. The field of search was:

D2/947, 948, 949, 951, 952, 954, 956 and 957

Related applications: _____

If not previously filed for the above-identified application, the following items required by 37 CFR 1.155 are enclosed:

Formal drawings (see 37 CFR 1.84).

The fee set forth in 37 CFR 1.17(k).

An information disclosure statement in compliance with 37 CFR 1.98.

January 27, 2006	Darrell G. Mottley
Date	Signature
202-824-3000	Darrell G. Mottley, Reg. No. 42,912
Telephone Number	Typed or printed name

WARNING: Information on this form may become public. Credit card information should not be included on this form. Provide credit card information and authorization on PTO-2038.

01/30/2006 SSITHIB1 00000028 190733 29252712
04 FC:1802 900.00 DA

This collection of information is required by 37 CFR 1.155. The information is required to obtain or retain a benefit by the public which is to file (and by the USPTO to process) an application. Confidentiality is governed by 35 U.S.C. 122 and 37 CFR 1.14. This collection is estimated to take 6 minutes to complete, including gathering, preparing, and submitting the completed application form to the USPTO. Time will vary depending upon the individual case. Any comments on the amount of time you require to complete this form and/or suggestions for reducing this burden, should be sent to the Chief Information Officer, U.S. Patent and Trademark Office, U.S. Department of Commerce, P.O. Box 1450, Alexandria, VA 22313-1450. DO NOT SEND FEES OR COMPLETED FORMS TO THIS ADDRESS. SEND TO: Mail Stop Expedited Design, Commissioner for Patents, P.O. Box 1450, Alexandria, VA 22313-1450.

If you need assistance in completing the form, call 1-800-PTO-9199 and select option 2.

UNITED STATES PATENT AND TRADEMARK OFFICE

Commissioner for Patents
United States Patent and Trademark Office
P.O. Box 1450
Alexandria, VA 22313-1450
www.uspto.gov

CHIEN-HUI SU
P.O. BOX 70-121 TAICHUNG
TAICHUNG CITY 40899 TW TAIWAN

COPY MAILED

FEB 09 2009

OFFICE OF PETITIONS

In re Application of
Feng-Tsun Huang
Application No. 29/252,750
Filed: January 27, 2006
Attorney Docket No. MR2551-470

ON PETITION

This is a decision on the petition filed January 20, 2009 under 37 CFR 1.137(b), to revive the above-identified application.

The petition is **GRANTED.**

The above-identified application became abandoned for failure to submit the Issue fee in a timely manner in reply to the Notice of Allowance mailed May 25, 2007, which set a statutory period for reply of three (3) months. Accordingly, the above-identified application became abandoned on August 26, 2007.

The petition satisfies the conditions for revival pursuant to the provisions of 37 CFR 1.137(b) in that (1) the reply in the form of payment of the Issue fee; (2) the petition fee; (3) the required statement of unintentional delay; and (4) Terminal Disclaimer have been received. Accordingly, the issue fee is accepted as having been unintentionally delayed.

Telephone inquiries concerning this decision should be directed to the undersigned at (571) 272-3210.

This matter is being referred to the Office of Data Management for further processing.

Irvin Dingle
Petitions Examiner
Office of Petitions

UNITED STATES PATENT AND TRADEMARK OFFICE

Commissioner for Patents
United States Patent and Trademark Office
P.O. Box 1450
Alexandria, VA 22313-1450
www.uspto.gov

DALLAS OFFICE OF FULBRIGHT & JAWORSKI LLP
2200 ROSS AVENUE
SUITE 2800
DALLAS, TX 75201-2784

COPY MAILED

JAN 17 2007

OFFICE OF PETITIONS

In re Application of	:	
Gary Cooper	:	
Application No. 29/252,757	:	DECISION ON PETITION
Filed: January 26, 2006	:	
Attorney Docket No.	:	
37062/D002US/10512766		

This is a decision on the petition under 37 CFR 1.137(b), filed December 22, 2006, to revive the above-identified design application.

The petition is **DISMISSED**.

Any request for reconsideration of this decision must be submitted within TWO (2) MONTHS from the mail date of this decision. Extensions of time under 37 CFR 1.136(a) are permitted. The reconsideration request should include a cover letter entitled "Renewed Petition under 37 CFR 1.137(b)." This is **not** a final agency action within the meaning of 5 U.S.C. § 704.

This application became abandoned by operation of law for failure to timely pay the issue fee on or before September 14, 2006, as required by the Notice of Allowance and Fee(s) Due, mailed June 14, 2006. The Notice of Allowability mailed on June 14, 2006 also required the submission of corrected replacement drawings. As the issue fee was not timely paid, the date of abandonment of this application is September 15, 2006.

A grantable petition under 37 CFR 1.137(b) must be accompanied by: (1) the required reply, unless previously filed; (2) the petition fee as set forth in 37 CFR 1.17(m); (3) a statement that the entire delay in filing the required reply from the due date for the reply until the filing of a grantable petition pursuant to 37 CFR 1.137(b) was unintentional; and (4) any terminal

disclaimer (and fee as set forth in 37 CFR 1.20(d)) required by 37 CFR 1.137(d). Where there is a question as to whether either the abandonment or the delay in filing a petition under 37 CFR 1.137 was unintentional, the Director may require additional information. See MPEP 711.03(c).

The instant petition lacks item (4) above. Since the above-identified application is a design application, 37 CFR 1.137(d) requires a terminal disclaimer dedicating to the public a terminal part of the term of any patent granted on the application or any patent granted on any continuing application that contains a specific reference under 35 U.S.C. 120, 121, or 365(c) to the application. The period to be disclaimed will be a terminal part of the patent to be granted equivalent to the period of abandonment. The period of abandonment will be computed to be the number of months from the date of abandonment to the date of filing a grantable petition. A terminal disclaimer fee of $65 (small entity fee) is required and the terminal disclaimer must be signed by an attorney of record. If the terminal disclaimer is signed by an assignee, the assignee must comply with the requirements of 37 CFR 3.73(b).

Accordingly, a proper terminal disclaimer in accordance with 37 CFR 1.137(d), along with the required fee, must be submitted before revival of this application can be effected.

As noted above, this application became abandoned for failure to timely pay the issue fee. In an application or patent, abandoned or lapsed for failure to pay the issue fee or any portion thereof, the required reply must be the payment of the issue fee or any outstanding balance thereof. *See* MPEP 711.03(c)(II)(A)(1). Therefore, the filing of a continuing application under 37 CFR 1.53(d) is not a proper reply under 37 CFR 1.137(a)(1) or (b)(1). However, in view of the authorization contained in the petition to charge any additional fees due, the $400 issue fee will be charged to petitioner's deposit account. The issue fee is not refundable and may not be applied towards payment of the issue fee in the continuing application (in the event it is allowed).

As noted in the Office communication mailed December 8, 2006, the filing of a request for continued examination under 37 CFR 1.114 is improper in a design application. Accordingly, the $395 filing fee submitted therefor will be refunded to petitioner's deposit account in due course.

Additionally, as authorized, an amount of $215 will be assessed to petitioner's deposit account for the request for continued prosecution under 37 CFR 1.53(d).

Further correspondence with respect to this matter should be addressed as follows:

By mail: Mail Stop PETITION
Commissioner for Patents
Post Office Box 1450
Alexandria, VA 22313-1450

By hand: Customer Service Window
Mail Stop Petitions
Randolph Building
401 Dulany Street
Alexandria, VA 22314

By fax: (571) 273-8300
ATTN: Office of Petitions

Any questions concerning this matter may be directed to the undersigned at (571) 272-3218.

Frances Hicks

Frances Hicks
Petitions Examiner
Office of Petitions

UNITED STATES PATENT AND TRADEMARK OFFICE

Commissioner for Patents
United States Patent and Trademark Office
P.O. Box 1450
Alexandria, VA 22313-1450
www.uspto.gov

DALLAS OFFICE OF FULBRIGHT & JAWORSKI LLP
2200 ROSS AVENUE
SUITE 2800
DALLAS, TX 75201-2784

COPY MAILED

MAR 2 6 2007

OFFICE OF PETITIONS

In re Application of :
Gary Cooper :
Application No. 29/252,757 : ON PETITION
Filed: January 26, 2006 :
Attorney Docket No. :
37062/D002US/10512766

This is a decision on the renewed petition under 37 CFR 1.137(b), filed January 24, 2007, to revive the above-identified design application.

The petition is **GRANTED**.

This application became abandoned for failure to timely pay the issue fee on or before September 14, 2006, as required by the Notice of Allowance and Fee(s) Due, mailed June 14, 2006. The Notice of Allowability mailed on June 14, 2006 also required the submission of corrected replacement drawings. As the issue fee was not timely paid, the date of abandonment of this application is September 15, 2006.

The petition satisfies the requirements of 37 CFR 1.137(b) in that petitioner has supplied (1) issue fee payment of $400, (2) the petition fee of $750, (3) a proper statement of unintentional delay, and (4) a terminal disclaimer and fee as required by 37 CFR 1.137(d). Accordingly, the issue fee is accepted as being unintentionally delayed.

The terminal disclaimer is accepted and has been made of record.

This application is being revived solely for purposes of continuity. As continuity has been established by this decision, the application is again abandoned in favor of the CPA filed December 22, 2006.

Petitioner requests a refund of the $400 issue fee. However, as noted in the decision mailed January 17, 2007, in an application abandoned for failure to timely pay the issue fee, the required reply must be the payment of the issue fee. *Again, see* MPEP 711.03(c)(II)(A)(1). Therefore the filing of a continuing application under 37 CFR 1.53(d) is not a proper reply under 37 CFR 1.137(a)(1) or (b)(1). Accordingly, the issue fee charged to petitioner's deposit account is not refundable nor can it be applied towards the continuing application should the application be found to again contain allowable subject matter.

Telephone inquiries concerning this decision should be directed to the undersigned at (571) 272-3218.

This application is being referred to Technology Center AU 2912 for processing of the CPA filed December 22, 2006.

Frances Hicks
Petitions Examiner
Office of Petitions

UNITED STATES PATENT AND TRADEMARK OFFICE

Commissioner for Patents
United States Patent and Trademark Office
P.O. Box 1450
Alexandria, VA 22313-1450
www.uspto.gov

DALLAS OFFICE OF FULBRIGHT
& JAWORSKI LLP
2200 ROSS AVENUE, SUITE 2800
DALLAS, TX 75201-2784

COPY MAILED

APR 05 2007

OFFICE OF PETITIONS

In re Application of :
Gary Cooper :
Application No. 29/252,765 : DECISION ON PETITION
Filed: January 26, 2006 :
Attorney Docket No. :
37062/D001US/10512767

This is a decision on the petition under 37 CFR 1.137(b), filed December 21, 2006 and supplemented on January 24, 2007, to revive the above-identified design application.

The petition is **GRANTED**.

The application became abandoned for failure to timely pay the issue fee on or before September 14, 2006, as required by the Notice of Allowance and Fee(s) Due, mailed June 14, 2006. In an application or patent, abandoned or lapsed for failure to pay the issue fee or any portion thereof, the required reply must be the payment of the issue fee or any outstanding balance thereof. *See* MPEP 711.03(c)(III)(A)(1). Therefore, the filing of a continuing application under 37 CFR 1.53(b) is not a proper reply under 37 CFR 1.137(a)(1) or (b)(1). In view of the authorization contained in the petition to charge any additional fees due, the $400 issue fee will be charged to petitioner's deposit account. The issue fee is not refundable and may not be applied towards payment of the issue fee in the continuing application (in the event it is allowed).

The petition satisfies the requirements of 37 CFR 1.137(b) in that petitioner has supplied (1) the reply in the form of payment of the $400 issue fee, (2) the petition fee of $750, (3) an adequate statement of unintentional delay, and (4) a terminal disclaimer and fee as required by 37 CFR 1.137(d).

The terminal disclaimer is accepted and has been made of record. Any continuing application filed from this application must contain a copy of the terminal disclaimer. The copy of the

terminal disclaimer must be filed with a cover letter requesting the terminal disclaimer be recorded on the continuing application. A copy of this decision should be attached to the cover letter.

This application is being revived solely for purposes of continuity. As continuity has been established by this decision, the application is again abandoned in favor of the CPA.

Telephone inquiries concerning this decision should be directed to the undersigned at (571) 272-3218.

This application is being referred to Technology Center AU 2912 for processing of the CPA and for such taking such further action as the nature of the case requires.

Frances Hicks
Petitions Examiner
Office of Petitions

PTOISB/27 (09-04)
Approved for use through 07/31/2006. OMB 0651-0031
U.S. Patent and Trademark Office; U.S DEPARTMENT OF COMMERCE
Under the Paperwork Reduction ACT of 1995, no persons are required to respond to collection of information unless it displays a valid OMB control number.

REQUEST FOR EXPEDITED EXAMINATION OF A DESIGN APPLICATION (37 CFR 1.155)

Application Number	To be assigned
Filing Date	To be assigned
First Named Inventor	Matthew J. Holmes
Title	OUTSOLE OF A SHOE
Attorney Docket Number	2465-7617.2US

113006 U.S. PTO
29/252772
012706

ADDRESS TO:
MAIL STOP EXPEDITED DESIGN
COMMISSION FOR PATENTS
P.O. BOX 1450
Alexandria, VA 22313-1450

Approved 2-14-06
Jacqueline M. Stone
Jacqueline M. Stone, Director
Technology Center 1700

This is a request for expedited examination of a design application under 37 CER 1.155.

NOTE: If the Request made by this form accompanies original application papers, include form PTO/SB/18 "Design Patent Application Transmittal" or its equivalent.

A preexamination search was conducted. The field of search was:

US. CL. D2/896, D2/897, D2/902, D2/907, D2/908, D2/910 D2/911, D2/912, D2/916, D2/922, D2/935, D2/946, D2/947, D2/951, D2/952, D2/953, D2/954, D2/955, D2/956, D2/957, D2/958, D2/959, D2/960, D2/962, D2/967, D2/968, D2/969, D2/970, D2/971, D2/972, D2/975, D2/977, D2/978, 36/25R, 36/28, 36/29, 36/32R, 36/45, 36/50.1, 36/83, 36/88, 36/89, 36/93, 36/101, 36/102, 36/103, 36/104, 36/106, 36/108, 36/109, 36/113, 36/114, 36/115, 36/116, 36/126, 36/127, 36/128, 36/129, 36/130

Related applications: _____

If not previously filed for the above-identified application, the following items required by 37 CFR 1.155 are enclosed:

- Formal drawings (see 37 CFR 1.84).
- The fee set forth in 37 CFR 1.17(k).
- An information disclosure statement in compliance with 37 CFR 1.98.

Signature	27 Jan. 2006 Date
Laurence B. Bond Typed or printed name	30,549 Registration Number, if applicable
(801) 532-1922 Telephone Number	

WARNING: Information on this form may become public. Credit card information should not be included on this form. Provide credit card information and authorization on PTO-2038.

This collection of information is required by37 CFR 1.155. The information is required to obtain or retain a benefit by the public which is to file (and by the USPTO to process) an application. Confidentiality is governed by 35 U.S.C. 122 and 37 CFR 1.11 and 1.14. This collection is estimated to take 6 minutes to complete, including gathering, preparing, and submitting the completed application form to the USPTO. Time will vary depending upon the individual case. Any comments on the amount of time you require to complete this form and/or suggestions for reducing this burden, should be sent to the Chief Information Officer, U.S. Patent and Trademark Office, U.S. Department of Commerce, P.O. Box 1450, Alexandria, VA 22313-1450. DO NOT SEND FEES OR COMPLETED FORMS TO THIS ADDRESS. SEND TO: Commissioner for Patents, P.O. Box 1450, Alexandria, VA 22343-1450.
If you need assistance in completing the form, call 1-800-PTO-9199 and select option 2.

01/30/2006 LWONDIM1 00000059 201469 29252772
04 FC:1802 900.00 DA

PTO/SB/27 (09-04)
Approved for use through 07/31/2006. OMB 0651-0031
U.S. Patent and Trademark Office; U.S DEPARTMENT OF COMMERCE
Under the Paperwork Reduction ACT of 1995, no persons are required to respond to collection of information unless it displays a valid OMB control number.

REQUEST FOR EXPEDITED EXAMINATION OF A DESIGN APPLICATION (37 CFR 1.155)

Application Number	To be assigned
Filing Date	To be assigned
First Named Inventor	Kenneth Link
Title	PORTION OF A SHOE UPPER
Attorney Docket Number	2465-7472US

ADDRESS TO:
MAIL STOP EXPEDITED DESIGN
COMMISSION FOR PATENTS
P.O. BOX 1450
Alexandria, VA 22313-1450

Approved 2-14-06
Jacqueline M. Stone
Jacqueline M. Stone, Director
Technology Center 1700

113006 U.S. PTO
29/252773
012706

This is a request for expedited examination of a design application under 37 CER 1.155.

NOTE: If the Request made by this form accompanies original application papers, include form PTO/SB/18 "Design Patent Application Transmittal" or its equivalent.

A preexamination search was conducted. The field of search was:

US. CL. D2/896, D2/897, D2/902, D2/907, D2/908, D2/910 D2/911, D2/912, D2/916, D2/922, D2/935, D2/969, D2/970, D2/971, D2/972, 36/45, 36/50.1, 36/83, 36/88, 36/89, 36/93, 36/101, 36/102, 36/103, 36/104, 36/106, 36/108, 36/109, 36/113, 36/114, 36/115, 36/116, 36/126, 36/127, 36/128, 36/129, 36/130

Related applications: _____

If not previously filed for the above-identified application, the following items required by 37 CFR 1.155 are enclosed:

- Formal drawings (see 37 CFR 1.84).
- The fee set forth in 37 CFR 1.17(k).
- An information disclosure statement in compliance with 37 CFR 1.98.

Signature — Date: 27 January 2006

Laurence B. Bond — Typed or printed name

30,549 — Registration Number, if applicable

(801) 532-1922 — Telephone Number

WARNING: Information on this form may become public. Credit card information should not be included on this form. Provide credit card information and authorization on PTO-2038.

01/30/2006 LWONDIN1 00000058 29252773
04 FC:1802 900.00 OP

This collection of information is required by37 CFR 1.155. The information is required to obtain or retain a benefit by the public which is to file (and by the USPTO to process) an application. Confidentiality is governed by 35 U.S.C. 122 and 37 CFR 1.11 and 1.14. This collection is estimated to take 6 minutes to complete, including gathering, preparing, and submitting the completed application form to the USPTO. Time will vary depending upon the individual case. Any comments on the amount of time you require to complete this form and/or suggestions for reducing this burden, should be sent to the Chief Information Officer, U.S. Patent and Trademark Office, U.S. Department of Commerce, P.O. Box 1450, Alexandria, VA 22313-1450. DO NOT SEND FEES OR COMPLETED FORMS TO THIS ADDRESS. SEND TO: Commissioner for Patents, P.O. Box 1450, Alexandria, VA 22343-1450.
If you need assistance in completing the form, call 1-800-PTO-9199 and select option 2.

PTOISB/27 (09-04)
Approved for use through 07/31/2006. OMB 0651-0031
U.S. Patent and Trademark Office; U.S DEPARTMENT OF COMMERCE
Under the Paperwork Reduction ACT of 1995, no persons are required to respond to collection of information unless it displays a valid OMB control number.

REQUEST FOR EXPEDITED EXAMINATION OF A DESIGN APPLICATION (37 CFR 1.155)

Application Number	To be assigned
Filing Date	To be assigned
First Named Inventor	Matthew J. Holmes
Title	PORTION OF A SHOE UPPER
Attorney Docket Number	2465-7617.1US

113006 U.S. PTO
29252774
012706

ADDRESS TO:
MAIL STOP EXPEDITED DESIGN
COMMISSION FOR PATENTS
P.O. BOX 1450
Alexandria, VA 22313-1450

Approved 2-14-06
Jacqueline M. Stone
Jacqueline M. Stone, Director
Technology Center 1700

This is a request for expedited examination of a design application under 37 CER 1.155.

NOTE: If the Request made by this form accompanies original application papers, include form PTO/SB/18 "Design Patent Application Transmittal" or its equivalent.

A preexamination search was conducted. The field of search was:

US. CL. D2/896, D2/897, D2/902, D2/907, D2/908, D2/910 D2/911, D2/912, D2/916, D2/922, D2/935, D2/969, D2/970, D2/971, D2/972, 36/45, 36/50.1, 36/83, 36/88, 36/89, 36/93, 36/101, 36/102, 36/103, 36/104, 36/106, 36/108, 36/109, 36/113, 36/114, 36/115, 36/116, 36/126, 36/127, 36/128, 36/129, 36/130

Related applications: _____

If not previously filed for the above-identified application, the following items required by 37 CFR 1.155 are enclosed:

- Formal drawings (see 37 CFR 1.84).
- The fee set forth in 37 CFR 1.17(k).
- An information disclosure statement in compliance with 37 CFR 1.98.

Signature — Date: 27 Jan. 2006

Laurence B. Bond — Registration Number, if applicable: 30,549
Typed or printed name

(801) 532-1922
Telephone Number

WARNING: Information on this form may become public. Credit card information should not be included on this form. Provide credit card information and authorization on PTO-2038.

This collection of information is required by37 CFR 1.155. The information is required to obtain or retain a benefit by the public which is to file (and by the USPTO to process) an application. Confidentiality is governed by 35 U.S.C. 122 and 37 CFR 1.11 and 1.14. This collection is estimated to take 6 minutes to complete, including gathering, preparing, and submitting the completed application form to the USPTO. Time will vary depending upon the individual case. Any comments on the amount of time you require to complete this form and/or suggestions for reducing this burden, should be sent to the Chief Information Officer, U.S. Patent and Trademark Office, U.S. Department of Commerce, P.O. Box 1450, Alexandria, VA 22313-1450. DO NOT SEND FEES OR COMPLETED FORMS TO THIS ADDRESS. SEND TO: Commissioner for Patents, P.O. Box 1450, Alexandria, VA 22343-1450.
If you need assistance in completing the form, call 1-800-PTO-9199 and select option 2.

01/30/2006 LWONDIR1 00000057 201469 29252774
04 FC:1802 900.00 DA

PTOISB/27 (09-04)
Approved for use through 07/31/2006. OMB 0651-0031
U.S. Patent and Trademark Office; U.S DEPARTMENT OF COMMERCE
Under the Paperwork Reduction ACT of 1995, no persons are required to respond to collection of information unless it displays a valid OMB control number.

REQUEST FOR EXPEDITED EXAMINATION OF A DESIGN APPLICATION (37 CFR 1.155)

Application Number	To be assigned
Filing Date	To be assigned
First Named Inventor	Eric P. Avar, Kenneth Link
Title	PORTION OF A SHOE UPPER
Attorney Docket Number	2465-7473US

ADDRESS TO:

MAIL STOP EXPEDITED DESIGN
COMMISSION FOR PATENTS
P.O. BOX 1450
Alexandria, VA 22313-1450

Approved 2-14-06
Jacqueline M. Stone
Jacqueline M. Stone, Director
Technology Center 1700

113006 U.S.PTO
29/252821
012706

This is a request for expedited examination of a design application under 37 CER 1.155.

NOTE: If the Request made by this form accompanies original application papers, include form PTO/SB/18 "Design Patent Application Transmittal" or its equivalent.

A preexamination search was conducted. The field of search was:

US. CL. D2/896, D2/897, D2/902, D2/907, D2/908, D2/910 D2/911, D2/912, D2/916, D2/922, D2/935, D2/969, D2/970, D2/971, D2/972, 36/45, 36/50.1, 36/83, 36/88, 36/89, 36/93, 36/101, 36/102, 36/103, 36/104, 36/106, 36/108, 36/109, 36/113, 36/114, 36/115, 36/116, 36/126, 36/127, 36/128, 36/129, 36/130

Related applications: _____

If not previously filed for the above-identified application, the following items required by 37 CFR 1.155 are enclosed:

- Formal drawings (see 37 CFR 1.84).
- The fee set forth in 37 CFR 1.17(k).
- An information disclosure statement in compliance with 37 CFR 1.98.

Signature — Date: 27 Jan. 2006

Laurence B. Bond
Typed or printed name

30,549
Registration Number, if applicable

(801) 532-1922
Telephone Number

WARNING: Information on this form may become public. Credit card information should not be included on this form. Provide credit card information and authorization on PTO-2038.

This collection of information is required by37 CFR 1.155. The information is required to obtain or retain a benefit by the public which is to file (and by the USPTO to process) an application. Confidentiality is governed by 35 U.S.C. 122 and 37 CFR 1.11 and 1.14. This collection is estimated to take 6 minutes to complete, including gathering, preparing, and submitting the completed application form to the USPTO. Time will vary depending upon the individual case. Any comments on the amount of time you require to complete this form and/or suggestions for reducing this burden, should be sent to the Chief Information Officer, U.S. Patent and Trademark Office, U.S. Department of Commerce, P.O. Box 1450, Alexandria, VA 22313-1450. DO NOT SEND FEES OR COMPLETED FORMS TO THIS ADDRESS. SEND TO: Commissioner for Patents, P.O. Box 1450, Alexandria, VA 22343-1450.
If you need assistance in completing the form, call 1-800-PTO-9199 and select option 2.

01/31/2006 HTECKLU1 00000034 29252821
04 FC:1802 900.00 OP

PTOISB/27 (09-04)
Approved for use through 07/31/2006. OMB 0651-0031
U.S. Patent and Trademark Office; U.S DEPARTMENT OF COMMERCE
Under the Paperwork Reduction ACT of 1995, no persons are required to respond to collection of information unless it displays a valid OMB control number.

REQUEST FOR EXPEDITED EXAMINATION OF A DESIGN APPLICATION (37 CFR 1.155)

Application Number	To be assigned
Filing Date	To be assigned
First Named Inventor	Matthew J. Holmes
Title	OUTSOLE OF A SHOE
Attorney Docket Number	2465-7617.3US

11306 U.S.PTO
29/252822
012706

ADDRESS TO:
MAIL STOP EXPEDITED DESIGN
COMMISSION FOR PATENTS
P.O. BOX 1450
Alexandria, VA 22313-1450

Approved 2-14-06
Jacqueline M. Stone
Jacqueline M. Stone, Director
Technology Center 1700

This is a request for expedited examination of a design application under 37 CER 1.155.

NOTE: If the Request made by this form accompanies original application papers, include form PTO/SB/18 "Design Patent Application Transmittal" or its equivalent.

A preexamination search was conducted. The field of search was:

US. CL. D2/896, D2/897, D2/902, D2/907, D2/908, D2/910 D2/911, D2/912, D2/916, D2/922, D2/935, D2/946, D2/947, D2/951, D2/952, D2/953, D2/954, D2/955, D2/956, D2/957, D2/958, D2/959, D2/960, D2/962, D2/967, D2/968, D2/969, D2/970, D2/971, D2/972, D2/975, D2/977, D2/978, 36/25R, 36/28, 36/29, 36/32R, 36/45, 36/50.1, 36/83, 36/88, 36/89, 36/93, 36/101, 36/102, 36/103, 36/104, 36/106, 36/108, 36/109, 36/113, 36/114, 36/115, 36/116, 36/126, 36/127, 36/128, 36/129, 36/130

Related applications: _____

If not previously filed for the above-identified application, the following items required by 37 CFR 1.155 are enclosed:

- Formal drawings (see 37 CFR 1.84).
- The fee set forth in 37 CFR 1.17(k).
- An information disclosure statement in compliance with 37 CFR 1.98.

Signature — Date: 27 Jan. 2006

Laurence B. Bond — Typed or printed name

30,549 — Registration Number, if applicable

(801) 532-1922 — Telephone Number

01/31/2006 HTECKLU1 00000035 201469 29252822
04 FC:1802 900.00 DA

WARNING: Information on this form may become public. Credit card information should not be included on this form. Provide credit card information and authorization on PTO-2038.

This collection of information is required by37 CFR 1.155. The information is required to obtain or retain a benefit by the public which is to file (and by the USPTO to process) an application. Confidentiality is governed by 35 U.S.C. 122 and 37 CFR 1.11 and 1.14. This collection is estimated to take 6 minutes to complete, including gathering, preparing, and submitting the completed application form to the USPTO. Time will vary depending upon the individual case. Any comments on the amount of time you require to complete this form and/or suggestions for reducing this burden, should be sent to the Chief Information Officer, U.S. Patent and Trademark Office, U.S. Department of Commerce, P.O. Box 1450, Alexandria, VA 22313-1450. DO NOT SEND FEES OR COMPLETED FORMS TO THIS ADDRESS. SEND TO: Commissioner for Patents, P.O. Box 1450, Alexandria, VA 22343-1450.
If you need assistance in completing the form, call 1-800-PTO-9199 and select option 2.

UNITED STATES PATENT AND TRADEMARK OFFICE

CERTIFICATE OF CORRECTION

PATENT NO. : **D593,585**

DATED: ****June 2, 2009**

INVENTOR(S): **Ota et al.**

It is certified that an error appears in the above-identified patent and that said Letters Patent is hereby corrected as shown below:

On the title page, the Terminal Disclaimer information has been omitted. Item (45) and the Notice information should read as follows:

-- (45) **Date of Patent: ** * Jun. 2, 2009**

(*) Notice: This patent is subject to a terminal disclaimer.

(**) Term: 14 Years --

Mailing address of sender:

OBLON, SPIVAK MCCLELLAND,
MAIER & NEUSTADT, P.C.
1940 DUKE STREET
ALEXANDRIA, VIRGINIA 22314
Tel. (703) 413-3000
Fax. (703) 413-2220
(OSMMN 03/09)

Patent No. D593,585

No. of add'l copies
@ .30 per page

SPE RESPONSE FOR CERTIFICATE OF CORRECTION

Paper No.: ——

DATE : 6/23/09

TO SPE OF : ART UNIT 2915

SUBJECT : Request for Certificate of Correction for Appl. No.: 29/252839 Patent No.: D593585 S

Please respond to this request for a certificate of correction within 7 days.

FOR IFW FILES:

Please review the requested changes/corrections as shown in the **COCIN** document(s) in the IFW application image. No new matter should be introduced, nor should the scope or meaning of the claims be changed.

Please complete the response (see below) and forward the completed response to scanning using document code **COCX**.

FOR PAPER FILES:

Please review the requested changes/corrections as shown in the attached certificate of correction. Please complete this form (see below) and forward it with the file to:

Certificates of Correction Branch (C of C)
Randolph Square 9D62-B
Palm Location 7580

Virginia Tolbert
Certificates of Correction Branch
703-756-1591

Thank You For Your Assistance

The request for issuing the above-identified correction(s) is hereby:
Note your decision on the appropriate box.

- ☒ **Approved** — All changes apply.
- ☐ **Approved in Part** — Specify below which changes **do not** apply.
- ☐ **Denied** — State the reasons for denial below.

Comments: _____

RS
SPE

2915
Art Unit

PTOL-306 (REV. 7/03)

U.S. DEPARTMENT OF COMMERCE Patent and Trademark Office

ROBERT M. SPEAR
~~DESIGN PRACTICE SPECIALIST~~ SPE

UNITED STATES PATENT AND TRADEMARK OFFICE

Commissioner for Patents
United States Patent and Trademark Office
P.O. Box 1450
Alexandria, VA 22313-1450
www.uspto.gov

Dennis W. Beech
LAW OFFICES OF DENNIS W. BEECH
Suite C-2
19900 Beach Blvd.
Huntington Beach CA 92648

COPY MAILED

SEP 0 8 2008

OFFICE OF PETITIONS

In re Application of	:	
Ernest D. **Cacciacarne**	:	
Application No. 29/252,842	:	DECISION ON PETITION
Filed: January 26, 2006	:	
Attorney Docket No. none	:	

This is a decision on the petition under 37 CFR 1.137(b), filed December 31, 2007, to revive the above-identified design application.

The petition is GRANTED.

The application became abandoned for failure to timely file corrected drawings on or before May 9, 2007, as required by the Notice of Allowance and Fee(s) Due, mailed February 9, 2007, which set a statutory period for reply of three (3) months. Accordingly, the application became abandoned on May 10, 2007. A Notice of Abandonment was mailed on September 14, 2007.

The petition satisfies the requirements of 37 CFR 1.137(b) in that petitioner has supplied (1) the reply in the form of the $400.00 issue fee, (2) the petition fee of $770.00, (3) a proper statement of unintentional delay, and (4) a terminal disclaimer and fee as required by 37 CFR 1.137(d). Accordingly, the failure to timely file corrected drawings as required by the Notice of Allowance is accepted as being unintentionally delayed.

The terminal disclaimer is accepted and has been made of record. Any continuing application filed from this application must contain a copy of the terminal disclaimer. The copy of the terminal disclaimer must be filed with a cover letter requesting the terminal disclaimer be recorded on the continuing application. A copy of this decision should be attached to the cover letter.

The file does not indicate a change of address has been submitted, although the address given on the petition differs from the address of record. If appropriate, a change of address should be filed in accordance with MPEP 601.03. A courtesy copy of this decision is being mailed to the address given on the petition; however, the Office will mail all future correspondence solely to the address of record.

Telephone inquiries concerning this decision should be directed to Phyllis Spivack at (571) 272-6052 or in her absence, the undersigned at 571-272-7099.

This application is being referred to the Office of Data Management for further processing in accordance with this decision on petition.

David Bucci
Petitions Examiner
Office of Petitions

cc: Dennis W. Beech
P.O. Box 519
Murrieta, CA 92564

PTO/SB/27 (09-04)
Approved for use through 07/31/2006. OMB 0651-0031
U.S. Patent and Trademark Office; U.S DEPARTMENT OF COMMERCE
Under the Paperwork Reduction ACT of 1995, no persons are required to respond to collection of information unless it displays a valid OMB control number.

REQUEST FOR EXPEDITED EXAMINATION OF A DESIGN APPLICATION (37 CFR 1.155)

Application Number	To be assigned
Filing Date	To be assigned
First Named Inventor	Matthew J. Holmes
Title	PORTION OF A SHOE UPPER
Attorney Docket Number	2465-7617US

ADDRESS TO:

MAIL STOP EXPEDITED DESIGN
COMMISSION FOR PATENTS
P.O. BOX 1450
Alexandria, VA 22313-1450

113006 U.S. PTO
29/252845
012706

This is a request for expedited examination of a design application under 37 CER 1.155.

NOTE: If the Request made by this form accompanies original application papers, include form PTO/SB/18 "Design Patent Application Transmittal" or its equivalent.

Approved 2-14-06
Jacqueline M. Stone
Jacqueline M. Stone, Director
Technology Center 1700

A preexamination search was conducted. The field of search was:

US. CL. D2/896, D2/897, D2/902, D2/907, D2/908, D2/910 D2/911, D2/912, D2/916, D2/922, D2/935, D2/969, D2/970, D2/971, D2/972, 36/45, 36/50.1, 36/83, 36/88, 36/89, 36/93, 36/101, 36/102, 36/103, 36/104, 36/106, 36/108, 36/109, 36/113, 36/114, 36/115, 36/116, 36/126, 36/127, 36/128, 36/129, 36/130

Related applications: _____

If not previously filed for the above-identified application, the following items required by 37 CFR 1.155 are enclosed:

- Formal drawings (see 37 CFR 1.84).
- The fee set forth in 37 CFR 1.17(k).
- An information disclosure statement in compliance with 37 CFR 1.98.

Signature — Date: 27 January 2006

Laurence B. Bond
Typed or printed name

30,549
Registration Number, if applicable

(801) 532-1922
Telephone Number

WARNING: Information on this form may become public. Credit card information should not be included on this form. Provide credit card information and authorization on PTO-2038.

This collection of information is required by37 CFR 1.155. The information is required to obtain or retain a benefit by the public which is to file (and by the USPTO to process) an application. Confidentiality is governed by 35 U.S.C. 122 and 37 CFR 1.11 and 1.14. This collection is estimated to take 6 minutes to complete, including gathering, preparing, and submitting the completed application form to the USPTO. Time will vary depending upon the individual case. Any comments on the amount of time you require to complete this form and/or suggestions for reducing this burden, should be sent to the Chief Information Officer, U.S. Patent and Trademark Office, U.S. Department of Commerce, P.O. Box 1450, Alexandria, VA 22313-1450. DO NOT SEND FEES OR COMPLETED FORMS TO THIS ADDRESS. SEND TO: **Commissioner for Patents, P.O. Box 1450, Alexandria, VA 22343-1450.**
If you need **assistance** *in completing the form, call 1-800-PTO-9199* **and select** *option 2.*

02/01/2006 EAYALEW1 00000023 201469 29252845
04 FC:1802 900.00 DA

UNITED STATES PATENT AND TRADEMARK OFFICE

Commissioner for Patents
United States Patent and Trademark Office
P.O. Box 1450
Alexandria, VA 22313-1450
www.uspto.gov

TRASKBRITT
P O BOX 2550
SALT LAKE CITY, UT 84110

COPY MAILED

APR 18 2007

OFFICE OF PETITIONS

In re Application of :
Matthew J. Holmes :
Application No. 29/252,845 : DECISION ON PETITION
Filed: January 27, 2006 :
Attorney Docket No. 2465-7617US :

This is a decision on the petition under 37 CFR 1.181, filed December 22, 2006, requesting withdrawal of the holding of abandonment or, in the alternative, as a petition under 37 CFR 1.137(b), to revive the above-identified design application.[1]

The petition under 37 CFR 1.181 is **DISMISSED**.

The petition under 37 CFR 1.137(b) is **GRANTED**.

This application became abandoned for failure to timely pay the $800 issue fee on or before August 4, 2006, as required by the Notice of Allowance and Fee(s) Due, mailed May 4, 2006. A Notice of Abandonment was mailed on October 26, 2006.

DISCUSSION OF PETITION UNDER 37 CFR 1.181

Petitioner states that the Part B form was received by the Office on May 11, 2006, which included an authorization to charge the issue fee to Deposit Account No. 20-1469. Petitioner further states that there were sufficient funds in petitioner's deposit account at the relevant time to charge the $800 issue fee due. In support of this assertion, petitioner has supplied a copy of his "Monthly Statement of Deposit Account." Additionally, petitioner states that the "Monthly Statement of Deposit Account" contains no indication that the deposit account was overdrawn at any time during the period in question.

In view of the fact that there appeared to be sufficient funds in petitioner's deposit account at the time to charge the $800 issue

[1] It is noted that a petition for expedited treatment was concurrently filed with the petition. However, expedited treatment was not given to the petition to revive. Accordingly, the $130 fee assessed for the petition will be refunded to petitioner's deposit account.

fee, an inquiry was made to the Office of Finance to determine why the Office was unable to charge the issue fee. In reply, the Office of Finance sent a statement of the deposit account to the undersigned (copy of which is attached) listing all the transactions, which occurred during the month of May of 2006. The statement shows that there were indeed insufficient funds on May 12, 2006, the date the Office attempted to charge the $800 issue fee.

Petitioner has not complied with 37 CFR 1.25 which states that "[a]n authorization to charge a fee to a deposit account will not be considered payment of the fee on the date the authorization to charge the fee is effective as to the particular fee to be charged unless sufficient funds are present in the account to cover the fee." In view thereof, the holding of abandonment was proper and will not be withdrawn.

DISCUSSION OF PETITION UNDER 37 CFR 1.137(b)

The petition satisfies the requirements of 37 CFR 1.137(b) in that petitioner has supplied (1) the reply in the form of the $800 issue fee payment, (2) the petition fee of $1,500, (3) a proper statement of unintentional delay, and (4) a terminal disclaimer and fee as required by 37 CFR 1.137(d).

The terminal disclaimer is accepted and has been made of record. Any continuing application filed from this application must contain a copy of the terminal disclaimer. The copy of the terminal disclaimer must be filed with a cover letter requesting the terminal disclaimer be recorded on the continuing application. A copy of this decision should be attached to the cover letter.

Telephone inquiries concerning this decision should be directed to the undersigned at (571) 272-3218.

This application is being referred to Publishing Division for appropriate action in accordance with this decision reviving the application.

Karen Creasy

Karen Creasy
Petitions Examiner
Office of Petitions

ATTACHMENT: Copy of Deposit Account Statement for May 2006

Deposit Account Statement

Requested Statement Month: May-06
Deposit Account Number: 201469
Name: TRASK & BRITT
Attention:
Address: P O BOX 2550
City: SALT LAKE CITY
State: UT
Zip: 84110
Country: UNITED STATES

DATE	SEQ	POSTING REF TXT	ATTORNEY DOCKET NBR	FEE CODE	AMT	BAL
1-May	4	5727894		9204	($1,215.00)	$10,616.90
2-May	115	29236473	2465-7212US	1502	$800.00	$9,816.90
2-May	116	29236473	2465-7212US	8001	$30.00	$9,786.90
2-May	117	29237358	2465-7212.1US	1502	$800.00	$8,986.90
2-May	118	29237358	2465-7212.1US	8001	$30.00	$8,956.90
2-May	1	P112024	2465-7763	1463	$200.00	$8,756.90
2-May	2	P112023	2465-7762	1463	$200.00	$8,556.90
2-May	3	P112022		1463	$200.00	$8,356.90
2-May	4	P112021	24657773	1463	$200.00	$8,156.90
2-May	5	P112020	24657771	1463	$200.00	$7,956.90
3-May	64	29245132	2465-7477.1US	1502	$800.00	$7,156.90
3-May	131	10618526	2578-3833.9US	1814	$130.00	$7,026.90
3-May	210	9058602	3207-7775US	8008	$200.00	$6,826.90
3-May	364	60496830	2923-6033.1US	8021	$120.00	$6,706.90
4-May	1	E-REPLENISHMENT		9203	($5,790.00)	$12,496.90
4-May	23	SUBSCRIPTION		8001	$6.00	$12,490.90
4-May	29	SUBSCRIPTION		8001	$33.00	$12,457.90
5-May	65	60772805	3015-7672US	8007	$20.00	$12,437.90
5-May	66	60684126	3015-7190US	8007	$20.00	$12,417.90
5-May	67	60678090	3015-6872US	8007	$20.00	$12,397.90
5-May	722	78876922	325	7001	$325.00	$12,072.90
5-May	1328	10977509	2183-5341.1US	1255	$2,160.00	$9,912.90
8-May	886	78878126	2792-TM2456US	7001	$650.00	$9,262.90
8-May	137	29251574	2465-7474.1US	1502	$800.00	$8,462.90

8-May	138	29251574	2465-7474.1US	8001	$30.00	$8,432.90
8-May	139	29252773	2465-7472US	1502	$800.00	$7,632.90
8-May	140	29252773	2465-7472US	8001	$30.00	$7,602.90
8-May	141	29236691	2465-7332.1US	1502	$800.00	$6,802.90
8-May	142	29236691	2465-7332.1US	8001	$30.00	$6,772.90
8-May	143	29252774	2465-7617.1US	1502	$800.00	$5,972.90
8-May	144	29252774	2465-7617.1US	8001	$30.00	$5,942.90
8-May	198	29175208	1197-5679US	2502	$400.00	$5,542.90
8-May	199	29175208	1197-5679US	8001	$30.00	$5,512.90
8-May	44	E-REPLENISHMENT		9203	($8,546.00)	$14,058.90
8-May	21	P112045	24657797	1463	$200.00	$13,858.90
8-May	22	P112044	24657760	1463	$200.00	$13,658.90
8-May	23	P112043	24657761	1463	$200.00	$13,458.90
8-May	24	P112042	24657764	1463	$200.00	$13,258.90
8-May	25	P112041	24657768	1463	$200.00	$13,058.90
8-May	26	P112040		1463	$200.00	$12,858.90
8-May	27	P112039	24657765	1463	$200.00	$12,658.90
8-May	28	P112038	24657770	1463	$200.00	$12,458.90
10-May	1	10789465	0274-5456.1US	2253	$265.00	$12,193.90
10-May	2	10789465	0274-5456.1US	2201	$100.00	$12,093.90
10-May	27	9780205	4753US	1251	($120.00)	$12,213.90
11-May	23	SUBSCRIPTION		8001	$3.00	$12,210.90
11-May	31	SUBSCRIPTION		8001	$15.00	$12,195.90
11-May	729	76323894	1858-TM1728US	7004	$150.00	$12,045.90
11-May	59	60677226	2820-7174TW	8007	$40.00	$12,005.90
12-May	109	29255266	2465-7579US	1502	$800.00	$11,205.90
12-May	110	29255266	2465-7579US	8001	$30.00	$11,175.90
12-May	111	29255091	2465-7607US	1502	$800.00	$10,375.90
12-May	112	29255091	2465-7607US	8001	$30.00	$10,345.90
12-May	113	29255399	2465-7576US	1502	$800.00	$9,545.90
12-May	114	29255399	2465-7576US	8001	$30.00	$9,515.90
12-May	115	29255264	2465-7612US	1502	$800.00	$8,715.90
12-May	116	29255264	2465-7612US	8001	$30.00	$8,685.90
12-May	117	29255267	2465-7602US	1502	$800.00	$7,885.90
12-May	118	29255267	2465-7602US	8001	$30.00	$7,855.90
12-May	122	29255265	2465-7616US	1502	$800.00	$7,055.90
12-May	123	29255265	2465-7616US	8001	$30.00	$7,025.90
12-May	124	29255263	2465-7577US	1502	$800.00	$6,225.90
12-May	125	29255263	2465-7577US	8001	$30.00	$6,195.90

12-May	126	29255507	2465-7605US	1502	$800.00	$5,395.90	
12-May	127	29255507	2465-7605US	8001	$30.00	$5,365.90	
12-May	128	29255506	2456-7615US	1502	$800.00	$4,565.90	
12-May	129	29255506	2456-7615US	8001	$30.00	$4,535.90	
12-May	130	29255504	2140354-000003	1502	$800.00	$3,735.90	
12-May	131	29255504	2140354-000003	8001	$30.00	$3,705.90	
12-May	132	29255597	2465-7614US	1502	$800.00	$2,905.90	
12-May	133	29255597	2465-7614US	8001	$30.00	$2,875.90	
12-May	136	29255398	2465-7598US	1502	$800.00	$2,075.90	
12-May	137	29255398	2465-7598US	8001	$30.00	$2,045.90	
12-May	139	29236690	2465-7332US	1502	$800.00	$1,245.90	
12-May	140	29236690	2465-7332US	8001	$30.00	$1,215.90	
12-May	141	29256105	US2465-7	1502	$800.00	$415.90	
12-May	142	29256105	US2465-7	8001	$30.00	$385.90	
12-May	143	29256963	2465-7606US	8001	$30.00	$355.90	
12-May	144	29252845	2466-7617US	8001	$30.00	$325.90	
12-May	145	29255166	2465-757US	8001	$30.00	$295.90	
12-May	154	29255090	2465-7613US	8001	$30.00	$265.90	time of transaction 5/11/06 10:08pm
12-May	42	E-REPLENISHMENT		9203	($9,457.00)	$9,722.90	replenishment time 10:59am
15-May	2133	78329169	TM1998US	7004	$300.00	$9,422.90	
16-May	1	10295814	ARC 3267R1	1251	$120.00	$9,302.90	
17-May	54	78291342	TM1971US	7003	$100.00	$9,202.90	
17-May	107	78291342	TM1971US	7004	$150.00	$9,052.90	
17-May	102	11140791	2269-6679TW	8007	$20.00	$9,032.90	
18-May	34	SUBSCRIPTION		8001	$27.00	$9,005.90	
18-May	135	29245133	2465-7477US	1502	$800.00	$8,205.90	
18-May	136	29245133	2465-7477US	8001	$30.00	$8,175.90	
18-May	70	9679664	72827-1801	1801	$790.00	$7,385.90	
19-May	56	6039820	2507-5818US	8021	$40.00	$7,345.90	
19-May	64	6039820	2507-5818US	8021	$40.00	$7,305.90	
19-May	30	29210415	40059-0018	1464	$130.00	$7,175.90	
19-May	31	29210415	40059-0018	2017	$100.00	$7,075.90	
22-May	171	10286600	0274-2278.4US	8021	$40.00	$7,035.90	
22-May	176	10286600	0274-2278.4US	8021	$40.00	$6,995.90	
22-May	56	E-REPLENISHMENT		9203	($20,830.00)	$27,825.90	
23-May	59	151390697	2507-7812US	8014	$25.00	$27,800.90	
24-May	831	78291330	TM1903US	7004	$300.00	$27,500.90	
24-May	396	6423895	2507-7807.2US ET AL.	8021	$960.00	$26,540.90	

25-May	8	6825553	2269-5377.1SG JMM/CSK	8013	$25.00	$26,515.90
25-May	1	10081799	4428.1US	2401	$250.00	$26,265.90
25-May	2	10081799	4428.1US	2252	$225.00	$26,040.90
25-May	907	2446446	2422-TM1576US	7205	$100.00	$25,940.90
25-May	908	2446446	2422-TM1576US	7208	$200.00	$25,740.90
25-May	22	SUBSCRIPTION		8001	$3.00	$25,737.90
25-May	34	SUBSCRIPTION		8001	$48.00	$25,689.90
25-May	215	29260259	2465-7763US	1012	$200.00	$25,489.90
25-May	216	29260259	2465-7763US	1112	$100.00	$25,389.90
25-May	217	29260259	2465-7763US	1312	$130.00	$25,259.90
25-May	218	29260259	2465-7763US	1802	$900.00	$24,359.90
25-May	219	29260260	2465-7767US	1012	$200.00	$24,159.90
25-May	220	29260260	2465-7767US	1112	$100.00	$24,059.90
25-May	221	29260260	2465-7767US	1312	$130.00	$23,929.90
25-May	222	29260260	2465-7767US	1802	$900.00	$23,029.90
25-May	149	60683266	0120 US P00 PRO	8007	$20.00	$23,009.90
25-May	157	11170260	04-0998.00/US	8007	$20.00	$22,989.90
25-May	110	29260260	2465-7767US	8021	$40.00	$22,949.90
25-May	111	29260259	2465-7763US	8021	$40.00	$22,909.90
25-May	1521	78892565	3030-TM2463US	7001	$975.00	$21,934.90
30-May	66	9058602	3207-7775US	8008	($200.00)	$22,134.90
30-May	176	6088925	2507-5912.1US	8021	$40.00	$22,094.90
30-May	798	78287017	2102-TM1972	7004	$150.00	$21,944.90
30-May	83	11415542	3270-7786US	1202	$550.00	$21,394.90
30-May	85	11415542	3270-7786US	1203	$360.00	$21,034.90
31-May	13	5074522	2617.01-7361US	8021	$40.00	$20,994.90
31-May	21	5074522	2617.01-7361US	8021	$40.00	$20,954.90
31-May	142	11069823	2183-4541.1US	8021	$40.00	$20,914.90
31-May	150	11069823	2183-4541.1US	8021	$40.00	$20,874.90

START BALANCE	SUM OF CHARGES	SUM OF REPLENISH	END BALANCE
$9,401.90	$34,685.00	$46,158.00	$20,874.90

UNITED STATES PATENT AND TRADEMARK OFFICE

Commissioner for Patents
United States Patent and Trademark Office
P.O. Box 1450
Alexandria, VA 22313-1450
www.uspto.gov

LEDGLEY LAW
111 RICHMOND STREET WEST
SUITE 905
TORONTO, ONTARIO, CANADA M5H-2G4

COPY MAILED
DEC 11 2006
OFFICE OF PETITIONS

In re Application of	:
Richard James Thomson et al	: DECISION GRANTING PETITION
Application No. 29/252,939	: UNDER 37 CFR 1.313(c)(3) (CPA)
Filed: January 31, 2006	:
Attorney Docket No. 135-2US/CJL	:

This is a decision on the petition under 37 CFR 1.313(c)(3), filed December 11, 2006, to withdraw the above-identified application from issue after payment of the issue fee.

The petition is **GRANTED**.

The above-identified application is hereby withdrawn from issue in favor of a continued prosecution application (CPA) under 37 CFR 1.53(d).

Petitioner is advised that the issue fee paid on October 2, 2006 in the parent application is not refundable nor can it be applied towards any new Notice of Allowance which may issue on the CPA filed December 11, 2006.

Telephone inquiries should be directed to the undersigned at (571) 272-3218.

This matter is being referred to Technology Center AU 2912 for processing of the CPA and consideration of the concurrently filed Information Disclosure Statement.

Frances Hicks
Petitions Examiner
Office of Petitions

UNITED STATES PATENT AND TRADEMARK OFFICE

Commissioner for Patents
United States Patent and Trademark Office
P.O. Box 1450
Alexandria, VA 22313-1450
www.uspto.gov

LEDGLEY LAW
111 RICHMOND STREET WEST
SUITE 905
TORONTO, ON M5H-2G4 CA
CANADA

COPY MAILED

AUG 29 2007

OFFICE OF PETITIONS

In re Application of	:
Richard James Thomson et al	: DECISION GRANTING PETITION
Application No. 29/252,939	: UNDER 37 CFR 1.313(c)(3) (CPA)
Filed: January 31, 2006	:
Attorney Docket No. 135-2US/CJL	:

This is a decision on the petition under 37 CFR 1.313(c)(3), filed August 27, 2007, to withdraw the above-identified application from issue after payment of the issue fee.

The petition is **GRANTED**.

The above-identified application is hereby withdrawn from issue in favor of a continued prosecution application (CPA) under 37 CFR 1.53(d).

Petitioner is advised that the issue fee paid on July 20, 2007 in the parent application is not refundable nor can it be applied towards any new Notice of Allowance, which may issue on the CPA filed August 27, 2007.

Telephone inquiries should be directed to Irvin Dingle at (571) 272-3210.

This matter is being referred to Technology Center AU 2912 for processing of the CPA.

Irvin Dingle
Petition Examiner
Office of Petitions

UNITED STATES PATENT AND TRADEMARK OFFICE

Commissioner for Patents
United States Patent and Trademark Office
P.O. Box 1450
Alexandria, VA 22313-1450
www.uspto.gov

DAVID A. WALKER
SUITE 920
6750 WEST LOOP SOUTH
BELLAIRE TX 77401

COPY MAILED

APR 0 4 2007

OFFICE OF PETITIONS

In re Application of
Elizabeth F. Meuser
Application No. 29/252,956
Filed: January 31, 2006
Attorney Docket No. LM-001

DECISION ON PETITION
TO WITHDRAW
FROM RECORD

This is a decision on the Request to Withdraw as attorney or agent of record under 37 C.F.R. § 1.36(b), filed February 9, 2007.

The request is **NOT APPROVED**.

The Office cannot approve the request at this time since the reason provided does not meet any of the conditions under the mandatory or permissive categories enumerated in 37 CFR 10.40. Section 10.40 of Title 37 of the Code of Federal Regulation states, "a practitioner shall not withdraw from employment in a proceeding before the Office without permission from the Office." More specifically, 37 CFR 10.40 states, "if paragraph (b) of this section is not applicable, a practitioner may not request permission to withdraw in matter pending before the Office unless such request or such withdrawal is" for one the permissive reasons listed in 37 CFR 10.40(c). The reason set forth in the request, Attorney David Walker, is moving overseas to an in-house counsel position, does not meet any of the conditions set forth in 37 CFR 10.40.

There are no Office actions pending at the present time.

All future communications from the Office will continue to be directed to the above-listed address until otherwise notified by applicant.

Telephone inquiries concerning this decision should be directed to Diane Goodwyn at 571-272-6735.

April Wise
Petitions Examiner
Office of Petitions

cc: ELIZABETH F. MEUSER
5603 SPELLMAN ROAD
HOUSTON TX 77096

SCAN! **Please forward case and paper to address shown below.**

SPE RESPONSE FOR CERTIFICATE OF CORRECTION

Paper No.: _____

DATE : 8/22/07

TO SPE OF : ART UNIT 2911

SUBJECT : Request for Certificate of Correction for Appl. No.: 29/252992 Patent No.: D538280

Please respond to this request for a certificate of correction within 7 days.

Please review the requested changes/corrections as shown in the attached certificate of correction. Please complete this form (see below) and forward it with the file to:

Certificates of Correction Branch (CofC)
South Tower - 9A22
Palm Location 7580

HENRY RANDALL
Certificates of Correction Branch
703-308-9390 ext. _____

Thank You For Your Assistance

The request for issuing the above-identified correction(s) is hereby:

Note your decision on the appropriate box.

- ☑ Approved — All changes apply.
- ☐ Approved in Part — Specify below which changes do not apply.
- ☐ Denied — State the reasons for denial below.

Comments: _____

CATHRON C. BROOKS
SUPERVISORY PATENT EXAMINER
SPE

2911
Art Unit

UNITED STATES PATENT AND TRADEMARK OFFICE

Commissioner for Patents
United States Patent and Trademark Office
P.O. Box 1450
Alexandria, VA 22313-1450
www.uspto.gov

LAW FIRM OF WALTER D. AMES
6718 WEMBERLY WAY
MCLEAN VA 22101

COPY MAILED
MAR 01 2010

In re Application of	:	
Charles R. REED	:	
Application No. 29/253,028	:	DECISION ON PETITION
Filed: February 01, 2006	:	
Attorney Docket No.	:	

This is a decision on the petition, filed August 04, 2009, which is being treated as a petition under 37 CFR 1.8(b), requesting withdrawal of the holding of abandonment in the above-identified application.

The petition is **DISMISSED**.

Any request for reconsideration of this decision should be filed within two (2) months from the mail date of this decision. *Note* 37 CFR 1.181(f). The request for reconsideration should include a cover letter and be entitled as a "Renewed Petition under 37 CFR 1.181 to Withdraw the Holding of Abandonment."

The application became abandoned for failure to submit formal drawings in a timely manner in reply to the Notice of Allowability, mailed April 02, 2009, which set a period for reply of three (3) months. Accordingly, this application became abandoned on July 03, 2009.

Petitioner asserts that a reply to the Office action dated April 02, 2009, was filed to the office in a timely manner on October 16, 2009. However, the petitioner did not provide the Office with any evidence such as a copy of a returned post card receipt or a receipt from the USPS.

A review of the Office records indicates that there is no sufficient evidence that the response was filed in a timely manner.

If petitioner cannot supply the evidence necessary to withdraw the holding of abandonment, or simply does not wish to, petitioner should consider filing a petition under 37 CFR 1.137(b) stating that the delay was unintentional. Public Law 97-247, § 3, 96 Stat. 317 (1982), which revised patent and trademark fees, amended 35 U.S.C. § 41(a)(7) to provide for the revival of an "unintentionally" abandoned application without a showing that the delay in prosecution or in late payment of the issue fee was "unavoidable." This amendment to 35 U.S.C. § 41(a)(7) has been implemented in 37 CFR 1.137(b). An "unintentional" petition under 37 CFR 1.137(b) must be accompanied by the $810.00 petition fee.

The filing of a petition under 37 CFR 1.137(b) cannot be intentionally delayed and therefore must be filed promptly. A person seeking revival due to unintentional delay cannot make a statement that the delay was unintentional unless the entire delay, including the date it was discovered that the application was abandoned until the filing of the petition to revive under 37 CFR 1.137(b), was unintentional. A statement that the delay was unintentional is not appropriate if petitioner intentionally delayed the filing of a petition for revival under 37 CFR 1.137(b).

Further correspondence with respect to this matter should be addressed as follows:

By Mail: Mail Stop PETITION
Commissioner for Patents
P. O. Box 1450
Alexandria, VA 22313-1450

By hand: U. S. Patent and Trademark Office
Customer Service Window, Mail Stop Petitions
Randolph Building
401 Dulany Street
Alexandria, VA 22314

By facsimile: **(571) 273-8300**
Attn: Office of Petitions

Telephone inquiries concerning this decision should be directed to Michelle R. Eason at (571) 272-4231.

Thurman K. Page
Petitions Examiner
Office of Petitions

OIPE
AUG 0 4 2009
PATENT & TRADEMARK OFFICE

PATENT

IN THE UNITED STATES PATENT AND TRADEMARK OFFICE

In re the Application of Charles R. Reed

Serial No. 29/253,028 Art Unit 2914

Filed: February 1, 2006 Examiner John Windmuller

For: Tube Holder

Mail Stop: Issue Fee
Commissioner for Patents
P.O. Box 1450
Alexandria, VA 22313-1450

PETITION TO WITHDRAW HOLDING OF ABANDONMENT

SIR:

By mailing date of July 28, 2009 a Notice of Abandonment of the subject application has been received. A copy of that Notice is annexed as Exhibit A. The basis of the alleged abandonment is that no corrected drawings had been received. A review of the file of this application is respectfully requested.

In a Notice of Allowability of this application, corrected drawings as well as changes to the specification were required. In response thereto, on January 16, 2009 applicant timely filed by mail a document entitled, Amendment. A copy of that Amendment is annexed as Exhibit B. The issue fee was then timely paid.

As will be apparent from Exhibit B, a Replacement Sheet of drawings was filed as well as a Replacement Specification. The third page of the Amendment is the Replacement Sheet of drawings. Pages 4 and 5 are the Replacement Specification as Amended. Pages 6 and 7 are the Clean Version of the Replacement Specification as

Amended.

Page 3 of the Amendment mailed January 16, 2009 is the Replacement Sheet of Drawings. It is respectfully requested that that this Amendment be reexamined to see if page 3 of the Amendment contains the missing drawing. Apparently the Amendment, itself, has been received because the Replacement Specification is not objected to.

Obviously applicant's undersigned counsel cannot know what happened to the Amendment after it was deposited in the mails. However, from the file of the application he believes and declares under oath that the single Replacement Sheet of drawings was sent to the USPTO on January 16, 2009 as page 3 of the Amendment, Exhibit B, and asks that the USPTO file be checked again.

Respectfully submitted,

Dated: August 3, 2009

Walter D. Ames
Attorney for Applicant, Reg. No. 17,913

Walter D. Ames
Law Firm of Walter D. Ames
6718 Wemberly Way
McLean, VA 22101

Tel: (703) 356-1737
Fax: (703) 448-3055
E-Mail: wdames@earthlink.net

UNITED STATES PATENT AND TRADEMARK OFFICE

Commissioner for Patents
United States Patent and Trademark Office
P.O. Box 1450
Alexandria, VA 22313-1450
www.uspto.gov

LAW FIRM OF WALTER D. AMES
6718 WEMBERLY WAY
MCLEAN VA 22101

MAILED

MAY 19 2010

OFFICE OF PETITIONS

In re Application of	:	
Charles R. REED	:	
Application No. 29/253,028	:	DECISION ON PETITION
Filed: February 01, 2006	:	
Attorney Docket No.	:	

This is a decision on the petition under 37 CFR 1.137(b), filed April 23, 2010, to revive the above-identified design application.

The petition is **GRANTED**.

The application became abandoned for failure to submit formal drawings in a timely manner in reply to the Notice of Allowability, mailed April 02, 2009, which set a period for reply of three (3) months. Accordingly, this application became abandoned on July 03, 2009.

The petition satisfies the requirements of 37 CFR 1.137(b) in that petitioner has supplied (1) the reply in the form of the corrected formal drawings,(2) the petition fee of $810.00, (3) a proper statement of unintentional delay, and (4) a terminal disclaimer and fee as required by 37 CFR 1.137(d). Accordingly, the failure to timely submit corrected formal drawings as required by the Notice of Notice of Allowability of April 02, 2009 is accepted as being unintentionally delayed.

The terminal disclaimer is accepted and has been made of record.

Telephone inquiries concerning this decision should be directed to the undersigned at (571) 272-4231.

This application is being referred to Office of Data Management for further processing in accordance with this decision on petition.

Michelle R. Eason
Paralegal Specialist
Office of Petitions

PTO/SB/27 (09-04)
Approved for use through 07/31/2006. OMB 0651-0031
U.S. Patent and Trademark Office; U.S DEPARTMENT OF COMMERCE
Under the Paperwork Reduction ACT of 1995, no persons are required to respond to collection of information unless it displays a valid OMB control number.

REQUEST FOR EXPEDITED EXAMINATION OF A DESIGN APPLICATION (37 CFR 1.155)

Application Number	TBA
Filing Date	February 1, 2006
First Named Inventor	Scott PORTZLINE
Title	Portion of a Shoe Midsole
Atty Docket Number	015127.00674

113006 U.S. PTO
29/253049
020106

ADDRESS TO:

MAIL STOP EXPEDITED DESIGN
COMMISSIONER FOR PATENTS
P.O. Box 1450
Alexandria, VA 22313-1450

This is a request for expedited examination of a design application under 37 CFR 1.155.

NOTE: If the Request made by this form accompanies original application papers, include form PTO/SB/18 "Design Patent Application Transmittal" or its equivalent.

Approved 2-14-06
Jacqueline M. Stone
Jacqueline M. Stone, Director
Technology Center 1700

A preexamination search was conducted. The field of search was:

D2/896, 902, 907, 908, 943, 944, 946, 947, 964, 967, 972, 977

Related applications: Attorney Docket No. 015127.00675

If not previously filed for the above-identified application, the following items required by 37 CFR 1.155 are enclosed:

- Formal drawings (see 37 CFR 1.84).
- The fee set forth in 37 CFR 1.17(k).
- An information disclosure statement in compliance with 37 CFR 1.98.

Signature	February 1, 2006 Date
H. Wayne Porter Typed or printed name	42,084 Registration Number, if applicable
202-824-3000 Telephone Number	

WARNING: Information on this form may become public. Credit card information should not be included on this form. Provide credit card information and authorization on PTO-2038.

This collection of information is required by 37 CFR 1.155. The information is required to obtain or retain a benefit by the public which is to file (and by the USPTO to process) an application. Confidentiality is governed by 35 U.S.C. 122 and 37 CFR 1.11 and 1.14. This collection is estimated to take 6 minutes to complete, including gathering, preparing, and submitting the completed application form to the USPTO. Time will vary depending upon the individual case. Any comments on the amount of time you require to complete this form and/or suggestions for reducing this burden, should be sent to the Chief Information Officer, U.S. Patent and Trademark Office, U.S. Department of Commerce, P.O. Box 1450, Alexandria, VA 22313-1450. DO NOT SEND FEES OR COMPLETED FORMS TO THIS ADDRESS. SEND TO: Commissioner for Patents, P.O. Box 1450, Alexandria, VA 22313-1450.

If you need assistance in completing the form, call 1-800-PTO-9199 and select option 2.

02/02/2006 SSITHIB1 00000057 190733 29253049
04 FC:1802 900.00 DA

PTO/SB/27 (05-03)
Approved for use through 04/30/2003. OMB 0651-0031
U.S. Patent and Trademark Office; U.S. DEPARTMENT OF COMMERCE
Under the Paperwork Reduction Act of 1995, no persons are required to respond to a collection of information unless it displays a valid OMB control number.

REQUEST FOR EXPEDITED EXAMINATION OF A DESIGN APPLICATION (37 CFR 1.155)

Application Number	TBD
Filing Date	Herewith
First Named Inventor	Andrew Caine
Title	PORTION OF A SHOE UPPER
Atty Docket Number	015127.00651

1 13006 U.S. PTO
29/253050
020106

HAND DELIVER TO THE DESIGN GROUP DIRECTOR'S OFFICE
-or- ADDRESS TO:
MAIL STOP EXPEDITED DESIGN
COMMISSIONER FOR PATENTS
P.O. Box 1450
Alexandria, VA 22313-1450

This is a request for expedited examination of a design application under 37 CFR 1.155.

NOTE: If the Request made by this form accompanies original application papers, include form PTO/SB/18 "Design Patent Application Transmittal" or its equivalent.

Approved 2-14-06
Jacqueline M. Stone
Jacqueline M. Stone, Director
Technology Center 1700

A preexamination search was conducted. The field of search was:

D2/ 896, 902, 907, 908, 943, 944, 969, 972, 973, and 974

Related applications: _____

If not previously filed for the above-identified application, the following items required by 37 CFR 1.155 are enclosed:

Formal drawings (see 37 CFR 1.84).

The fee set forth in 37 CFR 1.17(k).

An information disclosure statement in compliance with 37 CFR 1.98.

February 1, 2006
Date

Darrell G. Mottley
Signature

202-824-3000
Telephone Number

Darrell G. Mottley, Reg. No. 42,912
Typed or printed name

WARNING: Information on this form may become public. Credit card information should not be included on this form. Provide credit card information and authorization on PTO-2038.

This collection of information is required by 37 CFR 1.155. The information is required to obtain or retain a benefit by the public which is to file (and by the USPTO to process) an application. Confidentiality is governed by 35 U.S.C. 122 and 37 CFR 1.14. This collection is estimated to take 8 minutes to complete, including gathering, preparing, and submitting the completed application form to the USPTO. Time will vary depending upon the individual case. Any comments on the amount of time you require to complete this form and/or suggestions for reducing this burden, should be sent to the Chief Information Officer, U.S. Patent and Trademark Office, U.S. Department of Commerce, P.O. Box 1450, Alexandria, VA 22313-1450. DO NOT SEND FEES OR COMPLETED FORMS TO THIS ADDRESS. SEND TO: Mail Stop Expedited Design, Commissioner for Patents, P.O. Box 1450, Alexandria, VA 22313-1450.

If you need assistance in completing the form, call 1-800-PTO-9199 and select option 2.

02/02/2006 SSITHIB1 00000059 190733 29253050
01 FC:1802 900.00 DA

PTO/SB/27 (05-03)
Approved for use through 04/30/2003. OMB 0651-0031
U.S. Patent and Trademark Office; U.S. DEPARTMENT OF COMMERCE
Under the Paperwork Reduction Act of 1995, no persons are required to respond to a collection of information unless it displays a valid OMB control number.

REQUEST FOR EXPEDITED EXAMINATION OF A DESIGN APPLICATION (37 CFR 1.155)

Application Number	TBD
Filing Date	Herewith
First Named Inventor	David Joseph DIRSA
Title	Portion Of A Shoe Upper
Atty Docket Number	015127.00854

U.S. PTO
29253051
020106

HAND DELIVER TO THE DESIGN GROUP DIRECTOR'S OFFICE
-or- ADDRESS TO:
MAIL STOP EXPEDITED DESIGN
COMMISSIONER FOR PATENTS
P.O. Box 1450
Alexandria, VA 22313-1450

This is a request for expedited examination of a design application under 37 CFR 1.155.

NOTE: If the Request made by this form accompanies original application papers, include form PTO/SB/18 "Design Patent Application Transmittal" or its equivalent.

Approved 2-14-06
Jacqueline M. Stone
Jacqueline M. Stone, Director
Technology Center 1700

A preexamination search was conducted. The field of search was:

D2/ 896, 902, 907, 908, 943, 944, 969, 972, 973, 974

Related applications: _____

If not previously filed for the above-identified application, the following items required by 37 CFR 1.155 are enclosed:

Formal drawings (see 37 CFR 1.84).

The fee set forth in 37 CFR 1.17(k).

An information disclosure statement in compliance with 37 CFR 1.98.

February 1, 2006
Date

Signature

202-824-3000
Telephone Number

Darrell G. Mottley, Reg. N. 42,912
Typed or printed name

WARNING: Information on this form may become public. Credit card information should not be included on this form. Provide credit card information and authorization on PTO-2038.

This collection of information is required by 37 CFR 1.155. The information is required to obtain or retain a benefit by the public which is to file (and by the USPTO to process) an application. Confidentiality is governed by 35 U.S.C. 122 and 37 CFR 1.14. This collection is estimated to take 6 minutes to complete, including gathering, preparing, and submitting the completed application form to the USPTO. Time will vary depending upon the individual case. Any comments on the amount of time you require to complete this form and/or suggestions for reducing this burden, should be sent to the Chief Information Officer, U.S. Patent and Trademark Office, U.S. Department of Commerce, P.O. Box 1450, Alexandria, VA 22313-1450. DO NOT SEND FEES OR COMPLETED FORMS TO THIS ADDRESS. SEND TO: Mail Stop Expedited Design, Commissioner for Patents, P.O. Box 1450, Alexandria, VA 22313-1450.

If you need assistance in completing the form, call 1-800-PTO-9199 and select option 2.

02/02/2006 SSITHIB1 00000058 190733 29253051
01 FC:1802 900.00 DA

SPE RESPONSE FOR CERTIFICATE OF CORRECTION

Paper No.: _____

DATE : March 11, 2009

TO SPE OF : ART UNIT 2913
SUBJECT : Request for Certificate of Correction for Appl. No.: 29/253056 / D549283
Please respond to this request for a certificate of correction within 7 days.

FOR IFW FILES:

Please review the requested changes/corrections as shown in the **COCIN** document(s) in the IFW application image. No new matter should be introduced, nor should the scope or meaning of the claims be changed.

Please complete the response (see below) and forward the completed response to scanning using document code **COCX**.

FOR PAPER FILES:

Please review the requested changes/corrections as shown in the attached certificate of correction. Please complete this form (see below) and forward it with the file to:

Certificates of Correction Branch (CofC)
South Tower - 9A22
Palm Location 7580

Magdalene Talley
Certificates of Correction Branch
703-308-9390 ext. 120

Thank You For Your Assistance

The request for issuing the above-identified correction(s) is hereby:
Note your decision on the appropriate box.

- [x] **Approved** — **All** changes apply.
- [ ] **Approved in Part** — Specify below which changes **do not** apply.
- [ ] **Denied** — State the reasons for denial below.

Comments: _____

Caron D Veynar
CARON D. VEYNAR
SUPERVISORY PATENT EXAMINER

SPE **Art Unit**

UNITED STATES PATENT AND TRADEMARK OFFICE

OFFICE OF DATA MANAGEMENT

CASELLA & HESPOS
274 MADISON AVENUE
SUITE 1703
NEW YORK, NY 10016

In re Application of	:	
FITZGERALD MARY	:	
Application No. 29/253,072	:	DECISION ON PETITION
Filed: February 1, 2006	:	
Attorney Docket No. FITZGERALD-2	:	NOV 19 2008

This is a decision in response to the "Petition To Withdraw Holding of Abandonment," received in the United States Patent and Trademark Office (USPTO) April 14, 2008.

The petition is **DISMISSED**.

The above-identified application was held abandoned for applicant's failure to supply CORRECTED DRAWINGS, in the Notice of Allowance mailed on December 11, 2008. The Notice set a non-extendable three (3) month period for reply. The application became abandoned on April 4, 2008.

Provisions under 37 CFR 1.8(b) requires that the petitioner (1) promptly inform the Office of the previous timely mailing or transmission after becoming aware that the Office has no evidence of receipt of the correspondence, (2) supply copies of the previously mailed correspondence with certificate of mailing thereon, (3) include a statement which attests to the previous timely mailing.

The holding of abandonment cannot be withdrawn at this time.

Further correspondence should be directed to the Office Of Petition at 703-305-9282 or addressed

By mail: Commissioner for Patents
P O Box 1450
Mail Stop Petitions
Alexandria, VA 22313-1450

Telephone inquires concerning this decision may be directed to the undersigned at 703-308-9250 x 154.

Anita Greene
Application Assistance Unit
Office of Data Management

UNITED STATES PATENT AND TRADEMARK OFFICE

Commissioner for Patents
United States Patent and Trademark Office
P.O. Box 1450
Alexandria, VA 22313-1450
www.uspto.gov

Paper No.

MAILED

FEB 17 2009

OFFICE OF PETITIONS

CASELLA & HESPOS
274 MADISON AVENUE
NEW YORK NY 10016

In re Application of	:	
Mary Fitzgerald	:	
Application No. 29/253,072	:	DECISION ON RENEWED
Filed: February 1, 2006	:	PETITION PURSUANT TO
Attorney Docket No.:	:	37 C.F.R. § 1.181(A)
FITZGERALD-2	:	
Title: FLEXIBLE PLASTIC CORSAGE	:	
HOLDER BAND	:	

This is a decision on the renewed petition filed December 24, 2008, pursuant to 37 C.F.R. § 1.181(a), requesting that the holding of abandonment in the above-identified application be withdrawn.

This renewed petition pursuant to 37 C.F.R. § 1.181(a) is **DISMISSED**.

BACKGROUND

The above-identified application became abandoned for failure to submit drawings in a timely manner in reply to the Notice of Allowance and Issue Fee Due, mailed December 11, 2007, which set a shortened statutory period for reply of three months. No extensions of time are permitted for transmitting formal drawings.[1] Accordingly, the above-identified application became abandoned on March 12, 2008. A Notice of Abandonment was mailed on April 4, 2008.

1 See MPEP § 710.02(e)(III).

RELEVANT PORTIONS OF THE C.F.R.

35 U.S.C. § 133 sets forth, *in toto*:

> Upon failure of the applicant to prosecute the application within six months after any action therein, of which notice has been given or mailed to the applicant, or within such shorter time, not less than thirty days, as fixed by the Director in such action, the application shall be regarded as abandoned by the parties thereto, unless it be shown to the satisfaction of the Director that such delay was unavoidable.

37 C.F.R. § 1.2 sets forth, *in toto*:

> All business with the Patent and Trademark Office should be transacted in writing. The personal attendance of applicants or their attorneys or agents at the Patent and Trademark Office is unnecessary. The action of the Patent and Trademark Office will be based exclusively on the written record in the Office. No attention will be paid to any alleged oral promise, stipulation, or understanding in relation to which there is disagreement or doubt.

37 C.F.R. § 1.134 sets forth, *in toto*:

> An Office action will notify the applicant of any non-statutory or shortened statutory time period set for reply to an Office action. Unless the applicant is notified in writing that a reply is required in less than six months, a maximum period of six months is allowed.

37 C.F.R. § 1.135 sets forth, *in toto*:

> (a) If an applicant of a patent application fails to reply within the time period provided under § 1.134 and § 1.136, the application will become abandoned unless an Office action indicates otherwise.
> (b) Prosecution of an application to save it from abandonment pursuant to paragraph (a) of this section must include such complete and proper reply as the condition of the application may require (emphasis added). The admission of, or refusal to admit, any amendment after final rejection or any amendment not responsive to the last action, or any related proceedings, will not operate to save the application from abandonment.
> (c) When reply by the applicant is a bona fide attempt to advance the application to final action, and is substantially a complete reply to the non-final Office action, but consideration of some matter or compliance with some requirement has been inadvertently omitted, applicant may be given a new time period for reply under § 1.134 to supply the omission.

PROCEDURAL HISTORY AND ANALYSIS

An original petition pursuant to 37 C.F.R. § 1.181(a) was filed on April 14, 2008, in which Petitioner argued "corrected drawings were filed within the three-month period of time of the first Official Action of August 7, 2007."[2] The original petition was dismissed via the mailing of a decision on November 19, 2008, which indicated that the submission of these drawings was not relevant to the abandonment of this application.

With this renewed petition, Petitioner argues that the requirement for corrected drawings contained in the notice of December 11, 2007 was made in error, due to the fact that corrections to Figure 4 were contained in the corrected drawings filed preveniently on October 31, 2007. As such, Petitioner has suggested that he failed to comply with the requirement set forth in the notice, due to the fact that he did not agree with the same.

Petitioner's contention regarding the propriety of the requirement for corrected drawings is not well taken. **The propriety of a requirement set forth in an Office communication is not relevant to an applicant's burden to timely prosecute the application to avoid abandonment.**[3]

Put another way, this application went abandoned due to Petitioner's failure to fully respond to the notice of December 11, 2007, and the propriety of a requirement set forth therein is not relevant to the abandonment of this application.

If Applicant believed that the requirement for corrected drawings had been made in error, the proper course of action would have been to either secure the withdrawal of the notice of December 11, 2007 along with the concurrent mailing of a supplemental notice of allowance which did not contain the requirement for corrected drawings, or to submit corrected drawings in order to fully reply to the notice of December 11, 2007. However, Petitioner failed to fully respond to the notice, and as such, this application went abandoned by operation of law.

Petitioner has indicated that subsequent to his receipt of the decision on the original petition pursuant to 37 C.F.R. § 1.181, he contacted the Examiner, and the same "indicated to the

---

2 Original petition, page 1.
3 See 35 U.S.C. § 133 and 37 C.F.R. §§ 1.134 and 1.135(a) and (b), reproduced above.

undersigned counsel that it was a mistake on the part of the Patent Office to indicate that FIG. 4 was incorrect."[4]

First, Petitioner is not able to rely on this oral communication, pursuant to Rule 1.2, reproduced above in its entirety. Secondly, *assuming arguendo* that Petitioner is in a position to rely on this oral communication, the indication that the requirement for corrected drawings had been made in error is not relevant to the abandonment of this application, as this indication was made subsequent to the abandonment, and the notice of December 11, 2007 (and the requirement for corrected drawings contained therein) was not withdrawn prior to the abandonment of this application.

CONCLUSION

Pursuant to the above discussion, the record does not support a finding that the holding of abandonment should be withdrawn. As such, this petition pursuant to 37 C.F.R. § 1.181(a) must be dismissed.

The time period for filing a renewed petition is governed by 37 C.F.R. § 1.181(f). Therefore, if reconsideration of this decision is desired, any response to this decision must be submitted within **TWO MONTHS** from the mail date of this decision, and **extensions of time under 37 C.F.R. § 1.136(a) are not permitted**. The reply should include a cover letter entitled "Second Renewed Petition pursuant to 37 C.F.R. § 1.181(a)". This is not a final agency action within the meaning of 5 U.S.C § 704.

Since it does not appear that Petitioner will be able to secure the withdrawal of the holding of abandonment, **Petitioner may wish to instead seek the revival of this application, by filing a petition pursuant to 37 C.F.R. §§ 1.137(a) and/or (b)**.

Any response to this decision should indicate in a prominent manner that the attorney handling this matter is Paul Shanoski, and may be submitted by mail,[5] hand-delivery,[6] or facsimile.[7] Registered users of EFS-Web may alternatively submit a response to this decision via EFS-Web.[8]

---

4 Renewed petition, page 2.
5 Mail Stop Petition, Commissioner for Patents, United States Patent and Trademark Office, P.O. Box 1450, Alexandria, VA, 22313-1450.
6 Customer Window, Randolph Building, 401 Dulaney Street, Alexandria, VA, 22314.
7 (571) 273-8300- please note this is a central facsimile number.
8 https://sportal.uspto.gov/authenticate/authenticateuserlocalepf.html

If responding by mail, Petitioner is advised not to place the undersigned's name on the envelope. Only the information that appears in the footnote should be included - adding anything else to the address will delay the delivery of the response to the undersigned.

It is noted that the address listed on the petition differs slightly from the address of record. The application file does not indicate a change of correspondence address has been filed in this case, although the address given on the petition differs from the address of record. If Petitioner desires to receive future correspondence regarding this application, the change of correspondence address must be submitted. A courtesy copy of this decision will be mailed to Petitioner. However, all future correspondence will be directed to the address of record until such time as appropriate instructions are received to the contrary. Petitioner will not receive future correspondence related to this application unless Change of Correspondence Address, Patent Form (PTO/SB/122) is submitted for the above-identified application. For Petitioner's convenience, a blank Change of Correspondence Address, Patent Form (PTO/SB/122), may be found at http://www.uspto.gov/web/forms/sb0122.pdf.

Telephone inquiries regarding *this decision* should be directed to the undersigned at (571) 272-3225.[9]

/Paul Shanoski/
Paul Shanoski
Senior Attorney
Office of Petitions

cc: CASELLA & HESPOS LLP
274 MADISON AVENUE
SUITE 1703
NEW YORK NY 10016

---

9 Petitioner will note that all practice before the Office should be in writing, and the action of the Office will be based exclusively on the written record in the Office. See 37 C.F.R. § 1.2. As such, Petitioner is reminded that no telephone discussion may be controlling or considered authority for any of Petitioner's further action(s).

fsUNITED STATES PATENT AND TRADEMARK OFFICE

Commissioner for Patents
United States Patent and Trademark Office
P.O. Box 1450
Alexandria, VA 22313-1450
www.uspto.gov

Paper No.

CASELLA & HESPOS
274 MADISON AVENUE
NEW YORK NY 10016

COPY MAILED

JUN 09 2009

OFFICE OF PETITIONS

In re Application of	:	
Mary Fitzgerald	:	
Application No. 29/253,072	:	DECISION ON PETITION
Filed: February 1, 2006	:	PURSUANT TO
Attorney Docket No.:	:	37 C.F.R. § 1.137(B)
FITZGERALD-2	:	
Title: FLEXIBLE PLASTIC CORSAGE	:	
HOLDER BAND	:	

This is a decision on the petition filed on March 9, 2009, pursuant to 37 C.F.R. § 1.137(b), to revive the above-identified application.

This petition pursuant to 37 C.F.R. § 1.137(b) is **GRANTED**.

The above-identified application became abandoned for failure to submit drawings in a timely manner in reply to the Notice of Allowance and Issue Fee Due, mailed December 11, 2007, which set a shortened statutory period for reply of three months. No extensions of time are permitted for transmitting formal drawings.[1] Accordingly, the above-identified application became abandoned on March 12, 2008. A Notice of Abandonment was mailed on April 4, 2008.

An original petition pursuant to 37 C.F.R. § 1.181(a) was filed on April 14, 2008, and was dismissed via the mailing of a decision on November 19, 2008.

1 See MPEP § 710.02(e)(III).

A renewed petition pursuant to 37 C.F.R. § 1.181(a) was filed on December 24, 2008, and was dismissed via the mailing of a decision on February 17, 2009.

A grantable petition pursuant to 37 C.F.R. § 1.137(b) must be accompanied by:

(1) The reply required to the outstanding Office action or notice, unless previously filed;
(2) The petition fee as set forth in 37 C.F.R. § 1.17(m);
(3) A statement that the entire delay in filing the required reply from the due date for the reply until the filing of a grantable petition pursuant to this paragraph was unintentional. The Commissioner may require additional information where there is a question whether the delay was unintentional, and;
(4) Any terminal disclaimer (and fee as set forth in 37 C.F.R. § 1.20(d)) required pursuant to paragraph (d) of this section.

With this petition pursuant to 37 C.F.R. § 1.137(b), Petitioner has submitted the petition fee, a terminal disclaimer and the associated fee, and the proper statement of unintentional delay.

It is noted that corrected drawings were received on April 14, 2008.

Consequently, each of the four requirements of Rule 1.137(b) has been met.

Pursuant to this decision, the Office of Patent Publication will be notified of this decision so that the present application can be processed into a patent.

Petitioner may find it beneficial to view Private PAIR within a fortnight of the present decision to ensure that the revival has been acknowledged by the Office of Patent Publication in response to this decision. It is noted that all inquiries with regard to any failure of that change in status should be directed to the Office of Patent Publication where that change of status must be effected - **the Office of Petitions cannot effectuate a change of status.**

Telephone inquiries regarding *this decision* should be directed to the undersigned at (571) 272-3225.[2] All other inquiries concerning the status of the application should be directed to the Office of Patent Publication at 571-272-4200.

/Paul Shanoski/
Paul Shanoski
Senior Attorney
Office of Petitions

---

2 Petitioner will note that all practice before the Office should be in writing, and the action of the Office will be based exclusively on the written record in the Office. See 37 C.F.R. § 1.2. As such, Petitioner is reminded that no telephone discussion may be controlling or considered authority for any further action(s) of Petitioner.

PTO/SB/27 (05-03)
Approved for use through 04/30/2003. OMB 0651-0031
U.S. Patent and Trademark Office; U.S. DEPARTMENT OF COMMERCE
Under the Paperwork Reduction Act of 1995, no persons are required to respond to a collection of information unless it displays a valid OMB control number.

REQUEST FOR EXPEDITED EXAMINATION OF A DESIGN APPLICATION (37 CFR 1.155)

Application Number	TBD
Filing Date	February 2, 2006
First Named Inventor	Susan Diane Cessor
Title	Portion Of A Shoe Midsole
Atty Docket Number	015127.00678

113000 U.S. PTO
29/253138
020206

HAND DELIVER TO THE DESIGN GROUP DIRECTOR'S OFFICE
-or- ADDRESS TO:
MAIL STOP EXPEDITED DESIGN
COMMISSIONER FOR PATENTS
P.O. Box 1450
Alexandria, VA 22313-1450

This is a request for expedited examination of a design application under 37 CFR 1.155.

NOTE: If the Request made by this form accompanies original application papers, include form PTO/SB/18 "Design Patent Application Transmittal" or its equivalent.

Approved 2-15-06
Jacqueline M. Stone, Director
Technology Center 1700

A preexamination search was conducted. The field of search was:

D2/896, 902, 907, 908, 943, 944, 946, 947, 964, 967, 972 and 977

Related applications: Attorney Docket No. 015127.00678, filed concurrently herewith.

If not previously filed for the above-identified application, the following items required by 37 CFR 1.155 are enclosed:

Formal drawings (see 37 CFR 1.84).

The fee set forth in 37 CFR 1.17(k).

An information disclosure statement in compliance with 37 CFR 1.98.

February 2, 2006
Date

Signature

202-824-3000
Telephone Number

Darrell G. Mottley, Reg. No. 42,912
Typed or printed name

WARNING: Information on this form may become public. Credit card information should not be included on this form. Provide credit card information and authorization on PTO-2038.

This collection of information is required by 37 CFR 1.155. The information is required to obtain or retain a benefit by the public which is to file (and by the USPTO to process) an application. Confidentiality is governed by 35 U.S.C. 122 and 37 CFR 1.14. This collection is estimated to take 6 minutes to complete, including gathering, preparing, and submitting the completed application form to the USPTO. Time will vary depending upon the individual case. Any comments on the amount of time you require to complete this form and/or suggestions for reducing this burden, should be sent to the Chief Information Officer, U.S. Patent and Trademark Office, U.S. Department of Commerce, P.O. Box 1450, Alexandria, VA 22313-1450. DO NOT SEND FEES OR COMPLETED FORMS TO THIS ADDRESS. SEND TO: Mail Stop Expedited Design, Commissioner for Patents, P.O. Box 1450, Alexandria, VA 22313-1450.

If you need assistance in completing the form, call 1-800-PTO-9199 and select option 2.

02/03/2006 LWONDIM1 00000025 190733 29253138
04 FC:1802 900.00 DA

PTO/SB/27 (05-03)
Approved for use through 04/30/2003: OMB 0651-0031
U.S. Patent and Trademark Office; U.S. DEPARTMENT OF COMMERCE
Under the Paperwork Reduction Act of 1995, no persons are required to respond to a collection of information unless it displays a valid OMB control number.

REQUEST FOR EXPEDITED EXAMINATION OF A DESIGN APPLICATION (37 CFR 1.155)

Application Number	TBD
Filing Date	Herewith
First Named Inventor	Jane Savage
Title	PORTION OF A SHOE UPPER
Atty Docket Number	015127.00662

10086 U.S. PTO
29253139
020206

HAND DELIVER TO THE DESIGN GROUP DIRECTOR'S OFFICE
-or- ADDRESS TO:
MAIL STOP EXPEDITED DESIGN
COMMISSIONER FOR PATENTS
P.O. Box 1450
Alexandria, VA 22313-1450

This is a request for expedited examination of a design application under 37 CFR 1.155.

NOTE: If the Request made by this form accompanies original application papers, include form PTO/SB/18 "Design Patent Application Transmittal" or its equivalent.

Approved 2-15-06
Jacqueline M. Stone
Jacqueline M. Stone, Director
Technology Center 1700

A preexamination search was conducted. The field of search was:

D2/ 896, 902, 907, 908, 943, 944, 969, 972, 973, and 974

Related applications: _____

If not previously filed for the above-identified application, the following items required by 37 CFR 1.155 are enclosed:

Formal drawings (see 37 CFR 1.84).

The fee set forth in 37 CFR 1.17(k).

An information disclosure statement in compliance with 37 CFR 1.98.

February 2, 2006
Date

Signature

202-824-3000
Telephone Number

Darrell G. Mottley, Reg. No. 42,912
Typed or printed name

WARNING: Information on this form may become public. Credit card information should not be included on this form. Provide credit card information and authorization on PTO-2038.

This collection of information is required by 37 CFR 1.155. The information is required to obtain or retain a benefit by the public which is to file (and by the USPTO to process) an application. Confidentiality is governed by 35 U.S.C. 122 and 37 CFR 1.14. This collection is estimated to take 6 minutes to complete, including gathering, preparing, and submitting the completed application form to the USPTO. Time will vary depending upon the individual case. Any comments on the amount of time you require to complete this form and/or suggestions for reducing this burden, should be sent to the Chief Information Officer, U.S. Patent and Trademark Office, U.S. Department of Commerce, P.O. Box 1450, Alexandria, VA 22313-1450. DO NOT SEND FEES OR COMPLETED FORMS TO THIS ADDRESS. SEND TO: **Mail Stop Expedited Design, Commissioner for Patents, P.O. Box 1450, Alexandria, VA 22313-1450.**

If you need assistance in completing the form, call 1-800-PTO-9199 and select option 2.

02/03/2006 LWONDIM1 00000026 190733 29253139
04 FC:1802 900.00 DA

PTO/SB/27 (05-03)
Approved for use through 04/30/2003. OMB 0651-0031
U.S. Patent and Trademark Office; U.S. DEPARTMENT OF COMMERCE
Under the Paperwork Reduction Act of 1995, no persons are required to respond to a collection of information unless it displays a valid OMB control number.

REQUEST FOR EXPEDITED EXAMINATION OF A DESIGN APPLICATION (37 CFR 1.155)

Application Number	TO BE ASSIGNED
Filing Date	February 2, 2006
First Named Inventor	Leo S. Chang
Title	Portion Of A Shoe Upper
Atty Docket Number	015127.00669

110036 U.S. PTO
29253140
020206

HAND DELIVER TO THE DESIGN GROUP DIRECTOR'S OFFICE
-or- ADDRESS TO:
MAIL STOP EXPEDITED DESIGN
COMMISSIONER FOR PATENTS
P.O. Box 1450
Alexandria, VA 22313-1450

This is a request for expedited examination of a design application under 37 CFR 1.155.

NOTE: If the Request made by this form accompanies original application papers, include form PTO/SB/18 "Design Patent Application Transmittal" or its equivalent.

Approved 2-15-06
Jacqueline M. Stone
Jacqueline M. Stone, Director
Technology Center 1700

A preexamination search was conducted. The field of search was:

D2/896, 902, 907, 908, 943, 944, 945, 946, 969, 972, 973, 974 and 977

Related applications: _____

If not previously filed for the above-identified application, the following items required by 37 CFR 1.155 are enclosed:

Formal drawings (see 37 CFR 1.84).

The fee set forth in 37 CFR 1.17(k).

An information disclosure statement in compliance with 37 CFR 1.98.

February 2, 2006
Date

Signature

202-824-3000
Telephone Number

David R. Gerk-Registration No. 56,901
Typed or printed name

WARNING: Information on this form may become public. Credit card information should not be included on this form. Provide credit card information and authorization on PTO-2038.

This collection of information is required by 37 CFR 1.155. The information is required to obtain or retain a benefit by the public which is to file (and by the USPTO to process) an application. Confidentiality is governed by 35 U.S.C. 122 and 37 CFR 1.14. This collection is estimated to take 6 minutes to complete, including gathering, preparing, and submitting the completed application form to the USPTO. Time will vary depending upon the individual case. Any comments on the amount of time you require to complete this form and/or suggestions for reducing this burden, should be sent to the Chief Information Officer, U.S. Patent and Trademark Office, U.S. Department of Commerce, P.O. Box 1450, Alexandria, VA 22313-1450. DO NOT SEND FEES OR COMPLETED FORMS TO THIS ADDRESS. SEND TO: Mail Stop Expedited Design, Commissioner for Patents, P.O. Box 1450, Alexandria, VA 22313-1450.

If you need assistance in completing the form, call 1-800-PTO-9199 and select option 2.

02/03/2006 LWONDTH1 00000027 190733 29253140
04 FC:1802 900.00 DA

PTO/SB/27 (05-03)
Approved for use through 04/30/2003. OMB 0651-0031
U.S. Patent and Trademark Office; U.S. DEPARTMENT OF COMMERCE
Under the Paperwork Reduction Act of 1995, no persons are required to respond to a collection of information unless it displays a valid OMB control number.

REQUEST FOR EXPEDITED EXAMINATION OF A DESIGN APPLICATION (37 CFR 1.155)

Application Number	TO BE ASSIGNED
Filing Date	February 2, 2006
First Named Inventor	Andreas Harlow
Title	Portion Of A Shoe Upper
Atty Docket Number	015127.00672

HAND DELIVER TO THE DESIGN GROUP DIRECTOR'S OFFICE
-or- ADDRESS TO:
MAIL STOP EXPEDITED DESIGN
COMMISSIONER FOR PATENTS
P.O. Box 1450
Alexandria, VA 22313-1450

113000 U.S. PTO
29/253141
020206

This is a request for expedited examination of a design application under 37 CFR 1.155.

NOTE: If the Request made by this form accompanies original application papers, include form PTO/SB/18 "Design Patent Application Transmittal" or its equivalent.

Approved 2-15-06
Jacqueline M. Stone
Jacqueline M. Stone, Director
Technology Center 1700

A preexamination search was conducted. The field of search was:

Class D2/896, 902, 907, 908, 943, 944, 945, 946, 969, 972, 973, 974 and 977

Related applications: _____

If not previously filed for the above-identified application, the following items required by 37 CFR 1.155 are enclosed:

Formal drawings (see 37 CFR 1.84).

The fee set forth in 37 CFR 1.17(k).

An information disclosure statement in compliance with 37 CFR 1.98.

February 2, 2006
Date

Signature

202-824-3000
Telephone Number

David R. Gerk-Registration No. 56,901
Typed or printed name

WARNING: Information on this form may become public. Credit card information should not be included on this form. Provide credit card information and authorization on PTO-2038.

This collection of information is required by 37 CFR 1.155. The information is required to obtain or retain a benefit by the public which is to file (and by the USPTO to process) an application. Confidentiality is governed by 35 U.S.C. 122 and 37 CFR 1.14. This collection is estimated to take 6 minutes to complete, including gathering, preparing, and submitting the completed application form to the USPTO. Time will vary depending upon the individual case. Any comments on the amount of time you require to complete this form and/or suggestions for reducing this burden, should be sent to the Chief Information Officer, U.S. Patent and Trademark Office, U.S. Department of Commerce, P.O. Box 1450, Alexandria, VA 22313-1450. DO NOT SEND FEES OR COMPLETED FORMS TO THIS ADDRESS. SEND TO: Mail Stop Expedited Design, Commissioner for Patents, P.O. Box 1450, Alexandria, VA 22313-1450.

If you need assistance in completing the form, call 1-800-PTO-9199 and select option 2.

02/03/2006 LWONDIM1 00000024 190733 29253141
04 FC:1602 900.00 DA

PTO/SB/27 (09-04)
Approved for use through 07/31/2006. OMB 0651-0031
U.S. Patent and Trademark Office; U.S DEPARTMENT OF COMMERCE
Under the Paperwork Reduction ACT of 1995, no persons are required to respond to collection of information unless it displays a valid OMB control number.

REQUEST FOR EXPEDITED EXAMINATION OF A DESIGN APPLICATION (37 CFR 1.155)

Application Number	TBA
Filing Date	February 2, 2006
First Named Inventor	Kenneth Link
Title	Portion of a Shoe Upper
Atty Docket Number	015127.00680

110696 U.S. PTO
29/253142
020206

ADDRESS TO:

MAIL STOP EXPEDITED DESIGN
COMMISSIONER FOR PATENTS
P.O. Box 1450
Alexandria, VA 22313-1450

This is a request for expedited examination of a design application under 37 CFR 1.155.

NOTE: If the Request made by this form accompanies original application papers, include form PTO/SB/18 "Design Patent Application Transmittal" or its equivalent.

A preexamination search was conducted. The field of search was:

D2/896, 902, 907, 908, 943, 944, 969, 972, 973, 974

Approved 2-15-06
Jacqueline M. Stone
Jacqueline M. Stone, Director
Technology Center 1700

Related applications:

If not previously filed for the above-identified application, the following items required by 37 CFR 1.155 are enclosed:

- Formal drawings (see 37 CFR 1.84).
- The fee set forth in 37 CFR 1.17(k).
- An information disclosure statement in compliance with 37 CFR 1.98.

Signature

February 2, 2006
Date

H. Wayne Porter
Typed or printed name

42,084
Registration Number, if applicable

202-824-3000
Telephone Number

WARNING: Information on this form may become public. Credit card information should not be included on this form. Provide credit card information and authorization on PTO-2038.

This collection of information is required by 37 CFR 1.155. The information is required to obtain or retain a benefit by the public which is to file (and by the USPTO to process) an application. Confidentiality is governed by 35 U.S.C. 122 and 37 CFR 1.11 and 1.14. This collection is estimated to take 6 minutes to complete, including gathering, preparing, and submitting the completed application form to the USPTO. Time will vary depending upon the individual case. Any comments on the amount of time you require to complete this form and/or suggestions for reducing this burden, should be sent to the Chief Information Officer, U.S. Patent and Trademark Office, U.S. Department of Commerce, P.O. Box 1450, Alexandria, VA 22313-1450. DO NOT SEND FEES OR COMPLETED FORMS TO THIS ADDRESS. SEND TO: Commissioner for Patents, P.O. Box 1450, Alexandria, VA 22313-1450.

If you need assistance in completing the form, call 1-800-PTO-9199 and select option 2.

02/03/2006 LWONDIM1 00000023 190733 29253142
04 FC:1802 900.00 DA

PTO/SB/27 (05-03)
Approved for use through 04/30/2003. OMB 0651-0031
U.S. Patent and Trademark Office; U.S. DEPARTMENT OF COMMERCE
Under the Paperwork Reduction Act of 1995, no persons are required to respond to a collection of information unless it displays a valid OMB control number.

REQUEST FOR EXPEDITED EXAMINATION OF A DESIGN APPLICATION (37 CFR 1.155)

Application Number	TBD
Filing Date	February 2, 2006
First Named Inventor	Susan Diane Cessor
Title	Portion Of A Shoe Midsole
Atty Docket Number	015127.00676

113000 U.S.PTO
29/253143
020206

HAND DELIVER TO THE DESIGN GROUP DIRECTOR'S OFFICE
-or- ADDRESS TO:
MAIL STOP EXPEDITED DESIGN
COMMISSIONER FOR PATENTS
P.O. Box 1450
Alexandria, VA 22313-1450

This is a request for expedited examination of a design application under 37 CFR 1.155.

NOTE: If the Request made by this form accompanies original application papers, include form PTO/SB/18 "Design Patent Application Transmittal" or its equivalent.

A preexamination search was conducted. The field of search was:

D2/896, 902, 907, 908, 943, 944, 946, 947, 964, 967, 972 and 977

Approved 2-15-06
Jacqueline M. Stone
Jacqueline M. Stone, Director
Technology Center 1700

Related applications: Attorney Docket No. 015127.00676; Filed concurrently herewith.

If not previously filed for the above-identified application, the following items required by 37 CFR 1.155 are enclosed:

Formal drawings (see 37 CFR 1.84).

The fee set forth in 37 CFR 1.17(k).

An information disclosure statement in compliance with 37 CFR 1.98.

February 2, 2006
Date

Signature

202-824-3000
Telephone Number

Darrell G. Mottley, Reg. No. 42,912
Typed or printed name

WARNING: Information on this form may become public. Credit card information should not be included on this form. Provide credit card information and authorization on PTO-2038.

This collection of information is required by 37 CFR 1.155. The information is required to obtain or retain a benefit by the public which is to file (and by the USPTO to process) an application. Confidentiality is governed by 35 U.S.C. 122 and 37 CFR 1.14. This collection is estimated to take 6 minutes to complete, including gathering, preparing, and submitting the completed application form to the USPTO. Time will vary depending upon the individual case. Any comments on the amount of time you require to complete this form and/or suggestions for reducing this burden, should be sent to the Chief Information Officer, U.S. Patent and Trademark Office, U.S. Department of Commerce, P.O. Box 1450, Alexandria, VA 22313-1450. DO NOT SEND FEES OR COMPLETED FORMS TO THIS ADDRESS. SEND TO: Mail Stop Expedited Design, Commissioner for Patents, P.O. Box 1450, Alexandria, VA 22313-1450.

If you need assistance in completing the form, call 1-800-PTO-9199 and select option 2.

02/03/2006 LWONDIR1 00000022 190733 29253143
04 FC:1802 900.00 DA

OIPE IAP28
MAR 3 0 2007
PATENT & TRADEMARK OFFICE

Certificate of Mailing

I hereby certify that this paper is being deposited via U.S. fist class mail in an enveloped with sufficient postage addressed to Mail Stop RCE, Commissioner for Patents, Box 1450, Alexandria, VA 22313-1450 on this 27 day of March, 2007.

Patrice Simpson

PATENT

IN THE UNITED STATES PATENT AND TRADEMARK OFFICE

In re application of:	:	John Blomstrom
Title	:	KEY
Serial No.	:	29/253,201
Filed:	:	02/02/2006
Confirmation No.	:	1931
Customer No.:	:	58822
Attorney Docket No.	:	27475/08970

Mail Stop RCE
Commissioner for Patents
P.O. Box 1450
Alexandria, VA 22313-1450

PETITION FOR WITHDRAWAL FROM ISSUE--ISSUE FEE PAID--TO PERMIT CONSIDERATION OF A REQUEST FOR CONTINUED EXAMINATION (RCE) HAVING AN INFORMATION DISCLOSURE STATEMENT (37 C.F.R. § 1.313(c))

Dear Sir:

Applicant hereby petitions for the withdrawal of the above-referenced application from issue. The issue fee for this case was paid on 01/23/2007.

This request is made under 37 C.F.R. § 1.313(c)(2) for withdrawal from issue of this application is for consideration of a Request for Examination ("RCE") having an Information Disclosure Statement ("IDS"). An RCE having an IDS is being filed with this Petition. This

04/02/2007 HDESTA1 00000026 29253201
02 FC:1464 130.00 OP

Petition is being requested so that the PTO will be able to consider the reference in the IDS accompanying the RCE.

Applicant has enclosed herewith a check to cover fees for the petition ($130.00), and the RCE ($790.00), as set forth in 37 C.F.R. §1.17(e), (h).

If any additional fees are due with this filing, please charge our Deposit Account No. 030172.

Respectfully submitted,

Dated: March 27, 2007

WA Johnston

William A. Johnston, Reg. No. 47,687
(216) 622-8576
Customer No. 58822

UNITED STATES PATENT AND TRADEMARK OFFICE

Commissioner for Patents
United States Patent and Trademark Office
P.O. Box 1450
Alexandria, VA 22313-1450
www.uspto.gov

NIXON & VANDERHYE, PC
901 NORTH GLEBE ROAD, 11TH FLOOR
ARLINGTON VA 22203

MAILED

JUN 10 2009

OFFICE OF PETITIONS

In re Application of :
D. Francisco Salva :
Application No. 29/253,236 :
Filed: February 3, 2006 :
Attorney Docket No. 5323-2 :

ON PETITION

This is a decision on the petition under the unintentional provisions of 37 CFR 1.137(b), filed February 23, 2009, to revive the above-identified application.

The petition is **DISMISSED**.

Any request for reconsideration of this decision must be submitted within TWO (2) MONTHS from the mail date of this decision. Extensions of time under 37 CFR 1.136(a) are permitted. The reconsideration request should include a cover letter entitled "Renewed Petition under 37 CFR 1.137(b)." This is **not** a final agency action within the meaning of 5 U.S.C. § 704.

The application became abandoned for failure to timely reply within the meaning of 37 CFR 1.113 to the final Office action, mailed April 22, 2008, which set a shortened statutory period for reply of three (3) months. A two (2) month extension of time under the provisions of 37 CFR 1.136(a) was obtained. Accordingly, the application became abandoned on September 23, 2008.

A grantable petition under 37 CFR 1.137(b) must be accompanied by: (1) the required reply, unless previously filed; (2) the petition fee as set forth in 37 CFR 1.17(m); (3) a statement that the entire delay in filing the required reply from the due date for the reply until the filing of a grantable petition pursuant to 37 CFR 1.137(b) was unintentional; and (4) any terminal disclaimer (and fee as set forth in 37 CFR 1.20(d)) required by 37 CFR 1.137(d). Where there is a question as to whether either the abandonment or the delay in filing a petition under 37 CFR 1.137 was unintentional, the Director may require additional information. See MPEP 711.03(c)(II)(C) and (D). The instant petition lacks item(s) (1) and (4).

As to item 1:

The proposed reply required for consideration of a petition to revive must be a Notice of Appeal (and appeal fee required by 37 CFR 41.20(b)(2)), an amendment that *prima facie* places the application in condition for allowance, a Request for Continued Examination (RCE) and submission (37 CFR 1.114), or the filing of a continuing application under 37 CFR 1.53(b). *See* MPEP 711.03(c)(III)(A)(2). Since the amendment submitted on February 23, 2009, does not *prima facie* place the application in condition for allowance, the reply required must be a Notice of Appeal (and appeal fee), RCE, or the filing of a continuing application under 37 CFR 1.53(b). A copy of the Advisory Acton explaining why the amendment was not accepted is enclosed with this decision.

As to item 4:

Since the above-identified application is a design application it requires a terminal disclaimer dedicating to the public a terminal part of the term of any patent granted on the application or any patent granted on any continuing application that contains a specific reference under 35 U.S.C. 120, 121, or 365(c) to the application. The period to be disclaimed will be a terminal part of the patent to be granted equivalent to the period of abandonment. The period of abandonment will be computed to be the number of months from the date of abandonment to the date of filing a grantable petition. A terminal disclaimer fee of $140 for large entity is required. If the terminal disclaimer is signed by an assignee, the assignee must comply with the requirements of 37 CFR 3.73(b).

An extension of time under 37 CFR 1.136 must be filed prior to the expiration of the maximum extendable period for reply. *See* In re Application of S., 8 USPQ2d 1630, 1631 (Comm'r Pats. 1988). Since the $325 extension of time fee submitted with the petition on February 23, 2009 was subsequent to the maximum extendable period for reply, petitioner may request a refund of this fee by writing to the following address: Mail Stop 16, Commissioner for Patents, P. O. Box 1450, Alexandria, VA 22313-1450. A copy of this decision should accompany petitioner's request.

The application file does not indicate a change of address has been filed in this case, although the address given on the petition differs from the address of record. A change of address should be filed in this case in accordance with MPEP 601.03. A courtesy copy of this decision is being mailed to the address noted on the petition. However, until otherwise instructed, all future correspondence regarding this application will be mailed solely to the address of record.

Further correspondence with respect to this matter should be addressed as follows:

By Mail: Mail Stop PETITION
Commissioner for Patents
P. O. Box 1450
Alexandria, VA 22313-1450

By hand: U. S. Patent and Trademark Office
Customer Service Window, Mail Stop Petitions
Randolph Building
401 Dulany Street
Alexandria, VA 22314

The centralized facsimile number is **(571) 273-8300.**

Telephone inquiries concerning this decision should be directed to JoAnne Burke at (571) 272-4584.

Ramesh Krishnamurthy

Ramesh Krishnamurthy
Petitions Examiner
Office of Petitions

Attachment: Advisory Action

cc: **John C. Eisenhart**
4316 Brookside Drive
Alexandria, VA 22312

Advisory Action Before the Filing of an Appeal Brief	Application No. 29/253,236	Applicant(s) SALVA, D. FRANCISCO	
	Examiner DAVID G. MULLER	Art Unit 2914	

--The MAILING DATE of this communication appears on the cover sheet with the correspondence address --

THE REPLY FILED 23 February 2009 FAILS TO PLACE THIS APPLICATION IN CONDITION FOR ALLOWANCE.

1. ☒ The reply was filed after a final rejection, but prior to or on the same day as filing a Notice of Appeal. To avoid abandonment of this application, applicant must timely file one of the following replies: (1) an amendment, affidavit, or other evidence, which places the application in condition for allowance; (2) a Notice of Appeal (with appeal fee) in compliance with 37 CFR 41.31; or (3) a Request for Continued Examination (RCE) in compliance with 37 CFR 1.114. The reply must be filed within one of the following time periods:
   a) ☒ The period for reply expires 3 months from the mailing date of the final rejection.
   b) ☐ The period for reply expires on: (1) the mailing date of this Advisory Action, or (2) the date set forth in the final rejection, whichever is later. In no event, however, will the statutory period for reply expire later than SIX MONTHS from the mailing date of the final rejection.

   Examiner Note: If box 1 is checked, check either box (a) or (b). ONLY CHECK BOX (b) WHEN THE FIRST REPLY WAS FILED WITHIN TWO MONTHS OF THE FINAL REJECTION. See MPEP 706.07(f).

Extensions of time may be obtained under 37 CFR 1.136(a). The date on which the petition under 37 CFR 1.136(a) and the appropriate extension fee have been filed is the date for purposes of determining the period of extension and the corresponding amount of the fee. The appropriate extension fee under 37 CFR 1.17(a) is calculated from: (1) the expiration date of the shortened statutory period for reply originally set in the final Office action; or (2) as set forth in (b) above, if checked. Any reply received by the Office later than three months after the mailing date of the final rejection, even if timely filed, may reduce any earned patent term adjustment. See 37 CFR 1.704(b).

NOTICE OF APPEAL

2. ☐ The Notice of Appeal was filed on _____. A brief in compliance with 37 CFR 41.37 must be filed within two months of the date of filing the Notice of Appeal (37 CFR 41.37(a)), or any extension thereof (37 CFR 41.37(e)), to avoid dismissal of the appeal. Since a Notice of Appeal has been filed, any reply must be filed within the time period set forth in 37 CFR 41.37(a).

AMENDMENTS

3. ☒ The proposed amendment(s) filed after a final rejection, but prior to the date of filing a brief, will not be entered because
   (a) ☐ They raise new issues that would require further consideration and/or search (see NOTE below);
   (b) ☒ They raise the issue of new matter (see NOTE below);
   (c) ☐ They are not deemed to place the application in better form for appeal by materially reducing or simplifying the issues for appeal; and/or
   (d) ☐ They present additional claims without canceling a corresponding number of finally rejected claims.

   NOTE: *See continuation sheet*. (See 37 CFR 1.116 and 41.33(a)).
4. ☐ The amendments are not in compliance with 37 CFR 1.121. See attached Notice of Non-Compliant Amendment (PTOL-324).
5. ☐ Applicant's reply has overcome the following rejection(s): _____.
6. ☐ Newly proposed or amended claim(s) _____ would be allowable if submitted in a separate, timely filed amendment canceling the non-allowable claim(s).
7. ☐ For purposes of appeal, the proposed amendment(s): a) ☐ will not be entered, or b) ☐ will be entered and an explanation of how the new or amended claims would be rejected is provided below or appended.
   The status of the claim(s) is (or will be) as follows:
   Claim(s) allowed: _____.
   Claim(s) objected to: _____.
   Claim(s) rejected: _____.
   Claim(s) withdrawn from consideration: _____.

AFFIDAVIT OR OTHER EVIDENCE

8. ☐ The affidavit or other evidence filed after a final action, but before or on the date of filing a Notice of Appeal will not be entered because applicant failed to provide a showing of good and sufficient reasons why the affidavit or other evidence is necessary and was not earlier presented. See 37 CFR 1.116(e).
9. ☐ The affidavit or other evidence filed after the date of filing a Notice of Appeal, but prior to the date of filing a brief, will not be entered because the affidavit or other evidence failed to overcome all rejections under appeal and/or appellant fails to provide a showing a good and sufficient reasons why it is necessary and was not earlier presented. See 37 CFR 41.33(d)(1).
10. ☐ The affidavit or other evidence is entered. An explanation of the status of the claims after entry is below or attached.

REQUEST FOR RECONSIDERATION/OTHER

11. ☐ The request for reconsideration has been considered but does NOT place the application in condition for allowance because: _____.
12. ☐ Note the attached Information *Disclosure Statement*(s). (PTO/SB/08) Paper No(s). _____
13. ☐ Other: _____.

T. CHASE NELSON
SPE, ART UNIT 2914

Continuation sheet (PTO-303)

Continuation of 3 NOTE: The shape and form of the rifle stock in Figs.4 and 5 introduce new matter not disclosed previously. The response does not fulfill the requirements of the office action of 8/11/2008 or match the proposed drawings faxed on 1/13/09 in response to office action of 12/3/2008. It is recommended that the proposed drawings faxed 1/13/09 be submitted in response to this advisory action.

UNITED STATES PATENT AND TRADEMARK OFFICE

Commissioner for Patents
United States Patent and Trademark Office
P.O. Box 1450
Alexandria, VA 22313-1450
www.uspto.gov

TOWNSEND AND TOWNSEND AND CREW, LLP
TWO EMBARCADERO CENTER
EIGHTH FLOOR
SAN FRANCISCO CA 94111-3834

COPY MAILED

DEC 1 7 2009

OFFICE OF PETITIONS

In re Application of	:	
D. Francisco Salva	:	
Application No. 29/253,236	:	DECISION ON PETITION
Filed: February 3, 2006	:	
Attorney Docket No. 5326-2	:	

This is a decision on the renewed petition under the unintentional provisions of 37 CFR 1.137(b), filed August 4, 2009, to revive the above-identified application.

The petition is **GRANTED**.

The application became abandoned for failure to timely reply within the meaning of 37 CFR 1.113 to the final Office action, mailed April 22, 2008, which set a shortened statutory period for reply of three (3) months. No extensions of time under the provisions of 37 CFR 1.136(a) were obtained. Accordingly, the application became abandoned on September 23, 2008.

The petition satisfies the requirements of 37 CFR 1.137(b) in that petitioner has supplied (1) the reply in the form of an amendment and replacement drawing, (2) the petition fee of $1,620; and (3) a proper statement of unintentional delay and (4) a terminal disclaimer and fee as required by 37 CFR 1.137(d).

The terminal disclaimer is accepted and has been made of record. Any continuing application filed from this application must contain a copy of the terminal disclaimer. The copy of the terminal disclaimer must be filed with a cover letter requesting the terminal disclaimer be recorded on the continuing application. A copy of this decision should be attached to the cover letter.

Due to the approval of the Power of Attorney filed on August 5, 2009, the address given on the petition differs from the address of record. A courtesy copy of this decision is being mailed to the address noted on the petition. However, until otherwise instructed, all future correspondence regarding this application will be mailed solely to the address of record

Telephone inquiries concerning this decision should be directed to JoAnne Burke at (571)272-4584.

This application is being referred to Technology Center AU 2914 for further processing in accordance with this decision on petition.

JoAnne Burke
Petitions Examiner
Office of Petitions

cc: John C. Eisenhart
901 North Glebe Rd., Suite 1100
Arlington, VA 22203

UNITED STATES PATENT AND TRADEMARK OFFICE

COMMISSIONER FOR PATENTS
UNITED STATES PATENT AND TRADEMARK OFFICE
P.O. BOX 1450
ALEXANDRIA, VA 22313-1450
www.uspto.gov

Paper No.

BIRCH STEWART KOLASCH & BIRCH
PO BOX 747
FALLS CHURCH VA 22040-0747

COPY MAILED

JAN 28 2008

OFFICE OF PETITIONS

In re Application of	:	
Kume et al.	:	DECISION ON
Application No. 29/253,262	:	PETITION
Filed: February 3, 2006	:	
Atty Docket No. 1609-0140PUS1	:	

This is a decision on the "PETITION UNDER 37 C.F.R. § 1.181 TO WITHDRAW THE HOLDING OF ABANDONMENT" filed September 24, 2007.

The above-identified application became abandoned for failure to timely pay the issue fee within the three-month statutory period set in the Notice of Allowance and Fee(s) Due mailed April 5, 2007. This period is not extendable. No reply having been received, the above-identified application became abandoned on July 6, 2007. A courtesy Notice of Abandonment was mailed on August 16, 2007.

The instant petition was timely filed within two months of the mailing of the Notice of Abandonment. Petitioner maintains that the Notice of Allowance was never received by the offices of the attorney of record and a search of the file jacket for the present application and the firm docketing records reveals that the Office action of April 5, 2007 was never received. Petitioner states that the correspondence of record was mailed to previous counsel and was never received in the offices of Birch, Stewart, Kolasch & Birch LLP. In support thereof, petitioner submits copies of the file jacket and the docket sheets of the Birch law firm for the due date of July 5, 2007.

Petitioner's arguments and evidence have been considered and found persuasive that withdrawal of the holding of abandonment is warranted. A review of the record reveals that a Power of Attorney and change of correspondence address was filed on April

4, 2007. (Notification of the acceptance of the change of power of attorney was mailed on May 7, 2007). However, the Office action was mailed to the prior counsel. Further, the petition includes the required showing of non-receipt.

In view thereof, the notice of abandonment mailed August 16, 2007 and the holding of abandonment are hereby **WITHDRAWN**.

The petition under § 1.181 is **GRANTED**.

No fee is required on petition under § 1.181.

Technology Center AU 2911 has been advised of this decision. The application file is, thereby, forwarded to the Technology Center's technical support staff to withdraw the holding of abandonment and for re-mailing of the Notice of Allowance (and Notice of Allowability) mailed April 5, 2007 and for restarting of the period for reply.

Telephone inquiries related to this decision should be directed to the undersigned at (571) 272-3219.

Nancy Johnson
Senior Petitions Attorney
Office of Petitions

PTO/SB/27 (09-04)
Approved for use through 07/31/2006. OMB 0651-0031
U.S. Patent and Trademark Office; U.S. DEPARTMENT OF COMMERCE
Under the Paperwork Reduction Act of 1995, no persons are required to respond to a collection of information unless it displays a valid OMB control number.

REQUEST FOR EXPEDITED EXAMINATION OF A DESIGN APPLICATION (37 CFR 1.155)

Application Number	TBD
Filing Date	February 3, 2006
First Named Inventor	Martijn E. Van Tilburg et al.
Title	Icon For A Portion Of A Display Screen
Atty Docket Number	013797.01298

ADDRESS TO:
MAIL STOP EXPEDITED DESIGN
COMMISSIONER FOR PATENTS
P.O. Box 1450
Alexandria, VA 22313-1450

113000 U.S. PTO
29/253275
020306

This is a request for expedited examination of a design application under 37 CFR 1.155.

NOTE: If the Request made by this form accompanies original application papers, include form PTO/SB/18 "Design Patent Application Transmittal" or its equivalent.

Approved 2-15-06
Jacqueline M. Stone
Jacqueline M. Stone, Director
Technology Center 1700

A preexamination search was conducted. The field of search was:

Class D14 (subclasses 485, 486, 487, 488, 489, 490, 491, 492, 493, 494, 495); Class D18 (subclasses 24, 25, 26, 27, 28, 29, 30, 31, 32, 33); Class D19 (subclasses 6, 7); Class D20 (subclasses 11, 18); Class D21 (subclasses 324, 325, 326, 327, 328, 329, 330, 331, 332, 333); Class 345 (subclasses 683, 902), Class 715 (subclasses 700-726, 762-867, 973-977)

Related applications: _____

If not previously filed for the above-identified application, the following items required by 37 CFR 1.155 are enclosed:
- Formal drawings (see 37 CFR 1.84).
- The fee set forth in 37 CFR 1.17(k).
- An information disclosure statement in compliance with 37 CFR 1.98.

Signature	February 3, 2006 Date
John M. Fleming Typed or printed name	56,536 Registration Number, if applicable
(202) 824-3000 Telephone Number	

WARNING: Information on this form may become public. Credit card information should not be included on this form. Provide credit card information and authorization on PTO-2038.

This collection of information is required by 37 CFR 1.155. The information is required to obtain or retain a benefit by the public which is to file (and by the USPTO to process) an application. Confidentiality is governed by 35 U.S.C. 122 and 37 CFR 1.11 and 1.14. This collection is estimated to take 6 minutes to complete, including gathering, preparing, and submitting the completed application form to the USPTO. Time will vary depending upon the individual case. Any comments on the amount of time you require to complete this form and/or suggestions for reducing this burden, should be sent to the Chief Information Officer, U.S. Patent and Trademark Office, U.S. Department of Commerce, P.O. Box 1450, Alexandria, VA 22313-1450. DO NOT SEND FEES OR COMPLETED FORMS TO THIS ADDRESS. SEND TO: Mail Stop Expedited Design, Commissioner for Patents, P.O. Box 1450, Alexandria, VA 22313-1450.
If you need assistance in completing the form, call 1-800-PTO-9199 and select option 2.

02/06/2006 LMONDIM1 00000090 190733 29253275
04 FC:1802 900.00 DA

PTO/SB/27 (05-03)
Approved for use through 04/30/2003. OMB 0651-0031
U.S. Patent and Trademark Office; U.S. DEPARTMENT OF COMMERCE
Under the Paperwork Reduction Act of 1995, no persons are required to respond to a collection of information unless it displays a valid OMB control number.

REQUEST FOR EXPEDITED EXAMINATION OF A DESIGN APPLICATION (37 CFR 1.155)

Application Number	TO BE ASSIGNED
Filing Date	February 3, 2006
First Named Inventor	Bo Lupo
Title	Portion Of A Shoe Midsole
Atty Docket Number	015127.00694

118000 U.S. PTO
29725327 6
020306

HAND DELIVER TO THE DESIGN GROUP DIRECTOR'S OFFICE
-or- ADDRESS TO:
MAIL STOP EXPEDITED DESIGN
COMMISSIONER FOR PATENTS
P.O. Box 1450
Alexandria, VA 22313-1450

This is a request for expedited examination of a design application under 37 CFR 1.155.

NOTE: If the Request made by this form accompanies original application papers, include form PTO/SB/18 "Design Patent Application Transmittal" or its equivalent.

A preexamination search was conducted. The field of search was:

Class D2/896, 902, 907, 908, 943, 944, 946, 947, 964, 967, 972 and 977

Related applications: ____

If not previously filed for the above-identified application, the following items required by 37 CFR 1.155 are enclosed:

Formal drawings (see 37 CFR 1.84).

The fee set forth in 37 CFR 1.17(k).

An information disclosure statement in compliance with 37 CFR 1.98.

4-11-06
Approved
Jacqueline M. Stone
Jacqueline M. Stone, Director
Technology Center 1700

February 3, 2006
Date

Signature

202-824-3000
Telephone Number

David R. Gerk-Registration No. 56,901
Typed or printed name

WARNING: Information on this form may become public. Credit card information should not be included on this form. Provide credit card information and authorization on PTO-2038.

This collection of information is required by 37 CFR 1.155. The information is required to obtain or retain a benefit by the public which is to file (and by the USPTO to process) an application. Confidentiality is governed by 35 U.S.C. 122 and 37 CFR 1.14. This collection is estimated to take 6 minutes to complete, including gathering, preparing, and submitting the completed application form to the USPTO. Time will vary depending upon the individual case. Any comments on the amount of time you require to complete this form and/or suggestions for reducing this burden, should be sent to the Chief Information Officer, U.S. Patent and Trademark Office, U.S. Department of Commerce, P.O. Box 1450, Alexandria, VA 22313-1450. DO NOT SEND FEES OR COMPLETED FORMS TO THIS ADDRESS. SEND TO: Mail Stop Expedited Design, Commissioner for Patents, P.O. Box 1450, Alexandria, VA 22313-1450.

If you need assistance in completing the form, call 1-800-PTO-9199 and select option 2.

02/06/2006 LWONDIM1 00000091 190733 29253276
04 FC:1802 900.00 DA

UNITED STATES PATENT AND TRADEMARK OFFICE

UNITED STATES DEPARTMENT OF COMMERCE
United States Patent and Trademark Office
Address: COMMISSIONER FOR PATENTS
P.O. Box 1450
Alexandria, Virginia 22313-1450
www.uspto.gov

APPL NO.	FILING OR 371 (c) DATE	ART UNIT	FIL FEE REC'D	ATTY.DOCKET NO	DRAWINGS	TOT CLMS	IND CLMS
29/253,299	02/03/2006	2913	495	15053.0031US01	2	1	1

CONFIRMATION NO. 6690

23552
MERCHANT & GOULD PC
P.O. BOX 2903
MINNEAPOLIS, MN 55402-0903

UPDATED FILING RECEIPT

OC000000018710003

Date Mailed: 05/08/2006

Receipt is acknowledged of this regular Patent Application. It will be considered in its order and you will be notified as to the results of the examination. Be sure to provide the U.S. APPLICATION NUMBER, FILING DATE, NAME OF APPLICANT, and TITLE OF INVENTION when inquiring about this application. Fees transmitted by check or draft are subject to collection. Please verify the accuracy of the data presented on this receipt. **If an error is noted on this Filing Receipt, please mail to the Commissioner for Patents P.O. Box 1450 Alexandria Va 22313-1450. Please provide a copy of this Filing Receipt with the changes noted thereon. If you received a "Notice to File Missing Parts" for this application, please submit any corrections to this Filing Receipt with your reply to the Notice. When the USPTO processes the reply to the Notice, the USPTO will generate another Filing Receipt incorporating the requested corrections (if appropriate).**

Applicant(s)

Elias A. Colmenares, Caracas, VENEZUELA;

Power of Attorney: The patent practitioners associated with Customer Number **23552**.

Domestic Priority data as claimed by applicant

Foreign Applications	Acceptable Request to Retrieve Priority Application Received?
VENEZUELA 05-1579 08/04/2005	NO

If Required, Foreign Filing License Granted: 02/27/2006

The country code and number of your priority application, to be used for filing abroad under the Paris Convention, is US29/253,299

Projected Publication Date: None, application is not eligible for pre-grant publication

Non-Publication Request: No

Early Publication Request: No

**** SMALL ENTITY ****

Title

Furniture semi-circular tray

Preliminary Class

D06

PROTECTING YOUR INVENTION OUTSIDE THE UNITED STATES

Since the rights granted by a U.S. patent extend only throughout the territory of the United States and have no effect in a foreign country, an inventor who wishes patent protection in another country must apply for a patent in a specific country or in regional patent offices. Applicants may wish to consider the filing of an international application under the Patent Cooperation Treaty (PCT). An international (PCT) application generally has the same effect as a regular national patent application in each PCT-member country. The PCT process **simplifies** the filing of patent applications on the same invention in member countries, but **does not result** in a grant of "an international patent" and does not eliminate the need of applicants to file additional documents and fees in countries where patent protection is desired.

Almost every country has its own patent law, and a person desiring a patent in a particular country must make an application for patent in that country in accordance with its particular laws. Since the laws of many countries differ in various respects from the patent law of the United States, applicants are advised to seek guidance from specific foreign countries to ensure that patent rights are not lost prematurely.

Applicants also are advised that in the case of inventions made in the United States, the Director of the USPTO must issue a license before applicants can apply for a patent in a foreign country. The filing of a U.S. patent application serves as a request for a foreign filing license. The application's filing receipt contains further information and guidance as to the status of applicant's license for foreign filing.

Applicants may wish to consult the USPTO booklet, "General Information Concerning Patents" (specifically, the section entitled "Treaties and Foreign Patents") for more information on timeframes and deadlines for filing foreign patent applications. The guide is available either by contacting the USPTO Contact Center at 800-786-9199, or it can be viewed on the USPTO website at http://www.uspto.gov/web/offices/pac/doc/general/index.html.

For information on preventing theft of your intellectual property (patents, trademarks and copyrights), you may wish to consult the U.S. Government website, http://www.stopfakes.gov. Part of a Department of Commerce initiative, this website includes self-help "toolkits" giving innovators guidance on how to protect intellectual property in specific countries such as China, Korea and Mexico. For questions regarding patent enforcement issues, applicants may call the U.S. Government hotline at 1-866-999-HALT (1-866-999-4158).

LICENSE FOR FOREIGN FILING UNDER
Title 35, United States Code, Section 184
Title 37, Code of Federal Regulations, 5.11 & 5.15

GRANTED

The applicant has been granted a license under 35 U.S.C. 184, if the phrase "IF REQUIRED, FOREIGN FILING LICENSE GRANTED" followed by a date appears on this form. Such licenses are issued in all applications where the conditions for issuance of a license have been met, regardless of whether or not a license may be required as set forth in 37 CFR 5.15. The scope and limitations of this license are set forth in 37 CFR 5.15(a) unless an earlier license has been issued under 37 CFR 5.15(b). The license is subject to revocation upon written notification. The date indicated is the effective date of the license, unless an earlier license of similar scope has been granted under 37 CFR 5.13 or 5.14.

This license is to be retained by the licensee and may be used at any time on or after the effective date thereof

unless it is revoked. This license is automatically transferred to any related applications(s) filed under 37 CFR 1.53(d). This license is not retroactive.

The grant of a license does not in any way lessen the responsibility of a licensee for the security of the subject matter as imposed by any Government contract or the provisions of existing laws relating to espionage and the national security or the export of technical data. Licensees should apprise themselves of current regulations especially with respect to certain countries, of other agencies, particularly the Office of Defense Trade Controls, Department of State (with respect to Arms, Munitions and Implements of War (22 CFR 121-128)); the Bureau of Industry and Security, Department of Commerce (15 CFR parts 730-774); the Office of Foreign Assets Control, Department of Treasury (31 CFR Parts 500+) and the Department of Energy.

NOT GRANTED

No license under 35 U.S.C. 184 has been granted at this time, if the phrase "IF REQUIRED, FOREIGN FILING LICENSE GRANTED" DOES NOT appear on this form. Applicant may still petition for a license under 37 CFR 5.12, if a license is desired before the expiration of 6 months from the filing date of the application. If 6 months has lapsed from the filing date of this application and the licensee has not received any indication of a secrecy order under 35 U.S.C. 181, the licensee may foreign file the application pursuant to 37 CFR 5.15(b).

UNITED STATES PATENT AND TRADEMARK OFFICE

Commissioner for Patents
United States Patent and Trademark Office
P.O. Box 1450
Alexandria, VA 22313-1450
www.uspto.gov

Lawrence J. Shurupoff, Esquire
Sunbeam Products, Inc.
2381 Executive Center Drive
Boca Raton FL 33431

COPY MAILED

AUG 06 2007

OFFICE OF PETITIONS

In re Application of	:	
Burton, et al.	:	
Application No. 29/253,302	:	ON PETITION
Filed: February 3, 2006	:	
Attorney Docket No. SUNOST-2-4926	:	
For: COOKING GRILL		

This is a decision on the petition under 37 CFR 1.137(b), filed July 9, 2007, to revive the above-identified application.

The petition is **dismissed**.

Any request for reconsideration of this decision must be submitted within TWO (2) MONTHS from the mail date of this decision. Extensions of time under 37 CFR 1.136(a) are permitted. The reconsideration request should include a cover letter entitled "Renewed Petition under 37 CFR 1.137(b)." Petitioner is advised that this is not a final agency decision.

This application became abandoned for failure to timely reply to the Notice of Allowance and Fee(s) Due and Notice of Allowability, both mailed December 13, 2006, which set a three month period for reply. This application became abandoned on March 14, 2007. A Notice of Abandonment was mailed on April 12, 2007.

A grantable petition pursuant to 37 CFR 1.137(b) must be accompanied by:

(1) the required reply, unless previously filed. In a nonprovisional application abandoned for failure to prosecute, the required reply may be met by the filing of a continuing application. In an application or patent, abandoned or lapsed for failure to pay the issue fee or any portion thereof, the required reply must be the payment of the issue fee or any outstanding balance thereof;

(2) the petition fee as set forth in 37 CFR 1.17(m);

(3) a statement that the **entire** delay in filing the required reply from the due date for the reply until the filing of a grantable petition pursuant to 37 CFR 1.137(b) was unintentional. The Director may require additional information where there is a question whether the delay was unintentional; and

(4) any terminal disclaimer (and fee set forth in 37 CFR 1.20(d)) required pursuant to 37 CFR 1.137(d).

The instant petition does not satisfy requirement (4) above.

37 CFR 1.137(d) requires that a petition under 37 CFR 1.137(b) be accompanied by a terminal disclaimer and fee regardless of the period of abandonment in a design application. This application is a design application. Thus, petitioners are required to submit a terminal disclaimer.

Further correspondence with respect to this matter should be addressed as follows:

By mail: Mail Stop PETITION
Commissioner for Patents
Post Office Box 1450
Alexandria, VA 22313-1450

By hand: U.S. Patent and Trademark Office
Customer Service Window, Mail Stop Petition
Randolph Building
401 Dulany Street
Alexandria, VA 22314

By FAX: (571) 273-8300 - ATTN: Office of Petitions

Telephone inquiries concerning this decision should be directed to the undersigned at (571) 272-3230.

Shirene Willis Brantley
Senior Petitions Attorney
Office of Petitions

UNITED STATES PATENT AND TRADEMARK OFFICE

Commissioner for Patents
United States Patent and Trademark Office
P.O. Box 1450
Alexandria, VA 22313-1450
www.uspto.gov

Lawrence J. Shurupoff, Esquire
Sunbeam Products, Inc.
2381 Executive Center Drive
Boca Raton FL 33431

COPY MAILED

JAN 1 5 2008

OFFICE OF PETITIONS

In re Application of	:	
Burton, et al.	:	
Application No. 29/253,302	:	ON PETITION
Filed: February 3, 2006	:	
Attorney Docket No. SUNOST-2-4926	:	
For: COOKING GRILL		

This is a decision on the reconsideration petition under 37 CFR 1.137(b), filed August 28, 2007, to revive the above-identified application.

The petition is **GRANTED**.

This application became abandoned for failure to timely reply to the Notice of Allowance and Fee(s) Due and Notice of Allowability, both mailed December 13, 2006, which set a three month period for reply. This application became abandoned on March 14, 2007. A Notice of Abandonment was mailed on April 12, 2007.

The petition satisfies the requirements of 37 CFR 1.137(b) in that petitioners have supplied (1) the reply in the form of a corrected drawings and the issue fee of $800.00, (2) the petition fee of $1,5000.00; (3) a proper statement of unintentional delay, and (4) a terminal disclaimer accompanied by the required $130.00 fee.

This application is being referred to Publishing Division for processing into a patent.

Telephone inquiries concerning this decision should be directed to the undersigned at (571) 272-3230.

Shirene Willis Brantley

Shirene Willis Brantley
Senior Petitions Attorney
Office of Petitions

UNITED STATES PATENT AND TRADEMARK OFFICE

Commissioner for Patents
United States Patent and Trademark Office
P.O. Box 1450
Alexandria, VA 22313-1450
www.uspto.gov

Calfee Halter & Griswold, LLP
800 Superior Avenue
Suite 1400
Cleveland, OH 44114

COPY MAILED

APR 1 5 2008

OFFICE OF PETITIONS

In re Application of	:	
Trevor Jackson	:	
Application No. 29/253,312	:	DECISION ON PETITION
Filed: February 3, 2006	:	TO WITHDRAW
Attorney Docket No.	:	FROM RECORD
	:	

This is a decision on the Request to Withdraw as attorney or agent of record under 37 C.F.R. § 1.36(b), filed November 1, 2007.

The request is **NOT APPROVED** because it is moot.

A review of the file record indicates that the power of attorney to Beyer Calfee Halter & Griswold, LLP has been revoked by the applicant of the patent application on November 19, 2007. Accordingly, the request to withdraw under 37 C.F.R. § 1.36(b) is moot.

All future communications from the Office will continue to be directed to the below-listed address until otherwise notified by applicant.

Telephone inquires concerning this decision should be directed to Terri Williams at 571-272-2991.

T. Williams

Terri Williams
Petitions Examiner
Office of Petitions

cc: **Patent, Copyright & Trademark Law Group**
PO Box 506
Richfield, OH 44286

UNITED STATES PATENT AND TRADEMARK OFFICE

Commissioner for Patents
United States Patent and Trademark Office
P.O. Box 1450
Alexandria, VA 22313-1450
www.uspto.gov

CALFEE HALTER & GRISWORLD, LLP
800 SUPERIOR AVENUE, SUITE 1400
CLEVELAND, OH 44114

COPY MAILED

JUL 11 2008

In re Application of	:	
JACKSON, Trevor	:	
Application No. 29/253,314	:	DECISION ON PETITION
Filed: February 3, 2006	:	TO WITHDRAW
Attorney Docket No. **19427.4412**	:	FROM RECORD
	:	

This is a decision on the Request to Withdraw as attorney or agent of record under 37 C.F.R. § 1.36(b), filed November 2, 2007.

The request is **DISMISSED** as moot.

A review of the file record indicates that the power of attorney to **CALFEE HALTER & GRISWORLD, LLP** has been revoked by the applicant of the patent application on November 1, 2007. Accordingly, the request to withdraw under 37 C.F.R. § 1.36(b) is moot.

All future communications from the Office will continue to be directed to the below-listed address until otherwise notified by applicant.

Telephone inquires concerning this decision should be directed to the undersigned at 571-272- 7253.

Monica A. Graves
Petitions Examiner
Office of Petitions

cc: **PATENT, COPYRIGHT & TRADEMARK LAW GROUP**
4199 KINROSS LAKES PARKWAY, SUITE 275
RICHFIELD, OH 44286

UNITED STATES PATENT AND TRADEMARK OFFICE

Commissioner for Patents
United States Patent and Trademark Office
P.O. Box 1450
Alexandria, VA 22313-1450
www.uspto.gov

TROXELL LAW OFFICE PLLC
SUITE 1404
5205 LEESBURG PIKE
FALLS CHURCH VA 22041

COPY MAILED

AUG 2 2 2007

OFFICE OF PETITIONS

In re Application of	:	
Jour, David C.T.	:	
Application No. 29/253,332	:	ON PETITION
Filed: February 6, 2006	:	
Attorney Docket No. BHT-3262-24	:	

This is a decision on the petition under 37 C.F.R. § 1.137(b), filed August 8, 2007, to revive the above-identified application.

The petition is **DISMISSED**.

Any request for reconsideration must be submitted within TWO (2) MONTHS from the mail date of this decision. No further petition fee is required for the request. Extensions of time under 37 CFR 1.136(a) are permitted. The reconsideration request should include a cover letter entitled "Renewed Petition under 37 CFR 1.137(b)." This is **not** a final agency action within the meaning of 5 U.S.C. § 704.

A grantable petition under 37 CFR 1.137(b) must be accompanied by:
(1) the required reply,[1]
(2) the petition fee,
(3) a statement that the entire delay in filing the required reply from the due date for the reply until the filing of a grantable petition pursuant to 37 CFR 1.137(b) was unintentional, and
(4) a terminal disclaimer and fee if the application was filed on or before June 8, 1995 or if the application is a design application.

Where there is a question as to whether either the abandonment or the delay in filing a petition under 37 CFR 1.137 was unintentional, the Commissioner may require additional information.[2]

The instant petition lacks item (4). Since the instant application is a design application, a terminal disclaimer and fee is necessary for revival under 37 CFR 1.137(b). A blank form is enclosed for petitioner's convenience.

---

[1] In a nonprovisional application abandoned for failure to prosecute, the required reply may be met by the filing of a continuing application. In an application or patent, abandoned or lapsed for failure to pay the issue fee or any portion thereof, the required reply must be the payment of the issue fee or any outstanding balance thereof.

[2] See MPEP 711.03(c)(III)(C) and (D).

Further correspondence with respect to this matter should be addressed as follows:

By mail: Mail Stop PETITIONS
Commissioner for Patents
Post Office Box 1450
Alexandria, VA 22313-1450

By hand: Customer Window located at:

U.S. Patent and Trademark Office
Customer Service Window Randolph Building
401 Dulany Street
Alexandria, VA 22314

By fax: (571) 273-8300
ATTN: Office of Petitions

Any questions concerning this matter may be directed to the undersigned at (571) 272-3206.

Liana Walsh
Petitions Examiner
Office of Petitions

Enclosure: PTO/SB/63

PTO/SB/63 (04-07)
Approved for use through 09/30/2007. OMB 0651-0031
U.S. Patent and Trademark Office; U.S. DEPARTMENT OF COMMERCE
Under the Paperwork Reduction Act of 1995, no persons are required to a collection of information unless it displays a valid OMB control number.

TERMINAL DISCLAIMER TO ACCOMPANY PETITION

Docket Number (Optional)

In re Application of:

Name:

Application Number:

Filed:

For:

The owner*, _____ of _____ percent interest in the above-identified application hereby disclaims a terminal part of the term of any patent granted the above-identified application equivalent to: (1) if the above-identified application is a design application, the period of abandonment of the above-identified application, and (2) if the above-identified application is a utility or plant application, the lesser of: (a) the period of abandonment of the application; or (b) the period extending beyond twenty years from the date on which the above-identified application was filed in the United States or, if the application contains a specific reference to an earlier filed application(s) under 35 U.S.C. 120, 121, or 365(c), from the date on which the earliest such application was filed. This disclaimer also applies to any patent granted on a utility or plant application filed before June 8, 1995, or a design application, that contains a specific reference under 35 U.S.C. 120, 121, or 365(c) to the above-identified application. This disclaimer is binding upon the grantee, and its successors or assigns.

Check either box 1 or 2 below, if appropriate.

1. ☐ For submissions on behalf of an organization (e.g., corporation, partnership, university, government agency, etc.), the undersigned is empowered to act on behalf of the organization.

2. ☐ The undersigned is an attorney or agent of record. Registration Number_____.

Signature	Date
Typed or Printed Name	Telephone Number

☐ Terminal disclaimer fee under 37 CFR 1.20(d) included.

WARNING: Information on this form may become public. Credit card information should not be included on this form. Provide credit card information and authorization on PTO-2038.

* Statement under 37 CFR 3.73(b) is required if terminal disclaimer is signed by the assignee (owner). Form PTO/SB/96 may be used for making this certification. See MPEP § 324.

This collection of information is required by 37 CFR 1.137. The information is required to obtain or retain a benefit by the public which is to file (and by the USPTO to process) an application. Confidentiality is governed by 35 U.S.C. 122 and 37 CFR 1.11 and 1.14. This collection is estimated to take 12 minutes to complete, including gathering, preparing, and submitting the completed application form to the USPTO. Time will vary depending upon the individual case. Any comments on the amount of time you require to complete this form and/or suggestions for reducing this burden, should be sent to the Chief Information Officer, U.S. Patent and Trademark Office, U.S. Department of Commerce, P.O. Box 1450, Alexandria, VA 22313-1450. DO NOT SEND FEES OR COMPLETED FORMS TO THIS ADDRESS. SEND TO: **Commissioner for Patents, P.O. Box 1450, Alexandria, VA 22313-1450.**

If you need assistance in completing the form, call 1-800-PTO-9199 and select option 2.

Privacy Act Statement

The **Privacy Act of 1974 (P.L. 93-579)** requires that you be given certain information in connection with your submission of the attached form related to a patent application or patent. Accordingly, pursuant to the requirements of the Act, please be advised that: (1) the general authority for the collection of this information is 35 U.S.C. 2(b)(2); (2) furnishing of the information solicited is voluntary; and (3) the principal purpose for which the information is used by the U.S. Patent and Trademark Office is to process and/or examine your submission related to a patent application or patent. If you do not furnish the requested information, the U.S. Patent and Trademark Office may not be able to process and/or examine your submission, which may result in termination of proceedings or abandonment of the application or expiration of the patent.

The information provided by you in this form will be subject to the following routine uses:

1. The information on this form will be treated confidentially to the extent allowed under the Freedom of Information Act (5 U.S.C. 552) and the Privacy Act (5 U.S.C 552a). Records from this system of records may be disclosed to the Department of Justice to determine whether disclosure of these records is required by the Freedom of Information Act.
2. A record from this system of records may be disclosed, as a routine use, in the course of presenting evidence to a court, magistrate, or administrative tribunal, including disclosures to opposing counsel in the course of settlement negotiations.
3. A record in this system of records may be disclosed, as a routine use, to a Member of Congress submitting a request involving an individual, to whom the record pertains, when the individual has requested assistance from the Member with respect to the subject matter of the record.
4. A record in this system of records may be disclosed, as a routine use, to a contractor of the Agency having need for the information in order to perform a contract. Recipients of information shall be required to comply with the requirements of the Privacy Act of 1974, as amended, pursuant to 5 U.S.C. 552a(m).
5. A record related to an International Application filed under the Patent Cooperation Treaty in this system of records may be disclosed, as a routine use, to the International Bureau of the World Intellectual Property Organization, pursuant to the Patent Cooperation Treaty.
6. A record in this system of records may be disclosed, as a routine use, to another federal agency for purposes of National Security review (35 U.S.C. 181) and for review pursuant to the Atomic Energy Act (42 U.S.C. 218(c)).
7. A record from this system of records may be disclosed, as a routine use, to the Administrator, General Services, or his/her designee, during an inspection of records conducted by GSA as part of that agency's responsibility to recommend improvements in records management practices and programs, under authority of 44 U.S.C. 2904 and 2906. Such disclosure shall be made in accordance with the GSA regulations governing inspection of records for this purpose, and any other relevant (*i.e.*, GSA or Commerce) directive. Such disclosure shall not be used to make determinations about individuals.
8. A record from this system of records may be disclosed, as a routine use, to the public after either publication of the application pursuant to 35 U.S.C. 122(b) or issuance of a patent pursuant to 35 U.S.C. 151. Further, a record may be disclosed, subject to the limitations of 37 CFR 1.14, as a routine use, to the public if the record was filed in an application which became abandoned or in which the proceedings were terminated and which application is referenced by either a published application, an application open to public inspection or an issued patent.
9. A record from this system of records may be disclosed, as a routine use, to a Federal, State, or local law enforcement agency, if the USPTO becomes aware of a violation or potential violation of law or regulation.

UNITED STATES PATENT AND TRADEMARK OFFICE

Commissioner for Patents
United States Patent and Trademark Office
P.O. Box 1450
Alexandria, VA 22313-1450
www.uspto.gov

COPY MAILED

SEP 21 2007

OFFICE OF PETITIONS

TROXELL LAW OFFICE PLLC
SUITE 1404
5205 LEESBURG PIKE
FALLS CHURCH VA 22041

In re Application of	:	
Jour, David C.T.	:	
Application No. 29/253,332	:	ON PETITION
Filed: February 6, 2006	:	
Attorney Docket No. 3262-24	:	

This is a decision on the renewed petition under 37 C.F.R. § 1.137(b), filed August 27, 2007, to revive the above-identified application.

The petition is **GRANTED.**

The terminal disclaimer and fee have been received and accepted.

This matter is being referred to the Publishing Division for processing into a patent.

Telephone inquiries regarding this decision should be directed to the undersigned at (571) 272-3206.

Liana Walsh
Petitions Examiner
Office of Petitions

1802

PTO/SB/27 (05-03)
Approved for use through 04/30/2003. OMB 0651-0031
U.S. Patent and Trademark Office; U.S. DEPARTMENT OF COMMERCE
Under the Paperwork Reduction Act of 1995, no persons are required to respond to a collection of information unless it displays a valid OMB control number.

REQUEST FOR EXPEDITED EXAMINATION OF A DESIGN APPLICATION (37 CFR 1.155)

Application Number	TBD
Filing Date	Herewith
First Named Inventor	Susan Diane Cessor
Title	PORTION OF A SHOE UPPER
Atty Docket Number	015127.00679

113006 U.S. PTO
29/253339
020606

HAND DELIVER TO THE DESIGN GROUP DIRECTOR'S OFFICE
-or- ADDRESS TO:
MAIL STOP EXPEDITED DESIGN
COMMISSIONER FOR PATENTS
P.O. Box 1450
Alexandria, VA 22313-1450

02/07/2006 AKELECH1 00000084 190733 29253339
04 FC:1802 900.00 DA

This is a request for expedited examination of a design application under 37 CFR 1.155.

NOTE: If the Request made by this form accompanies original application papers, include form PTO/SB/18 "Design Patent Application Transmittal" or its equivalent.

A preexamination search was conducted. The field of search was:

D2/ 896, 902, 907, 908, 943, 944, 969, 972, 973, 974

Approved 3/7/06
Jacqueline M. Stone
Jacqueline M. Stone, Director
Technology Center 1700

Related applications: _____

If not previously filed for the above-identified application, the following items required by 37 CFR 1.155 are enclosed:

Formal drawings (see 37 CFR 1.84).

~~02/07/2006 AKELECH1 00000083 190733 29253339~~
~~04 FC:1802 900.00 DA~~

The fee set forth in 37 CFR 1.17(k).

An information disclosure statement in compliance with 37 CFR 1.98.

January 6, 2006
Date

Darrell Mottley
Signature

202-824-3000
Telephone Number

Darrell G. Mottley, Reg. No. 42,912
Typed or printed name

WARNING: Information on this form may become public. Credit card information should not be included on this form. Provide credit card information and authorization on PTO-2038.

This collection of information is required by 37 CFR 1.155. The information is required to obtain or retain a benefit by the public which is to file (and by the USPTO to process) an application. Confidentiality is governed by 35 U.S.C. 122 and 37 CFR 1.14. This collection is estimated to take 6 minutes to complete, including gathering, preparing, and submitting the completed application form to the USPTO. Time will vary depending upon the individual case. Any comments on the amount of time you require to complete this form and/or suggestions for reducing this burden, should be sent to the Chief Information Officer, U.S. Patent and Trademark Office, U.S. Department of Commerce, P.O. Box 1450, Alexandria, VA 22313-1450. DO NOT SEND FEES OR COMPLETED FORMS TO THIS ADDRESS. SEND TO: Mail Stop Expedited Design, Commissioner for Patents, P.O. Box 1450, Alexandria, VA 22313-1450.

If you need assistance in completing the form, call 1-800-PTO-9199 and select option 2.

UNITED STATES PATENT AND TRADEMARK OFFICE

Commissioner for Patents
United States Patent and Trademark Office
P.O. Box 1450
Alexandria, VA 22313-1450
www.uspto.gov

ALLEMAN HALL MCCOY RUSSELL &
TUTTLE LLP
806 SW BROADWAY
SUITE 600
PORTLAND OR 97205-3335

COPY MAILED

JUN 10 2008

OFFICE OF PETITIONS

In re Application of	:	
Artur Willibald	:	
Application No. 29/253,342	:	ON PETITION
Filed: February 3, 2006	:	
Attorney Docket No. WBA05304D	:	

This is a decision on the petition under the unintentional provisions of 37 CFR 1.137(b), filed September 19, 2007, to revive the above-identified application.

The petition is **DISMISSED**.

Any request for reconsideration of this decision must be submitted within TWO (2) MONTHS from the mail date of this decision. Extensions of time under 37 CFR 1.136(a) are permitted. The reconsideration request should include a cover letter entitled "Renewed Petition under 37 CFR 1.137(b)." This is **not** a final agency action within the meaning of 5 U.S.C. § 704.

A grantable petition under 37 CFR 1.137(b) must be accompanied by: (1) the required reply, unless previously filed; (2) the petition fee as set forth in 37 CFR 1.17(m); (3) a statement that the entire delay in filing the required reply from the due date for the reply until the filing of a grantable petition pursuant to 37 CFR 1.137(b) was unintentional; and (4) any terminal disclaimer (and fee as set forth in 37 CFR 1.20(d)) required by 37 CFR 1.137(d). Where there is a question as to whether either the abandonment or the delay in filing a petition under 37 CFR 1.137 was unintentional, the Director may require additional information. See MPEP 711.03(c)(II)(C) and (D). The instant petition lacks item(4).

A terminal disclaimer and fee is required for design applications in accordance with 37 CFR 1.137(d).

Further correspondence with respect to this matter should be addressed as follows:

By Mail: Mail Stop PETITION
Commissioner for Patents
P. O. Box 1450
Alexandria, VA 22313-1450

By hand: U. S. Patent and Trademark Office
Customer Service Window, Mail Stop Petitions
Randolph Building
401 Dulany Street
Alexandria, VA 22314

The centralized facsimile number is **(571) 273-8300.**

Telephone inquiries concerning this decision should be directed to the undersigned at (571) 272-3208.

Karen Creasy

Karen Creasy
Petitions Examiner
Office of Petitions

UNITED STATES PATENT AND TRADEMARK OFFICE

Commissioner for Patents
United States Patent and Trademark Office
P.O. Box 1450
Alexandria, VA 22313-1450
www.uspto.gov

ALLEMAN HALL MCCOY RUSSELL &
TUTTLE LLP
806 SW BROADWAY
SUITE 600
PORTLAND OR 97205-3335

COPY MAILED
JUL 03 2008
OFFICE OF PETITIONS

In re Application of	:	
Artur Willibald	:	
Application No. 29/253,342	:	DECISION GRANTING PETITION
Filed: February 3, 2006	:	UNDER 37 CFR 1.137(b)
Attorney Docket No. WBA05304D	:	

This is a decision on the renewed petition under 37 CFR 1.137(b), filed June 13, 2008, to revive the above-identified application.

The petition is **GRANTED**.

The petition satisfies the conditions for revival pursuant to the provisions of 37 CFR 1.137(b) in that (1) the reply in the form of an corrected drawings and terminal disclaimer/fee; (2) the petition fee; and (3) the required statement of unintentional delay have been received. Accordingly, the reply to the Notice of Allowance/Notice of Allowability mailed May 14, 2007, is accepted as having been unintentionally delayed.

Telephone inquiries concerning this decision should be directed to the undersigned at (571) 272-3208.

This matter is being referred to the Office of Data Management and for review of the drawings received September 19, 2007.

Karen Creasy
Petitions Examiner
Office of Petitions

UNITED STATES PATENT AND TRADEMARK OFFICE

Commissioner for Patents
United States Patent and Trademark Office
P.O. Box 1450
Alexandria, VA 22313-1450
www.uspto.gov

Phillip Elliott House
7056 Tulip Trail
Memphis TN 38133

COPY MAILED

OCT 0 2 2007

OFFICE OF PETITIONS

In re Application of :
Phillip Elliott House :
Application No. 29/253,358 : DECISION ON PETITION
Filed: February 6, 2006 :
For: MOTORIZED VEHICLE SHAPED EAR :
PLUG CONTAINER WITH A ROTATING BELT
CLIP, OR SIMILAR ARTICLE

This is a decision on the petition under 37 CFR 1.137(b), filed August 22, 2007, to revive the above-identified design application.

The petition is **GRANTED**.

This application became abandoned for failure to timely pay the issue fee on or before May 8, 2007, as required by the Notice of Allowance and Fee(s) Due mailed February 8, 2007. Accordingly, the date of abandonment of this application is February 9, 2007. A Notice of Abandonment was mailed on June 28, 2007.

The petition satisfies the requirements of 37 CFR 1.137(b) in that petitioner has supplied (1) the reply in the form of payment of the $400 issue fee, (2) the petition fee of $750, (3) a proper statement of unintentional delay, and (4) a terminal disclaimer and fee as required by 37 CFR 1.137(d). Accordingly, the reply to the Notice of February 8, 2007 is accepted as being unintentionally delayed.

The terminal disclaimer is accepted and has been made of record. Any continuing application filed from this application must contain a copy of the terminal disclaimer. The copy of the terminal disclaimer must be filed with a cover letter requesting the terminal disclaimer be recorded on the continuing application. A copy of this decision should be attached to the cover letter.

Telephone inquiries concerning this decision should be directed to the undersigned at (571) 272-3218.

This application is being referred to Publishing Division for further processing in accordance with this decision accepting the unintentionally delayed payment of the issue fee.

Frances Hicks
Petitions Examiner
Office of Petitions

UNITED STATES PATENT AND TRADEMARK OFFICE

Commissioner for Patents
United States Patent and Trademark Office
P.O. Box 1450
Alexandria, VA 22313-1450
www.uspto.gov

OSTROLENK FABER GERB & SOFFEN
1180 AVENUE OF THE AMERICAS
NEW YORK NY 10036-8403

COPY MAILED

AUG 2 8 2006

OFFICE OF PETITIONS

In re Application of	:
Fung	: DECISION GRANTING
Application No. 29/253,428	: PETITION
Filed: February 7, 2006	:
Attorney Docket No. P/1940-41	:
For: UTILITY PORTION OF CULINARY WHISK	

This is a decision on the petition filed April 11, 2006 (certificate of mailing date April 4, 2006) under 37 CFR 1.10(d), requesting that the above-identified application be accorded a filing date of February 6, 2006, rather than the presently accorded filing date of February 7, 2006.

Petitioner requests the earlier filing date on the basis that the application was deposited in Express Mail service on February 6, 2006, pursuant to the requirements of 37 CFR 1.10. The petition is accompanied by, *inter alia*, a USPS Pickup Service Statement for Express Mail, Priority Mail, or Parcel Post that lists a package associated with Express Mail label no. EV343679172US among others. The same Express Mail label number is found on the original application papers.

Paragraph (d) of 37 CFR 1.10 states that:

> Any person filing correspondence under this section that was received by the Office and delivered by the "Express Mail Post Office to Addressee" service of the USPS, who can show that the "date-in" on the "Express Mail" mailing label or other official notation entered by the USPS was incorrectly entered or omitted by the USPS, may petition the Director to accord the correspondence a filing date as of the date the correspondence is shown to have been deposited with the USPS, provided that:
>
> (1) The petition is filed promptly after the person becomes aware that the Office has accorded, or will accord, a filing date based upon an incorrect entry by the USPS;
>
> (2) The number of the "Express Mail" mailing label was placed on the paper(s) or fee(s) that constitute the correspondence prior to the original mailing by "Express Mail"; and
>
> (3) The petition includes a showing which establishes, to the satisfaction of the Director, that the requested filing date was the date the correspondence was deposited in "Express Mail Post Office to Addressee" service prior to the last scheduled pickup for

> that day. Any showing pursuant to this paragraph must be corroborated by evidence from the USPS or that came into being after deposit and within one business day of the deposit of the correspondence in the "Express Mail Post Office to Addressee" service of the USPS.

A grantable petition under 37 CFR 1.10(d) must include "a showing which establishes, to the satisfaction of the Director, that the requested filing date was the date the correspondence was deposited in "Express Mail Post Office to Addressee" service prior to the last scheduled pickup for that day." In addition, the showing "must be corroborated by evidence from the USPS or that came into being after deposit and within one business day of the deposit of the correspondence in the 'Express Mail Post Office to Addressee' service of the USPS."

Petitioner has submitted a copy of a USPS Pickup Service Statement for Express Mail, Priority Mail, or Parcel Post that lists the Express Mail label number in question. The statement cites 2/6/06 as the date of pickup and is signed by a postal employee. Therefore, the petition is accompanied by the persuasive corroborating evidence required by the rule. Accordingly, the petition is granted.

The application is being returned to the Office of Initial Patent Examination for correction of the filing date to **February 6, 2006**.

Thereafter, the application will be forwarded to Technology Center Art Unit 2913 for examination in due course.

Any inquiries related to this decision should be directed to the undersigned at (571) 272-3230.

Shirene Willis Brantley

Shirene Willis Brantley
Senior Petitions Attorney
Office of Petitions

PTO/SB/27 (09-04)
Approved for use through 07/31/2006. OMB 0651-0031
U.S. Patent and Trademark Office; U.S. DEPARTMENT OF COMMERCE
Under the Paperwork Reduction Act of 1995, no persons are required to respond to a collection of information unless it displays a valid OMB control number.

REQUEST FOR EXPEDITED EXAMINATION OF A DESIGN APPLICATION (37 CFR 1.155)

Application Number	TBD
Filing Date	02/08/2006
First Named Inventor	Jenny T. Lam et al.
Title	Icon For a Portion of a Display Screen
Atty Docket Number	013797.01675

IU3006 U.S. PTO
29/253453
020806

ADDRESS TO:
MAIL STOP EXPEDITED DESIGN
COMMISSIONER FOR PATENTS
P.O. Box 1450
Alexandria, VA 22313-1450

This is a request for expedited examination of a design application under 37 CFR 1.155.

NOTE: If the Request made by this form accompanies original application papers, include form PTO/SB/18 "Design Patent Application Transmittal" or its equivalent.

A preexamination search was conducted. The field of search was:

Class D14 (subclasses 485, 486, 487, 488, 489, 490, 491, 492, 493, 494, 495); Class D18 (subclasses 24, 25, 26, 27, 28, 29, 30, 31, 32, 33); Class D19 (subclasses 6, 7); Class D20 (subclasses 11, 18); Class D21 (subclasses 324, 325, 326, 327, 328, 329, 330, 331, 332, 333); Class 345 (subclasses 683, 902), Class 715 (subclasses 700-726, 762-867, 973-977)

Related applications: 29/228,381, filed 4/22/05 and 29/228,382, filed 4/22/05

Approved 3/7/06
Jacqueline M. Stone
Jacqueline M. Stone, Director
Technology Center 1700

If not previously filed for the above-identified application, the following items required by 37 CFR 1.155 are enclosed:
- Formal drawings (see 37 CFR 1.84).
- The fee set forth in 37 CFR 1.17(k).
- An information disclosure statement in compliance with 37 CFR 1.98.

Signature	2/8/2006 Date
John M. Fleming Typed or printed name	56,536 Registration Number, if applicable
(202) 824-3000 Telephone Number	

WARNING: Information on this form may become public. Credit card information should not be included on this form. Provide credit card information and authorization on PTO-2038.

This collection of information is required by 37 CFR 1.155. The information is required to obtain or retain a benefit by the public which is to file (and by the USPTO to process) an application. Confidentiality is governed by 35 U.S.C. 122 and 37 CFR 1.11 and 1.14. This collection is estimated to take 6 minutes to complete, including gathering, preparing, and submitting the completed application form to the USPTO. Time will vary depending upon the individual case. Any comments on the amount of time you require to complete this form and/or suggestions for reducing this burden, should be sent to the Chief Information Officer, U.S. Patent and Trademark Office, U.S. Department of Commerce, P.O. Box 1450, Alexandria, VA 22313-1450. DO NOT SEND FEES OR COMPLETED FORMS TO THIS ADDRESS. SEND TO: Mail Stop Expedited Design, Commissioner for Patents, P.O. Box 1450, Alexandria, VA 22313-1450.
If you need assistance in completing the form, call 1-800-PTO-9199 and select option 2.

02/09/2006 SSITHIB1 00000001 190733 29253453
04 FC:1802 900.00 DA

UNITED STATES PATENT AND TRADEMARK OFFICE

Commissioner for Patents
United States Patent and Trademark Office
P.O. Box 1450
Alexandria, VA 22313-1450
www.uspto.gov

COPY MAILED

AUG 0 2 2007

OFFICE OF PETITIONS

NIXON & VANDERHYE, PC
901 NORTH GLEBE ROAD, 11TH FLOOR
ARLINGTON, VA 22203

In re Application of	:	
Kenji Ohta	:	
Application No. 29/253,454	:	ON PETITION
Filed: February 8, 2006	:	
Attorney Docket No. 790-1724	:	

This is a decision on the petition filed March 26, 2007 under 37 CFR 1.137(b), to revive the above-identified application.

The petition is **GRANTED.**

The above-identified application became abandoned for failure to submit the Issue fee in a timely manner in reply to the Notice of Allowance mailed June 28, 2006, which set a statutory period for reply of three (3) months. Accordingly, the above-identified application became abandoned on September 29, 2006.

The petition satisfies the conditions for revival pursuant to the provisions of 37 CFR 1.137(b) in that (1) the reply in the form of payment of the Issue fee; (2) the petition fee; and (3) the required statement of unintentional delay have been received. Accordingly, the issue fee is accepted as having been unintentionally delayed.

Telephone inquiries concerning this decision should be directed to the undersigned at (571) 272-3210.

This matter is being referred to the Publishing Division for further processing.

Irvin Dingle
Petitions Examiner
Office of Petitions

UNITED STATES PATENT AND TRADEMARK OFFICE

Commissioner for Patents
United States Patent and Trademark Office
P.O. Box 1450
Alexandria, VA 22313-1450
www.uspto.gov

COPY MAILED

MAY 08 2007

OFFICE OF PETITIONS

WILLIAM E HEIN
PO BOX 335
LOVELAND CO 80539-0335

In re Application of :

HEIN, Paul R. :
Application No. 29/253,527 : DECISION ON PETITION
Filed: February 07, 2006 : TO WITHDRAW
Attorney Docket No. **514** : FROM RECORD

This is a decision on the Request to Withdraw as attorney or agent of record under 37 C.F.R. § 1.36(b), filed March 05, 2007.

The request is **NOT APPROVED**.

A grantable request to withdraw as attorney/agent of record must be signed by every attorney/agent seeking to withdraw or contain a clear indication that one attorney is signing on behalf of another/others. A request to withdraw will not be approved unless at least 30 (thirty) days would remain between the date of approval and the later of the expiration date of a time to file a response or the expiration date of the maximum time period which can be extended under 37 C.F.R. § 1.136(a).

The Office cannot approve the request at this time since the reasons provided do not meet any of the conditions under the mandatory or permissive categories enumerated in 37 CFR 10.40. Section 10.40 of Title 37 of the Code of Federal Regulation states, "[a] practitioner shall not withdraw from employment in a proceeding before the Office without permission from the Office[.]" More specifically, 37 CFR 10.40 states, "[i]f paragraph (b) of this section is not applicable, a practitioner may not request permission to withdraw in matter pending before the Office unless such request or such withdrawal is" for one the permissive reasons listed in 37 CFR 10.40(c). The reasons set forth in the request, applicant's new associate will render further representation of applicant, does not meet any of the conditions set forth in 37 CFR 10.40.

All future communications from the Office will continue to be directed to the above-listed address until otherwise notified by applicant.

Telephone inquiries concerning this decision should be directed to Tredelle Jackson at 571-272- 2783.

Monica A. Graves
Petitions Examiner
Office of Petitions

cc: **PAUL R. HEIN**
187-12TH STEET SE
LOVELAND, CO 80537

UNITED STATES PATENT AND TRADEMARK OFFICE

Commissioner for Patents
United States Patent and Trademark Office
P.O. Box 1450
Alexandria, VA 22313-1450
www.uspto.gov

WILLIAM E HEIN
PO BOX 335
LOVELAND CO 80539-0335

COPY MAILED

SEP 0 4 2007

OFFICE OF PETITIONS

In re Application of

HEIN, Paul R.
Application No. 29/253,528
Filed: February 07, 2006
Attorney Docket No. **515**

DECISION ON PETITION
TO WITHDRAW
FROM RECORD

This is a decision on the Request to Withdraw as attorney or agent of record under 37 C.F.R. § 1.36(b), filed March 05, 2007.

The request is **NOT APPROVED**.

A grantable request to withdraw as attorney/agent of record must be signed by every attorney/agent seeking to withdraw or contain a clear indication that one attorney is signing on behalf of another/others. A request to withdraw will not be approved unless at least 30 (thirty) days would remain between the date of approval and the later of the expiration date of a time to file a response or the expiration date of the maximum time period which can be extended under 37 C.F.R. § 1.136(a).

The Office cannot approve the request at this time since the reasons provided do not meet any of the conditions under the mandatory or permissive categories enumerated in 37 CFR 10.40. Section 10.40 of Title 37 of the Code of Federal Regulation states, "[a] practitioner shall not withdraw from employment in a proceeding before the Office without permission from the Office[.]" More specifically, 37 CFR 10.40 states, "[i]f paragraph (b) of this section is not applicable, a practitioner may not request permission to withdraw in matter pending before the Office unless such request or such withdrawal is" for one the permissive reasons listed in 37 CFR 10.40(c). The reasons set forth in the request, applicant's new associate will render further representation of applicant unreasonably difficult, does not meet any of the conditions set forth in 37 CFR 10.40.

All future communications from the Office will continue to be directed to the above-listed address until otherwise notified by applicant.

Telephone inquiries concerning this decision should be directed to Tredelle Jackson at 571-272- 2783.

Monica A. Graves
Petitions Examiner
Office of Petitions

cc: **PAUL R. HEIN**
187 12TH STREET SE
LOVELAND, CO 80537

PTO/SB/27 (09-04)
Approved for use through 07/31/2006. OMB 0651-0031
U.S. Patent and Trademark Office; U.S. DEPARTMENT OF COMMERCE
Under the Paperwork Reduction Act of 1995, no persons are required to respond to a collection of information unless it displays a valid OMB control number.

REQUEST FOR EXPEDITED EXAMINATION OF A DESIGN APPLICATION (37 CFR 1.155)

Application Number	TBD
Filing Date	02/09/2006
First Named Inventor	Adrienne E. O'Donnell et al.
Title	Icon For a Portion of a Display Screen
Atty Docket Number	013797.01802

113006 U.S. PTO
29/253556
020906

ADDRESS TO:
MAIL STOP EXPEDITED DESIGN
COMMISSIONER FOR PATENTS
P.O. Box 1450
Alexandria, VA 22313-1450

This is a request for expedited examination of a design application under 37 CFR 1.155.

NOTE: If the Request made by this form accompanies original application papers, include form PTO/SB/18 "Design Patent Application Transmittal" or its equivalent.

A preexamination search was conducted. The field of search was:

Class D14 (subclasses 485, 486, 487; 488, 489, 490, 491, 492, 493, 494, 495); Class D18 (subclasses 24, 25, 26, 27, 28, 29, 30, 31, 32, 33); Class D19 (subclasses 6, 7); Class D20 (subclasses 11, 18); Class D21 (subclasses 324, 325, 326, 327, 328, 329, 330, 331, 332, 333); Class 345 (subclasses 683, 902), Class 715 (subclasses 700-726, 762-867, 973-977)

3/7/06

Related applications: 29/228,412, filed 4/22/05

Approved
Jacqueline M. Stone
Jacqueline M. Stone, Director
Technology Center 1700

If not previously filed for the above-identified application, the following items required by 37 CFR 1.155 are enclosed:
Formal drawings (see 37 CFR 1.84).
The fee set forth in 37 CFR 1.17(k).
An information disclosure statement in compliance with 37 CFR 1.98.

J. M. F.
Signature

02/09/2006
Date

John M. Fleming
Typed or printed name

56,536
Registration Number, if applicable

(202) 824-3000
Telephone Number

WARNING: Information on this form may become public. Credit card information should not be included on this form. Provide credit card information and authorization on PTO-2038.

This collection of information is required by 37 CFR 1.155. The information is required to obtain or retain a benefit by the public which is to file (and by the USPTO to process) an application. Confidentiality is governed by 35 U.S.C. 122 and 37 CFR 1.11 and 1.14. This collection is estimated to take 6 minutes to complete, including gathering, preparing, and submitting the completed application form to the USPTO. Time will vary depending upon the individual case. Any comments on the amount of time you require to complete this form and/or suggestions for reducing this burden, should be sent to the Chief Information Officer, U.S. Patent and Trademark Office, U.S. Department of Commerce, P.O. Box 1450, Alexandria, VA 22313-1450. DO NOT SEND FEES OR COMPLETED FORMS TO THIS ADDRESS. SEND TO: Mail Stop Expedited Design, Commissioner for Patents, P.O. Box 1450, Alexandria, VA 22313-1450.
If you need assistance in completing the form, call 1-800-PTO-9199 and select option 2.

02/10/2006 EAYALEW1 00000046 190733 29253556
04 FC:1802 900.00 DA

PTO/SB/27 (09-04)
Approved for use through 07/31/2006. OMB 0651-0031
U.S. Patent and Trademark Office; U.S. DEPARTMENT OF COMMERCE
Under the Paperwork Reduction Act of 1995, no persons are required to respond to a collection of information unless it displays a valid OMB control number.

REQUEST FOR EXPEDITED EXAMINATION OF A DESIGN APPLICATION (37 CFR 1.155)

Application Number	TBD
Filing Date	02/09/2006
First Named Inventor	Adrienne E. O'Donnell et al.
Title	Icon For a Portion of a Display Screen
Atty Docket Number	013797.01707

113006 U.S. PTO
29253557
020906

ADDRESS TO:
MAIL STOP EXPEDITED DESIGN
COMMISSIONER FOR PATENTS
P.O. Box 1450
Alexandria, VA 22313-1450

Approved 3-7-06
Jacqueline M. Stone
Jacqueline M. Stone, Director
Technology Center 1700

This is a request for expedited examination of a design application under 37 CFR 1.155.

NOTE: If the Request made by this form accompanies original application papers, include form PTO/SB/18 "Design Patent Application Transmittal" or its equivalent.

A preexamination search was conducted. The field of search was:

Class D14 (subclasses 485, 486, 487, 488, 489, 490, 491, 492, 493, 494, 495); Class D18 (subclasses 24, 25, 26, 27, 28, 29, 30, 31, 32, 33); Class D19 (subclasses 6, 7); Class D20 (subclasses 11, 18); Class D21 (subclasses 324, 325, 326, 327, 328, 329, 330, 331, 332, 333); Class 345 (subclasses 683, 902), Class 715 (subclasses 700-726, 762-867, 973-977)

Related applications: 29/228,388, filed 4/22/05; 29/228,389, filed 4/22/05; and 29/228,390, filed 4/22/05

If not previously filed for the above-identified application, the following items required by 37 CFR 1.155 are enclosed:
- Formal drawings (see 37 CFR 1.84).
- The fee set forth in 37 CFR 1.17(k).
- An information disclosure statement in compliance with 37 CFR 1.98.

Signature	02/09/2006 Date
John M. Fleming Typed or printed name	56,536 Registration Number, if applicable
(202) 824-3000 Telephone Number	

WARNING: Information on this form may become public. Credit card information should not be included on this form. Provide credit card information and authorization on PTO-2038.

02/10/2006 EAYALEW1 00000045 190733 29253557
04 FC:1802 900.00 DA

This collection of information is required by 37 CFR 1.155. The information is required to obtain or retain a benefit by the public which is to file (and by the USPTO to process) an application. Confidentiality is governed by 35 U.S.C. 122 and 37 CFR 1.11 and 1.14. This collection is estimated to take 6 minutes to complete, including gathering, preparing, and submitting the completed application form to the USPTO. Time will vary depending upon the individual case. Any comments on the amount of time you require to complete this form and/or suggestions for reducing this burden, should be sent to the Chief Information Officer, U.S. Patent and Trademark Office, U.S. Department of Commerce, P.O. Box 1450, Alexandria, VA 22313-1450. DO NOT SEND FEES OR COMPLETED FORMS TO THIS ADDRESS. SEND TO: Mail Stop Expedited Design, Commissioner for Patents, P.O. Box 1450, Alexandria, VA 22313-1450.
If you need assistance in completing the form, call 1-800-PTO-9199 and select option 2.

PTO/SB/27 (09-04)
Approved for use through 07/31/2006. OMB 0651-0031
U.S. Patent and Trademark Office; U.S. DEPARTMENT OF COMMERCE
Under the Paperwork Reduction Act of 1995, no persons are required to respond to a collection of information unless it displays a valid OMB control number.

REQUEST FOR EXPEDITED EXAMINATION OF A DESIGN APPLICATION (37 CFR 1.155)

Application Number	TBD
Filing Date	02/09/2006
First Named Inventor	Greg S. Melander et al.
Title	Icon For a Portion of a Display Screen
Atty Docket Number	013797.01692

113006 U.S. PTO
29253558
020906

ADDRESS TO:
MAIL STOP EXPEDITED DESIGN
COMMISSIONER FOR PATENTS
P.O. Box 1450
Alexandria, VA 22313-1450

Approved 3-7-06
Jacqueline M. Stone
Jacqueline M. Stone, Director
~~Technology Center 1700~~

This is a request for expedited examination of a design application under 37 CFR 1.155.

NOTE: If the Request made by this form accompanies original application papers, include form PTO/SB/18 "Design Patent Application Transmittal" or its equivalent.

A preexamination search was conducted. The field of search was:

Class D14 (subclasses 485, 486, 487, 488, 489, 490, 491, 492, 493, 494, 495); Class D18 (subclasses 24, 25, 26, 27, 28, 29, 30, 31, 32, 33); Class D19 (subclasses 6, 7); Class D20 (subclasses 11, 18); Class D21 (subclasses 324, 325, 326, 327, 328, 329, 330, 331, 332, 333); Class 345 (subclasses 683, 902), Class 715 (subclasses 700-726, 762-867, 973-977)

Related applications: 29/228,412, filed 4/22/05

If not previously filed for the above-identified application, the following items required by 37 CFR 1.155 are enclosed:
- Formal drawings (see 37 CFR 1.84).
- The fee set forth in 37 CFR 1.17(k).
- An information disclosure statement in compliance with 37 CFR 1.98.

Signature	02/09/2006 Date
John M. Fleming Typed or printed name	56,536 Registration Number, if applicable
(202) 824-3000 Telephone Number	

WARNING: Information on this form may become public. Credit card information should not be included on this form. Provide credit card information and authorization on PTO-2038.

02/10/2006 EAYALEN1 00000044 90733 29253558
04 FC:1802 900.00 DA

This collection of information is required by 37 CFR 1.155. The information is required to obtain or retain a benefit by the public which is to file (and by the USPTO to process) an application. Confidentiality is governed by 35 U.S.C. 122 and 37 CFR 1.11 and 1.14. This collection is estimated to take 6 minutes to complete, including gathering, preparing, and submitting the completed application form to the USPTO. Time will vary depending upon the individual case. Any comments on the amount of time you require to complete this form and/or suggestions for reducing this burden, should be sent to the Chief Information Officer, U.S. Patent and Trademark Office, U.S. Department of Commerce, P.O. Box 1450, Alexandria, VA 22313-1450. DO NOT SEND FEES OR COMPLETED FORMS TO THIS ADDRESS. SEND TO: Mail Stop Expedited Design, Commissioner for Patents, P.O. Box 1450, Alexandria, VA 22313-1450.
If you need assistance in completing the form, call 1-800-PTO-9199 and select option 2.

PTO/SB/27 (09-04)
Approved for use through 07/31/2006. OMB 0651-0031
U.S. Patent and Trademark Office; U.S. DEPARTMENT OF COMMERCE
Under the Paperwork Reduction Act of 1995, no persons are required to respond to a collection of information unless it displays a valid OMB control number.

REQUEST FOR EXPEDITED EXAMINATION OF A DESIGN APPLICATION (37 CFR 1.155)

Application Number	TBD
Filing Date	02/09/2006
First Named Inventor	Robert Ward Massa et al.
Title	Icon For a Portion of a Display Screen
Atty Docket Number	013797.01301

11/3/06 U.S. PTO
29/253559
020906

ADDRESS TO:
MAIL STOP EXPEDITED DESIGN
COMMISSIONER FOR PATENTS
P.O. Box 1450
Alexandria, VA 22313-1450

This is a request for expedited examination of a design application under 37 CFR 1.155.

NOTE: If the Request made by this form accompanies original application papers, include form PTO/SB/18 "Design Patent Application Transmittal" or its equivalent.

A preexamination search was conducted. The field of search was:

Class D14 (subclasses 485, 486, 487, 488, 489, 490, 491, 492, 493, 494, 495); Class D18 (subclasses 24, 25, 26, 27, 28, 29, 30, 31, 32, 33); Class D19 (subclasses 6, 7); Class D20 (subclasses 11, 18); Class D21 (subclasses 324, 325, 326, 327, 328, 329, 330, 331, 332, 333); Class 345 (subclasses 683, 902), Class 715 (subclasses 700-726, 762-867, 973-977)

Approved 3/7/06
Jacqueline M. Stone
Jacqueline M. Stone, Director
Technology Center 1700

Related applications:

If not previously filed for the above-identified application, the following items required by 37 CFR 1.155 are enclosed:
- Formal drawings (see 37 CFR 1.84).
- The fee set forth in 37 CFR 1.17(k).
- An information disclosure statement in compliance with 37 CFR 1.98.

Signature	02/09/2006 Date
John M. Fleming Typed or printed name	56,536 Registration Number, if applicable
(202) 824-3000 Telephone Number	

WARNING: Information on this form may become public. Credit card information should not be included on this form. Provide credit card information and authorization on PTO-2038.

02/10/2006 EAYALEW 00000043 290733 29253559
04 FC:1802 900.00 DA

This collection of information is required by 37 CFR 1.155. The information is required to obtain or retain a benefit by the public which is to file (and by the USPTO to process) an application. Confidentiality is governed by 35 U.S.C. 122 and 37 CFR 1.11 and 1.14. This collection is estimated to take 6 minutes to complete, including gathering, preparing, and submitting the completed application form to the USPTO. Time will vary depending upon the individual case. Any comments on the amount of time you require to complete this form and/or suggestions for reducing this burden, should be sent to the Chief Information Officer, U.S. Patent and Trademark Office, U.S. Department of Commerce, P.O. Box 1450, Alexandria, VA 22313-1450. DO NOT SEND FEES OR COMPLETED FORMS TO THIS ADDRESS. SEND TO: Mail Stop Expedited Design, Commissioner for Patents, P.O. Box 1450, Alexandria, VA 22313-1450.
If you need assistance in completing the form, call 1-800-PTO-9199 and select option 2.

PTO/SB/27 (09-04)
Approved for use through 07/31/2006. OMB 0651-0031
U.S. Patent and Trademark Office; U.S DEPARTMENT OF COMMERCE
Under the Paperwork Reduction ACT of 1995, no persons are required to respond to collection of information unless it displays a valid OMB control number.

REQUEST FOR EXPEDITED EXAMINATION OF A DESIGN APPLICATION (37 CFR 1.155)

Application Number	
Filing Date	
First Named Inventor	Brandon Joshua Ezra
Title	
Atty Docket Number	

11/306 U.S. PTO
29/253659
021306

ADDRESS TO:

MAIL STOP EXPEDITED DESIGN
COMMISSIONER FOR PATENTS
P.O. Box 1450
Alexandria, VA 22313-1450

This is a request for expedited examination of a design application under 37 CFR 1.155.

NOTE: If the Request made by this form accompanies original application papers, include form PTO/SB/18 "Design Patent Application Transmittal" or its equivalent.

A preexamination search was conducted. The field of search was:

Please view the attached page called "Kart Carrier, Expedited Design Patent Application" All search fields are mentioned, thank you

Related applications: _____

If not previously filed for the above-identified application, the following items required by 37 CFR 1.155 are enclosed:

- Formal drawings (see 37 CFR 1.84).
- The fee set forth in 37 CFR 1.17(k).
- An information disclosure statement in compliance with 37 CFR 1.98.

Approved 3/7/06
Jacqueline M. Stone
Jacqueline M. Stone, Director
Technology Center 1700

Brandon Ezra... — Signature
2/07/06 — Date

Brandon Joshua Ezra — Typed or printed name
Registration Number, if applicable

574-278-7156 — Telephone Number

WARNING: Information on this form may become public. Credit card information should not be included on this form. Provide credit card information and authorization on PTO-2038.

This collection of information is required by 37 CFR 1.155. The information is required to obtain or retain a benefit by the public which is to file (and by the USPTO to process) an application. Confidentiality is governed by 35 U.S.C. 122 and 37 CFR 1.11 and 1.14. This collection is estimated to take 6 minutes to complete, including gathering, preparing, and submitting the completed application form to the USPTO. Time will vary depending upon the individual case. Any comments on the amount of time you require to complete this form and/or suggestions for reducing this burden, should be sent to the Chief Information Officer, U.S. Patent and Trademark Office, U.S. Department of Commerce, P.O. Box 1450, Alexandria, VA 22313-1450. DO NOT SEND FEES OR COMPLETED FORMS TO THIS ADDRESS. SEND TO: Commissioner for Patents, P.O. Box 1450, Alexandria, VA 22313-1450.

If you need assistance in completing the form, call 1-800-PTO-9199 and select option 2.

02/14/2006 LWONDIM1 00000105 29253659
04 FC:1802 900.00 OP

113006 U.S. PTO
29/253659
021306

Kart Carrier

Expedited Design Patent Application

I would please like to request that this design patent application be expedited.

I have performed a preexamination search and included the fields of search and information disclosed on form SB08: Information Disclosure Statement by Applicant

The fields in which a search has been performed are as follows:

D12/408; D12/154; D34/28, 32, 35 414/537,228 254/88 D12/154;
14/69.5, 71.1, 228 254/88
224/402; 224/495, 224/497; 500-0511; 224/515; 224/500,510,924,521,523,
524,525,526,527,528,529,530,534;224/924;
410/3,11, 462, 463, 464, 468,470, 466, 469, 474-485,491, 494,
521, 524, 525, 526,527, 528, 529, 530, 531,534, 536, 537,
214/1 SW,450,451,452,453,454,505 224/29 R,29 L,42.03 A,42.03 R,42.03B,
42.44, 273, 282, 42.08 211/22; 224/42.03 R, 42.03 A, 273, 42.07, 42.43, 42.44
280/769,763.1, 477, 43.1, 43, 62, 64, 511;

A check for the expedited examination fee of $900 has been included.

Thank you

Sincerely,

Brandon Ezra

UNITED STATES PATENT AND TRADEMARK OFFICE

Commissioner for Patents
United States Patent and Trademark Office
P.O. Box 1450
Alexandria, VA 22313-1450
www.uspto.gov

CR MILES, P.C.
1 OLD TOWN SQUARE, SUITE 200 B
FORT COLLINS, CO 80524

COPY MAILED

APR 18 2006

OFFICE OF PETITIONS

ON PETITION

In re Application of :
Bill D. Anderson :
Application No. 29/253,674 :
Filed: February 9, 2006 :
Attorney Docket No. AMUSDes2 :

This is a decision on papers styled, "Petition," filed March 21, 2006, which is being treated as a petition under 37 CFR 1.53, requesting that the above-identified application be accorded a filing date of February 9, 2006, including Figure 7 described in the specification.

The application was submitted on February 9, 2006. However, on March 3, 2006, the Office of Initial Patent Examination (OIPE) mailed a "Notice of Omitted Items in a Nonprovisional Application" (Notice) that stated the application had been accorded a filing date, and that Figure 7 described in the specification appears to have been omitted.

In response, on March 21, 2006, the instant petition and four (4) sheets of drawings were submitted. Petitioner argues that Figure 7 described in the specification was filed on February 9, 2006.

In support, petitioner has submitted a stamped postcard receipt that indicates the receipt in the USPTO of "Formal drawings (4 sheet(s))," on February 9, 2006. Petitioner's argument has been considered, but is not persuasive. A review of the application file indicates four (4) sheets of drawings, that include Figure nos. 1, 2, 3, 4, 5 and 6, were submitted on February 9, 2006. Sheet "1/4" contains Figures 1 and 2, sheet "2/4" contains Figures 3 and 4, sheet "3/4" contains Figure 5 and sheet "4/4" contains Figure 6. As such, the review of the actual four sheets of drawings submitted on February 6, 2006, reveals that Figure 7 was, in fact, omitted.

The Patent and Trademark Office (Office) file is the official record of the papers originally filed in this application. A review of the official file reveals Figure 7 was omitted. Figure 7 was not filed on February 6, 2006, since no such Figure is present in the file. An applicant alleging that a paper was filed in the Office and later misplaced has the burden of proving the allegation by a preponderance of the evidence.

Petitioner has submitted, with the instant petition, four (4) sheets of drawings, which are supposedly copies of the formal drawings filed on February 6, 2006. It must be noted that the Figures found on the replacement drawings appear different from those found on the February 6, 2006 submission. The Figures found in the February 9, 2006 formal drawings appear to be a 10-fingered hand, while the copies submitted on March 21, 2006 do not. Furthermore, while applicant asserts both Figures 6 and 7 are to be found on drawing sheet number four, drawing sheet number 4, submitted on February 9, 2006, contains only Figure 6, centered on the page.

Accordingly, the petition is dismissed.

Please note, the petition fee will not be refunded, since the petition was not necessitated by any error on the part of the USPTO.

The application will be forwarded the Office of Initial Patent Examination for further processing with a filing date of February 9, 2006, using only the application papers filed on that date.

Telephone inquiries concerning this matter may be directed to the undersigned at (571) 272-3228.

Edward J. Tannouse
Petitions Attorney
Office of Petitions
Office of the Deputy Commissioner
for Patent Examination Policy

UNITED STATES PATENT AND TRADEMARK OFFICE

Commissioner for Patents
United States Patent and Trademark Office
P.O. Box 1450
Alexandria, VA 22313-1450
www.uspto.gov

CR MILES, P.C.
1 OLD TOWN SQUARE, SUITE 200 B
FORT COLLINS CO 80524

COPY MAILED
NOV 24 2006
OFFICE OF PETITIONS

In re Application of
BILL D. ANDERSON
Application No. 29/253,674
Filed: February 9, 2006
Attorney Docket No. AMUSDes2

ON PETITION

This is a decision on the **renewed** petition filed May 12, 2006, requesting that the above-identified application be accorded a filing date of February 9, 2006, with Figure 7 as part of the original disclosure. The petition is being treated under 37 CFR 1.53(e)(2).

On February 9, 2006, the application was filed. However, on March 3, 2006, the Office of Initial Patent Examination (OIPE) mailed a Notice of Omitted Item(s) in A Nonprovisional Application (Notice), stating that the application had been accorded a filing date of February 9, 2006, and advising applicants that Figure 7 appeared to have been omitted.

In response, on March 21, 2006, applicants filed, inter alia, the original petition, a petition fee, and four (4) sheets of completely different formal drawings containing figures 1-7. The petition filed on March 21, 2006 was dismissed on April 18, 2006.

On May 12, 2006, Petitioner filed a request for reconsideration of the dismissal stating that during a telephone interview with Mr. Edward Tannouse, the deciding official of the dismissal decision, it was discovered by the applicant and Mr. Tannouse that the drawing sheets originally filed with the application were inadvertently substituted at the office by one or more figures from the Information Disclosure Statement. Petitioner explains that the drawing sheets 1-4 containing figures 1-6 shown in the file as being filed on February 9, 2006 were from the design application 29/233,706 which was listed as a part of the Information Disclosure Statement accompanying the original application submission. Petitioner asserts that the sheets of drawings from the original specification and the sheets of drawings from the design application 29/233,706 were commingled.

Accordingly, the petition is **DISMISSED**.

There is no evidence to support petitioner's assertion that the drawings filed with the original specification were substituted by the drawings from application 29/233,706 filed with the IDS as a result of USPTO error.

For the drawings to be commingled, there should be evidence in the file record of a copy of the entire design application 29/233,706 including its corresponding specification, claims, transmittal pages, etc., not just four sheets of drawings. There should also be some remnants of the missing original drawings. Absent such evidence on the record, there is no showing of any USPTO error. An applicant alleging that a paper was filed in the Office and later misplaced has the burden of proving the allegation by a preponderance of the evidence.

Furthermore, there is no clear evidence on record that a copy of the design application 29/233,706 was filed with the USPTO on February 9, 2006. While the postcard receipt indicates an "Information Disclosure Statement (1 page(s)) along with copies of each cited reference" was filed on February 9, 2006, the application transmittal form "Design Patent Application Transmittal" PTO/SB/18 indicates contradictory information. Under the "Accompanying Application Parts" heading, the item 10 box for Information Disclosure Statement (IDS) is clearly marked, while the box for "Copies of foreign patent documents, publications, & other information" has not been marked. This would indicate that copies of the references on the IDS were not submitted with the application.

The postcard receipt for this application did not separately list the number of figures of the drawings or itemize the references listed on the IDS that were being submitted. As set forth in MPEP 503, a postcard receipt will not serve as prima facie evidence of receipt of any item that is not adequately itemized on the postcard, and specifically sets forth that a receipt bearing a general indication of the filing of an application will not, as here, serve as evidence of receipt of any missing pages. Thus, since the receipt in question did not separately list the exact number of figures in the drawings being filed or the number and pages of the references submitted from the IDS, the instant postcard receipt cannot be relied upon as evidence that the missing figure 7 in question was received at the USPTO on February 9, 2006 or that complete copies of the references were concurrently filed. The postcard receipt indicates that 4 sheets of drawings were filed on February 9, 2006 and 4 sheets of drawings are of record in this application. Albeit figure 7 is missing, the file record is commensurate with the postcard receipt.

The petition fee will not be refunded because the present petition was not necessitated by any error on the part of the United States Patent and Trademark Office.

This matter is being forward to OIPE for further processing with a filing date of March 21, 2006, using the drawings filed on that date.

Any inquiries related to this decision should be directed to Amelia Au at (571) 272-7414.

Brian Hearn
Petitions Examiner
Office of Petitions

UNITED STATES PATENT AND TRADEMARK OFFICE

Commissioner for Patents
United States Patent and Trademark Office
P.O. Box 1450
Alexandria, VA 22313-1450
www.uspto.gov

SCHNADER HARRISON SEGAL & LEWIS, LLP
1600 MARKET STREET
SUITE 3600
PHILADELPHIA PA 19103

COPY MAILED

SEP 15 2008

In re Application of	:	
BOLER, Lewyn B. Jr.	:	
Application No. 29/253,693	:	DECISION ON PETITION
Filed: February 11, 2006	:	TO WITHDRAW
Attorney Docket No. **3008835-0006**	:	FROM RECORD

This is a decision on the Request to Withdraw as attorney or agent of record under 37 C.F.R. § 1.36(b), filed September 05, 2008.

The request is **APPROVED**.

A grantable request to withdraw as attorney/agent of record must be signed by every attorney/agent seeking to withdraw or contain a clear indication that one attorney is signing on behalf of another/others. The Office requires the practitioner(s) requesting withdrawal to certify that he, she, or they have: (1) given reasonable notice to the client, prior to the expiration of the response period, that the practitioner(s) intends to withdraw from employment; (2) delivered to the client or a duly authorized representative of the client all papers and property (including funds) to which the client is entitled; and (3) notified the client of any responses that may be due and the time frame within which the client must respond, pursuant 37 CFR 10.40(c).

The request was signed by Ronald Ventola, II on behalf of all attorneys of record who are associated with customer No. 22469. All attorneys/agents associated with the Customer Number 22469 have been withdrawn. Applicant is reminded that there is no attorney of record at this time.

All future correspondence will be directed to the inventor Lewyn Boler, Jr. at the address indicated below.

Telephone inquiries concerning this decision should be directed to Tredelle Jackson at 571-272-2783.

Tredelle D. Jackson
Paralegal Specialist
Office of Petitions

cc: **LEWYN BOLER, JR.**
1000 EAST CHANNEL STREET
STOCKTON CA 95205

UNITED STATES PATENT AND TRADEMARK OFFICE

Commissioner for Patents
United States Patent and Trademark Office
P.O. Box 1450
Alexandria, VA 22313-1450
www.uspto.gov

ABELMAN, FRAYNE & SCHWAB
666 THIRD AVENUE, 10TH FLOOR
NEW YORK NY 10017

COPY MAILED

MAR 15 2007

OFFICE OF PETITIONS

In re Application of :
Van Slooten, et al. :
Application No. 29/253,702 : ON PETITION
Filed: February 9, 2006 :
Attorney Docket No. 207,355 :
For: FURNITURE ASSEMBLY

This is a decision on the petition captioned under 37 CFR 1.10(c), filed February 16, 2007, requesting that the Office correct the mailing date of the issue fee payment to January 3, 2007, rather than January 4, 2007, which is the date it was received in the Office. The petition will be treated under 37 CFR 1.181.

The petition under 37 CFR 1.181 is **dismissed**.

A Notice of Allowance and Fee(s) Due and a Notice of Allowability were mailed on October 3, 2006. Applicants were given a non-extendable three month period from the mail date of the Notices to reply. The Office received a PTOL-85B, authorization to charge the issue fee to petitioners' deposit account, and replacement drawings on January 4, 2007. Therefore, the Office considers the application abandoned, because the due date for the aforementioned items was January 3, 2007.

Petitioners contend that the PTOL-85B, authorization to charge the issue fee to petitioners' deposit account, and replacement drawings were deposited in the United States Postal Service (USPS) Express Mail service on January 3, 2007, and accordingly request a January 3, 2007 mailing date for the items in Office records.

Unfortunately, the postal stamp on the copy of Express Mail Receipt no. ER059677689US is illegible. The petition cannot be properly evaluated without a legible copy of Express Mail Receipt no. ER05977689US.

Please submit another copy of Express Mail Receipt no. ER059677689US and a reconsideration petition within two months of the mail date of this decision. No petition fee has been or will be charged in connection with this petition.

Further correspondence with respect to this matter should be addressed as follows:

By mail: Mail Stop PETITION
Commissioner for Patents
Post Office Box 1450
Alexandria, VA 22313-1450

By hand: U.S. Patent and Trademark Office
Customer Service Window, Mail Stop Petition
Randolph Building
401 Dulany Street
Alexandria, VA 22314

By FAX: (571) 273-8300 - ATTN: Office of Petitions

Telephone inquiries concerning this matter should be directed to the undersigned at (571) 272-3230.

Shirene Willis Brantley
Senior Petitions Attorney
Office of Petitions

UNITED STATES PATENT AND TRADEMARK OFFICE

COMMISSIONER FOR PATENTS
UNITED STATES PATENT AND TRADEMARK OFFICE
P.O. BOX 1450
ALEXANDRIA, VA 22313-1450
www.uspto.gov

ABELMAN, FRAYNE & SCHWAB
666 THIRD AVENUE, 10TH FLOOR
NEW YORK NY 10017

COPY MAILED

APR 26 2007

OFFICE OF PETITIONS

In re Application of :
Van Slooten, et al. :
Application No. 29/253,702 :
Filed: February 9, 2006 :
Attorney Docket No. 207,355 :
For: FURNITURE ASSEMBLY

ON PETITION

This is a decision on the reconsideration petition captioned under 37 CFR 1.10(c), filed March 23, 2007, requesting that the Office correct the mailing date of the issue fee payment to January 3, 2007, rather than January 4, 2007, which is the date it was received in the Office. The petition will be treated under 37 CFR 1.181, as a petition to withdraw the holding of abandonment in the above-identified application.

The petition under 37 CFR 1.181 is **granted**.

A Notice of Allowance and Fee(s) Due and a Notice of Allowability were mailed on October 3, 2006. Applicants were given a non-extendable three month period from the mail date of the Notices to reply. The Office considered a PTOL-85B, the $400.00 issue fee, and replacement drawings as filed in the Office on January 4, 2007. Therefore, the Office considered the application abandoned, because the due date for the aforementioned items was January 3, 2007.

Petitioners contend that the PTOL-85B, authorization to charge the issue fee to petitioners' deposit account, and replacement drawings were deposited in the United States Postal Service (USPS) Express Mail service on January 3, 2007, and accordingly request a January 3, 2007 mailing date for the items in Office records.

The petition is accompanied by a copy of Express Mail label receipt no. ER059677689US that contains a postal stamp that shows the package was accepted by the USPS on JAN 3 2007. The same Express Mail label number is found on the correspondence received in the Office on January 4, 2007. It is noted the "date-in" field on the Express Mail label in question is blank.

Paragraph (d) of 37 CFR 1.10 states that:

> Any person filing correspondence under this section that was received by the Office and delivered by the "Express Mail Post Office to Addressee" service of the USPS, who can show that the "date-in" on the "Express Mail" mailing label or other official notation entered by the USPS was incorrectly entered or omitted by the USPS, may petition the Director to accord the correspondence a filing date as of the date the correspondence is shown to have been deposited with the USPS, provided that:
>
> (1) The petition is filed promptly after the person becomes aware that the Office has accorded, or will accord, a filing date based upon an incorrect entry by the USPS;
>
> (2) The number of the "Express Mail" mailing label was placed on the paper(s) or fee(s) that constitute the correspondence prior to the original mailing by "Express Mail"; and
>
> (3) The petition includes a showing, which establishes to the satisfaction of the Director, that the requested filing date was the date the correspondence was deposited in "Express Mail Post Office to Addressee" service prior to the last scheduled pickup for that day. Any showing pursuant to this paragraph must be corroborated by evidence from the USPS or that came into being after deposit and within one business day of the deposit of the correspondence in the "Express Mail Post Office to Addressee" service of the USPS.

A grantable petition under 37 CFR 1.10(d) must include "a showing, which establishes to the satisfaction of the Director, that the requested filing date was the date the correspondence was deposited in "Express Mail Post Office to Addressee" service prior to the last scheduled pick-up for that day." In addition, the showing "must be corroborated by evidence from the USPS or that came into being after deposit and within one business day of the deposit of the correspondence in the 'Express Mail Post Office to Addressee' service of the USPS."

The petition is accompanied by the corroborating evidence required by the rule. Accordingly, the petition is granted and the holding of abandonment is withdrawn. **The PTOL-85B, the $400.00 issue fee, and replacement drawings were deposited in the United States Postal Service (USPS) Express Mail service on January 3, 2007 and will be considered as filed in the Office on that date.**

The application is being returned to Publications Division for processing into a patent.

Telephone inquiries concerning this matter should be directed to the undersigned at (571) 272-3230.

Shirene Willis Brantley

Shirene Willis Brantley
Senior Petitions Attorney
Office of Petitions

UNITED STATES PATENT AND TRADEMARK OFFICE

Commissioner for Patents
United States Patent and Trademark Office
P.O. Box 1450
Alexandria, VA 22313-1450
www.uspto.gov

BROWDY AND NEIMARK, P.L.L.C.
624 NINTH STREET, NW
SUITE 300
WASHINGTON DC 20001-5303

COPY MAILED
OCT 22 2008

In re Application of	:	
Althoff et al.	:	
Application No. 29/253,734	:	DECISION ON PETITION
Filed: February 13, 2006	:	
Attorney Docket No: ALTHOFF 2	:	

This is a decision on the petition under the unintentional provisions of 37 CFR 1.137(b), filed August 22, 2008, to revive the above-identified application.

The petition is **DISMISSED**.

Any request for reconsideration of this decision must be submitted within TWO (2) MONTHS from the mail date of this decision. Extensions of time under 37 CFR 1.136(a) are permitted. The reconsideration request should include a cover letter entitled "Renewed Petition under 37 CFR 1.137(b)." This is **not** a final agency action within the meaning of 5 U.S.C.§ 704.

A grantable petition under 37 CFR 1.137(b) must be accompanied by: (1) the required reply, unless previously filed; (2) the petition fee as set forth in 37 CFR 1.17(m); (3) a statement that the entire delay in filing the required reply from the due date for the reply until the filing of a grantable petition pursuant to 37 CFR 1.137(b) was unintentional; and (4) any terminal disclaimer (and fee as set forth in 37 CFR 1.20(d)) required by 37 CFR 1.137(d). Where there is a question as to whether either the abandonment or the delay in filing a petition under 37 CFR 1.137 was unintentional, the Director may require additional information. See MPEP 711.03(c)(II)(C) and (D). The instant petition lacks item (4).

With respect to item (4), since the instant application is a design application, a terminal disclaimer and fee are required by 37 CFR 1.137(b) for revival. A terminal disclaimer form is enclosed.

Further correspondence with respect to this matter should be addressed as follows:

By Mail: Mail Stop PETITION
Commissioner for Patents
P. O. Box 1450
Alexandria, VA 22313-1450

By hand: U. S. Patent and Trademark Office
Customer Service Window, Mail Stop Petitions
Randolph Building
401 Dulany Street
Alexandria, VA 22314

By facsimile: (571) 273-8300
Attn: Office of Petitions

Telephone inquiries concerning this decision should be directed to Joan Olszewski at (571) 272-7751.

/Liana Walsh/
Liana Walsh
Petitions Examiner
Office of Petitions

Enclosure: PTO/SB/63 Terminal Disclaimer form

PTO/SB/63 (08-08)
Approved for use through 08/31/2008. OMB 0651-0031
U.S. Patent and Trademark Office; U.S. DEPARTMENT OF COMMERCE
Under the Paperwork Reduction Act of 1995, no persons are required to a collection of information unless it displays a valid OMB control number.

TERMINAL DISCLAIMER TO ACCOMPANY PETITION

Docket Number (Optional)

In re Application of:

Name:

Application Number:

Filed:

For:

The owner*, _____ of _____ percent interest in the above-identified application hereby disclaims a terminal part of the term of any patent granted the above-identified application equivalent to: (1) if the above-identified application is a design application, the period of abandonment of the above-identified application, and (2) if the above-identified application is a utility or plant application, the lesser of: (a) the period of abandonment of the application; or (b) the period extending beyond twenty years from the date on which the above-identified application was filed in the United States or, if the application contains a specific reference to an earlier filed application(s) under 35 U.S.C. 120, 121, or 365(c), from the date on which the earliest such application was filed. This disclaimer also applies to any patent granted on a utility or plant application filed before June 8, 1995, or a design application, that contains a specific reference under 35 U.S.C. 120, 121, or 365(c) to the above-identified application. This disclaimer is binding upon the grantee, and its successors or assigns.

Check either box 1 or 2 below, if appropriate.

1. ☐ For submissions on behalf of an organization (e.g., corporation, partnership, university, government agency, etc.), the undersigned is empowered to act on behalf of the organization.
2. ☐ The undersigned is an attorney or agent of record. Registration Number_____.

Signature	Date
Typed or Printed Name	Telephone Number

☐ Terminal disclaimer fee under 37 CFR 1.20(d) included.

WARNING: Information on this form may become public. Credit card information should not be included on this form. Provide credit card information and authorization on PTO-2038.

* Statement under 37 CFR 3.73(b) is required if terminal disclaimer is signed by the assignee (owner). Form PTO/SB/96 may be used for making this certification. See MPEP § 324.

This collection of information is required by 37 CFR 1.137. The information is required to obtain or retain a benefit by the public which is to file (and by the USPTO to process) an application. Confidentiality is governed by 35 U.S.C. 122 and 37 CFR 1.11 and 1.14. This collection is estimated to take 12 minutes to complete, including gathering, preparing, and submitting the completed application form to the USPTO. Time will vary depending upon the individual case. Any comments on the amount of time you require to complete this form and/or suggestions for reducing this burden, should be sent to the Chief Information Officer, U.S. Patent and Trademark Office, U.S. Department of Commerce, P.O. Box 1450, Alexandria, VA 22313-1450. DO NOT SEND FEES OR COMPLETED FORMS TO THIS ADDRESS. SEND TO: **Commissioner for Patents, P.O. Box 1450, Alexandria, VA 22313-1450.**

If you need assistance in completing the form, call 1-800-PTO-9199 and select option 2.

Privacy Act Statement

The **Privacy Act of 1974 (P.L. 93-579)** requires that you be given certain information in connection with your submission of the attached form related to a patent application or patent. Accordingly, pursuant to the requirements of the Act, please be advised that: (1) the general authority for the collection of this information is 35 U.S.C. 2(b)(2); (2) furnishing of the information solicited is voluntary; and (3) the principal purpose for which the information is used by the U.S. Patent and Trademark Office is to process and/or examine your submission related to a patent application or patent. If you do not furnish the requested information, the U.S. Patent and Trademark Office may not be able to process and/or examine your submission, which may result in termination of proceedings or abandonment of the application or expiration of the patent.

The information provided by you in this form will be subject to the following routine uses:

1. The information on this form will be treated confidentially to the extent allowed under the Freedom of Information Act (5 U.S.C. 552) and the Privacy Act (5 U.S.C 552a). Records from this system of records may be disclosed to the Department of Justice to determine whether disclosure of these records is required by the Freedom of Information Act.
2. A record from this system of records may be disclosed, as a routine use, in the course of presenting evidence to a court, magistrate, or administrative tribunal, including disclosures to opposing counsel in the course of settlement negotiations.
3. A record in this system of records may be disclosed, as a routine use, to a Member of Congress submitting a request involving an individual, to whom the record pertains, when the individual has requested assistance from the Member with respect to the subject matter of the record.
4. A record in this system of records may be disclosed, as a routine use, to a contractor of the Agency having need for the information in order to perform a contract. Recipients of information shall be required to comply with the requirements of the Privacy Act of 1974, as amended, pursuant to 5 U.S.C. 552a(m).
5. A record related to an International Application filed under the Patent Cooperation Treaty in this system of records may be disclosed, as a routine use, to the International Bureau of the World Intellectual Property Organization, pursuant to the Patent Cooperation Treaty.
6. A record in this system of records may be disclosed, as a routine use, to another federal agency for purposes of National Security review (35 U.S.C. 181) and for review pursuant to the Atomic Energy Act (42 U.S.C. 218(c)).
7. A record from this system of records may be disclosed, as a routine use, to the Administrator, General Services, or his/her designee, during an inspection of records conducted by GSA as part of that agency's responsibility to recommend improvements in records management practices and programs, under authority of 44 U.S.C. 2904 and 2906. Such disclosure shall be made in accordance with the GSA regulations governing inspection of records for this purpose, and any other relevant (*i.e.*, GSA or Commerce) directive. Such disclosure shall not be used to make determinations about individuals.
8. A record from this system of records may be disclosed, as a routine use, to the public after either publication of the application pursuant to 35 U.S.C. 122(b) or issuance of a patent pursuant to 35 U.S.C. 151. Further, a record may be disclosed, subject to the limitations of 37 CFR 1.14, as a routine use, to the public if the record was filed in an application which became abandoned or in which the proceedings were terminated and which application is referenced by either a published application, an application open to public inspection or an issued patent.
9. A record from this system of records may be disclosed, as a routine use, to a Federal, State, or local law enforcement agency, if the USPTO becomes aware of a violation or potential violation of law or regulation.

UNITED STATES PATENT AND TRADEMARK OFFICE

Commissioner for Patents
United States Patent and Trademark Office
P.O. Box 1450
Alexandria, VA 22313-1450
www.uspto.gov

BROWDY AND NEIMARK, P.L.L.C.
624 NINTH STREET, NW
SUITE 300
WASHINGTON DC 20001-5303

COPY MAILED

NOV 06 2008

OFFICE OF PETITIONS

In re Application of	:	
Althoff et al.	:	
Application No. 29/253,734	:	DECISION ON PETITION
Filed: February 13, 2006	:	
Attorney Docket No. ALTHOFF 2	:	

This is a decision on the renewed petition under 37 CFR 1.137(b), filed October 28, 2008, to revive the above-identified design application.

The petition is **GRANTED**.

This application became abandoned for failure to timely submit Corrected Drawings on or before June 20, 2008, as required by the Notice of Allowability mailed March 20, 2008. Accordingly, the date of abandonment of this application is June 21, 2008. A Notice of Abandonment was mailed August 15, 2008.

Petitioner has now complied with 37 CFR 1.137(b) (4) by submitting the requisite terminal disclaimer and fee.

The request for a terminal disclaimer is accepted and has been made of record.

Telephone inquiries concerning this decision should be directed to Joan Olszewski at (571) 272-7751.

This application is being referred to the Office of Data Management for processing into a patent and review of the drawings previously submitted on August 22, 2008.

/Liana Walsh/
Liana Walsh
Petitions Examiner
Office of Petitions

PTO/SB/27 (05-03)
Approved for use through 04/30/2003. OMB 0651-0031
U.S. Patent and Trademark Office; U.S. DEPARTMENT OF COMMERCE
Under the Paperwork Reduction Act of 1995, no persons are required to respond to a collection of information unless it displays a valid OMB control number.

REQUEST FOR EXPEDITED EXAMINATION OF A DESIGN APPLICATION (37 CFR 1.155)

Application Number	TBD
Filing Date	Herewith
First Named Inventor	Maximilian Philip BURTON
Title	Portion Of A WATCH
Atty Docket Number	015127.00635

11:000 U.S. PTO
29/253745
021306

HAND DELIVER TO THE DESIGN GROUP DIRECTOR'S OFFICE
-or- ADDRESS TO:
MAIL STOP EXPEDITED DESIGN
COMMISSIONER FOR PATENTS
P.O. Box 1450
Alexandria, VA 22313-1450

This is a request for expedited examination of a design application under 37 CFR 1.155.

NOTE: If the Request made by this form accompanies original application papers, include form PTO/SB/18 "Design Patent Application Transmittal" or its equivalent.

A preexamination search was conducted. The field of search was:

D10/ 30, 31, 32, 33, 34, 35, 38, 39, 122, 123, 124, 125, 126, 128, 131, 132

D11/ 3, 4, 5, 6,

63/ 21, 22, 24

224/ 164, 168, 170

368/ 82, 83, 84, 239, 240, 241, 242, 276, 277; 281, 282, 283

968/ 346, 359

Approved 3/7/06
Jacqueline M. Stone
Jacqueline M. Stone, Director
Technology Center 1700

Related applications: Attorney Docket Nos: 015127.00636 and 015127.00637

If not previously filed for the above-identified application, the following items required by 37 CFR 1.155 are enclosed:

Formal drawings (see 37 CFR 1.84).

The fee set forth in 37 CFR 1.17(k).

An information disclosure statement in compliance with 37 CFR 1.98.

February 13, 2006
Date

Signature

202-824-3000
Telephone Number

Darrell G. Mottley, Reg. No. 42,912
Typed or printed name

WARNING: Information on this form may become public. Credit card information should not be included on this form. Provide credit card information and authorization on PTO-2038.

This collection of information is required by 37 CFR 1.155. The information is required to obtain or retain a benefit by the public which is to file (and by the USPTO to process) an application. Confidentiality is governed by 35 U.S.C. 122 and 37 CFR 1.14. This collection is estimated to take 6 minutes to complete, including gathering, preparing, and submitting the completed application form to the USPTO. Time will vary depending upon the individual case. Any comments on the amount of time you require to complete this form and/or suggestions for reducing this burden, should be sent to the Chief Information Officer, U.S. Patent and Trademark Office, U.S. Department of Commerce, P.O. Box 1450, Alexandria, VA 22313-1450. DO NOT SEND FEES OR COMPLETED FORMS TO THIS ADDRESS. SEND TO: Mail Stop Expedited Design, Commissioner for Patents, P.O. Box 1450, Alexandria, VA 22313-1450.

02/14/2006 LWONDIN1 00000106 190733 29253745
04 FC:1802 900.00 DA

PTO/SB/27 (05-03)
Approved for use through 04/30/2003. OMB 0651-0031
U.S. Patent and Trademark Office; U.S. DEPARTMENT OF COMMERCE
Under the Paperwork Reduction Act of 1995, no persons are required to respond to a collection of information unless it displays a valid OMB control number.

REQUEST FOR EXPEDITED EXAMINATION OF A DESIGN APPLICATION (37 CFR 1.155)

Application Number	TBD
Filing Date	Herewith
First Named Inventor	Maximilian Philip BURTON
Title	Portion Of A WATCH
Atty Docket Number	015127.00630

113000 U.S. PTO
29/253746
021306

HAND DELIVER TO THE DESIGN GROUP DIRECTOR'S OFFICE
-or- ADDRESS TO:
MAIL STOP EXPEDITED DESIGN
COMMISSIONER FOR PATENTS
P.O. Box 1450
Alexandria, VA 22313-1450

This is a request for expedited examination of a design application under 37 CFR 1.155.

NOTE: If the Request made by this form accompanies original application papers, include form PTO/SB/18 "Design Patent Application Transmittal" or its equivalent.

Approved 3/6/06
Jacqueline M. Stone
Jacqueline M. Stone, Director
Technology Center 1700

A preexamination search was conducted. The field of search was:

D10/ 30, 31, 32, 33, 34, 35, 38, 39, 122, 123, 124, 125, 126, 128, 131, 132

D11/ 3, 4, 5, 6,

63/ 21, 22, 24

224/ 164, 168, 170

368/ 82, 83, 84, 239, 240, 241, 242, 276, 277, 281, 282, 283

968/ 346, 359

Related applications: Attorney Docket Nos.: 015127.00629 and 015127.00631

If not previously filed for the above-identified application, the following items required by 37 CFR 1.155 are enclosed:

Formal drawings (see 37 CFR 1.84).

The fee set forth in 37 CFR 1.17(k).

An information disclosure statement in compliance with 37 CFR 1.98.

February 13, 2006
Date

Signature

202-824-3000
Telephone Number

Darrell G. Mottley, Reg. No. 42,912
Typed or printed name

WARNING: Information on this form may become public. Credit card information should not be included on this form. Provide credit card information and authorization on PTO-2038.

This collection of information is required by 37 CFR 1.155. The information is required to obtain or retain a benefit by the public which is to file (and by the USPTO to process) an application. Confidentiality is governed by 35 U.S.C. 122 and 37 CFR 1.14. This collection is estimated to take 6 minutes to complete, including gathering, preparing, and submitting the completed application form to the USPTO. Time will vary depending upon the individual case. Any comments on the amount of time you require to complete this form and/or suggestions for reducing this burden, should be sent to the Chief Information Officer, U.S. Patent and Trademark Office, U.S. Department of Commerce, P.O. Box 1450, Alexandria, VA 22313-1450. DO NOT SEND FEES OR COMPLETED FORMS TO THIS ADDRESS. SEND TO: Mail Stop Expedited Design, Commissioner for Patents, P.O. Box 1450, Alexandria, VA 22313-1450.

If you need assistance in completing the form, call 1-800-PTO-9199 and select option 2.

02/14/2006 LWONDIM1 00000107 190733 29253746
04 FC:1802 900.00 DA

PTO/SB/27 (05-03)
Approved for use through 04/30/2003. OMB 0651-0031
U.S. Patent and Trademark Office; U.S. DEPARTMENT OF COMMERCE
Under the Paperwork Reduction Act of 1995, no persons are required to respond to a collection of information unless it displays a valid OMB control number.

REQUEST FOR EXPEDITED EXAMINATION OF A DESIGN APPLICATION (37 CFR 1.155)

Application Number	TBD
Filing Date	Herewith
First Named Inventor	Maximillian Philip BURTON
Title	Portion Of A WATCH
Atty Docket Number	015127.00636

113000 U.S. PTO
29/253747
021306

HAND DELIVER TO THE DESIGN GROUP DIRECTOR'S OFFICE
-or- ADDRESS TO:
MAIL STOP EXPEDITED DESIGN
COMMISSIONER FOR PATENTS
P.O. Box 1450
Alexandria, VA 22313-1450

This is a request for expedited examination of a design application under 37 CFR 1.155.

NOTE: If the Request made by this form accompanies original application papers, include form PTO/SB/18 "Design Patent Application Transmittal" or its equivalent.

Approved
Jacqueline M. Stone
Jacqueline M. Stone, Director
Technology Center 1700
3/7/04

A preexamination search was conducted. The field of search was:

D10/ 30, 31, 32, 33, 34, 35, 38, 39, 122, 123, 124, 125, 126, 128, 131, 132

D11/ 3, 4, 5, 6,

63/ 21, 22, 24

224/ 164, 168, 170

368/ 82, 83, 84, 239, 240, 241, 242, 276, 277, 281, 282, 283

968/ 346, 359

Related applications: Attorney Docket Nos.: 015127.00635 and 015127.00637

If not previously filed for the above-identified application, the following items required by 37 CFR 1.155 are enclosed:

Formal drawings (see 37 CFR 1.84).

The fee set forth in 37 CFR 1.17(k).

An information disclosure statement in compliance with 37 CFR 1.98.

February 13, 2006
Date

Signature

202-824-3000
Telephone Number

Darrell G. Mottley, Reg. No. 42,912
Typed or printed name

WARNING: Information on this form may become public. Credit card information should not be included on this form. Provide credit card information and authorization on PTO-2038.

This collection of information is required by 37 CFR 1.155. The information is required to obtain or retain a benefit by the public which is to file (and by the USPTO to process) an application. Confidentiality is governed by 35 U.S.C. 122 and 37 CFR 1.14. This collection is estimated to take 6 minutes to complete, including gathering, preparing, and submitting the completed application form to the USPTO. Time will vary depending upon the individual case. Any comments on the amount of time you require to complete this form and/or suggestions for reducing this burden, should be sent to the Chief Information Officer, U.S. Patent and Trademark Office, U.S. Department of Commerce, P.O. Box 1450, Alexandria, VA 22313-1450. DO NOT SEND FEES OR COMPLETED FORMS TO THIS ADDRESS. SEND TO: Mail Stop Expedited Design, Commissioner for Patents, P.O. Box 1450, Alexandria, VA 22313-1450.

If you need assistance in completing the form, call 1-800-PTO-9199 and select option 2.

02/14/2006 LWONDTAI 00000108 190733 29253747
04 FC:1802 900.00 DA

PTO/SB/27 (05-03)
Approved for use through 04/30/2003. OMB 0651-0031
U.S. Patent and Trademark Office; U.S. DEPARTMENT OF COMMERCE
Under the Paperwork Reduction Act of 1995, no persons are required to respond to a collection of information unless it displays a valid OMB control number.

REQUEST FOR EXPEDITED EXAMINATION OF A DESIGN APPLICATION (37 CFR 1.155)

Application Number	TBD
Filing Date	Herewith
First Named Inventor	Maximilian Philip BURTON
Title	Portion Of A WATCH
Atty Docket Number	015127.00631

11/3000 U.S. PTO
29/253748
021306

HAND DELIVER TO THE DESIGN GROUP DIRECTOR'S OFFICE
-or- ADDRESS TO:
MAIL STOP EXPEDITED DESIGN
COMMISSIONER FOR PATENTS
P.O. Box 1450
Alexandria, VA 22313-1450

This is a request for expedited examination of a design application under 37 CFR 1.155.

NOTE: If the Request made by this form accompanies original application papers, include form PTO/SB/18 "Design Patent Application Transmittal" or its equivalent.

3/7/06
Approved
Jacqueline M. Stone
Jacqueline M. Stone, Director
Technology Center 1700

A preexamination search was conducted. The field of search was:

D10/ 30, 31, 32, 33, 34, 35, 38, 39, 122, 123, 124, 125, 126, 128, 131, 132

D11/ 3, 4, 5, 6,

63/ 21, 22, 24

224/ 164, 168, 170

368/ 82, 83, 84, 239, 240, 241, 242, 276, 277, 281, 282, 283

968/ 346, 359

Related applications: Attorney Docket Nos.: 015127.00629 and 015127.00630

If not previously filed for the above-identified application, the following items required by 37 CFR 1.155 are enclosed:

Formal drawings (see 37 CFR 1.84).

The fee set forth in 37 CFR 1.17(k).

An information disclosure statement in compliance with 37 CFR 1.98.

February 13, 2006
Date

Signature

202-824-3000
Telephone Number

Darrell G. Mottley, Reg. No. 42,912
Typed or printed name

WARNING: Information on this form may become public. Credit card information should not be included on this form. Provide credit card information and authorization on PTO-2038.

This collection of information is required by 37 CFR 1.155. The information is required to obtain or retain a benefit by the public which is to file (and by the USPTO to process) an application. Confidentiality is governed by 35 U.S.C. 122 and 37 CFR 1.14. This collection is estimated to take 6 minutes to complete, including gathering, preparing, and submitting the completed application form to the USPTO. Time will vary depending upon the individual case. Any comments on the amount of time you require to complete this form and/or suggestions for reducing this burden, should be sent to the Chief Information Officer, U.S. Patent and Trademark Office, U.S. Department of Commerce, P.O. Box 1450, Alexandria, VA 22313-1450. DO NOT SEND FEES OR COMPLETED FORMS TO THIS ADDRESS. SEND TO: Mail Stop Expedited Design, Commissioner for Patents, P.O. Box 1450, Alexandria, VA 22313-1450.

If you need assistance in completing the form, call 1-800-PTO-9199 and select option 2.

02/14/2006 LWONDIM1 00000109 29253748
04 FC:1802 900.00 DA

PTO/SB/27 (05-03)
Approved for use through 04/30/2003. OMB 0651-0031
U.S. Patent and Trademark Office; U.S. DEPARTMENT OF COMMERCE
Under the Paperwork Reduction Act of 1995, no persons are required to respond to a collection of information unless it displays a valid OMB control number.

REQUEST FOR EXPEDITED EXAMINATION OF A DESIGN APPLICATION (37 CFR 1.155)

Application Number	TBD
Filing Date	Herewith
First Named Inventor	Maximilian Philip BURTON
Title	Portion Of A WATCH
Atty Docket Number	015127.00629

113000 U.S. PTO
29/253749
021306

HAND DELIVER TO THE DESIGN GROUP DIRECTOR'S OFFICE
-or- ADDRESS TO:
MAIL STOP EXPEDITED DESIGN
COMMISSIONER FOR PATENTS
P.O. Box 1450
Alexandria, VA 22313-1450

This is a request for expedited examination of a design application under 37 CFR 1.155.

NOTE: If the Request made by this form accompanies original application papers, include form PTO/SB/18 "Design Patent Application Transmittal" or its equivalent.

Approved 3/7/06
Jacqueline M. Stone
Jacqueline M. Stone, Director
Technology Center 1700

A preexamination search was conducted. The field of search was:

D10/ 30, 31, 32, 33, 34, 35, 38, 39, 122, 123, 124, 125, 126, 128, 131, 132

D11/ 3, 4, 5, 6,

63/ 21, 22, 24

224/ 164, 168, 170

368/ 82, 83, 84, 239, 240, 241, 242, 276, 277, 281, 282, 283

968/ 346, 359

Related applications: Attorney Docket Nos: 015127.00630 and 015127.00631

If not previously filed for the above-identified application, the following items required by 37 CFR 1.155 are enclosed:

Formal drawings (see 37 CFR 1.84).

The fee set forth in 37 CFR 1.17(k).

An information disclosure statement in compliance with 37 CFR 1.98.

February 13, 2006
Date

Signature

202-824-3000
Telephone Number

Darrell G. Mottley, Reg. No. 42,912
Typed or printed name

WARNING: Information on this form may become public. Credit card information should not be included on this form. Provide credit card information and authorization on PTO-2038.

02/14/2006 LWONDIM1 00000110 190733 29253749
04 FC:1802 900.00 DA

This collection of information is required by 37 CFR 1.155. The information is required to obtain or retain a benefit by the public which is to file (and by the USPTO to process) an application. Confidentiality is governed by 35 U.S.C. 122 and 37 CFR 1.14. This collection is estimated to take 6 minutes to complete, including gathering, preparing, and submitting the completed application form to the USPTO. Time will vary depending upon the individual case. Any comments on the amount of time you require to complete this form and/or suggestions for reducing this burden, should be sent to the Chief Information Officer, U.S. Patent and Trademark Office, U.S. Department of Commerce, P.O. Box 1450, Alexandria, VA 22313-1450. DO NOT SEND FEES OR COMPLETED FORMS TO THIS ADDRESS. SEND TO: Mail Stop Expedited Design, Commissioner for Patents, P.O. Box 1450, Alexandria, VA 22313-1450.

If you need assistance in completing the form, call 1-800-PTO-9199 and select option 2.

BEST AVAILABLE COPY

PTO/SB/27 (05-03)
Approved for use through 04/30/2003. OMB 0651-0031
U.S. Patent and Trademark Office; U.S. DEPARTMENT OF COMMERCE
Under the Paperwork Reduction Act of 1995, no persons are required to respond to a collection of information unless it displays a valid OMB control number.

REQUEST FOR EXPEDITED EXAMINATION OF A DESIGN APPLICATION (37 CFR 1.155)

Application Number	TBD
Filing Date	Herewith
First Named Inventor	Maximilian Philip BURTON
Title	Portion Of A WATCH
Atty Docket Number	015127.00637

13000 U.S. PTO
29/253750
021306

HAND DELIVER TO THE DESIGN GROUP DIRECTOR'S OFFICE
-or- ADDRESS TO:
MAIL STOP EXPEDITED DESIGN
COMMISSIONER FOR PATENTS
P.O. Box 1450
Alexandria, VA 22313-1450

This is a request for expedited examination of a design application under 37 CFR 1.155.

NOTE: If the Request made by this form accompanies original application papers, include form PTO/SB/18 "Design Patent Application Transmittal" or its equivalent.

A preexamination search was conducted. The field of search was:

D10/ 30, 31, 32, 33, 34, 35, 38, 39, 122, 123, 124, 125, 126, 128, 131, 132

D11/ 3, 4, 5, 6,

63/ 21, 22, 24

224/ 164, 168, 170

368/ 82, 83, 84, 239, 240, 241, 242, 276, 277, 281, 282, 283

968/ 346, 359

Approved 3/6/06
Jacqueline M. Stone
Jacqueline M. Stone, Director
Technology Center 1700

Related applications: Attorney Docket Nos.: 015127.00635 and 015127.00636

If not previously filed for the above-identified application, the following items required by 37 CFR 1.155 are enclosed:

Formal drawings (see 37 CFR 1.84).

The fee set forth in 37 CFR 1.17(k).

An information disclosure statement in compliance with 37 CFR 1.98.

February 13, 2006
Date

Signature

202-824-3000
Telephone Number

Darrell G. Mottley, Reg. No. 42,912
Typed or printed name

WARNING: Information on this form may become public. Credit card information should not be included on this form. Provide credit card information and authorization on PTO-2038.

This collection of information is required by 37 CFR 1.155. The information is required to obtain or retain a benefit by the public which is to file (and by the USPTO to process) an application. Confidentiality is governed by 35 U.S.C. 122 and 37 CFR 1.14. This collection is estimated to take 6 minutes to complete, including gathering, preparing, and submitting the completed application form to the USPTO. Time will vary depending upon the individual case. Any comments on the amount of time you require to complete this form and/or suggestions for reducing this burden, should be sent to the Chief Information Officer, U.S. Patent and Trademark Office, U.S. Department of Commerce, P.O. Box 1450, Alexandria, VA 22313-1450. DO NOT SEND FEES OR COMPLETED FORMS TO THIS ADDRESS. SEND TO: Mail Stop Expedited Design, Commissioner for Patents, P.O. Box 1450, Alexandria, VA 22313-1450.

If you need assistance in completing the form, call 1-800-PTO-9199 and select option 2.

02/14/2006 LWONDIM1 00000111 190733 29253750
05 FC:1802 900.00 DA

180-

17648 U.S. PTO
021306

PTO/SB/27 (09-04)
Approved for use through 07/31/2006. OMB 0651-0031
U.S. Patent and Trademark Office; U.S DEPARTMENT OF COMMERCE
Under the Paperwork Reduction ACT of 1995, no persons are required to respond to collection of information unless it displays a valid OMB control number.

REQUEST FOR EXPEDITED EXAMINATION OF A DESIGN APPLICATION (37 CFR 1.155)

Application Number	
Filing Date	
First Named Inventor	Brandon Joshua Ezra
Title	
Atty Docket Number	

113006 U.S. PTO
29/253767
021306

ADDRESS TO:

MAIL STOP EXPEDITED DESIGN
COMMISSIONER FOR PATENTS
P.O. Box 1450
Alexandria, VA 22313-1450

Approved 3/6/06
Jacqueline M. Stone
Jacqueline M. Stone, Director
Technology Center 1700

This is a request for expedited examination of a design application under 37 CFR 1.155.

NOTE: If the Request made by this form accompanies original application papers, include form PTO/SB/18 "Design Patent Application Transmittal" or its equivalent.

A preexamination search was conducted. The field of search was:

Please view the attached page called "motorcycle carrier, Expedited Design Patent Application" All search fields are mentioned. Thank you.

Related applications: _____

If not previously filed for the above-identified application, the following items required by 37 CFR 1.155 are enclosed:

- Formal drawings (see 37 CFR 1.84).
- The fee set forth in 37 CFR 1.17(k).
- An information disclosure statement in compliance with 37 CFR 1.98.

Brandon Ezra...	2/07/06
Signature	Date
Brandon Joshua Ezra	
Typed or printed name	Registration Number, if applicable
574-278-7156	
Telephone Number	

WARNING: Information on this form may become public. Credit card information should not be included on this form. Provide credit card information and authorization on PTO-2038.

This collection of information is required by 37 CFR 1.155. The information is required to obtain or retain a benefit by the public which is to file (and by the USPTO to process) an application. Confidentiality is governed by 35 U.S.C. 122 and 37 CFR 1.11 and 1.14. This collection is estimated to take 6 minutes to complete, including gathering, preparing, and submitting the completed application form to the USPTO. Time will vary depending upon the individual case. Any comments on the amount of time you require to complete this form and/or suggestions for reducing this burden, should be sent to the Chief Information Officer, U.S. Patent and Trademark Office, U.S. Department of Commerce, P.O. Box 1450, Alexandria, VA 22313-1450. DO NOT SEND FEES OR COMPLETED FORMS TO THIS ADDRESS. SEND TO: Commissioner for Patents, P.O. Box 1450, Alexandria, VA 22313-1450.

If you need assistance in completing the form, call 1-800-PTO-9199 and select option 2.

02/15/2006 HDEMESS1 00000029 29253767

01 FC:1802 900.00 OP

113006 U.S. PTO
29/253767
021306

Motorcycle Carrier

Expedited Design Patent Application

I would please like to request that this design patent application be expedited.

I have performed a preexamination search and included the fields of search and information disclosed on form SB08: Information Disclosure Statement by Applicant

The fields in which a search has been performed are as follows:

224/402; 224/495, 224/497; 500-0511; 224/515; 224/500,510,924,521,523, 524,525,526,527,528,529,530,534;224/924;
410/3,11, 462, 463; 464, 468,470, 466, 469, 474-485,491, 494,
521, 524, 525, 526,527, 528, 529, 530, 531,534, 536, 537,
214/1 SW,450,451,452,453,454,505 224/29 R,29 L,42.03 A,42.03 R,42.03B, 42.44, 273, 282, 42.08 211/22; 224/42.03 R, 42.03 A, 273, 42.07, 42.43, 42.44
280/769,763.1, 477, 43.1, 43, 62, 64, 511;
D12/408;

A check for the expedited examination fee of $900 has been included.

Thank you

Sincerely,

Brandon Ezra

UNITED STATES PATENT AND TRADEMARK OFFICE

Commissioner for Patents
United States Patent and Trademark Office
Washington, D.C. 20231
www.uspto.gov

ELSIE C. TURNER
SUITE 204
201 PARK PLACE
ALTAMONTE SPRINGS FL 32701

COPY MAILED

SEP 17 2007

OFFICE OF PETITIONS

ON PETITION

In re Application of
Robert Lewis
Application No. 29/253,802
Filed: February 13, 2006
Title of Invention: **STORAGE CONTAINER AND CADDY**

This is a decision on the petition filed August 30, 2007, to withdraw the holding of abandonment, which is being treated under 37 CFR 1.181(b), in accordance with the reasoning of the decision in Delgar Inc. v. Schuyler, 172 USPQ 513.

The petition is **GRANTED**.

This application became abandoned for failure to pay the issue fee on or before July 10, 2007 as was required by the Notice of Allowance mailed April 10, 2007. This application therefore became abandoned on July 11, 2007. Accordingly, a Notice of Abandonment was mailed August 6, 2007.

The file record discloses that the Notice of Allowance was mailed to the address of record, the address also used for mailing the Notice of Abandonment which was in fact received, however, petitioner contends that it was not received. In support, petitioner indicates that a search of the records used for tracking matters related to the instant application and that of the entire firm revealed that the Notice was not received and submits copies of pages from the docketing system, wherein receipt of the Notice of Allowance would have been entered, had it been received, to substantiate the claim. The statement and attachments corroborate non-receipt of the Notice of Allowance.

In view of the facts set forth in the petition, it is concluded that the Notice of Allowance was never received. Accordingly, the holding of abandonment is withdrawn. Since no petition fee is therefore due no petition fees have been charged.

This matter will be referred to Technology Center 2914 for a re-mailing of the Notice of Allowance and Notice of Allowability originally mailed on April 10, 2007.

Telephone inquiries concerning this matter may be directed to the undersigned Petitions Attorney at (571) 272-3212.

Patricia Faison-Ball

Patricia Faison-Ball
Senior Petitions Attorney
Office of Petitions

UNITED STATES PATENT AND TRADEMARK OFFICE

Commissioner for Patents
United States Patent and Trademark Office
P.O. Box 1450
Alexandria, VA 22313-1450
www.uspto.gov

OBLON, SPIVAK, McCLELLAND,
Maier & NEUSTADT PC
1940 DUKE STREET
ALEXANDRIA, VA 22314

COPY MAILED

APR 2 7 2007

OFFICE OF PETITIONS

In re Application of	:
Michael Lammel et al	:DECISION GRANTING PETITION
Application No. 29/253,832	:UNDER 37 CFR 1.313(c)(3)
Filed: February 14, 2006	:
Attorney Docket No. 285840US3DES DIV	:

This is a decision on the petition under 37 CFR 1.313(c)(3), filed April 24, 2007 and supplemented on April 26, 2007, to withdraw the above-identified application from issue after payment of the issue fee.

The petition is **GRANTED**.

The above-identified application is hereby withdrawn from issue in favor of a continued prosecution application (CPA) under 37 CFR 1.53(d).

Petitioner is advised that the issue fee paid on October 11, 2006 in the parent application is not refundable nor can it be applied towards any new Notice of Allowance which may issue on the CPA filed April 26, 2007.

Petitioner also requests that the fees submitted with the petition on April 24, 2007 be refunded. As no fees were charged to petitioner's credit card for the petition to withdraw from issue and the improper RCE filed on April 24, 2007, no refund is due.

Telephone inquiries should be directed to the undersigned at (571) 272-3218.

This matter is being referred to Technology Center AU 2914 for processing of the CPA and consideration of the amendment.

Frances Hicks
Petitions Examiner
Office of Petitions

PTO/SB/27 (05-03)
Approved for use through 04/30/2003. OMB 0651-0031
U.S. Patent and Trademark Office; U.S. DEPARTMENT OF COMMERCE
Under the Paperwork Reduction Act of 1995, no persons are required to respond to a collection of information unless it displays a valid OMB control number.

REQUEST FOR EXPEDITED EXAMINATION OF A DESIGN APPLICATION (37 CFR 1.155)

Application Number	TO BE ASSIGNED
Filing Date	February 14, 2006
First Named Inventor	Maximillian Philip Burton
Title	Portion Of A Watch
Atty Docket Number	015127.00641

113000 U.S.PTO
29/253838
021406

HAND DELIVER TO THE DESIGN GROUP DIRECTOR'S OFFICE
-or- ADDRESS TO:
MAIL STOP EXPEDITED DESIGN
COMMISSIONER FOR PATENTS
P.O. Box 1450
Alexandria, VA 22313-1450

This is a request for expedited examination of a design application under 37 CFR 1.155.

NOTE: If the Request made by this form accompanies original application papers, include form PTO/SB/18 "Design Patent Application Transmittal" or its equivalent.

A preexamination search was conducted. The field of search was:

Class D10/30, 31, 32, 33, 34, 35, 38, 39, 122, 123, 124, 125, 126, 128, 131, 132; Class D11/3, 4, 5, 6;

Class 63/21, 22, 24; Class 224/164, 168, 170; Class 368/82, 83, 84, 239, 240, 241, 242, 276, 277, 281, 282, 283; and

Class 968/346,359

Related applications: _____

If not previously filed for the above-identified application, the following items required by 37 CFR 1.155 are enclosed:

Formal drawings (see 37 CFR 1.84).

The fee set forth in 37 CFR 1.17(k).

An information disclosure statement in compliance with 37 CFR 1.98.

Approved 3/6/06
Jacqueline M. Stone
Jacqueline M. Stone, Director
Technology Center 1700

February 14, 2006
Date

David R. Gerk
Signature

202-824-3000
Telephone Number

David R. Gerk-Registration No. 56,901
Typed or printed name

WARNING: Information on this form may become public. Credit card information should not be included on this form. Provide credit card information and authorization on PTO-2038.

This collection of information is required by 37 CFR 1.155. The information is required to obtain or retain a benefit by the public which is to file (and by the USPTO to process) an application. Confidentiality is governed by 35 U.S.C. 122 and 37 CFR 1.14. This collection is estimated to take 6 minutes to complete, including gathering, preparing, and submitting the completed application form to the USPTO. Time will vary depending upon the individual case. Any comments on the amount of time you require to complete this form and/or suggestions for reducing this burden, should be sent to the Chief Information Officer, U.S. Patent and Trademark Office, U.S. Department of Commerce, P.O. Box 1450, Alexandria, VA 22313-1450. DO NOT SEND FEES OR COMPLETED FORMS TO THIS ADDRESS. SEND TO: Mail Stop Expedited Design, Commissioner for Patents, P.O. Box 1450, Alexandria, VA 22313-1450.

02/16/2006 MBELETE1 00000008 190733 29253838
04 FC:1802 900.00 DA

PTO/SB/27 (05-03)
Approved for use through 04/30/2003. OMB 0651-0031
U.S. Patent and Trademark Office; U.S. DEPARTMENT OF COMMERCE
Under the Paperwork Reduction Act of 1995, no persons are required to respond to a collection of information unless it displays a valid OMB control number.

REQUEST FOR EXPEDITED EXAMINATION OF A DESIGN APPLICATION (37 CFR 1.155)

Application Number	TO BE ASSIGNED
Filing Date	February 14, 2006
First Named Inventor	Maximillian Philip Burton
Title	Portion Of A Watch
Atty Docket Number	015127.00643

113000 U.S. PTO
29/253839
021406

HAND DELIVER TO THE DESIGN GROUP DIRECTOR'S OFFICE
-or- ADDRESS TO:
MAIL STOP EXPEDITED DESIGN
COMMISSIONER FOR PATENTS
P.O. Box 1450
Alexandria, VA 22313-1450

This is a request for expedited examination of a design application under 37 CFR 1.155.

NOTE: If the Request made by this form accompanies original application papers, include form PTO/SB/18 "Design Patent Application Transmittal" or its equivalent.

A preexamination search was conducted. The field of search was:

Class D10/30, 31, 32, 33, 34, 35, 38, 39, 122, 123, 124, 125, 126, 128, 131, 132; Class D11/3, 4, 5, 6;

Class 63/21, 22, 24; Class 224/164, 168, 170; Class 368/82, 83, 84, 239, 240, 241, 242, 276, 277, 281, 282, 283; and

Class 968/346,359

Related applications: _____

If not previously filed for the above-identified application, the following items required by 37 CFR 1.155 are enclosed:

Formal drawings (see 37 CFR 1.84).

The fee set forth in 37 CFR 1.17(k).

An information disclosure statement in compliance with 37 CFR 1.98.

Approved 3/6/06
Jacqueline M. Stone
Jacqueline M. Stone, Director
Technology Center 1700

February 14, 2006
Date

David R. Gerk
Signature

202-824-3000
Telephone Number

David R. Gerk-Registration No. 56,901
Typed or printed name

WARNING: Information on this form may become public. Credit card information should not be included on this form. Provide credit card information and authorization on PTO-2038.

This collection of information is required by 37 CFR 1.155. The information is required to obtain or retain a benefit by the public which is to file (and by the USPTO to process) an application. Confidentiality is governed by 35 U.S.C. 122 and 37 CFR 1.14. This collection is estimated to take 6 minutes to complete, including gathering, preparing, and submitting the completed application form to the USPTO. Time will vary depending upon the individual case. Any comments on the amount of time you require to complete this form and/or suggestions for reducing this burden, should be sent to the Chief Information Officer, U.S. Patent and Trademark Office, U.S. Department of Commerce, P.O. Box 1450, Alexandria, VA 22313-1450. DO NOT SEND FEES OR COMPLETED FORMS TO THIS ADDRESS. SEND TO: Mail Stop Expedited Design, Commissioner for Patents, P.O. Box 1450, Alexandria, VA 22313-1450.

02/16/2006 MBELETE1 00000009 190733 29253839
04 FC:1802 900.00 DA

PTO/SB/27 (05-03)
Approved for use through 04/30/2003. OMB 0651-0031
U.S. Patent and Trademark Office; U.S. DEPARTMENT OF COMMERCE
Under the Paperwork Reduction Act of 1995, no persons are required to respond to a collection of information unless it displays a valid OMB control number.

REQUEST FOR EXPEDITED EXAMINATION OF A DESIGN APPLICATION (37 CFR 1.155)

Application Number	TO BE ASSIGNED
Filing Date	February 14, 2006
First Named Inventor	Maximillian Philip Burton
Title	Portion Of A Watch
Atty Docket Number	015127.00645

13000 U.S. PTO
29/253840
021406

HAND DELIVER TO THE DESIGN GROUP DIRECTOR'S OFFICE
-or- ADDRESS TO:
MAIL STOP EXPEDITED DESIGN
COMMISSIONER FOR PATENTS
P.O. Box 1450
Alexandria, VA 22313-1450

This is a request for expedited examination of a design application under 37 CFR 1.155.

NOTE: If the Request made by this form accompanies original application papers, include form PTO/SB/18 "Design Patent Application Transmittal" or its equivalent.

A preexamination search was conducted. The field of search was:

Class D10/30, 31, 32, 33, 34, 35, 38, 39, 122, 123, 124, 125, 126, 128, 131, 132; Class D11/3, 4, 5, 6;

Class 63/21, 22, 24; Class 224/164, 168, 170; Class 368/82, 83, 84, 239, 240, 241, 242, 276, 277, 281, 282, 283; and

Class 968/346,359

3/6/06

Approved
Jacqueline M. Stone
Jacqueline M. Stone, Director
Technology Center 1700

Related applications: _____

If not previously filed for the above-identified application, the following items required by 37 CFR 1.155 are enclosed:

Formal drawings (see 37 CFR 1.84).

The fee set forth in 37 CFR 1.17(k).

An information disclosure statement in compliance with 37 CFR 1.98.

February 14, 2006
Date

David R. Gerk
Signature

202-824-3000
Telephone Number

David R. Gerk-Registration No. 56,901
Typed or printed name

WARNING: Information on this form may become public. Credit card information should not be included on this form. Provide credit card information and authorization on PTO-2038.

This collection of information is required by 37 CFR 1.155. The information is required to obtain or retain a benefit by the public which is to file (and by the USPTO to process) an application. Confidentiality is governed by 35 U.S.C. 122 and 37 CFR 1.14. This collection is estimated to take 6 minutes to complete, including gathering, preparing, and submitting the completed application form to the USPTO. Time will vary depending upon the individual case. Any comments on the amount of time you require to complete this form and/or suggestions for reducing this burden, should be sent to the Chief Information Officer, U.S. Patent and Trademark Office, U.S. Department of Commerce, P.O. Box 1450, Alexandria, VA 22313-1450. DO NOT SEND FEES OR COMPLETED FORMS TO THIS ADDRESS. SEND TO: Mail Stop Expedited Design, Commissioner for Patents, P.O. Box 1450, Alexandria, VA 22313-1450.

02/16/2006 MBELETE1 00000010 190733 29253840
04 FC:1802 900.00 DA

PTO/SB/27 (05-03)
Approved for use through 04/30/2003. OMB 0651-0031
U.S. Patent and Trademark Office; U.S. DEPARTMENT OF COMMERCE
Under the Paperwork Reduction Act of 1995, no persons are required to respond to a collection of information unless it displays a valid OMB control number.

REQUEST FOR EXPEDITED EXAMINATION OF A DESIGN APPLICATION (37 CFR 1.155)

Application Number	TO BE ASSIGNED
Filing Date	February 14, 2006
First Named Inventor	Jason Gregory Petrie
Title	Portion Of A Shoe Upper
Atty Docket Number	015127.00685

113000 U.S.PTO
29/253841
021406

HAND DELIVER TO THE DESIGN GROUP DIRECTOR'S OFFICE
-or- ADDRESS TO:
MAIL STOP EXPEDITED DESIGN
COMMISSIONER FOR PATENTS
P.O. Box 1450
Alexandria, VA 22313-1450

This is a request for expedited examination of a design application under 37 CFR 1.155.

NOTE: If the Request made by this form accompanies original application papers, include form PTO/SB/18 "Design Patent Application Transmittal" or its equivalent.

A preexamination search was conducted. The field of search was:

Class D2/896, 902, 907, 908, 943, 944, 945, 946, 969, 972, 973 and 974

Related applications: _____

If not previously filed for the above-identified application, the following items required by 37 CFR 1.155 are enclosed:

Formal drawings (see 37 CFR 1.84).

The fee set forth in 37 CFR 1.17(k).

An information disclosure statement in compliance with 37 CFR 1.98.

Approved 3/6/06
Jacqueline M. Stone
Jacqueline M. Stone, Director
Technology Center 1700

February 14, 2006
Date

Signature

202-824-3000
Telephone Number

David R. Gerk-Registration No. 56,901
Typed or printed name

WARNING: Information on this form may become public. Credit card information should not be included on this form. Provide credit card information and authorization on PTO-2038.

This collection of information is required by 37 CFR 1.155. The information is required to obtain or retain a benefit by the public which is to file (and by the USPTO to process) an application. Confidentiality is governed by 35 U.S.C. 122 and 37 CFR 1.14. This collection is estimated to take 6 minutes to complete, including gathering, preparing, and submitting the completed application form to the USPTO. Time will vary depending upon the individual case. Any comments on the amount of time you require to complete this form and/or suggestions for reducing this burden, should be sent to the Chief Information Officer, U.S. Patent and Trademark Office, U.S. Department of Commerce, P.O. Box 1450, Alexandria, VA 22313-1450. DO NOT SEND FEES OR COMPLETED FORMS TO THIS ADDRESS. SEND TO: Mail Stop Expedited Design, Commissioner for Patents, P.O. Box 1450, Alexandria, VA 22313-1450.

If you need assistance in completing the form, call 1-800-PTO-9199 and select option 2.

02/16/2006 MBELETE1 00000011 190733 29253841
04 FC:1802 900.00 DA

UNITED STATES PATENT AND TRADEMARK OFFICE

OFFICE

SERIAL NUMBER	FILING DATE	FIRST NAMED APPLICANT	ATTORNEY DOCKET NO.
29/253936	02/16/06	DENG, MINGSHENG	USD3260C/SZ113-ZKD

Raymond Y. Chan
108 N. Ynez Ave. #128
Monterey Park CA 91754

EXAMINER	
ARONOVICH, ADIR	
ART UNIT	PAPER NUMBER
2916	

DATE MAILED: 9/21/07

NOTICE OF RESCINDED ABANDONMENT

☐ **In response to your communication filed** 8/14/07

☒ **Through inadvertence, a Notice of Abandonment was mailed in the above-identified application. The Notice of Abandonment is hereby rescinded.**

For [signature]
Manager, Publications Division
Office of Patent Publication
571-272-4200

UNITED STATES PATENT AND TRADEMARK OFFICE

Commissioner for Patents
United States Patent and Trademark Office
P.O. Box 1450
Alexandria, VA 22313-1450
www.uspto.gov

THE ESTEE LAUDER COS, INC
155 PINELAWN ROAD
STE 345 S
MELVILLE NY 11747

COPY MAILED

JUN 0 4 2007

OFFICE OF PETITIONS

In re Application of	:	
Stephen Burks	:	DECISION GRANTING PETITION
Application No. 29/253,939	:	UNDER 37 CFR 1.313(c)(3) (CPA)
Filed: February 15, 2006	:	
Attorney Docket No. 06.03D-US	:	

This is a decision on the petition under 37 CFR 1.313(c)(3), filed May 24, 2007, to withdraw the above-identified application from issue after payment of the issue fee.

The petition is **GRANTED**.

The above-identified application is hereby withdrawn from issue in favor of a continued prosecution application (CPA) under 37 CFR 1.53(d).

Petitioner is advised that the issue fee paid on April 18, 2007 in the parent application is not refundable nor can it be applied towards any new Notice of Allowance, which may issue on the CPA filed May 24, 2007.

Telephone inquiries should be directed to Terri Williams at (571) 272-2991.

This matter is being referred to Technology Center AU 2912 for processing of the CPA and consideration of the concurrently filed Information Disclosure Statement.

Frances Hicks
Petitions Examiner
Office of Petitions

UNITED STATES PATENT AND TRADEMARK OFFICE

Commissioner for Patents
United States Patent and Trademark Office
P.O. Box 1450
Alexandria, VA 22313-1450
www.uspto.gov

BOYLE FREDRICKSON S.C.
840 NORTH PLANKINTON AVENUE
MILWAUKEE, WI 53203

COPY MAILED

SEP 30 2008

OFFICE OF PETITIONS

In re Application of :
Patrick Jeffery Condon et al :
Application No. 29/253,956 :
Filed: February 15, 2006 :
Attorney Docket No. 1423.005 :

ON PETITION

This is a decision on the petition, filed May 15, 2008 under 37 CFR 1.137(b) to revive the above-identified application.

The petition is **DISMISSED.**

Any request for reconsideration of this decision must be submitted within TWO (2) MONTHS from the mail date of this decision. Extensions of time under 37 CFR 1.136(a) are permitted. The reconsideration request should include a cover letter entitled "**Renewed Petition under 37 CFR 1.137(b)**." This is **not** final agency action within the meaning of 5 U.S.C. § 704.

The above-identified application became abandoned for failure to submit the Issue fee in a timely manner in reply to the Notice of Allowance mailed December 18, 2007, which set a statutory period for reply of three (3) months. Accordingly, the above-identified application became abandoned on March 19, 2008.

A grantable petition under 37 CFR 1.137(b) must be accompanied by: (1) the required reply, unless previously filed; (2) the petition fee as set forth in 37 CFR 1.17(m); (3) a statement that the entire delay in filing the required reply from the due date for the reply until the filing of a grantable petition pursuant to 37 CFR 1.137(b) was unintentional; and (4) any terminal disclaimer (and fee as set forth in 37 CFR 1.20(d)) required by 37 CFR 1.137(c). Where there is a question as to whether either the abandonment or the delay in filing a petition under 37 CFR 1.137 was unintentional, the Commissioner may require additional information. See MPEP 711.03(c)(III)(C) and (D). The instant petition lack(s) item(s) (4).

The petition does not satisfies the conditions for revival pursuant to the provisions of 37 CFR 1.137(b) in that (4) the terminal disclaimer was not received. Accordingly, this petition can not be revive until the terminal disclaimer is received.

Further correspondence with respect to this matter should be addressed as follows:

By mail: Mail Stop PETITION
Commissioner for Patents
Post Office Box 1450
Alexandria, VA 22313-1450

By hand: Customer Service Window
Randolph Building
401 Dulany Street
Alexandria, VA 22314

By facsimile: (571) 273-8300
ATTN: Office of Petitions

Telephone inquiries concerning this decision should be directed to the undersigned at (571) 272-3210.

Irvin Dingle
Petitions Examiner
Office of Petitions

UNITED STATES PATENT AND TRADEMARK OFFICE

COMMISSIONER FOR PATENTS
UNITED STATES PATENT AND TRADEMARK OFFICE
P.O. BOX 1450
ALEXANDRIA, VA 22313-1450
www.uspto.gov

BOYLE FREDRICKSON S.C.
840 NORTH PLANKINTON AVENUE
MILWAUKEE, WI 53203

COPY MAILED
DEC 23 2008
OFFICE OF PETITIONS

In re Application of
Patrick Jeffery Condon et al
Application No. 29/253,956
Filed: February 15, 2006
Attorney Docket No. 1423.005

ON PETITION

This is a decision on the renewed petition filed October 31, 2008 under 37 CFR 1.137(b), to revive the above-identified application.

The petition is **GRANTED.**

Telephone inquiries concerning this decision should be directed to the undersigned at (571) 272-3210.

This matter is being referred to the Office of Data Management for further processing.

Irvin Dingle
Petitions Examiner
Office of Petitions

UNITED STATES PATENT AND TRADEMARK OFFICE

Commissioner for Patents
United States Patent and Trademark Office
P.O. Box 1450
Alexandria, VA 22313-1450
www.uspto.gov

BOYLE FREDRICKSON S.C.
840 NORTH PLANKINTON AVENUE
MILWAUKEE, WI 53203

COPY MAILED

JUL 1 8 2008

OFFICE OF PETITIONS

In re Application of	:	
Patrick Jeffrey CONDON, et al	:	
Application No. 29/253,957	:	ON PETITION
Filed: February 15, 2006	:	
Attorney Docket No. 1423.001	:	

This is a decision on the petition under the unintentional provisions of 37 CFR 1.137(b), filed May 15, 2008.

The petition is **DISMISSED**.

The application became abandoned for failure to submit corrected drawings in a timely manner in reply to the Notice of Allowability, mailed December 18, 2007, which set a period for reply of three (3) months. Accordingly, this application became abandoned on March 19, 2008.

A grantable petition under 37 CFR 1.137(b) must be accompanied by: (1) the required reply, unless previously filed; (2) the petition fee as set forth in 37 CFR 1.17(m); (3) a statement that the entire delay in filing the required reply from the due date for the reply until the filing of a grantable petition pursuant to 37 CFR 1.137(b) was unintentional; and (4) any terminal disclaimer (and fee as set forth in 37 CFR 1.20(d)) required by 37 CFR 1.137(d). Where there is a question as to whether either the abandonment or the delay in filing a petition under 37 CFR 1.137 was unintentional, the Director may require additional information. See MPEP 711.03(c)(II)(C) and (D). The instant petition lacks item(s) 4.

A terminal disclaimer and the $130 [$65 if small entity] terminal disclaimer fee is required under 37 CFR 1.137(d) if the application is: (1) a design application, (2) a utility application filed before June 8, 1995, or (3) a plant application filed before June 8, 1995. The terminal disclaimer must dedicate to the public a terminal part of the term of any patent granted on the application equivalent to the period of abandonment of the application, and must also apply to any patent granted on any application containing a specific reference under 35 U.S.C. 120, 121, or 365(c) to the application for which revival is sought.

Any request for reconsideration of this decision must be submitted within **TWO (2) MONTHS** from the mail date of this decision. Extensions of time under 37 CFR 1.136(a) are permitted. The reconsideration request should include a cover letter entitled "Renewed Petition under 37 CFR 1.137(b)." This is **not** a final agency action within the meaning of 5 U.S.C. § 704.

Further correspondence with respect to this matter should be addressed as follows:

By Mail: Mail Stop PETITION
Commissioner for Patents
P. O. Box 1450
Alexandria, VA 22313-1450

By hand: U. S. Patent and Trademark Office
Customer Service Window, Mail Stop Petitions
Randolph Building
401 Dulany Street
Alexandria, VA 22314

The centralized facsimile number is **(571) 273-8300.**

Telephone inquiries concerning this decision should be directed to Diane Goodwyn at (571) 272-6735.

Thurman Page
Petitions Examiner
Office of Petitions

UNITED STATES PATENT AND TRADEMARK OFFICE

Commissioner for Patents
United States Patent and Trademark Office
P.O. Box 1450
Alexandria, VA 22313-1450
www.uspto.gov

BOYLE FREDRICKSON S.C.
840 NORTH PLANKINTON AVENUE
MILWAUKEE, WI 53203

COPY MAILED
SEP 29 2008

In re Application of	:	
Patrick Jeffery CONDON, et al	:	
Application No. 29/253,957	:	DECISION ON PETITION
Filed: February 15, 2006	:	
Attorney Docket No. 1423.001	:	

This is a decision on the renewed petition under the unintentional provisions of 37 CFR 1.137(b), filed August 7, 2008, to revive the above-identified application.

The petition is **GRANTED**.

The application became abandoned for failure to timely pay the issue fee on or before March 18, 2008. As required by the Notice of Allowance and Fee(s) Due, mailed December 18, 2007, which set a statutory period for reply of three (3) months. Accordingly, the application became abandoned on March 19, 2008.

The petition satisfies the requirements of 37 CFR 1.137(b) in that petitioner has supplied (1) the reply in the form of payment of the Issue Fee of $410; (2) the petition fee of $770; (3) the required statement of unintentional delay; and (4) a Terminal Disclaimer.

The Terminal Disclaimer is accepted and has been made of record.

Telephone inquiries concerning this decision should be directed to Diane Goodwyn at (571) 272-6735.

This application is being referred to the Office of Data Management for processing.

Thurman Page
Petitions Examiner
Office of Petitions

RECEIVED
CENTRAL FAX CENTER
AUG 07 2008

PTO/SB/63 (08-08)
Approved for use through 08/31/2008. OMB 0651-0031
U.S. Patent and Trademark Office; U.S. DEPARTMENT OF COMMERCE
Under the Paperwork Reduction Act of 1995, no persons are required to a collection of information unless it displays a valid OMB control number.

TERMINAL DISCLAIMER TO ACCOMPANY PETITION	Docket Number (Optional) 1423.001

In re Application of:

Name: CONDON, et al.

Application Number: 29/253,957

Filed: February 15, 2006

For: LIGHT

The owner*, Dragonfish Technologies LLC of 100 percent interest in the above-identified application hereby disclaims a terminal part of the term of any patent granted the above-identified application equivalent to: (1) if the above-identified application is a design application, the period of abandonment of the above-identified application, and (2) if the above-identified application is a utility or plant application, the lesser of: (a) the period of abandonment of the application; or (b) the period extending beyond twenty years from the date on which the above-identified application was filed in the United States or, if the application contains a specific reference to an earlier filed application(s) under 35 U.S.C. 120, 121, or 365(c), from the date on which the earliest such application was filed. This disclaimer also applies to any patent granted on a utility or plant application filed before June 8, 1995, or a design application, that contains a specific reference under 35 U.S.C. 120, 121, or 365(c) to the above-identified application. This disclaimer is binding upon the grantee, and its successors or assigns.

Check either box 1 or 2 below, if appropriate.

1. ☐ For submissions on behalf of an organization (e.g., corporation, partnership, university, government agency, etc.), the undersigned is empowered to act on behalf of the organization.

2. ☑ The undersigned is an attorney or agent of record. Registration Number 32,401.

Signature — Date: 8/6/08

Adam L. Brookman — Typed or Printed Name

414-225-9755 — Telephone Number

☑ Terminal disclaimer fee under 37 CFR 1.20(d) included.

WARNING: Information on this form may become public. Credit card information should not be included on this form. Provide credit card information and authorization on PTO-2038.

* Statement under 37 CFR 3.73(b) is required if terminal disclaimer is signed by the assignee (owner). Form PTO/SB/96 may be used for making this certification. See MPEP § 324.

This collection of information is required by 37 CFR 1.137. The information is required to obtain or retain a benefit by the public which is to file (and by the USPTO to process) an application. Confidentiality is governed by 35 U.S.C. 122 and 37 CFR 1.11 and 1.14. This collection is estimated to take 12 minutes to complete, including gathering, preparing, and submitting the completed application form to the USPTO. Time will vary depending upon the individual case. Any comments on the amount of time you require to complete this form and/or suggestions for reducing this burden, should be sent to the Chief Information Officer, U.S. Patent and Trademark Office, U.S. Department of Commerce, P.O. Box 1450, Alexandria, VA 22313-1450. DO NOT SEND FEES OR COMPLETED FORMS TO THIS ADDRESS. SEND TO: Commissioner for Patents, P.O. Box 1450, Alexandria, VA 22313-1450.

If you need assistance in completing the form, call 1-800-PTO-9199 and select option 2.

08/07/2008 HMARZI1 00000038 501170 29253957
01 FC:2814 65.00 DA

RAM Fee History Query

Revenue Accounting and Management

Name/Number: 29253957 Total Records Found: 8

Start Date: Any Date End Date: Any Date

Accounting Date	Sequence Num.	Fee Type	Fee Code	Fee Amount	Mailroom Date	Payment Method
08/07/2008	00000045	1	2814	$65.00	08/07/2008	DA 501170
05/16/2008	00005818	4	2453	$770.00	05/15/2008	DA 501170
03/18/2008	00000124	1	2502	$410.00	03/18/2008	DA 501170
05/18/2006	00000010	4	8021	$40.00	05/17/2006	DA 501170
05/11/2006	00000099	1	2051	$65.00	05/11/2006	CK
02/17/2006	00000156	1	2012	$100.00	02/15/2006	CK
02/17/2006	00000157	1	2112	$50.00	02/15/2006	CK
02/17/2006	00000158	1	2312	$65.00	02/15/2006	CK

RECEIVED
CENTRAL FAX CENTER
AUG 07 2008

PTO/SB/64 (08-08)
Approved for use through 08/31/2008. OMB 0651-0031
U.S. Patent and Trademark Office; U.S. DEPARTMENT OF COMMERCE
Under the Paperwork Reduction Act of 1995, no persons are required to respond to a collection of information unless it displays a valid OMB control number.

PETITION FOR REVIVAL OF AN APPLICATION FOR PATENT ABANDONED UNINTENTIONALLY UNDER 37 CFR 1.137(b)

Docket Number (Optional) 1423.001

First named inventor: CONDON

Application No.: 29/253,957 Art Unit: 2911

Filed: February 15, 2006 Examiner: HEFLIN

Title: LIGHT

Attention: Office of Petitions
Mail Stop Petition
Commissioner for Patents
P.O. Box 1450
Alexandria, VA 22313-1450
FAX (571) 273-8300

NOTE: If information or assistance is needed in completing this form, please contact Petitions Information at (571) 272-3282.

The above-identified application became abandoned for failure to file a timely and proper reply to a notice or action by the United States Patent and Trademark Office. The date of abandonment is the day after the expiration date of the period set for reply in the office notice or action plus an extensions of time actually obtained.

APPLICANT HEREBY PETITIONS FOR REVIVAL OF THIS APPLICATION

NOTE: A grantable petition requires the following items:
(1) Petition fee;
(2) Reply and/or issue fee;
(3) Terminal disclaimer with disclaimer fee - required for all utility and plant applications filed before June 8, 1995; and for all design applications; and
(4) Statement that the entire delay was unintentional.

1. Petition fee
☑ Small entity-fee $ _____ (37 CFR 1.17(m)). Applicant claims small entity status. See 37 CFR 1.27.

☐ Other than small entity – fee $ _____ (37 CFR 1.17(m))

2. Reply and/or fee
A. The reply and/or fee to the above-noted Office action in the form of substitute drawings (identify type of reply):

☐ has been filed previously on _____.
☑ is enclosed herewith.

B. The issue fee and publication fee (if applicable) of $ 410.00.
☑ has been paid previously on December 27, 2007.
☐ is enclosed herewith.

This collection of information is required by 37 CFR 1.137(b). The information is required to obtain or retain a benefit by the public which is to file (and by the USPTO to process) an application. Confidentiality is governed by 35 U.S.C. 122 and 37 CFR 1.11 and 1.14. This collection is estimated to take 1.0 hour to complete, including gathering, preparing, and submitting the completed application form to the USPTO. Time will vary depending upon the individual case. Any comments on the amount of time you require to complete this form and/or suggestions for reducing this burden, should be sent to the Chief Information Officer, U.S. Patent and Trademark Office, U.S. Department of Commerce, P.O. Box 1450, Alexandria, VA 22313-1450. DO NOT SEND FEES OR COMPLETED FORMS TO THIS ADDRESS. SEND TO: Mail Stop Petition, Commissioner for Patents, P.O. Box 1450, Alexandria, VA 22313-1450.

If you need assistance in completing the form, call 1-800-PTO-9199 and select option 2.

RECEIVED
CENTRAL FAX CENTER
AUG 07 2008

PTO/SB/64 (08-08)
Approved for use through 08/31/2008. OMB 0651-0031
U.S. Patent and Trademark Office; U.S. DEPARTMENT OF COMMERCE
Under the Paperwork Reduction Act of 1995, no persons are required to respond to a collection of information unless it displays a valid OMB control number.

3. Terminal disclaimer with disclaimer fee

☐ Since this utility/plant application was filed on or after June 8, 1995, no terminal disclaimer is required.

☑ A terminal disclaimer (and disclaimer fee (37 CFR 1.20(d)) of $ 65 for a small entity or $ _____ for other than a small entity) disclaiming the required period of time is enclosed herewith (see PTO/SB/63).

4. STATEMENT: The entire delay in filing the required reply from the due date for the required reply until the filing of a grantable petition under 37 CFR 1.137(b) was unintentional. [NOTE: The United States Patent and Trademark Office may require additional information if there is a question as to whether either the abandonment or the delay in filing a petition under 37 CFR 1.137(b) was unintentional (MPEP 711.03(c), subsections (III)(C) and (D)).]

WARNING:

Petitioner/applicant is cautioned to avoid submitting personal information in documents filed in a patent application that may contribute to identity theft. Personal information such as social security numbers, bank account numbers, or credit card numbers (other than a check or credit card authorization form PTO-2038 submitted for payment purposes) is never required by the USPTO to support a petition or an application. If this type of personal information is included in documents submitted to the USPTO, petitioners/applicants should consider redacting such personal information from the documents before submitting them to the USPTO. Petitioner/applicant is advised that the record of a patent application is available to the public after publication of the application (unless a non-publication request in compliance with 37 CFR 1.213(a) is made in the application) or issuance of a patent. Furthermore, the record from an abandoned application may also be available to the public if the application is referenced in a published application or an issued patent (see 37 CFR 1.14). Checks and credit card authorization forms PTO-2038 submitted for payment purposes are not retained in the application file and therefore are not publicly available.

Signature	8/7/08 Date
J. Mark Wilkinson Typed or printed name	48,865 Registration Number, if applicable
840 N. Plankinton Ave. Address	414-225-9755 Telephone Number
Milwaukee, WI 53203 Address	

Enclosures:
- ☑ Fee Payment
- ☑ Reply
- ☑ Terminal Disclaimer Form
- ☐ Additional sheets containing statements establishing unintentional delay
- ☐ Other: _____

CERTIFICATE OF MAILING OR TRANSMISSION [37 CFR 1.8(a)]

I hereby certify that this correspondence is being:

☐ Deposited with the United States Postal Service on the date shown below with sufficient postage as first class mail in an envelope addressed to: Mail Stop Petition, Commissioner for Patents, P. O. Box 1450, Alexandria, VA 22313-1450.

☒ Transmitted by facsimile on the date shown below to the United States Patent and Trademark Office at (571) 273-8300.

8/7/08 Date	Linda Brente Signature
	Linda Brente Typed or printed name of person signing certificate

PAGE 7/9 * RCVD AT 8/7/2008 1:51:33 PM [Eastern Daylight Time] * SVR:USPTO-EFXRF-6/28 * DNIS:2738300 * CSID: * DURATION (mm-ss):03-08

RECEIVED
CENTRAL FAX CENTER

MAR 0 9 2006

PTO/SB/27 (09-04)
Approved for use through 07/31/2006. OMB 0651-0031
U.S. Patent and Trademark Office; U.S DEPARTMENT OF COMMERCE

Under the Paperwork Reduction ACT of 1995, no persons are required to respond to collection of information unless it displays a valid OMB control number.

REQUEST FOR EXPEDITED EXAMINATION OF A DESIGN APPLICATION (37 CFR 1.155)

Application Number	29/254092
Filing Date	February 17, 2006
First Named Inventor	BERNETT, Jeffrey
Title	RECLINING CHAIR
Atty Docket Number	DWR-10001

ADDRESS TO:

COMMISSIONER FOR PATENTS

P.O. Box 1450
Alexandria, VA 22313-1450

Approved
4-11-06 Jacqueline M. Stone
Jacqueline M. Stone, Director
Technology Center 1700

This is a request for expedited examination of a design application under 37 CFR 1.155.

NOTE: If the Request made by this form accompanies original application papers, include form PTO/SB/18 "Design Patent Application Transmittal" or its equivalent.

A preexamination search was conducted. The field of search was: D06/334, 356, 360; 297/216.1, 216.19, 216.2 216.2, 216.15, 354.12, 361.1, 83-85; 244/122R, 118.5, 118.6

Related applications: _____

If not previously filed for the above-identified application, the following items required by 37 CFR 1.155 are enclosed:

- Formal drawings (see 37 CFR 1.84).
- The fee set forth in 37 CFR 1.17(k).
- An information disclosure statement in compliance with 37 CFR 1.98.

/Joyce Tom, Reg. No. 48,681/	March 9, 2006
Signature	Date
JOYCE TOM	48,681
Typed or printed name	Registration Number, if applicable
(415) 738-6356	
Telephone Number	

WARNING: Information on this form may become public. Credit card information should not be included on this form. Provide credit card information and authorization on PTO-2038.

This collection of information is required by 37 CFR 1.155. The information is required to obtain or retain a benefit by the public which is to file (and by the USPTO to process) an application. Confidentiality is governed by 35 U.S.C. 122 and 37 CFR 1.11 and 1.14. This collection is estimated to take 8 minutes to complete, including gathering, preparing, and submitting the completed application form to the USPTO. Time will vary depending upon the individual case. Any comments on the amount of time you require to complete this form and/or suggestions for reducing this burden, should be sent to the Chief Information Officer, U.S. Patent and Trademark Office, U.S. Department of Commerce, P.O. Box 1450, Alexandria, VA 22313-1450. DO NOT SEND FEES OR COMPLETED FORMS TO THIS ADDRESS. SEND TO: Commissioner for Patents, P.O. Box 1450, Alexandria, VA 22313-1450.

If you need assistance in completing the form, call 1-800-PTO-9199 and select option 2.

BEST AVAILABLE COPY

03/13/2006 WBRELTI 00000071 29254092
01 FC:1806 300.00 OP

SPE RESPONSE FOR CERTIFICATE OF CORRECTION

Paper No.: _____

DATE : 4-20-09

TO SPE OF : ART UNIT 2913

SUBJECT : Request for Certificate of Correction for Appl. No.: 29/254093 Patent No.: D530259-S

Please respond to this request for a certificate of correction within 7 days.

FOR IFW FILES:

Please review the requested changes/corrections as shown in the **COCIN** document(s) in the IFW application image. No new matter should be introduced, nor should the scope or meaning of the claims be changed.

Please complete the response (see below) and forward the completed response to scanning using document code **COCX**.

FOR PAPER FILES:

Please review the requested changes/corrections as shown in the attached certificate of correction. Please complete this form (see below) and forward it with the file to:

Certificates of Correction Branch (CofC)
South Tower - 9A22
Palm Location 7580

Attn: G. Rabmaker

E. Ramos
Certificates of Correction Branch
703-308-9390 ext. _____

Should these drawings be the correct drawings

Thank You For Your Assistance

The request for issuing the above-identified correction(s) is hereby:
Note your decision on the appropriate box.

- ☒ **Approved** — All changes apply.
- ☐ **Approved in Part** — Specify below which changes do not apply.
- ☐ **Denied** — State the reasons for denial below.

Comments: _____

Caron D Veynar
CARON D. VEYNAR
SUPERVISORY PATENT EXAMINER
SPE

2913
Art Unit

UNITED STATES PATENT AND TRADEMARK OFFICE

Commissioner for Patents
United States Patent and Trademark Office
P.O. Box 1450
Alexandria, VA 22313-1450
www.uspto.gov

BIRCH STEWART KOLASCH & BIRCH
P O BOX 747
FALLS CHURCH, VA 22040-0747

COPY MAILED

JAN 12 2007

OFFICE OF PETITIONS

ON PETITION

In re Application of	:
Emilene Gicos De Andrade	:
Application No. 29/254,095	:
Filed: February 17, 2006	:
Attorney Docket No. 0315-0168PUS1	:

This is in response to the petition under 37 CFR 1.47(b), filed June 9, 2006.

The petition is **GRANTED.**

A grantable petition under 37 CFR 1.47(b) requires:

(1) proof that the non-signing inventor cannot be reached after diligent effort or refuses to sign the oath or declaration after having been presented with the application papers (specification, claims and drawings);
(2) an acceptable oath or declaration in compliance with 35 U.S.C. §§ 115 and 116;
(3) the petition fee of $200;
(4) a statement of the last known address of the non-signing inventor;
(5) proof of proprietary interest: and
(6) proof of irreparable damage.

The petition complies with the above requirements. Accordingly, the application and papers have been found to be in compliance with 37 CFR 1.47(b). This application is hereby accorded Rule 1.47(b) status.

As provided in 37 CFR 1.47(c), this Office will forward notice of this application's filing to the non-signing inventor at the address given in the petition. Notice of the filing of this application will also be published in the Official Gazette.

This application is being referred to the Office of Initial Patent Examination for pre-examination processing.

Telephone inquiries regarding this decision should be directed to the undersigned at (571) 272-3218.

Frances Hicks
Petitions Examiner
Office of Petitions

UNITED STATES PATENT AND TRADEMARK OFFICE

Commissioner for Patents
United States Patent and Trademark Office
P.O. Box 1450
Alexandria, VA 22313-1450
www.uspto.gov

COPY MAILED

JUL 18 2007

OFFICE OF PETITIONS

HEDMAN & COSTIGAN P.C.
1185 AVENUE OF THE AMERICAS
NEW YORK, NY 10036

In re Patent No. D535,098	:	
Issued: January 16, 2007	:	
Application No. 29/254,123	:	NOTICE
Filed: February 17, 2006	:	
Patentee: Thomas Maier	:	

This is a notice regarding your request for acceptance of a fee deficiency submission under 37 CFR 1.28. On September 1, 1998, the Court of Appeals for the Federal Circuit held that 37 CFR 1.28(c) is the sole provision governing the time for correction of the erroneous payment of the issue fee as a small entity. **See DH Technology v. Synergystex International, Inc. 154 F.3d 1333, 47 USPQ2d 1865 (Fed. Cir. Sept. 1, 1998).**

The Office no longer investigates or rejects original or reissue applications under 37 CFR 1.56. **1098 Off. Gaz. Pat. Office 502 (January 3, 1989)**. Therefore, nothing in this Notice is intended to imply that an investigation was done.

Your fee deficiency submission under 37 CFR 1.28 is hereby **ACCEPTED**.

This application no longer qualifies for small entity status. Accordingly, all future fees must be paid at the large entity rate.

Sherry D. Brinkley
Petitions Examiner
Office of Petitions

OIPE IAP5
AUG 1 1 2008
PATENT & TRADEMARK OFFICE

IN THE UNITED STATES PATENT OFFICE

IN RE APPLICATION:

Title:	BRUSH HANDLE		
Applicant:	G. Waksman, et al. D575006	Group:	2911
Serial No.:	29/254,130	Examiner:	Lavone Tabor
Filed:	January 17, 2006	File No:	2005-0159

PETITION FOR ISSUANCE OF AN APPLICATION IN THE NAME OF THE ASSIGNEE UNDER 37 CFR 3.81(b)

MAIL STOP PETITIONS
Commissioner for Patents
PO Box 1450
Alexandria, Virginia 22313-1450

Sir:

Applicant requests for issuance of the above subject application in the name of the assignee.

1. Applicant filed concurrently an executed assignment, patent recordation form PTO-1595 and the above subject application on the above filing date.

2. Applicant received a Notice of Recordation of Assignment Document from the U.S. Patent Office having a mailing date of May 8, 2006, a recordation date of 2/17/2006 and having reel/frame no.: 017584/0965 for above subject application.

08/12/2008 TLUU11 00000025 D575006
01 FC:1811 100.00 OP

3. Applicant submitted the assignment for recordation as set forth in 37 CFR 3.11 before the above subject application issued.

08/12/2008 TLUU11 00000024 29254130
01 FC:1464 130.00 OP

4. Applicant transmitted a design issue fee including form PTOL-85 for the above subject application on June 26, 2008.

5. Applicant unintentionally omitted assignee's name "Corona Brushes, Inc." in item 3A, assignee's residence "Tampa, Florida" in item 3B and assignee category "corporation" in form PTOL-85B for the above subject application.

6. Applicant respectfully requests issuance of the above subject application in the name of the assignee, namely "Corona Brushes, Inc." in item 3A and assignee's residence "Tampa, Florida" in item 3B of form PTOL-85B.

7. Applicant respectfully requests for a certification of correction under 37 CFR 1.323 arising from a missing assignee's name in item 3 of PTOL-85, namely "Corona Brushes, Inc." in item 3A and assignee's residence "Tampa, Florida" in item 3B of form PTOL-85B.

8. Applicant encloses herewith a request for a certificate of correction form PTO/SB/44 under 37 CFR 1.323.

9. Applicant encloses herewith the fee of ($100) as set forth in 37 CFR 1.20(a).

10. Applicant encloses herewith the processing fee of ($130) as set forth in 37 CFR 1.17.

11. Payment of the Petition fee:

(a) [ ] A check in the above TOTAL FEE is enclosed.

(b) [X] Please charge all fees in accordance with the enclosed Credit Card Payment Form of the United States Patent and Trademark Office.

(c) [ ] Please charge the above filing fee to Account No. 06-2120.

12. X The Commissioner is hereby authorized to charge any additional or credit any over payment to Deposit Account No. 06-2120.

Respectfully submitted,

FRIJOUF, RUST & PYLE, P.A.

David A. Frijouf, Reg. No. 50,422
201 East Davis Blvd Boulevard
Tampa, Florida 33606
813.254.5100 phone
813.254.5400 facsimile
frijouf@frijouf.com email
Attorneys for Applicant

Deposit Account

Please charge our account any deficiency in fees or credit any over payment arising out of this correspondence to Deposit Account No. 06-2120.

Certificate of Mailing

It is hereby certified that the foregoing correspondence and fee is being placed in an envelope addressed to: Commissioner for Patents, PO Box 1450, Alexandria, Virginia 22313-1450 and mailed by first class mail, postage prepaid, this 8th day of August, 2008.

PTO/SB/44 (09-07)
Approved for use through 08/31/2010. OMB 0651-0033
U.S. Patent and Trademark Office; U.S. DEPARTMENT OF COMMERCE
Under the Paperwork Reduction Act of 1995, no persons are required to respond to a collection of information unless it displays a valid OMB control number.
(Also Form PTO-1050)

UNITED STATES PATENT AND TRADEMARK OFFICE
CERTIFICATE OF CORRECTION

PATENT NO. D:575066

APPLICATION NO.: 29/254,130

ISSUE DATE :

INVENTOR(S) : G. Waksman, et al.

It is certified that an error appears or errors appear in the above-identified patent and that said Letters Patent is hereby corrected as shown below:

On the title page, line 73 insert the following:

-Assignee: Corona Brushes, Inc.
Tampa, Florida-

MAILING ADDRESS OF SENDER (Please do not use customer number below):

Frijouf, Rust & Pyle, P.A.
201 East Davis Blvd
Tampa, Florida 33606

This collection of information is required by 37 CFR 1.322, 1.323, and 1.324. The information is required to obtain or retain a benefit by the public which is to file (and by the USPTO to process) an application. Confidentiality is governed by 35 U.S.C. 122 and 37 CFR 1.14. This collection is estimated to take 1.0 hour to complete, including gathering, preparing, and submitting the completed application form to the USPTO. Time will vary depending upon the individual case. Any comments on the amount of time you require to complete this form and/or suggestions for reducing this burden, should be sent to the Chief Information Officer, U.S. Patent and Trademark Office, U.S. Department of Commerce, P.O. Box 1450, Alexandria, VA 22313-1450. DO NOT SEND FEES OR COMPLETED FORMS TO THIS ADDRESS. SEND TO: **Attention Certificate of Corrections Branch, Commissioner for Patents, P.O. Box 1450, Alexandria, VA 22313-1450.**

If you need assistance in completing the form, call 1-800-PTO-9199 and select option 2.

PTO/SB/27 (05-03)
Approved for use through 04/30/2003. OMB 0651-0031
U.S. Patent and Trademark Office; U.S. DEPARTMENT OF COMMERCE
Under the Paperwork Reduction Act of 1995, no persons are required to respond to a collection of information unless it displays a valid OMB control number.

REQUEST FOR EXPEDITED EXAMINATION OF A DESIGN APPLICATION (37 CFR 1.155)

Application Number	TO BE ASSIGNED
Filing Date	February 21, 2006
First Named Inventor	David Roulo
Title	Portion Of A Shoe Upper
Atty Docket Number	015127.00684

02/22/2006 U.S. PTO
29/254203
022106

HAND DELIVER TO THE DESIGN GROUP DIRECTOR'S OFFICE
-or- ADDRESS TO:
MAIL STOP EXPEDITED DESIGN
COMMISSIONER FOR PATENTS
P.O. Box 1450
Alexandria, VA 22313-1450

This is a request for expedited examination of a design application under 37 CFR 1.155.

NOTE: If the Request made by this form accompanies original application papers, include form PTO/SB/18 "Design Patent Application Transmittal" or its equivalent.

A preexamination search was conducted. The field of search was:

Class D2/896, 902, 907, 908, 943, 944, 945, 946, 969, 972, 973 and 974

Related applications: _____

If not previously filed for the above-identified application, the following items required by 37 CFR 1.155 are enclosed:

Formal drawings (see 37 CFR 1.84).

The fee set forth in 37 CFR 1.17(k).

An information disclosure statement in compliance with 37 CFR 1.98.

4-6-06
Approved
Jacqueline M. Stone
Jacqueline M. Stone, Director
Technology Center 1700

February 21, 2006
Date

David R Gerk
Signature

202-824-3000
Telephone Number

David R. Gerk-Registration No. 56,901
Typed or printed name

WARNING: Information on this form may become public. Credit card information should not be included on this form. Provide credit card information and authorization on PTO-2038.

This collection of information is required by 37 CFR 1.155. The information is required to obtain or retain a benefit by the public which is to file (and by the USPTO to process) an application. Confidentiality is governed by 35 U.S.C. 122 and 37 CFR 1.14. This collection is estimated to take 6 minutes to complete, including gathering, preparing, and submitting the completed application form to the USPTO. Time will vary depending upon the individual case. Any comments on the amount of time you require to complete this form and/or suggestions for reducing this burden, should be sent to the Chief Information Officer, U.S. Patent and Trademark Office, U.S. Department of Commerce, P.O. Box 1450, Alexandria, VA 22313-1450. DO NOT SEND FEES OR COMPLETED FORMS TO THIS ADDRESS. SEND TO: Mail Stop Expedited Design, Commissioner for Patents, P.O. Box 1450, Alexandria, VA 22313-1450.

If you need assistance in completing the form, call 1-800-PTO-9199 and select option 2.

02/22/2006 LWONDIM1 00000035 190733 29254203
04 FC:1802 900.00 DA

PTO/SB/27 (05-03)
Approved for use through 04/30/2003. OMB 0651-0031
U.S. Patent and Trademark Office; U.S. DEPARTMENT OF COMMERCE
Under the Paperwork Reduction Act of 1995, no persons are required to respond to a collection of information unless it displays a valid OMB control number.

REQUEST FOR EXPEDITED EXAMINATION OF A DESIGN APPLICATION (37 CFR 1.155)

Application Number	TO BE ASSIGNED
Filing Date	February 21, 2006
First Named Inventor	Michael Joseph DiTullo, Jr.
Title	Portion Of A Shoe Upper
Atty Docket Number	015127.00690

113006 U.S. PTO
29/254204
022106

HAND DELIVER TO THE DESIGN GROUP DIRECTOR'S OFFICE
-or- ADDRESS TO:
MAIL STOP EXPEDITED DESIGN
COMMISSIONER FOR PATENTS
P.O. Box 1450
Alexandria, VA 22313-1450

This is a request for expedited examination of a design application under 37 CFR 1.155.

NOTE: If the Request made by this form accompanies original application papers, include form PTO/SB/18 "Design Patent Application Transmittal" or its equivalent.

A preexamination search was conducted. The field of search was:

Class D2/896, 902, 907, 908, 943, 944, 945, 946, 969, 972, 973 and 974

Related applications: _____

If not previously filed for the above-identified application, the following items required by 37 CFR 1.155 are enclosed:

Formal drawings (see 37 CFR 1.84).

The fee set forth in 37 CFR 1.17(k).

An information disclosure statement in compliance with 37 CFR 1.98.

4-6-06
Approved
Jacqueline M. Stone
Jacqueline M. Stone, Director
Technology Center 1700

February 21, 2006
Date

Signature

202-824-3000
Telephone Number

David R. Gerk-Registration No. 56,901
Typed or printed name

WARNING: Information on this form may become public. Credit card information should not be included on this form. Provide credit card information and authorization on PTO-2038.

This collection of information is required by 37 CFR 1.155. The information is required to obtain or retain a benefit by the public which is to file (and by the USPTO to process) an application. Confidentiality is governed by 35 U.S.C. 122 and 37 CFR 1.14. This collection is estimated to take 6 minutes to complete, including gathering, preparing, and submitting the completed application form to the USPTO. Time will vary depending upon the individual case. Any comments on the amount of time you require to complete this form and/or suggestions for reducing this burden, should be sent to the Chief Information Officer, U.S. Patent and Trademark Office, U.S. Department of Commerce, P.O. Box 1450, Alexandria, VA 22313-1450. DO NOT SEND FEES OR COMPLETED FORMS TO THIS ADDRESS. SEND TO: Mail Stop Expedited Design, Commissioner for Patents, P.O. Box 1450, Alexandria, VA 22313-1450.

If you need assistance in completing the form, call 1-800-PTO-9199 and select option 2.

02/22/2006 LWONDIM1 00000036 190733 29254204
04 FC:1602 900.00 DA

PTO/SB/27 (05-03)
Approved for use through 04/30/2003. OMB 0651-0031
U.S. Patent and Trademark Office; U.S. DEPARTMENT OF COMMERCE
Under the Paperwork Reduction Act of 1995, no persons are required to respond to a collection of information unless it displays a valid OMB control number.

REQUEST FOR EXPEDITED EXAMINATION OF A DESIGN APPLICATION (37 CFR 1.155)

Application Number	TO BE ASSIGNED
Filing Date	February 22, 2006
First Named Inventor	Jason Petrie
Title	Portion Of A Shoe Upper
Atty Docket Number	015127.00692

1/3006 U.S. PTO
29254247
022206

HAND DELIVER TO THE DESIGN GROUP DIRECTOR'S OFFICE
-or- ADDRESS TO:
MAIL STOP EXPEDITED DESIGN
COMMISSIONER FOR PATENTS
P.O. Box 1450
Alexandria, VA 22313-1450

This is a request for expedited examination of a design application under 37 CFR 1.155.

NOTE: If the Request made by this form accompanies original application papers, include form PTO/SB/18 "Design Patent Application Transmittal" or its equivalent.

A preexamination search was conducted. The field of search was:

Class D2/896, 902, 907, 908, 943, 944, 945, 946, 969, 972, 973 and 974

Approved 4-6-06
Jacqueline M. Stone
Jacqueline M. Stone, Director
Technology Center 1700

Related applications: _____

If not previously filed for the above-identified application, the following items required by 37 CFR 1.155 are enclosed:

02/23/2006 AKELECH1 00000071 29254247

Formal drawings (see 37 CFR 1.84)
The fee set forth in 37 CFR 1.17(k)
An information disclosure statement in compliance with 37 CFR 1.98.

~~01 FC:1012 200.00 DA~~
~~02 FC:1112 100.00 DA~~
~~03 FC:1312 130.00 DA~~
04 FC:1802 900.00 DA

February 22, 2006
Date

Signature

202-824-3000
Telephone Number

David R. Gerk-Registration No. 56,901
Typed or printed name

WARNING: Information on this form may become public. Credit card information should not be included on this form. Provide credit card information and authorization on PTO-2038.

This collection of information is required by 37 CFR 1.155. The information is required to obtain or retain a benefit by the public which is to file (and by the USPTO to process) an application. Confidentiality is governed by 35 U.S.C. 122 and 37 CFR 1.14. This collection is estimated to take 6 minutes to complete, including gathering, preparing, and submitting the completed application form to the USPTO. Time will vary depending upon the individual case. Any comments on the amount of time you require to complete this form and/or suggestions for reducing this burden, should be sent to the Chief Information Officer, U.S. Patent and Trademark Office, U.S. Department of Commerce, P.O. Box 1450, Alexandria, VA 22313-1450. DO NOT SEND FEES OR COMPLETED FORMS TO THIS ADDRESS. SEND TO: Mail Stop Expedited Design, Commissioner for Patents, P.O. Box 1450, Alexandria, VA 22313-1450.

If you need assistance in completing the form, call 1-800-PTO-9199 and select option 2.

02/23/2006 AKELECH1 00000071 29254247
01 FC:1012 200.00 DA

UNITED STATES PATENT AND TRADEMARK OFFICE

COMMISSIONER FOR PATENTS
UNITED STATES PATENT AND TRADEMARK OFFICE
P.O. BOX 1450
ALEXANDRIA, VA 22313-1450
www.uspto.gov

MOTOROLA, INC.
1303 EAST ALGONQUIN ROAD
IL01/3RD
SCHAUMBURG, IL 60196

COPY MAILED

MAY 27 2008

OFFICE OF PETITIONS

In re Application of	:	
Peng Chung Tan et al	:	
Application No. 29/254,250	:	ON PETITION
Filed: February 21, 2006	:	
Attorney Docket No. CM09640XM	:	

This is a decision on the petition filed January 18, 2008 under 37 CFR 1.137(b), to revive the above-identified application.

The petition is **GRANTED.**

The above-identified application became abandoned for failure to submit the formal drawings in a timely manner in reply to the Notice of Allowance mailed July 30, 2007, which set a statutory period for reply of three (3) months. Accordingly, the above-identified application became abandoned on October 31, 2007.

The petition satisfies the conditions for revival pursuant to the provisions of 37 CFR 1.137(b) in that (1) the reply in the form of formal drawings; (2) the petition fee; and (3) the required statement of unintentional delay have been received (4) Terminal Disclaimer. Accordingly, the formal drawings are accepted as having been unintentionally delayed.

Telephone inquiries concerning this decision should be directed to the undersigned at (571) 272-3210.

This matter is being referred to the Office of Data Management for further processing.

Irvin Dingle
Petitions Examiner
Office of Petitions

UNITED STATES PATENT AND TRADEMARK OFFICE

Commissioner for Patents
United States Patent and Trademark Office
P.O. Box 1450
Alexandria, VA 22313-1450
www.uspto.gov

THOMAS, KAYDEN, HORSTEMEYER & RISLEY, LLP
100 GALLERIA PARKWAY, NW, Suite 1750
ATLANTA GA 30339-5948

COPY MAILED
OCT 23 2006
OFFICE OF PETITIONS

In re Application of :
CORBIN :
Application No. 29/254,302 : DECISION ON PETITION
Filed: February 21, 2006 : UNDER 37 CFR 1.313(c)
Attorney Docket No. 12238-1010 :

This is a decision on the petition under 37 CFR 1.313(c), filed October 16, 2006, to withdraw the above-identified application from issue after payment of the issue fee.

The petition is **DISMISSED**.

The petition to withdraw from issue is accompanied by a request for continued examination (RCE) under 37 CFR 1.114. However, the filing of an RCE is improper in a design application. In this regard, petitioner's attention is directed to 37 CFR 1.114(e), which states that the provisions of this section do not apply if the application is:

(1) A provisional application;
(2) An application for a utility or plant patent filed under 35 U.S.C. 111(a) before June 8, 1995;
(3) An international application filed under 35 U.S.C. 363 before June 8, 1995;
(4) An application for a design patent; or
(5) A patent under reexamination.

37 CFR 1.313(c) provides that:

Once the issue fee has been paid, the application will not be withdrawn from issue upon petition by the applicant for any reason except:
(1) Unpatentability of one of more claims, which petition must be accompanied by an unequivocal statement that one or more claims are unpatentable, an amendment to such claim or claims, and an explanation as to how the amendment causes such claim or claims to be patentable;
(2) Consideration of a request for continued examination in compliance with 37 CFR 1.114; or
(3) Express abandonment of the application. Such express abandonment may be in favor of a continuing application.
Accordingly, the petition must be dismissed as failing to comply with the provisions of 37 CFR 1.313(c)(3).

Petitioner's attention is directed to 37 CFR 1.53(d), which states:

(1) A continuation or divisional application (but not a continuation-in-part) of a prior nonprovisional application may be filed as a continued prosecution application under this paragraph, provided that:

(i) The application is for a design patent;

(ii) The prior nonprovisional application is a design application that is complete as defined by § 1.51(b); and

(iii) The application under this paragraph is filed before the earliest of:

(A) Payment of the issue fee on the prior application, unless a petition under § 1.313 is granted in the prior application;

(B) Abandonment of the prior application; or

(C) Termination of proceedings on the prior application.

Accordingly, the appropriate avenue of relief for a grantable petition to withdraw this design application from issue would be to file either a continued prosecution application (CPA) under 37 CFR 1.53(d) or a continuing application under 37 CFR 1.53(b). Any request for reconsideration should be entitled "Renewed Petition under 37 CFR 1.313(c)(3) and be accompanied by a request for a CPA under 37 CFR 1.53(d) or a statement of express abandonment in favor of a concurrently filed continuing application under 37 CFR 1.53(d).

Petitioner is reminded that the renewed petition to withdraw from issue may not be recognized or effective if not received by the appropriate deciding official in time to act prior to issuance. *Note* 37 CFR 1.313(d). It is recommended that the facsimile number listed below be used to file the appropriate documents (*i.e.,* the renewed petition and CPA request) for withdrawing this application from issue.

Further correspondence with respect to this matter should be addressed as follows:

By mail: Mail Stop PETITIONS
Commissioner for Patents
Post Office Box 1450
Alexandria, VA 22313-1450

By hand: Customer Service Window
Mail Stop Petitions
Randolph Building
401 Dulany Street
Alexandria, VA 22314

By fax: **(571) 273-0025**
Office of Petitions

Any questions concerning this matter may be directed to Monica A. Graves at (571) 272-7253.

Karen Creasy for

Frances Hicks
Petitions Examiner
Office of Petitions

UNITED STATES PATENT AND TRADEMARK OFFICE

Commissioner for Patents
United States Patent and Trademark Office
P.O. Box 1450
Alexandria, VA 22313-1450
www.uspto.gov

THOMAS, KAYDEN, HORSTEMEYER & RISLEY LLP
100 GALLERIA PARKWAY NW, SUITE 1750
ATLANTA, GA 30339-5948

COPY MAILED

JAN 25 2007

OFFICE OF PETITIONS

In re Application of	:	
O. Bradley Corbin	:	DECISION GRANTING PETITION
Application No. 29/254,302	:	UNDER 37 CFR 1.313(c)(3) (CPA)
Filed: February 21, 2006	:	
Attorney Docket No. 12238-1010	:	

This is in response to the communication filed November 2, 2006, which is being treated as a renewed petition under 37 CFR 1.313(c)(3) to withdraw the above-identified application from issue after payment of the issue fee.

The petition is **GRANTED**.

The petition filed on October 16, 2006 was dismissed because it was accompanied by an improper Request for Continued Examination under 37 CFR 1.114 instead of the filing of a Request for Continued Prosecution (CPA) under 37 CFR 1.53(d). The present communication is accompanied by a CPA. Accordingly, the above-identified application is hereby withdrawn from issue in favor of a continued prosecution application (CPA) under 37 CFR 1.53(d).

Petitioner is advised that the issue fee paid on September 21, 2006 in the parent application is not refundable nor can it be applied towards any new Notice of Allowance which may issue on the CPA filed November 2, 2006.

Telephone inquiries should be directed to the undersigned at (571) 272-3218.

This matter is being referred to Technology Center AU 2912 for processing of the CPA and consideration of the Information Disclosure Statement.

Frances Hicks
Petitions Examiner
Office of Petitions

PTO/SB/27 (05-03)
Approved for use through 04/30/2003. OMB 0651-0031
U.S. Patent and Trademark Office; U.S. DEPARTMENT OF COMMERCE
Under the Paperwork Reduction Act of 1995, no persons are required to respond to a collection of information unless it displays a valid OMB control number.

REQUEST FOR EXPEDITED EXAMINATION OF A DESIGN APPLICATION (37 CFR 1.155)

Application Number	TBD
Filing Date	Herewith
First Named Inventor	Shane KOHASTU
Title	Portion Of A Shoe Outsole
Atty Docket Number	015127.00689

113006 U.S. PTO
29/254313
022306

HAND DELIVER TO THE DESIGN GROUP DIRECTOR'S OFFICE
-or- ADDRESS TO:
MAIL STOP EXPEDITED DESIGN
COMMISSIONER FOR PATENTS
P.O. Box 1450
Alexandria, VA 22313-1450

This is a request for expedited examination of a design application under 37 CFR 1.155.

NOTE: If the Request made by this form accompanies original application papers, include form PTO/SB/18 "Design Patent Application Transmittal" or its equivalent.

A preexamination search was conducted. The field of search was:

D2/ 902, 908, 947, 951, 952, 957, 958, 959 and 960

Related applications: _____

If not previously filed for the above-identified application, the following items required by 37 CFR 1.155 are enclosed:

Formal drawings (see 37 CFR 1.84).

The fee set forth in 37 CFR 1.17(k).

An information disclosure statement in compliance with 37 CFR 1.98.

Approved 4-6-06
Jacqueline M. Stone
Jacqueline M. Stone, Director
Technology Center 1700

February 23, 2006
Date

Signature

202-824-3000
Telephone Number

Robert S. Katz, Reg. No. 36,402
Typed or printed name

WARNING: Information on this form may become public. Credit card information should not be included on this form. Provide credit card information and authorization on PTO-2038.

This collection of information is required by 37 CFR 1.155. The information is required to obtain or retain a benefit by the public which is to file (and by the USPTO to process) an application. Confidentiality is governed by 35 U.S.C. 122 and 37 CFR 1.14. This collection is estimated to take 6 minutes to complete, including gathering, preparing, and submitting the completed application form to the USPTO. Time will vary depending upon the individual case. Any comments on the amount of time you require to complete this form and/or suggestions for reducing this burden, should be sent to the Chief Information Officer, U.S. Patent and Trademark Office, U.S. Department of Commerce, P.O. Box 1450, Alexandria, VA 22313-1450. DO NOT SEND FEES OR COMPLETED FORMS TO THIS ADDRESS. SEND TO: Mail Stop Expedited Design, Commissioner for Patents, P.O. Box 1450, Alexandria, VA 22313-1450.

If you need assistance in completing the form, call 1-800-PTO-9199 and select option 2.

02/24/2006 LUONDINI 00000058 190733 29254313
04 FC:1002 900.00 DA

UNITED STATES PATENT AND TRADEMARK OFFICE

Commissioner for Patents
United States Patent and Trademark Office
P.O. Box 1450
Alexandria, VA 22313-1450
www.uspto.gov

COPY MAILED

JUL 0 1 2008

OFFICE OF PETITIONS

MARK BROWN
4700 BELLEVIEW SUITE 210
KANSAS CITY MO 64112

In re Application of :
Lydia P. Schmitt :
Application No. 29/254,346 : ON PETITION
Filed: February 22, 2006 :
Attorney Docket No. 3781 :

This is a decision on the petition under 37 CFR 1.137(b), filed October 5, 2007, to revive the above-identified application.

The petition is **GRANTED**.

The above-identified application became abandoned for failure to submit the issue fee and publication fee in a timely manner in reply to the Notice of Allowance mailed May 10, 2007, which set a statutory period for reply of three (3) months. Accordingly, the above-identified application became abandoned on August 11, 2007.

There is no indication that petitioner has submitted an Issue Fee Transmittal Form (PTOL-85b). Accordingly, if petitioner desires to have the information normally found thereon printed on the patent, the attached blank Issue Fee Transmittal Form should be completed and returned to the Office of Data Management within **ONE MONTH** from the mail date of this decision.

Telephone inquiries concerning this decision should be directed to the undersigned at (571) 272-3208.

This matter is being referred to the Office of Data Management to be processed into a patent.

Karen Creasy
Petitions Examiner
Office of Petitions

ATTACHMENT: Blank (PTOL-85(b) Issue Fee Transmittal

PART B - FEE(S) TRANSMITTAL

Complete and send this form, together with applicable fee(s), to: Mail **Mail Stop ISSUE FEE**
Commissioner for Patents
P.O. Box 1450
Alexandria, Virginia 22313-1450
or Fax (571) 273-2885

INSTRUCTIONS: This form should be used for transmitting the ISSUE FEE and PUBLICATION FEE (if required). Blocks 1 through 5 should be completed where appropriate. All further correspondence including the Patent, advance orders and notification of maintenance fees will be mailed to the current correspondence address as indicated unless corrected below or directed otherwise in Block 1, by (a) specifying a new correspondence address; and/or (b) indicating a separate "FEE ADDRESS" for maintenance fee notifications.

CURRENT CORRESPONDENCE ADDRESS (Note: Use Block 1 for any change of address)

Note: A certificate of mailing can only be used for domestic mailings of the Fee(s) Transmittal. This certificate cannot be used for any other accompanying papers. Each additional paper, such as an assignment or formal drawing, must have its own certificate of mailing or transmission.

Certificate of Mailing or Transmission

I hereby certify that this Fee(s) Transmittal is being deposited with the United States Postal Service with sufficient postage for first class mail in an envelope addressed to the Mail Stop ISSUE FEE address above, or being facsimile transmitted to the USPTO (571) 273-2885, on the date indicated below.

(Depositor's name)
(Signature)
(Date)

APPLICATION NO.	FILING DATE	FIRST NAMED INVENTOR	ATTORNEY DOCKET NO.	CONFIRMATION NO.

TITLE OF INVENTION:

APPLN. TYPE	SMALL ENTITY	ISSUE FEE	PUBLICATION FEE	TOTAL FEE(S) DUE	DATE DUE

EXAMINER	ART UNIT	CLASS-SUBCLASS

1. Change of correspondence address or indication of "Fee Address" (37 CFR 1.363).

☐ Change of correspondence address (or Change of Correspondence Address form PTO/SB/122) attached.

☐ "Fee Address" indication (or "Fee Address" Indication form PTO/SB/47; Rev 03-02 or more recent) attached. **Use of a Customer Number is required.**

2. For printing on the patent front page, list

(1) the names of up to 3 registered patent attorneys or agents OR, alternatively,

(2) the name of a single firm (having as a member a registered attorney or agent) and the names of up to 2 registered patent attorneys or agents. If no name is listed, no name will be printed.

1 _____

2 _____

3 _____

3. ASSIGNEE NAME AND RESIDENCE DATA TO BE PRINTED ON THE PATENT (print or type)

PLEASE NOTE: Unless an assignee is identified below, no assignee data will appear on the patent. If an assignee is identified below, the document has been filed for recordation as set forth in 37 CFR 3.11. Completion of this form is NOT a substitute for filing an assignment.

(A) NAME OF ASSIGNEE

(B) RESIDENCE: (CITY and STATE OR COUNTRY)

Please check the appropriate assignee category or categories (will not be printed on the patent) : ☐ Individual ☐ Corporation or other private group entity ☐ Government

4a. The following fee(s) are enclosed:

☐ Issue Fee

☐ Publication Fee (No small entity discount permitted)

☐ Advance Order - # of Copies _____

4b. Payment of Fee(s):

☐ A check in the amount of the fee(s) is enclosed.

☐ Payment by credit card. Form PTO-2038 is attached.

☐ The Director is hereby authorized by charge the required fee(s), or credit any overpayment, to Deposit Account Number _____ (enclose an extra copy of this form).

5. **Change in Entity Status** (from status indicated above)

☐ a. Applicant claims SMALL ENTITY status. See 37 CFR 1.27.

☐ b. Applicant is no longer claiming SMALL ENTITY status. See 37 CFR 1.27(g)(2).

The Director of the USPTO is requested to apply the Issue Fee and Publication Fee (if any) or to re-apply any previously paid issue fee to the application identified above.
NOTE: The Issue Fee and Publication Fee (if required) will not be accepted from anyone other than the applicant; a registered attorney or agent; or the assignee or other party in interest as shown by the records of the United States Patent and Trademark Office.

Authorized Signature _____ Date _____

Typed or printed name _____ Registration No. _____

This collection of information is required by 37 CFR 1.311. The information is required to obtain or retain a benefit by the public which is to file (and by the USPTO to process) an application. Confidentiality is governed by 35 U.S.C. 122 and 37 CFR 1.14. This collection is estimated to take 12 minutes to complete, including gathering, preparing, and submitting the completed application form to the USPTO. Time will vary depending upon the individual case. Any comments on the amount of time you require to complete this form and/or suggestions for reducing this burden, should be sent to the Chief Information Officer, U.S. Patent and Trademark Office, U.S. Department of Commerce, P.O. Box 1450, Alexandria, Virginia 22313-1450. DO NOT SEND FEES OR COMPLETED FORMS TO THIS ADDRESS. SEND TO: Commissioner for Patents, P.O. Box 1450, Alexandria, Virginia 22313-1450.

Under the Paperwork Reduction Act of 1995, no persons are required to respond to a collection of information unless it displays a valid OMB control number.

Privacy Act Statement

The **Privacy Act of 1974 (P.L. 93-579)** requires that you be given certain information in connection with your submission of the attached form related to a patent application or patent. Accordingly, pursuant to the requirements of the Act, please be advised that: (1) the general authority for the collection of this information is 35 U.S.C. 2(b)(2); (2) furnishing of the information solicited is voluntary; and (3) the principal purpose for which the information is used by the U.S. Patent and Trademark Office is to process and/or examine your submission related to a patent application or patent. If you do not furnish the requested information, the U.S. Patent and Trademark Office may not be able to process and/or examine your submission, which may result in termination of proceedings or abandonment of the application or expiration of the patent.

The information provided by you in this form will be subject to the following routine uses:

1. The information on this form will be treated confidentially to the extent allowed under the Freedom of Information Act (5 U.S.C. 552) and the Privacy Act (5 U.S.C 552a). Records from this system of records may be disclosed to the Department of Justice to determine whether disclosure of these records is required by the Freedom of Information Act.
2. A record from this system of records may be disclosed, as a routine use, in the course of presenting evidence to a court, magistrate, or administrative tribunal, including disclosures to opposing counsel in the course of settlement negotiations.
3. A record in this system of records may be disclosed, as a routine use, to a Member of Congress submitting a request involving an individual, to whom the record pertains, when the individual has requested assistance from the Member with respect to the subject matter of the record.
4. A record in this system of records may be disclosed, as a routine use, to a contractor of the Agency having need for the information in order to perform a contract. Recipients of information shall be required to comply with the requirements of the Privacy Act of 1974, as amended, pursuant to 5 U.S.C. 552a(m).
5. A record related to an International Application filed under the Patent Cooperation Treaty in this system of records may be disclosed, as a routine use, to the International Bureau of the World Intellectual Property Organization, pursuant to the Patent Cooperation Treaty.
6. A record in this system of records may be disclosed, as a routine use, to another federal agency for purposes of National Security review (35 U.S.C. 181) and for review pursuant to the Atomic Energy Act (42 U.S.C. 218(c)).
7. A record from this system of records may be disclosed, as a routine use, to the Administrator, General Services, or his/her designee, during an inspection of records conducted by GSA as part of that agency's responsibility to recommend improvements in records management practices and programs, under authority of 44 U.S.C. 2904 and 2906. Such disclosure shall be made in accordance with the GSA regulations governing inspection of records for this purpose, and any other relevant (*i.e.*, GSA or Commerce) directive. Such disclosure shall not be used to make determinations about individuals.
8. A record from this system of records may be disclosed, as a routine use, to the public after either publication of the application pursuant to 35 U.S.C. 122(b) or issuance of a patent pursuant to 35 U.S.C. 151. Further, a record may be disclosed, subject to the limitations of 37 CFR 1.14, as a routine use, to the public if the record was filed in an application which became abandoned or in which the proceedings were terminated and which application is referenced by either a published application, an application open to public inspection or an issued patent.
9. A record from this system of records may be disclosed, as a routine use, to a Federal, State, or local law enforcement agency, if the USPTO becomes aware of a violation or potential violation of law or regulation.

UNITED STATES PATENT AND TRADEMARK OFFICE

Commissioner for Patents
United States Patent and Trademark Office
P.O. Box 1450
Alexandria, VA 22313-1450
www.uspto.gov

COPY MAILED

FEB 06 2007

OFFICE OF PETITIONS

ABELMAN, FRAYNE & SCHWAB
666 THIRD AVENUE, 10TH FLOOR
NEW YORK, NY 10017

In re Application of	:	
Patrick Hunt	:	
Application No. 29/254,419	:	DECISION GRANTING PETITION
Filed: February 22, 2006	:	
Attorney Docket No. 207,461	:	

This is a decision on the petition filed November 22, 2006, under 37 CFR 1.10(c) requesting that the above-cited application be accorded a filing date of February 22, 2006, rather than the presently accorded filing date of February 23, 2006.

Petitioner alleges that the application was deposited with the Express Mail Service on February 22, 2006. In support of the allegation, the petition is accompanied by a copy of the Express Mail postcard with a tracking number ER059675419US showing a "date-in" of February 22, 2006. The tracking number cited is the same number found on the application transmittal sheet that accompanied the original application papers. The evidence is convincing that the application papers were deposited on February 22, 2006.

In view of the above, the petition is granted. The new filing date for the above-cited application is February 22, 2006.

The Office of Initial Patent Examination will further process the application with a filing date of February 22, 2006, and issue a corrected filing receipt.

Any inquiries related to this decision should be directed to the undersigned at (571)272-3222.

Kenya A. McLaughlin
Petitions Attorney
Office of Petitions

UNITED STATES PATENT AND TRADEMARK OFFICE

Commissioner for Patents
United States Patent and Trademark Office
P.O. Box 1450
Alexandria, VA 22313-1450
www.uspto.gov

COPY MAILED

FEB 20 2007

OFFICE OF PETITIONS

ABELMAN, FRAYNE & SCHWAB
666 THIRD AVENUE, 10TH FLOOR
NEW YORK, NY 10017

In re Application of	:	
Patrick Hunt	:	
Application No. 29/254,419	:	DECISION GRANTING PETITION
Filed: February 22, 2006	:	
Attorney Docket No. 207.461	:	

This is a decision on the petition filed November 22, 2006, under 37 CFR 1.10 requesting that the response to the "Notice to File Missing Parts of Nonprovisional Application" be accorded a filing date of October 13, 2006, rather than the presently accorded filing date of October 14, 2006.

Petitioner alleges that the response to the "Notice to File Missing Parts of Nonprovisional Application" was deposited with the Express Mail Service on October 13, 2006. In support of the allegation, the petition is accompanied by a copy of the Express Mail label with a tracking number ER059677114US showing a "date-in" of October 13, 2006. The tracking number cited is the same number found on the "Statement of Filing by Express Mail 37 CFR 1.10" that accompanied the response to the "Notice to File Missing Parts of Nonprovisional Application." The evidence is convincing that the response to the "Notice to File Missing Parts of Nonprovisional Application" was deposited on October 13, 2006.

In view of the above, the petition is granted. The new filing date for the response to the "Notice to File Missing Parts of Nonprovisional Application" is October 13, 2006.

The application is being directed to Technology Center 2900, GAU 2915 for further processing.

Any inquiries related to this decision should be directed to the undersigned at (571)272-3222.

Kenya A. McLaughlin
Petitions Attorney
Office of Petitions

UNITED STATES PATENT AND TRADEMARK OFFICE

Commissioner for Patents
United States Patent and Trademark Office
P.O. Box 1450
Alexandria, VA 22313-1450
www.uspto.gov

MYERS & KAPLAN
INTELLECTUAL PROPERTY LAW, L.L.C.
CUMBERLAND CENTER II
3100 CUMBERLAND BLVD , SUITE 1400
ATLANTA GA 30339

COPY MAILED
SEP 2 5 2008

In re Application of	:	
Jared W. **Hanlon** et al.	:	
Application No. 29/254,444	:	DECISION ON PETITION
Filed: February 23, 2006	:	
Attorney Docket No.	:	

This is a decision on the petition under 37 CFR 1.137(b), filed July 16, 2008, to revive the above-identified design application.

The petition is **GRANTED**.

The application became abandoned for failure to timely pay the issue fee on or before June 15, 2007, as required by the Notice of Allowance and Fee(s) Due, mailed March 15, 2007, which set a statutory period for reply of three (3) months. Accordingly, the application became abandoned on June 16, 2007. A Notice of Abandonment was mailed on July 11, 2007.

The petition satisfies the requirements of 37 CFR 1.137(b) in that petitioner has supplied (1) the reply in the form of the $410.00 issue fee, (2) the petition fee of $770.00, (3) a proper statement of unintentional delay, and (4) a terminal disclaimer and fee as required by 37 CFR 1.137(d). Accordingly, the failure to timely pay the issue fee as required by the Notice of Allowance is accepted as being unintentionally delayed.

The terminal disclaimer is accepted and has been made of record. Any continuing application filed from this application must contain a copy of the terminal disclaimer. The copy of the terminal disclaimer must be filed with a cover letter requesting the terminal disclaimer be recorded on the continuing application. A copy of this decision should be attached to the cover letter.

Telephone inquiries concerning this decision should be directed to Phyllis Spivack at 571-272-6051 or in her absence, the undersigned at (571) 272-7099.

David Buccil
Petitions Examiner
Office of Petitions

UNITED STATES PATENT AND TRADEMARK OFFICE

Commissioner for Patents
United States Patent and Trademark Office
P.O. Box 1450
Alexandria, VA 22313-1450
www.uspto.gov

HENRY LAW FIRM
P.O. BOX 1105
FAYETTEVILLE AR 72702

COPY MAILED

SEP 19 2007

OFFICE OF PETITIONS

In re Application of	:	ON PETITION
Williams, Wayne	:	
Application No. 29/254,536	:	
Filed: February 24, 2006	:	
Attorney Docket No. 6011	:	

This is a decision on the petition under 37 C.F.R. § 1.137(b), filed August 27, 2007, to revive the above-identified application.

The petition is **GRANTED.**

The petition satisfies the conditions for revival pursuant to the provisions of 37 CFR 1.137(b) in that (1) the reply in the form of Corrected Drawings; (2) the petition fee; (3) the required statement of unintentional delay; and (4) the terminal disclaimer have been received. Accordingly, the response has been accepted as having been unintentionally delayed.

This matter is being referred to the Publishing Division for processing into a patent.

Telephone inquiries regarding this decision should be directed to the undersigned at (571) 272-3206.

Liana Walsh
Petitions Examiner
Office of Petitions

PTO/SB/27 (09-04)
Approved for use through 07/31/2006. OMB 0651-0031
U.S. Patent and Trademark Office; U.S DEPARTMENT OF COMMERCE
Under the Paperwork Reduction ACT of 1995, no persons are required to respond to collection of information unless it displays a valid OMB control number.

REQUEST FOR EXPEDITED EXAMINATION OF A DESIGN APPLICATION (37 CFR 1.155)

Application Number	
Filing Date	02-24-2006
First Named Inventor	Pennington
Title	Gun Cleaning Case
Atty Docket Number	06-01-05.1DA

ADDRESS TO:

MAIL STOP EXPEDITED DESIGN
COMMISSIONER FOR PATENTS
P.O. Box 1450
Alexandria, VA 22313-1450

Approved 4-6-06
Jacqueline M. Stone
Jacqueline M. Stone, Director
Technology Center 1700

113006 U.S. PTO
29/254566
022406

This is a request for expedited examination of a design application under 37 CFR 1.155.

NOTE: If the Request made by this form accompanies original application papers, include form PTO/SB/18 "Design Patent Application Transmittal" or its equivalent.

A preexamination search was conducted. The field of search was:

42/95, 42/90, 206/362, D9/307

02/28/2006 AKELECH1 00000089 29254566
04 FC:1802 900.00 OP

Related applications: None

If not previously filed for the above-identified application, the following items required by 37 CFR 1.155 are enclosed:

- Formal drawings (see 37 CFR 1.84).
- The fee set forth in 37 CFR 1.17(k).
- An information disclosure statement in compliance with 37 CFR 1.98.

Signature: Mark Crossley — Date: 02-24-2006

Typed or printed name: Mark Crossley — Registration Number, if applicable: 48,136

Telephone Number: 970-252-1138

WARNING: Information on this form may become public. Credit card information should not be included on this form. Provide credit card information and authorization on PTO-2038.

This collection of information is required by 37 CFR 1.155. The information is required to obtain or retain a benefit by the public which is to file (and by the USPTO to process) an application. Confidentiality is governed by 35 U.S.C. 122 and 37 CFR 1.11 and 1.14. This collection is estimated to take 6 minutes to complete, including gathering, preparing, and submitting the completed application form to the USPTO. Time will vary depending upon the individual case. Any comments on the amount of time you require to complete this form and/or suggestions for reducing this burden, should be sent to the Chief Information Officer, U.S. Patent and Trademark Office, U.S. Department of Commerce, P.O. Box 1450, Alexandria, VA 22313-1450. DO NOT SEND FEES OR COMPLETED FORMS TO THIS ADDRESS. SEND TO: Commissioner for Patents, P.O. Box 1450, Alexandria, VA 22313-1450.

If you need assistance in completing the form, call 1-800-PTO-9199 and select option 2.

UNITED STATES PATENT AND TRADEMARK OFFICE

Commissioner for Patents
United States Patent and Trademark Office
P.O. Box 1450
Alexandria, VA 22313-1450
www.uspto.gov

SUGHRUE MION PLLC
2100 PENNSYLVANIA AVENUE, NW
SUITE 800
WASHINGTON, DC 20037

COPY MAILED

APR 24 2007

OFFICE OF PETITIONS

In re Application of	:
Daita Itoi	:DECISION GRANTING PETITION
Application No. 29/254,601	:UNDER 37 CFR 1.313(c)(3)
Filed: February 27, 2006	:
Attorney Docket No. Q93535	:

This is a decision on the petition under 37 CFR 1.313(c)(3), filed April 23, 2007, to withdraw the above-identified application from issue after payment of the issue fee.

The petition is **GRANTED**.

The above-identified application is hereby withdrawn from issue in favor of a continued prosecution application (CPA) under 37 CFR 1.53(d).

Petitioner is advised that the issue fee paid on April 9, 2007 in the parent application is not refundable nor can it be applied towards any new Notice of Allowance which may issue on the CPA filed April 23, 2007.

Telephone inquiries should be directed to the undersigned at (571) 272-3218.

This matter is being referred to Technology Center AU 2913 for processing of the CPA and for consideration of the concurrently filed Information Disclosure Statement.

Frances Hicks
Petitions Examiner
Office of Petitions

UNITED STATES PATENT AND TRADEMARK OFFICE

Commissioner for Patents
United States Patent and Trademark Office
P.O. Box 1450
Alexandria, VA 22313-1450
www.uspto.gov

GALASSO & ASSOCIATES, LP
P.O. BOX 26503
AUSTIN, TX 78755-0503

COPY MAILED

OCT 26 2007

OFFICE OF PETITIONS

In re Application of	:	
Sherry L. Sappington et al	:	
Application No. 29/254,656	:	ON PETITION
Filed: February 27, 2006	:	
Attorney Docket No. 1723.050468	:	

This is a decision on the petition under 37 CFR 1.137(b), filed July 5, 2007, to revive the above-identified application.

The petition is **GRANTED**.

The above-identified application became abandoned for failure to reply in a timely manner to the Notice of Missing Requirements (Notice) mailed March 13, 2006. The Notice set a period for reply of two (2) months from the mail date of the Notice. No extension of time under the provisions of 37 CFR 1.136(a) were obtained. Accordingly, the above-identified application became abandoned on May 14, 2006.

Telephone inquiries concerning this decision should be directed to Irvin Dingle at (571) 272-3210.

This matter is being referred to the Initial Patent Examination Unit.

Irvin Dingle
Petitions Examiner
Office of Petitions

UNITED STATES PATENT AND TRADEMARK OFFICE

Commissioner for Patents
United States Patent and Trademark Office
P.O. Box 1450
Alexandria, VA 22313-1450
www.uspto.gov
DIW Jun-06

NATH & ASSOCIATES
112 SOUTH WEST STREET
ALEXANDRIA VA 22314

COPY MAILED
JUN 0 2 2006
OFFICE OF PETITIONS

In re Application of	:	
Kaneko et al.	:	
Application No. 29/254,683	:	ON PETITION
Filed: 30 March, 2006	:	
Atty Docket No. 27268D	:	

This is a decision on the petition under 37 CFR 1.53, filed on 30 March, 2006, which is being treated as a petition requesting that the above-identified application be accorded a filing date of 28 February, 2006.[1]

The petition is **DISMISSED**.

On 28 February, 2006, the application was deposited. The filing included, *inter alia*, a transmittal letter, a declaration, four (4) sheets of drawings, a foreign priority document, and payment of the design application filing fee.

On 21 March, 2006, Initial Patent Examination Division mailed a Notice of Incomplete Nonprovisional Application, stating that the specification was missing and did not include at least one claim. A complete specification in compliance with 35 U.S.C. § 112, and that the filing date would be the date of receipt of a claim in compliance with 35 U.S.C. § 112.

In response, on 30 March, 2006, the present petition was filed. One page of specification, including a claim, was filed with the present petition.

The argument and evidence supplied with the petition have been carefully considered, but are not persuasive. The USPTO has a well-established and well-publicized practice of providing a

[1] See MPEP 506.

receipt for papers filed in the USPTO to any applicant desiring a receipt. The practice requires that any paper for which a receipt is desired be filed in the USPTO with a self-addressed postcard identifying the paper. A postcard receipt which itemizes and properly identifies the papers which are being filed serves as prima facie evidence of receipt in the USPTO of all the items listed thereon on the date stamped thereon by the USPTO. See section 503, Manual of Patent Examining Procedure (MPEP 503). Unfortunately, petitioners' postcard receipt does not exhibit a USPTO "Office date" stamp. As such, the postcard cannot serve as evidence of deposit of the items listed thereon on a date specific. Furthermore, an application transmittal letter (or filing receipt) is, at best, only evidence of what was intended to be filed, not evidence of what was actually received or filed in the USPTO.

If petitioners have a copy of an itemized postcard which has been stamped by the USPTO with the date of receipt, that postcard should be submitted with a renewed petition.

As such, the petition is dismissed without prejudice to reconsideration pending submission of evidence that one (1) page of specification, including a claim, was filed on 28 February, 2006.

The application will be processed and examined with a filing date of 30 March, 2006, using the original application papers and the one (1) page of specification and claim(s) filed on that date. As stated below, an oath or declaration covering the application papers filed on 30 March, 2006, must be submitted within TWO (2) MONTHS of the mailing date of this decision.

As this petition was not necessitated by an error on the part of the USPTO, the petition fee of $400.00 is required. Although petitioners submitted a check for $400.00, the fee has already been refunded by Treasury check. As such, the petition fee will be charged to counsel's deposit account, as authorized on the application transmittal sheet, a copy of which has been supplied with the present petition.

NOTICE TO FILE MISSING PARTS

Petitioners must submit an oath or declaration in compliance with 37 CFR 1.63, identifying the application by Application Number and filing date, covering the specification filed on 30 March, 2006, within TWO (2) MONTHS of this decision in order to avoid abandonment of the application. This time period may be extended in accordance with 37 CFR 1.136(a).

Further correspondence with respect to this matter should be addressed as follows:

By mail: Mail Stop PETITIONS
Commmissioner for Patents
Alexandria, VA 22313-1450

By FAX: (571) 272-8300
Attn: Office of Petitions

By hand: Customer Service Window
Mail Stop Petitions
Randolph Building
401 Dulany Street
Alexandria, VA 22314

The application is being referred to the Initial Patent Examination Division for further processing with a filing date of 30 March, 2006, using the original application papers and the one (1) page of specification, including the claim(s) filed on that date.

Telephone inquiries concerning this matter may be directed to the undersigned at (571) 272-3231.

D Wood

Douglas I. Wood
Senior Petitions Attorney
Office of Petitions

UNITED STATES PATENT AND TRADEMARK OFFICE

Commissioner for Patents
United States Patent and Trademark Office
P.O. Box 1450
Alexandria, VA 22313-1450
www.uspto.gov
DIW Aug-06

NATH & ASSOCIATES
112 SOUTH WEST STREET
ALEXANDRIA VA 22314

COPY MAILED
AUG 22 2006
OFFICE OF PETITIONS

In re Application of	:	
Kaneko et al.	:	
Application No. 29/254,683	:	ON PETITION
Filed: 28 February, 2006	:	
Atty Docket No. 27268D	:	

This is a decision on the renewed petition under 37 CFR 1.53, filed on 13 June, 2006, which is being treated as a petition requesting that the above-identified application be accorded a filing date of 28 February, 2006.[1]

The petition is **GRANTED**.

On 28 February, 2006, the application was filed. The application papers included, *inter alia*, a transmittal letter, a declaration, four (4) sheets of drawings, a foreign priority document, and payment of the design application filing fee.

On 21 March, 2006, Initial Patent Examination Division mailed a Notice of Incomplete Nonprovisional Application, stating that the specification was missing and did not include at least one claim. A complete specification in compliance with 35 U.S.C. § 112, and that the filing date would be the date of receipt of a claim in compliance with 35 U.S.C. § 112.

In response, on 30 March, 2006, a petition was filed. One page of specification, including a claim, was filed. Accordingly, on 2 June, 2006, the petition was dismissed, and the application accorded a filing date of 30 March, 2006.

On 13 June, 2006, the present renewed petition was filed. Petitioners again assert that a complete specification, including

[1] See MPEP 506.

a claim, was present on 28 February, 2006. In support, petitioners have presented an itemized receipt identifying the application by attorney docket number, first named inventor's last name, and invention title, itemizing, *inter alia*, "1 page Textual Specification with 1 claim", containing an "Office date" stamp of 28 February, 2006.

A review of the record reveals that no page of specification received on 28 February, 2006, is located among the application papers received on that date. However, the evidence is convincing that the application papers deposited on 28 February, 2006, included one (1) page of specification, including one (1) claim, which was subsequently misplaced in the Office. Therefore, the application, including one (1) page of specification including one claim, is entitled to a filing date of 28 February, 2006.

In view of the above, the petition is granted. The Notice of Incomplete Provisional Application is withdrawn. As the petition was necessitated by an error on the part of the Office, no petition fee is due. The petition fee submitted with the present petition will be credited to counsel's deposit account, as authorized on the application transmittal sheet filed with the original application papers.

The application will be processed with a filing date of 28 February, 2006, using the copy of the one (1) sheets of drawings supplied on 30 March, 2006, as a part of the original disclosure.

The application is being referred to the Initial Patent Examination Division for reprocessing with a filing date of 28 February, 2006, using the original application papers and the one (1) page of specification, including the claim, filed with the original petition.

Telephone inquiries concerning this matter may be directed to the undersigned at (571) 272-3231.

D Wood

Douglas I. Wood
Senior Petitions Attorney
Office of Petitions

UNITED STATES PATENT AND TRADEMARK OFFICE

Commissioner for Patents
United States Patent and Trademark Office
P.O. Box 1450
Alexandria, VA 22313-1450
www.uspto.gov

SUGHRUE MION PLLC
2100 PENNSYLVANIA AVENUE, NW
SUITE 800
WASHINGTON, DC 20037

COPY MAILED

APR 24 2007

OFFICE OF PETITIONS

In re Application of	:
Daita Itoi	:DECISION GRANTING PETITION
Application No. 29/254,690	:UNDER 37 CFR 1.313(c)(3)
Filed: February 28, 2006	:
Attorney Docket No. Q93534	:

This is a decision on the petition under 37 CFR 1.313(c)(3), filed April 23, 2007, to withdraw the above-identified application from issue after payment of the issue fee.

The petition is **GRANTED.**

The above-identified application is hereby withdrawn from issue in favor of a continued prosecution application (CPA) under 37 CFR 1.53(d).

Petitioner is advised that the issue fee paid on April 9, 2007 in the parent application is not refundable nor can it be applied towards any new Notice of Allowance which may issue on the CPA filed April 23, 2007.

Telephone inquiries should be directed to the undersigned at (571) 272-3218.

This matter is being referred to Technology Center AU 2913 for processing of the CPA and for consideration of the concurrently filed Information Disclosure Statement.

Frances Hicks
Petitions Examiner
Office of Petitions

UNITED STATES PATENT AND TRADEMARK OFFICE

Commissioner for Patents
United States Patent and Trademark Office
P.O. Box 1450
Alexandria, VA 22313-1450
www.uspto.gov

SUGHRUE MION PLLC
2100 PENNSYLVANIA AVENUE, NW
SUITE 800
WASHINGTON, DC 20037

COPY MAILED

APR 24 2007

OFFICE OF PETITIONS

In re Application of	:
Sotaro Iwabuchi	:DECISION GRANTING PETITION
Application No. 29/254,696	:UNDER 37 CFR 1.313(c)(3)
Filed: February 28, 2006	:
Attorney Docket No. Q93538	:

This is a decision on the petition under 37 CFR 1.313(c)(3), filed April 23, 2007, to withdraw the above-identified application from issue after payment of the issue fee.

The petition is **GRANTED.**

The above-identified application is hereby withdrawn from issue in favor of a continued prosecution application (CPA) under 37 CFR 1.53(d).

Petitioner is advised that the issue fee paid on March 7, 2007 in the parent application is not refundable nor can it be applied towards any new Notice of Allowance which may issue on the CPA filed April 23, 2007.

Telephone inquiries should be directed to the undersigned at (571) 272-3218.

This matter is being referred to Technology Center AU 2913 for processing of the CPA and for consideration of the concurrently filed Information Disclosure Statement.

Frances Hicks
Petitions Examiner
Office of Petitions

UNITED STATES PATENT AND TRADEMARK OFFICE

Commissioner for Patents
United States Patent and Trademark Office
P.O. Box 1450
Alexandria, VA 22313-1450
www.uspto.gov

CROSSLEY PATENT LAW
400 SOUTH THIRD STREET
MONTROSE CO 81401

COPY MAILED
JAN 07 2008
OFFICE OF PETITIONS

In re Application of	:	
Billy Pennington	:	
Application No. 29/254,732	:	ON PETITION
Filed: February 28, 2006	:	
Attorney Docket No. 06-01-05DA	:	

This is a decision on the petition to withdraw the holding of abandonment under 37 CFR 1.181, filed December 14, 2007.

The petition under 37 CFR 1.181 is **DISMISSED**.

Any request for reconsideration of this decision must be submitted within **TWO (2) MONTHS** from the mail date of this decision. The reconsideration request should include a cover letter entitled "Renewed Petition under 37 CFR 1.181". Extensions of time under 37 CFR 1.136(a) are permitted. No fee is required for a renewed petition.

The Office mailed a Notice of Allowance on August 3, 2007. This Notice set a statutory period for reply of three (3) months for issue fee transmittal. No issue fee having been received, the application became abandoned on November 4, 2007. The Office mailed a Notice of Abandonment on November 30, 2007. Petitioner filed the instant petition on December 14, 2007, asserting that he never received the Notice of Allowance.

To establish nonreceipt of an Office action, a petitioner must: 1) include a statement that the Office action was not received; 2) attest to the fact that a search of the file jacket and docket records indicates that the Office action was not received; and 3) include a copy of the docket record where the nonreceived Office action would have been entered had it been received and docketed.[1] A proper docket report consists of a "docket record where the nonreceived Office action would have been entered had it been received and docketed."[2] "For example, if a three month period for reply was set in the nonreceived Office action, a copy of the docket record showing **all** replies docketed for a date three months from the mail date of the nonreceived Office action must be submitted..."[3]

Here, the docket record submitted on petition is only a copy of the prosecution history for the instant application. As set forth above, to establish that the August 3, 2007 Notice of Allowance was not received, petitioner would need to submit his docket records showing all of his replies docketed for the due date of November 3, 2007.

Further correspondence with respect to this matter should be addressed as follows:

By mail: Mail Stop Petitions
Commissioner for Patents
P.O. Box 1450
Alexandria VA 22313-1450

By FAX: (571) 273-8300
Attn: Office of Petitions

Telephone inquiries related to this decision should be directed to the undersigned at (571)272-3207.

Cliff Congo
Petitions Attorney
Office of Petitions

---

[1] See MPEP 711.03(c)(II).

[2] MPEP 711.03(c)(II) (emphasis added).

[3] Id.

UNITED STATES PATENT AND TRADEMARK OFFICE

Commissioner for Patents
United States Patent and Trademark Office
P.O. Box 1450
Alexandria, VA 22313-1450
www.uspto.gov

CROSSLEY PATENT LAW
400 SOUTH THIRD STREET
MONTROSE CO 81401

COPY MAILED

MAR 3 1 2009

OFFICE OF PETITIONS

In re Application of :
Billy Pennington :
Application No. 29/254,732 : ON PETITION
Filed: February 28, 2006 :
Attorney Docket No. 06-01-05DA :

This is a decision on the petition to revive under 37 CFR 1.137(b), filed March 11, 2009

The petition under 37 CFR 1.137(b) is **DISMISSED**.

Any request for reconsideration of this decision must be submitted within **TWO (2) MONTHS** from the mail date of this decision. The reconsideration request should include a cover letter entitled "Renewed Petition under 37 CFR 1.137(b)". Extensions of time under 37 CFR 1.136(a) are permitted. No further petition fee is required for a renewed petition.

The Office mailed a Notice of Allowance on August 3, 2007. This Notice set a statutory period for reply of three (3) months for issue fee transmittal. No issue fee having been received, the application became abandoned on November 4, 2007. The Office mailed a Notice of Abandonment on November 30, 2007. Petitioner filed a petition on December 14, 2007, asserting that he never received the Notice of Allowance. However, the petition was dismissed in a decision mailed on January 7, 2008.

A grantable petition under 37 CFR 1.137(b) must be accompanied by: (1) the required reply, unless previously filed; (2) the petition fee as set forth in 37 CFR 1.17(m); (3) a statement that the entire delay in filing the required reply from the due date for the reply until the filing of a grantable petition pursuant to 37 CFR 1.137(b) was unintentional; and (4) any terminal disclaimer (and fee as set forth in 37 CFR 1.20(d)) required by 37 CFR 1.137(d).

The instant petition lacks item (1) - the required reply.

With the instant petition, petitioner submitted $400 for the issue fee. However, effective October 2, 2008, the small entity issue fee for a design application was increased to $430. No authorization to charge any additional fees to a deposit account was present.

Accordingly, on renewed petition, petitioner must submit the balance of $30 for the issue fee.

The file does not indicate a change of address has been submitted, although the address given on the petition differs from the address of record. If appropriate, a change of address should be filed in accordance with MPEP 601.03. A courtesy copy of this decision is being mailed to the address given on the petition; however, the Office will mail all future correspondence solely to the address of record.

Further correspondence with respect to this matter should be addressed as follows:

By mail: Mail Stop Petitions
Commissioner for Patents
P.O. Box 1450
Alexandria VA 22313-1450

By FAX: (571) 273-8300
Attn: Office of Petitions

Telephone inquiries related to this decision should be directed to the undersigned at (571)272-3207.

Cliff Congo
Petitions Attorney
Office of Petitions

cc: Mark Crossley
236 South Third Street #287
Montrose, CO 81401

UNITED STATES PATENT AND TRADEMARK OFFICE

Commissioner for Patents
United States Patent and Trademark Office
P.O. Box 1450
Alexandria, VA 22313-1450
www.uspto.gov

MAILED

SEP 09 2009

OFFICE OF PETITIONS

CROSSLEY PATENT LAW
400 SOUTH THIRD STREET
MONTROSE CO 81401

In re Application of	:	
Billy Pennington	:	
Application No. 29/254,732	:	ON PETITION
Filed: February 28, 2006	:	
Attorney Docket No. 06-01-05DA	:	

This is a decision on the renewed petition to revive under 37 CFR 1.137(b), filed July 31, 2009

The petition under 37 CFR 1.137(b) is **GRANTED**.

The Office mailed a Notice of Allowance on August 3, 2007. This Notice set a statutory period for reply of three (3) months for issue fee transmittal. No issue fee having been received, the application became abandoned on November 4, 2007. The Office mailed a Notice of Abandonment on November 30, 2007. Petitioner filed a petition on December 14, 2007, asserting that he never received the Notice of Allowance. However, the petition was dismissed in a decision mailed on January 7, 2008. Petitioner next filed a petition to revive under 37 CFR 1.137(b) on March 11, 2009. However, that petition was dismissed in a decision mailed on March 31, 2009. The petition was dismissed because applicant did not submit the issue fee in full (applicant submitted $400, when the issue fee was $430).

With the instant renewed petition, petitioner has submitted the balance of the issue fee due.

The application is being forwarded to the Office of Data Management for processing into a patent.

Telephone inquiries related to this decision should be directed to the undersigned at (571)272-3207.

Cliff Congo
Petitions Attorney
Office of Petitions

UNITED STATES PATENT AND TRADEMARK OFFICE

Commissioner for Patents
United States Patent and Trademark Office
P.O. Box 1450
Alexandria, VA 22313-1450
www.uspto.gov

BRADLEY N. RUBEN, PC
463 FIRST ST, SUITE 5A
HOBOKEN, NJ 07030

COPY MAILED

MAR 0 5 2008

OFFICE OF PETITIONS

In re Application of :
Morris Sussman :
Application No. 29/254,785 : ON PETITION
Filed: February 28, 2006 :
Attorney Docket No. 120LD-024 :

This is a decision on the petition under 37 CFR 1.137(b), filed on August 29, 2007, to revive the above-identified application.

The application became abandoned for failure to timely respond to the non-final Office action mailed September 9, 2006. A Notice of Abandonment was mailed on April 12, 2007.

As authorized, the $65 terminal disclaimer fee filed on August 29, 2007 has been charged to petitioner's deposit account.

The petition satisfies the requirements of 37 CFR 1.137(b), in that, petitioner has supplied (1) the reply in the form of an amendment, specification, one sheet of replacement drawings containing Figures 1-4, and $65 for the filing of a terminal disclaimer; (2) the petition fee of $750; and (3) a proper statement of unintentional delay. Therefore, the petition is **GRANTED**.

The terminal disclaimer under 37 CFR 1.137(d), filed August 29, 2007, has been accepted and made of record. Any continuing application filed from this application must contain a copy of the terminal disclaimer. The copy of the terminal disclaimer must be filed with a cover letter requesting the terminal disclaimer be recorded on the continuing application. A copy of this decision should be attached to the cover letter.

This application file is being referred to Technology Center Art Unit 2916 for further processing.

Telephone inquiries concerning this decision should be directed to the undersigned at (571) 272-3226.

Andrea Smith
Petitions Examiner
Office of Petitions

PTO/SB/27 (09-04)
Approved for use through 07/31/2006. OMB 0651-0031
U.S. Patent and Trademark Office; U.S DEPARTMENT OF COMMERCE
Under the Paperwork Reduction ACT of 1995, no persons are required to respond to collection of information unless it displays a valid OMB control number.

REQUEST FOR EXPEDITED EXAMINATION OF A DESIGN APPLICATION (37 CFR 1.155)

Application Number	Not yet assigned
Filing Date	Herewith
First Named Inventor	Arni Thor Ingimundarson et al.
Title	Knee Brace
Atty Docket Number	ING13017/JEK/JJC

ADDRESS TO:
MAIL STOP EXPEDITED DESIGN
COMMISSIONER FOR PATENTS
P.O. Box 1450
Alexandria, VA 22313-1450

113000 U.S. PTO
29/254809
030106

This is a request for expedited examination of a design application under 37 CFR 1.155.

Approved 4-6-06
Jacqueline M. Stone
Jacqueline M. Stone, Director
Technology Center 1700

NOTE: If the Request made by this form accompanies original application papers, include form PTO/SB/18 "Design Patent Application Transmittal" or its equivalent.

A preexamination search was conducted. The field of search was:

602/14; 602/16; 602/26; 602/59; D24/190

Related applications: 11/312,416; 11/312,330; 11/312,331; 11/312,514; 11/312,337; 29/245,191

If not previously filed for the above-identified application, the following items required by 37 CFR 1.155 are enclosed:

- Formal drawings (see 37 CFR 1.84).
- The fee set forth in 37 CFR 1.17(k).
- An information disclosure statement in compliance with 37 CFR 1.98.

Signature: [signature]

Date: 3/1/06

Typed or printed name: JUSTIN J. CASSELL

Registration Number, if applicable: 46,205

Telephone Number: (703)683-0500

WARNING: Information on this form may become public. Credit card information should not be included on this form. Provide credit card information and authorization on PTO-2038.

This collection of information is required by 37 CFR 1.155. The information is required to obtain or retain a benefit by the public which is to file (and by the USPTO to process) an application. Confidentiality is governed by 35 U.S.C. 122 and 37 CFR 1.11 and 1.14. This collection is estimated to take 6 minutes to complete, including gathering, preparing, and submitting the completed application form to the USPTO. Time will vary depending upon the individual case. Any comments on the amount of time you require to complete this form and/or suggestions for reducing this burden, should be sent to the Chief Information Officer, U.S. Patent and Trademark Office, U.S. Department of Commerce, P.O. Box 1450, Alexandria, VA 22313-1450. DO NOT SEND FEES OR COMPLETED FORMS TO THIS ADDRESS. SEND TO: Commissioner for Patents, P.O. Box 1450, Alexandria, VA 22313-1450.

If you need assistance in completing the form, call 1-800-PTO-9199 and select option 2.

03/03/2006 BABRAHA1 00000035 29254809
01 FC:1802 900.00 OP

PTO/SB/27 (09-04)
Approved for use through 07/31/2006. OMB 0651-0031
U.S. Patent and Trademark Office; U.S. DEPARTMENT OF COMMERCE
Under the Paperwork Reduction Act of 1995, no persons are required to respond to a collection of information unless it displays a valid OMB control number.

REQUEST FOR EXPEDITED EXAMINATION OF A DESIGN APPLICATION (37 CFR 1.155)

Application Number	TBD
Filing Date	3/01/2006
First Named Inventor	Greg S. Melander et al.
Title	Icon For a Portion of a Display Screen
Atty Docket Number	013797.01304

113000 U.S. PTO
29/254810
030106

ADDRESS TO:
MAIL STOP EXPEDITED DESIGN
COMMISSIONER FOR PATENTS
P.O. Box 1450
Alexandria, VA 22313-1450

Approved 4-6-06
Jacqueline M. Stone
Jacqueline M. Stone, Director
Technology Center 1700

This is a request for expedited examination of a design application under 37 CFR 1.155.

NOTE: If the Request made by this form accompanies original application papers, include form PTO/SB/18 "Design Patent Application Transmittal" or its equivalent.

A preexamination search was conducted. The field of search was:

Class D14 (subclasses 485, 486, 487, 488, 489, 490, 491, 492, 493, 494, 495); Class D18 (subclasses 24, 25, 26, 27, 28, 29, 30, 31, 32, 33); Class D19 (subclasses 6, 7); Class D20 (subclasses 11, 18); Class D21 (subclasses 324, 325, 326, 327, 328, 329, 330, 331, 332, 333); Class 345 (subclasses 683, 902), Class 715 (subclasses 700-726, 762-867, 973-977)

03/03/2006 BABRAHA1 00000037 190733 29254810

Related applications:

04 FC:1802 900.00 DA

If not previously filed for the above-identified application, the following items required by 37 CFR 1.155 are enclosed:
- Formal drawings (see 37 CFR 1.84).
- The fee set forth in 37 CFR 1.17(k).
- An information disclosure statement in compliance with 37 CFR 1.98.

Signature	3/01/2006 Date
John M. Fleming Typed or printed name	56,536 Registration Number, if applicable
(202) 824-3000 Telephone Number	

WARNING: Information on this form may become public. Credit card information should not be included on this form. Provide credit card information and authorization on PTO-2038.

This collection of information is required by 37 CFR 1.155. The information is required to obtain or retain a benefit by the public which is to file (and by the USPTO to process) an application. Confidentiality is governed by 35 U.S.C. 122 and 37 CFR 1.11 and 1.14. This collection is estimated to take 6 minutes to complete, including gathering, preparing, and submitting the completed application form to the USPTO. Time will vary depending upon the individual case. Any comments on the amount of time you require to complete this form and/or suggestions for reducing this burden, should be sent to the Chief Information Officer, U.S. Patent and Trademark Office, U.S. Department of Commerce, P.O. Box 1450, Alexandria, VA 22313-1450. DO NOT SEND FEES OR COMPLETED FORMS TO THIS ADDRESS. SEND TO: Mail Stop Expedited Design, Commissioner for Patents, P.O. Box 1450, Alexandria, VA 22313-1450.
If you need assistance in completing the form, call 1-800-PTO-9199 and select option 2.

PTO/SB/27 (05-03)
Approved for use through 04/30/2003. OMB 0651-0031
U.S. Patent and Trademark Office; U.S. DEPARTMENT OF COMMERCE
Under the Paperwork Reduction Act of 1995, no persons are required to respond to a collection of information unless it displays a valid OMB control number.

REQUEST FOR EXPEDITED EXAMINATION OF A DESIGN APPLICATION (37 CFR 1.155)

Application Number	TO BE ASSIGNED
Filing Date	March 1, 2006
First Named Inventor	Bo Lupo
Title	Portion Of A Shoe Upper
Atty Docket Number	015127.00693

113000 U.S. PTO
29/254811
030106

HAND DELIVER TO THE DESIGN GROUP DIRECTOR'S OFFICE
-or- ADDRESS TO:
MAIL STOP EXPEDITED DESIGN
COMMISSIONER FOR PATENTS
P.O. Box 1450
Alexandria, VA 22313-1450

This is a request for expedited examination of a design application under 37 CFR 1.155.

NOTE: If the Request made by this form accompanies original application papers, include form PTO/SB/18 "Design Patent Application Transmittal" or its equivalent.

Approved 4-6-06
Jacqueline M. Stone
Jacqueline M. Stone, Director
Technology Center 1700

A preexamination search was conducted. The field of search was:

Class D2/902, 907, 908, 943, 944, 969, 972, 973 and 974

Related applications: _____

If not previously filed for the above-identified application, the following items required by 37 CFR 1.155 are enclosed:

03/03/2006 BABRAHA1 00000036 190733 29254811
04 FC:1802 900.00 DA

Formal drawings (see 37 CFR 1.84).

The fee set forth in 37 CFR 1.17(k).

An information disclosure statement in compliance with 37 CFR 1.98.

March 1, 2006
Date

Signature

202-824-3000
Telephone Number

David R. Gerk-Registration No. 56,901
Typed or printed name

WARNING: Information on this form may become public. Credit card information should not be included on this form. Provide credit card information and authorization on PTO-2038.

This collection of information is required by 37 CFR 1.155. The information is required to obtain or retain a benefit by the public which is to file (and by the USPTO to process) an application. Confidentiality is governed by 35 U.S.C. 122 and 37 CFR 1.14. This collection is estimated to take 6 minutes to complete, including gathering, preparing, and submitting the completed application form to the USPTO. Time will vary depending upon the individual case. Any comments on the amount of time you require to complete this form and/or suggestions for reducing this burden, should be sent to the Chief Information Officer, U.S. Patent and Trademark Office, U.S. Department of Commerce, P.O. Box 1450, Alexandria, VA 22313-1450. DO NOT SEND FEES OR COMPLETED FORMS TO THIS ADDRESS. **SEND TO: Mail Stop Expedited Design, Commissioner for Patents, P.O. Box 1450, Alexandria, VA 22313-1450.**

If you need assistance in completing the form, call 1-800-PTO-9199 and select option 2.

SPE RESPONSE FOR CERTIFICATE OF CORRECTION

DATE : 6/17/09 Paper No.: —

TO SPE OF : ART UNIT 2912

SUBJECT : Request for Certificate of Correction for Appl. No.: 29/254816 Patent No.: D539155S

Please respond to this request for a certificate of correction within 7 days.

FOR IFW FILES:

Please review the requested changes/corrections as shown in the **COCIN** document(s) in the IFW application image. No new matter should be introduced, nor should the scope or meaning of the claims be changed.

Please complete the response (see below) and forward the completed response to scanning using document code **COCX**.

FOR PAPER FILES:

Please review the requested changes/corrections as shown in the attached certificate of correction. Please complete this form (see below) and forward it with the file to:

Certificates of Correction Branch (C of C)
Randolph Square 9D62-B
Palm Location 7580

Virginia Tolbert
Certificates of Correction Branch
703-756-1591

Thank You For Your Assistance

The request for issuing the above-identified correction(s) is hereby:
Note your decision on the appropriate box.

- ☒ **Approved** — All changes apply.
- ☐ **Approved in Part** — Specify below which changes **do not** apply.
- ☐ **Denied** — State the reasons for denial below.

Comments: _____

STELLA M. REID
SUPERVISORY PATENT EXAMINER
SPE

2912
Art Unit

UNITED STATES PATENT AND TRADEMARK OFFICE

Commissioner for Patents
United States Patent and Trademark Office
P.O. Box 1450
Alexandria, VA 22313-1450
www.uspto.gov

Catherine V. Smith
4244 E. 131 Place
Thornton, CO 80241

COPY MAILED
APR 10 2006
OFFICE OF PETITIONS

In re Application of	:	
Catherine V. SMITH	:	
Application No. 29/254,840	:	DECISION ON PETITION
Filed: March 1, 2006	:	TO MAKE SPECIAL UNDER
Attorney Docket No. N/A	:	37 CFR 1.102(c)(1)
	:	

This is a decision on the petition under 37 CFR 1.102(c)(1), filed March 1, 2006, to make the above-identified application special based on applicant's age as set forth in M.P.E.P. § 708.02, Section IV.

The petition is **GRANTED**.

A grantable petition to make an application special under 37 CFR 1.102(c)(1) and MPEP § 708.02, Section IV: Applicant's Age, must be accompanied by evidence showing that at least one of the applicants is 65 years of age, or more, such as a birth certificate or a statement by applicant. No fee is required.

The instant petition includes a statement by the Applicant averring that she is over 65 years of age. Accordingly, the above-identified application has been accorded "special" status.

Telephone inquiries concerning this decision should be directed to BethAnne Dayoan at 571-272-3209.

All other inquiries concerning either the examination or status of the application should be directed to the Technology Center.

The application is being forwarded to the Technology Center Art Unit 2915 for action on the merits commensurate with this decision.

BethAnne Dayoan
Petitions Examiner
Office of Petitions

16138 U.S. PTO
030106

PTO/SB/27 (09-04)
Approved for use through 07/31/2006. OMB 0651-0031
U.S. Patent and Trademark Office; U.S DEPARTMENT OF COMMERCE
Under the Paperwork Reduction ACT of 1995, no persons are required to respond to collection of information unless it displays a valid OMB control number.

11006 U.S. PTO
29/254850
030106

REQUEST FOR EXPEDITED EXAMINATION OF A DESIGN APPLICATION (37 CFR 1.155)

Application Number	To be assigned
Filing Date	To be assigned
First Named Inventor	Doug Donald Wilken
Title	PORTION OF A SHOE UPPER
Attorney Docket Number	2465-7600US

ADDRESS TO:
MAIL STOP EXPEDITED DESIGN
COMMISSION FOR PATENTS
P.O. BOX 1450
Alexandria, VA 22313-1450

Approved 4-6-06
Jacqueline M. Stone
Jacqueline M. Stone, Director
Technology Center 1700

This is a request for expedited examination of a design application under 37 CER 1.155.

NOTE: If the Request made by this form accompanies original application papers, include form PTO/SB/18 "Design Patent Application Transmittal" or its equivalent.

A preexamination search was conducted. The field of search was:

US. CL. D2/896, D2/897, D2/902, D2/907, D2/908, D2/910 D2/911, D2/912, D2/916, D2/922, D2/935, D2/969, D2/970, D2/971, D2/972, 36/45, 36/50.1, 36/83, 36/88, 36/89, 36/93, 36/101, 36/102, 36/103, 36/104, 36/106, 36/108, 36/109, 36/113, 36/114, 36/115, 36/116, 36/126, 36/127, 36/128, 36/129, 36/130

Related applications: _____

If not previously filed for the above-identified application, the following items required by 37 CFR 1.155 are enclosed:

- Formal drawings (see 37 CFR 1.84).
- The fee set forth in 37 CFR 1.17(k).
- An information disclosure statement in compliance with 37 CFR 1.98.

Signature — 1 March 2006 Date

Laurence B. Bond — Typed or printed name

30,549 — Registration Number, if applicable

(801) 532-1922 — Telephone Number

WARNING: Information on this form may become public. Credit card information should not be included on this form. Provide credit card information and authorization on PTO-2038.

This collection of information is required by37 CFR 1.155. The information is required to obtain or retain a benefit by the public which is to file (and by the USPTO to process) an application. Confidentiality is governed by 35 U.S.C. 122 and 37 CFR 1.11 and 1.14. This collection is estimated to take 6 minutes to complete, including gathering, preparing, and submitting the completed application form to the USPTO. Time will vary depending upon the individual case. Any comments on the amount of time you require to complete this form and/or suggestions for reducing this burden, should be sent to the Chief Information Officer, U.S. Patent and Trademark Office, U.S. Department of Commerce, P.O. Box 1450, Alexandria, VA 22313-1450. DO NOT SEND FEES OR COMPLETED FORMS TO THIS ADDRESS. SEND TO: Commissioner for Patents, P.O. Box 1450, Alexandria, VA 22343-1450.
If you need assistance in completing the form, call 1-800-PTO-9199 and select option 2.

03/03/2006 BABRAHA1 00000155 29254850
01 FC:1802 900.00 OP

PTO/SB/27 (05-03)
Approved for use through 04/30/2003. OMB 0651-0031
U.S. Patent and Trademark Office; U.S. DEPARTMENT OF COMMERCE
Under the Paperwork Reduction Act of 1995, no persons are required to respond to a collection of information unless it displays a valid OMB control number.

REQUEST FOR EXPEDITED EXAMINATION OF A DESIGN APPLICATION (37 CFR 1.155)

Application Number	TBD
Filing Date	Herewith
First Named Inventor	Kevin Fallon
Title	Portion Of A Shoe Upper
Atty Docket Number	015127.00658

113006 U.S. PTO
29/254852
030206

HAND DELIVER TO THE DESIGN GROUP DIRECTOR'S OFFICE
-or- ADDRESS TO:
MAIL STOP EXPEDITED DESIGN
COMMISSIONER FOR PATENTS
P.O. Box 1450
Alexandria, VA 22313-1450

This is a request for expedited examination of a design application under 37 CFR 1.155.

NOTE: If the Request made by this form accompanies original application papers, include form PTO/SB/18 "Design Patent Application Transmittal" or its equivalent.

A preexamination search was conducted. The field of search was:

D2 896, 902, 907, 908, 943, 944, 969, 972, 973 and 974

Related applications: _____

If not previously filed for the above-identified application, the following items required by 37 CFR 1.155 are enclosed:

Formal drawings (see 37 CFR 1.84).

The fee set forth in 37 CFR 1.17(k).

An information disclosure statement in compliance with 37 CFR 1.98.

4-6-06
Approved
Jacqueline M. Stone
Jacqueline M. Stone, Director
Technology Center 1700

March 2, 2006
Date

Signature

202-824-3000
Telephone Number

Anthony W. Kandare, Reg. No. 48,830
Typed or printed name

WARNING: Information on this form may become public. Credit card information should not be included on this form. Provide credit card information and authorization on PTO-2038.

This collection of information is required by 37 CFR 1.155. The information is required to obtain or retain a benefit by the public which is to file (and by the USPTO to process) an application. Confidentiality is governed by 35 U.S.C. 122 and 37 CFR 1.14. This collection is estimated to take 6 minutes to complete, including gathering, preparing, and submitting the completed application form to the USPTO. Time will vary depending upon the individual case. Any comments on the amount of time you require to complete this form and/or suggestions for reducing this burden, should be sent to the Chief Information Officer, U.S. Patent and Trademark Office, U.S. Department of Commerce, P.O. Box 1450, Alexandria, VA 22313-1450. DO NOT SEND FEES OR COMPLETED FORMS TO THIS ADDRESS. SEND TO: Mail Stop Expedited Design, Commissioner for Patents, P.O. Box 1450, Alexandria, VA 22313-1450.

If you need assistance in completing the form, call 1-800-PTO-9199 and select option 2.

03/03/2006 JBALINAN 00000080 190733 29254852
04 FC:1802 900.00 DA

PTO/SB/27 (05-03)
Approved for use through 04/30/2003. OMB 0651-0031
U.S. Patent and Trademark Office; U.S. DEPARTMENT OF COMMERCE
Under the Paperwork Reduction Act of 1995, no persons are required to respond to a collection of information unless it displays a valid OMB control number.

REQUEST FOR EXPEDITED EXAMINATION OF A DESIGN APPLICATION (37 CFR 1.155)

Application Number	TBD
Filing Date	Herewith
First Named Inventor	Kevin Fallon
Title	Portion Of A Shoe Upper
Atty Docket Number	015127.00659

113006 U.S. PTO
29/254853
030206

HAND DELIVER TO THE DESIGN GROUP DIRECTOR'S OFFICE
-or- ADDRESS TO:
MAIL STOP EXPEDITED DESIGN
COMMISSIONER FOR PATENTS
P.O. Box 1450
Alexandria, VA 22313-1450

This is a request for expedited examination of a design application under 37 CFR 1.155.

NOTE: If the Request made by this form accompanies original application papers, include form PTO/SB/18 "Design Patent Application Transmittal" or its equivalent.

A preexamination search was conducted. The field of search was:

D2 896, 902, 907, 908, 943, 944, 969, 972, 973 and 974

Related applications: _____

If not previously filed for the above-identified application, the following items required by 37 CFR 1.155 are enclosed:

Formal drawings (see 37 CFR 1.84).

The fee set forth in 37 CFR 1.17(k).

An information disclosure statement in compliance with 37 CFR 1.98.

Approved 4-6-06
Jacqueline M. Stone
Jacqueline M. Stone, Director
Technology Center 1700

March 2, 2006
Date

Signature

202-824-3000
Telephone Number

Anthony W. Kandare, Reg. No. 48,830
Typed or printed name

WARNING: Information on this form may become public. Credit card information should not be included on this form. Provide credit card information and authorization on PTO-2038.

This collection of information is required by 37 CFR 1.155. The information is required to obtain or retain a benefit by the public which is to file (and by the USPTO to process) an application. Confidentiality is governed by 35 U.S.C. 122 and 37 CFR 1.14. This collection is estimated to take 6 minutes to complete, including gathering, preparing, and submitting the completed application form to the USPTO. Time will vary depending upon the individual case. Any comments on the amount of time you require to complete this form and/or suggestions for reducing this burden, should be sent to the Chief Information Officer, U.S. Patent and Trademark Office, U.S. Department of Commerce, P.O. Box 1450, Alexandria, VA 22313-1450. DO NOT SEND FEES OR COMPLETED FORMS TO THIS ADDRESS. SEND TO: Mail Stop Expedited Design, Commissioner for Patents, P.O. Box 1450, Alexandria, VA 22313-1450.

If you need assistance in completing the form, call 1-800-PTO-9199 and select option 2.

03/03/2006 JBALINAN 00000079 190733 29254853
04 FC:1802 900.00 DA

UNITED STATES PATENT AND TRADEMARK OFFICE

Commissioner for Patents
United States Patent and Trademark Office
P.O. Box 1450
Alexandria, VA 22313-1450
www.uspto.gov

BAKER, DONELSON, BEARMAN, CALDWELL & BERKOWITZ
SUITE 3100 SIX CONCOURSE PARKWAY
ATLANTA GA 30328

COPY MAILED

OCT 0 3 2006

OFFICE OF PETITIONS

In re Application of :
Rand Jay Krikorian et al :
Application No. 29/254,865 :
Filed: March 1, 2006 :
Attorney Docket No. 2826219-000004 :

ON PETITION

This is a decision on the petition, filed September 22, 2006, under 37 CFR 1.313(c)(3) to withdraw the above-identified application from issue after payment of the issue fee.

The petition is **GRANTED**.

The above-identified application is withdrawn from issue in favor of a continued prosecution application (CPA) under 37 CFR 1.53(d).

Petitioner is advised that the issue fee paid on September 1, 2006 in the parent application is not refundable nor can it be applied towards any new Notice of Allowance which may issue on the CPA filed September 22, 2006.

Telephone inquiries should be directed to the undersigned at (571) 272-3208.

This matter is being referred to Technology Center AU 2913 for processing of the CPA.

Karen Creasy

Karen Creasy
Petitions Examiner
Office of Petitions

PTOISB/27 (09-04)
Approved for use through 07/31/2006. OMB 0651-0031
U.S. Patent and Trademark Office; U.S DEPARTMENT OF COMMERCE
Under the Paperwork Reduction ACT of 1995, no persons are required to respond to collection of information unless it displays a valid OMB control number.

REQUEST FOR EXPEDITED EXAMINATION OF A DESIGN APPLICATION (37 CFR 1.155)

Application Number	To be assigned
Filing Date	To be assigned
First Named Inventor	Kathleen E.R. Huthmaker
Title	PORTION OF A SHOE UPPER
Attorney Docket Number	2465-7578US

ADDRESS TO:
MAIL STOP EXPEDITED DESIGN
COMMISSION FOR PATENTS
P.O. BOX 1450
Alexandria, VA 22313-1450

Approved 4-6-06
Jacqueline M. Stone
Jacqueline M. Stone, Director
Technology Center 1700

13000 U.S. PTO
29/254939
030206

This is a request for expedited examination of a design application under 37 CER 1.155.

NOTE: If the Request made by this form accompanies original application papers, include form PTO/SB/18 "Design Patent Application Transmittal" or its equivalent.

A preexamination search was conducted. The field of search was:

US. CL. D2/896, D2/897, D2/902, D2/907, D2/908, D2/910 D2/911, D2/912, D2/916, D2/922, D2/935, D2/969, D2/970, D2/971, D2/972, 36/45, 36/50.1, 36/83, 36/88, 36/89, 36/93, 36/101, 36/102, 36/103, 36/104, 36/106, 36/108, 36/109, 36/113, 36/114, 36/115, 36/116, 36/126, 36/127, 36/128, 36/129, 36/130

Related applications: _____

If not previously filed for the above-identified application, the following items required by 37 CFR 1.155 are enclosed:

- Formal drawings (see 37 CFR 1.84).
- The fee set forth in 37 CFR 1.17(k).
- An information disclosure statement in compliance with 37 CFR 1.98.

Signature — Date: 2 March 2006

Laurence B. Bond — Typed or printed name

30,549 — Registration Number, if applicable

(801) 532-1922 — Telephone Number

WARNING: Information on this form may become public. Credit card information should not be included on this form. Provide credit card information and authorization on PTO-2038.

This collection of information is required by37 CFR 1.155. The information is required to obtain or retain a benefit by the public which is to file (and by the USPTO to process) an application. Confidentiality is governed by 35 U.S.C. 122 and 37 CFR 1.11 and 1.14. This collection is estimated to take 6 minutes to complete, including gathering, preparing, and submitting the completed application form to the USPTO. Time will vary depending upon the individual case. Any comments on the amount of time you require to complete this form and/or suggestions for reducing this burden, should be sent to the Chief Information Officer, U.S. Patent and Trademark Office, U.S. Department of Commerce, P.O. Box 1450, Alexandria, VA 22313-1450. DO NOT SEND FEES OR COMPLETED FORMS TO THIS ADDRESS. SEND TO: Commissioner for Patents, P.O. Box 1450, Alexandria, VA 22343-1450.
If you need assistance in completing the form, call 1-800-PTO-9199 and select option 2.

03/06/2006 NWOLDGE1 00000078 29254939
04 FC:1802 900.00 OP

PTO/SB/27 (09-04)
Approved for use through 07/31/2006. OMB 0651-0031
U.S. Patent and Trademark Office; U.S DEPARTMENT OF COMMERCE
Under the Paperwork Reduction ACT of 1995, no persons are required to respond to collection of information unless it displays a valid OMB control number.

REQUEST FOR EXPEDITED EXAMINATION OF A DESIGN APPLICATION (37 CFR 1.155)

Application Number	To be assigned
Filing Date	To be assigned
First Named Inventor	Matthew J. Holmes
Title	PORTION OF A SHOE UPPER
Attorney Docket Number	2465-7603US

113006 U.S. PTO
29/254940
030206

ADDRESS TO:
MAIL STOP EXPEDITED DESIGN
COMMISSION FOR PATENTS
P.O. BOX 1450
Alexandria, VA 22313-1450

Approved 4-6-06
Jacqueline M. Stone
Jacqueline M. Stone, Director
Technology Center 1700

This is a request for expedited examination of a design application under 37 CER 1.155.

NOTE: If the Request made by this form accompanies original application papers, include form PTO/SB/18 "Design Patent Application Transmittal" or its equivalent.

A preexamination search was conducted. The field of search was:

US. CL. D2/896, D2/897, D2/902, D2/907, D2/908, D2/910 D2/911, D2/912, D2/916, D2/922, D2/935, D2/969, D2/970, D2/971, D2/972, 36/45, 36/50.1, 36/83, 36/88, 36/89, 36/93, 36/101, 36/102, 36/103, 36/104, 36/106, 36/108, 36/109, 36/113, 36/114, 36/115, 36/116, 36/126, 36/127, 36/128, 36/129, 36/130

Related applications: _____

If not previously filed for the above-identified application, the following items required by 37 CFR 1.155 are enclosed:

- Formal drawings (see 37 CFR 1.84).
- The fee set forth in 37 CFR 1.17(k).
- An information disclosure statement in compliance with 37 CFR 1.98.

Signature	2 March 2006 Date
Laurence B. Bond Typed or printed name	30,549 Registration Number, if applicable
(801) 532-1922 Telephone Number	

WARNING: Information on this form may become public. Credit card information should not be included on this form. Provide credit card information and authorization on PTO-2038.

This collection of information is required by37 CFR 1.155. The information is required to obtain or retain a benefit by the public which is to file (and by the USPTO to process) an application. Confidentiality is governed by 35 U.S.C. 122 and 37 CFR 1.11 and 1.14. This collection is estimated to take 6 minutes to complete, including gathering, preparing, and submitting the completed application form to the USPTO. Time will vary depending upon the individual case. Any comments on the amount of time you require to complete this form and/or suggestions for reducing this burden, should be sent to the Chief Information Officer, U.S. Patent and Trademark Office, U.S. Department of Commerce, P.O. Box 1450, Alexandria, VA 22313-1450. DO NOT SEND FEES OR COMPLETED FORMS TO THIS ADDRESS. SEND TO: Commissioner for Patents, P.O. Box 1450, Alexandria, VA 22343-1450.
If you need assistance in completing the form, call 1-800-PTO-9199 and select option 2.

03/06/2006 MWOLDGE1 00000136 29254940
04 FC:1802 900.00 OP

PTO/SB/27 (09-04)
Approved for use through 07/31/2006. OMB 0651-0031
U.S. Patent and Trademark Office; U.S DEPARTMENT OF COMMERCE
Under the Paperwork Reduction ACT of 1995, no persons are required to respond to collection of information unless it displays a valid OMB control number.

REQUEST FOR EXPEDITED EXAMINATION OF A DESIGN APPLICATION (37 CFR 1.155)

Application Number	To be assigned
Filing Date	To be assigned
First Named Inventor	Steven F. Smith
Title	PORTION OF A SHOE UPPER
Attorney Docket Number	2465-7601US

113006 U.S. PTO 29/254941 030206

ADDRESS TO:
MAIL STOP EXPEDITED DESIGN
COMMISSION FOR PATENTS
P.O. BOX 1450
Alexandria, VA 22313-1450

Approved 4-6-06
Jacqueline M. Stone
Jacqueline M. Stone, Director
Technology Center 1700

This is a request for expedited examination of a design application under 37 CER 1.155.

NOTE: If the Request made by this form accompanies original application papers, include form PTO/SB/18 "Design Patent Application Transmittal" or its equivalent.

A preexamination search was conducted. The field of search was:

US. CL. D2/896, D2/897, D2/902, D2/907, D2/908, D2/910 D2/911, D2/912, D2/916, D2/922, D2/935, D2/969, D2/970, D2/971, D2/972, 36/45, 36/50.1, 36/83, 36/88, 36/89, 36/93, 36/101, 36/102, 36/103, 36/104, 36/106, 36/108, 36/109, 36/113, 36/114, 36/115, 36/116, 36/126, 36/127, 36/128, 36/129, 36/130

Related applications: _____

If not previously filed for the above-identified application, the following items required by 37 CFR 1.155 are enclosed:

- Formal drawings (see 37 CFR 1.84).
- The fee set forth in 37 CFR 1.17(k).
- An information disclosure statement in compliance with 37 CFR 1.98.

Signature	2 March 2006 Date
Laurence B. Bond Typed or printed name	30,549 Registration Number, if applicable
(801) 532-1922 Telephone Number	

WARNING: Information on this form may become public. Credit card information should not be included on this form. Provide credit card information and authorization on PTO-2038.

This collection of information is required by37 CFR 1.155. The information is required to obtain or retain a benefit by the public which is to file (and by the USPTO to process) an application. Confidentiality is governed by 35 U.S.C. 122 and 37 CFR 1.11 and 1.14. This collection is estimated to take 6 minutes to complete, including gathering, preparing, and submitting the completed application form to the USPTO. Time will vary depending upon the individual case. Any comments on the amount of time you require to complete this form and/or suggestions for reducing this burden, should be sent to the Chief Information Officer, U.S. Patent and Trademark Office, U.S. Department of Commerce, P.O. Box 1450, Alexandria, VA 22313-1450. DO NOT SEND FEES OR COMPLETED FORMS TO THIS ADDRESS. SEND TO: Commissioner for Patents, P.O. Box 1450, Alexandria, VA 22343-1450.
If you need assistance in completing the form, call 1-800-PTO-9199 and select option 2.

03/06/2006 MWOLDGE1 00000137 29254941
14 FC:1802 900.00 OP

PTO/SB/27 (09-04)
Approved for use through 07/31/2006. OMB 0651-0031
U.S. Patent and Trademark Office; U.S DEPARTMENT OF COMMERCE
Under the Paperwork Reduction ACT of 1995, no persons are required to respond to collection of information unless it displays a valid OMB control number.

REQUEST FOR EXPEDITED EXAMINATION OF A DESIGN APPLICATION (37 CFR 1.155)

Application Number	To be assigned
Filing Date	To be assigned
First Named Inventor	David Roulo
Title	PORTION OF A SHOE UPPER
Attorney Docket Number	2465-7599US

03/06/06 U.S. PTO
29254942
030206

ADDRESS TO:
MAIL STOP EXPEDITED DESIGN
COMMISSION FOR PATENTS
P.O. BOX 1450
Alexandria, VA 22313-1450

Approved 4-6-06
Jacqueline M. Stone
Jacqueline M. Stone, Director
Technology Center 1700

This is a request for expedited examination of a design application under 37 CER 1.155.

NOTE: If the Request made by this form accompanies original application papers, include form PTO/SB/18 "Design Patent Application Transmittal" or its equivalent.

A preexamination search was conducted. The field of search was:

US. CL. D2/896, D2/897, D2/902, D2/907, D2/908, D2/910 D2/911, D2/912, D2/916, D2/922, D2/935, D2/969, D2/970, D2/971, D2/972, 36/45, 36/50.1, 36/83, 36/88, 36/89, 36/93, 36/101, 36/102, 36/103, 36/104, 36/106, 36/108, 36/109, 36/113, 36/114, 36/115, 36/116, 36/126, 36/127, 36/128, 36/129, 36/130

Related applications: _____

If not previously filed for the above-identified application, the following items required by 37 CFR 1.155 are enclosed:

- Formal drawings (see 37 CFR 1.84).
- The fee set forth in 37 CFR 1.17(k).
- An information disclosure statement in compliance with 37 CFR 1.98.

Signature — Date: 2 March 2006

Laurence B. Bond — Typed or printed name

30,549 — Registration Number, if applicable

(801) 532-1922 — Telephone Number

WARNING: Information on this form may become public. Credit card information should not be included on this form. Provide credit card information and authorization on PTO-2038.

This collection of information is required by37 CFR 1.155. The information is required to obtain or retain a benefit by the public which is to file (and by the USPTO to process) an application. Confidentiality is governed by 35 U.S.C. 122 and 37 CFR 1.11 and 1.14. This collection is estimated to take 6 minutes to complete, including gathering, preparing, and submitting the completed application form to the USPTO. Time will vary depending upon the individual case. Any comments on the amount of time you require to complete this form and/or suggestions for reducing this burden, should be sent to the Chief Information Officer, U.S. Patent and Trademark Office, U.S. Department of Commerce, P.O. Box 1450, Alexandria, VA 22313-1450. DO NOT SEND FEES OR COMPLETED FORMS TO THIS ADDRESS. SEND TO: Commissioner for Patents, P.O. Box 1450, Alexandria, VA 22343-1450.
If you need assistance in completing the form, call 1-800-PTO-9199 and select option 2.

03/06/2006 JBALINAN 00000056 29254942
04 FC:1802 900.00 OP

UNITED STATES PATENT AND TRADEMARK OFFICE

Commissioner for Patents
United States Patent and Trademark Office
P.O. Box 1450
Alexandria, VA 22313-1450
www.uspto.gov

ROBERT F. HELFING
18TH FLOOR
801 SOUTH FIGUEROA STREET
LOS ANGELES, CA 90017-5556

COPY MAILED

SEP 19 2007

OFFICE OF PETITIONS

In re Application of	:	
Jay Kassir	:	
Application No. 29/254,951	:	ON PETITION
Filed: March 2, 2006	:	
Attorney Docket No. 2107-107123	:	

This is a decision on the petition filed May 25, 2007 under 37 CFR 1.137(b), to revive the above-identified application.

The petition is **GRANTED.**

The above-identified application became abandoned for failure to submit the Issue fee in a timely manner in reply to the Notice of Allowance mailed November 2, 2006, which set a statutory period for reply of three (3) months. Accordingly, the above-identified application became abandoned on February 3, 2007.

The petition satisfies the conditions for revival pursuant to the provisions of 37 CFR 1.137(b) in that (1) the reply in the form of payment of the Issue fee; (2) the petition fee; and (3) the required statement of unintentional delay have been received. Accordingly, the issue fee is accepted as having been unintentionally delayed.

Telephone inquiries concerning this decision should be directed to the undersigned at (571) 272-3210.

This matter is being referred to the Publishing Division for further processing.

Irvin Dingle
Petitions Examiner
Office of Petitions

UNITED STATES PATENT AND TRADEMARK OFFICE

COMMISSIONER FOR PATENTS
UNITED STATES PATENT AND TRADEMARK OFFICE
P.O. BOX 1450
ALEXANDRIA, VA 22313-1450
www.uspto.gov
DIW Jul-06

BAKER, DONELSON, BEARMAN, CALDWELL & BERKOWITZ
SUITE 3100 SIX CONCOURSE PARKWAY
ATLANTA GA 30328

COPY MAILED

JUL 17 2006

OFFICE OF PETITIONS

In re Application of	:	
Hsaio-ching Huang	:	DECISION REFUSING STATUS
Application No. 29/254,980	:	UNDER 37 CFR 1.47(b)
Filed: 2 March, 2006	:	
Atty Docket No. 2786400-000424	:	

This is a decision in response to the petition filed on 12 June, 2006, under 37 CFR 1.47(b).

The petition under 37 CFR 1.47(b) is **DISMISSED**.

Rule 47 applicant is given TWO MONTHS from the mailing date of this decision to reply, correcting the below-noted deficiencies. Any reply should be entitled "Request for Reconsideration of Petition Under 37 CFR 1.47(b)," and should only address the deficiencies noted below, except that the reply may include an oath or declaration executed by the non-signing inventor. **FAILURE TO RESPOND WILL RESULT IN ABANDONMENT OF THE APPLICATION.** Extensions of time may be obtained in accordance with 37 CFR 1.136(a).

The above-identified design application was filed on 2 March, 2006, without an executed oath or declaration. Accordingly, on 20 March, 2006, Initial Patent Examination Division mailed a Notice to File Missing Parts of Nonprovisional Application requiring an oath or declaration, and a surcharge for its late filing. A two (2) month period for reply was set.

In response, on 12 June, 2006, petitioner filed the present petition and petition fee, along with a one (1) month extension of time.

Petitioner asserts that the non-signing inventor cannot be reached as the inventor no longer lives at her last known address.
A grantable petition under 37 CFR 1.47(b) requires:

(1) proof that the non-signing inventor cannot be reached or refuses to sign the oath or declaration after having been presented with the application papers (specification, claims and drawings);
(2) an acceptable oath or declaration in compliance with 35 U.S.C. §§ 115 and 116;
(3) the petition fee;
(4) a statement of the last known address of the non-signing inventor;
(5) proof of proprietary interest, and
(6) proof of irreparable damage.

The petition lacks items (1), (2), (5), and (6).

In regards to item (1), petitioner has not shown that sole inventor Huang was sent or presented with a copy of the application as filed (specification, including claims, drawings, if any, and the declaration).[1]

Petitioner may show proof that a copy of the application was sent or given to the non-signing inventors for review by providing a copy of the cover letter transmitting the application papers (specification, including claims, drawings, if any, and the declaration) to the non-signing inventors or details given in an affidavit or declaration of facts by a person having first-hand knowledge of the details.

If the application is returned as undeliverable, petitioner should present a copy of the envelope showing that the application sent to the last known address of the non-signing inventors was returned as undeliverable by the post office.

Likewise, before a *bona fide* refusal to sign the declaration can be alleged, petitioner must show that a copy of the application was sent or given to the non-signing inventor. If the inventor refuses in writing, petitioner must submit a copy of that written refusal with any renewed petition. If the refusal was made orally to a person, then that person must provide details of the refusal in an affidavit or declaration of fact.

---

[1] MPEP 409.03(d).

In regards to item (2), an oath or declaration in compliance with 37 CFR 1.63 must be supplied. The declaration must include the name, citizenship, residence, and mailing address of the non-signing inventor. If the inventor refuses to sign the declaration, the declaration must be signed by an officer of the corporation (chief executive officer, president, vice president, secretary, or treasurer) on behalf of and as agent for the non-signing inventor. The officer must identify his or her title in the declaration. If the declaration is not signed by an officer of the corporation, then proof of the authority of the person signing on behalf of the corporation must be submitted (See MPEP 409.03(b)).

In regard to item (5), petitioner has not shown sufficient proprietary interest in the subject matter to justify filing of the application under 37 CFR 1.47(b).[2] Petitioner may provide proof by showing a copy of the employment agreement between the non-signing inventor and the Rule 1.47(b) applicant (company); a copy of an assignment agreement showing that the invention disclosed in the application is assigned to the Rule 1.47(b) applicant, or a legal memorandum signed by an attorney familiar with the law of the jurisdiction stating that a court of competent jurisdiction would by the weight of authority in that jurisdiction award the title of the invention to the Rule 1.47(b) applicant.

In regards to item (6), petitioner must establish irreparable damages in accordance with MPEP 409.03(g). A statement by applicant that the filing is necessary to prevent irreparable damage or to preserve the rights of the parties is sufficient.

The address in the petition is different than the correspondence address. A copy of this decision will be mailing to the address in the petition. All future correspondence, however, will be mailed to solely to the correspondence address of record.

Further correspondence with respect to this matter should be addressed as follows:

By mail: Mail Stop Petition
Commissioner for Patents
P.O. Box 1450
Alexandria, VA 22313-1450

---

[2] MPEP 409.03(f).

By FAX: (571) 273-8300
Attn: Office of Petitions

By hand: Customer Service Window
Mail Stop Petition
Randolph Building
401 Dulany Street
Alexandria, VA 22134

Telephone inquiries related to this decision should be directed to the undersigned at (571)272-3231.

DWood

Douglas I. Wood
Senior Petitions Attorney
Office of Petitions

cc: BAKER, DONELSON, BEARMAN, CALDWELL & BERKOWITZ, PC
SUITE 900
FIVE CONCOURSE PARKWAY
ATLANTA GA 30328

UNITED STATES PATENT AND TRADEMARK OFFICE

Commissioner for Patents
United States Patent and Trademark Office
P.O. Box 1450
Alexandria, VA 22313-1450
www.uspto.gov
DIW Oct-06

BAKER, DONELSON, BEARMAN, CALDWELL & BERKOWITZ
SUITE 3100 SIX CONCOURSE PARKWAY
ATLANTA GA 30328

COPY MAILED

OCT 30 2006

OFFICE OF PETITIONS

In re Application of	:	
Hsaio-ching Huang	:	DECISION DISMISSING PETITION
Application No. 29/254,980	:	UNDER 37 CFR 1.47(b)
Filed: 2 March, 2006	:	AS MOOT
Atty Docket No. 2786400-000424	:	

Papers filed on 7 August, 2006, in response to the decision dismissing petition mailed on 17 July, 2006, included a Declaration signed by the previously non-signing inventor, Hsiao-ching Huang, in compliance with 37 CFR 1.63.

In view of the joinder of the inventor, further consideration under 37 CFR 1.47(b) is moot; this application does not have any rule 1.47(b) status and no such status should appear on the file wrapper. This application need not be returned to this office for any further consideration under 37 CFR 1.47(b).

The address in the petition is different than the correspondence address. A copy of this decision will be mailed to the address listed in the petition. All future correspondence, however, will be mailed solely to the address of record.

This application will be referred to the Office of Initial Patent Examination for further processing.

Telephone inquiries related to this decision should be directed to the undersigned at (571) 272-3231.

D Wood

Douglas I. Wood
Senior Petitions Attorney
Office of Petitions

cc: BAKER, DONELSON, BEARMAN, CALDWELL & BERKOWITZ, PC
SUITE 900
FIVE CONCOURSE PARKWAY
ATLANTA GA 30328

SPE RESPONSE FOR CERTIFICATE OF CORRECTION

Paper No.: _____

DATE : 7-9-08

TO SPE OF : ART UNIT 2916

SUBJECT : Request for Certificate of Correction for Appl. No.: 29/255050 Patent No.: D564487

Please respond to this request for a certificate of correction within 7 days.

Please review the requested changes/corrections as shown in the **COCIN** document(s) in the IFW application image. No new matter should be introduced, nor should the scope or meaning of the claims be changed.

Please Check Drawings

Please complete the response (see below) and forward the completed response to scanning using document code **COCX**.

Ennis Young

Certificates of Correction Branch

703-308-9390 ext 17

Thank You For Your Assistance

The request for issuing the above-identified correction(s) is hereby:

Note your decision on the appropriate box.

- ☒ Approved — All changes apply.
- ☐ Approved in Part — Specify below which changes do not apply.
- ☐ Denied — State the reasons for denial below.

Comments: _____

IAN SIMMONS

SUPERVISORY PATENT EXAMINER

SPE

2916

Art Unit

UNITED STATES PATENT AND TRADEMARK OFFICE

Commissioner for Patents
United States Patent and Trademark Office
P.O. Box 1450
Alexandria, VA 22313-1450
www.uspto.gov

HAVERSTOCK & OWENS LLP
162 NORTH WOLFE ROAD
SUNNYVALE CA 94086

COPY MAILED

JAN 17 2007

OFFICE OF PETITIONS

In re Application of	:	
Robert Montgomery	:	
Application No. 29/255,083	:	DECISION ON PETITION
Filed: March 3, 2006	:	TO MAKE SPECIAL UNDER
Attorney Docket No. RCM-022206SAI-2	:	37 CFR 1.102(c)(1)
	:	

This is a decision on the petition under 37 CFR 1.102(c)(1), filed December 1, 2006, to make the above-identified application special based on applicant's age as set forth in M.P.E.P. § 708.02, Section IV.

The petition is **GRANTED**.

A grantable petition to make an application special under 37 CFR 1.102(c)(1) and MPEP § 708.02, Section IV: Applicant's Age, must be accompanied by evidence showing that at least one of the applicants is 65 years of age, or more, such as a birth certificate or a statement by applicant. No fee is required.

The instant petition includes a statement from the applicant, James A. Old, declaring that he is 65 years of age or older. Accordingly, the above-identified application has been accorded "special" status.

Telephone inquiries concerning this decision should be directed to Terri Williams at 571-272-2991.

All other inquiries concerning either the examination or status of the application should be directed to the Technology Center.

The application is being forwarded to the Office of Publications for action on the merits commensurate with this decision.

Terri Williams

Terri Williams
Petitions Examiner
Office of Petitions

PTO/SB/27 (09-04)
Approved for use through 07/31/2006. OMB 0651-0031
U.S. Patent and Trademark Office; U.S DEPARTMENT OF COMMERCE
Under the Paperwork Reduction ACT of 1995, no persons are required to respond to collection of information unless it displays a valid OMB control number.

13000 U.S.PTO
29/255090
030306

REQUEST FOR EXPEDITED EXAMINATION OF A DESIGN APPLICATION (37 CFR 1.155)

Application Number	To be assigned
Filing Date	To be assigned
First Named Inventor	Nicole Mueller
Title	PORTION OF A SHOE UPPER
Attorney Docket Number	2465-7613US

ADDRESS TO:
MAIL STOP EXPEDITED DESIGN
COMMISSION FOR PATENTS
P.O. BOX 1450
Alexandria, VA 22313-1450

Approved 4-6-06
Jacqueline M. Stone
Jacqueline M. Stone, Director
Technology Center 1700

This is a request for expedited examination of a design application under 37 CER 1.155.

NOTE: If the Request made by this form accompanies original application papers, include form PTO/SB/18 "Design Patent Application Transmittal" or its equivalent.

A preexamination search was conducted. The field of search was:

US. CL. D2/896, D2/897, D2/902, D2/907, D2/908, D2/910 D2/911, D2/912, D2/916, D2/922, D2/935, D2/969, D2/970, D2/971, D2/972, 36/45, 36/50.1, 36/83, 36/88, 36/89, 36/93, 36/101, 36/102, 36/103, 36/104, 36/106, 36/108, 36/109, 36/113, 36/114, 36/115, 36/116, 36/126, 36/127, 36/128, 36/129, 36/130

Related applications: _____

If not previously filed for the above-identified application, the following items required by 37 CFR 1.155 are enclosed:

- Formal drawings (see 37 CFR 1.84).
- The fee set forth in 37 CFR 1.17(k).
- An information disclosure statement in compliance with 37 CFR 1.98.

Signature	2 March 2006 Date
Laurence B. Bond Typed or printed name	30,549 Registration Number, if applicable
(801) 532-1922 Telephone Number	

WARNING: Information on this form may become public. Credit card information should not be included on this form. Provide credit card information and authorization on PTO-2038.

This collection of information is required by37 CFR 1.155. The information is required to obtain or retain a benefit by the public which is to file (and by the USPTO to process) an application. Confidentiality is governed by 35 U.S.C. 122 and 37 CFR 1.11 and 1.14. This collection is estimated to take 6 minutes to complete, including gathering, preparing, and submitting the completed application form to the USPTO. Time will vary depending upon the individual case. Any comments on the amount of time you require to complete this form and/or suggestions for reducing this burden, should be sent to the Chief Information Officer, U.S. Patent and Trademark Office, U.S. Department of Commerce, P.O. Box 1450, Alexandria, VA 22313-1450. DO NOT SEND FEES OR COMPLETED FORMS TO THIS ADDRESS. SEND TO: Commissioner for Patents, P.O. Box 1450, Alexandria, VA 22343-1450.
If you need assistance in completing the form, call 1-800-PTO-9199 and select option 2.

PTOISB/27 (09-04)
Approved for use through 07/31/2006. OMB 0651-0031
U.S. Patent and Trademark Office; U.S DEPARTMENT OF COMMERCE
Under the Paperwork Reduction ACT of 1995, no persons are required to respond to collection of information unless it displays a valid OMB control number.

118000 U.S. PTO
29/255091
030306

REQUEST FOR EXPEDITED EXAMINATION OF A DESIGN APPLICATION (37 CFR 1.155)

Application Number	To be assigned
Filing Date	To be assigned
First Named Inventor	Tracy L. Teague
Title	PORTION OF A SHOE UPPER
Attorney Docket Number	2465-7607US

ADDRESS TO:
MAIL STOP EXPEDITED DESIGN
COMMISSION FOR PATENTS
P.O. BOX 1450
Alexandria, VA 22313-1450

Approved 4-6-06
Jacqueline M. Stone
Jacqueline M. Stone, Director
Technology Center 1700

This is a request for expedited examination of a design application under 37 CER 1.155.

NOTE: If the Request made by this form accompanies original application papers, include form PTO/SB/18 "Design Patent Application Transmittal" or its equivalent.

A preexamination search was conducted. The field of search was:

US. CL. D2/896, D2/897, D2/902, D2/907, D2/908, D2/910 D2/911, D2/912, D2/916, D2/922, D2/935, D2/969, D2/970, D2/971, D2/972, 36/45, 36/50.1, 36/83, 36/88, 36/89, 36/93, 36/101, 36/102, 36/103, 36/104, 36/106, 36/108, 36/109, 36/113, 36/114, 36/115, 36/116, 36/126, 36/127, 36/128, 36/129, 36/130

Related applications: _____

If not previously filed for the above-identified application, the following items required by 37 CFR 1.155 are enclosed:

- Formal drawings (see 37 CFR 1.84).
- The fee set forth in 37 CFR 1.17(k).
- An information disclosure statement in compliance with 37 CFR 1.98.

Signature — Date: 3 March 2006

Laurence B. Bond — Typed or printed name

30,549 — Registration Number, if applicable

(801) 532-1922 — Telephone Number

WARNING: Information on this form may become public. Credit card information should not be included on this form. Provide credit card information and authorization on PTO-2038.

This collection of information is required by37 CFR 1.155. The information is required to obtain or retain a benefit by the public which is to file (and by the USPTO to process) an application. Confidentiality is governed by 35 U.S.C. 122 and 37 CFR 1.11 and 1.14. This collection is estimated to take 6 minutes to complete, including gathering, preparing, and submitting the completed application form to the USPTO. Time will vary depending upon the individual case. Any comments on the amount of time you require to complete this form and/or suggestions for reducing this burden, should be sent to the Chief Information Officer, U.S. Patent and Trademark Office, U.S. Department of Commerce, P.O. Box 1450, Alexandria, VA 22313-1450. DO NOT SEND FEES OR COMPLETED FORMS TO THIS ADDRESS. SEND TO: **Commissioner for Patents, P.O. Box 1450, Alexandria, VA 22343-1450.**
If you need assistance in completing the form, call 1-800-PTO-9199 and select option 2.

UNITED STATES PATENT AND TRADEMARK OFFICE

Commissioner for Patents
United States Patent and Trademark Office
P.O. Box 1450
Alexandria, VA 22313-1450
www.uspto.gov

PATENT LAW & VENTURE GROUP
2424 S.E. BRISTOL, SUITE 300
NEWPORT BEACH, CA 92660

COPY MAILED

JUN 2 5 2008

OFFICE OF PETITIONS

In re Application of
Randy Blair
Application No. 29/255,150
Filed: March 2, 2006
Attorney Docket No. BLAIR.R-01

ON PETITION

This is a decision on the petition, filed March 3, 2008 under 37 CFR 1.137(b) to revive the above-identified application.

The petition is **DISMISSED.**

Any request for reconsideration of this decision must be submitted within TWO (2) MONTHS from the mail date of this decision. Extensions of time under 37 CFR 1.136(a) are permitted. The reconsideration request should include a cover letter entitled "**Renewed Petition under 37 CFR 1.137(b)**." This is **not** final agency action within the meaning of 5 U.S.C. § 704.

The above-identified application became abandoned for failure to submit the formal drawings a timely manner in reply to the Notice of Allowance mailed April 25, 2007, which set a statutory period for reply of three (3) months. Accordingly, the above-identified application became abandoned on July 26, 2007.

A grantable petition under 37 CFR 1.137(b) must be accompanied by: (1) the required reply, unless previously filed; (2) the petition fee as set forth in 37 CFR 1.17(m); (3) a statement that the entire delay in filing the required reply from the due date for the reply until the filing of a grantable petition pursuant to 37 CFR 1.137(b) was unintentional; and (4) any terminal disclaimer (and fee as set forth in 37 CFR 1.20(d)) required by 37 CFR 1.137(c). Where there is a question as to whether either the abandonment or the delay in filing a petition under 37 CFR 1.137 was unintentional, the Commissioner may require additional information. See MPEP 711.03(c)(III)(C) and (D). The instant petition lack(s) item(s) (4).

The petition does not satisfies the conditions for revival pursuant to the provisions of 37 CFR 1.137(b) in that (4) the terminal disclaimer was not received. Accordingly, this petition can not be revive until the terminal disclaimer is received.

Further correspondence with respect to this matter should be addressed as follows:

By mail: Mail Stop PETITION
Commissioner for Patents
Post Office Box 1450
Alexandria, VA 22313-1450

By hand: Customer Service Window
Randolph Building
401 Dulany Street
Alexandria, VA 22314

By facsimile: (571) 273-8300
ATTN: Office of Petitions

Telephone inquiries concerning this decision should be directed to the undersigned at (571) 272-3210.

Irvin Dingle
Petitions Examiner
Office of Petitions

UNITED STATES PATENT AND TRADEMARK OFFICE

Commissioner for Patents
United States Patent and Trademark Office
P.O. Box 1450
Alexandria, VA 22313-1450
www.uspto.gov

PATENT LAW & VENTURE GROUP
2424 S.E. BRISTOL, SUITE 300
NEWPORT BEACH, CA 92660

COPY MAILED

DEC 29 2008

OFFICE OF PETITIONS

In re Application of	:	
Randy Blair	:	
Application No. 29/255,150	:	ON PETITION
Filed: March 2, 2006	:	
Attorney Docket No. BLAIR.R-01	:	

This is a decision on the renewed petition under 37 CFR 1.137(b), filed November 25, 2008, to revive the above-identified application.

The petition is **GRANTED**.

Telephone inquiries concerning this decision should be directed to Irvin Dingle at (571) 272-3210.

This matter is being referred to Technology Center AU 2914 for further processing.

Irvin Dingle
Petitions Examiner
Office of Petitions

PTO/SB/27 (05-03)
Approved for use through 04/30/2003. OMB 0651-0031
U.S. Patent and Trademark Office; U.S. DEPARTMENT OF COMMERCE
Under the Paperwork Reduction Act of 1995, no persons are required to respond to a collection of information unless it displays a valid OMB control number.

REQUEST FOR EXPEDITED EXAMINATION OF A DESIGN APPLICATION (37 CFR 1.155)

Application Number	TBD
Filing Date	Herewith
First Named Inventor	Leonard WOZNIAK
Title	Portion Of A Shoe Upper
Atty Docket Number	015127.00691

113000 U.S. PTO
29/255164
030706

HAND DELIVER TO THE DESIGN GROUP DIRECTOR'S OFFICE
-or- ADDRESS TO:
MAIL STOP EXPEDITED DESIGN
COMMISSIONER FOR PATENTS
P.O. Box 1450
Alexandria, VA 22313-1450

This is a request for expedited examination of a design application under 37 CFR 1.155.

NOTE: If the Request made by this form accompanies original application papers, include form PTO/SB/18 "Design Patent Application Transmittal" or its equivalent.

A preexamination search was conducted. The field of search was:

D2/ 896, 902, 907, 908, 943, 944, 945, 946, 949, 972, 973, 974

Related applications: _____

If not previously filed for the above-identified application, the following items required by 37 CFR 1.155 are enclosed:

Formal drawings (see 37 CFR 1.84).

The fee set forth in 37 CFR 1.17(k).

An information disclosure statement in compliance with 37 CFR 1.98.

Approved 4-6-06
Jacqueline M. Stone
Jacqueline M. Stone, Director
Technology Center 1700

March 7, 2006
Date

Darrell G. Mottley
Signature

202-824-3000
Telephone Number

Darrell G. Mottley
Typed or printed name

WARNING: Information on this form may become public. Credit card information should not be included on this form. Provide credit card information and authorization on PTO-2038.

This collection of information is required by 37 CFR 1.155. The information is required to obtain or retain a benefit by the public which is to file (and by the USPTO to process) an application. Confidentiality is governed by 35 U.S.C. 122 and 37 CFR 1.14. This collection is estimated to take 6 minutes to complete, including gathering, preparing, and submitting the completed application form to the USPTO. Time will vary depending upon the individual case. Any comments on the amount of time you require to complete this form and/or suggestions for reducing this burden, should be sent to the Chief Information Officer, U.S. Patent and Trademark Office, U.S. Department of Commerce, P.O. Box 1450, Alexandria, VA 22313-1450. DO NOT SEND FEES OR COMPLETED FORMS TO THIS ADDRESS. SEND TO: Mail Stop Expedited Design, Commissioner for Patents, P.O. Box 1450, Alexandria, VA 22313-1450.

If you need assistance in completing the form, call 1-800-PTO-9199 and select option 2.

03/08/2006 JBALIKAN 00000072 193733 29255164
04 FC:1302 300.00 DA

PTO/SB/27 (09-04)
Approved for use through 07/31/2006. OMB 0651-0031
U.S. Patent and Trademark Office; U.S DEPARTMENT OF COMMERCE
Under the Paperwork Reduction ACT of 1995, no persons are required to respond to collection of information unless it displays a valid OMB control number.

113000 U.S.PTO
29/255165
030706

REQUEST FOR EXPEDITED EXAMINATION OF A DESIGN APPLICATION (37 CFR 1.155)

Application Number	TBA
Filing Date	March 7, 2006
First Named Inventor	Andrew CAINE
Title	Portion of a Shoe Upper
Atty Docket Number	015127.00681

ADDRESS TO:
MAIL STOP EXPEDITED DESIGN
COMMISSIONER FOR PATENTS
P.O. Box 1450
Alexandria, VA 22313-1450

This is a request for expedited examination of a design application under 37 CFR 1.155.

NOTE: If the Request made by this form accompanies original application papers, include form PTO/SB/18 "Design Patent Application Transmittal" or its equivalent.

A preexamination search was conducted. The field of search was:

D2/896, 902, 907, 908, 943, 944, 945, 946, 969, 972, 973, 974, 977

Related applications:

If not previously filed for the above-identified application, the following items required by 37 CFR 1.155 are enclosed:

- Formal drawings (see 37 CFR 1.84).
- The fee set forth in 37 CFR 1.17(k).
- An information disclosure statement in compliance with 37 CFR 1.98.

Approved 4-11-06
Jacqueline M. Stone
Jacqueline M. Stone, Director
Technology Center 1700

Signature

March 7, 2006
Date

H. Wayne Porter
Typed or printed name

42,084
Registration Number, if applicable

202-824-3000
Telephone Number

WARNING: Information on this form may become public. Credit card information should not be included on this form. Provide credit card information and authorization on PTO-2038.

This collection of information is required by 37 CFR 1.155. The information is required to obtain or retain a benefit by the public which is to file (and by the USPTO to process) an application. Confidentiality is governed by 35 U.S.C. 122 and 37 CFR 1.11 and 1.14. This collection is estimated to take 6 minutes to complete, including gathering, preparing, and submitting the completed application form to the USPTO. Time will vary depending upon the individual case. Any comments on the amount of time you require to complete this form and/or suggestions for reducing this burden, should be sent to the Chief Information Officer, U.S. Patent and Trademark Office, U.S. Department of Commerce, P.O. Box 1450, Alexandria, VA 22313-1450. DO NOT SEND FEES OR COMPLETED FORMS TO THIS ADDRESS. SEND TO: Commissioner for Patents, P.O. Box 1450, Alexandria, VA 22313-1450.

If you need assistance in completing the form, call 1-800-PTO-9199 and select option 2.

03/08/2006 JBALINAN 00000071 130733 29255165
04 FC:1802 300.00 DA

PTO/SB/27 (09-04)
Approved for use through 07/31/2006. OMB 0651-0031
U.S. Patent and Trademark Office; U.S DEPARTMENT OF COMMERCE
Under the Paperwork Reduction ACT of 1995, no persons are required to respond to collection of information unless it displays a valid OMB control number.

REQUEST FOR EXPEDITED EXAMINATION OF A DESIGN APPLICATION (37 CFR 1.155)

Application Number	To be assigned
Filing Date	To be assigned
First Named Inventor	Jeff Rasmussen
Title	PORTION OF A SHOE UPPER
Attorney Docket Number	2465-7574US

ADDRESS TO:
MAIL STOP EXPEDITED DESIGN
COMMISSION FOR PATENTS
P.O. BOX 1450
Alexandria, VA 22313-1450

Approved 4-6-06
Jacqueline M. Stone
Jacqueline M. Stone, Director
Technology Center 1700

113000 U.S. PTO
29/255166
030606

This is a request for expedited examination of a design application under 37 CER 1.155.

NOTE: If the Request made by this form accompanies original application papers, include form PTO/SB/18 "Design Patent Application Transmittal" or its equivalent.

A preexamination search was conducted. The field of search was:

US. CL. D2/896, D2/897, D2/902, D2/907, D2/908, D2/910 D2/911, D2/912, D2/916, D2/922, D2/935, D2/969, D2/970, D2/971, D2/972, 36/45, 36/50.1, 36/83, 36/88, 36/89, 36/93, 36/101, 36/102, 36/103, 36/104, 36/106, 36/108, 36/109, 36/113, 36/114, 36/115, 36/116, 36/126, 36/127, 36/128, 36/129, 36/130

Related applications: _____

If not previously filed for the above-identified application, the following items required by 37 CFR 1.155 are enclosed:

- Formal drawings (see 37 CFR 1.84).
- The fee set forth in 37 CFR 1.17(k).
- An information disclosure statement in compliance with 37 CFR 1.98.

Signature — 20 March 2006 Date

Laurence B. Bond — Typed or printed name

30,549 — Registration Number, if applicable

(801) 532-1922 — Telephone Number

WARNING: Information on this form may become public. Credit card information should not be included on this form. Provide credit card information and authorization on PTO-2038.

This collection of information is required by37 CFR 1.155. The information is required to obtain or retain a benefit by the public which is to file (and by the USPTO to process) an application. Confidentiality is governed by 35 U.S.C. 122 and 37 CFR 1.11 and 1.14. This collection is estimated to take 6 minutes to complete, including gathering, preparing, and submitting the completed application form to the USPTO. Time will vary depending upon the individual case. Any comments on the amount of time you require to complete this form and/or suggestions for reducing this burden, should be sent to the Chief Information Officer, U.S. Patent and Trademark Office, U.S. Department of Commerce, P.O. Box 1450, Alexandria, VA 22313-1450. DO NOT SEND FEES OR COMPLETED FORMS TO THIS ADDRESS. SEND TO: Commissioner for Patents, P.O. Box 1450, Alexandria, VA 22343-1450.
If you need assistance in completing the form, call 1-800-PTO-9199 and select option 2.

03/08/2006 FFAHAEIA 00000070 29255166
04 FC:1802 900.00 OP

UNITED STATES PATENT AND TRADEMARK OFFICE

Commissioner for Patents
United States Patent and Trademark Office
P.O. Box 1450
Alexandria, VA 22313-1450
www.uspto.gov
DIW Mar-07

TRASK BRITT
P.O. BOX 2550
SALT LAKE CITY UT 84110

COPY MAILED

MAR 2 2 2007

OFFICE OF PETITIONS

In re Application of	:	
Jeff Rasmussen	:	
Application No. 29/255,166	:	ON PETITION
Filed: 6 March, 2006	:	
Atty Docket No. 2465-7574US	:	

This is a decision on the "PETITION TO WITHDRAW ABANDONMENT UNDER 37 CFR 1.181(A) OR IN THE ALTERNATIVE PETITION FOR LATE ACCEPTANCE OF ISSUE FEE OR IN THE ALTERNATIVE PETITION FOR REVIVAL UNDER 37 CFR 1.137(b)," filed on 21 November, 2006, which is treated as a petition under 37 CFR 1.181 and under 37 CFR 1.137(b).[1].

---

[1] Effective December 1, 1997, the provisions of 37 CFR 1.137(b) now provide that where the delay in reply was unintentional, a petition may be filed to revive an abandoned application or a lapsed patent pursuant to 37 CFR 1.137(b). A grantable petition filed under the provisions of 37 CFR 1.137(b) must be accompanied by:

(1) the required reply, unless previously filed. In a nonprovisional application abandoned for failure to prosecute, the required reply may be met by the filing of a continuing application. In a nonprovisional utility or plant application filed on or after June 8, 1995, and abandoned for failure to prosecute, the required reply may also be met by the filing of a request for continuing examination in compliance with § 1.114. In an application or patent, abandoned or lapsed for failure to pay the issue fee or any portion thereof, the required reply must be the payment of the issue fee or any outstanding balance thereof.

(2) the petition fee as set forth in 37 CFR 1.17(m);

(3) a statement that the entire delay in filing the required reply from the due date for the reply until the filing of a grantable petition pursuant to 37 CFR 1.137(b) was unintentional. The Commissioner may required additional information where there is a question whether the delay was unintentional; and

(4) any terminal disclaimer (and fee as set forth in 37 CFR 1.20(d)) required pursuant to 37 CFR 1.137(c)).

The petition to withdraw the holding of abandonment under 37 CFR 1.181 is **DISMISSED**.

The petition under 37 CFR 1.137(b) is **GRANTED**.

The application became abandoned on 5 August, 2006, for failure to timely submit the issue fee as required by the Notice of Allowance and Fee(s) mailed on 5 May, 2006, which set a three (3) month statutory period for reply. On 11 May, 2006, a Fee(s) Transmittal form was filed, authorizing the issue fee to be charged to counsel's deposit account. The deposit account, however, did not contain a sufficient balance to charge the issue fee. Notice of Abandonment was mailed on 22 September, 2006.

PETITION TO WITHDRAW THE HOLDING OF ABANDONMENT

Petitioner argues that the holding of abandonment should be withdrawn because petitioner's counsel was not advised until 2 October, 2006, that the deposit account had insufficient funds. Counsel further asserts that:

> In fact, the official Monthly Statement of Deposit Account, provided to applicant's counsel by the Office clearly showed a balance in excess of $9,000.00 was present in the deposit account at the time when the Office was requested to pay the issue fee from applicant's counsel's deposit account.

Petitioner's argument has been considered, but is not persuasive. A close review of Office financial records reveals that on 12 May, 2006, the deposit account balance fee fell below the $800.00 amount required for the issue fee, before being replenished. As such, insufficient funds were in the deposit account at time the Office attempted to charge the issue fee.

37 CFR 1.25(b) states that an authorization to charge a fee to a deposit account will not be considered payment of the fee on the date the authorization to charge the fee is effective as to the particular fee to be charged unless sufficient funds are present in the account to cover the fee.

An amount sufficient to cover all fees, services, copies, etc., request must always be on deposit. Charges to accounts with insufficient funds will not be accepted.[2] An authorization to charge a fee to a deposit account will not be considered payment

[2] 37 CFR 1.25(a).

of the fee on the date the authorization to charge the fee is effective as to the particular fee to be charged unless sufficient funds are present in the account to cover the fee.[3]

As petitioner did not ensure that an adequate balance was present to pay the issue fee, the application was properly held abandoned.

Additionally, with respect to petitioner's assertion that the Office did not timely notify petitioners that the Office was unable to charge the issue fee, it is the responsibility of the applicants, not the Office, to ensure that a proper and timely response is filed. While the Office attempts to timely notify applicants of deficiencies in their responses, it is under no obligation to do so.[4]

Moreover, petitioner's failure to keep sufficient funds in the deposit account constitutes an avoidable mistake. Withdrawal of the holding of abandonment is not warranted when an applicant makes an avoidable mistake. As the application was properly held abandoned, the petition under 37 CFR 1.181 is dismissed.

As no fee is due for a petition to withdraw the holding of abandonment, the $130.00 fee paid with the petition will be credited to counsel's deposit account.

PETITION TO REVIVE.

Receipt of the issue fee is acknowledged.

The terminal disclaimer filed on 21 November, 2006, under 37 CFR 1.137(c) has been entered and made of record. Effective 8 September, 2000, 37 CFR 1.137(c)(1) has been added to state that a terminal disclaimer filed pursuant to this rule must dedicate to the public a terminal part of the term of any patent granted thereon equivalent to the lesser of: 1) the period of abandonment of the application; or 2) the period extending beyond twenty years from the date on which the application for patent was filed in the United States, or, if the application contains a specific reference to an earlier filed application(s) under 35 U.S.C. 120,

---

[3] 37 CFR 1.25(b).

[4] See In re Sivertz, 227 USPQ 255, 256 (Comm'r Pat. 1985); see also In re Colombo, Inc., 33 USPQ2d 1530, 1532 (Comm'r Pat. 1994)(while the Office attempts to notify applicants of deficiencies in their responses in a manner permitting a timely correction, the Office has no obligation to notify parties of deficiencies in their responses in a manner permitting a timely correction).

121, or 365(c).[5] Accordingly, the period of the terminal disclaimer filed on 21 November, 2006, will be equivalent to the lesser period (1) or (2), as noted above, for this application.

The application is being referred to the Publishing Division for processing into a patent.

Telephone inquiries related to this decision should be directed to the undersigned at 571-272-3231.

D Wood

Douglas I. Wood
Senior Petitions Attorney
Office of Petitions

[5] 65 Fed. Reg. 54,674 (2000).

UNITED STATES PATENT AND TRADEMARK OFFICE

Commissioner for Patents
United States Patent and Trademark Office
P.O. Box 1450
Alexandria, VA 22313-1450
www.uspto.gov

CROWELL & MORING LLP
INTELLECTUAL PROPERTY GROUP
P.O. BOX 14300
WASHINGTON DC 20044-4300

COPY MAILED

FEB 23 2007

OFFICE OF PETITIONS

In re Application of	:	
Marc Michael Markefka	:	
Application No. 29/255,185	:	ON PETITION
Filed: March 7, 2006	:	
Attorney Docket No. 080437.23515US	:	

This is a decision on the petition, filed February 22, 2007, under 37 CFR 1.313(c)(3) to withdraw the above-identified application from issue after payment of the issue fee.

The petition is **GRANTED**.

The above-identified application is withdrawn from issue in favor of a continued prosecution application (CPA) under 37 CFR 1.53(d).

Petitioner is advised that the issue fee paid on February 9, 2007 in the parent application is not refundable nor can it be applied towards any new Notice of Allowance which may issue on the CPA filed February 22, 2007.

Telephone inquiries should be directed to the undersigned at (571) 272-3208.

This matter is being referred to Technology Center AU 2915 for processing of the CPA.

Karen Creasy

Karen Creasy
Petitions Examiner
Office of Petitions

UNITED STATES PATENT AND TRADEMARK OFFICE

Commissioner for Patents
United States Patent and Trademark Office
P.O. Box 1450
Alexandria, VA 22313-1450
www.uspto.gov

COPY MAILED

MAR 1 2 2008

OFFICE OF PETITIONS

HAYNES AND BOONE, LLP
901 MAIN STREET
SUITE 3100
DALLAS TX 75202

In re Application of

TREACY, Terrence
Application No. 29/255,198
Filed: March 06, 2006
Attorney Docket No. 18913.29

DECISION ON PETITION
TO WITHDRAW
FROM RECORD

This is a decision on the Request to Withdraw as attorney or agent of record under 37 C.F.R. § 1.36(b), filed January 15, 2008.

The request is **APPROVED**.

A grantable request to withdraw as attorney/agent of record must be signed by every attorney/agent seeking to withdraw or contain a clear indication that one attorney is signing on behalf of another/others. A request to withdraw will not be approved unless at least 30 (thirty) days would remain between the date of approval and the later of the expiration date of a time to file a response or the expiration date of the maximum time period which can be extended under 37 C.F.R. § 1.136(a).

The request was signed by David McCombs on behalf of all attorneys of record who are associated with customer No. 27683. All attorneys/agents associated have been withdrawn. Applicant is reminded that there is no attorney of record at this time.

The request to change the correspondence of record is not acceptable as the requested correspondence address is not that of: (1) the first named signing inventor; or (2) an intervening assignee of the entire interest under 37 C.F.R 3.71. All future communications from the Office will be directed to the signing inventor at the first copied address below until otherwise properly notified by the applicant.

Telephone inquiries concerning this decision should be directed to Tredelle Jackson at 571-272-2783.

Monica A. Graves
Petitions Examiner
Office of Petitions

cc: **TERRENCE TREACY**
7108 TWIN OAKS CT.
MANSFIELD, TX 76063

cc: **MICHAEL R. GRAIF**
VENABLE, LLP
575 7TH STREET, NW
WASHINGTON, DC 20004

UNITED STATES PATENT AND TRADEMARK OFFICE

Commissioner for Patents
United States Patent and Trademark Office
P.O. Box 1450
Alexandria, VA 22313-1450
www.uspto.gov

COPY MAILED
NOV 14 2006
OFFICE OF PETITIONS

GROSSMAN, TUCKER, PERREAULT & PFLEGER, PLLC
55 SOUTH COMMERICAL STREET
MANCHESTER, NH 03101

In re Application of Hofmann	:	
Application No. 29/255,209	:	Decision According Status
Filed: March 6, 2006	:	Under 37 CFR 1.47(b)
Attorney Docket No. HHS109	:	
For: Spectacles	:	

This is in response to the petition under 37 CFR 1.47(b), filed August 1, 2006.

The petition is **granted**.

The application and papers have been reviewed and found in compliance with 37 CFR 1.47(b). This application is hereby accorded Rule 1.47(b) status.

As provided in Rule 1.47(c), this Office will forward notice of this application's filing to the non-signing inventor at the address given in the petition. Notice of the filing of this application will also be published in the Official Gazette.

The petition states the petition fee accompanies the petition. However, Office records fail to indicate the $200 petition fee was received. Therefore, the fee of $200 has been charged to petitioner's deposit account.

The Office of Initial Patent Examination will be informed of the instant decision so that it may continue to prepare the application for examination.

Telephone inquiries regarding this communication should be directed to Petitions Attorney Steven Brantley at (571) 272-3203.

Charles Steven Brantley
Senior Petitions Attorney
Office of Petitions

PTO/SB/27 (09-04)
Approved for use through 07/31/2006. OMB 0651-0031
U.S. Patent and Trademark Office; U.S DEPARTMENT OF COMMERCE
Under the Paperwork Reduction ACT of 1995, no persons are required to respond to collection of information unless it displays a valid OMB control number.

REQUEST FOR EXPEDITED EXAMINATION OF A DESIGN APPLICATION (37 CFR 1.155)

Application Number	To be assigned
Filing Date	To be assigned
First Named Inventor	Bo Lupo
Title	PORTION OF A SHOE UPPER
Attorney Docket Number	2465-7577US

1 3000 U.S. PTO
29/255263
030606

ADDRESS TO:
MAIL STOP EXPEDITED DESIGN
COMMISSION FOR PATENTS
P.O. BOX 1450
Alexandria, VA 22313-1450

Approved 4-6-06
Jacqueline M. Stone
Jacqueline M. Stone, Director
Technology Center 2900

This is a request for expedited examination of a design application under 37 CER 1.155.

NOTE: If the Request made by this form accompanies original application papers, include form PTO/SB/18 "Design Patent Application Transmittal" or its equivalent.

A preexamination search was conducted. The field of search was:

US. CL. D2/896, D2/897, D2/902, D2/907, D2/908, D2/910 D2/911, D2/912, D2/916, D2/922, D2/935, D2/969, D2/970, D2/971, D2/972, 36/45, 36/50.1, 36/83, 36/88, 36/89, 36/93, 36/101, 36/102, 36/103, 36/104, 36/106, 36/108, 36/109, 36/113, 36/114, 36/115, 36/116, 36/126, 36/127, 36/128, 36/129, 36/130

Related applications: _____

If not previously filed for the above-identified application, the following items required by 37 CFR 1.155 are enclosed:

- Formal drawings (see 37 CFR 1.84).
- The fee set forth in 37 CFR 1.17(k).
- An information disclosure statement in compliance with 37 CFR 1.98.

Signature — Date: 2 March 2005

Laurence B. Bond — Typed or printed name

30,549 — Registration Number, if applicable

(801) 532-1922 — Telephone Number

WARNING: Information on this form may become public. Credit card information should not be included on this form. Provide credit card information and authorization on PTO-2038.

This collection of information is required by37 CFR 1.155. The information is required to obtain or retain a benefit by the public which is to file (and by the USPTO to process) an application. Confidentiality is governed by 35 U.S.C. 122 and 37 CFR 1.11 and 1.14. This collection is estimated to take 6 minutes to complete, including gathering, preparing, and submitting the completed application form to the USPTO. Time will vary depending upon the individual case. Any comments on the amount of time you require to complete this form and/or suggestions for reducing this burden, should be sent to the Chief Information Officer, U.S. Patent and Trademark Office, U.S. Department of Commerce, P.O. Box 1450, Alexandria, VA 22313-1450. DO NOT SEND FEES OR COMPLETED FORMS TO THIS ADDRESS. SEND TO: Commissioner for Patents, P.O. Box 1450, Alexandria, VA 22343-1450.
If you need assistance in completing the form, call 1-800-PTO-9199 and select option 2.

03/09/2006 WABDELR1 00000007 29255263
01 FC:1802 900.00 OP

PTO/SB/27 (09-04)
Approved for use through 07/31/2006. OMB 0651-0031
U.S. Patent and Trademark Office; U.S DEPARTMENT OF COMMERCE
Under the Paperwork Reduction ACT of 1995, no persons are required to respond to collection of information unless it displays a valid OMB control number.

13000 U.S.PTO
29/255264
030606

REQUEST FOR EXPEDITED EXAMINATION OF A DESIGN APPLICATION (37 CFR 1.155)

Application Number	To be assigned
Filing Date	To be assigned
First Named Inventor	Leo S. Chang
Title	PORTION OF A SHOE UPPER
Attorney Docket Number	2465-7612US

ADDRESS TO:
MAIL STOP EXPEDITED DESIGN
COMMISSION FOR PATENTS
P.O. BOX 1450
Alexandria, VA 22313-1450

Approved 4-6-06
Jacqueline M. Stone
Jacqueline M. Stone, Director
Technology Center 1700

This is a request for expedited examination of a design application under 37 CER 1.155.

NOTE: If the Request made by this form accompanies original application papers, include form PTO/SB/18 "Design Patent Application Transmittal" or its equivalent.

A preexamination search was conducted. The field of search was:

US. CL. D2/896, D2/897, D2/902, D2/907, D2/908, D2/910 D2/911, D2/912, D2/916, D2/922, D2/935, D2/969, D2/970, D2/971, D2/972, 36/45, 36/50.1, 36/83, 36/88, 36/89, 36/93, 36/101, 36/102, 36/103, 36/104, 36/106, 36/108, 36/109, 36/113, 36/114, 36/115, 36/116, 36/126, 36/127, 36/128, 36/129, 36/130

Related applications: _____

If not previously filed for the above-identified application, the following items required by 37 CFR 1.155 are enclosed:

- Formal drawings (see 37 CFR 1.84).
- The fee set forth in 37 CFR 1.17(k).
- An information disclosure statement in compliance with 37 CFR 1.98.

Signature	2 March 2006 Date
Laurence B. Bond Typed or printed name	30,549 Registration Number, if applicable
(801) 532-1922 Telephone Number	

WARNING: Information on this form may become public. Credit card information should not be included on this form. Provide credit card information and authorization on PTO-2038.

This collection of information is required by37 CFR 1.155. The information is required to obtain or retain a benefit by the public which is to file (and by the USPTO to process) an application. Confidentiality is governed by 35 U.S.C. 122 and 37 CFR 1.11 and 1.14. This collection is estimated to take 6 minutes to complete, including gathering, preparing, and submitting the completed application form to the USPTO. Time will vary depending upon the individual case. Any comments on the amount of time you require to complete this form and/or suggestions for reducing this burden, should be sent to the Chief Information Officer, U.S. Patent and Trademark Office, U.S. Department of Commerce, P.O. Box 1450, Alexandria, VA 22313-1450. DO NOT SEND FEES OR COMPLETED FORMS TO THIS ADDRESS. SEND TO: Commissioner for Patents, P.O. Box 1450, Alexandria, VA 22343-1450.
If you need assistance in completing the form, call 1-800-PTO-9199 and select option 2.

03/09/2006 WABDELR1 00000008 29255264
01 FC:1802 900.00 OP

22713 U.S. PTO
030706

PTOISB/27 (09-04)
Approved for use through 07/31/2008. OMB 0651-0031
U.S. Patent and Trademark Office; U.S DEPARTMENT OF COMMERCE
Under the Paperwork Reduction ACT of 1995, no persons are required to respond to collection of information unless it displays a valid OMB control number.

113000 U.S. PTO
29/255265
030706

REQUEST FOR EXPEDITED EXAMINATION OF A DESIGN APPLICATION (37 CFR 1.155)

Application Number	To be assigned
Filing Date	To be assigned
First Named Inventor	Ann-Marie Paz
Title	PORTION OF A SHOE UPPER
Attorney Docket Number	2465-7616US

ADDRESS TO:
MAIL STOP EXPEDITED DESIGN
COMMISSION FOR PATENTS
P.O. BOX 1450
Alexandria, VA 22313-1450

Approved 4-6-06
Jacqueline M. Stone
Jacqueline M. Stone, Director
Technology Center 1700

This is a request for expedited examination of a design application under 37 CER 1.155.

NOTE: If the Request made by this form accompanies original application papers, include form PTO/SB/18 "Design Patent Application Transmittal" or its equivalent.

A preexamination search was conducted. The field of search was:

US. CL. D2/896, D2/897, D2/902, D2/907, D2/908, D2/910 D2/911, D2/912, D2/916, D2/922, D2/935, D2/969, D2/970, D2/971, D2/972, 36/45, 36/50.1, 36/83, 36/88, 36/89, 36/93, 36/101, 36/102, 36/103, 36/104, 36/106, 36/108, 36/109, 36/113, 36/114, 36/115, 36/116, 36/126, 36/127, 36/128, 36/129, 36/130

Related applications: _____

If not previously filed for the above-identified application, the following items required by 37 CFR 1.155 are enclosed:

- Formal drawings (see 37 CFR 1.84).
- The fee set forth in 37 CFR 1.17(k).
- An information disclosure statement in compliance with 37 CFR 1.98.

Signature — Date: 2 March 2006

Laurence B. Bond — Typed or printed name

30,549 — Registration Number, if applicable

(801) 532-1922 — Telephone Number

WARNING: Information on this form may become public. Credit card information should not be included on this form. Provide credit card information and authorization on PTO-2038.

This collection of information is required by37 CFR 1.155. The information is required to obtain or retain a benefit by the public which is to file (and by the USPTO to process) an application. Confidentiality is governed by 35 U.S.C. 122 and 37 CFR 1.11 and 1.14. This collection is estimated to take 6 minutes to complete, including gathering, preparing, and submitting the completed application form to the USPTO. Time will vary depending upon the individual case. Any comments on the amount of time you require to complete this form and/or suggestions for reducing this burden, should be sent to the Chief Information Officer, U.S. Patent and Trademark Office, U.S. Department of Commerce, P.O. Box 1450, Alexandria, VA 22313-1450. DO NOT SEND FEES OR COMPLETED FORMS TO THIS ADDRESS. SEND TO: Commissioner for Patents, P.O. Box 1450, Alexandria, VA 22343-1450.
If you need assistance in completing the form, call 1-800-PTO-9199 and select option 2.

03/09/2006 WABDELR1 00000009 29255265
01 FC:1802 900.00 OP

22713 U.S. PTO
030706

PTO/SB/27 (09-04)
Approved for use through 07/31/2006. OMB 0651-0031
U.S. Patent and Trademark Office; U.S DEPARTMENT OF COMMERCE
Under the Paperwork Reduction ACT of 1995, no persons are required to respond to collection of information unless it displays a valid OMB control number.

113000 U.S. PTO
29/255266
030706

REQUEST FOR EXPEDITED EXAMINATION OF A DESIGN APPLICATION (37 CFR 1.155)

Application Number	To be assigned
Filing Date	To be assigned
First Named Inventor	Benjamin Andrew Shaffer
Title	PORTION OF A SHOE UPPER
Attorney Docket Number	2465-7579US

ADDRESS TO:
MAIL STOP EXPEDITED DESIGN
COMMISSION FOR PATENTS
P.O. BOX 1450
Alexandria, VA 22313-1450

Approved 4-6-06
Jacqueline M. Stone
Jacqueline M. Stone, Director
Technology Center 1700

This is a request for expedited examination of a design application under 37 CER 1.155.

NOTE: If the Request made by this form accompanies original application papers, include form PTO/SB/18 "Design Patent Application Transmittal" or its equivalent.

A preexamination search was conducted. The field of search was:

US. CL. D2/896, D2/897, D2/902, D2/907, D2/908, D2/910 D2/911, D2/912, D2/916, D2/922, D2/935, D2/969, D2/970, D2/971, D2/972, 36/45, 36/50.1, 36/83, 36/88, 36/89, 36/93, 36/101, 36/102, 36/103, 36/104, 36/106, 36/108, 36/109, 36/113, 36/114, 36/115, 36/116, 36/126, 36/127, 36/128, 36/129, 36/130

Related applications: _____

If not previously filed for the above-identified application, the following items required by 37 CFR 1.155 are enclosed:

- Formal drawings (see 37 CFR 1.84).
- The fee set forth in 37 CFR 1.17(k).
- An information disclosure statement in compliance with 37 CFR 1.98.

Signature	2 March 2006 Date
Laurence B. Bond Typed or printed name	30,549 Registration Number, if applicable
(801) 532-1922 Telephone Number	

WARNING: Information on this form may become public. Credit card information should not be included on this form. Provide credit card information and authorization on PTO-2038.

This collection of information is required by37 CFR 1.155. The information is required to obtain or retain a benefit by the public which is to file (and by the USPTO to process) an application. Confidentiality is governed by 35 U.S.C. 122 and 37 CFR 1.11 and 1.14. This collection is estimated to take 6 minutes to complete, including gathering, preparing, and submitting the completed application form to the USPTO. Time will vary depending upon the individual case. Any comments on the amount of time you require to complete this form and/or suggestions for reducing this burden, should be sent to the Chief Information Officer, U.S. Patent and Trademark Office, U.S. Department of Commerce, P.O. Box 1450, Alexandria, VA 22313-1450. DO NOT SEND FEES OR COMPLETED FORMS TO THIS ADDRESS. SEND TO: Commissioner for Patents, P.O. Box 1450, Alexandria, VA 22343-1450.
If you need assistance in completing the form, call 1-800-PTO-9199 and select option 2.

03/09/2006 WABDELR1 00000010 29255266
01 FC:1802 900.00 OP

PTO/SB/27 (09-04)
Approved for use through 07/31/2006. OMB 0651-0031
U.S. Patent and Trademark Office; U.S DEPARTMENT OF COMMERCE
Under the Paperwork Reduction ACT of 1995, no persons are required to respond to collection of information unless it displays a valid OMB control number.

113800 U.S. PTO
29/255267
030706

REQUEST FOR EXPEDITED EXAMINATION OF A DESIGN APPLICATION (37 CFR 1.155)

Application Number	To be assigned
Filing Date	To be assigned
First Named Inventor	John Hlavacs
Title	PORTION OF A SHOE UPPER
Attorney Docket Number	2465-7602US

ADDRESS TO:
MAIL STOP EXPEDITED DESIGN
COMMISSION FOR PATENTS
P.O. BOX 1450
Alexandria, VA 22313-1450

Approved 4-6-06
Jacqueline M. Stone
Jacqueline M. Stone, Director
Technology Center 1700

This is a request for expedited examination of a design application under 37 CER 1.155.

NOTE: If the Request made by this form accompanies original application papers, include form PTO/SB/18 "Design Patent Application Transmittal" or its equivalent.

A preexamination search was conducted. The field of search was:

US. CL. D2/896, D2/897, D2/902, D2/907, D2/908, D2/910 D2/911, D2/912, D2/916, D2/922, D2/935, D2/969, D2/970, D2/971, D2/972, 36/45, 36/50.1, 36/83, 36/88, 36/89, 36/93, 36/101, 36/102, 36/103, 36/104, 36/106, 36/108, 36/109, 36/113, 36/114, 36/115, 36/116, 36/126, 36/127, 36/128, 36/129, 36/130

Related applications: _____

If not previously filed for the above-identified application, the following items required by 37 CFR 1.155 are enclosed:

- Formal drawings (see 37 CFR 1.84).
- The fee set forth in 37 CFR 1.17(k).
- An information disclosure statement in compliance with 37 CFR 1.98.

Signature — Date: 2 March 2006

Laurence B. Bond — Registration Number, if applicable: 30,549
Typed or printed name

(801) 532-1922
Telephone Number

WARNING: Information on this form may become public. Credit card information should not be included on this form. Provide credit card information and authorization on PTO-2038.

This collection of information is required by37 CFR 1.155. The information is required to obtain or retain a benefit by the public which is to file (and by the USPTO to process) an application. Confidentiality is governed by 35 U.S.C. 122 and 37 CFR 1.11 and 1.14. This collection is estimated to take 6 minutes to complete, including gathering, preparing, and submitting the completed application form to the USPTO. Time will vary depending upon the individual case. Any comments on the amount of time you require to complete this form and/or suggestions for reducing this burden, should be sent to the Chief Information Officer, U.S. Patent and Trademark Office, U.S. Department of Commerce, P.O. Box 1450, Alexandria, VA 22313-1450. DO NOT SEND FEES OR COMPLETED FORMS TO THIS ADDRESS. SEND TO: Commissioner for Patents, P.O. Box 1450, Alexandria, VA 22343-1450.
If you need assistance in completing the form, call 1-800-PTO-9199 and select option 2.

03/09/2006 WABDELR1 00000011 29255267
01 FC:1802 900.00 OP

UNITED STATES PATENT AND TRADEMARK OFFICE

Commissioner for Patents
United States Patent and Trademark Office
P.O. Box 1450
Alexandria, VA 22313-1450
www.uspto.gov

PATENT DEPARMENT – 53051
KILPATRICK STOCKTON LLP
1001 WES FOURTH STREET
WINSTON-SALEM NC 27101

COPY MAILED

MAY 09 2007

OFFICE OF PETITIONS

In re Application of
Kerah Cottrell Pelczarski, et al
Application No. 29/255,268
Filed: March 7, 2006
Attorney Docket No. 53051-321855

DECISION ON PETITION
TO WITHDRAW
FROM RECORD

This is a decision on the Request to Withdraw as attorney or agent of record under 37 C.F.R. § 1.36(b), filed February 21, 2007.

The request is **NOT APPROVED**.

The Office cannot approve the request at this time since the reason provided does not meet any of the conditions under the mandatory or permissive categories enumerated in 37 CFR 10.40. Section 10.40 of Title 37 of the Code of Federal Regulation states, "a practitioner shall not withdraw from employment in a proceeding before the Office without permission from the Office." More specifically, 37 CFR 10.40 states, "if paragraph (b) of this section is not applicable, a practitioner may not request permission to withdraw in matter pending before the Office unless such request or such withdrawal is" for one the permissive reasons listed in 37 CFR 10.40(c). The reason set forth in the request, transferring files to another law firm, does not meet any of the conditions set forth in 37 CFR 10.40.

There are no pending Office actions at the present time.

All future communications from the Office will continue to be directed to the above-listed address until otherwise notified by applicant.

Telephone inquiries concerning this decision should be directed to Diane Goodwyn at 571-272-6735.

April Wise
Petitions Examiner
Office of Petitions

cc: JOHN A. DRAGSETH, ESQ.
FISH & RICHARDSON P.C.
60 SOUTH SIXTH STREET,
SUITE 3300
MINNEAPOLIS MN 55402

UNITED STATES PATENT AND TRADEMARK OFFICE

Commissioner for Patents
United States Patent and Trademark Office
P.O. Box 1450
Alexandria, VA 22313-1450
www.uspto.gov
DIW May-07

JAMES E. CURRY
P.O. BOX 12516
LA CRESCENTA CA 91224

COPY MAILED

MAY 02 2007

OFFICE OF PETITIONS

In re Application of	:	
Roach et al.	:	
Application No. 29/255,278	:	ON PETITION
Filed: 7 March, 2006	:	
Attorney Docket No. JEC006	:	

This is a decision on the petition under 37 CFR 1.137(a), filed on 6 February, 2007, to revive the above-identified application.

The petition is **DISMISSED**.

Any request for reconsideration of this decision must be submitted within TWO (2) MONTHS from the mail date of this decision. Extensions of time under 37 CFR 1.136(a) are permitted. The reconsideration request should include a cover letter entitled "Renewed Petition under 37 CFR 1.137(a)" or "Renewed Petition under 37 CFR 1.137(b)." This is not a final agency decision.

This application became abandoned on 28 January, 2007, for failure to timely submit the issue fee in response to the Notice of Allowance and Fee(s) Due mailed on 27 October, 2006, which set a three (3) month statutory period for reply. The filing of the present petition precedes the mailing of Notice of Abandonment.

Petitioners assert, via their counsel:

> The issue fee was due 1-29-2007. Petitioner was scheduled for vacation between 1-16-2007 through 2-03-2007 where his office was to be closed. Petitioner

> submitted the issue fee with credit card payment form PTO-2038 on 1-11-2007, before the issue fee due date…
>
> While on vacation, the PTO was unable to process the credit card payment, and attempted to contact the Petitioner. Petitioner's office was closed and he could not be reached.
>
> Petitioner returned from vacation after the issue fee due date and then discovered the issue fee was not processed. The next working day, Petitioner inquired with the PTO and discovered that a typographical error had prevented the credit card payment form from being processed.
>
> …

A grantable petition to revive an abandoned application under 37 CFR 1.137(a) must be accompanied by:

> (1) the required reply, unless previously filed. In a nonprovisional application abandoned for failure to prosecute, the required reply may be met by the filing of a continuing application. In a nonprovisional application filed on or after June 8, 1995, and abandoned for failure to prosecute, the required reply may also be met by the filing of a request for continued examination in compliance with § 1.114. In an application or patent, abandoned or lapsed for failure to pay the issue fee or any portion thereof, the required reply must be the payment of the issue fee or any outstanding balance. In an application, abandoned for failure to pay the publication fee, the required reply must include payment of the publication fee;
>
> (2) the petition fee as set forth in § 1.17(l);
>
> (3) a showing to the satisfaction of the Commissioner that the entire delay in filing the required reply from the due date for the reply until the filing of a grantable petition pursuant to this paragraph was unavoidable; and
>
> (4) any terminal disclaimer (and fee as set forth in § 1.20(d)) required pursuant to paragraph (c) of this section.

This petition lacks item (3) above.

Decisions on reviving abandoned applications on the basis of "unavoidable" delay have adopted the reasonably prudent person standard in determining if the delay was unavoidable:

> The word 'unavoidable' . . . is applicable to ordinary human affairs, and requires no more or greater care or diligence than is generally used and observed by prudent and careful men in relation to their most important business. It permits them in the exercise of this care to rely upon the ordinary and trustworthy agencies of mail and telegraph, worthy and reliable employees, and such other means and instrumentalities as are usually employed in such important business. If unexpectedly, or through the unforeseen fault or imperfection of these agencies and instrumentalities, there occurs a failure, it may properly be said to be unavoidable, all other conditions of promptness in its rectification being present.[1]

The showing of record is inadequate to establish unavoidable delay within the meaning of 37 CFR 1.137(a). Specifically, an application is "unavoidably" abandoned only where petitioner, or counsel for petitioner, takes all action necessary for a proper response to the outstanding Office action, but through the intervention of unforeseen circumstances, such as failure or mail, telegraph, telefacsimile, or the negligence of otherwise reliable employees, the response is not timely received in the Office.[2]

With regard to period (1), above, a delay resulting from an error (*e.g.*, a docketing error) on the part of an employee in the performance of a clerical function may provide the basis for a showing of "unavoidable" delay, provided it is shown that:

(1) the error was the cause of the delay at issue;

(2) there was in place a business routine for performing the clerical function that could reasonably be relied upon to avoid errors in its performance;

---

[1] In re Mattullath, 38 App. D.C. 497, 514-15 (1912)(quoting Ex parte Pratt, 1887 Dec. Comm'r Pat. 31, 32-33 (1887)); see also Winkler v. Ladd, 221 F. Supp. 550, 552, 138 USPQ 666, 167-68 (D.D.C. 1963), aff'd, 143 USPQ 172 (D.C. Cir. 1963); Ex parte Henrich, 1913 Dec. Comm'r Pat. 139, 141 (1913). In addition, decisions on revival are made on a "case-by-case basis, taking all the facts and circumstances into account."

[2] Ex parte Pratt, 1887 Dec. Comm'r Pat. 31 (Comm'r Pat. 1887).

(3) and the employee was sufficiently trained and experienced with regard to the function and routine for its performance that reliance upon such employee represented the exercise of due care.[3]

An adequate showing requires:

(A) Statements by all persons with direct knowledge of the circumstances surrounding the delay, setting forth the facts as they know them.

(B) Petitioner must supply a thorough explanation of the docketing and call-up system in use and must identify the type of records kept and the person responsible for the maintenance of the system. This showing must include copies of mail ledgers, docket sheets, filewrappers and such other records as may exist which would substantiate an error in docketing, and include an indication as to why the system failed to provide adequate notice that a reply was due.

(C) Petitioner must supply information regarding the training provided to the personnel responsible for the error, degree of supervision of their work, examples of other work functions carried out, and checks on the described work which were used to assure proper execution of assigned tasks.

The present petition lacks the showing required by (1), (2), and (3) above.

At the outset, petitioner must explain whether the credit card form containing the typographical error was completed by an employee of counsel, or by petitioner's registered patent attorney himself. It appears, based on a reading of the petition, that counsel completed the credit card form himself. However, if counsel's employee completed the credit card form, and the error which led to the delay arose from the acts or omissions of counsel's employee, petitioner must provide a statement from said legal assistant, explaining the circumstances surrounding the error and why the error occurred: petitioners must provide statements from any of the persons with direct knowledge of the circumstances surrounding the delay, setting forth the facts as they know them.

---

[3] See MPEP 711.03(c)(III)(C)(2).

Further, if the error was made by a clerical employee of counsel, petitioners must supply information regarding the training provided to the personnel responsible for the clerical error, a showing of the steps in place to ensure work was properly completed, degree of supervision of their work, examples of other work functions carried out, and checks on the described work which were used to assure proper execution of assigned tasks.

In summary, insufficient evidence has been proffered to show that the error in this case is a clerical error by a reliable and trusted employee.

On the other hand, if the typographical error which led to the inability to process the credit card payment was made by counsel himself, such error would not be considered a clerical error, but rather a mistake on the part of counsel.

The U.S. Patent and Trademark Office must rely on the actions or inactions of duly authorized and voluntarily chosen representatives of the applicant, and applicant is bound by the consequences of those actions or inactions.[4] Specifically, petitioner's delay caused by the mistakes or negligence of his voluntarily chosen representative does not constitute unavoidable delay within the meaning of 35 U.S.C. § 133.[5]

A delay resulting from the lack of knowledge or improper application of the patent statute, rules of practice or the MPEP does not constitute an "unavoidable" delay.[6] A delay caused by an applicant's lack of knowledge or improper application of the patent statute, rules of practice or the MPEP is not rendered "unavoidable" due to: (1) the applicant's reliance upon oral advice from Office employees; or (2) the Office's failure to advise the applicant of any deficiency in sufficient time to permit the applicant to take corrective action.[7]

---

[4] Link v. Wabash, 370 U.S. 626, 633-34 (1962).

[5] Haines v. Quigg, 673 F. Supp. 314, 316-17, 5 USPQ2d 1130, 1131-32 (N. D. Ind. 1987); Smith v. Diamond, 209 USPQ 1091 (D.D.C. 1981); Potter v. Dann, 201 USPQ 574 (D.D.C. 1978); Ex parte Murray, 1891 Dec. Comm'r Pat. 130, 131 (Comm'r Pat. 1891).

[6] Id.

[7] See In re Sivertz, 227 USPQ 255, 256 (Comm'r Pat. 1985); see also In re Colombo, Inc., 33 USPQ2d 1530, 1532 (Comm'r Pat. 1994)(while the Office attempts to notify applicants of deficiencies in their responses in a manner permitting a timely correction, the Office has no obligation to notify parties of deficiencies in their responses in a manner permitting a timely correction).

As the showing presented is insufficient to establish unavoidable delay within the meaning of 35 U.S.C. § 133 and 37 CFR 1.137(a). Thus, the petition will be dismissed.

ALTERNATIVE VENUE

Petitioner may wish to consider filing a renewed petition under 37 CFR 1.137(b),[8] which now provides that where the delay in reply was unintentional, a petition may be filed to revive an abandoned application or a lapsed patent pursuant to 37 CFR 1.137(b).

The filing of a petition under the unintentional standard cannot be intentionally delayed and therefore should be filed promptly. A person seeking revival due to unintentional delay cannot make a statement that the delay was unintentional unless the entire delay, including the delay from the date it was discovered that the application was abandoned until the filing of the petition to revive under 37 CFR 1.137(b), was unintentional. A statement that the delay was unintentional is not appropriate if petitioner intentionally delayed the filing of a petition for revival under 37 CFR 1.137(b).

A copy of the form for filing a petition under 37 CFR 1.137(b) to revive an application unintentionally abandoned is enclosed herewith for petitioner's convenience.

---

[8] Effective December 1, 1997, the provisions of 37 CFR 1.137(b) now provide that where the delay in reply was unintentional, a petition may be filed to revive an abandoned application or a lapsed patent pursuant to 37 CFR 1.137(b). A grantable petition filed under the provisions of 37 CFR 1.137(b) must be accompanied by:

(1) the required reply, unless previously filed. In a nonprovisional application abandoned for failure to prosecute, the required reply may be met by the filing of a continuing application. In a nonprovisional utility or plant application filed on or after June 8, 1995, and abandoned for failure to prosecute, the required reply may also be met by the filing of a request for continued examination in compliance with § 1.114. In an application or patent, abandoned or lapsed for failure to pay the issue fee or any portion thereof, the required reply must be the payment of the issue fee or any outstanding balance thereof.

(2) the petition fee as set forth in 37 CFR 1.17(m);

(3) a statement that the entire delay in filing the required reply from the due date for the reply until the filing of a grantable petition pursuant to 37 CFR 1.137(b) was unintentional. The Commissioner may required additional information where there is a question whether the delay was unintentional; and

(4) any terminal disclaimer (and fee as set forth in 37 CFR 1.20(d)) required pursuant to 37 CFR 1.137(c)).

Further correspondence with respect to this matter should be addressed as follows:

By mail: Mail Stop Petition
Commissioner for Patents
P.O. Box 1450
Alexandria, VA 22313-1450

By FAX: (571) 273-8300
Attn: Office of Petitions

By hand: Customer Service Window
Mail Stop Petition
401 Dulany Street
Alexandria, VA 22314

Telephone inquiries related to this decision should be directed to the undersigned at 571-272-3231.

DWood

Douglas I. Wood
Senior Petitions Attorney
Office of Petitions

Encl: PTO/SB/64
Privacy Act Statement

PTO/SB/64 (04-07)
Approved for use through 09/30/2007. OMB 0651-0031
U.S. Patent and Trademark Office; U.S. DEPARTMENT OF COMMERCE
Under the Paperwork Reduction Act of 1995, no persons are required to respond to a collection of information unless it displays a valid OMB control number.

PETITION FOR REVIVAL OF AN APPLICATION FOR PATENT ABANDONED UNINTENTIONALLY UNDER 37 CFR 1.137(b)

Docket Number (Optional)

First named inventor:

Application No.: Art Unit:

Filed: Examiner:

Title:

Attention: Office of Petitions
Mail Stop Petition
Commissioner for Patents
P.O. Box 1450
Alexandria, VA 22313-1450
FAX (571) 273-8300

NOTE: If information or assistance is needed in completing this form, please contact Petitions Information at (571) 272-3282.

The above-identified application became abandoned for failure to file a timely and proper reply to a notice or action by the United States Patent and Trademark Office. The date of abandonment is the day after the expiration date of the period set for reply in the office notice or action plus an extensions of time actually obtained.

APPLICANT HEREBY PETITIONS FOR REVIVAL OF THIS APPLICATION

NOTE: A grantable petition requires the following items:
(1) Petition fee;
(2) Reply and/or issue fee;
(3) Terminal disclaimer with disclaimer fee - required for all utility and plant applications filed before June 8, 1995; and for all design applications; and
(4) Statement that the entire delay was unintentional.

1. Petition fee

☐ Small entity-fee $ _____ (37 CFR 1.17(m)). Applicant claims small entity status. See 37 CFR 1.27.

☐ Other than small entity – fee $ _____ (37 CFR 1.17(m))

2. Reply and/or fee

A. The reply and/or fee to the above-noted Office action in the form of _____(identify type of reply):

☐ has been filed previously on _____.
☐ is enclosed herewith.

B. The issue fee and publication fee (if applicable) of $ _____.

☐ has been paid previously on _____.
☐ is enclosed herewith.

This collection of information is required by 37 CFR 1.137(b). The information is required to obtain or retain a benefit by the public which is to file (and by the USPTO to process) an application. Confidentiality is governed by 35 U.S.C. 122 and 37 CFR 1.11 and 1.14. This collection is estimated to take 1.0 hour to complete, including gathering, preparing, and submitting the completed application form to the USPTO. Time will vary depending upon the individual case. Any comments on the amount of time you require to complete this form and/or suggestions for reducing this burden, should be sent to the Chief Information Officer, U.S. Patent and Trademark Office, U.S. Department of Commerce, P.O. Box 1450, Alexandria, VA 22313-1450. DO NOT SEND FEES OR COMPLETED FORMS TO THIS ADDRESS. **SEND TO: Mail Stop Petition, Commissioner for Patents, P.O. Box 1450, Alexandria, VA 22313-1450.**

If you need assistance in completing the form, call 1-800-PTO-9199 and select option 2.

Under the Paperwork Reduction Act of 1995, no persons are required to respond to a collection of information unless it displays a valid OMB control number.

3. Terminal disclaimer with disclaimer fee

☐ Since this utility/plant application was filed on or after June 8, 1995, no terminal disclaimer is required.

☐ A terminal disclaimer (and disclaimer fee (37 CFR 1.20(d)) of $ _____ for a small entity or $ _____ for other than a small entity) disclaiming the required period of time is enclosed herewith (see PTO/SB/63).

4. STATEMENT: The entire delay in filing the required reply from the due date for the required reply until the filing of a grantable petition under 37 CFR 1.137(b) was unintentional. [NOTE: The United States Patent and Trademark Office may require additional information if there is a question as to whether either the abandonment or the delay in filing a petition under 37 CFR 1.137(b) was unintentional (MPEP 711.03(c), subsections (III)(C) and (D)).]

WARNING:

Petitioner/applicant is cautioned to avoid submitting personal information in documents filed in a patent application that may contribute to identity theft. Personal information such as social security numbers, bank account numbers, or credit card numbers (other than a check or credit card authorization form PTO-2038 submitted for payment purposes) is never required by the USPTO to support a petition or an application. If this type of personal information is included in documents submitted to the USPTO, petitioners/applicants should consider redacting such personal information from the documents before submitting them to the USPTO. Petitioner/applicant is advised that the record of a patent application is available to the public after publication of the application (unless a non-publication request in compliance with 37 CFR 1.213(a) is made in the application) or issuance of a patent. Furthermore, the record from an abandoned application may also be available to the public if the application is referenced in a published application or an issued patent (see 37 CFR 1.14). Checks and credit card authorization forms PTO-2038 submitted for payment purposes are not retained in the application file and therefore are not publicly available.

Signature	Date
Typed or printed name	Registration Number, if applicable
Address	Telephone Number
Address	

Enclosures: ☐ Fee Payment

☐ Reply

☐ Terminal Disclaimer Form

☐ Additional sheets containing statements establishing unintentional delay

☐ Other: _____

CERTIFICATE OF MAILING OR TRANSMISSION [37 CFR 1.8(a)]

I hereby certify that this correspondence is being:

☐ Deposited with the United States Postal Service on the date shown below with sufficient postage as first class mail in an envelope addressed to: Mail Stop Petition, Commissioner for Patents, P. O. Box 1450, Alexandria, VA 22313-1450.

☐ Transmitted by facsimile on the date shown below to the United States Patent and Trademark Office at (571) 273-8300.

Date	Signature
	Typed or printed name of person signing certificate

Privacy Act Statement

The **Privacy Act of 1974 (P.L. 93-579)** requires that you be given certain information in connection with your submission of the attached form related to a patent application or patent. Accordingly, pursuant to the requirements of the Act, please be advised that: (1) the general authority for the collection of this information is 35 U.S.C. 2(b)(2); (2) furnishing of the information solicited is voluntary; and (3) the principal purpose for which the information is used by the U.S. Patent and Trademark Office is to process and/or examine your submission related to a patent application or patent. If you do not furnish the requested information, the U.S. Patent and Trademark Office may not be able to process and/or examine your submission, which may result in termination of proceedings or abandonment of the application or expiration of the patent.

The information provided by you in this form will be subject to the following routine uses:

1. The information on this form will be treated confidentially to the extent allowed under the Freedom of Information Act (5 U.S.C. 552) and the Privacy Act (5 U.S.C 552a). Records from this system of records may be disclosed to the Department of Justice to determine whether disclosure of these records is required by the Freedom of Information Act.
2. A record from this system of records may be disclosed, as a routine use, in the course of presenting evidence to a court, magistrate, or administrative tribunal, including disclosures to opposing counsel in the course of settlement negotiations.
3. A record in this system of records may be disclosed, as a routine use, to a Member of Congress submitting a request involving an individual, to whom the record pertains, when the individual has requested assistance from the Member with respect to the subject matter of the record.
4. A record in this system of records may be disclosed, as a routine use, to a contractor of the Agency having need for the information in order to perform a contract. Recipients of information shall be required to comply with the requirements of the Privacy Act of 1974, as amended, pursuant to 5 U.S.C. 552a(m).
5. A record related to an International Application filed under the Patent Cooperation Treaty in this system of records may be disclosed, as a routine use, to the International Bureau of the World Intellectual Property Organization, pursuant to the Patent Cooperation Treaty.
6. A record in this system of records may be disclosed, as a routine use, to another federal agency for purposes of National Security review (35 U.S.C. 181) and for review pursuant to the Atomic Energy Act (42 U.S.C. 218(c)).
7. A record from this system of records may be disclosed, as a routine use, to the Administrator, General Services, or his/her designee, during an inspection of records conducted by GSA as part of that agency's responsibility to recommend improvements in records management practices and programs, under authority of 44 U.S.C. 2904 and 2906. Such disclosure shall be made in accordance with the GSA regulations governing inspection of records for this purpose, and any other relevant (*i.e.*, GSA or Commerce) directive. Such disclosure shall not be used to make determinations about individuals.
8. A record from this system of records may be disclosed, as a routine use, to the public after either publication of the application pursuant to 35 U.S.C. 122(b) or issuance of a patent pursuant to 35 U.S.C. 151. Further, a record may be disclosed, subject to the limitations of 37 CFR 1.14, as a routine use, to the public if the record was filed in an application which became abandoned or in which the proceedings were terminated and which application is referenced by either a published application, an application open to public inspection or an issued patent.
9. A record from this system of records may be disclosed, as a routine use, to a Federal, State, or local law enforcement agency, if the USPTO becomes aware of a violation or potential violation of law or regulation.

UNITED STATES PATENT AND TRADEMARK OFFICE

Commissioner for Patents
United States Patent and Trademark Office
P.O. Box 1450
Alexandria, VA 22313-1450
www.uspto.gov
DIW Jul-07

JAMES E. CURRY
P.O. BOX 12516
LA CRESCENTA CA 91224

COPY MAILED

JUL 11 2007

OFFICE OF PETITIONS

In re Application of	:	
Roach et al.	:	LETTER DISMISSING
Application No. 29/255,278	:	PETITION
Filed: 7 March, 2006	:	
Attorney Docket No. JEC006	:	

This is a decision on the petition under 37 CFR 1.137(b),[1] filed on 9 May, 2007, to revive the above-identified application.

The petition is **DISMISSED** for the reason stated below.

Any request for reconsideration of this decision must be submitted within TWO (2) MONTHS from the mail date of this decision. Extensions of time under 37 CFR 1.136(a) are permitted. The reconsideration request should include a cover letter entitled "Renewed Petition Under 37 CFR 1.137(b)." This is not a final agency decision.

---

[1] Effective December 1, 1997, the provisions of 37 CFR 1.137(b) now provide that where the delay in reply was unintentional, a petition may be filed to revive an abandoned application or a lapsed patent pursuant to 37 CFR 1.137(b). A grantable petition filed under the provisions of 37 CFR 1.137(b) must be accompanied by:

(1) the required reply, unless previously filed. In a nonprovisional application abandoned for failure to prosecute, the required reply may be met by the filing of a continuing application. In a nonprovisional utility or plant application filed on or after June 8, 1995, and abandoned for failure to prosecute, the required reply may also be met by the filing of a request for continued examination in compliance with § 1.114. In an application or patent, abandoned or lapsed for failure to pay the issue fee or any portion thereof, the required reply must be the payment of the issue fee or any outstanding balance thereof.

(2) the petition fee as set forth in 37 CFR 1.17(m);

(3) a statement that the entire delay in filing the required reply from the due date for the reply until the filing of a grantable petition pursuant to 37 CFR 1.137(b) was unintentional. The Commissioner may required additional information where there is a question whether the delay was unintentional; and

(4) any terminal disclaimer (and fee as set forth in 37 CFR 1.20(d)) required pursuant to 37 CFR 1.137(c)).

This application became abandoned on 28 January, 2007, for failure to timely submit the issue fee in response to the Notice of Allowance and Fee(s) Due mailed on 27 October, 2006, which set a three (3) month statutory period for reply. The filing of the present petition precedes the mailing of Notice of Abandonment. The petition under 37 CFR 1.137(a) filed on 6 February, 2007, was dismissed on 2 May, 2007.

The petition must be dismissed because the proper amount due for the petition fee has not been paid. A review of Office financial records reveals that $400.00 was submitted with the present petition. The small entity fee due for a petition under 37 CFR 1.137(b) is currently $750.00.

The USPTO will not reach the merits of any petition under 37 CFR 1.137 lacking the requisite petition fee.[2]

Petitioner should submit the balance due of $350.00 with a renewed petition.

Further correspondence with respect to this matter should be addressed as follows:

By mail: Mail Stop Petition
Commissioner for Patents
P.O. Box 1450
Alexandria, VA 22313-1450

By FAX: (571)273-8300
Attn: Office of Petitions

By hand: Customer Service Window
Mail Stop Petition
Randolph Building
401 Dulany Street
Alexandria, VA 22314

Telephone inquiries related to this decision should be directed to the undersigned at 571-272-3231.

D Wood

Douglas I. Wood
Senior Petitions Attorney
Office of Petitions

---

[2] See Krahn v. Comm'r, 15 USPQ2d 1823, 1825 (E.D. Va. 1990).

UNITED STATES PATENT AND TRADEMARK OFFICE

Commissioner for Patents
United States Patent and Trademark Office
P.O. Box 1450
Alexandria, VA 22313-1450
www.uspto.gov
DIW Dec-07

JAMES E. CURRY
P.O. BOX 12516
LA CRESCENTA CA 91224

COPY MAILED

DEC 21 2007

OFFICE OF PETITIONS

In re Application of :
Roach et al. :
Application Number: 29/255278 : DECISION ON PETITION
Filing Date: 03/07/2006 :
Attorney Docket Number: JEC006 :

This is a decision on the petition filed on December 5, 2007, under 37 CFR 1.137(b),[1] to revive the above-identified application.

The petition is **GRANTED**.

The application became abandoned on January 28, 2007, for failure to timely submit the issue fee in response to the Notice of Allowance and Fee(s) Due mailed on October 27, 2006. Notice of Abandonment was mailed on May 4, 2007. On February 6, 2007, a petition under 37 CFR 1.137(a) was filed. On May 2, 2007, the petition was dismissed. On May 9, 2007, a letter styled as a petition under 37 CFR 1.137(b) was filed. On July 11, 2007, the petition was dismissed because the proper fee was not received.

---

[1] Effective December 1, 1997, the provisions of 37 CFR 1.137(b) now provide that where the delay in reply was unintentional, a petition may be filed to revive an abandoned application or a lapsed patent pursuant to 37 CFR 1.137(b). A grantable petition filed under the provisions of 37 CFR 1.137(b) must be accompanied by:

(1) the required reply, unless previously filed. In a nonprovisional application abandoned for failure to prosecute, the required reply may be met by the filing of a continuing application. In a nonprovisional utility or plant application filed on or after June 8, 1995, and abandoned for failure to prosecute, the required reply may also be met by the filing of a request for continuing examination in compliance with § 1.114. In an application or patent, abandoned or lapsed for failure to pay the issue fee or any portion thereof, the required reply must be the payment of the issue fee or any outstanding balance thereof. In an application abandoned for failure to pay the publication fee, the required reply must include payment of the publication fee.

(2) the petition fee as set forth in 37 CFR 1.17(m);

(3) a statement that the entire delay in filing the required reply from the due date for the reply until the filing of a grantable petition pursuant to 37 CFR 1.137(b) was unintentional. The Commissioner may required additional information where there is a question whether the delay was unintentional; and

(4) any terminal disclaimer (and fee as set forth in 37 CFR 1.20(d)) required pursuant to 37 CFR 1.137(c)).

The subject petition was filed on December 5, 2007.[2]

The terminal disclaimer filed on February 6, 2007, under 37 CFR 1.137(c) has been entered and made of record. Effective September 8, 2000, 37 CFR 1.137(c)(1) has been added to state that a terminal disclaimer filed pursuant to this rule must dedicate to the public a terminal part of the term of any patent granted thereon equivalent to the lesser of: 1) the period of abandonment of the application; or 2) the period extending beyond twenty years from the date on which the application for patent was filed in the United States, or, if the application contains a specific reference to an earlier filed application(s) under 35 U.S.C. 120, 121, or 365(c).[3] Accordingly, the period of the terminal disclaimer filed on February 6, 2007, will be equivalent to the lesser period (1) or (2), as noted above, for this application.

Receipt of the issue fee is acknowledged.

The application is being referred to the Office of Patent Publication for processing into a patent.

Telephone inquiries concerning this matter may be directed to the undersigned at (571)272-3231.

D Wood

Douglas I. Wood
Senior Petitions Attorney
Office of Petitions

---

[2] Although the decision mailed on July 11, 2007, set a two (2) month shortened period for reply, the USPTO will not reach the merits of any petition under 37 CFR 1.137 lacking the requisite petition fee. Under 37 CFR 1.181(f), any petition under this part not filed within two months of the mailing date of the action or notice from which relief is requested *may* be dismissed as untimely, except as otherwise provided. Under the circumstances of this case, in view of the Auto-Reply Facsimile Transmission sheet showing receipt in the office of a reply on August 7, 2007, the subject petition is considered to be timely filed. The balance due of the petition fee was submitted on December 13, 2007.

[3] 65 Fed. Reg. 54,674 (2000).

UNITED STATES PATENT AND TRADEMARK OFFICE

Commissioner for Patents
United States Patent and Trademark Office
P.O. Box 1450
Alexandria, VA 22313-1450
www.uspto.gov

LADAS & PARRY
26 WEST 61ST STREET
NEW YORK NY 10023

COPY MAILED

FEB 16 2007

OFFICE OF PETITIONS

In re Application of :
Hsien-Chung Tuanmu :
Application No. 29/255,279 : ON PETITION
Filed: March 7, 2006 :
Attorney Docket No. UD 051641-7 :

This is a decision on the petition, filed February 16, 2007, under 37 CFR 1.313(c)(3) to withdraw the above-identified application from issue after payment of the issue fee.

The petition is **GRANTED**.

The above-identified application is withdrawn from issue in favor of a continued prosecution application (CPA) under 37 CFR 1.53(d).

Petitioner is advised that the issue fee paid on September 29, 2006 in the parent application is not refundable nor can it be applied towards any new Notice of Allowance which may issue on the CPA filed February 16, 2007.

Telephone inquiries should be directed to the undersigned at (571) 272-3208.

This matter is being referred to Technology Center AU 2915 for processing of the CPA.

Karen Creasy

Karen Creasy
Petitions Examiner
Office of Petitions

UNITED STATES PATENT AND TRADEMARK OFFICE

Commissioner for Patents
United States Patent and Trademark Office
P.O. Box 1450
Alexandria, VA 22313-1450
www.uspto.gov

CHARLES E. BAXLEY, ESQ.
90 JOHN STREET
THIRD FLOOR
NEW YORK, NY 10038

COPY MAILED

JAN 16 2008

OFFICE OF PETITIONS

In re Application of Liao :
Application No. 29/255,312 : Decision on Petition
Filing Date: March 7, 2006 :
Attorney Docket No. 16636 B :

This is a decision on the petition under 37 CFR 1.181, filed September 21, 2007, to withdraw the holding of abandonment.

The petition is **granted.**

This application was held abandoned for failure to timely respond to the Notice of Allowability mailed April 6, 2007, which set a three (3) month shortened statutory period for reply. Accordingly, a reply was due on or before July 6, 2007.

Petitioner states that a timely reply, in the form of corrected drawings, was timely mailed on June 20, 2007. Petitioner has submitted a copy of the previously mailed correspondence including a cover sheet bearing a certificate of mailing dated June 20, 2007, which is on or before the due date of July 6, 2007.

One may prove the timely filing of papers by providing a showing in compliance with 37 CFR 1.8(b).

37 CFR 1.8(b) states,

> In the event that correspondence is considered timely filed by being mailed or transmitted in accordance with paragraph (a) of this section, but not received in the U.S. Patent and Trademark Office after a reasonable amount of time has elapsed from the time of mailing or transmitting of the correspondence, or after the application is held to be abandoned, or after the proceeding is dismissed, terminated, or decided with prejudice, the correspondence will be considered timely if the party who forwarded such correspondence:
>
> (1) Informs the Office of the previous mailing or transmission of the correspondence promptly after becoming aware that the Office has no evidence of receipt of the correspondence;

(2) Supplies an additional copy of the previously mailed or transmitted correspondence and certificate; and

(3) Includes a statement which attests on a personal knowledge basis or to the satisfaction of the Director to the previous timely mailing or transmission. If the correspondence was sent by facsimile transmission, a copy of the sending unit's report confirming transmission may be used to support this statement.

The petition satisfies the above requirements of 37 CFR 1.8(b). Accordingly, the holding of abandonment for failure to timely file a reply to the Notice of Allowability is hereby withdrawn and the application restored to pending status.

The copy of the drawings filed September 21, 2007, will be treated as timely filed.

The Office of Data Management will be informed of the instant decision and will take steps to issue the application as a patent in due course.

Telephone inquiries regarding this communication should be directed to Petitions Attorney Steven Brantley at (571) 272-3203.

Charles Steven Brantley
Senior Petitions Attorney
Office of Petitions

UNITED STATES PATENT AND TRADEMARK OFFICE

UNITED STATES DEPARTMENT OF COMMERCE
United States Patent and Trademark Office
Address: COMMISSIONER FOR PATENTS
P.O. Box 1450
Alexandria, Virginia 22313-1450
www.uspto.gov

APPL NO.	FILING OR 371 (c) DATE	ART UNIT	FIL FEE REC'D	ATTY.DOCKET NO	DRAWINGS	TOT CLMS	IND CLMS
29/255,315	03/07/2006	2913	215	1401-40-DE	6	1	1

CONFIRMATION NO. 1903

CORRECTED FILING RECEIPT

OC000000018636343

Gerald K. White, Esq.
GERALD K. WHITE & ASSOCIATES, P.C.
Suite 835
205 W. Randolph Street
Chicago, IL 60606

Date Mailed: 04/27/2006

Receipt is acknowledged of this regular Patent Application. It will be considered in its order and you will be notified as to the results of the examination. Be sure to provide the U.S. APPLICATION NUMBER, FILING DATE, NAME OF APPLICANT, and TITLE OF INVENTION when inquiring about this application. Fees transmitted by check or draft are subject to collection. Please verify the accuracy of the data presented on this receipt. **If an error is noted on this Filing Receipt, please mail to the Commissioner for Patents P.O. Box 1450 Alexandria Va 22313-1450. Please provide a copy of this Filing Receipt with the changes noted thereon. If you received a "Notice to File Missing Parts" for this application, please submit any corrections to this Filing Receipt with your reply to the Notice. When the USPTO processes the reply to the Notice, the USPTO will generate another Filing Receipt incorporating the requested corrections (if appropriate).**

Applicant(s)

Stacey Lynn Zall, Evanston, IL;

Power of Attorney:

Gerald White--26611

Domestic Priority data as claimed by applicant

Foreign Applications

If Required, Foreign Filing License Granted: 03/30/2006

The country code and number of your priority application, to be used for filing abroad under the Paris Convention, is US29/255,315

Projected Publication Date: None, application is not eligible for pre-grant publication

Non-Publication Request: No

Early Publication Request: No

**** SMALL ENTITY ****

Title

Frog bath puff

Preliminary Class

D28

PROTECTING YOUR INVENTION OUTSIDE THE UNITED STATES

Since the rights granted by a U.S. patent extend only throughout the territory of the United States and have no effect in a foreign country, an inventor who wishes patent protection in another country must apply for a patent in a specific country or in regional patent offices. Applicants may wish to consider the filing of an international application under the Patent Cooperation Treaty (PCT). An international (PCT) application generally has the same effect as a regular national patent application in each PCT-member country. The PCT process **simplifies** the filing of patent applications on the same invention in member countries, but **does not result** in a grant of "an international patent" and does not eliminate the need of applicants to file additional documents and fees in countries where patent protection is desired.

Almost every country has its own patent law, and a person desiring a patent in a particular country must make an application for patent in that country in accordance with its particular laws. Since the laws of many countries differ in various respects from the patent law of the United States, applicants are advised to seek guidance from specific foreign countries to ensure that patent rights are not lost prematurely.

Applicants also are advised that in the case of inventions made in the United States, the Director of the USPTO must issue a license before applicants can apply for a patent in a foreign country. The filing of a U.S. patent application serves as a request for a foreign filing license. The application's filing receipt contains further information and guidance as to the status of applicant's license for foreign filing.

Applicants may wish to consult the USPTO booklet, "General Information Concerning Patents" (specifically, the section entitled "Treaties and Foreign Patents") for more information on timeframes and deadlines for filing foreign patent applications. The guide is available either by contacting the USPTO Contact Center at 800-786-9199, or it can be viewed on the USPTO website at http://www.uspto.gov/web/offices/pac/doc/general/index.html.

For information on preventing theft of your intellectual property (patents, trademarks and copyrights), you may wish to consult the U.S. Government website, http://www.stopfakes.gov. Part of a Department of Commerce initiative, this website includes self-help "toolkits" giving innovators guidance on how to protect intellectual property in specific countries such as China, Korea and Mexico. For questions regarding patent enforcement issues, applicants may call the U.S. Government hotline at 1-866-999-HALT (1-866-999-4158).

LICENSE FOR FOREIGN FILING UNDER
Title 35, United States Code, Section 184
Title 37, Code of Federal Regulations, 5.11 & 5.15

GRANTED

The applicant has been granted a license under 35 U.S.C. 184, if the phrase "IF REQUIRED, FOREIGN FILING LICENSE GRANTED" followed by a date appears on this form. Such licenses are issued in all applications where the conditions for issuance of a license have been met, regardless of whether or not a license may be required as set forth in 37 CFR 5.15. The scope and limitations of this license are set forth in 37 CFR 5.15(a) unless an earlier license has been issued under 37 CFR 5.15(b). The license is subject to revocation upon written notification. The date indicated is the effective date of the license, unless an earlier license of similar scope has been granted under 37 CFR 5.13 or 5.14.

This license is to be retained by the licensee and may be used at any time on or after the effective date thereof

unless it is revoked. This license is automatically transferred to any related applications(s) filed under 37 CFR 1.53(d). This license is not retroactive.

The grant of a license does not in any way lessen the responsibility of a licensee for the security of the subject matter as imposed by any Government contract or the provisions of existing laws relating to espionage and the national security or the export of technical data. Licensees should apprise themselves of current regulations especially with respect to certain countries, of other agencies, particularly the Office of Defense Trade Controls, Department of State (with respect to Arms, Munitions and Implements of War (22 CFR 121-128)); the Bureau of Industry and Security, Department of Commerce (15 CFR parts 730-774); the Office of Foreign Assets Control, Department of Treasury (31 CFR Parts 500+) and the Department of Energy.

NOT GRANTED

No license under 35 U.S.C. 184 has been granted at this time, if the phrase "IF REQUIRED, FOREIGN FILING LICENSE GRANTED" DOES NOT appear on this form. Applicant may still petition for a license under 37 CFR 5.12, if a license is desired before the expiration of 6 months from the filing date of the application. If 6 months has lapsed from the filing date of this application and the licensee has not received any indication of a secrecy order under 35 U.S.C. 181, the licensee may foreign file the application pursuant to 37 CFR 5.15(b).

UNITED STATES PATENT AND TRADEMARK OFFICE

Commissioner for Patents
United States Patent and Trademark Office
P.O. Box 1450
Alexandria, VA 22313-1450
www.uspto.gov

COPY MAILED

DEC 3 1 2009

OFFICE OF PETITIONS

TODD N. HATHAWAY
119 N. COMMERCIAL ST. #620
BELLINGHAM WA 98225

In re Patent No. D556361	:	
Issue Date: November 27, 2007	:	
Application No. 29/255,321	:	ON PETITION
Filed: March 7, 2006	:	
Attorney Docket No. P06006	:	

This is a decision on the petition filed February 8, 2008, which is being treated as a request under 37 CFR 3.81(b)[1], that the above-identified patent be corrected to state the name of the assignee on the front page of the above-identified patent by way of a Certificate of Correction.

The request is **GRANTED**.

Telephone inquiries concerning this decision may be directed to the undersigned at (571) 272-3208. Inquiries regarding the issuance of a certificate of correction should be directed to the Certificate of Correction Branch at (571) 272-4200.

The Certificates of Correction Branch will be notified of this decision granting the petition under 37 CFR 3.81(b) and directing issuance of the requested Certificate of Correction.

/KOC/
Karen Creasy
Petitions Examiner
Office of Petitions

---

[1] *See* MPEP 1309, subsection II; and Official Gazette of June 22, 2004.

PTO/SB/27 (05-03)
Approved for use through 04/30/2003. OMB 0651-0031
U.S. Patent and Trademark Office; U.S. DEPARTMENT OF COMMERCE
Under the Paperwork Reduction Act of 1995, no persons are required to respond to a collection of information unless it displays a valid OMB control number.

REQUEST FOR EXPEDITED EXAMINATION OF A DESIGN APPLICATION (37 CFR 1.155)

Application Number	TO BE ASSIGNED
Filing Date	March 8, 2006
First Named Inventor	Carl L. Madore
Title	Portion Of A Golf Club Head
Atty Docket Number	015127.00701

113006 U.S. PTO
29/255381
030806

HAND DELIVER TO THE DESIGN GROUP DIRECTOR'S OFFICE
-or- ADDRESS TO:
MAIL STOP EXPEDITED DESIGN
COMMISSIONER FOR PATENTS
P.O. Box 1450
Alexandria, VA 22313-1450

This is a request for expedited examination of a design application under 37 CFR 1.155.

NOTE: If the Request made by this form accompanies original application papers, include form PTO/SB/18 "Design Patent Application Transmittal" or its equivalent.

Approved 4-6-06
Jacqueline M. Stone
Jacqueline M. Stone, Director
Technology Center 1700

A preexamination search was conducted. The field of search was:

Class D21/747, 748, 749, 750, 751, 753, 759; and

Class 473/350

Related applications, now U.S. design patents: D 501,237 and D 500,825

If not previously filed for the above-identified application, the following items required by 37 CFR 1.155 are enclosed:

Formal drawings (see 37 CFR 1.84).

The fee set forth in 37 CFR 1.17(k).

An information disclosure statement in compliance with 37 CFR 1.98.

March 8, 2006	
Date	Signature
202-824-3000	David R. Gerk-Registration No. 56,901
Telephone Number	Typed or printed name

WARNING: Information on this form may become public. Credit card information should not be included on this form. Provide credit card information and authorization on PTO-2038.

This collection of information is required by 37 CFR 1.155. The information is required to obtain or retain a benefit by the public which is to file (and by the USPTO to process) an application. Confidentiality is governed by 35 U.S.C. 122 and 37 CFR 1.14. This collection is estimated to take 6 minutes to complete, including gathering, preparing, and submitting the completed application form to the USPTO. Time will vary depending upon the individual case. Any comments on the amount of time you require to complete this form and/or suggestions for reducing this burden, should be sent to the Chief Information Officer, U.S. Patent and Trademark Office, U.S. Department of Commerce. P.O. Box 1450, Alexandria, VA 22313-1450. DO NOT SEND FEES OR COMPLETED FORMS TO THIS ADDRESS. SEND TO: **Mail Stop Expedited Design, Commissioner for Patents, P.O. Box 1450, Alexandria, VA 22313-1450.**

If you need assistance in completing the form, call 1-800-PTO-9199 and select option 2.

3/09/2006 SSITHIB1 00000033 190733 29255381

1 FC:1802 900.00 DA

PTO/SB/27 (05-03)
Approved for use through 04/30/2003. OMB 0651-0031
U.S. Patent and Trademark Office; U.S. DEPARTMENT OF COMMERCE
Under the Paperwork Reduction Act of 1995, no persons are required to respond to a collection of information unless it displays a valid OMB control number.

REQUEST FOR EXPEDITED EXAMINATION OF A DESIGN APPLICATION (37 CFR 1.155)

Application Number	TO BE ASSIGNED
Filing Date	March 8, 2006
First Named Inventor	John T. Stites
Title	Portion Of A Golf Club Head For A Putter
Atty Docket Number	015127.00699

1 03/06 U.S. PTO
29255382
030806

HAND DELIVER TO THE DESIGN GROUP DIRECTOR'S OFFICE
-or- ADDRESS TO:
MAIL STOP EXPEDITED DESIGN
COMMISSIONER FOR PATENTS
P.O. Box 1450
Alexandria, VA 22313-1450

This is a request for expedited examination of a design application under 37 CFR 1.155.

NOTE: If the Request made by this form accompanies original application papers, include form PTO/SB/18 "Design Patent Application Transmittal" or its equivalent.

Approved 4-6-06
Jacqueline M. Stone
Jacqueline M. Stone, Director
Technology Center 1700

A preexamination search was conducted. The field of search was:

Class D21/736, 737, 738, 739, 740, 741, 742, 743, 744, 745, 746; and

Class 473/251, 252, 253, 254, 255, 256, 324, 325, 326, 327, 328, 329, 330, 331, 340 and 341.

Related applications, now U.S. design patents: D 499,781 and D 499,782.

If not previously filed for the above-identified application, the following items required by 37 CFR 1.155 are enclosed:

Formal drawings (see 37 CFR 1.84).

The fee set forth in 37 CFR 1.17(k).

An information disclosure statement in compliance with 37 CFR 1.98.

March 8, 2006	
Date	Signature
202-824-3000	David R. Gerk-Registration No. 56,901
Telephone Number	Typed or printed name

WARNING: Information on this form may become public. Credit card information should not be included on this form. Provide credit card information and authorization on PTO-2038.

This collection of information is required by 37 CFR 1.155. The information is required to obtain or retain a benefit by the public which is to file (and by the USPTO to process) an application. Confidentiality is governed by 35 U.S.C. 122 and 37 CFR 1.14. This collection is estimated to take 6 minutes to complete, including gathering, preparing, and submitting the completed application form to the USPTO. Time will vary depending upon the individual case. Any comments on the amount of time you require to complete this form and/or suggestions for reducing this burden, should be sent to the Chief Information Officer, U.S. Patent and Trademark Office, U.S. Department of Commerce, P.O. Box 1450, Alexandria, VA 22313-1450. DO NOT SEND FEES OR COMPLETED FORMS TO THIS ADDRESS. SEND TO: Mail Stop Expedited Design, Commissioner for Patents, P.O. Box 1450, Alexandria, VA 22313-1450.

If you need assistance in completing the form, call 1-800-PTO-9199 and select option 2.

03/09/2006 SSITHIB1 00000034 190733 29255382
01 FC:1802 900.00 DA

UNITED STATES PATENT AND TRADEMARK OFFICE

Commissioner for Patents
United States Patent and Trademark Office
P.O. Box 1450
Alexandria, VA 22313-1450
www.uspto.gov

SOFER & HAROUN, LLP.
317 MADISON AVENUE, SUITE 910
NEW YORK, NY 10017

COPY MAILED
SEP 22 2006
OFFICE OF PETITIONS

In re Application of	:	
Francois Buron	:	
Application No. 29/255,387	:	DECISION GRANTING
Filed: March 1, 2006	:	PETITION
Attorney Docket No. 979-214	:	

This is a decision on the communication filed May 24, 2006, which is being treated as a petition under 37 CFR 1.10(c) requesting that the above-identified application be accorded a filing date of March 1, 2006, rather than the presently accorded date of March 2, 2006.

Petitioner states that the correct filing date for the instant application is March 1, 2006. In support, petitioner supplied the Office with a copy of Express Mail receipt No. EV 689209567 US, which bears a USPS receipt date stamp of March 1, 2006. It is also noted that the Application Transmittal Letter was accompanied by a separate statement of Express Mail under 37 CFR 1.10, dated March 1, 2006, which references a Design Patent Application (1 page), Patent Transmittal, return postcard, Express Mail Certificate and an informal drawing (1 sheet).

The Office considers the date the paper or fee is shown to have been deposited as "Express Mail" to be the "date-in" on the Express Mail label, MPEP 513. Since the evidence is convincing that the application was deposited as "Express Mail" with the U. S. Postal Service on March 1, 2006, the petition is **GRANTED**. A corrected filing receipt with the March 1, 2006 filing date accompanies this decision.

This application file is being referred to the Office of Initial Patent Examination (OIPE) **for processing with a filing date of March 1, 2006.**

Telephone inquiries relating to this decision should be directed to Andrea Smith at (571) 272-3226. Telephone inquiries related to OIPE processing should be directed to their hotline at (571) 272-4000.

Frances Hicks for
Brian Hearn
Petitions Examiner
Office of Petitions

Attachment: Corrected Filing Receipt

UNITED STATES PATENT AND TRADEMARK OFFICE

UNITED STATES DEPARTMENT OF COMMERCE
United States Patent and Trademark Office
Address: COMMISSIONER FOR PATENTS
P.O. Box 1450
Alexandria, Virginia 22313-1450
www.uspto.gov

APPL NO.	FILING OR 371 (c) DATE	ART UNIT	FIL FEE REC'D	ATTY.DOCKET NO	DRAWINGS	TOT CLMS	IND CLMS
29/255,387	03/01/2006	2912	560	979-214	1	1	1

CONFIRMATION NO. 6386

CORRECTED FILING RECEIPT

OC000000020477340

39600
SOFER & HAROUN LLP.
317 MADISON AVENUE, SUITE 910
NEW YORK, NY 10017

Date Mailed: 09/18/2006

Receipt is acknowledged of this regular Patent Application. It will be considered in its order and you will be notified as to the results of the examination. Be sure to provide the U.S. APPLICATION NUMBER, FILING DATE, NAME OF APPLICANT, and TITLE OF INVENTION when inquiring about this application. Fees transmitted by check or draft are subject to collection. Please verify the accuracy of the data presented on this receipt. **If an error is noted on this Filing Receipt, please mail to the Commissioner for Patents P.O. Box 1450 Alexandria Va 22313-1450. Please provide a copy of this Filing Receipt with the changes noted thereon. If you received a "Notice to File Missing Parts" for this application, please submit any corrections to this Filing Receipt with your reply to the Notice. When the USPTO processes the reply to the Notice, the USPTO will generate another Filing Receipt incorporating the requested corrections (if appropriate).**

Applicant(s)

Francois Buron, Residence Not Provided;

Power of Attorney: None

Domestic Priority data as claimed by applicant

Foreign Applications

FRANCE 05 4397 09/02/2005
If Required, Foreign Filing License Granted: 03/20/2006

The country code and number of your priority application, to be used for filing abroad under the Paris Convention, is US29/255,387

Projected Publication Date: None, application is not eligible for pre-grant publication

Non-Publication Request: No

Early Publication Request: No

Title

Remote control for automobile vehicles

Preliminary Class

D13

PROTECTING YOUR INVENTION OUTSIDE THE UNITED STATES

Since the rights granted by a U.S. patent extend only throughout the territory of the United States and have no effect in a foreign country, an inventor who wishes patent protection in another country must apply for a patent in a specific country or in regional patent offices. Applicants may wish to consider the filing of an international application under the Patent Cooperation Treaty (PCT). An international (PCT) application generally has the same effect as a regular national patent application in each PCT-member country. The PCT process **simplifies** the filing of patent applications on the same invention in member countries, but **does not result** in a grant of "an international patent" and does not eliminate the need of applicants to file additional documents and fees in countries where patent protection is desired.

Almost every country has its own patent law, and a person desiring a patent in a particular country must make an application for patent in that country in accordance with its particular laws. Since the laws of many countries differ in various respects from the patent law of the United States, applicants are advised to seek guidance from specific foreign countries to ensure that patent rights are not lost prematurely.

Applicants also are advised that in the case of inventions made in the United States, the Director of the USPTO must issue a license before applicants can apply for a patent in a foreign country. The filing of a U.S. patent application serves as a request for a foreign filing license. The application's filing receipt contains further information and guidance as to the status of applicant's license for foreign filing.

Applicants may wish to consult the USPTO booklet, "General Information Concerning Patents" (specifically, the section entitled "Treaties and Foreign Patents") for more information on timeframes and deadlines for filing foreign patent applications. The guide is available either by contacting the USPTO Contact Center at 800-786-9199, or it can be viewed on the USPTO website at http://www.uspto.gov/web/offices/pac/doc/general/index.html.

For information on preventing theft of your intellectual property (patents, trademarks and copyrights), you may wish to consult the U.S. Government website, http://www.stopfakes.gov. Part of a Department of Commerce initiative, this website includes self-help "toolkits" giving innovators guidance on how to protect intellectual property in specific countries such as China, Korea and Mexico. For questions regarding patent enforcement issues, applicants may call the U.S. Government hotline at 1-866-999-HALT (1-866-999-4158).

LICENSE FOR FOREIGN FILING UNDER
Title 35, United States Code, Section 184
Title 37, Code of Federal Regulations, 5.11 & 5.15

GRANTED

The applicant has been granted a license under 35 U.S.C. 184, if the phrase "IF REQUIRED, FOREIGN FILING LICENSE GRANTED" followed by a date appears on this form. Such licenses are issued in all applications where the conditions for issuance of a license have been met, regardless of whether or not a license may be required as set forth in 37 CFR 5.15. The scope and limitations of this license are set forth in 37 CFR 5.15(a) unless an earlier license has been issued under 37 CFR 5.15(b). The license is subject to revocation upon written notification. The date indicated is the effective date of the license, unless an earlier license of similar scope has been granted under 37 CFR 5.13 or 5.14.

This license is to be retained by the licensee and may be used at any time on or after the effective date thereof unless it is revoked. This license is automatically transferred to any related applications(s) filed under 37 CFR 1.53(d). This license is not retroactive.

The grant of a license does not in any way lessen the responsibility of a licensee for the security of the subject matter as imposed by any Government contract or the provisions of existing laws relating to espionage and the national security or the export of technical data. Licensees should apprise themselves of current regulations especially with respect to certain countries, of other agencies, particularly the Office of Defense Trade Controls, Department of State (with respect to Arms, Munitions and Implements of War (22 CFR 121-128)); the Bureau of Industry and Security, Department of Commerce (15 CFR parts 730-774); the Office of Foreign Assets Control, Department of Treasury (31 CFR Parts 500+) and the Department of Energy.

NOT GRANTED

No license under 35 U.S.C. 184 has been granted at this time, if the phrase "IF REQUIRED, FOREIGN FILING LICENSE GRANTED" DOES NOT appear on this form. Applicant may still petition for a license under 37 CFR 5.12, if a license is desired before the expiration of 6 months from the filing date of the application. If 6 months has lapsed from the filing date of this application and the licensee has not received any indication of a secrecy order under 35 U.S.C. 181, the licensee may foreign file the application pursuant to 37 CFR 5.15(b).

PTO/SB/27 (09-04)
Approved for use through 07/31/2006. OMB 0651-0031
U.S. Patent and Trademark Office; U.S DEPARTMENT OF COMMERCE
Under the Paperwork Reduction ACT of 1995, no persons are required to respond to collection of information unless it displays a valid OMB control number.

REQUEST FOR EXPEDITED EXAMINATION OF A DESIGN APPLICATION (37 CFR 1.155)

Application Number	
Filing Date	
First Named Inventor	Paul R. Scharr
Title	
Atty Docket Number	

U.S. PTO
29255392
030806

ADDRESS TO:
MAIL STOP EXPEDITED DESIGN
COMMISSIONER FOR PATENTS
P.O. Box 1450
Alexandria, VA 22313-1450

REQUEST FOR EXPEDITED DESIGN

This is a request for expedited examination of a design application under 37 CFR 1.155.

NOTE: If the Request made by this form accompanies original application papers, include form PTO/SB/18 "Design Patent Application Transmittal" or its equivalent.

A preexamination search was conducted. The field of search was:
D8/382; 384, 385, 387, 388, 411/403, 411/405,

Related applications: Filed: 3//06/06 "Combined Jewelry Component and Cap"

If not previously filed for the above-identified application, the following items required by 37 CFR 1.155 are enclosed:

- Formal drawings (see 37 CFR 1.84).
- The fee set forth in 37 CFR 1.17(k).
- An information disclosure statement in compliance with 37 CFR 1.98.

Approved 4-6-06
Jacqueline M. Stone
Jacqueline M. Stone, Director
Technology Center 1700

Signature: Paul R. Scharr
Date: 3/6/11
Typed or printed name: Paul R. Scharr
Registration Number, if applicable:
Telephone Number: 480-488-8604

WARNING: Information on this form may become public. Credit card information should not be included on this form. Provide credit card information and authorization on PTO-2038.

This collection of information is required by 37 CFR 1.155. The information is required to obtain or retain a benefit by the public which is to file (and by the USPTO to process) an application. Confidentiality is governed by 35 U.S.C. 122 and 37 CFR 1.11 and 1.14. This collection is estimated to take 8 minutes to complete, including gathering, preparing, and submitting the completed application form to the USPTO. Time will vary depending upon the individual case. Any comments on the amount of time you require to complete this form and/or suggestions for reducing this burden, should be sent to the Chief Information Officer, U.S. Patent and Trademark Office, U.S. Department of Commerce, P.O. Box 1450, Alexandria, VA 22313-1450. DO NOT SEND FEES OR COMPLETED FORMS TO THIS ADDRESS. SEND TO: Commissioner for Patents, P.O. Box 1450, Alexandria, VA 22313-1450.

If you need assistance in completing the form, call 1-800-PTO-9199 and select option 2.

/09/2006 FFANAEIA 00000051 29255392
FC:1802 900.00 OP

PTO/SB/27 (09-04)
Approved for use through 07/31/2006. OMB 0651-0031
U.S. Patent and Trademark Office; U.S DEPARTMENT OF COMMERCE
Under the Paperwork Reduction ACT of 1995, no persons are required to respond to collection of information unless it displays a valid OMB control number.

REQUEST FOR EXPEDITED EXAMINATION OF A DESIGN APPLICATION (37 CFR 1.155)		
	Application Number	
	Filing Date	
	First Named Inventor	Paul R. Scharr
	Title	
	Atty Docket Number	

113006 U.S. PTO
29/255393
030806

ADDRESS TO:
MAIL STOP EXPEDITED DESIGN
COMMISSIONER FOR PATENTS
P.O. Box 1450
Alexandria, VA 22313-1450

REQUEST FOR EXPEDITED DESIGN

This is a request for expedited examination of a design application under 37 CFR 1.155.

NOTE: If the Request made by this form accompanies original application papers, include form PTO/SB/18 "Design Patent Application Transmittal" or its equivalent.

A preexamination search was conducted. The field of search was:
D8/387;411/403, 411/387, 411, 166, 178, 184, 188, 911, 427
63/1.11, 1.14, 33, 35, 38

Related applications: filed 3/6/06 "Screw for Jewelry Components"

If not previously filed for the above-identified application, the following items required by 37 CFR 1.155 are enclosed:

- Formal drawings (see 37 CFR 1.84).
- The fee set forth in 37 CFR 1.17(k).
- An information disclosure statement in compliance with 37 CFR 1.98.

Approved 4-6-06
Jacqueline M. Stone
Jacqueline M. Stone, Director
Technology Center 1700

Paul R Scharr
Signature

3/6/06
Date

Paul R. Scharr
Typed or printed name

Registration Number, if applicable

480-488-8604
Telephone Number

WARNING: Information on this form may become public. Credit card information should not be included on this form. Provide credit card information and authorization on PTO-2038.

This collection of information is required by 37 CFR 1.155. The information is required to obtain or retain a benefit by the public which is to file (and by the USPTO to process) an application. Confidentiality is governed by 35 U.S.C. 122 and 37 CFR 1.11 and 1.14. This collection is estimated to take 6 minutes to complete, including gathering, preparing, and submitting the completed application form to the USPTO. Time will vary depending upon the individual case. Any comments on the amount of time you require to complete this form and/or suggestions for reducing this burden, should be sent to the Chief Information Officer, U.S. Patent and Trademark Office, U.S. Department of Commerce, P.O. Box 1450, Alexandria, VA 22313-1450. DO NOT SEND FEES OR COMPLETED FORMS TO THIS ADDRESS. SEND TO: Commissioner for Patents, P.O. Box 1450, Alexandria, VA 22313-1450.

If you need assistance in completing the form, call 1-800-PTO-9199 and select option 2.

3/09/2006 FFANAEIA 00000050 29255393
1 FC:1802 900.00 OP

PTOISB/27 (09-04)
Approved for use through 07/31/2006. OMB 0651-0031
U.S. Patent and Trademark Office; U.S DEPARTMENT OF COMMERCE
Under the Paperwork Reduction ACT of 1995, no persons are required to respond to collection of information unless it displays a valid OMB control number.

REQUEST FOR EXPEDITED EXAMINATION OF A DESIGN APPLICATION (37 CFR 1.155)

Application Number	To be assigned
Filing Date	To be assigned
First Named Inventor	David Roulo
Title	PORTION OF A SHOE UPPER
Attorney Docket Number	2465-7598US

112921 U.S. PTO
29/255398
030806

ADDRESS TO:
MAIL STOP EXPEDITED DESIGN
COMMISSION FOR PATENTS
P.O. BOX 1450
Alexandria, VA 22313-1450

Approved 4-6-06
Jacqueline M. Stone
Jacqueline M. Stone, Director
Technology Center 1700

This is a request for expedited examination of a design application under 37 CER 1.155.

NOTE: If the Request made by this form accompanies original application papers, include form PTO/SB/18 "Design Patent Application Transmittal" or its equivalent.

A preexamination search was conducted. The field of search was:

US. CL. D2/896, D2/897, D2/902, D2/907, D2/908, D2/910 D2/911, D2/912, D2/916, D2/922, D2/935, D2/969, D2/970, D2/971, D2/972, 36/45, 36/50.1, 36/83, 36/88, 36/89, 36/93, 36/101, 36/102, 36/103, 36/104, 36/106, 36/108, 36/109, 36/113, 36/114, 36/115, 36/116, 36/126, 36/127, 36/128, 36/129, 36/130

Related applications: _____

If not previously filed for the above-identified application, the following items required by 37 CFR 1.155 are enclosed:

- Formal drawings (see 37 CFR 1.84).
- The fee set forth in 37 CFR 1.17(k).
- An information disclosure statement in compliance with 37 CFR 1.98.

Signature — Date: 2 March 2006

Laurence B. Bond — Typed or printed name

30,549 — Registration Number, if applicable

(801) 532-1922 — Telephone Number

WARNING: Information on this form may become public. Credit card information should not be included on this form. Provide credit card information and authorization on PTO-2038.

This collection of information is required by37 CFR 1.155. The information is required to obtain or retain a benefit by the public which is to file (and by the USPTO to process) an application. Confidentiality is governed by 35 U.S.C. 122 and 37 CFR 1.11 and 1.14. This collection is estimated to take 6 minutes to complete, including gathering, preparing, and submitting the completed application form to the USPTO. Time will vary depending upon the individual case. Any comments on the amount of time you require to complete this form and/or suggestions for reducing this burden, should be sent to the Chief Information Officer, U.S. Patent and Trademark Office, U.S. Department of Commerce, P.O. Box 1450, Alexandria, VA 22313-1450. DO NOT SEND FEES OR COMPLETED FORMS TO THIS ADDRESS. SEND TO: Commissioner for Patents, P.O. Box 1450, Alexandria, VA 22343-1450.
If you need assistance in completing the form, call 1-800-PTO-9199 and select option 2.

03/10/2006 FFANREIA 00000064 29255398
04 FC:1802 900.00 OP

PTO/SB/27 (09-04)
Approved for use through 07/31/2006. OMB 0651-0031
U.S. Patent and Trademark Office; U.S DEPARTMENT OF COMMERCE
Under the Paperwork Reduction ACT of 1995, no persons are required to respond to collection of information unless it displays a valid OMB control number.

REQUEST FOR EXPEDITED EXAMINATION OF A DESIGN APPLICATION (37 CFR 1.155)

Application Number	To be assigned
Filing Date	To be assigned
First Named Inventor	Bo Lupo
Title	PORTION OF A SHOE UPPER
Attorney Docket Number	2465-7576US

11282 U.S.PTO
29255399
030806

ADDRESS TO:
MAIL STOP EXPEDITED DESIGN
COMMISSION FOR PATENTS
P.O. BOX 1450
Alexandria, VA 22313-1450

Approved 4-6-06
Jacqueline M. Stone
Jacqueline M. Stone, Director
Technology Center 1700

This is a request for expedited examination of a design application under 37 CER 1.155.

NOTE: If the Request made by this form accompanies original application papers, include form PTO/SB/18 "Design Patent Application Transmittal" or its equivalent.

A preexamination search was conducted. The field of search was:

US. CL. D2/896, D2/897, D2/902, D2/907, D2/908, D2/910 D2/911, D2/912, D2/916, D2/922, D2/935, D2/969, D2/970, D2/971, D2/972, 36/45, 36/50.1, 36/83, 36/88, 36/89, 36/93, 36/101, 36/102, 36/103, 36/104, 36/106, 36/108, 36/109, 36/113, 36/114, 36/115, 36/116, 36/126, 36/127, 36/128, 36/129, 36/130

Related applications: _____

If not previously filed for the above-identified application, the following items required by 37 CFR 1.155 are enclosed:

- Formal drawings (see 37 CFR 1.84).
- The fee set forth in 37 CFR 1.17(k).
- An information disclosure statement in compliance with 37 CFR 1.98.

Signature — Date: 2 March 2006

Laurence B. Bond — Typed or printed name

30,549 — Registration Number, if applicable

(801) 532-1922 — Telephone Number

WARNING: Information on this form may become public. Credit card information should not be included on this form. Provide credit card information and authorization on PTO-2038.

This collection of information is required by37 CFR 1.155. The information is required to obtain or retain a benefit by the public which is to file (and by the USPTO to process) an application. Confidentiality is governed by 35 U.S.C. 122 and 37 CFR 1.11 and 1.14. This collection is estimated to take 6 minutes to complete, including gathering, preparing, and submitting the completed application form to the USPTO. Time will vary depending upon the individual case. Any comments on the amount of time you require to complete this form and/or suggestions for reducing this burden, should be sent to the Chief Information Officer, U.S. Patent and Trademark Office, U.S. Department of Commerce, P.O. Box 1450, Alexandria, VA 22313-1450. DO NOT SEND FEES OR COMPLETED FORMS TO THIS ADDRESS. SEND TO: Commissioner for Patents, P.O. Box 1450, Alexandria, VA 22343-1450.
If you need assistance in completing the form, call 1-800-PTO-9199 and select option 2.

03/10/2006 FFAHAEIA 00000065 29255399
04 FC:1802 900.00 OP

UNITED STATES PATENT AND TRADEMARK OFFICE

Commissioner for Patents
United States Patent and Trademark Office
P.O. Box 1450
Alexandria, VA 22313-1450
www.uspto.gov

ANGELA J. BADAMO
268 EAST BROADWAY, APT. A301
NEW YORK NY 10002

COPY MAILED

SEP 14 2009

OFFICE OF PETITIONS

In re Patent No. D556647 :
Issue Date: December 4, 2007 :
Application No. 29/255,404 : ON PETITION
Filed: March 9, 2006 :
Attorney Docket Number: 062153 :

This is a decision on the petition, filed August 7, 2009 under 37 CFR 1.182, requesting the issuance of a duplicate Letters Patent for the above-identified application.

The petition is **GRANTED**.

Since it is U.S. Patent and Trademark Office practice to assure mailing of all papers on the date indicated, there is a strong presumption that papers duly addressed and indicated as mailed, such as the Letters Patent in this application, are timely delivered to the addressee. To overcome this presumption, a verified statement with supporting evidence, such as any records which would disclose the receipt of other correspondence mailed from the U.S. Patent and Trademark Office on or about December 4, 2007, but fail to disclose receipt of the Letters Patent mailed on that date, should be promptly submitted. Further, copies of records on which receipt of the Letters Patent would have been entered had it been received are required.

However, if the loss of the Letters Patent was not the fault of the U.S. Patent and Trademark Office or if petitioner simply wishes to avoid overcoming the above-noted presumption, a petition may be filed under 37 CFR 1.182 accompanied by a petition fee of $400.00 requesting a duplicate Letters Patent.

Petitioners indicate that the Letters Patent were not received but have not presented any evidence to prove that the Letters Patent mailed December 4, 2007 were not received. In view thereof, the petition fee required is $400.00 and as it has been submitted with the instant petition, the fee has been applied to the finance records for the instant patent.

A copy of this decision is being forwarded to Publishing Division for issuance of a duplicate Letters Patent. The Publishing Division is directed to issue a duplicate Letters Patent.

Telephone inquiries concerning this decision may be directed to the undersigned Senior Petitions Attorney at (571) 272-3212. Inquiries regarding the issuance of a duplicate Letters Patent may be directed to the Office of Data Management at (703) 308-9250.

Patricia Faison-Ball

Patricia Faison-Ball
Senior Petitions Attorney
Office of Petitions

cc: Niomi Farmer (Fax – (571) 270-9753)

UNITED STATES PATENT AND TRADEMARK OFFICE

Commissioner for Patents
United States Patent and Trademark Office
P.O. Box 1450
Alexandria, VA 22313-1450
www.uspto.gov

WESTERMAN, HATTORI, DANIELS & ADRIAN, LLP
1250 CONNECTICUT AVENUE, NW
SUITE 700
WASHINGTON DC 20036

MAILED

OCT 08 2009

OFFICE OF PETITIONS

In re Patent No. D556647 :
Issue Date: December 4, 2007 :
Application No. 29/255,404 : ON PETITION
Filed: March 9, 2006 :
Attorney Docket Number: 062153 :

CORRECTED DECISION

This is a decision on the petition, filed August 7, 2009 under 37 CFR 1.182, requesting the issuance of a duplicate Letters Patent for the above-identified application.

The petition is **GRANTED**.

Since it is U.S. Patent and Trademark Office practice to assure mailing of all papers on the date indicated, there is a strong presumption that papers duly addressed and indicated as mailed, such as the Letters Patent in this application, are timely delivered to the addressee. To overcome this presumption, a verified statement with supporting evidence, such as any records which would disclose the receipt of other correspondence mailed from the U.S. Patent and Trademark Office on or about December 4, 2007, but fail to disclose receipt of the Letters Patent mailed on that date, should be promptly submitted. Further, copies of records on which receipt of the Letters Patent would have been entered had it been received are required.

However, if the loss of the Letters Patent was not the fault of the U.S. Patent and Trademark Office or if petitioner simply wishes to avoid overcoming the above-noted presumption, a petition may be filed under 37 CFR 1.182 accompanied by a petition fee of $400.00 requesting a duplicate Letters Patent.

Petitioners indicate that the Letters Patent were not received and notes that the correspondence address for the instant matter has never been changed.

A review of the file however reveals that an address change was filed prior to issuance of the patent, by a party not associated with or authorized in this matter. Thus, the

patent was mailed to the wrong address.

Since in this instance no petition fee is due, the fees in the amount of $400.00 paid with the instant petition will be refunded in due course.

Additionally, the correspondence address has been corrected

In view thereof, a copy of this decision is being forwarded to Publishing Division for issuance of a duplicate Letters Patent. The Publishing Division is directed to issue a duplicate Letters Patent.

Telephone inquiries concerning this decision may be directed to the undersigned Senior Petitions Attorney at (571) 272-3212. Inquiries regarding the issuance of a duplicate Letters Patent may be directed to the Office of Data Management at (703) 308-9250.

Patricia Faison-Ball

Patricia Faison-Ball
Senior Petitions Attorney
Office of Petitions

cc: Niomi Farmer (Fax – (571) 270-9753)

UNITED STATES PATENT AND TRADEMARK OFFICE

COMMISSIONER FOR PATENTS
UNITED STATES PATENT AND TRADEMARK OFFICE
P.O. BOX 1450
ALEXANDRIA, VA 22313-1450
www.uspto.gov

Rutan & Tucker, LLP.
611 ANTON BLVD
SUITE 1400
COSTA MESA CA 92626

RECEIVED

JAN 05 2009

OFFICE OF PETITIONS

In re Application of :
Greg Elterman :
Application No. 29/255,458 : DECISION
Filed: March 7, 2006 : ON PETITION
Atty Docket No. 101451.0002DES:

This is a decision on the PETITION FOR REVIVAL OF AN APPLICATION FOR PATENT ABANDONED UNAVOIDABLY UNDER 37 C.F.R. 1.137(a) filed July 31, 2008.

The petition is **DISMISSED**.

Any request for reconsideration of this decision must be submitted within **TWO (2) MONTHS** from the mail date of this decision. The reconsideration request should include a cover letter entitled "Renewed Petition under 37 CFR 1.137(a)" or "Renewed Petition under 37 CFR 1.137(b)," as appropriate. Extensions of time are permitted under § 1.136(a).

The above-identified application became abandoned for failure to pay the Issue Fee within three months of the mailing date, February 1, 2008, of the Notice of Allowance and Fee(s) Due. This Office action set a three-month nonextendable statutory period for reply. No issue fee was received. Accordingly, the application became abandoned effective May 2, 2008. A courtesy Notice of Abandonment was mailed on May 28, 2008.

In response, applicants timely filed this petition. The petition includes payment of the petition fee, the required response in the form of payment of the issue fee and the terminal disclaimer required to revive this design application. Applicants maintain that the delay in filing a reply was unavoidable as the Office action was not received at the correspondence address of record.

A grantable petition under § 1.137(a) must be accompanied by: (1) the reply required to the outstanding Office action or notice, unless previously filed; (2) the petition fee set forth in 37 C.F.R. § 1.17(l); (3) a showing to the satisfaction of the Commissioner that the entire delay in filing the required reply from the due date for the reply until the filing of a grantable petition pursuant to this paragraph was unavoidable; and (4) any terminal disclaimer (and fee as set forth in §1.20(d)) required pursuant to § 1.137(d). The instant petition fails to meet requirement (3).

Decisions on reviving abandoned applications on the basis of "unavoidable" delay have adopted the reasonably prudent person standard in determining if the delay was unavoidable:

> The word 'unavoidable' ... is applicable to ordinary human affairs, and requires no more or greater care or diligence than is generally used and observed by prudent and careful men in relation to their most important business. It permits them in the exercise of this care to rely upon the ordinary and trustworthy agencies of mail and telegraph, worthy and reliable employees, and such other means and instrumentalities as are usually employed in such important business. If unexpectedly, or through the unforeseen fault or imperfection of these agencies and instrumentalities, there occurs a failure, it may properly be said to be unavoidable, all other conditions of promptness in its rectification being present.

In re Mattullath, 38 App. D.C. 497, 514-15 (1912)(*quoting* Ex parte Pratt, 1887 Dec. Comm'r Pat. 31, 32-33 (1887)); see also Winkler v. Ladd, 221 F. Supp. 550, 552, 138 U.S.P.Q. 666, 167-68 (D.D.C. 1963), aff'd, 143 U.S.P.Q. 172 (D.C. Cir. 1963); Ex parte Henrich, 1913 Dec. Comm'r Pat. 139, 141 (1913). In addition, decisions on revival are made on a "case-by-case basis, taking all the facts and circumstances into account." Smith, 671 F.2d at 538, 213 U.S.P.Q. at 982. Nonetheless, a petition cannot be granted where a petitioner has failed to meet his or her burden of establishing that the delay was "unavoidable." Haines, 673 F. Supp. at 316-17, 5 U.S.P.Q.2d at 1131-32.

A review of the application file reveals no irregularities in the mailing of the Notice of Allowance mailed February 1, 2008. Thus, there is a strong presumption that the correspondence was properly mailed to the applicants at the correspondence address of record. As stated in MPEP 711.03(c):

> The showing required to establish required to establish nonreceipt of an Office communication must include a statement from the practitioner describing the system used for recording an Office action received at the correspondence address of record with the USPTO. The statement should establish that the docketing system is sufficiently reliable. It is expected that the record would include, but not be limited to, the application number, attorney docket number, the mail date of the Office action and the due date for the response.
>
> Practitioner must state that the Office action was not received at the correspondence address of record, and that a search of the practitioner's record(s), including any file jacket or the equivalent, and the application contents, indicates that the Office action was not received.
>
> A copy of the record(s) used by the practitioner where the non-received Office action would have been entered had it been received is required. A copy of the practitioner's record(s) required to show non-receipt of the Office action should include the master docket for the firm. That is, if a three month period for reply was set in the nonreceived Office action, a copy of the master docket report showing all replies docketed for a date three months from the mail date of the nonreceived Office action must be submitted as documentary proof of nonreceipt of the Office action. If no such master docket exists, the practitioner should so state and provide other evidence such as, but not limited to, the following: the application file jacket; incoming mail log; calendar; reminder system; or the individual docket record for the application in question.

The showing is not lessened because applicants seek revival pursuant to 37 CFR 1.137(a), rather than petition to withdraw the holding of abandonment pursuant to 37 CFR 1.181. The Delgar showing or other proper basis is required to establish that the delay was unavoidable. The burden is on petitioner to establish non-receipt. Petitioner submits that the Notice of Allowance was never received at the Rutan & Tucker law firm, the correspondence address of record. The practitioner of record also states that after reviewing the docketing system, application file and application contents, there is no indication of a Notice of Allowance ever received. In support thereof, practitioner submits a copy of the File Cover sheet.

Petitioner has not met his burden. The File Cover sheet does not clearly (or it appears accurately) set forth due dates. For example, a review of the application reveals that a Notice to File Missing Parts of Application was mailed in this application to the Rutan & Tucker law firm on April 4, 2006 with a due date of June 4, 2006. Although a response was timely filed on May 9, 2006, the undersigned does not see anything on the File Cover sheet which correlates with having received and docketed the Notice to File Missing Parts of Application. In view thereof, a description of the docketing system that is sufficient to show that it is reliable or that the records provided establish non-receipt is required. Furthermore, without explanation, the petition does not include as required a master docket record showing where the non-received Office communication would have been entered had it been received and docketed. Such a master docket is required. Thus, it is concluded that the showing of non-receipt set forth above is not met. The presumption that the correspondence was properly mailed to the address of record (and lost by applicants) is not overcome.

Having not made an adequate showing of non-receipt of the Notice of Allowance, the petition cannot be granted under §1.137(a). On renewed petition, applicants may submit further evidence to show non-receipt.

In the alternative, while the showing of record is not sufficient to establish to the satisfaction of the Director that the delay was unavoidable, petitioner is not precluded from obtaining relief by filing a request for reconsideration pursuant to 37 CFR § 1.137(b) on the basis of unintentional delay. A grantable petition under § 1.137(b) must be accompanied by: (1) the reply required to the outstanding Office action or notice, unless previously filed; (2) the petition fee set forth in 37 CFR §1.17(m); (3) a statement that the entire delay in filing the required reply from the due date for the reply until the filing of a grantable petition pursuant to this paragraph was unintentional; and (4) any terminal disclaimer (and fee as set forth in § 1.20(d)) required pursuant to § 1.137(d).

Further correspondence with respect to this matter should be addressed as follows:

By mail: Mail Stop Petition
Commissioner for Patents
P.O. Box 1450
Alexandria, VA 22313-1450

By FAX: (571) 273-8300
ATTN: NANCY JOHNSON
SENIOR PETITIONS ATTORNEY

By hand: Customer Service Window
Randolph Building
401 Dulany Street
Alexandria, VA 22314

Telephone inquiries related to this decision should be directed to the undersigned at (571) 272-3219.

Nancy Johnson
Senior Petitions Attorney
Office of Petitions

UNITED STATES PATENT AND TRADEMARK OFFICE

COMMISSIONER FOR PATENTS
UNITED STATES PATENT AND TRADEMARK OFFICE
P.O. BOX 1450
ALEXANDRIA, VA 22313-1450
www.uspto.gov

Rutan & Tucker, LLP.
611 ANTON BLVD
SUITE 1400
COSTA MESA CA 92626

COPY MAILED
MAR 02 2010

In re Application of :
Greg Elterman :
Application No. 29/255,458 : DECISION
Filed: March 7, 2006 : ON PETITION
Atty Docket No. 101451.0002DES:

This is a decision on the PETITION FOR REVIVAL OF AN APPLICATION FOR PATENT ABANDONED UNINTENTIONALLY UNDER 37 C.F.R. 1.137(b) filed March 5, 2009.

The petition is **GRANTED**.

The above-identified application became abandoned effective May 2, 2008 for failure to pay the Issue Fee within three months of the mailing date, February 1, 2008, of the Notice of Allowance and Fee(s) Due. A courtesy Notice of Abandonment was mailed on May 28, 2008.

By decision mailed January 5, 2009, a prior petition to revive based on unavoidable delay filed July 31, 2008 was dismissed. Applicant failed to meet their burden of showing that the delay was unavoidable based on non-receipt of the notice of allowance.

On instant renewed petition, applicant seeks revival based on the less stringent standard of unintentional delay. A grantable petition under § 1.137(b) must be accompanied by: (1) the reply required to the outstanding Office action or notice, unless previously filed; (2) the petition fee set forth in 37 CFR §1.17(m); (3) a statement that the entire delay in filing the required reply from the due date for the reply until the filing of a grantable petition pursuant to this paragraph was unintentional; and (4) any terminal disclaimer (and fee as set forth in § 1.20(d)) required pursuant to § 1.137(d).

The initial petition filed July 31, 2009 included a terminal disclaimer. On instant renewed petition, applicant submitted

the required reply in the form of payment of the issue fee[1], the petition fee under 37 CFR 1.137(b), the required statement of unintentional delay and another terminal disclaimer (and fee).

All requirements of 37 CFR 1.137(b) have been met.

The application is being forwarded to the Office of Data Management for processing into a patent.

Telephone inquiries related to this decision should be directed to the undersigned at (571) 272-3219.

Nancy Johnson
Senior Petitions Attorney
Office of Petitions

[1] There was no distinct but concurrent requirement for drawings.

UNITED STATES PATENT AND TRADEMARK OFFICE

Commissioner for Patents
United States Patent and Trademark Office
P.O. Box 1450
Alexandria, VA 22313-1450
www.uspto.gov

PEACOCK MYERS PC
201 THIRD STREET NW
SUITE 1340
ALBUQUERQUE, NM 87102

COPY MAILED

NOV 0 8 2006

OFFICE OF PETITIONS

In re Application of	:	
Karl W. Peterson	:	
Application No. 29/255,462	:	DECISION GRANTING
Filed: March 7, 2006	:	PETITION
Attorney Docket No. 32268-1002-D	:	

This is a decision on the petition, filed April 3, 2006 and resubmitted on August 14, 2006, requesting that the above-identified application be accorded a filing date of March 7, 2006. The petition is properly treated as a petition under 37 CFR 1.10(c).

Petitioner alleges that the application was deposited in Express Mail Service on March 7, 2006. In support of this allegation, the petition is accompanied by a copy of Express Mail receipt No. EV 779393107 US (the same Express Mail number found on the original application papers located in the official file) showing a "date in" of March 7, 2006. Additionally, the petition is accompanied by a copy of a receipt from the United States Postal Service of Albuquerque, NM, which shows that the postage for the package at issue bearing the above-noted Express Mail number, was charged to petitioner's corporate account on March 7, 2006.

The Office considers the date the paper or fee is shown to have been deposited as "Express Mail" to be the "date-in" on the Express Mail label; MPEP 513. The evidence is convincing that the application was deposited as "Express Mail" with the U. S. Postal Service on March 7, 2006.

In view of the above, the petition is **GRANTED**. Accordingly, this application has been accorded a filing date of March 7, 2006. A Corrected Filing Receipt with a filing date of March 7 2006 was mailed on August 18, 2006.

Telephone inquiries relating to this decision should be directed the undersigned at (571) 272-3218.

Frances Hicks
Petitions Examiner
Office of Petitions

UNITED STATES PATENT AND TRADEMARK OFFICE

UNITED STATES DEPARTMENT OF COMMERCE
United States Patent and Trademark Office
Address: COMMISSIONER FOR PATENTS
P.O. Box 1450
Alexandria, Virginia 22313-1450
www.uspto.gov

APPL NO.	FILING OR 371 (c) DATE	ART UNIT	FIL FEE REC'D	ATTY.DOCKET NO	DRAWINGS	TOT CLMS	IND CLMS
29/255,463	03/07/2006	2912	430	3018402 US01	4	1	1

CONFIRMATION NO. 2073

CORRECTED FILING RECEIPT

OC000000018688516

44331
HISCOCK & BARCLAY, LLP
2000 HSBC PLAZA
ROCHESTER, NY 14604-2404

Date Mailed: 05/05/2006

Receipt is acknowledged of this regular Patent Application. It will be considered in its order and you will be notified as to the results of the examination. Be sure to provide the U.S. APPLICATION NUMBER, FILING DATE, NAME OF APPLICANT, and TITLE OF INVENTION when inquiring about this application. Fees transmitted by check or draft are subject to collection. Please verify the accuracy of the data presented on this receipt. **If an error is noted on this Filing Receipt, please mail to the Commissioner for Patents P.O. Box 1450 Alexandria Va 22313-1450. Please provide a copy of this Filing Receipt with the changes noted thereon. If you received a "Notice to File Missing Parts" for this application, please submit any corrections to this Filing Receipt with your reply to the Notice. When the USPTO processes the reply to the Notice, the USPTO will generate another Filing Receipt incorporating the requested corrections (if appropriate).**

Applicant(s)

Noah Montena, Syracuse, NY;

Power of Attorney: The patent practitioners associated with Customer Number **44331**.

Domestic Priority data as claimed by applicant

Foreign Applications

If Required, Foreign Filing License Granted: 03/30/2006

The country code and number of your priority application, to be used for filing abroad under the Paris Convention, is US29/255,463

Projected Publication Date: None, application is not eligible for pre-grant publication

Non-Publication Request: No

Early Publication Request: No

Title

Hand attached coax cable connector

Preliminary Class

D13

PROTECTING YOUR INVENTION OUTSIDE THE UNITED STATES

Since the rights granted by a U.S. patent extend only throughout the territory of the United States and have no effect in a foreign country, an inventor who wishes patent protection in another country must apply for a patent in a specific country or in regional patent offices. Applicants may wish to consider the filing of an international application under the Patent Cooperation Treaty (PCT). An international (PCT) application generally has the same effect as a regular national patent application in each PCT-member country. The PCT process **simplifies** the filing of patent applications on the same invention in member countries, but **does not result** in a grant of "an international patent" and does not eliminate the need of applicants to file additional documents and fees in countries where patent protection is desired.

Almost every country has its own patent law, and a person desiring a patent in a particular country must make an application for patent in that country in accordance with its particular laws. Since the laws of many countries differ in various respects from the patent law of the United States, applicants are advised to seek guidance from specific foreign countries to ensure that patent rights are not lost prematurely.

Applicants also are advised that in the case of inventions made in the United States, the Director of the USPTO must issue a license before applicants can apply for a patent in a foreign country. The filing of a U.S. patent application serves as a request for a foreign filing license. The application's filing receipt contains further information and guidance as to the status of applicant's license for foreign filing.

Applicants may wish to consult the USPTO booklet, "General Information Concerning Patents" (specifically, the section entitled "Treaties and Foreign Patents") for more information on timeframes and deadlines for filing foreign patent applications. The guide is available either by contacting the USPTO Contact Center at 800-786-9199, or it can be viewed on the USPTO website at http://www.uspto.gov/web/offices/pac/doc/general/index.html.

For information on preventing theft of your intellectual property (patents, trademarks and copyrights), you may wish to consult the U.S. Government website, http://www.stopfakes.gov. Part of a Department of Commerce initiative, this website includes self-help "toolkits" giving innovators guidance on how to protect intellectual property in specific countries such as China, Korea and Mexico. For questions regarding patent enforcement issues, applicants may call the U.S. Government hotline at 1-866-999-HALT (1-866-999-4158).

LICENSE FOR FOREIGN FILING UNDER
Title 35, United States Code, Section 184
Title 37, Code of Federal Regulations, 5.11 & 5.15

GRANTED

The applicant has been granted a license under 35 U.S.C. 184, if the phrase "IF REQUIRED, FOREIGN FILING LICENSE GRANTED" followed by a date appears on this form. Such licenses are issued in all applications where the conditions for issuance of a license have been met, regardless of whether or not a license may be required as set forth in 37 CFR 5.15. The scope and limitations of this license are set forth in 37 CFR 5.15(a) unless an earlier license has been issued under 37 CFR 5.15(b). The license is subject to revocation upon written notification. The date indicated is the effective date of the license, unless an earlier license of similar scope has been granted under 37 CFR 5.13 or 5.14.

This license is to be retained by the licensee and may be used at any time on or after the effective date thereof unless it is revoked. This license is automatically transferred to any related applications(s) filed under 37 CFR 1.53(d). This license is not retroactive.

The grant of a license does not in any way lessen the responsibility of a licensee for the security of the subject matter as imposed by any Government contract or the provisions of existing laws relating to espionage and the national security or the export of technical data. Licensees should apprise themselves of current regulations especially with respect to certain countries, of other agencies, particularly the Office of Defense Trade Controls, Department of State (with respect to Arms, Munitions and Implements of War (22 CFR 121-128)); the Bureau of Industry and Security, Department of Commerce (15 CFR parts 730-774); the Office of Foreign Assets Control, Department of Treasury (31 CFR Parts 500+) and the Department of Energy.

NOT GRANTED

No license under 35 U.S.C. 184 has been granted at this time, if the phrase "IF REQUIRED, FOREIGN FILING LICENSE GRANTED" DOES NOT appear on this form. Applicant may still petition for a license under 37 CFR 5.12, if a license is desired before the expiration of 6 months from the filing date of the application. If 6 months has lapsed from the filing date of this application and the licensee has not received any indication of a secrecy order under 35 U.S.C. 181, the licensee may foreign file the application pursuant to 37 CFR 5.15(b).

OIPE IAP88
APR 27 2006
PATENT & TRADEMARK OFFICE

ED 277134154 US

EXPRESS MAIL
UNITED STATES POSTAL SERVICE®

Customer Copy
Label 11-B, March 2004

Post Office To Addressee

ORIGIN (POSTAL SERVICE USE ONLY)

PO ZIP Code: 14604	Day of Delivery: ☐ Next ☐ 2nd ☐ 2nd Del. Day	Postage: $ 14.40
Date Accepted: Mo. 6 Day 06 Year	Scheduled Date of Delivery: Month 7 Day 06	Return Receipt Fee: $
Time Accepted: 5:00 ☐ AM ☐ PM	Scheduled Time of Delivery: ☐ Noon ☐ 3 PM	COD Fee: $ / Insurance Fee: $
Flat Rate ☐ or Weight: lbs. 4 ozs.	Military: ☐ 2nd Day ☐ 3rd Day	Total Postage & Fees: $ 14.40
	Int'l Alpha Country Code	Acceptance Emp. Initials: AMN

DELIVERY (POSTAL USE ONLY)

Delivery Attempt: Mo. Day	Time: ☐ AM ☐ PM	Employee Signature
Delivery Attempt: Mo. Day	Time: ☐ AM ☐ PM	Employee Signature
Delivery Date: Mo. Day	Time: ☐ AM ☐ PM	Employee Signature

ROCHESTER NY MIDTOWN STATION USPS 7 APR 2006

CUSTOMER USE ONLY

PAYMENT BY ACCOUNT
Express Mail Corporate Acct. No.

Federal Agency Acct. No. or Postal Service Acct. No.

☐ WAIVER OF SIGNATURE (Domestic Mail Only)
Additional merchandise insurance is void if customer requests waiver of signature.
I wish delivery to be made without obtaining signature of addressee or addressee's agent (if delivery employee judges that article can be left in secure location) and I authorize that delivery employee's signature constitutes valid proof of delivery.

NO DELIVERY ☐ Weekend Holiday ☐

Mailer Signature

FROM: (PLEASE PRINT) PHONE ( )

Hiscock + Barclay LLP
2000 HSBC Plaza
Rochester, NY 14604

TO: (PLEASE PRINT) PHONE ( )

Commissioner for Patents
P.O. BOX 1450
Alexandria, VA

ZIP + 4 (U.S. ADDRESSES ONLY. DO NOT USE FOR FOREIGN POSTAL CODES.)

2 2 3 1 3 + 1 4 5 0

FOR INTERNATIONAL DESTINATIONS, WRITE COUNTRY NAME BELOW.

FOR PICKUP OR TRACKING
Visit www.usps.com
Call 1-800-222-1811

UNITED STATES POSTAL SERVICE

***** WELCOME TO *****
MIDTOWN STATION
ROCHESTER, NY 14604-9998
03/07/06 03:09PM

Store: USPS	Trans	104
Wkstn sys5006	Cashier	KJK9M1
Cashier's Name	ANGELA	
Stock Unit id	WINAMA	
PO Phone Number	1800-ASKUSPS	
USPS #	3510280604	

1. Exp. Mail PO-ADD 0.00
Destination: 22313
Weight: 4.60 oz.
Postage Type: Affixed
Affix. Post.: -14.40
Total Cost: 14.40
Base Rate: 14.40
Label#: ED277134154US

Subtotal 0.00
Total 0.00

Number of Items Sold: 1

Thank You
Please come again!

UNITED STATES PATENT AND TRADEMARK OFFICE

Commissioner for Patents
United States Patent and Trademark Office
P.O. Box 1450
Alexandria, VA 22313-1450
www.uspto.gov

WESTERMAN, HATTORI, DANIELS & ADRIAN, LLP
1250 CONNECTICUT AVENUE, NW
SUITE 700
WASHINGTON, DC 20036

COPY MAILED

MAY 12 2008

OFFICE OF PETITIONS

In re Application of Kai et al. :
Application No. 29/255,501 : Decision on Petition
Filing Date: March 9, 2006 :
Attorney Docket No. 062235 :

This is a decision on the petition under 37 CFR 1.137(b), filed December 12, 2007, to revive the above-identified application.

The petition is **granted**.

The above-identified application became abandoned for failure to submit corrected drawings in a timely manner in reply to the Notice of Allowability mailed August 7, 2007, which set a period for reply of three (3) months. The above-identified application became abandoned on November 8, 2007. A Notice of Abandonment was mailed on December 3, 2007.

The instant petition requests revival of the application.

Petitioner has submitted the required petition fee of $1,540. Petitioner has submitted a reply to the Notice of Allowability in the form of a corrected drawing sheet for Figure 7. Petitioner has stated -the entire delay in filing the required reply from the due date for the reply until the filing of a grantable petition pursuant to 37 CFR 1.137(b) was unintentional.

Petitioner has met the requirements to revive the above-identified application pursuant to 37 CFR 1.137(b). Therefore, the petition is granted and the application is revived.

The Office of Data Management will be informed of the instant decision and the application will be issued as a patent in due course.

Telephone inquiries regarding this communication should be directed to Petitions Attorney Steven Brantley at (571) 272-3203.

Charles Steven Brantley
Senior Petitions Attorney
Office of Petitions

PTO/SB/27 (09-04)
Approved for use through 07/31/2006. OMB 0651-0031
U.S. Patent and Trademark Office; U.S DEPARTMENT OF COMMERCE
Under the Paperwork Reduction ACT of 1995, no persons are required to respond to collection of information unless it displays a valid OMB control number.

REQUEST FOR EXPEDITED EXAMINATION OF A DESIGN APPLICATION (37 CFR 1.155)

Application Number	To be assigned
Filing Date	To be assigned
First Named Inventor	Scott Portzline
Title	PORTION OF A SHOE UPPER
Attorney Docket Number	2465-7604US

ADDRESS TO:
MAIL STOP EXPEDITED DESIGN
COMMISSION FOR PATENTS
P.O. BOX 1450
Alexandria, VA 22313-1450

Approved 4-6-06
Jacqueline M. Stone
Jacqueline M. Stone, Director
Technology Center 1700

113006 U.S. PTO
29/255504
030906

This is a request for expedited examination of a design application under 37 CER 1.155.

NOTE: If the Request made by this form accompanies original application papers, include form PTO/SB/18 "Design Patent Application Transmittal" or its equivalent.

A preexamination search was conducted. The field of search was:

US. CL. D2/896, D2/897, D2/902, D2/907, D2/908, D2/910 D2/911, D2/912, D2/916, D2/922, D2/935, D2/969, D2/970, D2/971, D2/972, 36/45, 36/50.1, 36/83, 36/88, 36/89, 36/93, 36/101, 36/102, 36/103, 36/104, 36/106, 36/108, 36/109, 36/113, 36/114, 36/115, 36/116, 36/126, 36/127, 36/128, 36/129, 36/130

Related applications: _____

If not previously filed for the above-identified application, the following items required by 37 CFR 1.155 are enclosed:

- Formal drawings (see 37 CFR 1.84).
- The fee set forth in 37 CFR 1.17(k).
- An information disclosure statement in compliance with 37 CFR 1.98.

Signature — Date: 2 March 2006

Laurence B. Bond — Typed or printed name

30,549 — Registration Number, if applicable

(801) 532-1922 — Telephone Number

WARNING: Information on this form may become public. Credit card information should not be included on this form. Provide credit card information and authorization on PTO-2038.

This collection of information is required by37 CFR 1.155. The information is required to obtain or retain a benefit by the public which is to file (and by the USPTO to process) an application. Confidentiality is governed by 35 U.S.C. 122 and 37 CFR 1.11 and 1.14. This collection is estimated to take 6 minutes to complete, including gathering, preparing, and submitting the completed application form to the USPTO. Time will vary depending upon the individual case. Any comments on the amount of time you require to complete this form and/or suggestions for reducing this burden, should be sent to the Chief Information Officer, U.S. Patent and Trademark Office, U.S. Department of Commerce, P.O. Box 1450, Alexandria, VA 22313-1450. DO NOT SEND FEES OR COMPLETED FORMS TO THIS ADDRESS. SEND TO: Commissioner for Patents, P.O. Box 1450, Alexandria, VA 22343-1450.
If you need assistance in completing the form, call 1-800-PTO-9199 and select option 2.

03/13/2006 JBALINAN 00000027 29255504
04 FC:1802 900.00 OP

UNITED STATES PATENT AND TRADEMARK OFFICE

Commissioner for Patents
United States Patent and Trademark Office
P.O. Box 1450
Alexandria, VA 22313-1450
www.uspto.gov

5-8-06

wk

In re Application of	:	
Hodong Sung	:	
Serial Number: 29/255,505	:	DECISION
Filed: March 09, 2006	:	ON
For: Portion of A Shoe Upper	:	PETITION

This is in response to the request filed March 9, 2006, requesting expedited examination of a design application under 37 CFR 1.155.

37 CFR 1.155 establishes an expedited procedure for design applications. A design application may qualify for expedited examination provided the following requirements are met:

(A) A request for expedited examination is filed (Form PTO/SB/27 may be used);

(B) The design application is complete and it includes drawings in compliance with 37 CFR 1.84 (see 37 CFR 1.154 and MPEP § 1503 concerning the requirements for a complete design application);

(C) A statement is filed indicating that a preexamination search was conducted (a search made by a foreign patent office satisfies this requirement). The statement must also include a list of the field of search such as by U.S. Class and Subclass (including domestic patent documents, foreign patent documents and nonpatent literature);

(D) An information disclosure statement in compliance with 37 CFR 1.98 is filed;

(E) The basic design application filing fee set forth in 37 CFR 1 .16(f) is paid; and

(F) The fee for expedited examination set forth in 37 CFR 1.17(k) is paid.

If an application requesting expedited examination fails to comply with one or more of the requirements for expedited examination under 37 CFR 1.155, but the application is otherwise complete, the applicant will be promptly notified and required to comply with all requirements under 37 CFR 1.155 within a shortened time period extendable under 37 CFR 1.136(a). Unless all requirements under 37 CFR 1.155 are timely met, the application will await action in its regular turn.

In this case, applicant has not filed a statement indicating that a preexamination search was conducted (a search made by a foreign patent office satisfies this requirement). The statement must also include a list of the field of search such as by U.S. Class and Subclass (including domestic patent documents, foreign patent documents and nonpatent literature).

The Request is **Denied**.

Jacqueline M. Stone

Jacqueline Stone, Director
Technology Center 2900
Designs

Laurence B. Bond
TRASK BRITT
P.O. BOX 2550
SALT LAKE CITY UT 84110

OIPE IAP2
MAY 3 0 2006
PATENT & TRADEMARK OFFICE

PTO/SB/27 (09-04)
Approved for use through 07/31/2006. OMB 0651-0031
U.S. Patent and Trademark Office; U.S DEPARTMENT OF COMMERCE
Under the Paperwork Reduction ACT of 1995, no persons are required to respond to collection of information unless it displays a valid OMB control number.

REQUEST FOR EXPEDITED EXAMINATION OF A DESIGN APPLICATION (37 CFR 1.155)

Application Number	To be assigned 29/255 505
Filing Date	To be assigned
First Named Inventor	HoDong Sung
Title	PORTION OF A SHOE UPPER
Attorney Docket Number	2465-7580US

ADDRESS TO:
MAIL STOP EXPEDITED DESIGN
COMMISSION FOR PATENTS
P.O. BOX 1450
Alexandria, VA 22313-1450

Approved 9-18-06
Jacqueline M. Stone
Jacqueline M. Stone, Director
Technology Center 1700/2900

This is a request for expedited examination of a design application under 37 CER 1.155.

NOTE: If the Request made by this form accompanies original application papers, include form PTO/SB/18 "Design Patent Application Transmittal" or its equivalent.

A preexamination search was conducted. The field of search was:

US. CL. D2/896, D2/897, D2/902, D2/907, D2/908, D2/910 D2/911, D2/912, D2/916, D2/922, D2/935, D2/969, D2/970, D2/971, D2/972, 36/45, 36/50.1, 36/83, 36/88, 36/89, 36/93, 36/101, 36/102, 36/103, 36/104, 36/106, 36/108, 36/109, 36/113, 36/114, 36/115, 36/116, 36/126, 36/127, 36/128, 36/129, 36/130

Related applications: _____

If not previously filed for the above-identified application, the following items required by 37 CFR 1.155 are enclosed:

- Formal drawings (see 37 CFR 1.84).
- The fee set forth in 37 CFR 1.17(k).
- An information disclosure statement in compliance with 37 CFR 1.98.

Signature	11 May 2006 Date
Laurence B. Bond Typed or printed name	30,549 Registration Number, if applicable
(801) 532-1922 Telephone Number	

WARNING: Information on this form may become public. Credit card information should not be included on this form. Provide credit card information and authorization on PTO-2038.

This collection of information is required by37 CFR 1.155. The information is required to obtain or retain a benefit by the public which is to file (and by the USPTO to process) an application. Confidentiality is governed by 35 U.S.C. 122 and 37 CFR 1.11 and 1.14. This collection is estimated to take 6 minutes to complete, including gathering, preparing, and submitting the completed application form to the USPTO. Time will vary depending upon the individual case. Any comments on the amount of time you require to complete this form and/or suggestions for reducing this burden, should be sent to the Chief Information Officer, U.S. Patent and Trademark Office, U.S. Department of Commerce, P.O. Box 1450, Alexandria, VA 22313-1450. DO NOT SEND FEES OR COMPLETED FORMS TO THIS ADDRESS. SEND TO: Commissioner for Patents, P.O. Box 1450, Alexandria, VA 22343-1450.
If you need assistance in completing the form, call 1-800-PTO-9199 and select option 2.

PTO/SB/27 (09-04)
Approved for use through 07/31/2006. OMB 0651-0031
U.S. Patent and Trademark Office; U.S DEPARTMENT OF COMMERCE
Under the Paperwork Reduction ACT of 1995, no persons are required to respond to collection of information unless it displays a valid OMB control number.

REQUEST FOR EXPEDITED EXAMINATION OF A DESIGN APPLICATION (37 CFR 1.155)

Application Number	To be assigned
Filing Date	To be assigned
First Named Inventor	Peter M. Fogg
Title	PORTION OF A SHOE UPPER
Attorney Docket Number	2465-7615US

ADDRESS TO:
MAIL STOP EXPEDITED DESIGN
COMMISSION FOR PATENTS
P.O. BOX 1450
Alexandria, VA 22313-1450

Approved 4-6-06
Jacqueline M. Stone
Jacqueline M. Stone, Director
Technology Center 1700

113006 U.S.PTO
29/255506
030906

This is a request for expedited examination of a design application under 37 CER 1.155.

NOTE: If the Request made by this form accompanies original application papers, include form PTO/SB/18 "Design Patent Application Transmittal" or its equivalent.

A preexamination search was conducted. The field of search was:

US. CL. D2/896, D2/897, D2/902, D2/907, D2/908, D2/910 D2/911, D2/912, D2/916, D2/922, D2/935, D2/969, D2/970, D2/971, D2/972, 36/45, 36/50.1, 36/83, 36/88, 36/89, 36/93, 36/101, 36/102, 36/103, 36/104, 36/106, 36/108, 36/109, 36/113, 36/114, 36/115, 36/116, 36/126, 36/127, 36/128, 36/129, 36/130

Related applications: _____

If not previously filed for the above-identified application, the following items required by 37 CFR 1.155 are enclosed:

- Formal drawings (see 37 CFR 1.84).
- The fee set forth in 37 CFR 1.17(k).
- An information disclosure statement in compliance with 37 CFR 1.98.

Signature — Date: 2 March 2006

Laurence B. Bond — Typed or printed name

30,549 — Registration Number, if applicable

(801) 532-1922 — Telephone Number

WARNING: Information on this form may become public. Credit card information should not be included on this form. Provide credit card information and authorization on PTO-2038.

This collection of information is required by37 CFR 1.155. The information is required to obtain or retain a benefit by the public which is to file (and by the USPTO to process) an application. Confidentiality is governed by 35 U.S.C. 122 and 37 CFR 1.11 and 1.14. This collection is estimated to take 6 minutes to complete, including gathering, preparing, and submitting the completed application form to the USPTO. Time will vary depending upon the individual case. Any comments on the amount of time you require to complete this form and/or suggestions for reducing this burden, should be sent to the Chief Information Officer, U.S. Patent and Trademark Office, U.S. Department of Commerce, P.O. Box 1450, Alexandria, VA 22313-1450. DO NOT SEND FEES OR COMPLETED FORMS TO THIS ADDRESS. SEND TO: Commissioner for Patents, P.O. Box 1450, Alexandria, VA 22343-1450.
If you need assistance in completing the form, call 1-800-PTO-9199 and select option 2.

03/13/2006 JBALINAN 00000029 29255506
04 FC:1802 900.00 OP

PTO/SB/27 (09-04)
Approved for use through 07/31/2006. OMB 0651-0031
U.S. Patent and Trademark Office; U.S DEPARTMENT OF COMMERCE
Under the Paperwork Reduction ACT of 1995, no persons are required to respond to collection of information unless it displays a valid OMB control number.

REQUEST FOR EXPEDITED EXAMINATION OF A DESIGN APPLICATION (37 CFR 1.155)

Application Number	To be assigned
Filing Date	To be assigned
First Named Inventor	Jeffrey Henderson
Title	PORTION OF A SHOE UPPER
Attorney Docket Number	2465-7605US

ADDRESS TO:
MAIL STOP EXPEDITED DESIGN
COMMISSION FOR PATENTS
P.O. BOX 1450
Alexandria, VA 22313-1450

Approved 4-6-06
Jacqueline M. Stone
Jacqueline M. Stone, Director
Technology Center 1700

113006 U.S. PTO
29/255507
030806

This is a request for expedited examination of a design application under 37 CER 1.155.

NOTE: If the Request made by this form accompanies original application papers, include form PTO/SB/18 "Design Patent Application Transmittal" or its equivalent.

A preexamination search was conducted. The field of search was:

US. CL. D2/896, D2/897, D2/902, D2/907, D2/908, D2/910 D2/911, D2/912, D2/916, D2/922, D2/935, D2/969, D2/970, D2/971, D2/972, 36/45, 36/50.1, 36/83, 36/88, 36/89, 36/93, 36/101, 36/102, 36/103, 36/104, 36/106, 36/108, 36/109, 36/113, 36/114, 36/115, 36/116, 36/126, 36/127, 36/128, 36/129, 36/130

Related applications: _____

If not previously filed for the above-identified application, the following items required by 37 CFR 1.155 are enclosed:

- Formal drawings (see 37 CFR 1.84).
- The fee set forth in 37 CFR 1.17(k).
- An information disclosure statement in compliance with 37 CFR 1.98.

Signature	2 March 2006 Date
Laurence B. Bond Typed or printed name	30,549 Registration Number, if applicable
(801) 532-1922 Telephone Number	

WARNING: Information on this form may become public. Credit card information should not be included on this form. Provide credit card information and authorization on PTO-2038.

This collection of information is required by37 CFR 1.155. The information is required to obtain or retain a benefit by the public which is to file (and by the USPTO to process) an application. Confidentiality is governed by 35 U.S.C. 122 and 37 CFR 1.11 and 1.14. This collection is estimated to take 6 minutes to complete, including gathering, preparing, and submitting the completed application form to the USPTO. Time will vary depending upon the individual case. Any comments on the amount of time you require to complete this form and/or suggestions for reducing this burden, should be sent to the Chief Information Officer, U.S. Patent and Trademark Office, U.S. Department of Commerce, P.O. Box 1450, Alexandria, VA 22313-1450. DO NOT SEND FEES OR COMPLETED FORMS TO THIS ADDRESS. SEND TO: Commissioner for Patents, P.O. Box 1450, Alexandria, VA 22343-1450.
If you need assistance in completing the form, call 1-800-PTO-9199 and select option 2.

03/13/2006 JBALINAN 00000072 29255507
04 FC:1802 900.00 OP

UNITED STATES PATENT AND TRADEMARK OFFICE

Commissioner for Patents
United States Patent and Trademark Office
P.O. Box 1450
Alexandria, VA 22313-1450
www.uspto.gov

PATENT DEPARMENT – 53051
KILPATRICK STOCKTON LLP
1001 WES FOURTH STREET
WINSTON-SALEM NC 27101

COPY MAILED

MAY 09 2007

OFFICE OF PETITIONS

In re Application of	:	
Kerah Cottrell Pelczarski, et al	:	
Application No. 29/255,528	:	DECISION ON PETITION
Filed: March 9, 2006	:	TO WITHDRAW
Attorney Docket No. 53051-321860	:	FROM RECORD
	:	

This is a decision on the Request to Withdraw as attorney or agent of record under 37 C.F.R. § 1.36(b), filed February 21, 2007.

The request is **NOT APPROVED**.

The Office cannot approve the request at this time since the reason provided does not meet any of the conditions under the mandatory or permissive categories enumerated in 37 CFR 10.40. Section 10.40 of Title 37 of the Code of Federal Regulation states, "a practitioner shall not withdraw from employment in a proceeding before the Office without permission from the Office." More specifically, 37 CFR 10.40 states, "if paragraph (b) of this section is not applicable, a practitioner may not request permission to withdraw in matter pending before the Office unless such request or such withdrawal is" for one the permissive reasons listed in 37 CFR 10.40(c). The reason set forth in the request, transferring files to another law firm, does not meet any of the conditions set forth in 37 CFR 10.40.

There are no Office actions pending at the present time.

All future communications from the Office will continue to be directed to the above-listed address until otherwise notified by applicant.

Telephone inquiries concerning this decision should be directed to Diane Goodwyn at 571-272-6735.

April Wise
Petitions Examiner
Office of Petitions

cc: JOHN A. DRAGSETH, ESQ.
FISH & RICHARDSON P.C.
60 SOUTH SIXTH STREET,
SUITE 3300
MINNEAPOLIS MN 55402

UNITED STATES PATENT AND TRADEMARK OFFICE

Commissioner for Patents
United States Patent and Trademark Office
P.O. Box 1450
Alexandria, VA 22313-1450
www.uspto.gov

COPY MAILED

OCT 01 2007

OFFICE OF PETITIONS

PATENT DEPARTMENT
KILPATRICK STOCKTON LLP
1001 WEST FOURTH STREET
WINSTON-SALEM, NC 27101

In re Application of
Kerah Cottrell PELCZARSKI, et al
Application No. 29/255,528
Filed: March 9, 2006
Attorney Docket No. 53051/321860

DECISION ON PETITION
TO WITHDRAW
FROM RECORD

This is a decision on the renewed Request to Withdraw as attorney or agent of record under 37 C.F.R. § 1.36(b), filed May 30, 2007.

The request is **DISMISSED** as moot.

A review of the file record indicates that the power of attorney given to, Kilpatrick Stockton, LLP has been revoked by the assignee of the patent application on August 3, 2007. Accordingly, the request to withdraw under 37 C.F.R. § 1.36(b) is moot.

The correspondence address of record has been changed and the new correspondence address is the address indicated below.

Telephone inquires concerning this decision should be directed to Diane Goodwyn at 571-272-6735.

April Wise
Petitions Examiner
Office of Petitions

cc: JOHN A. DRAGSETH
FISH & RICHARDSON, P.C.
60 SOUTH SIXTH STREET,
SUITE 3300
MINNEAPOLIS, MN 66402

UNITED STATES PATENT AND TRADEMARK OFFICE

Commissioner for Patents
United States Patent and Trademark Office
P.O. Box 1450
Alexandria, VA 22313-1450
www.uspto.gov

PATENT DEPARTMENT
KILPATRICK STOCKTON LLP
1001 WEST FOURTH STREET
WINSTON-SALEM, NC 27101

COPY MAILED

OCT 01 2007

OFFICE OF PETITIONS

In re Application of	:	
Kerah Cottrell PELCZARSKI, et al	:	
Application No. 29/255,528	:	DECISION ON PETITION
Filed: March 9, 2006	:	TO WITHDRAW
Attorney Docket No. 53051/321860	:	FROM RECORD
	:	

This is a decision on the renewed Request to Withdraw as attorney or agent of record under 37 C.F.R. § 1.36(b), filed May 30, 2007.

The request is **DISMISSED** as moot.

A review of the file record indicates that the power of attorney given to, Kilpatrick Stockton, LLP has been revoked by the assignee of the patent application on August 3, 2007. Accordingly, the request to withdraw under 37 C.F.R. § 1.36(b) is moot.

The correspondence address of record has been changed and the new correspondence address is the address indicated below.

Telephone inquires concerning this decision should be directed to Diane Goodwyn at 571-272-6735.

April Wise
Petitions Examiner
Office of Petitions

cc: JOHN A. DRAGSETH
FISH & RICHARDSON, P.C.
60 SOUTH SIXTH STREET,
SUITE 3300
MINNEAPOLIS, MN 66402

UNITED STATES PATENT AND TRADEMARK OFFICE

Commissioner for Patents
United States Patent and Trademark Office
P.O. Box 1450
Alexandria, VA 22313-1450
www.uspto.gov

PATENT DEPARMENT – 53051
KILPATRICK STOCKTON LLP
1001 WES FOURTH STREET
WINSTON-SALEM NC 27101

COPY MAILED

MAY 0 9 2007

OFFICE OF PETITIONS

In re Application of	:	
Kerah Cottrell Pelczarski, et al	:	
Application No. 29/255,529	:	DECISION ON PETITION
Filed: March 9, 2006	:	TO WITHDRAW
Attorney Docket No. 53051-321856	:	FROM RECORD
	:	

This is a decision on the Request to Withdraw as attorney or agent of record under 37 C.F.R. § 1.36(b), filed February 21, 2007.

The request is **NOT APPROVED**.

The Office cannot approve the request at this time since the reason provided does not meet any of the conditions under the mandatory or permissive categories enumerated in 37 CFR 10.40. Section 10.40 of Title 37 of the Code of Federal Regulation states, "a practitioner shall not withdraw from employment in a proceeding before the Office without permission from the Office." More specifically, 37 CFR 10.40 states, "if paragraph (b) of this section is not applicable, a practitioner may not request permission to withdraw in matter pending before the Office unless such request or such withdrawal is" for one the permissive reasons listed in 37 CFR 10.40(c). The reason set forth in the request, transferring files to another law firm, does not meet any of the conditions set forth in 37 CFR 10.40.

There are no pending Office actions at the present time.

All future communications from the Office will continue to be directed to the above-listed address until otherwise notified by applicant.

Telephone inquiries concerning this decision should be directed to Diane Goodwyn at 571-272-6735.

April Wise
Petitions Examiner
Office of Petitions

cc: JOHN A. DRAGSETH, ESQ.
FISH & RICHARDSON P.C.
60 SOUTH SIXTH STREET,
SUITE 3300
MINNEAPOLIS MN 55402

UNITED STATES PATENT AND TRADEMARK OFFICE

Commissioner for Patents
United States Patent and Trademark Office
P.O. Box 1450
Alexandria, VA 22313-1450
www.uspto.gov

PATENT DEPARTMENT
KILPATRICK STOCKTON LLP
1001 WEST FOURTH STREET
WINSTON-SALEM, NC 27101

COPY MAILED

OCT 01 2007

OFFICE OF PETITIONS

In re Application of	:	
Kerah Cottrell PELCZARSKI, et al	:	
Application No. 29/255,529	:	DECISION ON PETITION
Filed: March 9, 2006	:	TO WITHDRAW
Attorney Docket No. 53061/321856	:	FROM RECORD
	:	

This is a decision on the renewed Request to Withdraw as attorney or agent of record under 37 C.F.R. § 1.36(b), filed May 30, 2007.

The request is **DISMISSED** as moot.

A review of the file record indicates that the power of attorney given to, Kilpatrick Stockton, LLP has been revoked by the assignee of the patent application on August 3, 2007. Accordingly, the request to withdraw under 37 C.F.R. § 1.36(b) is moot.

The correspondence address of record has been changed and the new correspondence address is the address indicated below.

Telephone inquires concerning this decision should be directed to Diane Goodwyn at 571-272-6735.

April Wise
Petitions Examiner
Office of Petitions

cc: JOHN A. DRAGSETH
FISH & RICHARDSON, P.C.
60 SOUTH SIXTH STREET,
SUITE 3300
MINNEAPOLIS, MN 66402

PTO/SB/27 (09-04)
Approved for use through 07/31/2006. OMB 0651-0031
U.S. Patent and Trademark Office: U.S DEPARTMENT OF COMMERCE
Under the Paperwork Reduction ACT of 1995, no persons are required to respond to collection of information unless it displays a valid OMB control number.

REQUEST FOR EXPEDITED EXAMINATION OF A DESIGN APPLICATION (37 CFR 1.155)

Application Number	To be assigned
Filing Date	To be assigned
First Named Inventor	Kirsten Uta Schambra et al.
Title	PORTION OF A SHOE UPPER
Attorney Docket Number	2465-7614US

ADDRESS TO:

MAIL STOP EXPEDITED DESIGN
COMMISSION FOR PATENTS
P.O. BOX 1450
Alexandria, VA 22313-1450

113006 U.S.PTO
29/255597
030906

This is a request for expedited examination of a design application under 37 CER 1.155.

NOTE: If the Request made by this form accompanies original application papers, include form PTO/SB/18 "Design Patent Application Transmittal" or its equivalent.

A preexamination search was conducted. The field of search was:

US. CL. D2/896, D2/897, D2/902, D2/907, D2/908, D2/910 D2/911, D2/912, D2/916, D2/922, D2/935, D2/969, D2/970, D2/971, D2/972, 36/45, 36/50.1, 36/83, 36/88, 36/89, 36/93, 36/101, 36/102, 36/103, 36/104, 36/106, 36/108, 36/109, 36/113, 36/114, 36/115, 36/116, 36/126, 36/127, 36/128, 36/129, 36/130

Related applications: _____

If not previously filed for the above-identified application, the following items required by 37 CFR 1.155 are enclosed:

- Formal drawings (see 37 CFR 1.84).
- The fee set forth in 37 CFR 1.17(k).
- An information disclosure statement in compliance with 37 CFR 1.98.

Signature	2 March 2006 Date
Laurence B. Bond Typed or printed name	30,549 Registration Number, if applicable
(801) 532-1922 Telephone Number	

WARNING: Information on this form may become public. Credit card information should not be included on this form. Provide credit card information and authorization on PTO-2038.

This collection of information is required by37 CFR 1.155. The information is required to obtain or retain a benefit by the public which is to file (and by the USPTO to process) an application. Confidentiality is governed by 35 U.S.C. 122 and 37 CFR 1.11 and 1.14. This collection is estimated to take 6 minutes to complete, including gathering, preparing, and submitting the completed application form to the USPTO. Time will vary depending upon the individual case. Any comments on the amount of time you require to complete this form and/or suggestions for reducing this burden, should be sent to the Chief Information Officer, U.S. Patent and Trademark Office, U.S. Department of Commerce, P.O. Box 1450, Alexandria, VA 22313-1450. DO NOT SEND FEES OR COMPLETED FORMS TO THIS ADDRESS. SEND TO: Commissioner for Patents, P.O. Box 1450, Alexandria, VA 22343-1450.
If you need assistance in completing the form, call 1-800-PTO-9199 and select option 2.

03/14/2006 SSAHDARA 00000039 29255597
01 FC:1802 980.00 OP

UNITED STATES PATENT AND TRADEMARK OFFICE

Commissioner for Patents
United States Patent and Trademark Office
P.O. Box 1450
Alexandria, VA 22313-1450
www.uspto.gov

ALBERT O COTA
5460 WHITE OAK AVE
SUITE A-331
ENCINO CA 91316

COPY MAILED
DEC 1 2 2008

In re Application of	:	
Bradley G. Jenkins	:	
Application No. 29/255,617	:	DECISION ON PETITION
Filed: March 13, 2006	:	
Attorney Docket No. 06PLI1382	:	

This is a decision on the petition under the unintentional provisions of 37 CFR 1.137(b), filed November 19, 2008, to revive the above-identified application.

The petition is **DISMISSED**.

Any request for reconsideration of this decision must be submitted within TWO (2) MONTHS from the mail date of this decision. Extensions of time under 37 CFR 1.136(a) are permitted. The reconsideration request should include a cover letter entitled "Renewed Petition under 37 CFR 1.137(b)." This is **not** a final agency action within the meaning of 5 U.S.C. § 704.

This application became abandoned for failure to timely file replacement drawings on or before October 10, 2008, as required by the Notice of Allowability, mailed July 10, 2008. Accordingly, the date of abandonment of this application is October 11, 2008.

A grantable petition under 37 CFR 1.137(b) must be accompanied by: (1) the required reply, unless previously filed; (2) the petition fee as set forth in 37 CFR 1.17(m); (3) a statement that the entire delay in filing the required reply from the due date for the reply until the filing of a grantable petition pursuant to 37 CFR 1.137(b) was unintentional; and (4) any terminal disclaimer (and fee as set forth in 37 CFR 1.20(d)) required by 37 CFR 1.137(d). Where there is a question as to whether either the abandonment or the delay in filing a petition under 37 CFR 1.137 was unintentional, the Director may require additional information. See MPEP 711.03(c)(II)(C) and (D). The instant petition lacks item 4.

A Terminal Disclaimer and $65 fee is required under 37 CFR 1.137(d) if the application is: (1) a design application, (2) a utility application filed before June 8, 1995, or (3) a plant application filed before June 8, 1995. The Terminal Disclaimer must dedicate to the public a terminal part of the of the term of any patent granted the application equivalent to the period of abandonment of the application, and must also apply to any patent granted on any application containing a specific reference under 35 U.S.C. 120, 121 or 365(c) to the application from which revival is sought.

Further correspondence with respect to this matter should be addressed as follows:

By Mail: Mail Stop PETITION
Commissioner for Patents
P. O. Box 1450
Alexandria, VA 22313-1450

By hand: U. S. Patent and Trademark Office
Customer Service Window, Mail Stop Petitions
Randolph Building
401 Dulany Street
Alexandria, VA 22314

The centralized facsimile number is **(571) 273-8300.**

Telephone inquiries concerning this decision should be directed to Denise Williams at (571) 272-8930.

Brian Brown
Petitions Examiner
Office of Petitions

UNITED STATES PATENT AND TRADEMARK OFFICE

Commissioner for Patents
United States Patent and Trademark Office
P.O. Box 1450
Alexandria, VA 22313-1450
www.uspto.gov

ALBERT O. COTA
5460 WHITE OAK AVE
SUITE A-331
ENCINO CA 91316

COPY MAILED

JUL 14 2009

OFFICE OF PETITIONS

In re Application of	:	
Bradley G. Jenkins	:	
Application No. 29/255,617	:	DECISION ON PETITION
Filed: March 13, 2006	:	
Attorney Docket No. 06PLI1382	:	

This is a decision on the renewed petition under the unintentional provisions of 37 CFR 1.137(b), filed February 3, 2009, to revive the above-identified application.

The petition is **GRANTED**.

The application became abandoned for failure to timely file replacement drawings on or before October 10, 2007, as required by the Notice of Allowability, mailed July 10, 2007, which set a shortened statutory period for reply of three (3) months. No extension of time is available under this provision. According, the application became abandoned on October 11, 2007.

The petition satisfies the requirements of 37 CFR 1.137(b) in that petitioner has supplied (1) the reply in the form of a replacement drawings , (2) the petition fee of $810,(3) a proper statement of unintentional delay, and (4) a terminal disclaimer and fee (charged to deposit account). The petitioner also submitted the issue fee and publication fee in the amount of $400. The terminal disclaimer submitted on February 3, 2009 is approved.

Telephone inquiries concerning this decision should be directed to Newton Edwards at (571) 272-6052 or in his absence to the undersigned at 571-272-7099.

This application is being referred to The Office of Data Management for further processing.

David Bucci
Petitions Examiner
Office of Petitions

UNITED STATES PATENT AND TRADEMARK OFFICE

COMMISSIONER FOR PATENTS
UNITED STATES PATENT AND TRADEMARK OFFICE
P.O. BOX 1450
ALEXANDRIA, VA 22313-1450
www.uspto.gov

GEORGE R. REARDON
3356 STATION COURT
LAWRENCVILLE GA 30044

COPY MAILED
JUN 21 2007
OFFICE OF PETITIONS

In re Application of :
Stewart, et al. : DECISION ON PETITION
Application No. 29/255,624 :
For: March 11, 2006 :
Atty. Dkt. No.: 03-0010-14 :

This is a decision on the petition under 37 CFR 1.137(a), March 29, 2007, to revive the above-identified application.

The petition under 37 CFR 1.137(a) is **DISMISSED**.

Any request for reconsideration of this decision must be submitted within **TWO (2) MONTHS** from mail date of this decision. Extensions of time under 37 CFR 1.136(a) are permitted. The reconsideration request should include a cover letter entitled "Renewed Petition under 37 CFR 1.137(a)." This is not a final agency decision.

This application became abandoned February 18, 2007 for failure to timely submit a proper reply to the Notice of Allowance (Notice) mailed November 17, 2006. The Notice set a three month statutory period of time for reply. Notice of Abandonment was mailed March 28, 2007.

A grantable petition under 37 CFR 1.137(a) must be accompanied by: (1) the required reply, unless previously filed; (2) the petition fee as set forth in 37 CFR 1.17(l); (3) a showing to the satisfaction of the Director that the entire delay in filing the required reply from the due date for the reply until the filing of a grantable petition pursuant to 37 CFR 1.137(a) was unavoidable; and (4) any terminal disclaimer (and fee as set forth in 37 CFR 1.20(d)) required pursuant to 37 CFR 1.137(c).

The instant petition fails to satisfy requirement (3) set forth above.

Petitioners have failed to present a showing to the satisfaction of the Director that the entire delay in filing the required reply from the due date for the reply until the filing of a grantable petition pursuant to 37 CFR 1.137(a) was unavoidable.

The Office may revive an abandoned application if the delay in responding to the relevant outstanding Office requirement is shown to the satisfaction of the Director to have been "unavoidable." See, 37 CFR 1.137(a)(3). Decisions on reviving abandoned applications have adopted the reasonably prudent person standard in determining if the delay was unavoidable. Ex parte Pratt, 1887 Dec. Comm'r Pat. 31, 32-33 (Comm'r Pat. 1887)(the term "unavoidable" "is applicable to ordinary human affairs, and requires no more or greater care or diligence than is generally used and observed by prudent and careful men in relation to their most important business"); In re Mattullath, 38 App. D.C. 497, 514-15 (D.C. Cir. 1912); Ex parte Henrich, 1913 Dec. Comm'r Pat. 139, 141 (Comm'r Pat. 1913). In addition, decisions on revival are made on a "case-by-case basis, taking all the facts and circumstances into account." Smith v. Mossinghoff, 671 F.2d 533, 538, 213 USPQ 977, 982 (D.C. Cir. 1982). A petition to revive an application as unavoidably abandoned cannot be granted where petitioner has failed to meet his or her burden of establishing the cause of the unavoidable delay. Haines v. Quigg, 673 F. Supp. 314, 5 USPQ2d 1130 (N.D. Ind. 1987).

Petitioners attribute the failure to reply to the Notice to non-receipt of the Notice.

In the absence of any irregularity in the mailing of the Notice, there is a strong presumption that the Notice was properly mailed to practitioner at the address of record. This presumption may be overcome by a showing that the Notice was not in fact received.

The showing required to establish non-receipt of an Office communication must include a statement from the practitioner stating that the Office communication was not received by the practitioner and attesting to the fact that a search of the file jacket and docket records indicates that the Office communication was not received. A copy of the docket record where the non-received Office communication would have been entered had it been received and docketed must be attached to and referenced in practitioner's statement. *See*, MPEP 711.03(c). The showing outlined above may not be sufficient if there are circumstances that point to a conclusion that the Office communication may have been lost after receipt rather than a conclusion that the Office communication was lost in the mail. *See*, MPEP 711.03(c).

The instant petition is not supported by any documentary evidence of non-receipt of the Notice.

Any renewed petition must establish that the entire period of time from the time that a reply to the Office communication was due until the filing of a grantable petition was unavoidable.

ALTERNATE VENUE

Petitioners may wish to consider filing a petition stating that the entire delay was unintentional. Petitioners' attention is directed to 37 CFR 1.137(b) which provides for the revival of an "unintentionally" abandoned application without a showing that the delay in prosecution or in late payment of an issue fee was "unavoidable". An "unintentional" petition under 37 CFR 1.137(b) must be accompanied by the required petition fee and reply.

The filing of a petition under 37 CFR 1.137(b) cannot be intentionally delayed and therefore must be filed promptly. A person seeking revival due to unintentional delay cannot make a statement that the delay was unintentional unless the entire delay, including the delay from the date it was discovered that the application was abandoned until the filing of the petition to revive under 37 CFR 1.137(b), was unintentional. A statement that the delay was unintentional is not appropriate if petitioner intentionally delayed the filing of a petition for revival under 37 CFR 1.137(b).

Further correspondence with respect to this matter should be addressed as follows:

By mail: Mail Stop Petition
Commissioner for Patents
P.O. Box 1450
Alexandria, VA 22313-1450

By facsimile: (571) 273-8300

By hand: U.S. Patent and Trademark Office
Customer Window
Mail Stop Petition
Randolph Building
Dulany Street
Alexandria, VA 22314

Telephone inquiries concerning this matter may be directed to the undersigned at (571) 272-3205.

Alesia M. Brown
Petitions Attorney
Office of Petitions

UNITED STATES PATENT AND TRADEMARK OFFICE

Commissioner for Patents
United States Patent and Trademark Office
P.O. Box 1450
Alexandria, VA 22313-1450
www.uspto.gov

COPY MAILED

DEC 18 2007

OFFICE OF PETITIONS

GEORGE R. REARDON
3356 STATION COURT
LAWRENCVILLE GA 30044

In re Application of	:
Stewart, et al.	: DECISION ON PETITION
Application No. 29/255,624	:
For: March 11, 2006	:
Atty. Dkt. No.: 03-0010-14	:

This is a decision on the petition renewed under 37 CFR 1.137(b), September 29, 2007, to revive the above-identified application.

The petition under 37 CFR 1.137(b) is **GRANTED**.

This application became abandoned February 18, 2007 for failure to timely submit a proper reply to the Notice of Allowance (Notice) mailed November 17, 2006. The Notice set a three month statutory period of time for reply. Notice of Abandonment was mailed March 28, 2007.

A grantable petition under 37 CFR 1.137(b) must be accompanied by: (1) the required reply, unless previously filed; (2) the required petition fee; (3) a statement that the entire delay in filing the required reply from the due date for the reply until the filing of a grantable petition pursuant to 37 CFR 1.137(b) was unintentional; and (4) any terminal disclaimer (and fee as set forth in 37 CFR 1.20(d)) required pursuant to 37 CFR 1.137(c).

The instant petition has been reviewed and found in compliance with the above set forth 37 CFR 1.137(b) requirements.

This application is being directed to the Office of Patent Publications for further processing.

Telephone inquiries concerning this matter may be directed to the undersigned at (571) 272-3205.

Alesia M. Brown
Petitions Attorney
Office of Petitions

UNITED STATES PATENT AND TRADEMARK OFFICE

Commissioner for Patents
United States Patent and Trademark Office
P.O. Box 1450
Alexandria, VA 22313-1450
www.uspto.gov

GEORGE R REARDON
3356 STATION COURT
LAWRENCVILLE GA 30044

COPY MAILED

MAY 23 2007

OFFICE OF PETITIONS

In re Application of	:	
Stewart, et al.	:	
Application No. 29/255,631	:	ON PETITION
Filed: March 11, 2006	:	
Attorney Docket No. 03-0010-15	:	

This is a decision on the petition to revive under 37 CFR 1.137(a), filed March 29, 2007.

The petition under 37 CFR 1.137(a) is **DISMISSED**.

Any request for reconsideration of this decision must be submitted within **TWO (2) MONTHS** from the mail date of this decision. The reconsideration request should include a cover letter entitled "Renewed Petition under 37 CFR 1.137(a)". Extensions of time under 37 CFR 1.136(a) are permitted. No fee is required for a renewed petition.

The above-identified application became abandoned for failure to timely pay the issue fee in response to the Notice of Allowance, mailed November 17, 2006. This Notice set a statutory period for reply of three (3) months. No reply having been received, the application became abandoned on February 18, 2007. A Notice of Abandonment was mailed on March 28, 2007.

A grantable petition under 37 CFR 1.137(a) must be accompanied by: (1) the reply required to the outstanding Office action or notice, unless previously filed; (2) the petition fee set forth in 37 CFR 1.17(l); and (3) a showing to the satisfaction of the Commissioner that the entire delay in filing the required reply

from the due date for the reply until the filing of a grantable petition pursuant to this paragraph was unavoidable. The instant petition lacks items (3) and (1).

Decisions on reviving abandoned applications on the basis of "unavoidable" delay have adopted the reasonably prudent person standard in determining if the delay was unavoidable: "The word 'unavoidable' ... is applicable to ordinary human affairs, and requires no more or greater care or diligence than is generally used and observed by prudent and careful men in relation to their most important business."[1]

Moreover, delay resulting from the lack of knowledge or improper application of the patent statutes, rules of practice or the Manual of Patent Examining Procedure, however, does not constitute "unavoidable" delay.[2]

With regards to item (3), petitioner states that he did not receive the November 17, 2006 Notice of Allowance.

To establish nonreceipt of an Office action, a petitioner must: 1) include a statement that the Office action was not received; 2) attest to the fact that a search of the file jacket and docket records indicates that the Office action was not received; and 3) include a copy of the **docket record** where the nonreceived Office action would have been entered had it been received and docketed.[3] A proper docket report consists of a "docket record where the nonreceived Office action would have been entered had it been received and docketed."[4] "For example, if a three month period for reply was set in the nonreceived Office action, a copy of the docket record showing all replies docketed for a date three months from the mail date of the nonreceived Office action must be submitted..."[5]

---

[1] In re Mattulath, 38 App. D.C. 497, 514-15 (1912)(*quoting* Ex parte Pratt, 1887 Dec. Comm'r Pat. 31, 32-33 (1887)); see also Winkler v. Ladd, 221 F. Supp. 550, 552, 138 U.S.P.Q. 666, 167-68 (D.D.C. 1963), aff'd, 143 U.S.P.Q. 172 (D.C. Cir. 1963); Ex parte Henrich, 1913 Dec. Comm'r Pat. 139, 141 (1913).

[2] See Haines, 673 F. Supp. at 317, 5 U.S.P.Q. 2d at 1132; Vincent v. Mossinghoff, 230 U.S.P.Q. 621, 624 (D.D.C. 1985); Smith v. Diamond, 209 U.S.P.Q. 1091 (D.D.C. 1981); Potter v. Dann, 201 U.S.P.Q. 574 (D.D.C. 1978); Ex parte Murray, 1891 Dec. Comm'r Pat. 130, 131 (1891).

[3] See MPEP 711.03(c)(II).

[4] MPEP 711.03(c)(II) (emphasis added).

[5] Id.

Alternative Venue and Other Matters:

While the showing of record is not sufficient to establish to the satisfaction of the Commissioner that the delay was unavoidable, petitioner is not precluded from obtaining relief by filing a petition pursuant to 37 CFR 1.137(b) on the basis of unintentional delay. A grantable petition pursuant to 37 CFR 1.137(b) must be accompanied by (1) The reply required to the outstanding Office action or notice, unless previously filed; (2) The petition fee as set forth in 37 CFR 1.17(m), currently $1500; and (3) A statement that the entire delay in filing the required reply from the due date for the reply until the filing of a grantable petition pursuant to this paragraph was unintentional.

Further correspondence with respect to this matter should be addressed as follows:

By mail: Mail Stop Petitions
Commissioner for Patents
P.O. Box 1450
Alexandria VA 22313-1450

By FAX: (571) 273-8300
Attn: Office of Petitions

Telephone inquiries related to this decision should be directed to the undersigned at (571)272-3207.

Cliff Congo
Petitions Attorney
Office of Petitions

UNITED STATES PATENT AND TRADEMARK OFFICE

Commissioner for Patents
United States Patent and Trademark Office
P.O. Box 1450
Alexandria, VA 22313-1450
www.uspto.gov

GEORGE R REARDON
3356 STATION COURT
LAWRENCVILLE GA 30044

COPY MAILED

AUG 06 2007

OFFICE OF PETITIONS

In re Application of	:	
Stewart, et al.	:	
Application No. 29/255,631	:	ON PETITION
Filed: March 11, 2006	:	
Attorney Docket No. 03-0010-15	:	

This is a decision on the petition to revive under 37 CFR 1.137(b), filed July 22, 2007.

The petition under 37 CFR 1.137(b) is **GRANTED**.

The above-identified application became abandoned for failure to timely pay the issue fee in response to the Notice of Allowance, mailed November 17, 2006. This Notice set a statutory period for reply of three (3) months. No reply having been received, the application became abandoned on February 18, 2007. A Notice of Abandonment was mailed on March 28, 2007. Applicants filed a petition to revive under 37 CFR 1.137(a) on March 29, 2007. However, the petition was dismissed in a decision mailed on May 23, 2007.

With the instant petition, petitioner paid the petition fee and made the proper statement of unintentional delay. The issue fee and the terminal disclaimer were previously filed on March 29, 2007.

The matter is being forwarded to the Office of Patent Publication for processing into a patent.

Telephone inquiries related to this decision should be directed to the undersigned at (571)272-3207.

Cliff Congo
Petitions Attorney
Office of Petitions

UNITED STATES PATENT AND TRADEMARK OFFICE

Commissioner for Patents
United States Patent and Trademark Office
P.O. Box 1450
Alexandria, VA 22313-1450
www.uspto.gov

MASUVALLEY & PARTNERS
8765 AERO DRIVE
SUITE 312
SAN DIEGO, CA 92123

COPY MAILED

APR 0 8 2008

OFFICE OF PETITIONS

In re Application of :
Tsutomu Matsuura :
Application No. 29/255,664 :
Filed: March 10, 2006 :
Attorney Docket No. 14100-303 US :

DECISION ON PETITION

This is a decision on the petition under 37 CFR 1.137(b), filed on October 30, 2007, to revive the above-identified application.

The petition is **DISMISSED**.

There is no indication that the person signing the instant petition was ever given a power of attorney or authorization of agent to prosecute the above-identified application. In accordance with 37 CFR 1.34(a), the signature appearing on the petition shall constitute a representation to the United States Patent and Trademark Office that he/she is authorized to represent the particular party in whose behalf he/she acts.

On the other hand, the terminal disclaimer under 37 CFR 1.137(d), filed October 30, 2007, cannot be accepted since it is not signed by an attorney or agent of record.

37 CFR 1.321(b) states:

> An applicant or assignee may disclaim or dedicate to the public the entire term, or any terminal part of the term, of a patent to be granted. Such terminal disclaimer is binding upon the grantee and its successors or assigns. The terminal disclaimer, to be recorded in the Patent and Trademark Office, must:
>
> (1) Be signed:
> (i) By the applicant, or
> (ii) If there is an assignee of record of an undivided part interest, by the applicant and such assignee, or

(iii) If there is an assignee of record of the entire interest, by such assignee, or
(iv) By an attorney or agent of record;
(2) Specify the portion of the term of the patent being disclaimed;
(3) State the present extent of applicant's or assignee's ownership interest in the patent to be granted; and
(4) Be accompanied by the fee set forth in §1.20(d).
(c) A terminal disclaimer, when filed to obviate judicially

In view of the above, an appropriate power of attorney or authorization of agent must be submitted.

Any request for reconsideration of this decision must be submitted within **TWO (2) MONTHS** from the mail date of this decision. Extensions of time under 37 CFR 1.136(a) are permitted. The reconsideration request should include a cover letter entitled "Renewed Petition under 37 CFR 1.137(b)." This is **not** a final agency action within the meaning of 5 U.S.C. § 704.

Further correspondence with respect to this matter should be addressed as follows:

By mail: Mail Stop PETITION
Commissioner for Patents
P. O. Box 1450
Alexandria, VA 22313-1450

By hand: U. S. Patent and Trademark Office
Customer Service Window, Mail Stop Petitions
Randolph Building
401 Dulany Street
Alexandria, VA 22314

The centralized facsimile number is **(571) 273-8300.**

Any questions concerning this decision should be directed to the undersigned at (571) 272-3226.

Andrea Smith
Petitions Examiner
Office of Petitions

UNITED STATES PATENT AND TRADEMARK OFFICE

Commissioner for Patents
United States Patent and Trademark Office
P.O. Box 1450
Alexandria, VA 22313-1450
www.uspto.gov

MASUVALLEY & PARTNERS
8765 AERO DRIVE
SUITE 312
SAN DIEGO, CA 92123

COPY MAILED

JUN 17 2008

In re Application of	:	
Tsutomu Matsuura	:	
Application No. 29/255,664	:	DECISION ON PETITION
Filed: March 10, 2006	:	
Attorney Docket No. 14100-303 US	:	

This is a decision on the renewed petition under the unintentional provisions of 37 CFR 1.137(b), filed April 14, 2008, to revive the above-identified application.

The petition is **DISMISSED**.

There is confusion as to whether or not the person signing the petition was properly given a power of attorney or authorization of agent to prosecute the application. In accordance with 37 CFR 1.34(a), the signature appearing on the petition shall constitute a representation to the United States Patent and Trademark Office that he/she is authorized to represent the particular party in whose behalf he/she acts.

On the other hand, the terminal disclaimer under 37 CFR 1.137(b), filed October 30, 2007, cannot be accepted since it is not clear as to whether it has been signed by an attorney or agent properly made of record.

37 CFR 1.321(b) states:

An applicant or assignee may disclaim or dedicate to the public the entire term, or any terminal part of the term, of a patent to be granted. Such terminal disclaimer is binding upon the grantee and its successors or assigns. The terminal disclaimer, to be recorded in the Patent and Trademark Office, must:

(1) Be signed;
(i) By the applicant, or
(ii) If there is an assignee of record of an undivided part interest, by the applicant, the applicant and such assignee, or
(iii) If there is an assignee of record of the entire interest, by such assignee, or

(iv) By an attorney or agent of record;
(2) Specify the portion of the term of the patent being disclaimed;
(3) State the present extent of applicant's or assignee's ownership interest in the patent to be granted; and
(4) Be accompanied by the fee set for the 1.20(d).
(c) A terminal disclaimer, when filed to obviate judicially

With respect to the power of attorney submitted with the renewed petition, the power of attorney cannot be accepted at this time. The renewed petition included a copy of a Declaration and Power of Attorney which: (1) appointed Peter Martinez, Reg. No. 42,845 to prosecute this application and transact all business in the Patent and Trademark Office connected therewith; (2) was signed by the inventor and dated March 31, 2006; and (3) was typed except for the Power of Attorney information which was handwritten. A thorough review of the record indicates that a Declaration and Power of Attorney was previously filed in the instant application on May 22, 2006 and was also signed by the inventor and dated March 31, 2006; however, this Declaration and Power of Attorney failed to appoint any power of attorney, *i.e.,* the power of attorney information was left blank. On November 7, 2006, petitioner filed a Request for Corrected Filing Receipt stating that a power of attorney had been filed in the above-identified application. On November 15, 2006, a Response to Request for Corrected Filing Receipt was mailed informing petitioner that the Power of Attorney you provided did not comply with the new Power of Attorney rules that became effective on June 25, 2004, see 37 CFR 1.32. Accordingly, petitioner was on notice that the above-identified application did not have a proper power of attorney. In view of the above, there is a discrepancy in the record which makes it unclear as to whether a proper power of attorney exists in this application and thus, the petition to revive cannot be granted at this time. Should petitioner desire to renew this petition and have the required terminal disclaimer accepted, petitioner must obtain an appropriate power of attorney, file a new terminal disclaimer with an appropriate signature, or clarify the circumstances surrounding the power of attorney submitted with this renewed petition. See 37 CFR 1.321(b) *supra.*

Any request for reconsideration of this decision must be submitted within TWO (2) MONTHS from the mail date of this decision. Extensions of time under 37 CFR 1.136(a) are permitted. The reconsideration request should include a cover letter entitled "Renewed Petition under 37 CFR 1.137(b)." This is **not** a final agency action within the meaning of 5 U.S.C. § 704.

Further correspondence with respect to this matter should be addressed as follows:

By Mail: Mail Stop PETITION
Commissioner for Patents
P. O. Box 1450
Alexandria, VA 22313-1450

By hand: U. S. Patent and Trademark Office
Customer Service Window, Mail Stop Petitions
Randolph Building

401 Dulany Street
Alexandria, VA 22314

The centralized facsimile number is **(571) 273-8300.**

Telephone inquiries concerning this decision should be directed to Kimberly Inabinet at (571) 272-4618.

David Bucci
Petitions Examiner
Office of Petitions

UNITED STATES PATENT AND TRADEMARK OFFICE

Commissioner for Patents
United States Patent and Trademark Office
P.O. Box 1450
Alexandria, VA 22313-1450
www.uspto.gov

Masuvalley & Partners
8765 Aero Drive
Suite 312
San Diego, CA 92123

In re Application of	:	
Tsutomu Matsuura	:	
Application No. 29/255,664	:	DECISION ON PETITION
Filed: March 10, 2006	:	
Attorney Docket No. 14100-303 US	:	

COPY MAILED
OCT 01 2008

This is a decision on the renewed petition under the unintentional provisions of 37 CFR 1.137(b), filed August 11, 2008, to revive the above-identified application.

The petition is **GRANTED**.

The application became abandoned for failure to submit corrected drawings in a timely manner in reply to the Notice of Allowability mailed on January 10, 2007, which set a period for reply of three (3) months. Accordingly, the application became abandoned on April 11, 2007. A Notice of Abandonment was mailed on August 27, 2007.

The petition satisfies the requirements of 37 CFR 1.137(b) in that petitioner has supplied (1) the reply in the form of corrected drawings, (2) the petition fee of $770, (3) a proper statement of unintentional delay. Accordingly, the corrected drawings are accepted as being unintentionally delayed.

The petition decisions mailed on June 17, 2008 and April 8, 2008, in response to the petitions filed April 14, 2008 and October 30, 2007 respectively, were dismissed due to the discrepancies with the appointment of power of attorney. The renewed petition includes a properly executed oath and declaration.

The terminal disclaimer is accepted and has been made of record. Any continuing application filed from this application must contain a copy of the terminal disclaimer. The copy of the terminal disclaimer must be filed with a cover letter requesting the terminal disclaimer be recorded on the continuing application. A copy of this decision should be attached to the cover letter.

Telephone inquiries concerning this decision should be directed to Kimberly Inabinet at (571) 272-4618.

This application is being referred to the Office of Data Management for further processing into a patent.

Carl Friedman
Petitions Examiner
Office of Petitions

UNITED STATES PATENT AND TRADEMARK OFFICE

Commissioner for Patents
United States Patent and Trademark Office
P.O. Box 1450
Alexandria, VA 22313-1450
www.uspto.gov

MASUVALLEY & PARTNERS
8765 AERO DRIVE
SUITE 312
SAN DIEGO CA 92123

COPY MAILED

NOV 30 2007

OFFICE OF PETITIONS

In re Application of	:	
Tsutomu Matsuura	:	
Application No. 29/255,665	:	DECISION ON PETITION
Filed: March 10, 2006	:	
Attorney Docket No.	:	
14100-302 US		

This is a decision on the petition under 37 CFR 1.137(b), filed October 30, 2007, to revive the above-identified application.

The petition is **GRANTED**.

This application became abandoned for failure to submit drawings in a timely manner in reply to the Notice of Allowability, mailed January 10, 2007, which set a period for reply of three (3) months. Accordingly, this application became abandoned on April 11, 2007. A Notice of Abandonment was mailed on October 11, 2007.

The petition satisfies the requirements of 37 CFR 1.137(b) in that petitioner has supplied (1) the reply in the form of replacement drawings of Figures 1 through 4, (2) the petition fee of $770, (3) a proper statement of unintentional delay, and (4) a terminal disclaimer and fee as required by 37 CFR 1.137(d). Accordingly, the reply to the Notice of January 10, 2007 is accepted as being unintentionally delayed.

The terminal disclaimer is accepted and has been made of record. Any continuing application filed from this application must contain a copy of the terminal disclaimer. The copy of the terminal disclaimer must be filed with a cover letter requesting the terminal disclaimer be recorded on the continuing application. A copy of this decision should be attached to the cover letter.

Telephone inquiries concerning this decision should be directed to the undersigned at (571) 272-3218.

This application is being referred to the Office of Data Management for further processing in accordance with this decision reviving the application.

Frances Hicks
Petitions Examiner
Office of Petitions

UNITED STATES PATENT AND TRADEMARK OFFICE

Commissioner for Patents
United States Patent and Trademark Office
P.O. Box 1450
Alexandria, VA 22313-1450
www.uspto.gov

MASUVALLEY & PARTNERS
8765 AERO DRIVE
SUITE 312
SAN DIEGO CA 92123

COPY MAILED

DEC 0 7 2007

OFFICE OF PETITIONS

ON PETITION

In re Application of :
Tsutomu Matsuura :
Application No. 29/255,666 :
Filed: March 10, 2006 :
Attorney Docket No. 14100-301 US :

This is a decision on the petition under 37 CFR 1.137(b), filed October 30, 2007, to revive the above-identified application.

The petition is **GRANTED**.

The above-identified application became abandoned for failure to submit corrected drawings in a timely manner in reply to the Notice of Allowance mailed January 10, 2007, which set a statutory period for reply of three (3) months. Accordingly, by operation of law, the above-identified application became abandoned on April 11, 2007.

The petition satisfies the conditions for revival pursuant to the provisions of 37 CFR 1.137(b) in that (1) the reply in the form of corrected drawings; (2) the petition fee of $770; (3) the required statement of unintentional delay; and (4) a terminal disclaimer and fee as required by 37 CFR 1.137(d) have been received. Accordingly, the corrected drawings are accepted as having been unintentionally delayed.

The terminal disclaimer is accepted and has been made of record.

Telephone inquiries concerning this decision should be directed to Carl Friedman at (571) 272-6842.

The application file is being referred to the Office of Patent Publication.

David Bucci
Petitions Examiner
Office of Petitions

UNITED STATES PATENT AND TRADEMARK OFFICE

Commissioner for Patents
United States Patent and Trademark Office
P.O. Box 1450
Alexandria, VA 22313-1450
www.uspto.gov

MASUVALLEY & PARTNERS
8765 AERO DRIVE
SUITE 312
SAN DIEGO CA 92123

COPY MAILED

NOV 16 2007

OFFICE OF PETITIONS

In re Application of
Tsutomu Matsuura
Application No. 29/255,700
Filed: March 10, 2006
Attorney Docket No. **14100-304 US**

ON PETITION

This is a decision on the petition filed October 30, 2007 under 37 CFR 1.137(b), [1] to revive the above-identified application.

The petition under 37 CFR 1.137 (b) is **GRANTED**.

A Notice of Allowability, mailed January 10, 2007, required the submission of corrected drawings on or before April 10, 2007. This application became abandoned April 11, 2007. Accordingly, a Notice of Abandonment was mailed October 11, 2007.

All other requirements under 37 CFR 1.137(b) having been met, including the filing of a terminal disclaimer and fee, this matter is being referred to the Publishing Division.

Telephone inquiries concerning this matter may be directed to the undersigned Petitions Attorney at (571) 272-3212.

Patricia Faison-Ball

Patricia Faison-Ball
Senior Petitions Attorney
Office of Petitions

---

[1] Effective December 1, 1997, the provisions of 37 CFR 1.137(b) now provide that where the delay in reply was unintentional, a petition may be filed to revive an abandoned application or a lapsed patent pursuant to 37 CFR 1.137(b). A grantable petition filed under the provisions of 37 CFR 1.137(b) must be accompanied by:

(1) the required reply, unless previously filed. In a nonprovisional application abandoned for failure to prosecute, the required reply may be met by the filing of a continuing application. In a nonprovisional application filed on or after June 8, 1995, and abandoned for failure to prosecute, the required reply may also be met by the filing of a request for continued examination in compliance with § 1.114. In an application or patent, abandoned or lapsed for failure to pay the issue fee or any portion thereof, the required reply must be the payment of the issue fee or any outstanding balance thereof.

(2) the petition fee as set forth in 37 CFR 1.17(m);

(3) a statement that the entire delay in filing the required reply from the due date for the reply until the filing of a grantable petition pursuant to 37 CFR 1.137(b) was unintentional. The Commissioner may required additional information where there is a question whether the delay was unintentional; and

(4) any terminal disclaimer (and fee as set forth in 37 CFR 1.20(d)) required pursuant to 37 CFR 1.137(c)).

UNITED STATES PATENT AND TRADEMARK OFFICE

COMMISSIONER FOR PATENTS
UNITED STATES PATENT AND TRADEMARK OFFICE
P.O. BOX 1450
ALEXANDRIA, VA 22313-1450
www.uspto.gov

BAKER, DONELSON, BEARMAN, CALDWELL & BERKOWITZ
SUITE 900
FIVE CONCOURSE PARKWAY
ATLANTA GA 30328

COPY MAILED
JUL 14 2006
OFFICE OF PETITIONS

In re Application of	:	
Graham	:	ON PETITION
Application No.: 29/255,712	:	
Filed: March 10, 2006	:	
Attorney Docket No.: 2786400-000426	:	
For: PEDESTAL		

This is in response to the petition under 37 CFR 1.47(b), filed June 12, 2006 (certificate of mailing date June 6, 2006).

The petition is dismissed.

Any request for reconsideration of this decision must be submitted within TWO (2) MONTHS from the mail date of this decision. Extensions of time under 37 CFR 1.136(a) are permitted. Any response should be entitled "Request for Reconsideration of Petition Under 37 CFR 1.47(b)" and may include an oath or declaration executed by the inventor. **Failure to respond will result in abandonment of the application.**

The above-identified application was filed on March 10, 2006 without an executed oath or declaration. Accordingly, on April 6, 2006, a "Notice to File Missing Parts of Nonprovisional Application" was mailed, requiring an executed oath or declaration and a surcharge for its late filing.

In response, on June 12, 2006 (certificate of mailing June 6, 2006), a non-executed declaration, the surcharge, the petition fee, and the instant petition were filed. The petition, signed by Attorney Dorian B. Kennedy, sets forth the last known address of the non-signing sole inventor, William B. Graham, and explains that Mr. Graham no longer lives at his last known residence and attempts to contact him through his wife's e-mail address and his last known telephone number were fruitless.

A grantable petition under 37 CFR 1.47(b) requires:

(1) proof that the non-signing inventor cannot be reached or refuses to sign the oath or declaration;
(2) an acceptable oath or declaration;
(3) the petition fee;
(4) a statement of the last known address of the non-signing inventor;
(5) proof of proprietary interest; and
(6) proof of irreparable damage.

Applicant lacks item (1), (2), (5) and (6) set forth above.

As to item (1), Rule 47 applicant has failed to show that the inventor cannot be reached. A showing of **diligence** is critical in obtaining Rule 47 status when an inventor cannot be located or reached.

Petitioner should engage in further efforts to locate Mr. Graham. Petitioner has not stated how it is known that Graham no longer resides at 1550 North Parkway, Apt. 502, Memphis, TN 38112. Were the application papers mailed there?

The following is a list of evidentiary sources that are commonly relied upon to prove inability to locate an inventor: searches of Internet databases for individuals with the name of William B. Graham within close geographic proximity of his last known address; inquiries of local telephone directories; telegrams; and documented inquiries of last known employers. Every listed type of search need not be done. However, a diligent effort to find the inventor must be made.

Documentary evidence that supports a finding that the non-signing inventor could not be found or reached should be made part of any affidavits or declarations that fully describe the exact facts which are relied on to establish that a diligent effort was made to locate the non-signing inventor. Printed computer records would suffice.

The affidavit or declaration of facts must be signed, where at all possible, by a person having *firsthand knowledge* of the facts recited therein. Statements based on hearsay will not normally be accepted. It is important that the affidavit or declaration contain statements of fact as opposed to conclusions.

If not done already, a copy of the application papers should be sent to the last known address of the non-signing inventor with a request that he sign the declaration for the patent application. A forwarding address should be requested, if the papers are returned, **and other attempts** to locate the inventor continue to fail, then applicant will have established that the inventor cannot be reached.

As to item (2), an oath or declaration for the patent application in compliance with 37 CFR 1.63 and 1.64 still has not been presented. The declaration has not been signed by a properly empowered representative of the Rule 1.47 applicant. No one has signed the declaration. An oath or declaration in compliance with 37 CFR 1.63 and 1.64 signed by a properly empowered

representative of the Rule 1.47 applicant is REQUIRED. See MPEP 409.03(b). Petitioner may wish to submit an addendum to the previously submitted unexecuted declaration that is signed by the representative of the Rule 1.47 applicant. As stated in the MPEP 409.03(b), where an oath is signed by a registered attorney on behalf of a corporation, either proof of the attorney's authority in the form of a statement signed by an appropriate corporate officer must be submitted, or the attorney may simply state that he is authorized to sign on behalf of the corporation.

As to item (5), Rule 47 applicant failed to show or provide proof that Hunter Fan Company has sufficient proprietary interest in the subject matter to justify the filing of the application (see MPEP 409.03(f)). Acceptable proof would include a copy of the employment agreement between the non-signing inventor and the Rule 47(b) applicant (company), a copy of an assignment agreement showing that the invention disclosed in the application is assigned to the Rule 47(b) applicant, or a legal memorandum signed by an attorney familiar with the law of the jurisdiction stating that a court of competent jurisdiction would by the weight of authority in that jurisdiction award the title of the invention to the Rule 47(b) applicant;

As to item (6), Rule 47 applicant failed to provide proof of irreparable damage (see MPEP 409.03(g)). A statement by Rule 47 applicant that the filing is necessary to preserve the rights of the parties would be sufficient.

Further correspondence with respect to this matter should be addressed as follows:

By mail:
Mail Stop PETITION
Commissioner for Patents
Post Office Box 1450
Alexandria, VA 22313-1450

By hand:
U.S. Patent and Trademark Office
Customer Service Window, Mail Stop Petition
Randolph Building
401 Dulany Street
Alexandria, VA 22314

By FAX:
(571) 273-8300 - ATTN: Office of Petitions

Telephone inquiries should be directed to the undersigned at (571)272-3230.

Shirene Willis Brantley
Senior Petitions Attorney
Office of Petitions

UNITED STATES PATENT AND TRADEMARK OFFICE

Commissioner for Patents
United States Patent and Trademark Office
P.O. Box 1450
Alexandria, VA 22313-1450
www.uspto.gov

BAKER, DONELSON, BEARMAN, CALDWELL & BERKOWITZ
SUITE 900
FIVE CONCOURSE PARKWAY
ATLANTA GA 30328

COPY MAILED
OCT 13 2006
OFFICE OF PETITIONS

In re Application of	:	
Graham	:	DECISION NOTING JOINDER
Application No.: 29/255,712	:	OF INVENTOR & DISMISSING
Filed: March 10, 2006	:	PETITION UNDER 37 CFR 1.47(b)
Attorney Docket No.: 2786400-000426	:	AS MOOT
For: PEDESTAL		

Papers filed on August 7, 2006 (certificate of mailing date August 2, 2006) in reply to "Decision Refusing Status Under 37 CFR 1.47(b)" mailed on July 14, 2006, included a Declaration signed by the previously nonsigning inventor, William B. Graham, in compliance with 37 CFR 1.63.

In view of the joinder of the inventor, further consideration under 37 CFR 1.47(b) is moot; this application does not have any Rule 1.47(b) status and no such status should appear on the file wrapper. This application need not be returned to this office for any further consideration under 37 CFR 1.47(b).

After the mailing of this decision, the application will be returned to the Office of Initial Patent Examination for further processing.

Telephone inquiries should be directed to the undersigned at (571)272-3230.

Shirene Willis Brantley

Shirene Willis Brantley
Senior Petitions Attorney
Office of Petitions

UNITED STATES PATENT AND TRADEMARK OFFICE

Commissioner for Patents
United States Patent and Trademark Office
P.O. Box 1450
Alexandria, VA 22313-1450
www.uspto.gov

SHERR & VAUGHN, PLLC
620 HERNDON PARKWAY
SUITE 200
HERNDON, VA 20170

COPY MAILED

SEP 30 2008

OFFICE OF PETITIONS

In re Application of :
Erik Overgaard :
Application No. 29/255,728 : ON PETITION
Filed: March 9, 2006 :
Attorney Docket No. 403-0004 :

This is a decision on the petition, filed May 27, 2008, to revive the above-identified application under 37 CFR 1.137(b).

The petition is **DISMISSED**.

The application became abandoned for failure to submit formal drawings in a timely manner in reply to the Notice of Allowability, mailed January 14, 2008, which set a period for reply of three (3) months. Accordingly, this application became abandoned on April 15, 2008. A Notice of Abandonment was mailed on May 13, 2008. On May 27, 2008, the present petition was filed.

The petition is not signed by a registered patent attorney or patent agent of record. In fact, there is no indication that power of attorney documents have been submitted. However, in accordance with 37 CFR 1.34, the signature of Mr. Daniel H. Sherr appearing on the correspondence shall constitute a representation to the United States Patent and Trademark Office that he is authorized to represent the particular party in whose behalf he acts.

A grantable petition under 37 CFR 1.137(b)[1] must be accompanied by: (1) the required reply,[2] unless previously filed; (2) the petition fee as set forth in 37 CFR 1.17(m); (3) a statement that the entire delay in filing the required reply from the due date for the reply until the filing of a grantable petition pursuant to 37 CFR 1.137(b) was unintentional; and (4) any terminal disclaimer (and fee as set forth

[1] As amended effective December 1, 1997. See Changes to Patent Practice and Procedure; Final Rule Notice, 62 Fed. Reg. 53131, 53194-95 (October 10, 1997), 1203 Off. Gaz. Pat. Office 63, 119-20 (October 21, 1997).

[2] In a nonprovisional application abandoned for failure to prosecute, the required reply may be met by the filing of a continuing application. In an application or patent, abandoned or lapsed for failure to pay the issue fee or any portion thereof, the required reply must be the payment of the issue fee or any outstanding balance thereof.

in 37 CFR 1.20(d)) required by 37 CFR 1.137(c). Where there is a question as to whether either the abandonment or the delay in filing a petition under 37 CFR 1.137 was unintentional, the Commissioner may require additional information. See MPEP 711.03(c)(II)(C) and (D).

The petition lacks items 4 above. Since the above-identified application is a design application, 37 CFR 1.137(d) requires a terminal disclaimer dedicating to the public a terminal part of the term of any patent granted thereon equivalent to the period of abandonment of the application. The period of abandonment will be computed to be the number of months from the date of abandonment to the date of filing a grantable petition. A terminal disclaimer fee of $130 ($65 if small entity) is required. The terminal disclaimer must be signed in accordance with 37 CFR 1.321(b)(i).

Any request for reconsideration of this decision must be submitted within TWO (2) MONTHS from the mail date of this decision. Extensions of time under 37 CFR 1.136(a) are permitted. The reconsideration request should include a cover letter entitled "Renewed Petition under 37 CFR 1.137(b)." This is **not** a final agency action within the meaning of 5 U.S.C. ' 704.

Further correspondence with respect to this matter should be addressed as follows:

By mail: Mail Stop PETITION
Commissioner for Patents
Post Office Box 1450
Alexandria, VA 22313-1450

By hand: U.S. Patent and Trademark Office
Customer Service Window, Mail Stop PETITION
Randolph Building
401 Dulany Street
Alexandria, VA 22314

The centralized facsimile number is **(571) 273-8300**.

Any questions concerning this matter may be directed to the undersigned at (571) 272-3204.

Sherry D. Brinkley
Petitions Examiner
Office of Petitions

UNITED STATES PATENT AND TRADEMARK OFFICE

Commissioner for Patents
United States Patent and Trademark Office
P.O. Box 1450
Alexandria, VA 22313-1450
www.uspto.gov

SHERR & VAUGHN, PLLC
620 HERNDON PARKWAY
SUITE 200
HERNDON, VA 20170

COPY MAILED

JUN 17 2009

OFFICE OF PETITIONS

In re Application of
Erik Overgaard
Application No. 29/255,728
Filed: March 9, 2006
Attorney Docket No. 403-0004

ON PETITION

This is a decision on the renewed petition, filed May 6, 2009, under 37 CFR 1.137(b) to revive the above-identified application.

The petition is **GRANTED**.

The above-identified application became abandoned for failure to respond in a timely manner to the Notice of Allowability mailed January 14, 2008. On May 27, 2008, a petition under 37 CFR 1.137(b) was filed; however, the petition was dismissed in a decision mailed September 30, 2008. A renewed petition was filed on December 11, 2008 and subsequently dismissed by a decision mailed March 6, 2009. On May 6, 2007, the present petition was filed.

The present petition is found to complete the requirements of 37 CFR 1.137(b) and (d).

The terminal disclaimer filed December 11, 2008 is accepted and has been made of record. Any continuing application filed from this application must contain a copy of the terminal disclaimer. The copy of the terminal disclaimer must be filed with a cover letter requesting the terminal disclaimer be recorded on the continuing application. A copy of this decision should be attached to the cover letter.

The application is being referred to the Office of Data Management to be processed into a patent.

Telephone inquires related to this decision should be directed to the undersigned at (571) 272-3204. Telephone inquiries related to processing as a patent should be directed to (571) 272-4200.

Sherry D. Brinkley

Sherry D. Brinkley
Petitions Examiner
Office of Petitions

SPE RESPONSE FOR CERTIFICATE OF CORRECTION

Paper No.: _____

DATE : 4/22/08

TO SPE OF : **Technology Center** 2914 29/255773

SUBJECT : Request for Certificate of Correction on Patent No.: D557895 S

A response is requested with respect to the accompanying request for a certificate of correction.

Please complete this form and return with file, within 7 days to:
Palm location **7580, Certificates of Correction Branch – South Tower – 9A22**
If response is for an IFW, **return to employee (named below) via PUBSCofC Team in MADRAS.**
With respect to the change(s) requested, correcting Office and/or Applicant's errors, should the patent read as shown in the certificate of correction (COCIN)? No new matter should be introduced, nor should the scope or meaning of the claims be changed.

Thank You For Your Assistance

Elisha Evans
Certificates of Correction Branch
Tel. No. 703-308-9390 EXT 110

The request for issuing the above-identified correction(s) is hereby:
Note your decision on the appropriate box.

- [x] **Approved** — **All** changes apply.
- [ ] **Approved in Part** — Specify below which changes **do not** apply.
- [ ] **Denied** — State the reasons for denial below.

Comments:
When printing the 9 March 2006 views, PUBS is asked to please print the SCORE images. Thanks!

SPE

2914
Art Unit

PTOL-306 (REV. 7/03)
U.S. DEPARTMENT OF COMMERCE Patent and Trademark Office

UNITED STATES PATENT AND TRADEMARK OFFICE

Commissioner for Patents
United States Patent and Trademark Office
P.O. Box 1450
Alexandria, VA 22313-1450
www.uspto.gov

Paper No.

SNELL & WILMER LLP (OC)
600 ANTON BOULEVARD
SUITE 1400
COSTA MESA CA 92626

COPY MAILED

MAR 3 1 2008

OFFICE OF PETITIONS

In re Application of :
Shunji Tanaka et al. :
Application No. 29/255,886 :
Filed: March 13, 2006 :
Attorney Docket Number: 42610-9200 :
Title: MOTORCYCLE :

DECISION ON PETITION
UNDER 37 C.F.R. § 1.137(b)

This is a decision on the petition, pursuant to 37 C.F.R. § 1.137(b)[1], to revive the above-identified application, filed on August 8, 2007.

This petition is **DISMISSED**.

The above-identified application became abandoned for failure to submit the issue fee in a timely manner in reply to the Notice of Allowance and Issue Fee Due, mailed November 30, 2006, which set a shortened statutory period for reply of three months. No response was received, and no extensions of time are permitted for transmitting issue fees[2]. Accordingly, the above-identified

1 A grantable petition pursuant to 37 C.F.R. §1.137(b) must be accompanied by:
(1) The reply required to the outstanding Office action or notice, unless previously filed;
(2) The petition fee as set forth in § 1.17(m);
(3) A statement that the entire delay in filing the required reply from the due date for the reply until the filing of a grantable petition pursuant to this paragraph was unintentional. The Commissioner may require additional information where there is a question whether the delay was unintentional, and;
(4) Any terminal disclaimer (and fee as set forth in § 1.20(d)) required pursuant to paragraph (d) of this section.

2 See M.P.E.P. § 710.02(e).

application became abandoned on March 1, 2007. A Notice of Abandonment was mailed on July 31, 2007.

With this petition, Petitioner has included the issue and petition fees, along with the proper statement of unintentional delay.

Petitioner has met requirements (1) - (3) of Rule § 1.137(b). Regarding the fourth requirement, Petitioner has not included the required terminal disclaimer and fee. See 37 C.F.R §§ 1.137(b)(4) and (d).

Any reply must be submitted within **TWO MONTHS** from the mail date of this decision. Extensions of time under 37 C.F.R. § 1.136(a) are permitted. The reply should include a cover letter entitled "Renewed Petition pursuant to 37 C.F.R. § 1.137(b)". This is not a final agency action within the meaning of 5 U.S.C § 704.

The renewed petition should indicate in a prominent manner that the attorney handling this matter is Paul Shanoski, and may be submitted by mail[3], hand-delivery[4], or facsimile[5].

If responding by mail, Petitioner is advised not to place the undersigned's name on the envelope. Only the information that appears in the footnote should be included - adding anything else to the address will delay the delivery of the response to the undersigned.

Telephone inquiries regarding *this decision* should be directed to the undersigned at (571) 272-3225[6]. All other inquiries concerning examination procedures or status of the application should be directed to the Technology Center.

/Paul Shanoski/
Paul Shanoski
Senior Attorney
Office of Petitions

---

3 Mail Stop Petition, Commissioner for Patents, United States Patent and Trademark Office, P.O. Box 1450, Alexandria, VA, 22313-1450.
4 Customer Window, Randolph Building, 401 Dulaney Street, Alexandria, VA, 22314.
5 (571) 273-8300- please note this is a central facsimile number.
6 Petitioner will note that all practice before the Office should be in writing, and the action of the Office will be based exclusively on the written record in the Office. See 37 C.F.R. § 1.2. As such, Petitioner is reminded that no telephone discussion may be controlling or considered authority for any further action(s) of Petitioner.

UNITED STATES PATENT AND TRADEMARK OFFICE

Commissioner for Patents
United States Patent and Trademark Office
P.O. Box 1450
Alexandria, VA 22313-1450
www.uspto.gov

Paper No.

SNELL & WILMER LLP (OC)
600 ANTON BOULEVARD
SUITE 1400
COSTA MESA CA 92626

COPY MAILED

APR 11 2008

OFFICE OF PETITIONS

In re Application of	:	
Shunji Tanaka et al.	:	
Application No. 29/255,886	:	DECISION ON RENEWED PETITION
Filed: March 13, 2006	:	PURSUANT TO
Attorney Docket Number: 42610-9200	:	37 C.F.R. § 1.137(b)
Title: MOTORCYCLE	:	

This is a decision on the renewed petition, pursuant to 37 C.F.R. § 1.137(b)[1], to revive the above-identified application, filed on April 8, 2008.

This renewed petition is **GRANTED**.

The above-identified application became abandoned for failure to submit the issue fee in a timely manner in reply to the Notice of Allowance and Issue Fee Due, mailed November 30, 2006, which set a shortened statutory period for reply of three months. No response was received, and no extensions of time are permitted for transmitting issue fees[2]. Accordingly, the above-identified

1 A grantable petition pursuant to 37 C.F.R. §1.137(b) must be accompanied by:

(1) The reply required to the outstanding Office action or notice, unless previously filed;
(2) The petition fee as set forth in 37 C.F.R. § 1.17(m);
(3) A statement that the entire delay in filing the required reply from the due date for the reply until the filing of a grantable petition pursuant to this paragraph was unintentional. The Commissioner may require additional information where there is a question whether the delay was unintentional, and;
(4) Any terminal disclaimer (and fee as set forth in 37 C.F.R. § 1.20(d)) required pursuant to paragraph (d) of this section.

2 See M.P.E.P. § 710.02(e).

application became abandoned on March 1, 2007. A Notice of Abandonment was mailed on July 31, 2007.

An original petition was filed on August 8, 2007, and was dismissed via the mailing of a decision on March 31, 2008. The decision indicated, in pertinent part:

> With this petition, Petitioner has included the issue and petition fees, along with the proper statement of unintentional delay.
>
> Petitioner has met requirements (1) - (3) of Rule § 1.137(b). Regarding the fourth requirement, Petitioner has not included the required terminal disclaimer and fee (emphasis included). See 37 C.F.R §§ 1.137(b)(4) and (d).

With this renewed petition, Petitioner has submitted both the required terminal disclaimer and the associated fee.

The Office of Patent Publication will be notified of this decision so that the present application can be processed into a patent.

Telephone inquiries regarding *this decision* should be directed to the undersigned at (571) 272-3225[3]. All other inquiries concerning the status of the application should be directed to the Office of Patent Publication at 571-272-4200.

/Paul Shanoski/
Paul Shanoski
Senior Attorney
Office of Petitions

---

3 Petitioner will note that all practice before the Office should be in writing, and the action of the Office will be based exclusively on the written record in the Office. See 37 C.F.R. § 1.2. As such, Petitioner is reminded that no telephone discussion may be controlling or considered authority for any further action(s) of Petitioner.

UNITED STATES PATENT AND TRADEMARK OFFICE

Commissioner for Patents
United States Patent and Trademark Office
P.O. Box 1450
Alexandria, VA 22313-1450
www.uspto.gov

THE PROCTER & GAMBLE COMPANY
INTELLECTUAL PROPERTY DIVISION - WEST BLDG.
WINTON HILL BUSINESS CENTER - BOX 412
6250 CENTER HILL AVENUE
CINCINNATI OH 45224

COPY MAILED

MAY 31 2007

OFFICE OF PETITIONS

In re Application of	:	
William John Davis et al.	:	
Application No. 29/255,892	:	DECISION ON PETITION
Filed:	:	
Attorney Docket No.	:	

This is a decision on the petition under the unintentional provisions of 37 CFR 1.137(b), filed November 14, 2006, to revive the above-identified application.

The petition is **GRANTED**.

This application became abandoned for failure to timely pay the issue on or before September 14, 2006, as required by the Notice of Allowance and Fee(s) Due, mailed June 14, 2006. Accordingly, the date of abandonment of this application is September 15, 2006. The Notice of Abandonment letter was mailed October 26, 2006.

The petition satisfies the requirements of 37 CFR 1.137(b) in that petitioner has supplied (1) the reply in the form of payment of the issue fee of, (2) the petition fee of $1500 (3) a proper statement of unintentional delay, and (4) terminal disclaimer and fee.

37 CFR 1.137(b)(3) requires a statement that "the entire delay in filing the required reply from the due date for the reply until the filing of a grantable petition pursuant to 37 CFR 1.137(b) was unintentional." Since the statement appearing in the petition varies from the language required by 37 CFR 1.137(b)(3), the statement is being construed as the required statement. Petitioner must notify the Office if this is not a correct reading of the statement appearing in the petition.

Telephone inquiries concerning this decision should be directed to Terri Williams (571) 272-2991.

This application is being referred to Publishing Division for processing into a patent.

Liana Walsh
Petitions Examiner
Office of Petitions

UNITED STATES PATENT AND TRADEMARK OFFICE

UNITED STATES DEPARTMENT OF COMMERCE
United States Patent and Trademark Office
Address: COMMISSIONER FOR PATENTS
P.O. Box 1450
Alexandria, Virginia 22313-1450
www.uspto.gov

APPLICATION NO.	FILING DATE	FIRST NAMED INVENTOR	ATTORNEY DOCKET NO.	CONFIRMATION NO.
29/255,962	03/14/2006	Robert Boettcher	F-8999	2208

28107 7590 05/01/2008
JORDAN AND HAMBURG LLP
122 EAST 42ND STREET
SUITE 4000
NEW YORK, NY 10168

EXAMINER
RADEMAKER, CHARLES A

ART UNIT	PAPER NUMBER
2916	

MAIL DATE	DELIVERY MODE
05/01/2008	PAPER

Please find below and/or attached an Office communication concerning this application or proceeding.

The time period for reply, if any, is set in the attached communication.

UNITED STATES PATENT AND TRADEMARK OFFICE

Commissioner for Patents
United States Patent and Trademark Office
P.O. Box 1450
Alexandria, VA 22313-1450
www.uspto.gov

5-1-08

Jordan and Hamburg LLP
ATTN: C. Bruce Hamburg
122 East 42nd Street
New York, New York 10168

In re Application of: Robert Boettcher Serial No.: 29/255,962 Filed: March 14, 2006 Docket: F-8999 Title: FASTENING DEVICE FOR DENTAL PROSTHESES	DECISION ON PETITION TO INVOKE SUPERVISORY AUTHORITY UNDER 37 C.F.R. § 1.181

This is a decision on the petition 37 C.F.R. § 1.181(a)(3) filed on February 22, 2007 to invoke supervisory authority to have the examiner remove the determination that the declaration filed on March 14, 2006 is defective.

The petition is DISMISSED.

REGULATION AND PRACTICE

A grantable petition to invoke supervisory authority under 37 C.F.R. § 1.181 must, *inter alia*:
(1) Be from any action or requirement of any examiner in the *ex parte* prosecution of an application, or in ex parte or inter partes prosecution of a reexamination proceeding which is not subject to appeal to the Board of Patent Appeals and Interferences or to the court;
(2) Be to invoke the supervisory authority of the Director in appropriate circumstances.
(3) Contain a statement of the facts involved and the point or points to be reviewed and the action requested. Briefs or memoranda, if any, in support thereof should accompany or be embodied in the petition; and where facts are to be proven, the proof in the form of affidavits or declarations (and exhibits, if any) must accompany the petition.
(4) When a petition is taken from an action or requirement of an examiner in the *ex parte* prosecution of an application, or in the *ex parte* or *inter partes* prosecution of a reexamination proceeding, it may be required that there have been a proper request for reconsideration (§ 1.111) and a repeated action by the examiner.
(5) Where a fee is required for a petition to the Director the appropriate section of this part will so indicate. If any required fee does not accompany the petition, the petition will be dismissed.

(6) Oral hearing will not be granted except when considered necessary by the Director.
(7) The mere filing of a petition will not stay any period for reply that may be running against the application, nor act as a stay of other proceedings. Any petition under this part not filed within two months of the mailing date of the action or notice from which relief is requested may be dismissed as untimely, except as otherwise provided. This two-month period is not extendable.

REVIEW OF FACTS

In this case, the applicant has met requirements (1) through (6); however, the petition was received on February 22, 2007, more than two months after July 17, 2006, the mailing date of the notice from which relief is requested. Furthermore, the petition was received after abandonment of the application on January 17, 2007. Therefore, the petition is considered untimely.

DECISION

For the above-stated reasons, the petition is DISMISSED.

The instant petition was filed concurrently with a second petition to revive an unintentionally abandoned application under 37 CFR 1.137(b). The application will be forwarded to the Office of Petitions for a decision on that petition.

Any inquiry regarding this decision should be directed to Rob Spear, Design Practice Specialist, at (571) 272-2645.

Jacqueline M. Stone, Director,
Technology Center 2900

UNITED STATES PATENT AND TRADEMARK OFFICE

Commissioner for Patents
United States Patent and Trademark Office
P.O. Box 1450
Alexandria, VA 22313-1450
www.uspto.gov

JORDAN AND HAMBURG LLP
122 EAST 42ND STREET
SUITE 4000
NEW YORK NY 10168

COPY MAILED

MAY 1 3 2008

OFFICE OF PETITIONS

In re Application of :
Robert Boettcher :
Application No. 29/255,962 : DECISION ON PETITION
Filed: March 14, 2006 :
Attorney Docket No. F-8999 :

This is a decision on the petition under 37 CFR 1.137(b), filed February 22, 2007, to revive the above-identified design application.

The petition is **Dismissed**.

Any request for reconsideration must be submitted within TWO (2) MONTHS from the mail date of this decision. Extensions of time under 37 CFR 1.136(a) are permitted. The reconsideration request should include a cover letter entitled "Renewed Petition under 37 CFR 1.137(b)." This is **not** final agency action within the meaning of 5 U.S.C. §704.

The application became abandoned for failure to timely submit a new oath or declaration on or before October 17, 2006, as required by the Notice of Allowability, mailed July 17, 2006, which set a statutory period for reply of three (3) months. Accordingly, the application became abandoned on October 18, 2006. A Notice of Abandonment was mailed on February 13, 2007.

A grantable petition under 37 CFR 1.137(b) must be accompanied by: (1) the required reply, unless previously filed; (2) the petition fee as set forth in 37 CFR 1.17(m); (3) a statement that "the entire delay in filing the required reply from the due date for the reply until the filing of a grantable petition pursuant to 37 CFR 1.137(b) was unintentional"; and (4) any terminal disclaimer (and fee as set forth in 37 CFR 1.20(d)) required by 37 CFR 1.137(c). A terminal disclaimer and the $65 terminal disclaimer fee is required under 37 CFR 1.137(c) if the application is: (1) a design application, (2) a utility application filed before June 8, 1995, or (3) a plant application filed before June 8, 1995. Where there is a question as to whether either the abandonment or the delay in filing a petition under 37 CFR 1.137 was unintentional, the Director may require additional information. See MPEP 711.03 (c)(III)(c) and (D).

As to item (4), a terminal disclaimer and terminal disclaimer fee is required.

Further correspondence with respect to this matter should be addressed as follows:

By mail:	Mail Stop Petition Commissioner for Patents P.O. Box 1450 Alexandria, VA 22313-1450
By facsimile:	(571) 273-8300
By delivery service: (FedEx, UPS, DHL, etc.)	U.S. Patent and Trademark Office Customer Service Window, Randolph Building 401 Dulany Street Alexandria, VA 22314

Telephone inquiries concerning this matter should be directed to the undersigned at (571) 272-3215.

Charlema Grant
Petitions Attorney
Office of Petitions

UNITED STATES PATENT AND TRADEMARK OFFICE

Commissioner for Patents
United States Patent and Trademark Office
P.O. Box 1450
Alexandria, VA 22313-1450
www.uspto.gov

JORDAN AND HAMBURG LLP
122 EAST 42ND STREET
SUITE 4000
NEW YORK NY 10168

COPY MAILED

SEP 22 2008

OFFICE OF PETITIONS

In re Application of
Boettcher et al.
Application No. 29/255,962
Filed: March 14, 2006
Attorney Docket No. F-8999

ON PETITION

This is a decision on the renewed petition under 37 CFR 1.137(b), filed July 11, 2008, to revive the above-identified design application.

The petition is **GRANTED**.

The petition satisfies the requirements of 37 CFR 1.137(b) in that petitioner has supplied (1) the reply in the form of the $400 issue fee, (2) the petition fee of $750, (3) a proper statement of unintentional delay, and (4) a terminal disclaimer and fee as required by 37 CFR 1.137(d). Accordingly, the failure to timely submit a new declaration as required by the Notice of Allowability is accepted as being unintentionally delayed.

The terminal disclaimer is accepted and has been made of record. Any continuing application filed from this application must contain a copy of the terminal disclaimer. The copy of the terminal disclaimer must be filed with a cover letter requesting the terminal disclaimer be recorded on the continuing application. A copy of this decision should be attached to the cover letter.

This application is being referred to the Office of Data Management for further processing in accordance with this decision on petition.

Telephone inquiries concerning this decision should be directed to the undersigned at (571) 272-3215.

Charlema Grant
Petitions Attorney
Office of Petitions

UNITED STATES PATENT AND TRADEMARK OFFICE

COMMISSIONER FOR PATENTS
UNITED STATES PATENT AND TRADEMARK OFFICE
P.O. BOX 1450
ALEXANDRIA, VA 22313-1450
www.uspto.gov

Deborah Peacock
Peacock Myers, P.C.
P.O. Box 26927
Albuquerque, NM 87125-6927

COPY MAILED

NOV 28 2007

OFFICE OF PETITIONS

In re Patent No. D,542,665	:	
Issue Date: May 15, 2007	:	
Application No. 29/255,984	:	DECISION ON PETITION
Filed: March 13, 2006	:	
Patentee(s): Richard C. Poe, II	:	

This is a decision on the petitioner under 37 CFR 1.183 filed on August 20, 2007, which is being treated as a request under 37 CFR 3.81(b)[1] to add the name of the assignee on the front page of the above patent by way of a certificate of correction.

The petition is **dismissed**.

37 CFR 3.81(b) permits the patent to issue in the name of an assignee if the assignment was submitted after payment of the issue fee, but ***prior to issuance of a patent***.

Petitioner requests issuance of a Certificate of Correction to add "Dos Lunas Spirits, LLC, El Paso, Texas", as the name of the assignee. However, USPTO assignment records fail to show that an assignment listing the name of the assignee as "Dos Lunas Spirits, LLC" was recorded prior to issuance of the patent. Therefore, a Certificate of Correction would not be in order. *See MPEP Section 306.*

In view of the above, the $100 Certificate of Correction fee submitted on August 20, 2007 will be refunded to petitioner.

This application file is being referred to Files Repository.

Inquiries concerning this decision should be directed to the undersigned at (571) 272-3226.

Andrea Smith
Petitions Examiner
Office of Petitions

[1] *See* Official Gazette of June 22, 2004

621, 624 (D.D.C. 1985); Smith v. Diamond, 209 USPQ 1091 (D.D.C. 1981); Potter v. Dann, 201 USPQ 574 (D.D.C. 1978); Ex parte Murray, 1891 Dec. Comm'r Pat. 130, 131 (1891).

The petition under 37 CFR 1.181 to withdraw the holding of abandonment is **dismissed**.

Petitioner next requests consideration under 37 CFR 1.137(b). Applicant has submitted a proper reply in the form of corrected formal drawings, an acceptable statement of the unintentional nature of the delay in responding to the July 2, 2007 Notice of Allowability, a terminal disclaimer and required fee, and the petition fee.

Regarding the statement of delay found in the petition: The statement of unintentional delay presented in the petition does not comply with the current rule. 37 CFR 1.137(b)(3) requires a statement that "the entire delay in filing the required reply from the due date for the reply until the filing of a grantable petition pursuant to 37 CFR 1.137(b) was unintentional" be submitted. However, the statement presented will be accepted and construed as meaning that "the entire delay in filing the required reply from the due date for the reply until the filing of a grantable petition pursuant to 37 CFR 1.137(b) was unintentional." If this is an incorrect interpretation in view of the rules, petitioner is required to provide a statement to that effect.

Regarding fees, deposit account no. 13-3723 will be charged a $1,540.00 Rule 137(b) petition fee and a $130.00 terminal disclaimer fee.

The petition is **granted**.

This application is being forwarded to Publishing Division for consideration of the drawings filed on December 3, 2007 (certificate of mailing date November 29, 2007).

Telephone inquiries may be directed to the undersigned at (571) 272-3230.

Shirene Willis Brantley

Shirene Willis Brantley
Senior Petitions Attorney
Office of Petitions

UNITED STATES PATENT AND TRADEMARK OFFICE

Commissioner for Patents
United States Patent and Trademark Office
P.O. Box 1450
Alexandria, VA 22313-1450
www.uspto.gov

3M INNOVATIVE PROPERTIES COMPANY
PO BOX 33427
ST. PAUL MN 55133-3427

COPY MAILED

FEB 1 2 2008

OFFICE OF PETITIONS

In re Application of :
Carlson :
Application No. 29/256,017 :
Filed: June 21, 2005 :
Attorney Docket No. 61871US002 :
For: AIR PURIFIER

ON PETITION

This is a decision on the petition under 37 CFR 1.181 to withdraw the holding of abandonment in the above-identified application and, in the alternative, the petition under 37 CFR 1.137(b) to revive the above-identified application. Both petitions were filed in the same correspondence, filed December 3, 2007(certificate of mailing date November 29, 2007).

The petition under 37 CFR 1.181 is **DISMISSED**.

The petition under 37 CFR 1.137(b) is **GRANTED**.

This application was held abandoned for failure to timely reply to the Notice of Allowability, mailed July 2, 2007, which set a three (3) month non-extendable period to submit corrected drawings. No reply was received. Therefore, the application became abandoned on September 3, 2007. A Notice of Abandonment was mailed on October 30, 2007.

Petitioner requests withdrawal of the holding of abandoned based on the assertion that the requirement set in the Notice of Allowability was made in error and that no action was required.

As stated in the Notice of Allowabililty, "Applicant has THREE MONTHS FROM THE "MAILING DATE" of this communication to file a reply complying with the requirements noted below. Failure to timely comply will result in ABANDONMENT of this application."

Even if the requirements set in the Notice appeared to be made in error, a response was required within the time period set by the Notice.

A delay resulting from the lack of knowledge or improper application of the patent statute, rules of practice or the MPEP does not constitute an "unavoidable" delay. *See* Haines v. Quigg, 673 F. Supp. 314, 317, 5 USPQ2d 1130, 1132 (N.D. Ind. 1987), Vincent v. Mossinghoff, 230 USPQ

SPE RESPONSE FOR CERTIFICATE OF CORRECTION

Paper No.: _____

DATE : 02/10/07

TO SPE OF : ART UNIT 2915

SUBJECT : Request for Certificate of Correction for Appl. No.: **29/256046** Patent No.: **d530514**

Please respond to this request for a certificate of correction within 7 days.

Please review the requested changes/corrections as shown in the **COCIN** document(s) in the IFW application image. No new matter should be introduced, nor should the scope or meaning of the claims be changed.

Please complete the response (see below) and forward the completed response to scanning using document code **COCX**.

Angela Green
Certificates of Correction Branch
703.308.9380 ext.

Thank You For Your Assistance

The request for issuing the above-identified correction(s) is hereby:

Note your decision on the appropriate box.

- ☑ **Approved** — All changes apply.
- ☐ **Approved in Part** — Specify below which changes **do not** apply.
- ☐ **Denied** — State the reasons for denial below.

Comments: _____

_____

_____

_____

_____

Gary D. Watson — SPE

2915 — Art Unit

UNITED STATES PATENT AND TRADEMARK OFFICE

COMMISSIONER FOR PATENTS
UNITED STATES PATENT AND TRADEMARK OFFICE
P.O. BOX 1450
ALEXANDRIA, VA 22313-1450
www.uspto.gov

Paper No.

SCHWEGMAN, LUNDBERG, WOESSNER
& KLUTH, P.A.
P.O. BOX 2938
MINNEAPOLIS, MN 55402

COPY MAILED

AUG 24 2006

OFFICE OF PETITIONS

In re Application of	:	
Marksteen Adamson	:	DECISION ON PETITION
Application No. 29/256,048	:	
Filed: March 14, 2006	:	
Atty Docket No. 2207.001US1	:	

This is a decision on the "Petition under 1.53(e)(2)," filed June 13, 2006, requesting that the above-referenced application be accorded a filing date of March 14, 2006, with figures 30A, B and C considered part of the original application disclosure.

Application papers in the above-identified application were deposited on March 14, 2006. However, on April 10, 2006, the Initial Patent Examination Division mailed a NOTICE TO FILE MISSING PARTS OF NONPROVISIONAL APPLICATION notifying the applicant that the application papers had been accorded a filing date; however, figures 30A, B and C described in the specification appeared to have been omitted.

In response, applicant filed the instant petition, asserting that the figures were not omitted from the original application filing on March 14, 2006. In support thereof, applicant submits copies of their application transmittal and of their return postcard receipt. Applicant further cites 1.57, arguing that the omitted figures are present in UK Patent Application No. 05053103, which this application as filed claims the priority benefit of, and incorporates by reference in its entirety. Applicant states that a copy of the UK patent application is being submitted under separate cover.

A postcard receipt, which itemizes and properly identifies the items, which are being filed, serves as *prima facie* evidence of receipt in the Office of all items listed thereon on the date stamped thereon by the Office. However, the postcard receipt will not serve as *prima facie* evidence of receipt of any item, which is not adequately itemized on the postcard. See MPEP 503.

Petitioner's evidence and argument have been considered but not found persuasive. Petitioner's postcard receipt requests acknowledgment of receipt of "Drawings (22 sheets)." Petitioner admits that to be persuasive evidence of the drawing sheet containing figures 30A, 30B and 30C the postcard should have itemized 32 sheets of drawings. Petitioner contends that this is merely a typographical error. Unfortunately, this error is more significant. 32 sheets of drawings are not adequately itemized on the postcard. Given the itemization of 22 sheets of drawings, the postcard receipt is not persuasive evidence of the deposit of 32 sheets of drawings, or specifically figures 30A, 30B and 30C, on March 14, 2006.

In view thereof, the petition under 1.53(e)(2) is **DISMISSED**.

Petitioner has not established that the omitted figures were submitted on the original filing of the application. Nonetheless, new drawings may be entered by the primary examiner without petition so long as the new drawings contain no new matter. However, if applicant wishes to rely on § 1.57(a)(1) to enter the drawing figures, the petitioner must submit an amendment in compliance with §§ 1.57 and 1.121 within **TWO (2) MONTHS** of the mailing date of this decision. This period is not extendable. See 37 CFR 1.181(f), 37 CFR 1.57(f) and MPEP 608.01(p).

This application is being returned to the Office of Initial Patent Examination (OIPE) for completeness of pre-examination processing with a filing date of March 14, 2006, including an indication in Office records that 31 sheets of drawings were present on filing.

Telephone inquiries concerning this matter may be directed to the undersigned at (571) 272-3219.

Nancy Johnson
Senior Petitions Attorney
Office of Petitions

UNITED STATES PATENT AND TRADEMARK OFFICE

Commissioner for Patents
United States Patent and Trademark Office
P.O. Box 1450
Alexandria, VA 22313-1450
www.uspto.gov

HAND HELD PRODUCTS, INC.
700 VISIONS DRIVE
P.O. BOX 208
SKANEATELES FALLS, NY 13153-0208

COPY MAILED

JAN 25 2008

OFFICE OF PETITIONS

In re Application of	:	
Timothy Robert Fitch et al	:	
Application No. 29/256,055	:	ON PETITION
Filed: March 15, 2006	:	
Attorney Docket No. 2005007-1	:	

This is a decision on the petition filed September 21, 2007 under 37 CFR 1.137(b), to revive the above-identified application.

The petition is **GRANTED.**

The above-identified application became abandoned for failure to submit the Issue fee in a timely manner in reply to the Notice of Allowance mailed June 14, 2007, which set a statutory period for reply of three (3) months. Accordingly, the above-identified application became abandoned on September 15, 2007.

The petition satisfies the conditions for revival pursuant to the provisions of 37 CFR 1.137(b) in that (1) the reply in the form of payment of the Issue fee and Publication fee; (2) the petition fee; (3) the required statement of unintentional delay have been received and (4) Terminal Disclaimer. Accordingly, the issue fee is accepted as having been unintentionally delayed.

Telephone inquiries concerning this decision should be directed to the undersigned at (571) 272-3210.

This matter is being referred to the Publishing Division for further processing.

Irvin Dingle
Petitions Examiner
Office of Petitions

UNITED STATES PATENT AND TRADEMARK OFFICE

Commissioner for Patents
United States Patent and Trademark Office
P.O. Box 1450
Alexandria, VA 22313-1450
www.uspto.gov

HONEYWELL INTERNATIONAL INC.
PATENT SERVICES
101 COLUMBIA ROAD
P.O. BOX 2245
MORRISTOWN, NJ 07962-2245

MAILED

OCT 23 2009

OFFICE OF PETITIONS

ON PETITION

In re Application of
Timothy Robert Fitch et al
Application No. 29/256,055
Filed: March 15, 2006
Attorney Docket No. 2005007-1

This is a decision on the renewed petition under 37 CFR 1.137(b), filed April 7, 2008, to revive the above-identified application.

The petition is **DISMISSED AS MOOT**.

Office record show no corrected decision has been mailed for the above-identified application. Therefore, the petition as filed in this case is moot.

The petition is also moot in view of the grant petition decision of January 25, 2008 and that no new declaration is required per Duty of Disclosure Languange Set Forth in Oaths or Declarations Filed in Nonprovisional Patent Applications 1327 O.G. 112 (12 February 2008).

The file does not indicate a change of address has been submitted, although the address given on the petition differs from the address of record. If appropriate, a change of address should be filed in accordance with MPEP 601.03. A courtesy copy of this decision is being mailed to the address given on the petition; however, the Office will mail all future correspondence solely to the address of record.

Telephone inquiries concerning this decision should be directed to Irvin Dingle at (571) 272-3210.

Irvin Dingle
Petitions Examiner
Office of Petitions

cc: Hand Held Products, Inc.
700 Visions Drive
P.O. Box 208
Skaneateles Falls, NY 13153-0208

UNITED STATES PATENT AND TRADEMARK OFFICE

Commissioner for Patents
United States Patent and Trademark Office
P.O. Box 1450
Alexandria, VA 22313-1450
www.uspto.gov

HAND HELD PRODUCTS, INC.
700 VISIONS DRIVE
P.O. BOX 208
SKANEATELES FALLS, NY 13153-0208

COPY MAILED

JAN 29 2008

OFFICE OF PETITIONS

In re Application of	:	
Timothy Robert Fitch et al	:	
Application No. 29/256,056	:	ON PETITION
Filed: March 15, 2006	:	
Attorney Docket No. 2005007-2	:	

This is a decision on the petition filed September 21, 2007 under 37 CFR 1.137(b), to revive the above-identified application.

The petition is **GRANTED.**

The above-identified application became abandoned for failure to submit the Issue fee in a timely manner in reply to the Notice of Allowance mailed June 14, 2007, which set a statutory period for reply of three (3) months. Accordingly, the above-identified application became abandoned on September 15, 2007.

The petition satisfies the conditions for revival pursuant to the provisions of 37 CFR 1.137(b) in that (1) the reply in the form of payment of the Issue fee and Publication fee; (2) the petition fee; and (3) the required statement of unintentional delay have been received and (4) Terminal Disclaimer. Accordingly, the issue fee is accepted as having been unintentionally delayed.

Telephone inquiries concerning this decision should be directed to the undersigned at (571) 272-3210.

This matter is being referred to the Publishing Division for further processing.

Irvin Dingle
Petitions Examiner
Office of Petitions

UNITED STATES PATENT AND TRADEMARK OFFICE

Commissioner for Patents
United States Patent and Trademark Office
P.O. Box 1450
Alexandria, VA 22313-1450
www.uspto.gov

HAND HELD PRODUCTS, INC.
700 VISIONS DRIVE
P.O. BOX 208
SKANEATELES FALLS, NY 13153-0208

COPY MAILED
FEB 05 2008
OFFICE OF PETITIONS

In re Application of	:	
Timothy Robert Fitch et al	:	
Application No. 29/256,056	:	ON PETITION
Filed: March 15, 2006	:	
Attorney Docket No. 2005007-2	:	

CORRECTED DECISION

This is a decision on the petition, filed September 21, 2007 under 37 CFR 1.137(b) to revive the above-identified application.

The petition is **DISMISSED.**

Any request for reconsideration of this decision must be submitted within TWO (2) MONTHS from the mail date of this decision. Extensions of time under 37 CFR 1.136(a) are permitted. The reconsideration request should include a cover letter entitled "**Renewed Petition under 37 CFR 1.137(b)**." This is **not** final agency action within the meaning of 5 U.S.C. § 704.

The above-identified application became abandoned for failure to submit the Issue fee and a substitute Oath or Declaration in a timely manner in reply to the Notice of Allowance mailed June 14, 2007, which set a statutory period for reply of three (3) months. Accordingly, the above-identified application became abandoned on September 15, 2007.

A grantable petition under 37 CFR 1.137(b) must be accompanied by: (1) the required reply, unless previously filed; (2) the petition fee as set forth in 37 CFR 1.17(m); (3) a statement that the entire delay in filing the required reply from the due date for the reply until the filing of a grantable petition pursuant to 37 CFR 1.137(b) was unintentional; and (4) any terminal disclaimer (and fee as set forth in 37 CFR 1.20(d)) required by 37 CFR 1.137(c). Where there is a question as to whether either the abandonment or the delay in filing a petition under 37 CFR 1.137 was unintentional, the Commissioner may require additional information. See MPEP 711.03(c)(III)(C) and (D). The instant petition lack(s) item(s) (1).

The petition does not satisfies the conditions for revival pursuant to the provisions of 37 CFR 1.137(b) in that (1) a substitute Oath or Declaration was not received. The issue fee has been paid. Accordingly, this petition can not be revive until a substitute Oath or Declaration is received.

The decision mailed January 29, 2008 is hereby vacated as of the mail date of this decision.

Further correspondence with respect to this matter should be addressed as follows:

By mail: Mail Stop PETITION
Commissioner for Patents
Post Office Box 1450
Alexandria, VA 22313-1450

By hand: Customer Service Window
Randolph Building
401 Dulany Street
Alexandria, VA 22314

By facsimile: (571) 273-8300
ATTN: Office of Petitions

Telephone inquiries concerning this decision should be directed to the undersigned at (571) 272-3210.

Irvin Dingle
Petitions Examiner
Office of Petitions

UNITED STATES PATENT AND TRADEMARK OFFICE

Commissioner for Patents
United States Patent and Trademark Office
P.O. Box 1450
Alexandria, VA 22313-1450
www.uspto.gov

HONEYWELL/HISCOCK
PATENT SERVICES
101 COLUMBIA ROAD
P.O. BOX 2245
MORRISTOWN, NJ 07962-2245

MAILED

MAR 23 2010

OFFICE OF PETITIONS

In re Application of
Timothy Robert Fitch et al
Application No. 29/256,056
Filed: March 15, 2006
Attorney Docket No. H28254

ON PETITION

This is a decision on the petition filed November 12, 2009, which is being treated as a renewed petition under 37 CFR 1.137(b), to revive the above-identified application.

The petition is **GRANTED.**

The petition satisfies the conditions for revival pursuant to the provisions of 37 CFR 1.137(b) in that (1) the reply in the form of payment of the Issue fee; (2) the petition fee; (3) the required statement of unintentional delay (4) Terminal Disclaimer and (5) Substitute Oath or Declaration have been received. Accordingly, the issue fee is accepted as having been unintentionally delayed.

The file does not indicate a change of address has been submitted, although the address given on the petition differs from the address of record. If appropriate, a change of address should be filed in accordance with MPEP 601.03. A courtesy copy of this decision is being mailed to the address given on the petition; however, the Office will mail all future correspondence solely to the address of record.

Telephone inquiries concerning this decision should be directed to the undersigned at (571) 272-3210.

This matter is being referred to the Office of Data Management for further processing.

Irvin Dingle
Petitions Examiner
Office of Petitions

cc: Richard A. Romanchik
2000 HSBC Plaza
100 Chestnut St.
Rochester, NY 14604-2404

PTO/SB/27 (09-04)
Approved for use through 07/31/2006. OMB 0651-0031
U.S. Patent and Trademark Office; U.S DEPARTMENT OF COMMERCE
Under the Paperwork Reduction ACT of 1995, no persons are required to respond to collection of information unless it displays a valid OMB control number.

113000 U.S. PTO
29/256105
031506

REQUEST FOR EXPEDITED EXAMINATION OF A DESIGN APPLICATION (37 CFR 1.155)

Application Number	To be assigned
Filing Date	To be assigned
First Named Inventor	E. Scott Morris
Title	PORTION OF A SHOE UPPER
Attorney Docket Number	2465-7573US

ADDRESS TO:
MAIL STOP EXPEDITED DESIGN
COMMISSION FOR PATENTS
P.O. BOX 1450
Alexandria, VA 22313-1450

Approved 4-6-06
Jacqueline M. Stone
Jacqueline M. Stone, Director
Technology Center 1700

This is a request for expedited examination of a design application under 37 CER 1.155.

NOTE: If the Request made by this form accompanies original application papers, include form PTO/SB/18 "Design Patent Application Transmittal" or its equivalent.

A preexamination search was conducted. The field of search was:

US. CL. D2/896, D2/897, D2/902, D2/907, D2/908, D2/910 D2/911, D2/912, D2/916, D2/922, D2/935, D2/969, D2/970, D2/971, D2/972, 36/45, 36/50.1, 36/83, 36/88, 36/89, 36/93, 36/101, 36/102, 36/103, 36/104, 36/106, 36/108, 36/109, 36/113, 36/114, 36/115, 36/116, 36/126, 36/127, 36/128, 36/129, 36/130

Related applications: _____

If not previously filed for the above-identified application, the following items required by 37 CFR 1.155 are enclosed:

- Formal drawings (see 37 CFR 1.84).
- The fee set forth in 37 CFR 1.17(k).
- An information disclosure statement in compliance with 37 CFR 1.98.

Signature — Date: 15 March 2006

Laurence B. Bond — Typed or printed name

30,549 — Registration Number, if applicable

(801) 532-1922 — Telephone Number

WARNING: Information on this form may become public. Credit card information should not be included on this form. Provide credit card information and authorization on PTO-2038.

This collection of information is required by37 CFR 1.155. The information is required to obtain or retain a benefit by the public which is to file (and by the USPTO to process) an application. Confidentiality is governed by 35 U.S.C. 122 and 37 CFR 1.11 and 1.14. This collection is estimated to take 6 minutes to complete, including gathering, preparing, and submitting the completed application form to the USPTO. Time will vary depending upon the individual case. Any comments on the amount of time you require to complete this form and/or suggestions for reducing this burden, should be sent to the Chief Information Officer, U.S. Patent and Trademark Office, U.S. Department of Commerce, P.O. Box 1450, Alexandria, VA 22313-1450. DO NOT SEND FEES OR COMPLETED FORMS TO THIS ADDRESS. SEND TO: Commissioner for Patents, P.O. Box 1450, Alexandria, VA 22343-1450.
If you need assistance in completing the form, call 1-800-PTO-9199 and select option 2.

03/20/2006 MWOLDGE1 00000082 29256105
04 FC:1802 900.00 OP

UNITED STATES PATENT AND TRADEMARK OFFICE

Commissioner for Patents
United States Patent and Trademark Office
P.O. Box 1450
Alexandria, VA 22313-1450
www.uspto.gov

COPY MAILED
JUL 12 2006
OFFICE OF PETITIONS

DAVIS & BUJOLD, P.L.L.C.
112 PLEASANT STREET
CONCORD NH 03301

In re Application of BECHTEL et al. Application No. 29/256,249 Filed: March 7, 2006 Attorney Docket No. METPAT D03AUS	: : : : :	DECISION DISMISSING PETITION

This is a decision on the petition filed March 29, 2006, requesting that the above-identified application be accorded a filing date of March 7, 2006.

A review of the file record shows that USPTO records reflect the filing date for U.S. Application No. 29/256,249 is March 7, 2006.[1] An Official Filing Receipt showing a filing date of March 7, 2006 for the above-identified application was mailed to applicant on April 18, 2006 and is enclosed with this decision.

In view of the above, the petition is **DISMISSED AS MOOT**

This application file is being referred to Group Art Unit 2913 for further processing.

Telephone inquiries relating to this decision should be directed Denise Pothier at (571) 272-4787. Telephone inquiries related to OIPE processing should be directed to their hotline at (571) 272-4000.

Frances Hicks
Petitions Examiner
Office of Petitions

enc: Filing Receipt mailed April 18, 2006 for U.S. Application No. 29/256,249

cc: DAVIS & BUJOLD, P.L.L.C.
FOURTH FLOOR
500 COMMERCIAL ST.
MANCHESTER, NH 03101-1151

[1] The UPC barcode on applicants' postcard receipt and several other documents erroneously has "030806." Other documentation, including the filing receipt, accorded the above-identified application a filing date of March 7, 2006.

DECLARATION IN SUPPORT OF

PETITION TO MAKE SPECIAL BECAUSE OF APPLICANT'S AGE

Serial # 29/256289
Filed 3-20-06

A.U. 2913

P.O. Box 3913
Costa Mesa, California 92628
Robert L. Rich - Inventor

am

☒ the inventor

☐ have the following interest or relationship to the above identified invention

_____

_____

hereby declare the following:

My Date of Birth is 10-28-1921, and my current age is ~~82~~ 85 years.

RLR

I hereby declare that all statements made herein of my own knowledge are true and that all statements made on information and belief are believed to be true; and further that these statements were made with the knowledge that willful false statements and the like so made are punishable by fine or imprisonment, or both, under Section 1001 of Title 18 of the United States Code, and that such willful false statements may jeopardize the validity of the application or any patent issued thereon.

Dated: MARCH 3, 2006

Robert L. Rich

Robert L. Rich

550-20-4862

APR 27 2006

PETITION GRANTED

BEST AVAILABLE

William Krynski,
Special Program Examiner
Technology Center 1700

APR 27 2006

SPE RESPONSE FOR CERTIFICATE OF CORRECTION

Paper No.: 20071025

DATE : 25 October 2007

TO SPE OF : ART UNIT 2911

SUBJECT : Request for Certificate of Correction on Patent No.: D532,584

A response is requested with respect to the accompanying request for a certificate of correction.

Please complete this form and return with file, within **7** days to:
Certificates of Correction Branch - ST (South Tower) 9A22
Palm location **7590** - Tel. No. (703) 305-8309

With respect to the change(s) requested, correcting Office and/or Applicant's errors, should the patent read as shown in the certificate of correction? No new matter should be introduced, nor should the scope or meaning of the claims be changed.

Thank You For Your Assistance **Certificates of Correction Branch**

The request for issuing the above-identified correction(s) is hereby:

Note your decision on the appropriated box.

☒ **Approved** All changes apply.

☐ **Approved in Part** Specify below which changes **do not** apply.

☐ **Denied** State the reasons for denial below.

Comments:

CATHRON C. BROOKS
SUPERVISORY PATENT EXAMINER

SPE: Art Unit 2911

UNITED STATES PATENT AND TRADEMARK OFFICE

Commissioner for Patents
United States Patent and Trademark Office
P.O. Box 1450
Alexandria, VA 22313-1450
www.uspto.gov

QUARLES & BRADY LLP
411 E. WISCONSIN AVENUE, SUITE 2040
MILWAUKEE, WI 53202-4497

COPY MAILED

APR 1 8 2008

OFFICE OF PETITIONS

In re Application of	:	
Elise A. Sutopo	:	
Application No. 29/256,354	:	ON PETITION
Filed: March 17, 2006	:	
Attorney Docket No. 550299.00146	:	

This is a decision on the petition filed November 23, 2007 under 37 CFR 1.137(b), to revive the above-identified application.

The petition is **GRANTED.**

The above-identified application became abandoned for failure to submit the Issue fee in a timely manner in reply to the Notice of Allowance mailed June 25, 2007, which set a statutory period for reply of three (3) months. Accordingly, the above-identified application became abandoned on September 26, 2007.

The petition satisfies the conditions for revival pursuant to the provisions of 37 CFR 1.137(b) in that (1) the reply in the form of payment of the Issue fee; (2) the petition fee; and (3) the required statement of unintentional delay have been received. Accordingly, the issue fee is accepted as having been unintentionally delayed.

Telephone inquiries concerning this decision should be directed to the undersigned at (571) 272-3210.

This matter is being referred to the Publishing Division for further processing.

Irvin Dingle
Petitions Examiner
Office of Petitions

UNITED STATES PATENT AND TRADEMARK OFFICE

Commissioner for Patents
United States Patent and Trademark Office
P.O. Box 1450
Alexandria, VA 22313-1450
www.uspto.gov

HEWLETT PACKARD COMPANY
P O BOX 272400, 3404 E. HARMONY ROAD
INTELLECTUAL PROPERTY ADMINISTRATION
FORT COLLINS, CO 80527-2400

COPY MAILED

JAN 0 7 2008

OFFICE OF PETITIONS

In re Application of

Ballard, et al.

Application No. 29/256,413

Filing Date: March 20, 2006

Attorney Docket No. 200502906-1

ON PETITION

This is a decision on the petition under 37 CFR §1.137(b), filed October 25, 2007, in the above-identified application.

The petition is **dismissed**.

Any request for reconsideration of this decision must be submitted within TWO (2) MONTHS from the mail date of this decision. Extensions of time under 37 CFR 1.136(a) are permitted. The reconsideration request should include a cover letter entitled "Renewed Petition" under 37 CFR 1.137(b)."

This application became abandoned for failure to respond in a timely manner to the Notice of Allowability mailed April 2, 2007. The notice allowed a statutory period for reply of three months from its mailing date. No reply was received within the allowable period, and the application became abandoned on July 3, 2007. A Notice of Abandonment was mailed on August 22, 2007.

Effective December 1, 1997, the provisions of 37 CFR 1.137(b) now provide that where the delay in reply was unintentional, a petition may be filed to revive an abandoned application or a lapsed patent pursuant to 37 CFR 1.137(b). A grantable petition pursuant to 37 CFR 1.137(b) must be accompanied by:

(1) the required reply, unless previously filed. In a non-provisional application abandoned for failure to prosecute, the required reply may be met by the filing of a continuing application. In an application or patent, abandoned or lapsed for failure to pay the issue fee, or any portion thereof, the required reply must be the payment of the issue fee or any outstanding balance thereof.

(2) the petition fee as set forth in 37 CFR 1.17(m);

(3) a statement that the entire delay in filing the required reply from the due date for the reply until the filing of a grantable petition pursuant to 37 CFR 1.137(b) was unintentional. The Commissioner may require additional information where there is a question whether the delay was unintentional; and

(4) any terminal disclaimer (and fee set forth in 37 CFR 1.20(d)) required pursuant to 37 CFR 1.137(d).

The instant petition does not satisfy the requirements of item (4) above.

As to item (4), the terminal disclaimer was not found with the petition papers. The subject application is a design application, therefore; a terminal disclaimer is required in order to revive the application. Any renewed petition filed must be accompanied by the completed terminal disclaimer form, which is enclosed for petitioner's convenience. Pursuant to 37 CFR 1.137(d), the terminal disclaimer must dedicate to the public a terminal part of the term of any patent granted from this application that is equivalent to the period of abandonment of the application.

The petition fee of $1540.00 will be charged to deposit account 08-2025.

Further correspondence with respect to this matter should be addressed as follows:

By mail: Mail Stop Petitions
Commissioner for Patents
United States Patent and Trademark Office
Box 1450
Alexandria, VA 22313-1450

By facsimile: (571) 273-8300

Telephone inquiries concerning this matter may be directed to the undersigned at (571) 272-3222.

Kenya A. McLaughlin
Petitions Attorney
Office of Petitions

Enclosure: "Terminal Disclaimer to Accompany Petition"

PTO/SB/63 (12-07)
Approved for use through 12/31/2007. OMB 0651-0031
U.S. Patent and Trademark Office; U.S. DEPARTMENT OF COMMERCE
Under the Paperwork Reduction Act of 1995, no persons are required to a collection of information unless it displays a valid OMB control number.

TERMINAL DISCLAIMER TO ACCOMPANY PETITION	Docket Number (Optional)

In re Application of:

Name:

Application Number:

Filed:

For:

The owner*, _____ of _____ percent interest in the above-identified application hereby disclaims a terminal part of the term of any patent granted the above-identified application equivalent to: (1) if the above-identified application is a design application, the period of abandonment of the above-identified application, and (2) if the above-identified application is a utility or plant application, the lesser of: (a) the period of abandonment of the application; or (b) the period extending beyond twenty years from the date on which the above-identified application was filed in the United States or, if the application contains a specific reference to an earlier filed application(s) under 35 U.S.C. 120, 121, or 365(c), from the date on which the earliest such application was filed. This disclaimer also applies to any patent granted on a utility or plant application filed before June 8, 1995, or a design application, that contains a specific reference under 35 U.S.C. 120, 121, or 365(c) to the above-identified application. This disclaimer is binding upon the grantee, and its successors or assigns.

Check either box 1 or 2 below, if appropriate.

1. ☐ For submissions on behalf of an organization (e.g., corporation, partnership, university, government agency, etc.), the undersigned is empowered to act on behalf of the organization.

2. ☐ The undersigned is an attorney or agent of record. Registration Number_____.

_____	_____
Signature	Date
_____	_____
Typed or Printed Name	Telephone Number

☐ Terminal disclaimer fee under 37 CFR 1.20(d) included.

WARNING: Information on this form may become public. Credit card information should not be included on this form. Provide credit card information and authorization on PTO-2038.

* Statement under 37 CFR 3.73(b) is required if terminal disclaimer is signed by the assignee (owner). Form PTO/SB/96 may be used for making this certification. See MPEP § 324.

This collection of information is required by 37 CFR 1.137. The information is required to obtain or retain a benefit by the public which is to file (and by the USPTO to process) an application. Confidentiality is governed by 35 U.S.C. 122 and 37 CFR 1.11 and 1.14. This collection is estimated to take 12 minutes to complete, including gathering, preparing, and submitting the completed application form to the USPTO. Time will vary depending upon the individual case. Any comments on the amount of time you require to complete this form and/or suggestions for reducing this burden, should be sent to the Chief Information Officer, U.S. Patent and Trademark Office, U.S. Department of Commerce, P.O. Box 1450, Alexandria, VA 22313-1450. DO NOT SEND FEES OR COMPLETED FORMS TO THIS ADDRESS. **SEND TO: Commissioner for Patents, P.O. Box 1450, Alexandria, VA 22313-1450.**

If you need assistance in completing the form, call 1-800-PTO-9199 and select option 2.

Privacy Act Statement

The **Privacy Act of 1974 (P.L. 93-579)** requires that you be given certain information in connection with your submission of the attached form related to a patent application or patent. Accordingly, pursuant to the requirements of the Act, please be advised that: (1) the general authority for the collection of this information is 35 U.S.C. 2(b)(2); (2) furnishing of the information solicited is voluntary; and (3) the principal purpose for which the information is used by the U.S. Patent and Trademark Office is to process and/or examine your submission related to a patent application or patent. If you do not furnish the requested information, the U.S. Patent and Trademark Office may not be able to process and/or examine your submission, which may result in termination of proceedings or abandonment of the application or expiration of the patent.

The information provided by you in this form will be subject to the following routine uses:

1. The information on this form will be treated confidentially to the extent allowed under the Freedom of Information Act (5 U.S.C. 552) and the Privacy Act (5 U.S.C 552a). Records from this system of records may be disclosed to the Department of Justice to determine whether disclosure of these records is required by the Freedom of Information Act.
2. A record from this system of records may be disclosed, as a routine use, in the course of presenting evidence to a court, magistrate, or administrative tribunal, including disclosures to opposing counsel in the course of settlement negotiations.
3. A record in this system of records may be disclosed, as a routine use, to a Member of Congress submitting a request involving an individual, to whom the record pertains, when the individual has requested assistance from the Member with respect to the subject matter of the record.
4. A record in this system of records may be disclosed, as a routine use, to a contractor of the Agency having need for the information in order to perform a contract. Recipients of information shall be required to comply with the requirements of the Privacy Act of 1974, as amended, pursuant to 5 U.S.C. 552a(m).
5. A record related to an International Application filed under the Patent Cooperation Treaty in this system of records may be disclosed, as a routine use, to the International Bureau of the World Intellectual Property Organization, pursuant to the Patent Cooperation Treaty.
6. A record in this system of records may be disclosed, as a routine use, to another federal agency for purposes of National Security review (35 U.S.C. 181) and for review pursuant to the Atomic Energy Act (42 U.S.C. 218(c)).
7. A record from this system of records may be disclosed, as a routine use, to the Administrator, General Services, or his/her designee, during an inspection of records conducted by GSA as part of that agency's responsibility to recommend improvements in records management practices and programs, under authority of 44 U.S.C. 2904 and 2906. Such disclosure shall be made in accordance with the GSA regulations governing inspection of records for this purpose, and any other relevant (*i.e.*, GSA or Commerce) directive. Such disclosure shall not be used to make determinations about individuals.
8. A record from this system of records may be disclosed, as a routine use, to the public after either publication of the application pursuant to 35 U.S.C. 122(b) or issuance of a patent pursuant to 35 U.S.C. 151. Further, a record may be disclosed, subject to the limitations of 37 CFR 1.14, as a routine use, to the public if the record was filed in an application which became abandoned or in which the proceedings were terminated and which application is referenced by either a published application, an application open to public inspection or an issued patent.
9. A record from this system of records may be disclosed, as a routine use, to a Federal, State, or local law enforcement agency, if the USPTO becomes aware of a violation or potential violation of law or regulation.

UNITED STATES PATENT AND TRADEMARK OFFICE

Commissioner for Patents
United States Patent and Trademark Office
P.O. Box 1450
Alexandria, VA 22313-1450
www.uspto.gov

HEWLETT PACKARD COMPANY
P O BOX 272400, 3404 E. HARMONY ROAD
INTELLECTUAL PROPERTY ADMINISTRATION
FORT COLLINS, CO 80527-2400

COPY MAILED

AUG 14 2009

OFFICE OF PETITIONS

In re Application of

Ballard, et al.

Application No. 29/256,413

Filing Date: March 20, 2006

Attorney Docket No. 200502906-1

ON PETITION

This is a decision on the renewed petition under 37 CFR 1.137(b), filed February 13, 2008, to revive the above-identified application.

The petition under 37 CFR 1.137(b) is **GRANTED**.

This application became abandoned for failure to respond in a timely manner to the Notice of Allowability mailed April 2, 2007. The notice allowed a statutory period for reply of three months from its mailing date. No reply was received within the allowable period, and the application became abandoned on July 3, 2007. A Notice of Abandonment was mailed on August 22, 2007.

The terminal disclaimer, filed February 13, 2008, is noted.

The issue fee payment is noted as being received on June 18, 2007.

The application is being forwarded to the Office of Data Management for further processing.

Telephone inquiries concerning this decision should be directed to the undersigned at (571) 272-3222.

Kenya A. McLaughlin
Petitions Attorney
Office of Petitions

PTO/SB/27 (09-04)
Approved for use through 07/31/2006. OMB 0651-0031
U.S. Patent and Trademark Office; U.S DEPARTMENT OF COMMERCE
Under the Paperwork Reduction ACT of 1995, no persons are required to respond to collection of information unless it displays a valid OMB control number.

REQUEST FOR EXPEDITED EXAMINATION OF A DESIGN APPLICATION (37 CFR 1.155)

Application Number	
Filing Date	
First Named Inventor	Anil K. Malhi
Title	CIGAR HOLDER
Atty Docket Number	06-15412

ADDRESS TO:
MAIL STOP EXPEDITED DESIGN
COMMISSIONER FOR PATENTS
P.O. Box 1450
Alexandria, VA 22313-1450

Approved
4-11-06 Jacqueline M. Stone
Jacqueline M. Stone, Director
Technology Center 1700

113006 U.S.PTO
29/256439
032106

This is a request for expedited examination of a design application under 37 CFR 1.155.

NOTE: If the Request made by this form accompanies original application papers, include form PTO/SB/18 "Design Patent Application Transmittal" or its equivalent.

A preexamination search was conducted. The field of search was:

Design Class 27 Subclass 172,183,186,189,192,193
Class 206 Subclasses 271,275,276,277
Class 131 Subclasses 187,189,361

Related applications: _____

If not previously filed for the above-identified application, the following items required by 37 CFR 1.155 are enclosed:

- Formal drawings (see 37 CFR 1.84).
- The fee set forth in 37 CFR 1.17(k).
- An information disclosure statement in compliance with 37 CFR 1.98.

Signature: _____ Date: 3/20/06

Robert J. Lauson
Typed or printed name

41,930
Registration Number, if applicable

310-546-8170
Telephone Number

WARNING: Information on this form may become public. Credit card information should not be included on this form. Provide credit card information and authorization on PTO-2038.

This collection of information is required by 37 CFR 1.155. The information is required to obtain or retain a benefit by the public which is to file (and by the USPTO to process) an application. Confidentiality is governed by 35 U.S.C. 122 and 37 CFR 1.11 and 1.14. This collection is estimated to take 6 minutes to complete, including gathering, preparing, and submitting the completed application form to the USPTO. Time will vary depending upon the individual case. Any comments on the amount of time you require to complete this form and/or suggestions for reducing this burden, should be sent to the Chief Information Officer, U.S. Patent and Trademark Office, U.S. Department of Commerce, P.O. Box 1450, Alexandria, VA 22313-1450. DO NOT SEND FEES OR COMPLETED FORMS TO THIS ADDRESS. SEND TO: Commissioner for Patents, P.O. Box 1450, Alexandria, VA 22313-1450.

If you need assistance in completing the form, call 1-800-PTO-9199 and select option 2.

03/23/2006 LWONDTN1 00000047 29256439
04 FC:1802 900.00 OP

RECEIVED
CENTRAL FAX CENTER
JUN 14 2006

CERTIFICATE OF MAILING OR TRANSMISSION BY FACSIMILE
I hereby certify that this correspondence is being deposited with the United States Postal Service with sufficient postage as first class mail in an envelope addressed to: Commissioner for Patents, P.O. Box 1450, Alexandria, VA 22313-1450 or facsimile transmitted to the U.S. Patent and Trademark Office on the date shown below to Fax Number 571-273-8300
Date: 6/14/06

Olimpia Jakubowska-Wrobel

PATENTS

IN THE UNITED STATES PATENT AND TRADEMARK OFFICE

SPECIAL PROCEDURE SUBMISSION

06/15/2006 SSITHIB1 00000014 141263 29256440
01 FC:1802 900.00 DA

Attorney's Docket No.: 102792-543

Applicant	:	James Anderson et al.
Application No.	:	29/256,440
Filed	:	21 March 2006
For	:	Air freshener device
Group Art Unit	:	TBA
Examiner	:	TBA

Approved 8/25/06
Jacqueline M. Stone
Jacqueline M. Stone, Director
Technology Center 1700/2900

Commissioner for Patents,
P.O. Box 1450,
Alexandria, VA 22313-1450

REQUEST FOR EXPEDITED EXAMINATION OF DESIGN APPLICATION UNDER 37 CFR 1.155

Sir:

This is a request for expedited examination of a design application under 37 CFR 1.155.

A pre-examination search was conducted. The following field of search was conducted:

All patents in class D23/ subclass 355, 366, 367, 368, 369, 385

All patents in class 222/ subclass 645, 646, 647, 648, 649

All patents in class 239/ subclass 337, 338, 585.4, 585.5

All patents in class 422/ subclass 123, 306

PAGE 2/9 * RCVD AT 6/14/2006 5:39:36 PM [Eastern Daylight Time] * SVR:USPTO-EFXRF-2/9 * DNIS:2738300 * CSID:2128080844 * DURATION (mm-ss):02-54

The following items required under 37 CFR 1.155 are enclosed:

(i) Fee of $900.00 set forth in 37 CFR 1.17(k); and

(ii) Information Disclosure Statement in compliance with 37 CFR 1.98.

Please charge the petition fee of $900.00 to Deposit Account No. 14-1263. Please charge Deposit Account no. 14-1263 for any fee deficiency, or credit said Account for any overpayment.

Respectfully Submitted,

Christa Hildebrand

Christa Hildebrand
Reg. No. 34,953
Andrew Parfomak
Reg. No. 32, 431
Attorney for Applicants
Norris, McLaughlin & Marcus P.A.
875 Third Avenue – 18th Floor
New York, N.Y. 10022
Telephone: (212)808-0700
Facsimile: (212)808-0844

Date: June 14, 2006

PAGE 3/9 * RCVD AT 6/14/2006 5:39:36 PM [Eastern Daylight Time] * SVR:USPTO-EFXRF-2/9 * DNIS:2738300 * CSID:2128080844 * DURATION (mm-ss):02-54

PTO/SB/27 (09-04)
Approved for use through 07/31/2006. OMB 0651-0031
U.S. Patent and Trademark Office; U.S DEPARTMENT OF COMMERCE
Under the Paperwork Reduction ACT of 1995, no persons are required to respond to collection of information unless it displays a valid OMB control number.

REQUEST FOR EXPEDITED EXAMINATION OF A DESIGN APPLICATION (37 CFR 1.155)

Application Number	Not Yet Assigned
Filing Date	Herewith (03/22/06)
First Named Inventor	Stacy Wyatt
Title	Wrist Brace
Atty Docket Number	WYAT3002/JEK/JJC

110006 U.S.PTO
29/250480
032206

ADDRESS TO:

MAIL STOP EXPEDITED DESIGN
COMMISSIONER FOR PATENTS
P.O. Box 1450
Alexandria, VA 22313-1450

This is a request for expedited examination of a design application under 37 CFR 1.155.

NOTE: If the Request made by this form accompanies original application papers, include form PTO/SB/18 "Design Patent Application Transmittal" or its equivalent.

A preexamination search was conducted. The field of search was:

D24/190, 602/5, 602/6, 602/20 and 602/21

Related applications: _____

If not previously filed for the above-identified application, the following items required by 37 CFR 1.155 are enclosed:

- Formal drawings (see 37 CFR 1.84).
- The fee set forth in 37 CFR 1.17(k).
- An information disclosure statement in compliance with 37 CFR 1.98.

Approved 4-11-06
Jacqueline M. Stone
Jacqueline M. Stone, Director
Technology Center 1700

Signature	March 22, 2006 — Date
JUSTIN J. CASSELL — Typed or printed name	46,205 — Registration Number, if applicable
(703)683-0500 — Telephone Number	

WARNING: Information on this form may become public. Credit card information should not be included on this form. Provide credit card information and authorization on PTO-2038.

This collection of information is required by 37 CFR 1.155. The information is required to obtain or retain a benefit by the public which is to file (and by the USPTO to process) an application. Confidentiality is governed by 35 U.S.C. 122 and 37 CFR 1.11 and 1.14. This collection is estimated to take 8 minutes to complete, including gathering, preparing, and submitting the completed application form to the USPTO. Time will vary depending upon the individual case. Any comments on the amount of time you require to complete this form and/or suggestions for reducing this burden, should be sent to the Chief Information Officer, U.S. Patent and Trademark Office, U.S. Department of Commerce, P.O. Box 1450, Alexandria, VA 22313-1450. DO NOT SEND FEES OR COMPLETED FORMS TO THIS ADDRESS. SEND TO: Commissioner for Patents, P.O. Box 1450, Alexandria, VA 22313-1450.

If you need assistance in completing the form, call 1-800-PTO-9199 and select option 2.

03/23/2006 LWONDIM1 00000048 29256480

04 FC:1802 900.00 OP

UNITED STATES PATENT AND TRADEMARK OFFICE

COMMISSIONER FOR PATENTS
UNITED STATES PATENT AND TRADEMARK OFFICE
P.O. BOX 1450
ALEXANDRIA, VA 22313-1450
www.uspto.gov

COPY MAILED

JAN 08 2007

OFFICE OF PETITIONS

MINTZ, LEVIN, COHN, FERRIS
GLOVSKY and POPEO, P.C.
Attorneys for Applicant
One Financial Center
Boston, MA 02111

In re Application of	:
Chen, et al.	: DECISION REFUSING STATUS
Application No. 29/256,524	: UNDER 37 CFR 1.47(a)
Filed: March 21, 2006	:
Atty. Dkt. No.: 18133-283	:
For: Surge Protector	:

This decision is in response to the petition under 37 CFR 1.47(a) filed November 13, 2006.

The petition under 37 CFR 1.47(a) is **DISMISSED**.

Petitioners are given TWO MONTHS from the mailing date of this decision to reply, correcting the below-noted deficiencies. Any reply should be entitled "Request for Reconsideration of Petition Under 37 CFR 1.47(a)," and should only address the deficiencies noted herein. The reply under 37 CFR 1.47(a) may include an oath or declaration executed by the non-signing inventors. Any extensions of time will be governed by 37 CFR 1.136(a).

The above-identified application was filed without an executed oath or declaration. Accordingly, a Notice to File Missing Parts of Nonprovisional Application (Notice) was mailed April 13, 2006. The Notice required a surcharge and an executed oath or declaration.

A grantable petition under 37 CFR 1.47(a) requires: (1) proof that the non-signing inventor cannot be reached or refuses to sign the oath or declaration after having been presented with the application papers (specification, claims and drawings); (2) an acceptable oath or declaration in compliance with 35 U.S.C. §§ 115 and 116; (3) the petition fee; and (4) a statement of the last known address of the non-signing inventor.

As to inventor David Lin, petitioners have failed to establish that the non-signing inventor received a complete copy of the application papers (specification, including claims, drawings, and oath or declaration) and thereafter refused to execute an oath or

declaration, or, that the non-signing inventor cannot be reached or located for presentation of the application papers.

Petitioners indicate that attempted deliveries of a package to the inventor were unsuccessful due to an incorrect address. Petitioners have failed to present evidence of sufficient effort to establish a more likely address for the non-signing inventor.

Where inability to reach or locate a non-signing inventor is alleged, petitioners are required to establish that diligent effort was made to locate the non-signing inventor and provide the non-signing inventor with a complete copy of the patent application (specification, including claims, drawings, and oath or declaration). Petitioners have not established that diligent effort has been made to locate the non-signing inventor for presentation of the application papers.

Any renewed petition must be supported by evidence that sufficiently establishes that despite diligent effort, the non-signing inventor cannot be located. A statement of facts should be submitted that fully describes the exact facts that are relied on to establish that a *diligent effort* was made to locate the non-signing inventor. The statement of facts must be signed, where at all possible, by a person having *firsthand knowledge* of the facts recited therein. Statements based on hearsay, will not normally be accepted. At the very least, a search of the internet, human resource records, telephone directories, etc. should be undertaken in regions where it is suspected the non-signing inventor may reside. Petitioner should reference and supply evidence of any such searches in a renewed petition. *See*, MPEP 409.03(d).

Further correspondence with respect to this matter should be addressed as follows:

By mail: Mail Stop Petition
Commissioner for Patents
P.O. Box 1450
Alexandria, VA 22313-1450

By facsimile: (571) 273-8300

By hand: U.S. U.S. Patent and Trademark Office
Customer Service Window
Mail Stop Petition
Randolph Building
401 Dulaney Street
Alexandria, VA 22314

Telephone inquiries related to this decision may be directed to the undersigned at (571) 272-3205.

Alesia M. Brown
Petitions Attorney
Office of Petitions

UNITED STATES PATENT AND TRADEMARK OFFICE

COMMISSIONER FOR PATENTS
UNITED STATES PATENT AND TRADEMARK OFFICE
P.O. BOX 1450
ALEXANDRIA, VA 22313-1450
www.uspto.gov

MINTZ, LEVIN, COHN, FERRIS
GLOVSKY and POPEO, P.C.
Attorneys for Applicant
One Financial Center
Boston, MA 02111

COPY MAILED

JUN 21 2007

OFFICE OF PETITIONS

In re Application of	:
Chen, et al.	: DECISION GRANTING STATUS
Application No. 29/256,524	: UNDER 37 CFR 1.47(a)
Filed: March 21, 2006	:
Atty. Dkt. No.: 18133-283	:
For: Surge Protector	:

This decision is in response to the renewed petition under 37 CFR 1.47(a) filed February 15, 2007.

The petition is **GRANTED**.

Petitioners have shown that the non-signing inventor has refused to execute the declaration for the above-identified application and/or cannot be reached or located for presentation and execution of same, and is thus unavailable.

The above-identified application and papers have been reviewed and found in compliance with 37 CFR 1.47(a). This application is hereby accorded Rule 1.47(a) status.

As provided in Rule 1.47(c), this Office will forward notice of this application's filing to the non-signing inventors at the addresses given in the petition. Notice of the filing of this application will also be published in the Official Gazette.

This application is being forwarded to the Office of Initial Patent Examination for further processing.

Telephone inquiries regarding this decision should be directed to the undersigned at (571) 272-3205.

Alesia M. Brown
Petitions Attorney
Office of Petitions

UNITED STATES PATENT AND TRADEMARK OFFICE

COMMISSIONER FOR PATENTS
UNITED STATES PATENT AND TRADEMARK OFFICE
P.O. BOX 1450
ALEXANDRIA, VA 22313-1450
www.uspto.gov

COPY MAILED

JUN 21 2007

OFFICE OF PETITIONS

Donald Chen
No. 39, Shueipu Village
Beigang Township
Yunlin County 651 Taiwan (R.O.C.)

In re Application of	:
Chen, et al.	: LETTER
Application No. 29/256,524	:
Filed: March 21, 2006	:
Atty. Dkt. No.: 18133-283	:
For: Surge Protector	:

Dear Sir:

You are named as an inventor in the above-identified United States patent application filed under the provisions of 35 U.S.C. 116 (United States Code) and 37 C.F.R. § 1.47(a), Rules of Practice in Patent Cases. Should a patent be granted on the application you will be designated therein as a joint inventor.

As a named inventor you are entitled to inspect any paper in the file wrapper of the application, order copies of all or any part thereof (at a prepaid cost as per 37 C.F.R. § 1.19) or make your position of record in the application. Alternatively, you may arrange to do any of the preceding through a registered patent attorney or agent presenting written authorization from you. If you care to join the application, counsel of record (see below) would presumably assist you. Joining in the application would entail the filing of an appropriate oath or declaration by you pursuant to 37 C.F.R. § 1.63.

Requests for information regarding your application should be directed to the File Information Unit at (703) 308-2733. Information regarding how to pay for and order a copy of the application, or a specific paper in the application, should be directed to Certification Division at (703) 308-9726 or 1-800-972-6382 (outside the Washington D.C. area).

Alesia M. Brown
Petitions Attorney
Office of Petitions

UNITED STATES PATENT AND TRADEMARK OFFICE

Commissioner for Patents
United States Patent and Trademark Office
Washington, D.C. 20231
www.uspto.gov

MARTIN D. MOYNIHAN
PRTSI, INC.
P.O. BOX 16446
ARLINGTON, VA 22215

COPY MAILED

MAY 24 2007

OFFICE OF PETITIONS

In re Application of
Eli Cohen et al.
Application No. 29/256,602
Filed: March 23, 2006
Attorney Docket No. 30605

ON PETITION

This is a decision on the petition filed April 27, 2007, to withdraw the holding of abandonment , under 37 CFR 1.181(b) and in accordance with the reasoning of the decision in Delgar Inc. v. Schuyler, 172 USPQ 513.

The petition is **GRANTED**.

This application became abandoned for failure to pay the issue fee on or before January 19, 2007 as was required by the Notice of Allowance mailed October 19, 2006. This application therefore became abandoned on January 22, 2007. Accordingly, a Notice of Abandonment was mailed March 28, 2007.

The file record discloses that the Notice of Allowance was mailed to the address of record, the same address to which the Notice of Allowability and Notice of Abandonment were mailed and received by the petitioner. However, petitioner contends that the Notice of Allowance was not received. In support, petitioner indicates that a search of the file jacket revealed that the Notice was not received and submits copies of pages from the docketing system, wherein receipt of the Notice would have been entered, had it been received to substantiate the claim. The statement and attachments corroborate non-receipt of the Notice of Allowance.

In view of the facts set forth in the petition, it is concluded that the Notice of Allowance was never received. Accordingly, the holding of abandonment is withdrawn. No petition fee is due and none will be charged.

This application is being forwarded to Technology Center 2916 for a remailing of the Notice of Allowance.

Telephone inquiries concerning this matter should be directed to the undersigned Petitions Attorney at (571) 272-3212.

Patricia Faison-Ball

Patricia Faison-Ball
Senior Petitions Attorney
Office of Petitions

PTOISB/27 (09-04)
Approved for use through 07/31/2006. OMB 0651-0031
U.S. Patent and Trademark Office; U.S DEPARTMENT OF COMMERCE
Under the Paperwork Reduction ACT of 1995, no persons are required to respond to collection of information unless it displays a valid OMB control number.

REQUEST FOR EXPEDITED EXAMINATION OF A DESIGN APPLICATION (37 CFR 1.155)

Application Number	To be assigned
Filing Date	To be assigned
First Named Inventor	Sean Michael McDowell
Title	OUTSOLE OF A SHOE
Attorney Docket Number	2465-7576.1US

113000 U.S. PTO
29/256620
032306

ADDRESS TO:

MAIL STOP EXPEDITED DESIGN
COMMISSION FOR PATENTS
P.O. BOX 1450
Alexandria, VA 22313-1450

03/27/2006 CNGUYEN2 00000001 29256620
04 FC:1802 900.00 OP

This is a request for expedited examination of a design application under 37 CER 1.155.

NOTE: If the Request made by this form accompanies original application papers, include form PTO/SB/18 "Design Patent Application Transmittal" or its equivalent.

A preexamination search was conducted. The field of search was:

US. CL. D2/896, D2/897, D2/902, D2/907, D2/908, D2/910 D2/911, D2/912, D2/916, D2/922, D2/935, D2/946, D2/947, D2/951, D2/952, D2/953, D2/954, D2/955, D2/956, D2/957, D2/958, D2/959, D2/960, D2/962, D2/967, D2/968, D2/969, D2/970, D2/971, D2/972, D2/975, D2/977, D2/978, 36/25R, 36/28, 36/29, 36/32R, 36/45, 36/50.1, 36/83, 36/88, 36/89, 36/93, 36/101, 36/102, 36/103, 36/104, 36/106, 36/108, 36/109, 36/113, 36/114, 36/115, 36/116, 36/126, 36/127, 36/128, 36/129, 36/130

Related applications: _____

If not previously filed for the above-identified application, the following items required by 37 CFR 1.155 are enclosed:

- Formal drawings (see 37 CFR 1.84).
- The fee set forth in 37 CFR 1.17(k).
- An information disclosure statement in compliance with 37 CFR 1.98.

Approved
Jacqueline M. Stone
Jacqueline M. Stone, Director
Technology Center 1700
4-6-06

Signature	23 March 2006 Date
Laurence B. Bond Typed or printed name	30,549 Registration Number, if applicable
(801) 532-1922 Telephone Number	

WARNING: Information on this form may become public. Credit card information should not be included on this form. Provide credit card information and authorization on PTO-2038.

This collection of information is required by37 CFR 1.155. The information is required to obtain or retain a benefit by the public which is to file (and by the USPTO to process) an application. Confidentiality is governed by 35 U.S.C. 122 and 37 CFR 1.11 and 1.14. This collection is estimated to take 6 minutes to complete, including gathering, preparing, and submitting the completed application form to the USPTO. Time will vary depending upon the individual case. Any comments on the amount of time you require to complete this form and/or suggestions for reducing this burden, should be sent to the Chief Information Officer, U.S. Patent and Trademark Office, U.S. Department of Commerce, P.O. Box 1450, Alexandria, VA 22313-1450. DO NOT SEND FEES OR COMPLETED FORMS TO THIS ADDRESS. SEND TO: Commissioner for Patents, P.O. Box 1450, Alexandria, VA 22343-1450.
If you need assistance in completing the form, call 1-800-PTO-9199 and select option 2.

UNITED STATES PATENT AND TRADEMARK OFFICE

Commissioner for Patents
United States Patent and Trademark Office
P.O. Box 1450
Alexandria, VA 22313-1450
www.uspto.gov

COPY MAILED

JUN 21 2007

OFFICE OF PETITIONS

MERCHANT & GOULD PC
PO BOX 2903
MINNEAPOLIS MN 55402-0903

In re Application of	:	
Olson, et al.	:	
Application No. 29/256,631	:	ON PETITION
Filed: March 22, 2006	:	
Attorney Docket No. 10532.66US01	:	

This is a decision on the petition to withdraw the holding of abandonment under 37 CFR 1.181, filed June 4, 2007.

The petition is **GRANTED**.

This application was held abandoned for failure to timely file a response to the Notice of Allowance mailed October 19, 2006. This Office action set a statutory period for reply of three months for issue fee transmittal. No issue fee having been received, the application became abandoned on January 20, 2007. A Notice of Abandonment was mailed on February 23, 2007.

Petitioner contends that he did timely file a proper reply. In support, petitioner has included a copy of a USPTO date stamped postcard receipt dated January 19, 2007, and itemizing a Continued Prosecution Application (CPA).

A postcard receipt which itemizes and properly identifies the items which are being filed serves as *prima facie* evidence of receipt in the Office of all items listed thereon on the date stamped thereon by the Office. See MPEP 503.

In view thereof, **THE HOLDING OF ABANDONMENT IS WITHDRAWN.**

The $100 filing fee for the CPA has been charged to Deposit Account No. 13-2725, as authorized.

The matter is being forwarded to Group Art Unit 2914 for consideration of the CPA filed January 19, 2007 (copy supplied with the instant petition).

Telephone inquiries regarding this decision should be directed to the undersigned at (571)272-3207.

Cliff Congo
Petitions Attorney
Office of Petitions

UNITED STATES PATENT AND TRADEMARK OFFICE

Commissioner for Patents
United States Patent and Trademark Office
P.O. Box 1450
Alexandria, VA 22313-1450
www.uspto.gov

HOGAN & HARTSON LLP
IP GROUP, COLUMBIA SQUARE
555 THIRTEENTH STREET, N.W.
WASHINGTON DC 20004

COPY MAILED
DEC 3 1 2008

In re Application of :
Sawyer :
Application No. 29/256,720 : ON PETITION
Filed: March 24, 2006 :
Attorney Docket No. 66187-0013 :
For: INJECTION DEVICE

This is a decision on the petition under 37 CFR 1.181, filed December 9, 2008, requesting that the Office withdraw the holding of abandonment of the above-identified application.

The petition under 37 CFR 1.181 is **GRANTED**.

This application was held abandoned for failure to respond in a timely manner to the Quayle action, mailed March 20, 2007, which set forth an extendable two (2) month period for reply. The Office contended that this application became abandoned on May 21, 2007 for failure to reply. A Notice of Abandonment was mailed on October 18, 2007.

Petitioner asserts that a reply was timely received in the Office on May 18, 2007. In support of this assertion, petitioner has provided a copy of applicant's itemized postcard receipt showing an Office of Initial Patent Examination date stamp, citing May 18, 2007 as the date of receipt, affixed thereto. The postcard lists that the filing included an amendment and response with 2 replacement drawing sheets and 4 annotated drawing sheets.

The return postcard constitutes *prima facie* evidence that the items listed thereon were received in the Office on May 18, 2007. MPEP 503. Accordingly, the petition to withdraw the holding of abandonment is granted.

The petition under 37 CFR 1.181 is **granted** and the holding of abandonment is withdrawn. No petition fee has been or will be charged in connection with this matter.

Accordingly, the application file will be returned to Technology Center A.U. 2914 for consideration of the amendment filed on May 18, 2007 and resubmitted on October 26, 2007 and December 9, 2008.

Telephone inquiries pertaining to this matter may be directed to the undersigned at (571) 272-3230.

Shirene Willis Brantley
Senior Petitions Attorney
Office of Petitions
Office of the Deputy Commissioner
for Patent Examination Policy

UNITED STATES PATENT AND TRADEMARK OFFICE

Commissioner for Patents
United States Patent and Trademark Office
P.O. Box 1450
Alexandria, VA 22313-1450
www.uspto.gov

FAEGRE & BENSON, LLP
PATENT DOCKETING
90 SOUTH SEVENTH STREET
2200 WELLS FARGO CENTER
MINNEAPOLIS MN 55402

COPY MAILED
DEC 11 2007
OFFICE OF PETITIONS

In re Application of	:	
Machael et al.	:	
Application No. 29/256,777	:	DECISION ON PETITION
Filed: March 24, 2006	:	
Attorney Docket No. 77012-333464	:	

This is a decision on the petition under 37 CFR 1.182, filed, June 19, 2007, to change the order of the named inventors in the above-identified application.

The petition is **DISMISSED**.

Any request for reconsideration should be filed within **TWO MONTHS** of the mailing date of this decision in order to be considered timely. 37 CFR 1.181(f). This time period may not be extended pursuant to 37 CFR 1.136.

The petition to change the order of names must be signed by either the attorney or agent of record or all the applicants. See MPEP 605.04(f). A review of the record shows that power of attorney has not been authorized to Lynn Cameron.

It should further be noted an ADS filed with the application is not required to be signed unless the ADS includes a nonpublication request. 37 CFR 1.33(b) requires that amendments and other papers, except for written assertions pursuant to 37 CFR 1.27(c)(2)(ii), filed in the application must be signed by an appropriate party. Therefore, an ADS or a supplemental ADS filed after the filing of an application must be signed in accordance with 37 CFR 1.33(b).

In view of the above, the petition under § 1.182 to amend the order of inventors cannot be granted.

Further correspondence with respect to this matter should be addressed as follows:

By mail: Mail Stop PETITIONS

Commissioner for Patents
Post Office Box 1450
Alexandria, VA 22313-1450

By hand: Customer Service Window
Mail Stop Petitions
Randolph Building
401 Dulany Street
Alexandria, VA 22314

By fax: (571) 273-8300
ATTN: Office of Petitions

Any questions concerning this matter may be directed to the undersigned at (571) 272-3215.

Charlema Grant
Petitions Attorney
Office of Petitions

UNITED STATES PATENT AND TRADEMARK OFFICE

Commissioner for Patents
United States Patent and Trademark Office
P.O. Box 1450
Alexandria, VA 22313-1450
www.uspto.gov

FAEGRE & BENSON, LLP
PATENT DOCKETING
90 SOUTH SEVENTH STREET
2200 WELLS FARGO CENTER
MINNEAPOLIS MN 55402

COPY MAILED

MAR 28 2008

OFFICE OF PETITIONS

In re Application of	:	
Koepke et al.	:	
Application No. 29/256,777	:	DECISION ON PETITION
Filed: March 24, 2006	:	
Attorney Docket No. 77012-333464	:	

This is a decision on the renewed petition under 37 CFR 1.182, filed, January 14, 2008, to change the order of the named inventors in the above-identified application.

The petition is **GRANTED**.

Office records have been corrected to reflect the change in the order of the named inventors. A corrected Filing Receipt, which sets forth the desired order of the named inventors, accompanies this decision on petition.

This application is being referred to Publishing Division for further processing in accordance with this decision on petition.

Any questions concerning this matter may be directed to the undersigned at (571) 272-3215.

Charlema Grant
Petitions Attorney
Office of Petitions

UNITED STATES PATENT AND TRADEMARK OFFICE

UNITED STATES DEPARTMENT OF COMMERCE
United States Patent and Trademark Office
Address: COMMISSIONER FOR PATENTS
P.O. Box 1450
Alexandria, Virginia 22313-1450
www.uspto.gov

APPLICATION NUMBER	FILING or 371(c) DATE	GRP ART UNIT	FIL FEE REC'D	ATTY.DOCKET.NO	TOT CLAIMS	IND CLAIMS
29/256,777	03/24/2006	2913	790	77012-333464	1	1

CONFIRMATION NO. 8563

CORRECTED FILING RECEIPT

OC000000029101627

58506
FAEGRE & BENSON, LLP
PATENT DOCKETING
90 SOUTH SEVENTH STREET
2200 WELLS FARGO CENTER
MINNEAPOLIS, MN 55402

Date Mailed: 03/27/2008

Receipt is acknowledged of this non-provisional patent application. The application will be taken up for examination in due course. Applicant will be notified as to the results of the examination. Any correspondence concerning the application must include the following identification information: the U.S. APPLICATION NUMBER, FILING DATE, NAME OF APPLICANT, and TITLE OF INVENTION. Fees transmitted by check or draft are subject to collection. Please verify the accuracy of the data presented on this receipt. **If an error is noted on this Filing Receipt, please write to the Office of Initial Patent Examination's Filing Receipt Corrections. Please provide a copy of this Filing Receipt with the changes noted thereon. If you received a "Notice to File Missing Parts" for this application, please submit any corrections to this Filing Receipt with your reply to the Notice. When the USPTO processes the reply to the Notice, the USPTO will generate another Filing Receipt incorporating the requested corrections**

Applicant(s)

Marcus C. Koepke, Indianapolis, IN;
John Koch, Muscatine, IA;
Jay R. Machael, Muscatine, IA;
Aaron Michael Ickes, Davenport, IA;

Power of Attorney: The patent practitioners associated with Customer Number 58506

Domestic Priority data as claimed by applicant

Foreign Applications

If Required, Foreign Filing License Granted: 04/17/2006

The country code and number of your priority application, to be used for filing abroad under the Paris Convention, is **US 29/256,777**

Projected Publication Date: None, application is not eligible for pre-grant publication

Non-Publication Request: No

Early Publication Request: No

Title

CHAIR ARM

Preliminary Class

D06

PROTECTING YOUR INVENTION OUTSIDE THE UNITED STATES

Since the rights granted by a U.S. patent extend only throughout the territory of the United States and have no effect in a foreign country, an inventor who wishes patent protection in another country must apply for a patent in a specific country or in regional patent offices. Applicants may wish to consider the filing of an international application under the Patent Cooperation Treaty (PCT). An international (PCT) application generally has the same effect as a regular national patent application in each PCT-member country. The PCT process **simplifies** the filing of patent applications on the same invention in member countries, but **does not result** in a grant of "an international patent" and does not eliminate the need of applicants to file additional documents and fees in countries where patent protection is desired.

Almost every country has its own patent law, and a person desiring a patent in a particular country must make an application for patent in that country in accordance with its particular laws. Since the laws of many countries differ in various respects from the patent law of the United States, applicants are advised to seek guidance from specific foreign countries to ensure that patent rights are not lost prematurely.

Applicants also are advised that in the case of inventions made in the United States, the Director of the USPTO must issue a license before applicants can apply for a patent in a foreign country. The filing of a U.S. patent application serves as a request for a foreign filing license. The application's filing receipt contains further information and guidance as to the status of applicant's license for foreign filing.

Applicants may wish to consult the USPTO booklet, "General Information Concerning Patents" (specifically, the section entitled "Treaties and Foreign Patents") for more information on timeframes and deadlines for filing foreign patent applications. The guide is available either by contacting the USPTO Contact Center at 800-786-9199, or it can be viewed on the USPTO website at http://www.uspto.gov/web/offices/pac/doc/general/index.html.

For information on preventing theft of your intellectual property (patents, trademarks and copyrights), you may wish to consult the U.S. Government website, http://www.stopfakes.gov. Part of a Department of Commerce initiative, this website includes self-help "toolkits" giving innovators guidance on how to protect intellectual property in specific countries such as China, Korea and Mexico. For questions regarding patent enforcement issues, applicants may call the U.S. Government hotline at 1-866-999-HALT (1-866-999-4158).

LICENSE FOR FOREIGN FILING UNDER

Title 35, United States Code, Section 184

Title 37, Code of Federal Regulations, 5.11 & 5.15

GRANTED

The applicant has been granted a license under 35 U.S.C. 184, if the phrase "IF REQUIRED, FOREIGN FILING LICENSE GRANTED" followed by a date appears on this form. Such licenses are issued in all applications where the conditions for issuance of a license have been met, regardless of whether or not a license may be required as

set forth in 37 CFR 5.15. The scope and limitations of this license are set forth in 37 CFR 5.15(a) unless an earlier license has been issued under 37 CFR 5.15(b). The license is subject to revocation upon written notification. The date indicated is the effective date of the license, unless an earlier license of similar scope has been granted under 37 CFR 5.13 or 5.14.

This license is to be retained by the licensee and may be used at any time on or after the effective date thereof unless it is revoked. This license is automatically transferred to any related applications(s) filed under 37 CFR 1.53(d). This license is not retroactive.

The grant of a license does not in any way lessen the responsibility of a licensee for the security of the subject matter as imposed by any Government contract or the provisions of existing laws relating to espionage and the national security or the export of technical data. Licensees should apprise themselves of current regulations especially with respect to certain countries, of other agencies, particularly the Office of Defense Trade Controls, Department of State (with respect to Arms, Munitions and Implements of War (22 CFR 121-128)); the Bureau of Industry and Security, Department of Commerce (15 CFR parts 730-774); the Office of Foreign AssetsControl, Department of Treasury (31 CFR Parts 500+) and the Department of Energy.

NOT GRANTED

No license under 35 U.S.C. 184 has been granted at this time, if the phrase "IF REQUIRED, FOREIGN FILING LICENSE GRANTED" DOES NOT appear on this form. Applicant may still petition for a license under 37 CFR 5.12, if a license is desired before the expiration of 6 months from the filing date of the application. If 6 months has lapsed from the filing date of this application and the licensee has not received any indication of a secrecy order under 35 U.S.C. 181, the licensee may foreign file the application pursuant to 37 CFR 5.15(b).

UNITED STATES PATENT AND TRADEMARK OFFICE

Commissioner for Patents
United States Patent and Trademark Office
P.O. Box 1450
Alexandria, VA 22313-1450
www.uspto.gov

TERENCE P. O'BRIEN
AMER SPORTS NORTH AMERICA
8750 W. BRYN MAWR AVENUE
CHICAGO IL 60631

COPY MAILED

SEP 0 8 2008

OFFICE OF PETITIONS

In re Application of	:	
Brady A. Olason	:	
Application No. 29/256,795	:	ON PETITION
Filed: March 24, 2006	:	
Attorney Docket No. P12577	:	

This is a decision on the petition under 37 CFR 1.137(b), filed November 30, 2007, to revive the above-identified application.

The petition is **DISMISSED**.

Any request for reconsideration of this decision must be submitted within TWO (2) MONTHS from the mail date of this decision. Extensions of time under 37 CFR 1.136(a) are permitted. The reconsideration request should include a cover letter entitled "Renewed Petition under 37 CFR 1.137(b)." This is **not** a final agency action within the meaning of 5 U.S.C. § 704.

The application became abandoned for failure s to timely pay the issue fee on or before November 19, 2007, as required by the Notice of Allowance and Fee(s) Due, mailed August 17, 2007, which set a statutory period for reply of three (3) months. Accordingly, the application became abandoned on November 20, 2007. The Notice of Abandonment was mailed February 21, 2008.

A grantable petition under 37 CFR 1.137(b) must be accompanied by: (1) the required reply, unless previously filed; (2) the petition fee as set forth in 37 CFR 1.17(m); (3) a statement that the entire delay in filing the required reply from the due date for the reply until the filing of a grantable petition pursuant to 37 CFR 1.137(b) was unintentional; and (4) any terminal disclaimer (and fee as set forth in 37 CFR 1.20(d)) required by 37 CFR 1.137(d). Where there is a question as to whether either the abandonment or the delay in filing a petition under 37 CFR 1.137 was unintentional, the Commissioner may require additional information. See MPEP 711.03(c)(III)(C) and (D). The instant petition lacks item(s) (4).

All design application petitions must be accompanied with a terminal disclaimer (and fee as set forth in 37 CFR 1.20(d)) as required by 37 CFR 1.137(d). A copy of the terminal disclaimer form PTO/SB/63 is enclosed for your convenience.

Further correspondence with respect to this matter should be addressed as follows:

By Mail: Mail Stop PETITION
Commissioner for Patents
P. O. Box 1450
Alexandria, VA 22313-1450

By hand: U. S. Patent and Trademark Office
Customer Service Window, Mail Stop Petitions
Randolph Building
401 Dulany Street
Alexandria, VA 22314

The centralized facsimile number is **(571) 273-8300.**

Telephone inquiries concerning this decision should be directed to Terri Williams at (571) 272-2991.

Chris Bottorff
Petitions Examiner
Office of Petitions

Enclosed: PTO/SB/63 (Terminal Disclaimer)

PTO/SB/63 (08-08)
Approved for use through 09/30/2008. OMB 0651-0031
U.S. Patent and Trademark Office; U.S. DEPARTMENT OF COMMERCE
Under the Paperwork Reduction Act of 1995, no persons are required to a collection of information unless it displays a valid OMB control number.

TERMINAL DISCLAIMER TO ACCOMPANY PETITION

Docket Number (Optional)

In re Application of:

Name:

Application Number:

Filed:

For:

The owner*, _____ of _____ percent interest in the above-identified application hereby disclaims a terminal part of the term of any patent granted the above-identified application equivalent to: (1) if the above-identified application is a design application, the period of abandonment of the above-identified application, and (2) if the above-identified application is a utility or plant application, the lesser of: (a) the period of abandonment of the application; or (b) the period extending beyond twenty years from the date on which the above-identified application was filed in the United States or, if the application contains a specific reference to an earlier filed application(s) under 35 U.S.C. 120, 121, or 365(c), from the date on which the earliest such application was filed. This disclaimer also applies to any patent granted on a utility or plant application filed before June 8, 1995, or a design application, that contains a specific reference under 35 U.S.C. 120, 121, or 365(c) to the above-identified application. This disclaimer is binding upon the grantee, and its successors or assigns.

Check either box 1 or 2 below, if appropriate.

1. ☐ For submissions on behalf of an organization (e.g., corporation, partnership, university, government agency, etc.), the undersigned is empowered to act on behalf of the organization.
2. ☐ The undersigned is an attorney or agent of record. Registration Number_____.

Signature	Date
Typed or Printed Name	Telephone Number

☐ Terminal disclaimer fee under 37 CFR 1.20(d) included.

WARNING: Information on this form may become public. Credit card information should not be included on this form. Provide credit card information and authorization on PTO-2038.

* Statement under 37 CFR 3.73(b) is required if terminal disclaimer is signed by the assignee (owner). Form PTO/SB/96 may be used for making this certification. See MPEP § 324.

This collection of information is required by 37 CFR 1.137. The information is required to obtain or retain a benefit by the public which is to file (and by the USPTO to process) an application. Confidentiality is governed by 35 U.S.C. 122 and 37 CFR 1.11 and 1.14. This collection is estimated to take 12 minutes to complete, including gathering, preparing, and submitting the completed application form to the USPTO. Time will vary depending upon the individual case. Any comments on the amount of time you require to complete this form and/or suggestions for reducing this burden, should be sent to the Chief Information Officer, U.S. Patent and Trademark Office, U.S. Department of Commerce, P.O. Box 1450, Alexandria, VA 22313-1450. DO NOT SEND FEES OR COMPLETED FORMS TO THIS ADDRESS. SEND TO: **Commissioner for Patents, P.O. Box 1450, Alexandria, VA 22313-1450.**

If you need assistance in completing the form, call 1-800-PTO-9199 and select option 2.

Privacy Act Statement

The **Privacy Act of 1974 (P.L. 93-579)** requires that you be given certain information in connection with your submission of the attached form related to a patent application or patent. Accordingly, pursuant to the requirements of the Act, please be advised that: (1) the general authority for the collection of this information is 35 U.S.C. 2(b)(2); (2) furnishing of the information solicited is voluntary; and (3) the principal purpose for which the information is used by the U.S. Patent and Trademark Office is to process and/or examine your submission related to a patent application or patent. If you do not furnish the requested information, the U.S. Patent and Trademark Office may not be able to process and/or examine your submission, which may result in termination of proceedings or abandonment of the application or expiration of the patent.

The information provided by you in this form will be subject to the following routine uses:

1. The information on this form will be treated confidentially to the extent allowed under the Freedom of Information Act (5 U.S.C. 552) and the Privacy Act (5 U.S.C 552a). Records from this system of records may be disclosed to the Department of Justice to determine whether disclosure of these records is required by the Freedom of Information Act.
2. A record from this system of records may be disclosed, as a routine use, in the course of presenting evidence to a court, magistrate, or administrative tribunal, including disclosures to opposing counsel in the course of settlement negotiations.
3. A record in this system of records may be disclosed, as a routine use, to a Member of Congress submitting a request involving an individual, to whom the record pertains, when the individual has requested assistance from the Member with respect to the subject matter of the record.
4. A record in this system of records may be disclosed, as a routine use, to a contractor of the Agency having need for the information in order to perform a contract. Recipients of information shall be required to comply with the requirements of the Privacy Act of 1974, as amended, pursuant to 5 U.S.C. 552a(m).
5. A record related to an International Application filed under the Patent Cooperation Treaty in this system of records may be disclosed, as a routine use, to the International Bureau of the World Intellectual Property Organization, pursuant to the Patent Cooperation Treaty.
6. A record in this system of records may be disclosed, as a routine use, to another federal agency for purposes of National Security review (35 U.S.C. 181) and for review pursuant to the Atomic Energy Act (42 U.S.C. 218(c)).
7. A record from this system of records may be disclosed, as a routine use, to the Administrator, General Services, or his/her designee, during an inspection of records conducted by GSA as part of that agency's responsibility to recommend improvements in records management practices and programs, under authority of 44 U.S.C. 2904 and 2906. Such disclosure shall be made in accordance with the GSA regulations governing inspection of records for this purpose, and any other relevant (*i.e.*, GSA or Commerce) directive. Such disclosure shall not be used to make determinations about individuals.
8. A record from this system of records may be disclosed, as a routine use, to the public after either publication of the application pursuant to 35 U.S.C. 122(b) or issuance of a patent pursuant to 35 U.S.C. 151. Further, a record may be disclosed, subject to the limitations of 37 CFR 1.14, as a routine use, to the public if the record was filed in an application which became abandoned or in which the proceedings were terminated and which application is referenced by either a published application, an application open to public inspection or an issued patent.
9. A record from this system of records may be disclosed, as a routine use, to a Federal, State, or local law enforcement agency, if the USPTO becomes aware of a violation or potential violation of law or regulation.

UNITED STATES PATENT AND TRADEMARK OFFICE

Commissioner for Patents
United States Patent and Trademark Office
P.O. Box 1450
Alexandria, VA 22313-1450
www.uspto.gov

TERENCE P. O'BRIEN
AMER SPORTS NORTH AMERICA
8750 W. BRYN MAWR AVENUE
CHICAGO, IL 60631

MAILED

MAR 27 2009

OFFICE OF PETITIONS

In re Application of	:	
Brady A. Olason	:	
Application No. 29/256,795	:	DECISION ON PETITION
Filed: March 24, 2006	:	
Attorney Docket No. P12577	:	

This is a decision on the renewed petition under 37 CFR 1.137(b), filed December 16, 2008, to revive the above-identified design application.

The petition is **GRANTED**.

The application became abandoned for failure to timely pay the issue fee on or before November 19, 2007, as required by the Notice of Allowance and Fee(s) Due, mailed August 17, 2007, which set a statutory period for reply of three (3) months. Accordingly, the application became abandoned on November 20, 2007. A Notice of Abandonment was mailed on February 21, 2008.

The petition satisfies the requirements of 37 CFR 1.137(b) in that petitioner has supplied (1) the reply in the form of the $820 issue fee, (2) the petition fee of $1,540, (3) a proper statement of unintentional delay, and (4) a terminal disclaimer and fee as required by 37 CFR 1.137(d). Accordingly, the failure to timely pay the issue fee as required by the Notice of Allowability is accepted as being unintentionally delayed.

The terminal disclaimer is accepted and has been made of record. Any continuing application filed from this application must contain a copy of the terminal disclaimer. The copy of the terminal disclaimer must be filed with a cover letter requesting the terminal disclaimer be recorded on the continuing application. A copy of this decision should be attached to the cover letter.

Telephone inquiries concerning this decision should be directed to Terri Williams at (571) 272-2991.

This application is being referred to the Office of Data Management for further processing in accordance with this decision on petition.

Chris Bottorff
Petitions Examiner
Office of Petitions

UNITED STATES PATENT AND TRADEMARK OFFICE

COMMISSIONER FOR PATENTS
UNITED STATES PATENT AND TRADEMARK OFFICE
P.O. BOX 1450
ALEXANDRIA, VA 22313-1450
www.uspto.gov

FAEGRE & BENSON, LLP
PATENT DOCKETING
90 SOUTH SEVENTH STREET
2200 WELLS FARGO CENTER
MINNEAPOLIS, MN 55402

COPY MAILED

JUL 3 1 2007

OFFICE OF PETITIONS

In re Application of	:	
Jay R. Machael, et al.	:	
Application No. 29/256,821	:	ON PETITION
Filed: March 24, 2006	:	
Attorney Docket No. 77012-333469	:	

This is a decision on the petition under 37 CFR 1.182, filed June 19, 2007, to change the order of the names of the inventors.

The petition is **GRANTED**.

The order of the names of the inventors will be changed as follows:

1. Marcus C. Koepke
2. John Koch
3. Jay R. Machael
4. Aaron Michael Ickes

A Corrected Filing Receipt with the desired change in the order of the names of the inventors is enclosed.

The application is being referred to the Office of Publications.

Telephone inquires related to this decision should be directed to the undersigned at (571) 272-3204.
Telephone inquiries related to processing at Office of Publications should be directed to (571) 272-4200.

Sherry D. Brinkley
Petitions Examiner
Office of Petitions

Enclosure

UNITED STATES PATENT AND TRADEMARK OFFICE

UNITED STATES DEPARTMENT OF COMMERCE
United States Patent and Trademark Office
Address: COMMISSIONER FOR PATENTS
P.O. Box 1450
Alexandria, Virginia 22313-1450
www.uspto.gov

APPL NO.	FILING OR 371(c) DATE	ART UNIT	FIL FEE REC'D	ATTY.DOCKET NO	TOT CLMS	IND CLMS
29/256,821	03/24/2006	2913	560	77012-333469	1	1

CONFIRMATION NO. 1966

CORRECTED FILING RECEIPT

OC000000025098906

58506
FAEGRE & BENSON, LLP
PATENT DOCKETING
90 SOUTH SEVENTH STREET
2200 WELLS FARGO CENTER
MINNEAPOLIS, MN 55402

Date Mailed: 07/30/2007

Receipt is acknowledged of this nonprovisional patent application. The application will be taken up for examination in due course. Applicant will be notified as to the results of the examination. Any correspondence concerning the application must include the following identification information: the U.S. APPLICATION NUMBER, FILING DATE, NAME OF APPLICANT, and TITLE OF INVENTION. Fees transmitted by check or draft are subject to collection. Please verify the accuracy of the data presented on this receipt. **If an error is noted on this Filing Receipt, please write to the Office of Initial Patent Examination's Filing Receipt Corrections. Please provide a copy of this Filing Receipt with the changes noted thereon. If you received a "Notice to File Missing Parts" for this application, please submit any corrections to this Filing Receipt with your reply to the Notice. When the USPTO processes the reply to the Notice, the USPTO will generate another Filing Receipt incorporating the requested corrections (if appropriate).**

Applicant(s)

Marcus C. Koepke, Indianapolis, IN;
John Koch, Muscatine, IA;
Jay R. Machael, Muscatine, IA;
Aaron Michael Ickes, Davenport, IA;

Power of Attorney: None

Domestic Priority data as claimed by applicant

Foreign Applications

If Required, Foreign Filing License Granted: 04/18/2006

The country code and number of your priority application, to be used for filing abroad under the Paris Convention, is US29/256,821

Projected Publication Date: None, application is not eligible for pre-grant publication

Non-Publication Request: No

Early Publication Request: No

Title

CHAIR

Preliminary Class

D06

PROTECTING YOUR INVENTION OUTSIDE THE UNITED STATES

Since the rights granted by a U.S. patent extend only throughout the territory of the United States and have no effect in a foreign country, an inventor who wishes patent protection in another country must apply for a patent in a specific country or in regional patent offices. Applicants may wish to consider the filing of an international application under the Patent Cooperation Treaty (PCT). An international (PCT) application generally has the same effect as a regular national patent application in each PCT-member country. The PCT process **simplifies** the filing of patent applications on the same invention in member countries, but **does not result** in a grant of "an international patent" and does not eliminate the need of applicants to file additional documents and fees in countries where patent protection is desired.

Almost every country has its own patent law, and a person desiring a patent in a particular country must make an application for patent in that country in accordance with its particular laws. Since the laws of many countries differ in various respects from the patent law of the United States, applicants are advised to seek guidance from specific foreign countries to ensure that patent rights are not lost prematurely.

Applicants also are advised that in the case of inventions made in the United States, the Director of the USPTO must issue a license before applicants can apply for a patent in a foreign country. The filing of a U.S. patent application serves as a request for a foreign filing license. The application's filing receipt contains further information and guidance as to the status of applicant's license for foreign filing.

Applicants may wish to consult the USPTO booklet, "General Information Concerning Patents" (specifically, the section entitled "Treaties and Foreign Patents") for more information on timeframes and deadlines for filing foreign patent applications. The guide is available either by contacting the USPTO Contact Center at 800-786-9199, or it can be viewed on the USPTO website at http://www.uspto.gov/web/offices/pac/doc/general/index.html.

For information on preventing theft of your intellectual property (patents, trademarks and copyrights), you may wish to consult the U.S. Government website, http://www.stopfakes.gov. Part of a Department of Commerce initiative, this website includes self-help "toolkits" giving innovators guidance on how to protect intellectual property in specific countries such as China, Korea and Mexico. For questions regarding patent enforcement issues, applicants may call the U.S. Government hotline at 1-866-999-HALT (1-866-999-4158).

LICENSE FOR FOREIGN FILING UNDER
Title 35, United States Code, Section 184
Title 37, Code of Federal Regulations, 5.11 & 5.15

GRANTED

The applicant has been granted a license under 35 U.S.C. 184, if the phrase "IF REQUIRED, FOREIGN FILING LICENSE GRANTED" followed by a date appears on this form. Such licenses are issued in all applications where the conditions for issuance of a license have been met, regardless of whether or not a license may be required as set forth in 37 CFR 5.15. The scope and limitations of this license are set forth in 37 CFR 5.15(a) unless an earlier license has been issued under 37 CFR 5.15(b). The license is subject to revocation upon written notification. The date indicated is the effective date of the license, unless an earlier license of similar scope has been granted

under 37 CFR 5.13 or 5.14.

This license is to be retained by the licensee and may be used at any time on or after the effective date thereof unless it is revoked. This license is automatically transferred to any related applications(s) filed under 37 CFR 1.53(d). This license is not retroactive.

The grant of a license does not in any way lessen the responsibility of a licensee for the security of the subject matter as imposed by any Government contract or the provisions of existing laws relating to espionage and the national security or the export of technical data. Licensees should apprise themselves of current regulations especially with respect to certain countries, of other agencies, particularly the Office of Defense Trade Controls, Department of State (with respect to Arms, Munitions and Implements of War (22 CFR 121-128)); the Bureau of Industry and Security, Department of Commerce (15 CFR parts 730-774); the Office of Foreign Assets Control, Department of Treasury (31 CFR Parts 500+) and the Department of Energy.

NOT GRANTED

No license under 35 U.S.C. 184 has been granted at this time, if the phrase "IF REQUIRED, FOREIGN FILING LICENSE GRANTED" DOES NOT appear on this form. Applicant may still petition for a license under 37 CFR 5.12, if a license is desired before the expiration of 6 months from the filing date of the application. If 6 months has lapsed from the filing date of this application and the licensee has not received any indication of a secrecy order under 35 U.S.C. 181, the licensee may foreign file the application pursuant to 37 CFR 5.15(b).

UNITED STATES PATENT AND TRADEMARK OFFICE

COMMISSIONER FOR PATENTS
UNITED STATES PATENT AND TRADEMARK OFFICE
P.O. BOX 1450
ALEXANDRIA, VA 22313-1450
www.uspto.gov

FAEGRE & BENSON, LLP
PATENT DOCKETING
90 SOUTH SEVENTH STREET
2200 WELLS FARGO CENTER
MINNEAPOLIS, MN 55402

COPY MAILED

JUL 3 1 2007

OFFICE OF PETITIONS

In re Application of :
Jay R. Machael, et al. :
Application No. 29/256,823 : ON PETITION
Filed: March 24, 2006 :
Attorney Docket No. 77012-333468 :

This is a decision on the petition under 37 CFR 1.182, filed June 19, 2007, to change the order of the names of the inventors.

The petition is **GRANTED**.

The order of the names of the inventors will be changed as follows:

1. Marcus C. Koepke
2. John Koch
3. Jay R. Machael
4. Aaron Michael Ickes

A Corrected Filing Receipt with the desired change in the order of the names of the inventors is enclosed.

The application is being referred to the Office of Publications.

Telephone inquires related to this decision should be directed to the undersigned at (571) 272-3204.
Telephone inquiries related to processing at Office of Publications should be directed to (571) 272-4200.

Sherry D. Brinkley
Petitions Examiner
Office of Petitions

Enclosure

UNITED STATES PATENT AND TRADEMARK OFFICE

UNITED STATES DEPARTMENT OF COMMERCE
United States Patent and Trademark Office
Address: COMMISSIONER FOR PATENTS
P.O. Box 1450
Alexandria, Virginia 22313-1450
www.uspto.gov

APPL NO.	FILING OR 371(c) DATE	ART UNIT	FIL FEE REC'D	ATTY.DOCKET NO	TOT CLMS	IND CLMS
29/256,823	03/24/2006	2913	560	77012-333468	1	1

CONFIRMATION NO. 1978

CORRECTED FILING RECEIPT

OC000000025098813

58506
FAEGRE & BENSON, LLP
PATENT DOCKETING
90 SOUTH SEVENTH STREET
2200 WELLS FARGO CENTER
MINNEAPOLIS, MN 55402

Date Mailed: 07/30/2007

Receipt is acknowledged of this nonprovisional patent application. The application will be taken up for examination in due course. Applicant will be notified as to the results of the examination. Any correspondence concerning the application must include the following identification information: the U.S. APPLICATION NUMBER, FILING DATE, NAME OF APPLICANT, and TITLE OF INVENTION. Fees transmitted by check or draft are subject to collection. Please verify the accuracy of the data presented on this receipt. **If an error is noted on this Filing Receipt, please write to the Office of Initial Patent Examination's Filing Receipt Corrections. Please provide a copy of this Filing Receipt with the changes noted thereon. If you received a "Notice to File Missing Parts" for this application, please submit any corrections to this Filing Receipt with your reply to the Notice. When the USPTO processes the reply to the Notice, the USPTO will generate another Filing Receipt incorporating the requested corrections (if appropriate).**

Applicant(s)

Marcus C. Koepke, Indianapolis, IN;
John Koch, Muscatine, IA;
Jay R. Machael, Muscatine, IA;
Aaron Michael Ickes, Davenport, IA;

Power of Attorney: None

Domestic Priority data as claimed by applicant

Foreign Applications

If Required, Foreign Filing License Granted: 05/26/2006

The country code and number of your priority application, to be used for filing abroad under the Paris Convention, is US29/256,823

Projected Publication Date: None, application is not eligible for pre-grant publication

Non-Publication Request: No

Early Publication Request: No

Title

CHAIR

Preliminary Class

D06

PROTECTING YOUR INVENTION OUTSIDE THE UNITED STATES

Since the rights granted by a U.S. patent extend only throughout the territory of the United States and have no effect in a foreign country, an inventor who wishes patent protection in another country must apply for a patent in a specific country or in regional patent offices. Applicants may wish to consider the filing of an international application under the Patent Cooperation Treaty (PCT). An international (PCT) application generally has the same effect as a regular national patent application in each PCT-member country. The PCT process **simplifies** the filing of patent applications on the same invention in member countries, but **does not result** in a grant of "an international patent" and does not eliminate the need of applicants to file additional documents and fees in countries where patent protection is desired.

Almost every country has its own patent law, and a person desiring a patent in a particular country must make an application for patent in that country in accordance with its particular laws. Since the laws of many countries differ in various respects from the patent law of the United States, applicants are advised to seek guidance from specific foreign countries to ensure that patent rights are not lost prematurely.

Applicants also are advised that in the case of inventions made in the United States, the Director of the USPTO must issue a license before applicants can apply for a patent in a foreign country. The filing of a U.S. patent application serves as a request for a foreign filing license. The application's filing receipt contains further information and guidance as to the status of applicant's license for foreign filing.

Applicants may wish to consult the USPTO booklet, "General Information Concerning Patents" (specifically, the section entitled "Treaties and Foreign Patents") for more information on timeframes and deadlines for filing foreign patent applications. The guide is available either by contacting the USPTO Contact Center at 800-786-9199, or it can be viewed on the USPTO website at http://www.uspto.gov/web/offices/pac/doc/general/index.html.

For information on preventing theft of your intellectual property (patents, trademarks and copyrights), you may wish to consult the U.S. Government website, http://www.stopfakes.gov. Part of a Department of Commerce initiative, this website includes self-help "toolkits" giving innovators guidance on how to protect intellectual property in specific countries such as China, Korea and Mexico. For questions regarding patent enforcement issues, applicants may call the U.S. Government hotline at 1-866-999-HALT (1-866-999-4158).

LICENSE FOR FOREIGN FILING UNDER
Title 35, United States Code, Section 184
Title 37, Code of Federal Regulations, 5.11 & 5.15

GRANTED

The applicant has been granted a license under 35 U.S.C. 184, if the phrase "IF REQUIRED, FOREIGN FILING LICENSE GRANTED" followed by a date appears on this form. Such licenses are issued in all applications where the conditions for issuance of a license have been met, regardless of whether or not a license may be required as set forth in 37 CFR 5.15. The scope and limitations of this license are set forth in 37 CFR 5.15(a) unless an earlier license has been issued under 37 CFR 5.15(b). The license is subject to revocation upon written notification. The date indicated is the effective date of the license, unless an earlier license of similar scope has been granted

under 37 CFR 5.13 or 5.14.

This license is to be retained by the licensee and may be used at any time on or after the effective date thereof unless it is revoked. This license is automatically transferred to any related applications(s) filed under 37 CFR 1.53(d). This license is not retroactive.

The grant of a license does not in any way lessen the responsibility of a licensee for the security of the subject matter as imposed by any Government contract or the provisions of existing laws relating to espionage and the national security or the export of technical data. Licensees should apprise themselves of current regulations especially with respect to certain countries, of other agencies, particularly the Office of Defense Trade Controls, Department of State (with respect to Arms, Munitions and Implements of War (22 CFR 121-128)); the Bureau of Industry and Security, Department of Commerce (15 CFR parts 730-774); the Office of Foreign Assets Control, Department of Treasury (31 CFR Parts 500+) and the Department of Energy.

NOT GRANTED

No license under 35 U.S.C. 184 has been granted at this time, if the phrase "IF REQUIRED, FOREIGN FILING LICENSE GRANTED" DOES NOT appear on this form. Applicant may still petition for a license under 37 CFR 5.12, if a license is desired before the expiration of 6 months from the filing date of the application. If 6 months has lapsed from the filing date of this application and the licensee has not received any indication of a secrecy order under 35 U.S.C. 181, the licensee may foreign file the application pursuant to 37 CFR 5.15(b).

UNITED STATES PATENT AND TRADEMARK OFFICE

Commissioner for Patents
United States Patent and Trademark Office
P.O. Box 1450
Alexandria, VA 22313-1450
www.uspto.gov

FAEGRE & BENSON, LLP
PATENT DOCKETING
90 SOUTH SEVENTH STREET
2200 WELLS FARGO CENTER
MINNEAPOLIS MN 55402

COPY MAILED

JUL 18 2007

OFFICE OF PETITIONS

ON PETITION

In re Application of	:	
Koepke et al.	:	
Application No. 29/256,832	:	
Filed: March 24, 2006	:	
Attorney Docket No. 77012-333470	:	

This is a decision on the petition under 37 CFR 1.182, filed June 19, 2007, to change the order of the names of the inventors.

The petition is **GRANTED**.

The order of the names of the inventors will be changed as follows:

1. Marcus C. KOEPKE
2. John KOCH
3. Jay R. MACHAEL
4. Aaron Michael ICKES

Telephone inquiries should be directed to the undersigned at (571) 272-3206. All other inquiries should be directed to the Publishing Division.

Liana Walsh
Petitions Examiner
Office of Petitions

Enclosure: Corrected Filing Receipt

UNITED STATES PATENT AND TRADEMARK OFFICE

UNITED STATES DEPARTMENT OF COMMERCE
United States Patent and Trademark Office
Address: COMMISSIONER FOR PATENTS
P.O. Box 1450
Alexandria, Virginia 22313-1450
www.uspto.gov

APPL NO.	FILING OR 371(c) DATE	ART UNIT	FIL FEE REC'D	ATTY.DOCKET NO	TOT CLMS	IND CLMS
29/256,832	03/24/2006	2913	560	77012-333470	1	1

CONFIRMATION NO. 1998

CORRECTED FILING RECEIPT

OC000000024847844

58506
FAEGRE & BENSON, LLP
PATENT DOCKETING
90 SOUTH SEVENTH STREET
2200 WELLS FARGO CENTER
MINNEAPOLIS, MN 55402

Date Mailed: 07/16/2007

Receipt is acknowledged of this nonprovisional patent application. The application will be taken up for examination in due course. Applicant will be notified as to the results of the examination. Any correspondence concerning the application must include the following identification information: the U.S. APPLICATION NUMBER, FILING DATE, NAME OF APPLICANT, and TITLE OF INVENTION. Fees transmitted by check or draft are subject to collection. Please verify the accuracy of the data presented on this receipt. **If an error is noted on this Filing Receipt, please write to the Office of Initial Patent Examination's Filing Receipt Corrections. Please provide a copy of this Filing Receipt with the changes noted thereon. If you received a "Notice to File Missing Parts" for this application, please submit any corrections to this Filing Receipt with your reply to the Notice. When the USPTO processes the reply to the Notice, the USPTO will generate another Filing Receipt incorporating the requested corrections (if appropriate).**

Applicant(s)

Marcus C. Koepke, Indianapolis, IN;
John Koch, Muscatine, IA;
Jay R. Machael, Muscatine, IA;
Aaron Michael Ickes, Davenport, IA;

Power of Attorney: None

Domestic Priority data as claimed by applicant

Foreign Applications

If Required, Foreign Filing License Granted: 05/26/2006

The country code and number of your priority application, to be used for filing abroad under the Paris Convention, is US29/256,832

Projected Publication Date: None, application is not eligible for pre-grant publication

Non-Publication Request: No

Early Publication Request: No

Title

CHAIR

Preliminary Class

D06

PROTECTING YOUR INVENTION OUTSIDE THE UNITED STATES

Since the rights granted by a U.S. patent extend only throughout the territory of the United States and have no effect in a foreign country, an inventor who wishes patent protection in another country must apply for a patent in a specific country or in regional patent offices. Applicants may wish to consider the filing of an international application under the Patent Cooperation Treaty (PCT). An international (PCT) application generally has the same effect as a regular national patent application in each PCT-member country. The PCT process **simplifies** the filing of patent applications on the same invention in member countries, but **does not result** in a grant of "an international patent" and does not eliminate the need of applicants to file additional documents and fees in countries where patent protection is desired.

Almost every country has its own patent law, and a person desiring a patent in a particular country must make an application for patent in that country in accordance with its particular laws. Since the laws of many countries differ in various respects from the patent law of the United States, applicants are advised to seek guidance from specific foreign countries to ensure that patent rights are not lost prematurely.

Applicants also are advised that in the case of inventions made in the United States, the Director of the USPTO must issue a license before applicants can apply for a patent in a foreign country. The filing of a U.S. patent application serves as a request for a foreign filing license. The application's filing receipt contains further information and guidance as to the status of applicant's license for foreign filing.

Applicants may wish to consult the USPTO booklet, "General Information Concerning Patents" (specifically, the section entitled "Treaties and Foreign Patents") for more information on timeframes and deadlines for filing foreign patent applications. The guide is available either by contacting the USPTO Contact Center at 800-786-9199, or it can be viewed on the USPTO website at http://www.uspto.gov/web/offices/pac/doc/general/index.html.

For information on preventing theft of your intellectual property (patents, trademarks and copyrights), you may wish to consult the U.S. Government website, http://www.stopfakes.gov. Part of a Department of Commerce initiative, this website includes self-help "toolkits" giving innovators guidance on how to protect intellectual property in specific countries such as China, Korea and Mexico. For questions regarding patent enforcement issues, applicants may call the U.S. Government hotline at 1-866-999-HALT (1-866-999-4158).

LICENSE FOR FOREIGN FILING UNDER
Title 35, United States Code, Section 184
Title 37, Code of Federal Regulations, 5.11 & 5.15

GRANTED

The applicant has been granted a license under 35 U.S.C. 184, if the phrase "IF REQUIRED, FOREIGN FILING LICENSE GRANTED" followed by a date appears on this form. Such licenses are issued in all applications where the conditions for issuance of a license have been met, regardless of whether or not a license may be required as set forth in 37 CFR 5.15. The scope and limitations of this license are set forth in 37 CFR 5.15(a) unless an earlier license has been issued under 37 CFR 5.15(b). The license is subject to revocation upon written notification. The date indicated is the effective date of the license, unless an earlier license of similar scope has been granted

under 37 CFR 5.13 or 5.14.

This license is to be retained by the licensee and may be used at any time on or after the effective date thereof unless it is revoked. This license is automatically transferred to any related applications(s) filed under 37 CFR 1.53(d). This license is not retroactive.

The grant of a license does not in any way lessen the responsibility of a licensee for the security of the subject matter as imposed by any Government contract or the provisions of existing laws relating to espionage and the national security or the export of technical data. Licensees should apprise themselves of current regulations especially with respect to certain countries, of other agencies, particularly the Office of Defense Trade Controls, Department of State (with respect to Arms, Munitions and Implements of War (22 CFR 121-128)); the Bureau of Industry and Security, Department of Commerce (15 CFR parts 730-774); the Office of Foreign Assets Control, Department of Treasury (31 CFR Parts 500+) and the Department of Energy.

NOT GRANTED

No license under 35 U.S.C. 184 has been granted at this time, if the phrase "IF REQUIRED, FOREIGN FILING LICENSE GRANTED" DOES NOT appear on this form. Applicant may still petition for a license under 37 CFR 5.12, if a license is desired before the expiration of 6 months from the filing date of the application. If 6 months has lapsed from the filing date of this application and the licensee has not received any indication of a secrecy order under 35 U.S.C. 181, the licensee may foreign file the application pursuant to 37 CFR 5.15(b).

UNITED STATES PATENT AND TRADEMARK OFFICE

Commissioner for Patents
United States Patent and Trademark Office
P.O. Box 1450
Alexandria, VA 22313-1450
www.uspto.gov

TROXELL LAW OFFICE PLLC
5205 LEESBURG PIKE, SUITE 1404
FALLS CHURCH VA 22041

COPY MAILED

AUG 1 5 2008

OFFICE OF PETITIONS

In re Application of	:	
Chao et al.	:	
Application No. 29/256,847	:	ON PETITION
Filed: March 27, 2006	:	
Attorney Docket No. TB06P0062US	:	

This is a decision on the petition under 37 C.F.R. § 1.137(b), filed June 12, 2008, to revive the above-identified application.

The petition is **DISMISSED**.

Any request for reconsideration must be submitted within TWO (2) MONTHS from the mail date of this decision. No further petition fee is required for the request. Extensions of time under 37 CFR 1.136(a) are permitted. The reconsideration request should include a cover letter entitled "Renewed Petition under 37 CFR 1.137(b)." This is **not** a final agency action within the meaning of 5 U.S.C. § 704.

The application became abandoned for failure to timely reply to the Notice to File Corrected Application Papers (Notice) mailed August 28, 2007, which set a period for reply of thirty (30) days. Accordingly, this application became abandoned on September 29, 2007. A Notice of Abandonment was mailed on November 2, 2007.

A grantable petition under 37 CFR 1.137(b) must be accompanied by:
(1) the required reply,[1]
(2) the petition fee,
(3) a statement that the entire delay in filing the required reply from the due date for the reply until the filing of a grantable petition pursuant to 37 CFR 1.137(b) was unintentional, and
(4) a terminal disclaimer and fee if the application was filed on or before June 8, 1995 or if the application is a design application.

Where there is a question as to whether either the abandonment or the delay in filing a petition under 37 CFR 1.137 was unintentional, the Commissioner may require additional information.[2]

The instant petition lacks item(s) (1). The Notice mailed in August 2007 states, "Applicant must provide a declaration or Application Data Sheet showing the second Inventor's complete mailing address for printing on the Front Page of the issued patent." A copy of the Notice is enclosed for petitioner's convenience.

Petitioner submitted $410.00 towards payment of the issue fee with the instant petition. However, the issue fee was previously submitted on July 18, 2007. Accordingly, the $410.00 submitted with the instant petition is unnecessary and will be refunded via treasury check in due course.

---

[1] In a nonprovisional application abandoned for failure to prosecute, the required reply may be met by the filing of a continuing application. In an application or patent, abandoned or lapsed for failure to pay the issue fee or any portion thereof, the required reply must be the payment of the issue fee or any outstanding balance thereof.

[2] See MPEP 711.03(c)(III)(C) and (D).

Further, the petition must be signed by:

(1) An attorney or agent of record appointed in compliance with § 1.34(b);
(2) A registered attorney or agent not of record who acts in a representative capacity under the provisions of § 1.34(a);
(3) The assignee of record of the entire interest, if there is an assignee of record of the entire interest;
(4) An assignee of record of an undivided part interest, and any assignee(s) of the remaining interest and any applicant retaining an interest, if there is an assignee of record of an undividing part interest; or
(5) All of the applicants (§§ 1.42. 1.43 and 1.47) for patent, unless there is an assignee of record of the entire interest and such assignee has taken action in the application in accordance with §§ 3.71 and 3.73.

The instant petition was only signed by one of the two listed inventors. Any renewed petition must be signed by both Kuo-Chih Chao and Chia-Pin Chen.

While a courtesy copy of this decision is being mailed to the person signing the instant petition, all future correspondence will be directed solely to the address currently of record until such time as appropriate instructions are received to the contrary.

Further correspondence with respect to this matter should be addressed as follows:

By mail: Mail Stop PETITIONS
Commissioner for Patents
Post Office Box 1450
Alexandria, VA 22313-1450

By hand: Customer Window located at:
U.S. Patent and Trademark Office
Customer Service Window Randolph Building
401 Dulany Street
Alexandria, VA 22314

By fax: (571) 273-8300
ATTN: Office of Petitions

Any questions concerning this matter may be directed to the undersigned at (571) 272-3206.

Liana Walsh
Petitions Examiner
Office of Petitions

cc:

KUO-CHIH CHAO
235 P.O. BOX 8-24, CHUNG-HO
TAIPEI HSIEN, TAIWAN, R.O.C.

UNITED STATES PATENT AND TRADEMARK OFFICE

Commissioner for Patents
United States Patent and Trademark Office
P.O. Box 1450
Alexandria, VA 22313-1450
www.uspto.gov

TROXELL LAW OFFICE PLLC
5205 LEESBURG PIKE, SUITE 1404
FALLS CHURCH VA 22041

COPY MAILED

NOV 06 2008

OFFICE OF PETITIONS

In re Application of	:	
Chao et al.	:	
Application No. 29/256,847	:	ON PETITION
Filed: March 27, 2006	:	
Attorney Docket No. TB06P0062US	:	

This is a decision on the renewed petition under 37 C.F.R. § 1.137(b), filed October 23, 2008, to revive the above-identified application.

The petition is **DISMISSED**.

Any request for reconsideration must be submitted within TWO (2) MONTHS from the mail date of this decision. No further petition fee is required for the request. Extensions of time under 37 CFR 1.136(a) are permitted. The reconsideration request should include a cover letter entitled "Renewed Petition under 37 CFR 1.137(b)." This is **not** a final agency action within the meaning of 5 U.S.C. § 704.

A grantable petition under 37 CFR 1.137(b) must be accompanied by:
(1) the required reply,[1]
(2) the petition fee,
(3) a statement that the entire delay in filing the required reply from the due date for the reply until the filing of a grantable petition pursuant to 37 CFR 1.137(b) was unintentional, and
(4) a terminal disclaimer and fee if the application was filed on or before June 8, 1995 or if the application is a design application.

Where there is a question as to whether either the abandonment or the delay in filing a petition under 37 CFR 1.137 was unintentional, the Commissioner may require additional information.[2]

The instant petition continues to lack item(s) (1). The Office acknowledges that the renewed petition has now been signed by both of the inventors. However, petitioner has still not complied with the Notice to File Corrected Application Papers mailed August 28, 2007. As stated in the previous petition decision, "Applicant must provide a declaration or Application Data Sheet

---

[1] In a nonprovisional application abandoned for failure to prosecute, the required reply may be met by the filing of a continuing application. In an application or patent, abandoned or lapsed for failure to pay the issue fee or any portion thereof, the required reply must be the payment of the issue fee or any outstanding balance thereof.

[2] See MPEP 711.03(c)(III)(C) and (D).

showing the second Inventor's complete mailing address for printing on the Front Page of the issued patent." A copy of the Notice is enclosed.

The file does not indicate a change of address has been submitted, although the address given on the petition differs from the address of record. If appropriate, a request to change the address of record should be filed. A courtesy copy of this decision is being mailed to the address given on the petition; however, the Office will mail all future correspondence solely to the address of record.

Further correspondence with respect to this matter should be addressed as follows:

By mail: Mail Stop PETITIONS
Commissioner for Patents
Post Office Box 1450
Alexandria, VA 22313-1450

By hand: Customer Window located at:

U.S. Patent and Trademark Office
Customer Service Window Randolph Building
401 Dulany Street
Alexandria, VA 22314

By fax: (571) 273-8300
ATTN: Office of Petitions

Any questions concerning this matter may be directed to the undersigned at (571) 272-3206.

Liana Walsh
Petitions Examiner
Office of Petitions

cc: KUO-CHIH CHAO
235 P.O. BOX 8-24, CHUNG-HO
TAIPEI HSIEN, TAIWAN, R.O.C.

Enclosure: Notice to File Corrected Application Papers

UNITED STATES PATENT AND TRADEMARK OFFICE

Commissioner for Patents
United States Patent and Trademark Office
P.O. Box 1450
Alexandria, VA 22313-1450
www.uspto.gov

Application No. : 29/256,847
Applicant : Chao et al.
Filing Date : 3/27/06
Date Mailed : 8/28/07

NOTICE TO FILE CORRECTED APPLICATION PAPERS

Notice of Allowance Mailed

This application has been accorded an Allowance Date and is being prepared for issuance. The application, however, is incomplete for the reasons below.

Applicant is given 30 days from the mail date of this Notice within which to correct the informalities indicated below. If the informality pertains to the abstract, specification (including claims) or drawings, the informality must be corrected with an amendment in compliance with 37 CFR 1.121 (or, if the application is a reissue application, 37 CFR 1.173). Such an amendment may be filed after payment of the issue fee if limited to correction of informalities noted herein. See Waiver of 37 CFR1.312 for Documents Required by the Office of Patent Publication, 1280 Off. Gaz. Patent Office 918 (March 23, 2004). In addition, if the informality is not corrected until after payment of the issue fee, for purposes of 35 U.S.C. 154(b)(1)(iv), "all outstanding requirements" will be considered to have been satisfied when the informality has been corrected. A failure to reply will result in the application being ABANDONED. **This period for reply is NOT extendable under 37 CFR 1.136(a).**

Applicant must provide a declaration or Application Data Sheet showing the second Inventor's complete mailing address for printing on the Front Page of the issued patent.

A copy of this notice MUST be returned with the reply. Please address response to "Mail Stop Issue Fee,Commissioner for Patents, P.O. Box 1450, Alexandria, VA 22313-1450".

Dale G. Olson
Office of Patent Publication
Phone: 703-308-9250 ext. 122

UNITED STATES PATENT AND TRADEMARK OFFICE

Commissioner for Patents
United States Patent and Trademark Office
P.O. Box 1450
Alexandria, VA 22313-1450
www.uspto.gov

TROXELL LAW OFFICE PLLC
5205 LEESBURG PIKE, SUITE 1404
FALLS CHURCH VA 22041

COPY MAILED

MAR 2 5 2009

OFFICE OF PETITIONS

In re Application of	:	
Chao et al.	:	
Application No. 29/256,847	:	ON PETITION
Filed: March 27, 2006	:	
Attorney Docket No. TB06P0062US	:	

This is a decision on the renewed petition under 37 C.F.R. § 1.137(b), filed December 9, 2008, to revive the above-identified application.

The petition is **GRANTED**.

The petition now satisfies the requirements of 37 CFR 1.137(b) in that petitioners have supplied the Oath required by the Notice to File Corrected Application Papers.

The file does not indicate a change of address has been submitted, although the address given on the petition differs from the address of record. If appropriate, a request to change the address of record should be filed. A courtesy copy of this decision is being mailed to the address given on the petition; however, the Office will mail all future correspondence solely to the address of record.

Telephone inquiries concerning this decision should be directed to the undersigned at (571) 272-3206.

This matter is being referred to the Office of Data Management for processing into a patent.

Liana Walsh
Petitions Examiner
Office of Petitions

cc:

KUO-CHIN CHAO
235 P.O. BOX 8-24, CHUNG-HO
TAIPEI HSIEN, TAIWAN, R.O.C.

UNITED STATES PATENT AND TRADEMARK OFFICE

Commissioner for Patents
United States Patent and Trademark Office
P.O. Box 1450
Alexandria, VA 22313-1450
www.uspto.gov

Paper No.

LEYDIG VOIT & MAYER, LTD
TWO PRUDENTIAL PLAZA
SUITE 4900
180 NORTH STETSON AVENUE
CHICAGO IL 60601-6731

COPY MAILED

NOV 09 2007

OFFICE OF PETITIONS

In re Application of	:	
Belitz et al.	:	DECISION ON
Application No. 29/256,908	:	PETITION
Filed: March 27, 2006	:	
Attorney Docket No. 250829	:	

This is a decision on the petition filed July 17, 2007, pursuant to 37 C.F.R. § 1.137(b), to revive the above-identified application.

The petition is **DISMISSED**.

Any request for reconsideration of this decision must be submitted within **TWO (2) MONTHS** from the mail date of this decision. Extensions of time under 37 C.F.R. § 1.136(a) are permitted. The reconsideration request should include a cover letter entitled "Renewed Petition under 37 C.F.R. § 1.137(b)."

The above-identified application became abandoned for failure to timely pay the required issue fee within the statutory period of three months from the mailing date, October 27, 2006, of the Notice of Allowance[1] or to otherwise file a proper response. A request for continued examination (RCE) was filed on Monday, January 29, 2007. As the filing of an RCE in a design application is improper and an RCE cannot be converted to a

[1] No publication fee was due. Additionally, the Notice of Allowability accepted the drawings filed March 27, 2006.

continued prosecution application (CPA)[2], this response was not sufficient to prevent abandonment of the application (See Notice of Improper Request for Continued Examination (RCE) mailed March 30, 2007). No extensions of time are permitted for submitting issue fees. Accordingly, the application became abandoned effective January 28, 2007. A Notice of Abandonment was mailed on July 6, 2007.

The provisions of 37 C.F.R. § 1.137(b) provide that where the delay in reply was unintentional, a petition may be filed to revive an abandoned application or a lapsed patent. A petition filed pursuant to 37 C.F.R. §1.137(b) must be accompanied by:

(1) The reply required to the outstanding Office action or notice, unless previously filed;

(2) The petition fee as set forth in § 1.17(m);

(3) A statement that the entire delay in filing the required reply from the due date for the reply until the filing of a grantable petition pursuant to this paragraph was unintentional. The Director may require additional information where there is a question whether the delay was unintentional; and

(4) Any terminal disclaimer (and fee as set forth in § 1.20(d)) required pursuant to paragraph (d) of this section.

The petition includes the required reply in the form of payment of the issue fee, payment of the petition fee, and the required statement of unintentional delay.

Receipt of a continued prosecution application (CPA) on May 15, 2007 is acknowledged. (It is noted that a 1449 with respect to the IDS filed October 26, 2006 was mailed on April 4, 2007).

---

[2] As stated in MPEP 706.07(h)

If, however, applicant files an unambiguous transmittal paper that is an RCE in a design application, it will be treated as an improper RCE and a "Notice of Improper Request for Continued Examination (RCE)," Form PTO-2051, will be mailed to the applicant. An RCE is not a type of new application filing. Therefore, the Office cannot convert an RCE (whether proper or improper) to a new application such as a CPA under 37 CFR 1.53(d).

However, this petition does not satisfy requirement (4) above. No terminal disclaimer and fee were submitted with this petition.

Further correspondence with respect to this matter should be addressed as follows:

By mail: Mail Stop Petition
Commissioner for Patents
P.O. Box 1450
Alexandria, VA 22313-1450

By FAX: (571) 273-8300
Attn: Office of Petitions
ATTN: NANCY JOHNSON

By hand: Customer Service Window
Randolph Building
401 Dulany Street
Alexandria, VA 22314

Telephone inquiries specific to this matter should be directed to the undersigned at (571) 272-3219.

Nancy Johnson
Senior Petitions Attorney
Office of Petitions

UNITED STATES PATENT AND TRADEMARK OFFICE

Commissioner for Patents
United States Patent and Trademark Office
P.O. Box 1450
Alexandria, VA 22313-1450
www.uspto.gov

Paper No.

LEYDIG VOIT & MAYER, LTD
TWO PRUDENTIAL PLAZA
SUITE 4900
180 NORTH STETSON AVENUE
CHICAGO IL 60601-6731

COPY MAILED

DEC 31 2007

OFFICE OF PETITIONS

In re Application of	:	
Belitz et al.	:	DECISION ON
Application No. 29/256,908	:	PETITION
Filed: March 27, 2006	:	
Attorney Docket No. 250829	:	

This is a decision on the RENEWED PETITION UNDER 37 CFR § 1.137(b) filed December 20, 2007.

The petition is **GRANTED**.

The above-identified application became abandoned effective January 28, 2007 for failure to timely pay the required issue fee within the statutory period of three months from the mailing date, October 27, 2006, of the Notice of Allowance[1] or to otherwise file a proper response. A Notice of Abandonment was mailed on July 6, 2007.

By decision mailed November 9, 2007, the initial petition to revive filed July 17, 2007 was dismissed. The petition included the required reply in the form of payment of the issue fee, payment of the petition fee, and the required statement of unintentional delay. The petition did not include the required terminal disclaimer and fee.

---

[1] No publication fee was due. Additionally, the Notice of Allowability accepted the drawings filed March 27, 2006.

On instant renewed petition, petitioner submitted a terminal disclaimer and fee.

The terminal disclaimer is accepted and made of record.

The Office of Patent Publication has been advised of this decision. The application is, thereby, forwarded to the Publishing Division for processing into a patent.

Telephone inquiries specific to this matter should be directed to the undersigned at (571) 272-3219.

Nancy Johnson
Senior Petitions Attorney
Office of Petitions

PTO/SB/27 (05-03)
Approved for use through 04/30/2003. OMB 0651-0031
U.S. Patent and Trademark Office; U.S. DEPARTMENT OF COMMERCE
Under the Paperwork Reduction Act of 1995, no persons are required to respond to a collection of information unless it displays a valid OMB control number.

REQUEST FOR EXPEDITED EXAMINATION OF A DESIGN APPLICATION (37 CFR 1.155)

Application Number	TBD
Filing Date	Herewith
First Named Inventor	David Roulo
Title	Portion Of A Shoe Upper
Atty Docket Number	015127.00688

113006 U.S. PTO
29/256961
032806

HAND DELIVER TO THE DESIGN GROUP DIRECTOR'S OFFICE
-or- ADDRESS TO:
MAIL STOP EXPEDITED DESIGN
COMMISSIONER FOR PATENTS
P.O. Box 1450
Alexandria, VA 22313-1450

This is a request for expedited examination of a design application under 37 CFR 1.155.

NOTE: If the Request made by this form accompanies original application papers, include form PTO/SB/18 "Design Patent Application Transmittal" or its equivalent.

A preexamination search was conducted. The field of search was:

D2 896, 902, 907, 908, 943, 944, 945, 946, 969, 972, 973 and 974

Related applications: _____

If not previously filed for the above-identified application, the following items required by 37 CFR 1.155 are enclosed:

Formal drawings (see 37 CFR 1.84).

The fee set forth in 37 CFR 1.17(k).

An information disclosure statement in compliance with 37 CFR 1.98.

4-6-06
Approved
Jacqueline M. Stone
Jacqueline M. Stone, Director
Technology Center 1700

March 28, 2006
Date

Signature

202-824-3000
Telephone Number

Darrell G. Mottley, Reg. No. 42,912
Typed or printed name

WARNING: Information on this form may become public. Credit card information should not be included on this form. Provide credit card information and authorization on PTO-2038.

This collection of information is required by 37 CFR 1.155. The information is required to obtain or retain a benefit by the public which is to file (and by the USPTO to process) an application. Confidentiality is governed by 35 U.S.C. 122 and 37 CFR 1.14. This collection is estimated to take 6 minutes to complete, including gathering, preparing, and submitting the completed application form to the USPTO. Time will vary depending upon the individual case. Any comments on the amount of time you require to complete this form and/or suggestions for reducing this burden, should be sent to the Chief Information Officer, U.S. Patent and Trademark Office, U.S. Department of Commerce, P.O. Box 1450, Alexandria, VA 22313-1450. DO NOT SEND FEES OR COMPLETED FORMS TO THIS ADDRESS. SEND TO: Mail Stop Expedited Design, Commissioner for Patents, P.O. Box 1450, Alexandria, VA 22313-1450.

If you need assistance in completing the form, call 1-800-PTO-9199 and select option 2.

03/29/2006 JBALINAN 00000110 190733 29256961
04 FC:1802 900.00 DA

PTO/SB/27 (05-03)
Approved for use through 04/30/2003. OMB 0651-0031
U.S. Patent and Trademark Office; U.S. DEPARTMENT OF COMMERCE
Under the Paperwork Reduction Act of 1995, no persons are required to respond to a collection of information unless it displays a valid OMB control number.

REQUEST FOR EXPEDITED EXAMINATION OF A DESIGN APPLICATION (37 CFR 1.155)

Application Number	TBD
Filing Date	Herewith
First Named Inventor	Benjamin Andrew Shaffer
Title	Portion Of A Shoe Upper
Atty Docket Number	015127.00687

113006 U.S. PTO
29/256962
032806

HAND DELIVER TO THE DESIGN GROUP DIRECTOR'S OFFICE
-or- ADDRESS TO:
MAIL STOP EXPEDITED DESIGN
COMMISSIONER FOR PATENTS
P.O. Box 1450
Alexandria, VA 22313-1450

This is a request for expedited examination of a design application under 37 CFR 1.155.

NOTE: If the Request made by this form accompanies original application papers, include form PTO/SB/18 "Design Patent Application Transmittal" or its equivalent.

A preexamination search was conducted. The field of search was:

D2 896, 902, 907, 908, 943, 944, 945, 946, 969, 972, 973 and 974

Related applications: _____

If not previously filed for the above-identified application, the following items required by 37 CFR 1.155 are enclosed:

Formal drawings (see 37 CFR 1.84).

The fee set forth in 37 CFR 1.17(k).

An information disclosure statement in compliance with 37 CFR 1.98.

4-6-06
Approved
Jacqueline M. Stone
Jacqueline M. Stone, Director
Technology Center 1700

March 28, 2006
Date

Darrell G. Mottley
Signature

202-824-3000
Telephone Number

Darrell G. Mottley, Reg. No. 42,912
Typed or printed name

WARNING: Information on this form may become public. Credit card information should not be included on this form. Provide credit card information and authorization on PTO-2038.

This collection of information is required by 37 CFR 1.155. The information is required to obtain or retain a benefit by the public which is to file (and by the USPTO to process) an application. Confidentiality is governed by 35 U.S.C. 122 and 37 CFR 1.14. This collection is estimated to take 6 minutes to complete, including gathering, preparing, and submitting the completed application form to the USPTO. Time will vary depending upon the individual case. Any comments on the amount of time you require to complete this form and/or suggestions for reducing this burden, should be sent to the Chief Information Officer, U.S. Patent and Trademark Office, U.S. Department of Commerce, P.O. Box 1450, Alexandria, VA 22313-1450. DO NOT SEND FEES OR COMPLETED FORMS TO THIS ADDRESS. SEND TO: Mail Stop Expedited Design, Commissioner for Patents, P.O. Box 1450, Alexandria, VA 22313-1450.

If you need assistance in completing the form, call 1-800-PTO-9199 and select option 2.

03/29/2006 JBALINAN 00000109 29256962
04 FC:1802 900.00 DA

PTOISB/27 (09-04)
Approved for use through 07/31/2006. OMB 0651-0031
U.S. Patent and Trademark Office; U.S DEPARTMENT OF COMMERCE
Under the Paperwork Reduction ACT of 1995, no persons are required to respond to collection of information unless it displays a valid OMB control number.

REQUEST FOR EXPEDITED EXAMINATION OF A DESIGN APPLICATION (37 CFR 1.155)

Application Number	To be assigned
Filing Date	To be assigned
First Named Inventor	Jean-Francois Fullum
Title	PORTION OF A SHOE UPPER
Attorney Docket Number	2465-7606US

ADDRESS TO:
MAIL STOP EXPEDITED DESIGN
COMMISSION FOR PATENTS
P.O. BOX 1450
Alexandria, VA 22313-1450

Approved 4-6-06
Jacqueline M. Stone
Jacqueline M. Stone, Director
Technology Center 1700

113006 U.S. PTO
29/256963
032806

This is a request for expedited examination of a design application under 37 CER 1.155.

NOTE: If the Request made by this form accompanies original application papers, include form PTO/SB/18 "Design Patent Application Transmittal" or its equivalent.

A preexamination search was conducted. The field of search was:

US. CL. D2/896, D2/897, D2/902, D2/907, D2/908, D2/910 D2/911, D2/912, D2/916, D2/922, D2/935, D2/969, D2/970, D2/971, D2/972, 36/45, 36/50.1, 36/83, 36/88, 36/89, 36/93, 36/101, 36/102, 36/103, 36/104, 36/106, 36/108, 36/109, 36/113, 36/114, 36/115, 36/116, 36/126, 36/127, 36/128, 36/129, 36/130

Related applications: _____

If not previously filed for the above-identified application, the following items required by 37 CFR 1.155 are enclosed:

- Formal drawings (see 37 CFR 1.84).
- The fee set forth in 37 CFR 1.17(k).
- An information disclosure statement in compliance with 37 CFR 1.98.

Signature	28 March 2006 Date
Laurence B. Bond Typed or printed name	30,549 Registration Number, if applicable
(801) 532-1922 Telephone Number	

WARNING: Information on this form may become public. Credit card information should not be included on this form. Provide credit card information and authorization on PTO-2038.

This collection of information is required by37 CFR 1.155. The information is required to obtain or retain a benefit by the public which is to file (and by the USPTO to process) an application. Confidentiality is governed by 35 U.S.C. 122 and 37 CFR 1.11 and 1.14. This collection is estimated to take 6 minutes to complete, including gathering, preparing, and submitting the completed application form to the USPTO. Time will vary depending upon the individual case. Any comments on the amount of time you require to complete this form and/or suggestions for reducing this burden, should be sent to the Chief Information Officer, U.S. Patent and Trademark Office, U.S. Department of Commerce, P.O. Box 1450, Alexandria, VA 22313-1450. DO NOT SEND FEES OR COMPLETED FORMS TO THIS ADDRESS. SEND TO: Commissioner for Patents, P.O. Box 1450, Alexandria, VA 22343-1450.
If you need assistance in completing the form, call 1-800-PTO-9199 and select option 2.

03/30/2006 SSEGHE1 00000052 29256963
04 FC:1002 900.00 OP

UNITED STATES PATENT AND TRADEMARK OFFICE

Commissioner for Patents
United States Patent and Trademark Office
P.O. Box 1450
Alexandria, VA 22313-1450
www.uspto.gov

TRASKBRITT
P O BOX 2550
SALT LAKE CITY, UT 84110

COPY MAILED
APR 17 2007
OFFICE OF PETITIONS

In re Application of :
Jean-Francois Fullum :
Application No. 29/256,963 : DECISION ON PETITION
Filed: March 28, 2006 :
Attorney Docket No. 2465-7606US :

This is a decision on the petition under 37 CFR 1.181, filed December 22, 2006, requesting withdrawal of the holding of abandonment or, in the alternative, as a petition under 37 CFR 1.137(b), to revive the above-identified design application.[1]

The petition under 37 CFR 1.181 is **DISMISSED.**

The petition under 37 CFR 1.137(b) is **GRANTED.**

This application became abandoned for failure to timely pay the $800 issue fee on or before August 4, 2006, as required by the Notice of Allowance and Fee(s) Due, mailed May 4, 2006. A Notice of Abandonment was mailed on December 7, 2006.

DISCUSSION OF PETITION UNDER 37 CFR 1.181

Petitioner states that the Part B form was received by the Office on May 11, 2006, which included an authorization to charge the issue fee to Deposit Account No. 20-1469. Petitioner further states that there were sufficient funds in petitioner's deposit account at the relevant time to charge the $800 issue fee due. In support of this assertion, petitioner has supplied a copy of his "Monthly Statement of Deposit Account." Additionally, petitioner states that the "Monthly Statement of Deposit Account" contains no indication that the deposit account was overdrawn at any time during the period in question.

In view of the fact that there appeared to be sufficient funds in petitioner's deposit account at the time to charge the $800 issue

[1] It is noted that a petition for expedited treatment was concurrently filed with the petition. However, expedited treatment was not given to the petition to revive. Accordingly, the $130 fee assessed for the petition will be refunded to petitioner's deposit account.

fee, an inquiry was made to the Office of Finance to determine why the Office was unable to charge the issue fee. In reply, the Office of Finance sent a statement of the deposit account to the undersigned (copy of which is attached) listing all the transactions, which occurred during the month of May of 2006. The statement shows that there were indeed insufficient funds on May 12, 2006, the date the Office attempted to charge the $800 issue fee.

Petitioner has not complied with 37 CFR 1.25 which states that "[a]n authorization to charge a fee to a deposit account will not be considered payment of the fee on the date the authorization to charge the fee is effective as to the particular fee to be charged unless sufficient funds are present in the account to cover the fee." In view thereof, the holding of abandonment was proper and will not be withdrawn.

DISCUSSION OF PETITION UNDER 37 CFR 1.137(b)

The petition satisfies the requirements of 37 CFR 1.137(b) in that petitioner has supplied (1) the reply in the form of the $800 issue fee payment, (2) the petition fee of $1,500, (3) a proper statement of unintentional delay, and (4) a terminal disclaimer and fee as required by 37 CFR 1.137(d).

The terminal disclaimer is accepted and has been made of record. Any continuing application filed from this application must contain a copy of the terminal disclaimer. The copy of the terminal disclaimer must be filed with a cover letter requesting the terminal disclaimer be recorded on the continuing application. A copy of this decision should be attached to the cover letter.

Telephone inquiries concerning this decision should be directed to the undersigned at (571) 272-3218.

This application is being referred to Publishing Division for appropriate action in accordance with this decision reviving the application.

Frances Hicks

Frances Hicks
Petitions Examiner
Office of Petitions

ATTACHMENT: Copy of Deposit Account Statement for May 2006

Deposit Account Statement

Requested Statement Month: May-06
Deposit Account Number: 201469
Name: TRASK & BRITT
Attention:
Address: P O BOX 2550
City: SALT LAKE CITY
State: UT
Zip: 84110
Country: UNITED STATES

DATE	SEQ	POSTING REF TXT	ATTORNEY DOCKET NBR	FEE CODE	AMT	BAL
1-May	4	5727894		9204	($1,215.00)	$10,616.90
2-May	115	29236473	2465-7212US	1502	$800.00	$9,816.90
2-May	116	29236473	2465-7212US	8001	$30.00	$9,786.90
2-May	117	29237358	2465-7212.1US	1502	$800.00	$8,986.90
2-May	118	29237358	2465-7212.1US	8001	$30.00	$8,956.90
2-May	1	P112024	2465-7763	1463	$200.00	$8,756.90
2-May	2	P112023	2465-7762	1463	$200.00	$8,556.90
2-May	3	P112022		1463	$200.00	$8,356.90
2-May	4	P112021	24657773	1463	$200.00	$8,156.90
2-May	5	P112020	24657771	1463	$200.00	$7,956.90
3-May	64	29245132	2465-7477.1US	1502	$800.00	$7,156.90
3-May	131	10618526	2578-3833.9US	1814	$130.00	$7,026.90
3-May	210	9058602	3207-7775US	8008	$200.00	$6,826.90
3-May	364	60496830	2923-6033.1US	8021	$120.00	$6,706.90
4-May	1	E-REPLENISHMENT		9203	($5,790.00)	$12,496.90
4-May	23	SUBSCRIPTION		8001	$6.00	$12,490.90
4-May	29	SUBSCRIPTION		8001	$33.00	$12,457.90
5-May	65	60772805	3015-7672US	8007	$20.00	$12,437.90
5-May	66	60684126	3015-7190US	8007	$20.00	$12,417.90
5-May	67	60678090	3015-6872US	8007	$20.00	$12,397.90

5-May	722	78876922	325	7001	$325.00	$12,072.90
5-May	1328	10977509	2183-5341.1US	1255	$2,160.00	$9,912.90
8-May	886	78878126	2792-TM2456US	7001	$650.00	$9,262.90
8-May	137	29251574	2465-7474.1US	1502	$800.00	$8,462.90
8-May	138	29251574	2465-7474.1US	8001	$30.00	$8,432.90
8-May	139	29252773	2465-7472US	1502	$800.00	$7,632.90
8-May	140	29252773	2465-7472US	8001	$30.00	$7,602.90
8-May	141	29236691	2465-7332.1US	1502	$800.00	$6,802.90
8-May	142	29236691	2465-7332.1US	8001	$30.00	$6,772.90
8-May	143	29252774	2465-7617.1US	1502	$800.00	$5,972.90
8-May	144	29252774	2465-7617.1US	8001	$30.00	$5,942.90
8-May	198	29175208	1197-5679US	2502	$400.00	$5,542.90
8-May	199	29175208	1197-5679US	8001	$30.00	$5,512.90
8-May	44	E-REPLENISHMENT		9203	($8,546.00)	$14,058.90
8-May	21	P112045	24657797	1463	$200.00	$13,858.90
8-May	22	P112044	24657760	1463	$200.00	$13,658.90
8-May	23	P112043	24657761	1463	$200.00	$13,458.90
8-May	24	P112042	24657764	1463	$200.00	$13,258.90
8-May	25	P112041	24657768	1463	$200.00	$13,058.90
8-May	26	P112040		1463	$200.00	$12,858.90
8-May	27	P112039	24657765	1463	$200.00	$12,658.90
8-May	28	P112038	24657770	1463	$200.00	$12,458.90
10-May	1	10789465	0274-5456.1US	2253	$265.00	$12,193.90
10-May	2	10789465	0274-5456.1US	2201	$100.00	$12,093.90
10-May	27	9780205	4753US	1251	($120.00)	$12,213.90
11-May	23	SUBSCRIPTION		8001	$3.00	$12,210.90
11-May	31	SUBSCRIPTION		8001	$15.00	$12,195.90
11-May	729	76323894	1858-TM1728US	7004	$150.00	$12,045.90
11-May	59	60677226	2820-7174TW	8007	$40.00	$12,005.90
12-May	109	29255266	2465-7579US	1502	$800.00	$11,205.90
12-May	110	29255266	2465-7579US	8001	$30.00	$11,175.90
12-May	111	29255091	2465-7607US	1502	$800.00	$10,375.90
12-May	112	29255091	2465-7607US	8001	$30.00	$10,345.90
12-May	113	29255399	2465-7576US	1502	$800.00	$9,545.90
12-May	114	29255399	2465-7576US	8001	$30.00	$9,515.90
12-May	115	29255264	2465-7612US	1502	$800.00	$8,715.90

12-May	116	29255264	2465-7612US	8001	$30.00	$8,685.90	
12-May	117	29255267	2465-7602US	1502	$800.00	$7,885.90	
12-May	118	29255267	2465-7602US	8001	$30.00	$7,855.90	
12-May	122	29255265	2465-7616US	1502	$800.00	$7,055.90	
12-May	123	29255265	2465-7616US	8001	$30.00	$7,025.90	
12-May	124	29255263	2465-7577US	1502	$800.00	$6,225.90	
12-May	125	29255263	2465-7577US	8001	$30.00	$6,195.90	
12-May	126	29255507	2465-7605US	1502	$800.00	$5,395.90	
12-May	127	29255507	2465-7605US	8001	$30.00	$5,365.90	
12-May	128	29255506	2456-7615US	1502	$800.00	$4,565.90	
12-May	129	29255506	2456-7615US	8001	$30.00	$4,535.90	
12-May	130	29255504	2140354-000003	1502	$800.00	$3,735.90	
12-May	131	29255504	2140354-000003	8001	$30.00	$3,705.90	
12-May	132	29255597	2465-7614US	1502	$800.00	$2,905.90	
12-May	133	29255597	2465-7614US	8001	$30.00	$2,875.90	
12-May	136	29255398	2465-7598US	1502	$800.00	$2,075.90	
12-May	137	29255398	2465-7598US	8001	$30.00	$2,045.90	
12-May	139	29236690	2465-7332US	1502	$800.00	$1,245.90	
12-May	140	29236690	2465-7332US	8001	$30.00	$1,215.90	
12-May	141	29256105	US2465-7	1502	$800.00	$415.90	
12-May	142	29256105	US2465-7	8001	$30.00	$385.90	
12-May	143	29256963	2465-7606US	8001	$30.00	$355.90	
12-May	144	29252845	2466-7617US	8001	$30.00	$325.90	
12-May	145	29255166	2465-757US	8001	$30.00	$295.90	
12-May	154	29255090	2465-7613US	8001	$30.00	$265.90	time of transaction 5/1
12-May	42	E-REPLENISHMENT		9203	($9,457.00)	$9,722.90	replenishment time 10:
15-May	2133	78329169	TM1998US	7004	$300.00	$9,422.90	
16-May	1	10295814	ARC 3267R1	1251	$120.00	$9,302.90	
17-May	54	78291342	TM1971US	7003	$100.00	$9,202.90	
17-May	107	78291342	TM1971US	7004	$150.00	$9,052.90	
17-May	102	11140791	2269-6679TW	8007	$20.00	$9,032.90	
18-May	34	SUBSCRIPTION		8001	$27.00	$9,005.90	
18-May	135	29245133	2465-7477US	1502	$800.00	$8,205.90	
18-May	136	29245133	2465-7477US	8001	$30.00	$8,175.90	

18-May	70	9679664	728271801	1801	$790.00	$7,385.90
19-May	56	6039820	2507-5818US	8021	$40.00	$7,345.90
19-May	64	6039820	2507-5818US	8021	$40.00	$7,305.90
19-May	30	29210415	40059-0018	1464	$130.00	$7,175.90
19-May	31	29210415	40059-0018	2017	$100.00	$7,075.90
22-May	171	10286600	0274-2278.4US	8021	$40.00	$7,035.90
22-May	176	10286600	0274-2278.4US	8021	$40.00	$6,995.90
22-May	56	E-REPLENISHMENT		9203	($20,830.00)	$27,825.90
23-May	59	151390697	2507-7812US	8014	$25.00	$27,800.90
24-May	831	78291330	TM1903US	7004	$300.00	$27,500.90
24-May	396	6423895	2507-7807.2US ET AL.	8021	$960.00	$26,540.90
25-May	8	6825553	2269-5377.1SG JMM/CSK	8013	$25.00	$26,515.90
25-May	1	10081799	4428.1US	2401	$250.00	$26,265.90
25-May	2	10081799	4428.1US	2252	$225.00	$26,040.90
25-May	907	2446446	2422-TM1576US	7205	$100.00	$25,940.90
25-May	908	2446446	2422-TM1576US	7208	$200.00	$25,740.90
25-May	22	SUBSCRIPTION		8001	$3.00	$25,737.90
25-May	34	SUBSCRIPTION		8001	$48.00	$25,689.90
25-May	215	29260259	2465-7763US	1012	$200.00	$25,489.90
25-May	216	29260259	2465-7763US	1112	$100.00	$25,389.90
25-May	217	29260259	2465-7763US	1312	$130.00	$25,259.90
25-May	218	29260259	2465-7763US	1802	$900.00	$24,359.90
25-May	219	29260260	2465-7767US	1012	$200.00	$24,159.90
25-May	220	29260260	2465-7767US	1112	$100.00	$24,059.90
25-May	221	29260260	2465-7767US	1312	$130.00	$23,929.90
25-May	222	29260260	2465-7767US	1802	$900.00	$23,029.90
25-May	149	60683266	0120 US P00 PRO	8007	$20.00	$23,009.90
25-May	157	11170260	04-0998.00/US	8007	$20.00	$22,989.90
25-May	110	29260260	2465-7767US	8021	$40.00	$22,949.90
25-May	111	29260259	2465-7763US	8021	$40.00	$22,909.90
25-May	1521	78892565	3030-TM2463US	7001	$975.00	$21,934.90
30-May	66	9058602	3207-7775US	8008	($200.00)	$22,134.90
30-May	176	6088925	2507-5912.1US	8021	$40.00	$22,094.90

30-May	798	78287017	2102-TM1972	7004	$150.00	$21,944.90
30-May	83	11415542	3270-7786US	1202	$550.00	$21,394.90
30-May	85	11415542	3270-7786US	1203	$360.00	$21,034.90
31-May	13	5074522	2617.01-7361US	8021	$40.00	$20,994.90
31-May	21	5074522	2617.01-7361US	8021	$40.00	$20,954.90
31-May	142	11069823	2183-4541.1US	8021	$40.00	$20,914.90
31-May	150	11069823	2183-4541.1US	8021	$40.00	$20,874.90

START BALANCE	SUM OF CHARGES	SUM OF REPLENISH	END BALANCE
$9,401.90	$34,685.00	$46,158.00	$20,874.90

UNITED STATES PATENT AND TRADEMARK OFFICE

Commissioner for Patents
United States Patent and Trademark Office
P.O. Box 1450
Alexandria, VA 22313-1450
www.uspto.gov

GEORGE A. ROLSTON
45 SHEPPARD AVE EAST
SUITE 900
TORONTO ON M2N5W-9 CA CANADA

COPY MAILED

MAY 09 2007

OFFICE OF PETITIONS

In re Application of	:	
Leonardo Verduci	:	
Application No.: 29/257021	:	ON PETITION
Filing or 371(c) Date 03/29/2006	:	
Title of Invention:	:	
PAVING STONE	:	

This is a decision on the Petition for Revival of an Application for Patent Abandoned Unintentionally Under 37 C.F.R. § 1.137(b), filed January 29, 2007.

This Petition is hereby **granted**.

The above-identified application became abandoned for failure to timely and properly reply to the Notice of Allowance and Issue Fee Due, mailed October 19, 2006. The Notice set a non-extendable three (3) month period for reply. No reply having been received, the application became abandoned on January 20, 2007. The mailing of this decision precedes the mailing of a Notice of Abandonment.

Applicant has submitted the issue fee with the instant petition. Corrected drawings in response to the Notice of Allowability were filed on November 1, 2006.

This application is being referred to Publishing Division for processing into a patent.

Telephone inquiries concerning this decision should be directed to the undersigned at (571) 272-3232.

Derek L. Woods
Attorney
Office of Petitions

SPE RESPONSE FOR CERTIFICATE OF CORRECTION

Paper No.: _____

DATE : 05-05-08

TO SPE OF : ART UNIT 2912

SUBJECT : Request for Certificate of Correction for Appl. No.: **29/257023** Patent No.: **D547751**

Please respond to this request for a certificate of correction within 7 days.

Please review the requested changes/corrections as shown in the **COCIN** document(s) in the IFW application image. No new matter should be introduced, nor should the scope or meaning of the claims be changed.

Please complete the response (see below) and forward the completed response to scanning using document code **COCX**.

Angela Green
Certificates of Correction Branch
703.308.9380 ext. 127

Thank You For Your Assistance

The request for issuing the above-identified correction(s) is hereby:
Note your decision on the appropriate box.

- ☐ **Approved** — All changes apply.
- ☐ **Approved in Part** — Specify below which changes **do not** apply.
- ☒ **Denied** — State the reasons for denial below.

Comments: There are no errors. In printing of the patent, there is a prescribed format which does not include capital letters or bold letters.

STELLA M. REID
SUPERVISORY PATENT EXAMINER
SPE

2912
Art Unit

UNITED STATES PATENT AND TRADEMARK OFFICE

CERTIFICATE OF CORRECTION

PATENT NO. : D547,751

DATED: July 31, 2007

INVENTOR(S): Daisuke SHIONO

It is certified that an error appears in the above-identified patent and that said Letters Patent is hereby corrected as shown below:

On the title page, Item (57), the CLAIM and FIG. 1 under the DESCRIPTION are incorrect. The noted portions of Item (57) should read:

-- (57) CLAIM

The ornamental design for a **SPEAKER**, as shown and described.

DESCRIPTION

FIG. 1 is a top and right front perspective view of a **SPEAKER**, showing my design; --.

Mailing address of sender:

Customer Number
22850

Tel. (703) 413-3000
Fax. (703) 413-2220
(OSMMN 03/06)

Patent No. D,547,751

No. of add'l copies
@ .30 per page

US00D547751S

(12) United States Design Patent

Shiono

(10) Patent No.: US D547,751 S
(45) Date of Patent: ** Jul. 31, 2007

(54) **SPEAKER**

(75) Inventor: **Daisuke Shiono**, Tokyo (JP)

(73) Assignee: **Sony Corporation**, Tokyo (JP)

(**) Term: **14 Years**

(21) Appl. No.: **29/257,023**

(22) Filed: **Mar. 29, 2006**

(30) **Foreign Application Priority Data**

Sep. 30, 2005 (CN) 2005 3 0129126

(51) **LOC (8) Cl.** **14-01**
(52) **U.S. Cl.** **D14/216**
(58) **Field of Classification Search** D14/204, D14/209–216, 221; 181/143–144, 147–148, 181/150, 157, 198–199, 151, 153; 381/300–302, 381/306, 333, 345, 361–364, 386–388, 332, 381/336

See application file for complete search history.

(56) **References Cited**

U.S. PATENT DOCUMENTS

D186,670 S * 11/1959 Durbin D14/216
D197,716 S * 3/1964 Boldt et al. D14/216
D409,198 S * 5/1999 Harvey et al. D14/215
D488,802 S * 4/2004 Uehara et al. D14/216

OTHER PUBLICATIONS

U.S. Appl. No. 29/257,024, filed Mar. 29, 2006, Shiono.
U.S. Appl. No. 29/257,023, filed Mar. 29, 2006, Shiono.

* cited by examiner

Primary Examiner—Nanda Bondade
(74) *Attorney, Agent, or Firm*—Oblon, Spivak, McClelland, Maier & Neustadt, P.C.

(57) **CLAIM**

The ornamental design for a speaker, as shown and described.

DESCRIPTION

FIG. **1** is a top and right front perspective view of a speaker, showing my design;

FIG. **2** is a front elevational view of my design;

FIG. **3** is a rear elevational view of my design;

FIG. **4** is a left side elevational view of my design, with the right side elevational view being a mirror image thereof; and,

FIG. **5** is a top plan view of my design, with the bottom plan view being a mirror image thereof.

1 Claim, 5 Drawing Sheets

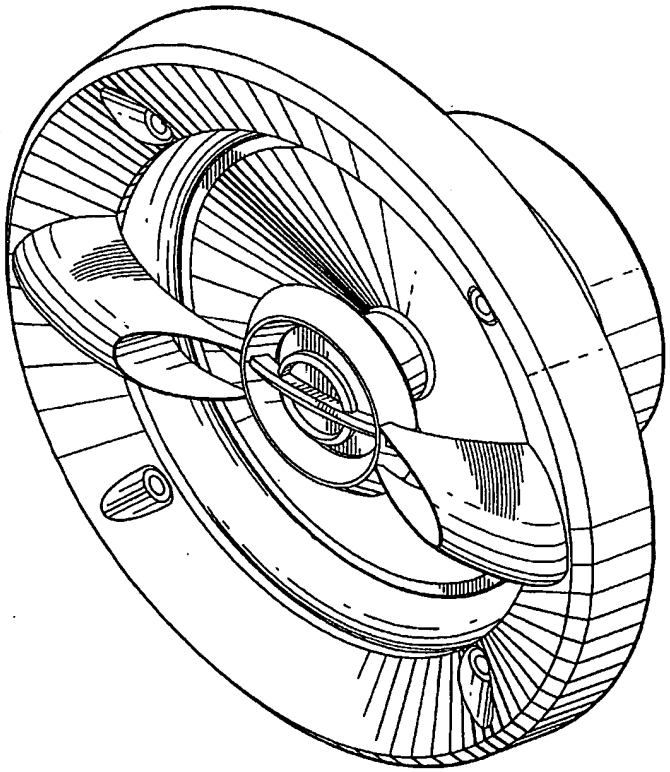

UNITED STATES PATENT AND TRADEMARK OFFICE

CERTIFICATE OF CORRECTION

PATENT NO. : D547,751

DATED: July 31, 2007

INVENTOR(S): Daisuke SHIONO

It is certified that an error appears in the above-identified patent and that said Letters Patent is hereby corrected as shown below:

On the title page, Item (57), the CLAIM and FIG. 1 under the DESCRIPTION are incorrect. The noted portions of Item (57) should read:

-- (57) CLAIM

The ornamental design for a **SPEAKER**, as shown and described.

DESCRIPTION

FIG. 1 is a top and right front perspective view of a **SPEAKER**, showing my design; --.

Mailing address of sender:

Patent No. D,547,751

Customer Number

22850

No. of add'l copies @ .30 per page

Tel. (703) 413-3000
Fax. (703) 413-2220
(OSMMN 03/06)

I:\ATTY\ET\284983US\284983US 1050 3-7-08.DOC

PTO/SB/27 (09-04)
Approved for use through 07/31/2006. OMB 0651-0031
U.S. Patent and Trademark Office; U.S. DEPARTMENT OF COMMERCE
Under the Paperwork Reduction Act of 1995, no persons are required to respond to a collection of information unless it displays a valid OMB control number.

REQUEST FOR EXPEDITED EXAMINATION OF A DESIGN APPLICATION (37 CFR 1.155)

Application Number	TBA
Filing Date	March 29, 2006
First Named Inventor	Glenn Geisendorfer
Title	Basketball with a Circumferential Stripe
Atty Docket Number	015127.00714

T13000 U.S. PTO
29/257038
032906

ADDRESS TO:
MAIL STOP EXPEDITED DESIGN
COMMISSIONER FOR PATENTS
P.O. Box 1450
Alexandria, VA 22313-1450

Approved 4-6-06
Jacqueline M. Stone
Jacqueline M. Stone, Director
Technology Center 1700

This is a request for expedited examination of a design application under 37 CFR 1.155.

NOTE: If the Request made by this form accompanies original application papers, include form PTO/SB/18 "Design Patent Application Transmittal" or its equivalent.

A preexamination search was conducted. The field of search was:

473/447, 596, 597, 598, 599, 604
273/317.3
156/170, 186
D21/707, 708, 709, 710, 711, 712, 713, 714
Keyword Search in USPTO EAST database using term "basketball"

Related applications: 015127.00713

If not previously filed for the above-identified application, the following items required by 37 CFR 1.155 are enclosed:
Formal drawings (see 37 CFR 1.84).
The fee set forth in 37 CFR 1.17(k).
An information disclosure statement in compliance with 37 CFR 1.98.

Signature — March 29, 2006 Date

H. Wayne Porter — Typed or printed name
42,084 — Registration Number, if applicable

(202) 824-3000 — Telephone Number

03/31/2006 MWOLDGE1 00000015 190733 29257038
04 FC:1802 900.00 DA

WARNING: Information on this form may become public. Credit card information should not be included on this form. Provide credit card information and authorization on PTO-2038.

This collection of information is required by 37 CFR 1.155. The information is required to obtain or retain a benefit by the public which is to file (and by the USPTO to process) an application. Confidentiality is governed by 35 U.S.C. 122 and 37 CFR 1.11 and 1.14. This collection is estimated to take 6 minutes to complete, including gathering, preparing, and submitting the completed application form to the USPTO. Time will vary depending upon the individual case. Any comments on the amount of time you require to complete this form and/or

PTO/SB/27 (05-03)
Approved for use through 04/30/2003. OMB 0651-0031
U.S. Patent and Trademark Office; U.S. DEPARTMENT OF COMMERCE
Under the Paperwork Reduction Act of 1995, no persons are required to respond to a collection of information unless it displays a valid OMB control number.

REQUEST FOR EXPEDITED EXAMINATION OF A DESIGN APPLICATION (37 CFR 1.155)

Application Number	TO BE ASSIGNED
Filing Date	March 30, 2006
First Named Inventor	Tracy L. Teague
Title	Portion Of A Shoe Upper
Atty Docket Number	015127.00671

13006 U.S. PTO
29/257135
033006

HAND DELIVER TO THE DESIGN GROUP DIRECTOR'S OFFICE
-or- ADDRESS TO:
MAIL STOP EXPEDITED DESIGN
COMMISSIONER FOR PATENTS
P.O. Box 1450
Alexandria, VA 22313-1450

This is a request for expedited examination of a design application under 37 CFR 1.155.

NOTE: If the Request made by this form accompanies original application papers, include form PTO/SB/18 "Design Patent Application Transmittal" or its equivalent.

A preexamination search was conducted. The field of search was:

Class D2/896, 902, 907, 908, 943, 944, 945, 946, 969, 972, 973, 974 and 977

Related applications: _____

If not previously filed for the above-identified application, the following items required by 37 CFR 1.155 are enclosed:

Formal drawings (see 37 CFR 1.84).

The fee set forth in 37 CFR 1.17(k).

An information disclosure statement in compliance with 37 CFR 1.98.

Approved 4-11-06
Jacqueline M. Stone
Jacqueline M. Stone, Director
Technology Center 1700

March 30, 2006
Date

Signature

202-824-3000
Telephone Number

David R. Gerk-Registration No. 56,901
Typed or printed name

WARNING: Information on this form may become public. Credit card information should not be included on this form. Provide credit card information and authorization on PTO-2038.

This collection of information is required by 37 CFR 1.155. The information is required to obtain or retain a benefit by the public which is to file (and by the USPTO to process) an application. Confidentiality is governed by 35 U.S.C. 122 and 37 CFR 1.14. This collection is estimated to take 6 minutes to complete, including gathering, preparing, and submitting the completed application form to the USPTO. Time will vary depending upon the individual case. Any comments on the amount of time you require to complete this form and/or suggestions for reducing this burden, should be sent to the Chief Information Officer, U.S. Patent and Trademark Office, U.S. Department of Commerce, P.O. Box 1450, Alexandria, VA 22313-1450. DO NOT SEND FEES OR COMPLETED FORMS TO THIS ADDRESS. SEND TO: Mail Stop Expedited Design, Commissioner for Patents, P.O. Box 1450, Alexandria, VA 22313-1450.

If you need assistance in completing the form, call 1-800-PTO-9199 and select option 2.

03/31/2006 HTECKLU1 00000042 190733 29257135
01 FC:1802 900.00 DA

UNITED STATES PATENT AND TRADEMARK OFFICE

Commissioner for Patents
United States Patent and Trademark Office
P.O. Box 1450
Alexandria, VA 22313-1450
www.uspto.gov

HOGAN & HARTSON L.L.P.
1999 AVENUE OF THE STARS
SUITE 1400
LOS ANGELES CA 90067

COPY MAILED

AUG 0 1 2008

OFFICE OF PETITIONS

In re Patent No. D,551,653 :
Issue Date: September 25, 2007 :
Application No. 29/257,146 : ON PETITION
Filed: March 28, 2006 :
Attorney Docket No. 81850.0101 :

This is a decision on the petition filed November 1, 2007, which is being treated as a petition under 37 CFR 3.81(b) to correct the name of the assignee on the front page of the above-identified patent by way of a certificate of correction.

The petition is **DISMISSED**.

Petitioner requests issuance of a certificate of correction in the name of "**OLYMPUS IMAGING CORP.**"

37 CFR 3.81(b), effective June 25, 2004, reads:

> *After payment of the issue fee:* Any request for issuance of an application in the name of the assignee submitted after the date of payment of the issue fee, and any request for a patent to be corrected to state the name of the assignee, must state that the assignment was submitted for recordation as set forth in § 3.11 **before issuance of the patent**, and must include a request for a certificate of correction under § 1.323 of this chapter (accompanied by the fee set forth in § 1.20(a) and the processing fee set forth in § 1.17(i) of this chapter [emphasis added]. *See also* MPEP 1481.01.

U.S. Patent and Trademark Office assignment records disclose that an assignment from Takeshi Nohara to **Olympus Corporation** was recorded on June 30, 2006, prior to issuance of the above application. Accordingly, since an assignment was not submitted for recordation of **Olympus**

Imaging Corp. before issuance of the above application, issuance of a certificate of correction would not be proper.

Telephone inquiries concerning this decision on petition should be directed to the undersigned at (571) 272-3208.

Karen Creasy

Karen Creasy
Petitions Examiner
Office of Petitions

UNITED STATES PATENT AND TRADEMARK OFFICE

COMMISSIONER FOR PATENTS
UNITED STATES PATENT AND TRADEMARK OFFICE
P.O. BOX 1450
ALEXANDRIA, VA 22313-1450
www.uspto.gov
DIW Aug-06

YOUNG LAW FIRM, P.C.
ALAN W. YOUNG
4370 ALPINE ROAD
SUITE 106
PORTOLA VALLEY CA 94028

COPY MAILED
AUG 0 7 2006
OFFICE OF PETITIONS

In re Application of	:	
Linard et al.	:	
Application No. 29/257,180	:	DECISION DISMISSING PETITION
Filed: 29 March, 2006	:	AS MOOT
Atty Dckt No. CYBS6005D	:	

This is a decision on the "Petition for Corrected Filing Date Under 37 C.F.R. §1.10," filed on 10 April, 2006, which is treated as a petition under 37 CFR 1.10(c) requesting that the above-identified application be accorded a filing date of 29 March, 2006.

A review of the Office PALM records reveals that this application has been accorded a filing date of 29 March, 2006.

As the application has been accorded a filing date of 29 March, 2006, the present petition is unnecessary and will be dismissed as involving a moot issue.

No petition fee is due.

Telephone inquiries specific to this matter should be directed to the undersigned at (571) 272-3231.

D Wood

Douglas I. Wood
Senior Petitions Attorney
Office of Petitions

UNITED STATES PATENT AND TRADEMARK OFFICE

COMMISSIONER FOR PATENTS
UNITED STATES PATENT AND TRADEMARK OFFICE
P.O. BOX 1450
ALEXANDRIA, VA 22313-1450
www.uspto.gov

HOWISON & ARNOTT, L.L.P
P.O. BOX 741715
DALLAS TX 75374-1715

COPY MAILED

AUG 05 2008

In re Application of :
Ross, et al. :
Application No. 29/257,183 :
Filed: March 30, 2006 :
Attorney Docket No. ROCH-27,585 :

NOTICE

This is a notice regarding your request for acceptance of a fee deficiency submission under 37 CFR 1.28.

The Office no longer investigates or rejects original or reissue applications under 37 CFR 1.56. **1098 Off. Gaz. Pat. Office 502 (January 3, 1989)**. Therefore, nothing in this Notice is intended to imply that an investigation was done.

Your fee deficiency submission under 37 CFR 1.28 is hereby **ACCEPTED**.

This application is no longer entitled to small entity status. Accordingly, all future fees paid in this application must be paid at the large entity rate.

Inquiries related to this communication should be directed to the undersigned at (571) 272-3205.

Alesia M. Brown
Petitions Attorney
Office of Petitions

PTO/SB/27 (05-03)
Approved for use through 04/30/2003. OMB 0651-0031
U.S. Patent and Trademark Office; U.S. DEPARTMENT OF COMMERCE
Under the Paperwork Reduction Act of 1995, no persons are required to respond to a collection of information unless it displays a valid OMB control number.

OIPE IAP80 JUL 13 2006 PATENT & TRADEMARK OFFICE

REQUEST FOR EXPEDITED EXAMINATION OF A DESIGN APPLICATION (37 CFR 1.155)

Application Number	29/257206
Filing Date	March 31, 2006
First Named Inventor	Eric P. Avar
Title	Portion Of A Shoe Upper
Atty Docket Number	006952.00007

HAND DELIVER TO THE DESIGN GROUP DIRECTOR'S OFFICE
-or- ADDRESS TO:
MAIL STOP EXPEDITED DESIGN
COMMISSIONER FOR PATENTS
P.O. Box 1450
Alexandria, VA 22313-1450

This is a request for expedited examination of a design application under 37 CFR 1.155.

NOTE: If the Request made by this form accompanies original application papers, include form PTO/SB/18 "Design Patent Application Transmittal" or its equivalent.

A preexamination search was conducted. The field of search was:

D2/ 896, 902, 907, 908, 935, 943, 944, 945, 946, 969, 972, 973 and 974

36/45, 50.1, 53, 57, 83, 84, 102, 114, 126, 128 and 129

12-14-06
Approved Jacqueline M. Stone
Jacqueline M. Stone, Director
Technology Center 1700/2900

Related applications: Atty. Dkt. Nos. 006952.00008 (29/257,207)

If not previously filed for the above-identified application, the following items required by 37 CFR 1.155 are enclosed:

Formal drawings (see 37 CFR 1.84).

The fee set forth in 37 CFR 1.17(k).

An information disclosure statement in compliance with 37 CFR 1.98.

07/14/2006 JADDO1 00000003 198733 29257206
05 FC:1802 900.00 DA

July 13, 2006
Date

Signature

202-824-3000
Telephone Number

Darrell G. Mottley, Reg. No. 42,912
Typed or printed name

WARNING: Information on this form may become public. Credit card information should not be included on this form. Provide credit card information and authorization on PTO-2038.

This collection of information is required by 37 CFR 1.155. The information is required to obtain or retain a benefit by the public which is to file (and by the USPTO to process) an application. Confidentiality is governed by 35 U.S.C. 122 and 37 CFR 1.14. This collection is estimated to take 6 minutes to complete, including gathering, preparing, and submitting the completed application form to the USPTO. Time will vary depending upon the individual case. Any comments on the amount of time you require to complete this form and/or suggestions for reducing this burden, should be sent to the Chief Information Officer, U.S. Patent and Trademark Office, U.S. Department of Commerce, P.O. Box 1450, Alexandria, VA 22313-1450. DO NOT SEND FEES OR COMPLETED FORMS TO THIS ADDRESS. SEND TO: Mail Stop Expedited Design, Commissioner for Patents, P.O. Box 1450, Alexandria, VA 22313-1450.

If you need assistance in completing the form, call 1-800-PTO-9199 and select option 2.

PTO/SB/27 (05-03)
Approved for use through 04/30/2003. OMB 0651-0031
U.S. Patent and Trademark Office; U.S. DEPARTMENT OF COMMERCE
Under the Paperwork Reduction Act of 1995, no persons are required to respond to a collection of information unless it displays a valid OMB control number.

REQUEST FOR EXPEDITED EXAMINATION OF A DESIGN APPLICATION (37 CFR 1.155)

Application Number	29/257,207
Filing Date	March 31, 2006
First Named Inventor	Eric P. Avar
Title	Lateral Side Portion Of A Shoe Upper
Atty Docket Number	006952.00008

OIPE IAP90
JUL 13 2006
PATENT & TRADEMARK OFFICE

HAND DELIVER TO THE DESIGN GROUP DIRECTOR'S OFFICE
-or- ADDRESS TO:
MAIL STOP EXPEDITED DESIGN
COMMISSIONER FOR PATENTS
P.O. Box 1450
Alexandria, VA 22313-1450

This is a request for expedited examination of a design application under 37 CFR 1.155.

NOTE: If the Request made by this form accompanies original application papers, include form PTO/SB/18 "Design Patent Application Transmittal" or its equivalent.

A preexamination search was conducted. The field of search was:

D2/ 896, 902, 907, 908, 935, 943, 944, 945, 946, 969, 972, 973 and 974

36/45, 50.1, 53, 57, 83, 84, 102, 114, 126, 128 and 129

Related applications: Atty. Dkt. No. 006952.00007 (29/257,206)

If not previously filed for the above-identified application, the following items required by 37 CFR 1.155 are enclosed:

Formal drawings (see 37 CFR 1.84).

The fee set forth in 37 CFR 1.17(k).

An information disclosure statement in compliance with 37 CFR 1.98.

12-14-06
Approved
Jacqueline M. Stone
Jacqueline M. Stone, Director
Technology Center 1700/2900

July 13, 2006
Date

Signature

202-824-3000
Telephone Number

Darrell G. Mottley, Reg. No. 42,912
Typed or printed name

WARNING: Information on this form may become public. Credit card information should not be included on this form. Provide credit card information and authorization on PTO-2038.

07/14/2006 IADDO1 00000002 198733 29257207
05 FC:1802 900.00 DA

This collection of information is required by 37 CFR 1.155. The information is required to obtain or retain a benefit by the public which is to file (and by the USPTO to process) an application. Confidentiality is governed by 35 U.S.C. 122 and 37 CFR 1.14. This collection is estimated to take 6 minutes to complete, including gathering, preparing, and submitting the completed application form to the USPTO. Time will vary depending upon the individual case. Any comments on the amount of time you require to complete this form and/or suggestions for reducing this burden, should be sent to the Chief Information Officer, U.S. Patent and Trademark Office, U.S. Department of Commerce, P.O. Box 1450, Alexandria, VA 22313-1450. DO NOT SEND FEES OR COMPLETED FORMS TO THIS ADDRESS. SEND TO: Mail Stop Expedited Design, Commissioner for Patents, P.O. Box 1450, Alexandria, VA 22313-1450.

If you need assistance in completing the form, call 1-800-PTO-9199 and select option 2.

UNITED STATES PATENT AND TRADEMARK OFFICE

COMMISSIONER FOR PATENTS
UNITED STATES PATENT AND TRADEMARK OFFICE
P.O. BOX 1450
ALEXANDRIA, VA 22313-1450
www.uspto.gov

Paper No.

BRUCE H. TROXELL
SUITE 1404
5205 LEESBURG PIKE
FALLS CHURCH VA 22041

COPY MAILED
JAN 06 2009
OFFICE OF PETITIONS

In re Application of	:	
Chiao-Ming Wang	:	DECISION ON
Application No. 29/257,217	:	PETITION
Filed: March 31, 2006	:	
Atty Docket No. BHT-3204-141	:	

This is a decision on the PETITION FOR REVIVAL OF AN APPLICATION FOR PATENT ABANDONED UNINTENTIONALLY UNDER 37 CFR 1.137(b), filed August 15, 2008.

The petition is **DISMISSED**.

Any request for reconsideration of this decision must be submitted within **TWO (2) MONTHS** from the mail date of this decision. Extensions of time under 37 C.F.R. § 1.136(a) are permitted. The reconsideration request should include a cover letter entitled "Renewed Petition under 37 C.F.R. § 1.137(b)."

The above-identified application became abandoned for failure to timely pay the required issue fee within the statutory period of three months from the mailing date, September 26, 2006, of the Notice of Allowance and Issue Fee due. This Office action set a three-month nonextendable statutory period for reply. The issue fee transmittal was timely filed on December 22, 2006. However, when presented, the Deposit Account did not have sufficient funds to pay the issue fee. No issue fee received, the above-identified application became abandoned on December 27, 2006. A courtesy Notice of Abandonment was mailed on May 31, 2007.

The provisions of 37 C.F.R. § 1.137(b) provide that where the delay in reply was unintentional, a petition may be filed to

revive an abandoned application or a lapsed patent. A petition filed pursuant to 37 C.F.R. §1.137(b) must be accompanied by:

(1) The reply required to the outstanding Office action or notice, unless previously filed;

(2) The petition fee as set forth in § 1.17(m);

(3) A statement that the entire delay in filing the required reply from the due date for the reply until the filing of a grantable petition pursuant to this paragraph was unintentional. The Director may require additional information where there is a question whether the delay was unintentional; and

(4) Any terminal disclaimer (and fee as set forth in § 1.20(d)) required pursuant to paragraph (d) of this section.

The petition includes the required reply in the form of payment of the issue fee[1]; payment of the petition fee; and the required statement of unintentional delay.

However, the instant petition does not satisfy requirement (4) above. No terminal disclaimer and fee were submitted with the instant petition. A properly completed terminal disclaimer and terminal disclaimer fee are required for revival of this design application. Only utility and plant applications filed on or after June 8, 1995 do not require terminal disclaimers per se for revival.

Further correspondence with respect to this matter should be addressed as follows:

By mail: Mail Stop Petition
Commissioner for Patents
P.O. Box 1450
Alexandria, VA 22313-1450

By fax: (571) 273-8300
ATTN: Office of Petitions

[1] There was no distinct but concurrent requirement for corrected drawings.

By hand: Customer Service Window
Randolph Building
401 Dulany Street
Alexandria, VA 22314

Telephone inquiries specific to this matter should be directed to the undersigned at (571) 272-3219.

Nancy Johnson
Senior Petitions Attorney
Office of Petitions

UNITED STATES PATENT AND TRADEMARK OFFICE

COMMISSIONER FOR PATENTS
UNITED STATES PATENT AND TRADEMARK OFFICE
P.O. BOX 1450
ALEXANDRIA, VA 22313-1450
www.uspto.gov

Paper No.

BRUCE H. TROXELL
SUITE 1404
5205 LEESBURG PIKE
FALLS CHURCH VA 22041

COPY MAILED
FEB 17 2009
OFFICE OF PETITIONS

In re Application of	:	
Chiao-Ming Wang	:	DECISION ON
Application No. 29/257,217	:	PETITION
Filed: March 31, 2006	:	
Atty Docket No. BHT-3204-141	:	

This is a decision on the RENEWED PETITION UNDER 37 CFR 1.137(b), filed January 22, 2009.

The petition is **GRANTED**.

The above-identified application became abandoned effective December 27, 2006 for failure to timely pay the required issue fee within the statutory period of three months from the mailing date, September 26, 2006, of the Notice of Allowance and Issue Fee due. A fee was timely submitted; however, when presented, the Deposit Account did not have sufficient funds to pay the issue fee.

By decision mailed January 6, 2009, the initial petition filed August 15, 2008 was dismissed. The petition included the required reply in the form of payment of the issue fee[1]; payment of the petition fee; and the required statement of unintentional delay. However, the petition did not include the terminal disclaimer (and terminal disclaimer fee) required to revive this design application.

On instant petition, applicants have provided the proper terminal disclaimer and disclaimer fee. The terminal disclaimer has been approved for revival of the application. Applicants have now met all requirements of 37 CFR 1.137(b).

[1] There was no distinct but concurrent requirement for corrected drawings.

The instant application has been abandoned for an extended period of time. The Office is relying on petitioner's duty of good faith and candor in accepting the assertion that the entire delay in filing the required reply was unintentional. See 37 CFR 10.18.

The Office of Data Management has been advised of this decision. The application is, thereby, forwarded for processing into a patent.

Telephone inquiries specific to this matter should be directed to the undersigned at (571) 272-3219.

Nancy Johnson
Senior Petitions Attorney
Office of Petitions

UNITED STATES PATENT AND TRADEMARK OFFICE

Commissioner for Patents
United States Patent and Trademark Office
P.O. Box 1450
Alexandria, VA 22313-1450
www.uspto.gov

WILLIAM G SYKES ESQUIRE
3669 SEAGULL BLUFF DRIVE
VIRGINIA BEACH VA 23455

COPY MAILED

SEP 28 2007

OFFICE OF PETITIONS

In re Application of		
Christopher M. Qualtieri	:	
Application No. 29/257,230	:	DECISION ON
Filed: April 3, 2006	:	PETITION
Attorney Docket No. 50704	:	

This is in response to the petition to withdraw the holding of abandonment under 37 CFR 1.181, filed August 27, 2007.

The petition under 37 CFR 1.181 is **DISMISSED**.

Any request for reconsideration of this decision must be submitted within **TWO (2) MONTHS** from the mail date of this decision. The reconsideration request should include a cover letter entitled "Renewed Petition under 37 CFR 1.181". Extensions of time under 37 CFR 1.136(a) are permitted.

The above-identified application became abandoned for failure to timely file a reply to the Notice of Allowance mailed February 7, 2007. This Office action set a statutory period for reply of three (3) months. No issue fee having been received, the above-identified application became abandoned on May 8, 2007. The mailing of this decision precedes the mailing of a Notice of Abandonment.

A review of the Notice of Allowance mailed February 7, 2007 reveals that it was properly mailed to the correspondence address of record at that time. With the filing of the application papers on April 3, 2006, on both the transmittal letter and declaration, applicant directed that correspondence be addressed to customer number 50704. Petitioner has not submitted evidence showing that he timely filed a change of correspondence address with the Office. A review of the record reveals that applicant filed a change of correspondence address on June 5, 2007, after the mailing of the Notice of Allowance.

While the showing of record is not sufficient to establish to the satisfaction of the Commissioner that the delay was unavoidable, petitioner is not precluded from obtaining relief by filing a request for reconsideration pursuant to 37 CFR 1.137(b) on the basis of unintentional delay. A grantable petition pursuant to 37 CFR 1.137(b) must be accompanied by (1) The reply required to the outstanding Office action or notice, unless previously filed; (2) The petition fee as set forth in 37 CFR 1.17(m); (3) A statement that the entire delay in filing the required reply from the due date for the reply until the filing of a grantable petition pursuant to this paragraph was unintentional. The Commissioner may require additional information where there is a question whether the delay was unintentional; and (4) Any terminal disclaimer (and fee as set forth in 37 CFR 1.20(d)) required pursuant to paragraph (d) of this section.

Further correspondence with respect to this matter should be addressed as follows:

By mail: Mail Stop Petitions
Commissioner for Patents
P.O. Box 1450
Alexandria VA 22313-1450

By FAX: (571)273-8300
Attn: Office of Petitions

Telephone inquiries related to this decision should be directed to the undersigned at 571-272-3207.

Cliff Congo
Petitions Attorney
Office of Petitions

UNITED STATES PATENT AND TRADEMARK OFFICE

Commissioner for Patents
United States Patent and Trademark Office
P.O. Box 1450
Alexandria, VA 22313-1450
www.uspto.gov

WILLIAMS G. SYKES
3669 SEAGULL BLUFF DRIVE
VIRGINIA BEACH, VA 23455

COPY MAILED

NOV 2 6 2008

OFFICE OF PETITIONS

In re Application of
Christopher M. Qualtieri
Application No. 29/257,230
Filed: April 3, 2006
Attorney Docket No. 50704

ON PETITION

This is a decision on the petition under 37 CFR 1.137(b), filed September 2, 2008, to revive the above-identified design application.

The petition is **GRANTED**.

This application became abandoned for failure to timely pay the issue fees and to submit corrected formal drawings on or before May 7, 2007, as required by the Notice of Allowance and Fee(s) Due and the Notice of Allowability, mailed February 7, 2007. A Notice of Abandonment was mailed on October 18, 2007. On September 2, 2008, the present petition was filed.

The petition satisfies the requirements of 37 CFR 1.137(b) in that petitioner has supplied (1) the reply in the form of the $410 issue fee, (2) the petition fee of $770, (3) an adequate statement of unintentional delay, and (4) a terminal disclaimer and fee as required by 37 CFR 1.137(d).

The terminal disclaimer filed September 2, 2008 is accepted and has been made of record. Any continuing application filed from this application must contain a copy of the terminal disclaimer. The copy of the terminal disclaimer must be filed with a cover letter requesting the terminal disclaimer be recorded on the continuing application. A copy of this decision should be attached to the cover letter.

The application is being referred to the Office of Data Management to be processed into a patent.

Telephone inquires related to this decision should be directed to the undersigned at (571) 272-3204. Telephone inquiries related to processing as a patent should be directed to (571) 272-4200.

Sherry D. Brinkley
Petitions Examiner
Office of Petitions

UNITED STATES PATENT AND TRADEMARK OFFICE

Commissioner for Patents
United States Patent and Trademark Office
P.O. Box 1450
Alexandria, VA 22313-1450
www.uspto.gov

TIMOTHY M. BARLOW
CMR 480 BOX 0007
APO AE 09128

COPY MAILED

MAR 07 2008

OFFICE OF PETITIONS

In re Application of	:	
Hahin, Robert G.	:	
Application No. 29/257,336	:	DECISION ON PETITION
Filed: April 3, 2006	:	
Attorney Docket No. HAH-0601DPA	:	

This is a decision on the petition under the unintentional provisions of 37 CFR 1.137(b), filed January 25, 2008, to revive the above-identified application.

The petition is **GRANTED**.

The petition satisfies the requirements of 37 CFR 1.137(b) in that petitioner has supplied (1) the reply in the form of Replacement Drawings, (2) the petition fee, (3) a proper statement of unintentional delay and (4) a terminal disclaimer and fee.

Telephone inquiries concerning this decision should be directed to the undersigned at (571) 272-3206.

This matter is being referred to the Office of Data Management for processing into a patent.

Liana Walsh
Petitions Examiner
Office of Petitions

UNITED STATES PATENT AND TRADEMARK OFFICE

Commissioner for Patents
United States Patent and Trademark Office
P.O. Box 1450
Alexandria, VA 22313-1450
www.uspto.gov

COPY MAILED

AUG 2 3 2007

OFFICE OF PETITIONS

NIXON & VANDERHYE, PC
901 NORTH GLEBE ROAD, 11TH FLOOR
ARLINGTON, VA 22203

In re Application of

SENKO, Perry et al.
Application No. 29/257,357
Filed: March 29, 2006
Attorney Docket No. **3343-43**

DECISION ON PETITION
TO WITHDRAW
FROM RECORD

This is a decision on the Request to Withdraw as attorney or agent of record under 37 C.F.R. § 1.36(b), filed July 10, 2007.

The request is **NOT APPROVED** as moot.

A review of the file record indicates that the power of attorney to Davis & Bujold, P.L.L.C. has been revoked by the applicant of the patent application on July 10, 2007. Accordingly, the request to withdraw under 37 C.F.R. § 1.36(b) is moot.

All future communications from the Office will continue to be directed to the below-listed address until otherwise notified by applicant.

Telephone inquires concerning this decision should be directed to Michelle R. Eason at 571-272-4231.

T. Williams
TerriWilliams
Petitions Examiner
Office of Petitions

cc: **DAVIS & BUJOLD, P.L.L.C**
112 PLEASANT STREET
CONCORD, NH 03301

UNITED STATES PATENT AND TRADEMARK OFFICE

Commissioner for Patents
United States Patent and Trademark Office
P.O. Box 1450
Alexandria, VA 22313-1450
www.uspto.gov

GALLAGHER & DAWSEY CO., L.P.A.
P.O. BOX 785
COLUMBUS, OH 43216

COPY MAILED

DEC 14 2007

OFFICE OF PETITIONS

In re Application of :
David J. STEIN :
Application No. 29/257,373 : DECISION ON PETITION
Filed: April 3, 2006 :
Attorney Docket No. 060322.001 :

This is a decision on the petition under the unintentional provisions of 37 CFR 1.137(b), filed July 2, 2007, to revive the above-identified design application.

The petition is **GRANTED**.

The application became abandoned for failure to submit formal drawings in a timely manner in reply to the Notice of Allowability, mailed February 9, 2007, which set a period for reply of three (3) months. Accordingly, this application became abandoned on June 10, 2007.

The petition satisfies the requirements of 37 CFR 1.137(b) in that petitioner has supplied (1) the reply in the form of an amendment with replacement drawings, (2) the petition fee of $750, (3) a terminal disclaimer (and fee as set forth in 37 CFR 1.20 (d)) required by 37CFR 1.137(d) and (4) an adequate statement of unintentional delay.

The terminal disclaimer is accepted and has been made of record.

Telephone inquiries concerning this decision should be directed to Diane Goodwyn at (571)272-6735.

This application is being referred to the Office of Data Management.

April Wise
Petitions Examiner
Office of Petitions

UNITED STATES PATENT AND TRADEMARK OFFICE

COMMISSIONER FOR PATENTS
UNITED STATES PATENT AND TRADEMARK OFFICE
P.O. BOX 1450
ALEXANDRIA, VA 22313-1450
www.uspto.gov

COPY MAILED

DEC 27 2007

OFFICE OF PETITIONS

EDWARDS ANGELL PALMER & DODGE LLP
P.O. BOX 55874
BOSTON, MA 02205

In re Application of
Jakob Weldngh, et al.
Application No. 29/257,425
Filed: April 4, 2006
Attorney Docket No. 65313(53730)

ON PETITION

This is a decision on the petition, filed August 31, 2007, to revive the above-identified application under the provisions of 37 CFR 1.137(b).

The petition is **GRANTED**.

The above-identified application became abandoned for failure to respond in a timely manner to the Notice of Allowability mailed March 15, 2007. A Notice of Abandonment was mailed on August 27, 2007. In response, on August 31, 2007, the present petition was filed.

The petition satisfies the conditions for revival pursuant to the provisions of 37 CFR 1.137(b) in that petitioner has supplied (1) the reply in the form of corrected drawings; (2) the petition fee of $1,500; (3) an adequate statement of unintentional delay; and (4) a terminal disclaimer and the $130 fee required by 37 CFR 1.137(d).

The terminal disclaimer is accepted and has been made of record. Any continuing application filed from this application must contain a copy of the terminal disclaimer. The copy of the terminal disclaimer must be filed with a cover letter requesting the terminal disclaimer be recorded on the continuing application. A copy of this decision should be attached to the cover letter.

The application is being referred to the Office of Publications to oversee the review of the drawings filed August 31, 2007.

Telephone inquires related to this decision may be directed to the undersigned at (571) 272-3204. Status inquires related to processing at Publishing Division should be directed to (571) 272-4200.

Sherry D. Brinkley
Petitions Examiner
Office of Petitions

UNITED STATES PATENT AND TRADEMARK OFFICE

COMMISSIONER FOR PATENTS
UNITED STATES PATENT AND TRADEMARK OFFICE
P.O. BOX 1450
ALEXANDRIA, VA 22313-1450
www.uspto.gov

EDWARDS ANGELL PALMER & DODGE LLP
P.O. BOX 55874
BOSTON, MA 02205

COPY MAILED

DEC 27 2007

OFFICE OF PETITIONS

In re Application of
Jakob Weldngh, et al.
Application No. 29/257,426
Filed: April 4, 2006
Attorney Docket No. 65313(53730)

ON PETITION

This is a decision on the petition, filed August 31, 2007, to revive the above-identified application under the provisions of 37 CFR 1.137(b).

The petition is **GRANTED**.

The above-identified application became abandoned for failure to respond in a timely manner to the Notice of Allowability mailed February 21, 2007. A Notice of Abandonment was mailed on August 28, 2007. In response, on August 31, 2007, the present petition was filed.

The petition satisfies the conditions for revival pursuant to the provisions of 37 CFR 1.137(b) in that petitioner has supplied (1) the reply in the form of corrected drawings; (2) the petition fee of $1,500; (3) an adequate statement of unintentional delay; and (4) a terminal disclaimer and the $130 fee required by 37 CFR 1.137(d).

The terminal disclaimer is accepted and has been made of record. Any continuing application filed from this application must contain a copy of the terminal disclaimer. The copy of the terminal disclaimer must be filed with a cover letter requesting the terminal disclaimer be recorded on the continuing application. A copy of this decision should be attached to the cover letter.

The application is being referred to the Office of Publications to oversee the review of the drawings filed August 31, 2007.

Telephone inquires related to this decision may be directed to the undersigned at (571) 272-3204. Status inquires related to processing at Publishing Division should be directed to (571) 272-4200.

Sherry D. Brinkley
Petitions Examiner
Office of Petitions

UNITED STATES PATENT AND TRADEMARK OFFICE

Commissioner for Patents
United States Patent and Trademark Office
P.O. Box 1450
Alexandria, VA 22313-1450
www.uspto.gov

EDWARDS ANGELL PALMER & DODGE LLP
P.O. BOX 55874
BOSTON MA 02205

COPY MAILED
MAR 28 2008
OFFICE OF PETITIONS

In re Application of	:	
Jakob Weldingh et al	:	
Application No. 29/257,440	:	DECISION GRANTING PETITION
Filed: April 4, 2006	:	UNDER 37 CFR 1.137(b)
Attorney Docket No. 65313-2(53730)	:	

This is a decision on the petition under 37 CFR 1.137(b), filed August 31, 2007, to revive the above-identified application. This is also a decision on the petition to expedite under 37 CFR 1.182 filed March 26, 2008.

The petitions are **GRANTED**.

The petition satisfies the conditions for revival pursuant to the provisions of 37 CFR 1.137(b) in that (1) the reply in the form of corrected drawings; (2) the petition fee; and (3) the required statement of unintentional delay have been received. Accordingly, the reply to the Notice of Allowance/Notice of Allowability mailed March 15, 2007, is accepted as having been unintentionally delayed.

Telephone inquiries concerning this decision should be directed to the undersigned at (571) 272-3208.

This matter is being referred to the Office of Data Management and for review of the drawings submitted on August 31, 2007.

Karen Creasy

Karen Creasy
Petitions Examiner
Office of Petitions

SPE: C. Brooks

SPE RESPONSE FOR CERTIFICATE OF CORRECTION

Paper No.: _____

DATE : 6/12/07

TO SPE OF : ART UNIT 2911

SUBJECT : Request for Certificate of Correction for Appl. No.: 29/252,506 Patent No.: D541705

Please respond to this request for a certificate of correction within 7 days.

Please review the requested changes/corrections as shown in the **COCIN** document(s) in the IFW application image. No new matter should be introduced, nor should the scope or meaning of the claims be changed.

Please complete the response (see below) and forward the completed response to scanning using document code **COCX**.

Lamonte M. Newsome
Certificates of Correction Branch
703-308-9390 ext. 112

Thank You For Your Assistance

The request for issuing the above-identified correction(s) is hereby:
Note your decision on the appropriate box.

- ☐ **Approved** — All changes apply.
- ☐ **Approved in Part** — Specify below which changes **do not** apply.
- ☑ **Denied** — State the reasons for denial below.

Comments: The addition of the foreign priority data to the claim is denied because the certified copy of the foreign priority document was not submitted. The requirements of 35 USC 119(a)-(d) or(f) and 37 CFR 1.55(a) must be met for the claim to be perfected.

Cathron C. Brooks — SPE — 2911 Art Unit

CATHRON C. BROOKS
PRIMARY EXAMINER

UNITED STATES PATENT AND TRADEMARK OFFICE

Commissioner for Patents
United States Patent and Trademark Office
P.O. Box 1450
Alexandria, VA 22313-1450
www.uspto.gov

Date Mailed : 07/07/07

Patent No. : D541705 S
Patent Issued : 05/01/07
Docket No. : **047976.00064**

Re: Request for Certificate of Correction

Consideration has been given your request for the issuance of a certificate of correction for the above-identified patent under the provisions of Rule(s) 1.322.

Respecting the alleged errors in the documents filed on 05/17/07; please see attachment. **"Therefore, no correction(s) is in order here under United States Codes (U.S.C.) 254 and the Code of Federal Regulation (C.F.R.) 1322."**

In view of the foregoing, your request in this matter is hereby denied.

Lamonte M. Newsome
For Cecelia Newman, Supervisor
Decisions & Certificates
Of Correction Branch
(703) 305-8309 or (703)-308-9390 #112

HOLLAND & KNIGHT LLP
ATTN: STEFAN V. STEIN/ IP DEPT.
POST OFFICE BOX 1288
TAMPA FL 33601-1288

LMN

SPE: C. Brooks

SPE RESPONSE FOR CERTIFICATE OF CORRECTION

Paper No.: _____

DATE : 6/12/07

TO SPE OF : ART UNIT 2911

SUBJECT : Request for Certificate of Correction for Appl. No.: 29/252,506 Patent No.: D541705

Please respond to this request for a certificate of correction within 7 days.

Please review the requested changes/corrections as shown in the COCIN document(s) in the IFW application image. No new matter should be introduced, nor should the scope or meaning of the claims be changed.

Please complete the response (see below) and forward the completed response to scanning using document code COCX.

Lamonte M. Newsome
Certificates of Correction Branch
703-308-9390 ext. 112

Thank You For Your Assistance

The request for issuing the above-identified correction(s) is hereby:
Note your decision on the appropriate box.

- ☐ **Approved** — All changes apply.
- ☐ **Approved in Part** — Specify below which changes do not apply.
- ☑ **Denied** — State the reasons for denial below.

Comments: The addition of the foreign priority data to the claim is denied because the certified copy of the foreign priority document was not submitted. The requirements of 35 USC 119(a)-(d) or (f) and 37 CFR 1.55(a) must be met for the claim to be perfected.

[signature] 2911
SPE Art Unit

CATHRON C. BROOKS
PRIMARY EXAMINER

UNITED STATES PATENT AND TRADEMARK OFFICE

Commissioner for Patents
United States Patent and Trademark Office
P.O. Box 1450
Alexandria, VA 22313-1450
www.uspto.gov

COPY MAILED

NOV 16 2007

OFFICE OF PETITIONS

PETER J. THOMA
5048 TENNYSON PARKWAY, SUITE 200
PLANO, TX 75024

In re Application of :
KROTTINGER, Elizabeth J. :
Application No. 29/257,515 : DECISION ON PETITION
Filed: April 5, 2006 :
Attorney Docket No. **509980.000004** :

This is a decision on the petition under the unintentional provisions of 37 CFR 1.137(b), filed July 30, 2007, to revive the above-identified application.

The petition is **GRANTED.**

This application became abandoned for failure to timely pay the issue fee on or before March 22, 2007, as required by the Notice of Allowance and Fee(s) Due mailed, December 22, 2006. Accordingly, the date of abandonment of this application is March 23, 2007.

The petition satisfies the requirements of 37 CFR 1.137(b) in that petitioner has supplied (1) the reply in the form of payment of the issue fee of $400; (2) the petition fee of $750, (3) a proper statement of unintentional delay and (4) a terminal disclaimer and fee as required by 37 CFR 1.137(b).

The terminal disclaimer filed July 30, 2007 has been entered and made of record. Any continuing application filed from this application must contain a copy of the terminal disclaimer. The copy of the terminal disclaimer must be filed with a cover letter requesting the terminal disclaimer be recorded on the continuing application. A copy of this decision should be attached to the cover letter.

Telephone inquiries concerning this decision should be directed to Monica A. Graves at (571) 272-7253.

This application is being referred to Publishing Division for processing into a patent.

Sherry D. Brinkley
Petitions Examiner
Office of Petitions

UNITED STATES PATENT AND TRADEMARK OFFICE

Commissioner for Patents
United States Patent and Trademark Office
P.O. Box 1450
Alexandria, VA 22313-1450
www.uspto.gov

ROBERT H. MURRAY
52 MANOR HILL DR
FAIRPORT NY 14450

COPY MAILED
NOV 01 2006
OFFICE OF PETITIONS

In re Application of	:	
Robert H. Murray	:	
Application No. 29/257,542	:	DECISION ON PETITION
Filed: April 6, 2006	:	TO MAKE SPECIAL UNDER
Attorney Docket No. MSDO 13A	:	37 CFR 1.102(c)(1)
	:	

This is a decision on the petition under 37 CFR 1.102(c)(1), filed April 6, 2006, to make the above-identified application special based on applicant's age as set forth in M.P.E.P. § 708.02, Section IV.

The petition is **GRANTED**.

A grantable petition to make an application special under 37 CFR 1.102(c)(1) and MPEP § 708.02, Section IV: Applicant's Age, must be accompanied by evidence showing that at least one of the applicants is 65 years of age, or more, such as a birth certificate or a statement by applicant. No fee is required.

The instant petition includes a copy of the applicant's drivers license proving that he is 65 years of age or older. Accordingly, the above-identified application has been accorded "special" status.

Telephone inquiries concerning this decision should be directed to Terri Williams at 571-272-2991.

All other inquiries concerning either the examination or status of the application should be directed to the Technology Center.

The application is being forwarded to the Technology Center Art Unit 2912 for action on the merits commensurate with this decision.

David Bucci
Petitions Examiner
Office of Petitions

UNITED STATES PATENT AND TRADEMARK OFFICE

Commissioner for Patents
United States Patent and Trademark Office
P.O. Box 1450
Alexandria, VA 22313-1450
www.uspto.gov

CALFEE HALTER & GRISWOLD, LLP
800 SUPERIOR AVENUE
SUITE 1400
CLEVELAND, OH 44114

COPY MAILED
NOV 29 2006
OFFICE OF PETITIONS

In re Application of	:	
Walsh et al.	:	
Application No. 29/257,608	:	Decision Refusing to Accord
Filed: April 6, 2006	:	Status Under 37 CFR 1.47(a)
Attorney Docket No. 24259/04609	:	
For: Decorative Fixtures and Portables	:	

This is a decision on the petition under 37 CFR 1.47(a), filed August 31, 2006.

The petition is **DISMISSED**.

Any request for reconsideration of this decision must be submitted within TWO (2) MONTHS from the mail date of this decision. Extensions of time under 37 CFR 1.136(a) are permitted. No further petition fee is required for the request. Any response should be entitled "Request for Reconsideration of Petition Under 37 CFR 1.47(a)" and may include an oath or declaration executed by the current non-signing inventor(s). **Failure to respond will result in abandonment of the application.**

A grantable petition under 37 CFR 1.47(a) requires

(1) proof that the non-signing inventor cannot be found or reached after diligent effort or that the inventor refused to sign the declaration after having been presented with the application papers (specification, claims, and drawings),
(2) a proper oath or Declaration executed by the available joint inventor(s),
(3) the fee of $200 as specified in 37 CFR 1.17(g), and
(4) the last known address of the non-signing inventor(s).

The petition fails to satisfy items (1), (2), and (4).

As to item (1), Office policy requires a copy of an application be presented to an inventor in order to establish constructive refusal to sign a declaration. Petitioner must establish the inventors were able to sign the declaration but refused to sign the declaration. An inventor is unable to sign a declaration stating he or she has "reviewed and understands the application papers" when the inventor has not been presented with a copy of the application and therefore has not reviewed the application. In addition, until an inventor reviews the papers and reads the specification and claims, an inventor cannot know if he or she is actually an inventor of the

claimed invention. The petition fails to establish the non-signing inventors were presented with a copy of the application papers.

Petitioner should send a copy of the application to the inventors along with instructions setting a deadline for the return of a signed declaration. The letter to each inventor should state that, if petitioner receives no reply from the inventor, petitioner will interpret the lack of reply as a refusal to sign the declaration. This sort of ultimatum lends support to a finding of refusal by conduct when a response is not received from an inventor. The proof of the pertinent events should be made by a statement of someone with firsthand knowledge of the events and should include documentary evidence, such as a certified mail return receipt, cover letter of instructions, telegram, etc.

As to item (2), the declaration fails to list the citizenship, residential address, or mailing address for Sergio Orozco. A proper supplemental declaration signed by the other inventors (excluding Hayek) should be filed.

As to item (4), the last known mailing address for inventor Hayek is unclear. Belinda Groppi refers to a mailing address different from the address listed on the declaration. Any request for reconsideration should clearly state the last known address for inventor Hayek.

Further correspondence with respect to this matter should be addressed as follows:

By mail: Mail Stop Petition
Commissioner for Patents
P.O. Box 1450
Alexandria, VA 22313-1450

By facsimile: (571) 273-8300
Attn: Office of Petitions

By hand: U.S. Patent and Trademark Office
Customer Service Window
Randolph Building
401 Dulany Street
Alexandria, VA 22314

Telephone inquiries regarding this communication should be directed to Petitions Attorney Steven Brantley at (571) 272-3203.

Charles Steven Brantley
Senior Petitions Attorney
Office of Petitions

UNITED STATES PATENT AND TRADEMARK OFFICE

Commissioner for Patents
United States Patent and Trademark Office
P.O. Box 1450
Alexandria, VA 22313-1450
www.uspto.gov

CALFEE HALTER & GRISWOLD, LLP
800 SUPERIOR AVENUE
SUITE 1400
CLEVELAND, OH 44114

COPY MAILED
APR 13 2007
OFFICE OF PETITIONS

In re Application of	:	
Walsh et al.	:	Decision Noting Joinder of Inventor and
Application No. 29/257,608	:	Decision Dismissing Any Request for
Filed: April 6, 2006	:	Status Under 37 CFR 1.47 as Moot
Attorney Docket No. 24259/04609	:	

Papers filed on December 12, 2006, in response to a Decision refusing to accord status under 37 CFR 1.47(a) mailed on November 29, 2006, include a Declaration signed by the previously non-signing inventor in compliance with 37 CFR 1.63.

In view of the joinder of the inventor, further consideration under Rule 1.47(a) is unnecessary.

Therefore, the petition is **dismissed as moot**.

The Office of Initial Patent Examination will be informed of the instant decision so that it may continue taking steps to prepare the application for examination.

Telephone inquiries regarding this communication should be directed to Petitions Attorney Steven Brantley at (571) 272-3203.

Charles Steven Brantley
Senior Petitions Attorney
Office of Petitions

UNITED STATES PATENT AND TRADEMARK OFFICE

Commissioner for Patents
United States Patent and Trademark Office
P.O. Box 1450
Alexandria, VA 22313-1450
www.uspto.gov

November 20, 2007

Patent No. : D544173 S
Application Number : 29/257644
Patent Issued : Jun. 5, 2007
Title : **WHEELBARROW WITH PIVOTING HOPPER**
Docket No. : 288903-00272-2

Re: Request for Certificate of Correction

Consideration has been given your request for the issuance of a certificate of correction for the above-identified patent under the provisions of Rule 1.323.

Inspection of the patent application file reveals, that the alleged error(s) on title page (item 60), the patent is printed in accordance with the record in the Patent and Trademark Office of the application as passed to issue by the examiner. Therefore, being no fault on the part of the Patent and Trademark Office, is has no authority to issue a certificate of correction under the provisions of 35 U.S.C. 254 and Rule 1.322 of the rules of Practice of the United States Patent and Trademark Office in Patent Cases.

Further correspondence concerning this matter(s) should be filed and directed to Decisions & Certificates of Correction Branch, within a four week period, to afford you an opportunity to state whether or not you object to the proposed change(s).

Elisha Evans
For Cecelia Newman
Decisions & Certificates
of Correction Branch
(703) 308-9390 ext. 110 or (703) 308-8309

David C. Jenkins
Eckert Seamans Cherin & Mellott, LLC
44th Floor
600 Grant Street
Pittsburgh PA 15219

CBN/eme

UNITED STATES PATENT AND TRADEMARK OFFICE

Commissioner for Patents
United States Patent and Trademark Office
P.O. Box 1450
Alexandria, VA 22313-1450
www.uspto.gov

LAURENCE E. STEIN
801 MAJORIE LANE S.E.
VIENNA, VA 22180

COPY MAILED

NOV 16 2007

OFFICE OF PETITIONS

In re Application of
Edward John Mikol
Application No. 29/257,675
Filed: April 10, 2006
Attorney Docket No. 1024.0007

DECISION ON PETITION

This is a decision on the petition under 37 CFR 1.137(b), filed October 3, 2007, to revive the above-identified application.

The petition is **GRANTED**.

This application became abandoned for failure to timely submit corrected drawings on or before July 19, 2007, as required by the Notice of Allowability, mailed April 19, 2007. Accordingly, the date of abandonment of this application is July 20, 2007. A Notice of Abandonment was mailed on September 25, 2007.

The petition satisfies the requirements of 37 CFR 1.137(b) in that petitioner has supplied (1) the reply in the form of corrected drawings, (2) the petition fee of $770, and (3) a proper statement of unintentional delay. Accordingly, the drawings are accepted as being unintentionally delayed.

The terminal disclaimer is accepted and has been made of record. Any continuing application filed from this application must contain a copy of the terminal disclaimer. The copy of the terminal disclaimer must be filed with a cover letter requesting the terminal disclaimer be recorded on the continuing application. A copy of this decision should be attached to the cover letter.

Telephone inquiries concerning this decision should be directed to Kimberly Inabinet at (571) 272-4618.

This application is being referred to Publishing Division for appropriate processing in accordance with this decision on petition.

Frances Hicks
Petitions Examiner
Office of Petitions

UNITED STATES PATENT AND TRADEMARK OFFICE

Commissioner for Patents
United States Patent and Trademark Office
P.O. Box 1450
Alexandria, VA 22313-1450
www.uspto.gov

Laurence E. Stein
801 Marjorie Lane S.E.
Vienna VA 22180

COPY MAILED

MAR 3 1 2008

OFFICE OF PETITIONS

In re Application of :
Mikol :
Application No. 29/257,686 : DECISION ON PETITION
Filed: April 10, 2006 :
Attorney Docket No. 1024.0010 :

This is a decision on the petition under 37 CFR 1.137(b), filed October 3, 2007, to revive the above-identified design application.

The petition is **GRANTED**.

The application became abandoned July 11, 2007 for failure to timely submit correct formal drawings, as required by the Notice of Allowability, mailed April 10, 2007. The Notice of Allowability set a three month statutory period of time for reply. A Notice of Abandonment was mailed on August 24, 2007.

The petition satisfies the requirements of 37 CFR 1.137(b) in that petitioner has supplied (1) the reply in the form of the corrected formal drawings, (2) the required petition fee, (3) a proper statement of unintentional delay, and (4) a terminal disclaimer and fee as required by 37 CFR 1.137(d). Accordingly, the failure to timely submit corrected formal drawings as required by the Notice of Allowability is accepted as being unintentionally delayed.

The terminal disclaimer is accepted and has been made of record. Any continuing application filed from this application must contain a copy of the terminal disclaimer. The copy of the terminal disclaimer must be filed with a cover letter requesting the terminal disclaimer be recorded on the continuing application. A copy of this decision should be attached to the cover letter.

Telephone inquiries concerning this decision should be directed to the undersigned at (571) 272-3205.

This application is being referred to Publishing Division for further processing in accordance with this decision on petition.

Alesia M. Brown
Petitions Attorney
Office of Petitions

UNITED STATES PATENT AND TRADEMARK OFFICE

Commissioner for Patents
United States Patent and Trademark Office
P.O. Box 1450
Alexandria, VA 22313-1450
www.uspto.gov

THE PROCTER & GAMBLE COMPANY
INTELLECTUAL PROPERTY DIVISION - WEST BLDG.
WINTON HILL BUSINESS CENTER - BOX 412
6250 CENTER HILL AVENUE
CINCINNATI OH 45224

COPY MAILED

DEC 1 2 2007

OFFICE OF PETITIONS

In re Application of	:	
MARTYNUS et al.	:	
Application No. 29/257,705	:	DECISION ON PETITION
Filed: 04/10/2006	:	
Attorney Docket No. CD599M	:	

This is a decision on the petition under 37 CFR 1.137(b), filed August 10, 2007, which is being treated as a petition under 37 CFR 1.181 to withdraw the holding of abandonment in the above-identified application.

The petition is GRANTED.

On August 7, 2007, the Office mailed a Corrected Notice of Allowance and Fee(s) Due, which re-started the three-month statutory period for payment of the issue fee. On August 10, 2007, petitioner paid the $800.00 issue fee. Accordingly, petitioner submitted a timely response within the three-month statutory period of the mail date of the Corrected Notice of Allowance of August 7, 2007.

In view of the above, the holding of abandonment is hereby withdrawn. The application is restored to pending status in view of the fact that a response was timely submitted. The $1,500.00 petition fee is unnecessary and will be refunded to the Deposit Account.

The matter is being referred to the Office of Patent Publications for issuance of the payment.

Telephone inquiries concerning this decision may be directed to the undersigned at (571) 272-3211.

Christina Tartera Donnell

Christina Tartera Donnell
Senior Petitions Attorney
Office of Petitions

PTO/SB/27 (09-04)
Approved for use through 07/31/2006. OMB 0651-0031
U.S. Patent and Trademark Office; U.S. DEPARTMENT OF COMMERCE
Under the Paperwork Reduction Act of 1995, no persons are required to respond to a collection of information unless it displays a valid OMB control number.

REQUEST FOR EXPEDITED EXAMINATION OF A DESIGN APPLICATION (37 CFR 1.155)

Application Number	TBA
Filing Date	April 11, 2006
First Named Inventor	Andrew CAINE
Title	Portion of a Shoe Upper
Atty Docket Number	015127.00718

113000 U.S. PTO
29/257750
041106

ADDRESS TO:
MAIL STOP EXPEDITED DESIGN
COMMISSIONER FOR PATENTS
P.O. Box 1450
Alexandria, VA 22313-1450

Approved
Jacqueline M. Stone 4-20-06
Jacqueline M. Stone, Director
Technology Center 1700

This is a request for expedited examination of a design application under 37 CFR 1.155.

NOTE: If the Request made by this form accompanies original application papers, include form PTO/SB/18 "Design Patent Application Transmittal" or its equivalent.

D2/896, 902, 907, 908, 943, 944, 945, 946, 969, 972, 973, 974

Keyword search of USPTO EAST database (for combination of terms "portion," Shoe," and "upper")

Related applications

If not previously filed for the above-identified application, the following items required by 37 CFR 1.155 are enclosed:
- Formal drawings (see 37 CFR 1.84).
- The fee set forth in 37 CFR 1.17(k).
- An information disclosure statement in compliance with 37 CFR 1.98.

Signature — April 11, 2006 Date

H. Wayne Porter — Typed or printed name

42,084 — Registration Number, if applicable

(202) 824-3000 — Telephone Number

WARNING: Information on this form may become public. Credit card information should not be included on this form. Provide credit card information and authorization on PTO-2038.

This collection of information is required by 37 CFR 1.155. The information is required to obtain or retain a benefit by the public which is to file (and by the USPTO to process) an application. Confidentiality is governed by 35 U.S.C. 122 and 37 CFR 1.11 and 1.14. This collection is estimated to take 6 minutes to complete, including gathering, preparing, and submitting the completed application form to the USPTO. Time will vary depending upon the individual case. Any comments on the amount of time you require to complete this form and/or suggestions for reducing this burden, should be sent to the Chief Information Officer, U.S. Patent and Trademark Office, U.S. Department of Commerce, P.O. Box 1450, Alexandria, VA 22313-1450. DO NOT SEND FEES OR COMPLETED FORMS TO THIS ADDRESS. SEND TO: Mail Stop Expedited Design, Commissioner for Patents, P.O. Box 1450, Alexandria, VA 22313-1450.
If you need assistance in completing the form, call 1-800-PTO-9199 and select option 2.

04/12/2006 SSITHIB1 00000053 29257750

01 ~~FC:1012~~	~~280.00 DA~~
02 ~~FC:1112~~	~~100.00 DA~~
03 ~~FC:1312~~	~~130.00 DA~~
04 FC:1802	900.00 DA

SPE RESPONSE FOR CERTIFICATE OF CORRECTION

Paper No.: X

DATE : April 07, 2008

TO SPE OF : ART UNIT 2912

SUBJECT : Request for Certificate of Correction for Appl. No.: 29/257767 Patent No.: D556739 S

Deleted: 3683

Deleted: 11

Deleted: 452049

Deleted: 7234574

Deleted: B2

A response is requested with respect to a request for a certificate of correction.

With respect to the change(s) requested to correct Office and/or Applicant's errors, should the patent read as shown in the certificate of correction attached herewith or the COCIN document(s), in IFW images for the above-identified patented application? No new matter should be introduced, nor should the scope or meaning of the claims be changed.

If the response is for an IFW, within **7** days, please complete and forward the response, to the employee (named below) via scanning into application images, using document code **COCX**.

DO NOT SENT TO ATTORNEY

If the response is for a paper file wrapper, please complete the response and forward the response with the paper file wrapper, to the employee (named below), within **7** days, to:

Certificates of Correction Branch (CofC)
South Tower - 9A22
Palm Location 7580

You can fax the Directors/SPE response to 571-270-9990

LAMONTE NEWSOME
Certificates of Correction Branch
703-308-9390 ext. 112

Thank You For Your Assistance

The request for issuing the above-identified correction(s) is hereby:
Note your decision on the appropriate box.

- ☑ **Approved** — **All** changes apply.
- ☐ **Approved in Part** — Specify below which changes **do not** apply.
- ☐ **Denied** — State the reasons for denial below.

Comments: _____

STELLA M. REID
SUPERVISORY PATENT EXAMINER
SPE

2912
Art Unit

SPE RESPONSE FOR CERTIFICATE OF CORRECTION

Paper No.:20070628

DATE : June 29, 2007

TO SPE OF : ART UNIT 2911 29 257 780

SUBJECT : Request for Certificate of Correction on Patent No.: D536150

A response is requested with respect to the accompanying request for a certificate of correction.

Please complete this form and return with file, within **7** days to:
Certificates of Correction Branch - PK 3-910
Palm location **7590** - Tel. No. 305-8201

With respect to the change(s) requested, correcting Office and/or Applicant's errors, should the patent read as shown in the certificate of correction? No new matter should be introduced, nor should the scope or meaning of the claims be changed.

Thank You For Your Assistance **Certificates of Correction Branch**

The request for issuing the above-identified correction(s) is hereby:
Note your decision on the appropriate box.

☒ **Approved** **All** changes apply.

☐ **Approved in Part** Specify below which changes **do not** apply.

☐ **Denied** State the reasons for denial below.

Comments:

SPE: Cathron Brooks **Art Unit** 2911

PTOL-306 (Rev. 7/03) U.S. DEPARTMENT OF COMMERCE Patent and Trademark Office

CATHRON C. BROOKS
PRIMARY EXAMINER
SPE, 2911

UNITED STATES DEPARTMENT OF COMMERCE
Patent and Trademark Office
ASSISTANT SECRETARY OF COMMERCE AND
COMMISSIONER OF PATENTS AND TRADEMARKS
Washington, DC 20231

8/5/08

Patent No. :D570053
Inventor(s) :Burrowes
Issued : 5/27/2008
Title : PERFUME SAMPLER VAPORIZER
Atty.doc./File No.

Request for Certificates of Correction

Consideration has been given to your request for the issuance of a Certificate of Correction, for the above – identified patent under the provisions of CFR 1.322.

Inspection of the application for the patent reveals that item [30] is printed in accordance with the record. Therefore being no fault on the Patent and Trademark Office, It has no authority to issue a certificate of correction under the provision of 1.322.

In view of the forgoing, your request in this matter, is hereby denied.

Future written correspondence concerning this matter should be filed and directed to Decisions & Certificates of Correction Branch.

Henry Randall
Cecelia Newman
Decisions & Certificates
of Correction Branch
(703) 308-9390 Ext. 108

THE PROCTER & GAMBLE COMPANY
INTELLECTUAL PROPERTY DIVISION
WINTON HILL BUSINESS CENTER- BOX 412
6250 CENTER HILL AVENUE
CINCINNATI, OH 45224

HR/CBN

SCAN! **Please forward case and paper to address shown below.**

SPE RESPONSE FOR CERTIFICATE OF CORRECTION

Paper No.: _____

DATE : 10/29/08

TO SPE OF : ART UNIT 2913 Veynar Caron (Spe)

SUBJECT : Request for Certificate of Correction for Appl. No.: 29/257791 Patent No.: D570053

Please respond to this request for a certificate of correction within 7 days.

Please review the requested changes/corrections as shown in the attached certificate of correction. Please complete this form (see below) and forward it with the file to:

Certificates of Correction Branch (CofC)
South Tower - 9A22
Palm Location 7580

HENRY RANDALL
Certificates of Correction Branch
703-308-9390 ext. _____

Thank You For Your Assistance

The request for issuing the above-identified correction(s) is hereby:

Note your decision on the appropriate box.

- ☒ Approved — All changes apply.
- ☐ Approved in Part — Specify below which changes do not apply.
- ☐ Denied — State the reasons for denial below.

Comments: _____

Caron D Veynar

CARON D. VEYNAR
SUPERVISORY PATENT EXAMINER

SPE

2913
Art Unit

UNITED STATES PATENT AND TRADEMARK OFFICE

Commissioner for Patents
United States Patent and Trademark Office
P.O. Box 1450
Alexandria, VA 22313-1450
www.uspto.gov

MORRISS O'BRYANT COMPAGNI, P.C.
136 SOUTH MAIN STREET
SUITE 700
SALT LAKE CITY UT 84101

COPY MAILED

FEB 12 2007

OFFICE OF PETITIONS

In re Application of :
Eric N. Gray :
Application No. 29/257,837 : ON PETITION
Filed: April 11, 2006 :
Attorney Docket No. 3644.UPBC.DC :

This is a decision on the petition, filed February 8, 2007, under 37 CFR 1.313(c)(3) to withdraw the above-identified application from issue after payment of the issue fee.

The petition is **GRANTED**.

The above-identified application is withdrawn from issue in favor of a continued prosecution application (CPA) under 37 CFR 1.53(d).

Petitioner is advised that the issue fee paid on November 20, 2006 in the parent application is not refundable nor can it be applied towards any new Notice of Allowance which may issue on the CPA filed February 8, 2007.

Petitioner is encouraged to submit the Request for Correction of Inventorship as soon as possible before the above application is allowed again.

Telephone inquiries should be directed to the undersigned at (571) 272-3208.

This matter is being referred to Technology Center AU 2912 for processing of the CPA.

Karen Creasy

Karen Creasy
Petitions Examiner
Office of Petitions

UNITED STATES PATENT AND TRADEMARK OFFICE

Commissioner for Patents
United States Patent and Trademark Office
P.O. Box 1450
Alexandria, VA 22313-1450
www.uspto.gov

ROBERT D. GUNDERMAN, JR.
PATENT TECHNOLOGIES, LLC
150 LUCIUS GORDON DRIVE, SUITE 205
WEST HENRIETTA, NY 14586

COPY MAILED

NOV 2 1 2006

OFFICE OF PETITIONS

In re Application of	:	
Todd P. Lehmann et al	:	
Application No. 29/257,846	:	DECISION ON PETITION
Filed: April 11, 2006	:	TO MAKE SPECIAL UNDER
Attorney Docket No. TPL 009	:	37 CFR 1.102(c)(1)
	:	

This is a decision on the petition under 37 CFR 1.102(c)(1), filed May 24, 2006, to make the above-identified application special based on applicant's age as set forth in M.P.E.P. § 708.02, Section IV.

The petition is **GRANTED**.

A grantable petition to make an application special under 37 CFR 1.102(c)(1) and MPEP § 708.02, Section IV: Applicant's Age must be accompanied by evidence showing that at least one of the applicants is 65 years of age, or more, such as a birth certificate or a statement by applicant. No fee is required

The instant petition includes a copy of Inventor Malcolm Warren's birth certificate showing that he is over 65 years of age. Accordingly, the above-identified application has been accorded "special" status.

Telephone inquiries concerning this decision should be directed to Irvin Dingle at 571-272-3210.

All other inquiries concerning either the examination or status of the application should be directed to the Technology Center.

The application is being forwarded to the Technology Center Art Unit 2914 for action on the merits commensurate with this decision.

Irvin Dingle
Petitions Examiner
Office of Petitions

UNITED STATES PATENT AND TRADEMARK OFFICE

COMMISSIONER FOR PATENTS
UNITED STATES PATENT AND TRADEMARK OFFICE
P.O. BOX 1450
ALEXANDRIA, VA 22313-1450
WWW.USPTO.GOV

Paper No.

RADER FISHMAN & GRAUER PLLC
LION BUILDING
1233 20TH STREET N.W., SUITE 501
WASHINGTON DC 20036

COPY MAILED

APR 15 2008

OFFICE OF PETITIONS

In re Application of	:	
Kouichi Wakasugi et al.	:	
Application No. 29/257,891	:	DECISION ON PETITION
Filed: April 13, 2006	:	PURSUANT TO
Attorney Docket Number: SER-0035	:	37 C.F.R. § 1.137(b)
Title: CHAIR	:	

This is a decision on the petition pursuant to 37 C.F.R. § 1.137(b), to revive the above-identified application, filed on August 17, 2007.

This petition is **DISMISSED**.

The above-identified application became abandoned for failure to submit the issue fee and corrected drawings in a timely manner in reply to the Notice of Allowance and Issue Fee Due, mailed March 13, 2007, which set a shortened statutory period for reply of three months. No response was received, and no extensions of time are permitted for transmitting issue fees or corrected drawings[1]. Accordingly, the above-identified application became abandoned on June 14, 2007. A Notice of Abandonment was mailed on July 11, 2007.

A grantable petition pursuant to 37 C.F.R § 1.137(b) must be accompanied by:

(1) The reply required to the outstanding Office action or notice, unless previously filed;
(2) The petition fee as set forth in 37 C.F.R § 1.17(m);
(3) A statement that the entire delay in filing the

1 See M.P.E.P. § 710.02(e).

required reply from the due date for the reply until the filing of a grantable petition pursuant to this paragraph was unintentional. The Commissioner may require additional information where there is a question whether the delay was unintentional, and;

(2) Any terminal disclaimer (and fee as set forth in 37 C.F.R § 1.20(d)) required pursuant to paragraph (d) of this section.

With this petition, Petitioner has included the issue and petition fees, along with the proper statement of unintentional delay.

Petitioner has met requirements (2) - (3) of Rule 1.137(b).

Regarding the first requirement, the requirement has not been satisfied because Petitioner did not submit the required reply to the Office action. The required reply is the reply sufficient to have avoided abandonment, had such reply been timely filed[2]. In order for the application to be revived, petitioner must submit a reply that satisfies 37 C.F.R. § 1.137(b)(1) (i.e., corrected drawings). The petition was not accompanied by corrected drawings.

Regarding the fourth requirement, Petitioner has failed to provide the required terminal disclaimer and fee. See 37 C.F.R §§ 1.137(b)(4) and (d).

Any reply must be submitted within **TWO MONTHS** from the mail date of this decision. Extensions of time under 37 C.F.R. § 1.136(a) are permitted. The reply should include a cover letter entitled "Renewed Petition pursuant to 37 C.F.R. § 1.137(b)". This is not a final agency action within the meaning of 5 U.S.C § 704.

The renewed petition should indicate in a prominent manner that the attorney handling this matter is Paul Shanoski, and may be submitted by mail[3], hand-delivery[4], or facsimile[5].

If responding by mail, Petitioner is advised not to place the undersigned's name on the envelope. Only the information that appears in the footnote should be included - adding anything

---

2 See M.P.E.P. § 711.03(c).

3 Mail Stop Petition, Commissioner for Patents, United States Patent and Trademark Office, P.O. Box 1450, Alexandria, VA, 22313-1450.
4 Customer Window, Randolph Building, 401 Dulaney Street, Alexandria, VA, 22314.
5 (571) 273-8300- please note this is a central facsimile number.

else to the address will delay the delivery of the response to the undersigned.

Telephone inquiries regarding *this decision* should be directed to the undersigned at (571) 272-3225[6]. All other inquiries concerning examination procedures or status of the application should be directed to the Technology Center.

/Paul Shanoski/
Paul Shanoski
Senior Attorney
Office of Petitions

---

6 Petitioner will note that all practice before the Office should be in writing, and the action of the Office will be based exclusively on the written record in the Office. See 37 C.F.R. § 1.2. As such, Petitioner is reminded that no telephone discussion may be controlling or considered authority for any further action(s) of Petitioner.

UNITED STATES PATENT AND TRADEMARK OFFICE

COMMISSIONER FOR PATENTS
UNITED STATES PATENT AND TRADEMARK OFFICE
P.O. BOX 1450
ALEXANDRIA, VA 22313-1450
WWW.USPTO.GOV

Paper No.

RADER FISHMAN & GRAUER PLLC
LION BUILDING
1233 20TH STREET N.W., SUITE 501
WASHINGTON DC 20036

COPY MAILED
JUN 09 2008

In re Application of	:	
Kouichi Wakasugi et al.	:	
Application No. 29/257,891	:	DECISION ON RENEWED
Filed: April 13, 2006	:	PETITION PURSUANT TO
Attorney Docket Number: SER-0035	:	37 C.F.R. § 1.137(b)
Title: CHAIR	:	

This is a decision on the renewed petition pursuant to 37 C.F.R. § 1.137(b), to revive the above-identified application, filed on May 6, 2008.

This renewed petition is **GRANTED**.

The above-identified application became abandoned for failure to submit the issue fee and corrected drawings in a timely manner in reply to the Notice of Allowance and Issue Fee Due, mailed March 13, 2007, which set a shortened statutory period for reply of three months. No response was received, and no extensions of time are permitted for transmitting issue fees or corrected drawings[1]. Accordingly, the above-identified application became abandoned on June 14, 2007. A Notice of Abandonment was mailed on July 11, 2007.

A grantable petition pursuant to 37 C.F.R § 1.137(b) must be accompanied by:

(1) The reply required to the outstanding Office action or notice, unless previously filed;
(2) The petition fee as set forth in 37 C.F.R § 1.17(m);
(3) A statement that the entire delay in filing the

1 See M.P.E.P. § 710.02(e).

required reply from the due date for the reply until the filing of a grantable petition pursuant to this paragraph was unintentional. The Commissioner may require additional information where there is a question whether the delay was unintentional, and;

(2) Any terminal disclaimer (and fee as set forth in 37 C.F.R § 1.20(d)) required pursuant to paragraph (d) of this section.

An original petition pursuant to 37 C.F.R. § 1.137(b) was filed on August 17, 2007, and dismissed via the mailing of a decision on April 15, 2008. The decision indicated that Petitioner had included the issue and petition fees, along with the proper statement of unintentional delay. The decision further indicated that Petitioner has met requirements (2) - (3) of Rule 1.137(b). The first and fourth requirements had not been met, as Petitioner failed to include corrected drawings, a terminal disclaimer, and the fee that is associated with the filing of the same.

With this renewed petition, Petitioner has included corrected drawings, a terminal disclaimer, and the fee that is associated with the filing of the same.

Pursuant to this decision, the Office of Patent Publication will be notified of this decision so that the present application can be processed into a patent.

Telephone inquiries regarding *this decision* should be directed to the undersigned at (571) 272-3225[2]. All other inquiries concerning the status of the application should be directed to the Office of Patent Publication at 571-272-4200.

/Paul Shanoski/
Paul Shanoski
Senior Attorney
Office of Petitions

2 Petitioner will note that all practice before the Office should be in writing, and the action of the Office will be based exclusively on the written record in the Office. See 37 C.F.R. § 1.2. As such, Petitioner is reminded that no telephone discussion may be controlling or considered authority for any further action(s) of Petitioner.

Application Number	Application/Control No.	Applicant(s)/Patent under Reexamination
29/257,891	29/257,891	

Document Code - DISQ	Internal Document – DO NOT MAIL

TERMINAL DISCLAIMER	☒ APPROVED	☐ DISAPPROVED
Date Filed : 05/06/2008	This patent is subject to a Terminal Disclaimer	

Approved/Disapproved by:
Paul Shanoski

U.S. Patent and Trademark Office

UNITED STATES PATENT AND TRADEMARK OFFICE

Commissioner for Patents
United States Patent and Trademark Office
P.O. Box 1450
Alexandria, VA 22313-1450
www.uspto.gov

HAYNES AND BOONE LLP
901 MAIN STREET
SUITE 3100
DALLAS TX 75202

COPY MAILED

NOV 29 2007

OFFICE OF PETITIONS

In re Application of	:	
Akemi Rhea	:	
Application No. 29/257,917	:	DECISION ON PETITION
Filed: April 11, 2006	:	
Attorney Docket No. 34863.5	:	

This is a decision on the petition to revive the above-identified application under 37 CFR 1.137(b), filed March 12, 2007.

The petition is **DISMISSED.**

Any request for reconsideration of this decision must be submitted within TWO (2) MONTHS from the mail date of this decision. Extensions of time under 37 CFR 1.136(a) are permitted. The reconsideration request should include a cover letter entitled "Renewed Petition Under 37 CFR 1.137(b)." No further petition fee is due for a renewed petition. This is **not** a final agency decision within the meaning of 5 USC 704.

The above-identified application became abandoned for failure to timely pay the issue fee in response to the Notice of Allowance, mailed November 29, 2006. This Notice set a statutory period for reply of three (3) months for issue fee transmittal. No issue fee having been received, the application became abandoned on March 1, 2007. The Office mailed a Notice of Abandonment on June 15, 2007.

A grantable petition under 37 CFR 1.137(b) must be accompanied by: (1) the required reply, unless previously filed; (2) the petition fee as set forth in 37 CFR 1.17(m); (3) a statement that the entire delay in filing the required reply from the due date for the reply until the filing of a grantable petition pursuant to 37 CFR 1.137(b) was unintentional; and (4) any terminal disclaimer (and fee as set forth in 37 CFR 1.20(d)) required by 37 CFR 1.137(d).

The instant petition lacks item (4). The instant application is a design application, and accordingly requires a terminal disclaimer and accompanying fee. See 37 CFR 1.137(d).

Further correspondence concerning this application should be addressed as follows:

By mail: Mail Stop Petitions
Commissioner for Patents
P.O. Box 1450
Alexandria VA 22313-1450

By FAX: (571)273-8300
Attn: Office of Petitions

Telephone inquiries concerning this decision should be directed to the undersigned at 571-272-3207.

Cliff Congo
Petitions Attorney
Office of Petitions

UNITED STATES PATENT AND TRADEMARK OFFICE

Commissioner for Patents
United States Patent and Trademark Office
P.O. Box 1450
Alexandria, VA 22313-1450
www.uspto.gov

HAYNES AND BOONE LLP
901 MAIN STREET
SUITE 3100
DALLAS TX 75202

COPY MAILED

FEB 01 2008

OFFICE OF PETITIONS

In re Application of	:	
Akemi Rhea	:	
Application No. 29/257,917	:	DECISION ON PETITION
Filed: April 11, 2006	:	
Attorney Docket No. 34863.5	:	

This is a decision on the renewed petition to revive under 37 CFR 1.137(b), filed January 9, 2008.

The petition is **GRANTED**.

The above-identified application became abandoned for failure to timely pay the issue fee in response to the Notice of Allowance, mailed November 29, 2006. This Notice set a statutory period for reply of three (3) months for issue fee transmittal. No issue fee having been received, the application became abandoned on March 1, 2007. The Office mailed a Notice of Abandonment on June 15, 2007. Applicant filed a petition to revive under 37 CFR 1.137(b) on March 12, 2007. However, the petition was dismissed in a decision mailed on November 29, 2007. The decision explained that the petition lacked a terminal disclaimer, a requirement because the application is a design application.

With the instant renewed petition, petitioner has submitted a terminal disclaimer (together with the fee). The other requirements for a grantable petition were previously satisfied with the petition filed March 12, 2007.

The matter is being forwarded to the Office of Patent Publication for processing into a patent.

Telephone inquiries concerning this decision should be directed to the undersigned at 571-272-3207.

Cliff Congo
Petitions Attorney
Office of Petitions

UNITED STATES PATENT AND TRADEMARK OFFICE

Commissioner for Patents
United States Patent and Trademark Office
P.O. Box 1450
Alexandria, VA 22313-1450
www.uspto.gov

CREATIVE LABS, INC.
LEGAL DEPARTMENT
1901 MCCARTHY BLVD
MILPITAS, CA 95035

COPY MAILED

JUL 09 2008

OFFICE OF PETITIONS

In re Application of	:	
LIOW, et al.	:	
Application No. 29/257,918	:	DECISION ON PETITION
Filed: April 11, 2006	:	UNDER 37 CFR 1.137(b)
Attorney Docket No. **CTLD155US**	:	

This is a decision on the petition under the unintentional provisions of 37 CFR 1.137(b), filed October 29, 2007 to revive the above-identified application.

The petition is **DISMISSED.**

Any request for reconsideration of this decision must be submitted within TWO (2) MONTHS from the mail date of this decision. Extensions of time under 37 CFR 1.136(a) are permitted. The reconsideration request should include a cover letter entitled "Renewed Petition under 37 CFR 1.137(b)." This is **not** a final agency action within the meaning of 5 U.S.C. § 704.

This application became abandoned for failure to timely pay the issue and publication fees and to submit corrected formal drawings on or before August 27, 2007 as required by the Notice of Allowance and Fee(s) Due and the Notice of Allowability, mailed May 25, 2007. Accordingly, the date of abandonment of this application is August 28, 2007.

A grantable petition under 37 CFR 1.137(b) must be accompanied by: (1) the required reply, unless previously filed; (2) the petition fee as set forth in 37 CFR 1.17(m); (3) a statement that the entire delay in filing the required reply from the due date for the reply until the filing of a grantable petition pursuant to 37 CFR 1.137(b) was unintentional; and (4) any terminal disclaimer (and fee as set forth in 37 CFR 1.20(d)) required by 37 CFR 1.137(d). Where there is a question as to whether either the abandonment or the delay in filing a petition under 37 CFR 1.137 was unintentional, the Director may require additional information. See MPEP 711.03(c)(II)(C) and (D). The instant petition lacks item (4) a terminal disclaimer and fee required by 37 CFR 1.137(d).

Further correspondence with respect to this matter should be addressed as follows:

By Mail: Mail Stop PETITION
Commissioner for Patents
P. O. Box 1450
Alexandria, VA 22313-1450

By hand: U. S. Patent and Trademark Office
Customer Service Window, Mail Stop Petitions
Randolph Building
401 Dulany Street
Alexandria, VA 22314

The centralized facsimile number is **(571) 273-8300.**

Telephone inquiries concerning this decision should be directed to Monica A. Graves at (571) 272-7253.

Brian W. Brown
Petitions Examiner
Office of Petitions

UNITED STATES PATENT AND TRADEMARK OFFICE

Commissioner for Patents
United States Patent and Trademark Office
P.O. Box 1450
Alexandria, VA 22313-1450
www.uspto.gov

CREATIVE LABS, INC.
LEGAL DEPARTMENT
1901 MCCARTHY BLVD
MILPITAS CA 95035

COPY MAILED
JAN 12 2009

In re Application of	:	
Yuen Khim Joseph LIOW, et al.	:	
Application No. 29/257,918	:	DECISION ON PETITION
Filed: April 11, 2006	:	UNDER 37 CFR 1.137(b)
Attorney Docket No. CTLD155US	:	

This is a decision on the renewed petition under the unintentional provisions of 37 CFR 1.137(b), filed September 9, 2008, to revive the above-identified application.

The petition is **GRANTED**.

This application became abandoned for failure to timely pay the issue and publication fees and to submit corrected formal drawings on or before August 27, 2007, as required by the Notice of Allowance/Allowability mailed, May 25, 2007. Accordingly, the date of abandonment of this application is August 28, 2007.

The petition satisfies the requirements of 37 CFR 1.137(b) in that petitioner has supplied (1) the reply in the form of replacement drawings; (2) the petition fee of $770, (3) an adequate statement of unintentional delay and (4) a terminal disclaimer and fee as required by 37 CFR 1.137(b).

The terminal disclaimer filed September 9, 2008 has been entered and made of record. Any continuing application filed from this application must contain a copy of the terminal disclaimer. The copy of the terminal disclaimer must be filed with a cover letter requesting the terminal disclaimer be recorded on the continuing application. A copy of this decision should be attached to the cover letter.

Telephone inquiries concerning this decision should be directed to Monica A. Graves at (571) 272-7253.

This application is being referred to Office of Data Management for processing into a patent.

Brian W. Brown
Petitions Examiner
Office of Petitions

UNITED STATES PATENT AND TRADEMARK OFFICE

Commissioner for Patents
United States Patent and Trademark Office
P.O. Box 1450
Alexandria, VA 22313-1450
www.uspto.gov

Gerald L. Smith
Mueller and Smith, LPA
7700 Rivers Edge Drive
Columbus OH 43235

COPY MAILED

MAR 26 2008

OFFICE OF PETITIONS

In re Application of :
AMY L. ESSIG :
Application No. 29/257,959 : DECISION ON PETITION
Filed: 04/13/2006 :
Attorney Docket No. ALE 2-002 :

This is a decision on the renewed petition under 37 CFR 1.137(b), filed December 6, 2007, to revive the above-identified application. The petition was recently forwarded to the Office of Petitions for a decision on the merits. The Office sincerely apologizes for any inconvenience.

The above-identified application became abandoned for failure to file a timely response to the nonfinal Office action, mailed February 23, 2007, which set a three-month shortened statutory period for reply. The above-identified application became abandoned on May 24, 2007. On October 3, 2007, the Office mailed a Notice of Abandonment.

The petition satisfies the requirements of 37 CFR 1.137(b) in that petitioner has supplied (1) the reply in the form of an amendment; (2) the petition fee; (3) a proper statement of unintentional delay; and (4) a terminal disclaimer and fee as required by 37 CFR 1.137(d).

The terminal disclaimer is accepted and has been made of record.

This matter is being referred to Technology Center AU 2915.

Telephone inquiries related to this decision may be directed to the undersigned at (571) 272-3211.

Christina T. Donnell

Christina Tartera Donnell
Senior Petitions Attorney
Office of Petitions

SPE RESPONSE FOR CERTIFICATE OF CORRECTION

DATE : 7-1-07

Paper No.: _____

TO SPE OF : **Technology Center** 2915

29/257993

SUBJECT : Request for Certificate of Correction on Patent No.: D540226S

A response is requested with respect to the accompanying request for a certificate of correction.

Please complete this form and return with file, within **7** days to:

Palm location **7580, Certificates of Correction Branch – South Tower – 9A22**

If response is for an IFW, **return to employee (named below) via PUBSCofC Team in MADRAS.**

With respect to the change(s) requested, correcting Office and/or Applicant's errors, should the patent read as shown in the certificate of correction (COCIN)? No new matter should be introduced, nor should the scope or meaning of the claims be changed.

Elisha Evans

Thank You For Your Assistance

Certificates of Correction Branch

Tel. No. 703-308-9390 EXT 110

The request for issuing the above-identified correction(s) is hereby:

Note your decision on the appropriate box.

- ☑ **Approved** — **All** changes apply.
- ☐ **Approved in Part** — Specify below which changes **do not** apply.
- ☐ **Denied** — State the reasons for denial below.

Comments:

Gary R. Watson — **SPE**

2915 — **Art Unit**

PTO/SB/27 (09-04)
Approved for use through 07/31/2006. OMB 0651-0031
U.S. Patent and Trademark Office; U.S DEPARTMENT OF COMMERCE
Under the Paperwork Reduction ACT of 1995, no persons are required to respond to collection of information unless it displays a valid OMB control number.

REQUEST FOR EXPEDITED EXAMINATION OF A DESIGN APPLICATION (37 CFR 1.155)

Application Number	N/A
Filing Date	04/13/2006
First Named Inventor	ROGER T. YOUNG
Title	Hammermill Hammer
Atty Docket Number	USDA-0084

113000 U.S. PTO
29/258000
041306

ADDRESS TO:

MAIL STOP EXPEDITED DESIGN
COMMISSIONER FOR PATENTS
P.O. Box 1450
Alexandria, VA 22313-1450

This is a request for expedited examination of a design application under 37 CFR 1.155.

NOTE: If the Request made by this form accompanies original application papers, include form PTO/SB/18 "Design Patent Application Transmittal" or its equivalent.

A preexamination search was conducted. The field of search was:

CLASS 241; SUBCLASS 194, 195, 197

Related applications: (ABN) 10,915,750 11,150,430 29,231,840 29,244,331 29,244,330

If not previously filed for the above-identified application, the following items required by 37 CFR 1.155 are enclosed:

- Formal drawings (see 37 CFR 1.84).
- The fee set forth in 37 CFR 1.17(k).
- An information disclosure statement in compliance with 37 CFR 1.98.

Approved 5-16-06
Jacqueline M. Stone
Jacqueline M. Stone, Director
Technology Center 1700/2900

Signature — April 13, 2006 (Date)

Jay R. Hamilton (Typed or printed name) — 50,644 (Registration Number, if applicable)

563-441-0207 (Telephone Number)

WARNING: Information on this form may become public. Credit card information should not be included on this form. Provide credit card information and authorization on PTO-2038.

This collection of information is required by 37 CFR 1.155. The information is required to obtain or retain a benefit by the public which is to file (and by the USPTO to process) an application. Confidentiality is governed by 35 U.S.C. 122 and 37 CFR 1.11 and 1.14. This collection is estimated to take 6 minutes to complete, including gathering, preparing, and submitting the completed application form to the USPTO. Time will vary depending upon the individual case. Any comments on the amount of time you require to complete this form and/or suggestions for reducing this burden, should be sent to the Chief Information Officer, U.S. Patent and Trademark Office, U.S. Department of Commerce, P.O. Box 1450, Alexandria, VA 22313-1450. DO NOT SEND FEES OR COMPLETED FORMS TO THIS ADDRESS. SEND TO: Commissioner for Patents, P.O. Box 1450, Alexandria, VA 22313-1450.

If you need assistance in completing the form, call 1-800-PTO-9199 and select option 2.

04/17/2006 HVUONG1 00000063 29258000
01 FC:1802 900.00 OP

UNITED STATES PATENT AND TRADEMARK OFFICE

COMMISSIONER FOR PATENTS
UNITED STATES PATENT AND TRADEMARK OFFICE
P.O. BOX 1450
ALEXANDRIA, VA 22313-1450
www.uspto.gov

ASHKAN NAJAFI, P.A.
6817 SOUTHPOINT PARKWAY
SUITE 2301
JACKSONVILLE, FL 32216

COPY MAILED

JUL 12 2007

OFFICE OF PETITIONS

In re Application of :
Michael A. Davis :
Application No. 29/258,025 : ON PETITION
Filed: April 14, 2006 :
Attorney Docket No. NWK4286 :

This is a decision on the petition, filed January 31, 2007, to revive the above-identified application under 37 CFR 1.137(b).

The petition is **DISMISSED**.

Any request for reconsideration of this decision must be submitted within TWO (2) MONTHS from the mail date of this decision. Extensions of time under 37 CFR 1.136(a) are permitted. The reconsideration request should include a cover letter entitled "Renewed Petition under 37 CFR 1.137(b)." This is **not** a final agency action within the meaning of 5 U.S.C. § 704.

The application became abandoned for failure to pay the issue fee on or before January 19, 2007. A Notice of Abandonment was subsequently mailed on June 15, 2007.

A grantable petition under 37 CFR 1.137(b)[1] must be accompanied by: (1) the required reply,[2] unless previously filed; (2) the petition fee as set forth in 37 CFR 1.17(m); (3) a statement that the entire delay in filing the required reply from the due date for the reply until the filing of a grantable petition pursuant to 37 CFR 1.137(b) was unintentional; and (4) any terminal disclaimer (and fee as set forth in 37 CFR 1.20(d)) required by 37 CFR 1.137(c). Where there is a question as to whether either the abandonment or the delay in filing a petition under 37 CFR 1.137 was unintentional, the Commissioner may require additional information. See MPEP 711.03(c)(III)(C) and (D).

---

[1] As amended effective December 1, 1997. See Changes to Patent Practice and Procedure; Final Rule Notice, 62 Fed. Reg. 53131, 53194-95 (October 10, 1997), 1203 Off. Gaz. Pat. Office 63, 119-20 (October 21, 1997).

[2] In a nonprovisional application abandoned for failure to prosecute, the required reply may be met by the filing of a continuing application. In an application or patent, abandoned or lapsed for failure to pay the issue fee or any portion thereof, the required reply must be the payment of the issue fee or any outstanding balance thereof.

The petition lacks items 4 above. Since the above-identified application is a design application, 37 CFR 1.137(d) requires a terminal disclaimer dedicating to the public a terminal part of the term of any patent granted thereon equivalent to the period of abandonment of the application. The period of abandonment will be computed to be the number of months from the date of abandonment to the date of filing a grantable petition. A terminal disclaimer fee of $130 ($65 if small entity) is required. If the terminal disclaimer is signed by an assignee, the assignee must comply with the requirements of 37 CFR 3.73(b).

Further correspondence with respect to this matter should be addressed as follows:

By mail: Mail Stop PETITION
Commissioner for Patents
Post Office Box 1450
Alexandria, VA 22313-1450

By hand: U.S. Patent and Trademark Office
Customer Service Window, Mail Stop PETITION
Randolph Building
401 Dulany Street
Alexandria, VA 22314

The centralized facsimile number is **(571) 273-8300**.

Any questions concerning this matter may be directed to the undersigned at (571) 272-3204.

Sherry D. Brinkley
Petitions Examiner
Office of Petitions

UNITED STATES PATENT AND TRADEMARK OFFICE

COMMISSIONER FOR PATENTS
UNITED STATES PATENT AND TRADEMARK OFFICE
P.O. BOX 1450
ALEXANDRIA, VA 22313-1450
www.uspto.gov

ASHKAN NAJAFI, P.A.
6817 SOUTHPOINT PARKWAY
SUITE 2301
JACKSONVILLE, FL 32216

COPY MAILED

JUL 12 2007

OFFICE OF PETITIONS

In re Application of :
Michael A. Davis :
Application No. 29/258,025 : ON PETITION
Filed: April 14, 2006 :
Attorney Docket No. NWK4286 :

This is a decision on the petition, filed January 31, 2007, to revive the above-identified application under 37 CFR 1.137(b).

The petition is **DISMISSED**.

Any request for reconsideration of this decision must be submitted within TWO (2) MONTHS from the mail date of this decision. Extensions of time under 37 CFR 1.136(a) are permitted. The reconsideration request should include a cover letter entitled "Renewed Petition under 37 CFR 1.137(b)." This is **not** a final agency action within the meaning of 5 U.S.C. § 704.

The application became abandoned for failure to pay the issue fee on or before January 19, 2007. A Notice of Abandonment was subsequently mailed on June 15, 2007.

A grantable petition under 37 CFR 1.137(b)[1] must be accompanied by: (1) the required reply,[2] unless previously filed; (2) the petition fee as set forth in 37 CFR 1.17(m); (3) a statement that the entire delay in filing the required reply from the due date for the reply until the filing of a grantable petition pursuant to 37 CFR 1.137(b) was unintentional; and (4) any terminal disclaimer (and fee as set forth in 37 CFR 1.20(d)) required by 37 CFR 1.137(c). Where there is a question as to whether either the abandonment or the delay in filing a petition under 37 CFR 1.137 was unintentional, the Commissioner may require additional information. See MPEP 711.03(c)(III)(C) and (D).

---

[1] As amended effective December 1, 1997. See Changes to Patent Practice and Procedure; Final Rule Notice, 62 Fed. Reg. 53131, 53194-95 (October 10, 1997), 1203 Off. Gaz. Pat. Office 63, 119-20 (October 21, 1997).

[2] In a nonprovisional application abandoned for failure to prosecute, the required reply may be met by the filing of a continuing application. In an application or patent, abandoned or lapsed for failure to pay the issue fee or any portion thereof, the required reply must be the payment of the issue fee or any outstanding balance thereof.

RECEIVED
CENTRAL FAX CENTER
AUG 0 9 2007

The petition lacks items 4 above. Since the above-identified application is a design application, 37 CFR 1.137(d) requires a terminal disclaimer dedicating to the public a terminal part of the term of any patent granted thereon equivalent to the period of abandonment of the application. The period of abandonment will be computed to be the number of months from the date of abandonment to the date of filing a grantable petition. A terminal disclaimer fee of $130 ($65 if small entity) is required. If the terminal disclaimer is signed by an assignee, the assignee must comply with the requirements of 37 CFR 3.73(b).

Further correspondence with respect to this matter should be addressed as follows:

By mail: Mail Stop PETITION
Commissioner for Patents
Post Office Box 1450
Alexandria, VA 22313-1450

By hand: U.S. Patent and Trademark Office
Customer Service Window, Mail Stop PETITION
Randolph Building
401 Dulany Street
Alexandria, VA 22314

The centralized facsimile number is **(571) 273-8300**.

Any questions concerning this matter may be directed to the undersigned at (571) 272-3204.

Sherry D. Brinkley

Sherry D. Brinkley
Petitions Examiner
Office of Petitions

UNITED STATES PATENT AND TRADEMARK OFFICE

COMMISSIONER FOR PATENTS
UNITED STATES PATENT AND TRADEMARK OFFICE
P.O. BOX 1450
ALEXANDRIA, VA 22313-1450
www.uspto.gov

ASHKAN NAJAFI, P.A.
6817 SOUTHPOINT PARKWAY
SUITE 2301
JACKSONVILLE, FL 32216

COPY MAILED

JUL 12 2007

OFFICE OF PETITIONS

In re Application of
Michael A. Davis
Application No. 29/258,025
Filed: April 14, 2006
Attorney Docket No. NWK4286

ON PETITION

This is a decision on the petition, filed January 31, 2007, to revive the above-identified application under 37 CFR 1.137(b).

The petition is **DISMISSED**.

Any request for reconsideration of this decision must be submitted within TWO (2) MONTHS from the mail date of this decision. Extensions of time under 37 CFR 1.136(a) are permitted. The reconsideration request should include a cover letter entitled "Renewed Petition under 37 CFR 1.137(b)." This is **not** a final agency action within the meaning of 5 U.S.C. § 704.

The application became abandoned for failure to pay the issue fee on or before January 19, 2007. A Notice of Abandonment was subsequently mailed on June 15, 2007.

A grantable petition under 37 CFR 1.137(b)[1] must be accompanied by: (1) the required reply,[2] unless previously filed; (2) the petition fee as set forth in 37 CFR 1.17(m); (3) a statement that the entire delay in filing the required reply from the due date for the reply until the filing of a grantable petition pursuant to 37 CFR 1.137(b) was unintentional; and (4) any terminal disclaimer (and fee as set forth in 37 CFR 1.20(d)) required by 37 CFR 1.137(c). Where there is a question as to whether either the abandonment or the delay in filing a petition under 37 CFR 1.137 was unintentional, the Commissioner may require additional information. See MPEP 711.03(c)(III)(C) and (D).

[1] As amended effective December 1, 1997. See Changes to Patent Practice and Procedure: Final Rule Notice, 62 Fed. Reg. 53131, 53194-95 (October 10, 1997), 1203 Off. Gaz. Pat. Office 63, 119-20 (October 21, 1997).

[2] In a nonprovisional application abandoned for failure to prosecute, the required reply may be met by the filing of a continuing application. In an application or patent, abandoned or lapsed for failure to pay the issue fee or any portion thereof, the required reply must be the payment of the issue fee or any outstanding balance thereof.

The petition lacks items 4 above. Since the above-identified application is a design application, 37 CFR 1.137(d) requires a terminal disclaimer dedicating to the public a terminal part of the term of any patent granted thereon equivalent to the period of abandonment of the application. The period of abandonment will be computed to be the number of months from the date of abandonment to the date of filing a grantable petition. A terminal disclaimer fee of $130 ($65 if small entity) is required. If the terminal disclaimer is signed by an assignee, the assignee must comply with the requirements of 37 CFR 3.73(b).

Further correspondence with respect to this matter should be addressed as follows:

By mail: Mail Stop PETITION
Commissioner for Patents
Post Office Box 1450
Alexandria, VA 22313-1450

By hand: U.S. Patent and Trademark Office
Customer Service Window, Mail Stop PETITION
Randolph Building
401 Dulany Street
Alexandria, VA 22314

The centralized facsimile number is **(571) 273-8300.**

Any questions concerning this matter may be directed to the undersigned at (571) 272-3204.

Sherry D. Brinkley
Petitions Examiner
Office of Petitions

UNITED STATES PATENT AND TRADEMARK OFFICE

Commissioner for Patents
United States Patent and Trademark Office
P.O. Box 1450
Alexandria, VA 22313-1450
www.uspto.gov

ASHKAN NAJAFI, P.A.
6817 SOUTHPOINT PARKWAY
SUITE 2301
JACKSONVILLE, FL 32216

COPY MAILED

JAN 1 6 2008

OFFICE OF PETITIONS

In re Application of
Michael A. Davis
Application No. 29/258,025
Filed: April 14, 2006
Attorney Docket No. NWK4286

ON PETITION

This is a decision in response to the communication filed August 9, 2007, which is being treated as a renewed petition under 37 CFR 1.137(b) to revive the above-identified design application.

The petition is **GRANTED**.

The application became abandoned for failure to timely pay the issue fee on or before January 19, 2007, as required by the Notice of Allowance and Fee(s) Due, mailed October 19, 2006, which set a statutory period for reply of three (3) months. On January 31, 2007, a petition under 37 CFR 1.137(b) was filed; however, the petition was dismissed in a decision mailed July 12, 2007. On August 9, 2007, the present petition was filed.

The petition now satisfies the requirements of 37 CFR 1.137(b) in that petitioner has supplied (1) the reply in the form of the $400 issue fee, (2) the petition fee of $750, (3) an adequate statement of unintentional delay, and (4) a terminal disclaimer and fee as required by 37 CFR 1.137(d). Accordingly, the failure to timely pay the issue fee as required by the Notice of October 19, 2006 is accepted as being unintentionally delayed.

The terminal disclaimer is accepted and has been made of record. Any continuing application filed from this application must contain a copy of the terminal disclaimer. The copy of the terminal disclaimer must be filed with a cover letter requesting the terminal disclaimer be recorded on the continuing application. A copy of this decision should be attached to the cover letter.

The application is being referred to Publishing Division.

Telephone inquires related to this decision should be directed to the undersigned at (571) 272-3204. Telephone inquiries related to processing at Publishing Division should be directed to (571) 272-4200.

Sherry D. Brinkley
Petitions Examiner
Office of Petitions

UNITED STATES PATENT AND TRADEMARK OFFICE

Commissioner for Patents
United States Patent and Trademark Office
P.O. Box 1450
Alexandria, VA 22313-1450
www.uspto.gov

Thompson E. Fehr
Suite 300
Goldenwest Corporate Center
5025 Adams Avenue
Ogden UT 84403

COPY MAILED

MAY 09 2008

OFFICE OF PETITIONS

In re Application of

JoAnn Parker :

Application No. 29/258,059

: DECISION ON PETITION

Filed: April 13, 2006

:

Attorney Docket No. PPARKJ-GCB

This is a decision on the petition under 37 CFR 1.137(b), filed December 17, 2007, to revive the above-identified application.

The petition is **GRANTED**.

The application became abandoned on July 3, 2006, for failure to respond to the Notice to File Missing Parts of Non-provisional Application mailed May 2, 2006.

The petition satisfies the requirements of 37 CFR 1.137(b) in that petitioner has supplied (1) the reply in the form of an declaration under 37 CFR 1.63 and payment of the surcharge; (2) the petition fee of $1540.00; (3) an adequate statement of unintentional delay, and 4) a terminal disclaimer and requisite fee.

Telephone inquiries concerning this decision should be directed to the undersigned at (571) 272-3222.

The application file is being directed to the Office of Patent Application Processing further processing.

Kenya A. McLaughlin
Petitions Attorney
Office of Petitions

UNITED STATES PATENT AND TRADEMARK OFFICE

Commissioner for Patents
United States Patent and Trademark Office
P.O. Box 1450
Alexandria, VA 22313-1450
www.uspto.gov

Thompson E. Fehr
Goldenwest Corporate Center
5025 Adams Avenue, Suite 300
Ogden, UT 84403

COPY MAILED

APR 22 2009

OFFICE OF PETITIONS

In re Application of :
JoAnn **PARKER** :
Application No. 29/258,059 :
Filed: April 13, 2006 :
Attorney Docket No. **PPARKJ-GCB** :

DECISION ON PETITION
UNDER 37 CFR 1.137(b)

This is a decision on the petition under the unintentional provisions of 37 CFR 1.137(b), filed February 23, 2009, to revive the above-identified application.

The petition is **GRANTED**.

This application became abandoned for failure to timely pay the issue fee on or before December 4, 2008, as required by the Notice of Allowance and Fee(s) Due, mailed September 4, 2008. Accordingly, the date of abandonment of this application is December 5, 2008.

The petition satisfies the requirements of 37 CFR 1.137(b) in that petitioner has supplied (1) the reply in the form payment of the issue fee of $430, a terminal disclaimer and fee of $70, (2) the petition fee of $810; and (3) an adequate statement of unintentional delay.

The terminal disclaimer filed February 23, 2009 has been entered and made of record. Any continuing application filed from this application must contain a copy of the terminal disclaimer. The copy of the terminal disclaimer must be filed with a cover letter requesting the terminal disclaimer be recorded on the continuing application. A copy of this decision should be attached to the cover letter.

Telephone inquiries concerning this decision should be directed to Monica A. Graves at (571) 272-7253.

This application is being referred to the Office of Data Management for processing into a patent.

Brian W. Brown
Petitions Examiner
Office of Petitions

UNITED STATES PATENT AND TRADEMARK OFFICE

Commissioner for Patents
United States Patent and Trademark Office
P.O. Box 1450
Alexandria, VA 22313-1450
www.uspto.gov

WILFRED HOLNESS
4400 WICKHAM AVE., STE. 4A
BRONX NY 10466

COPY MAILED

DEC 0 9 2008

OFFICE OF PETITIONS

In re Application of	:	
Javaughn McDaniel	:	
Application No. 29/258,145	:	DECISION ON PETITION
Filed: April 14, 2006	:	
Attorney Docket No. JMD101	:	

This is a decision on the petition under the unintentional provisions of 37 CFR 1.137(b), filed November 5, 2008, to revive the above-identified application.

The petition is **GRANTED**.

This application became abandoned for failure to timely pay the issue fee on or before March 4, 2008, as required by the Notice of Allowance and Fee(s) Due mailed December 4, 2007. Accordingly, the date of abandonment of this application is March 5, 2008. A Notice of Abandonment was mailed March 31, 2008.

The petition satisfies the requirements of 37 CFR 1.137(b) in that petitioner has supplied (1) the reply in the form of payment of the issue fee of $430.00 ; (2) the petition fee of $810.00; (3) a proper statement of unintentional delay; and (4)) a terminal disclaimer and fee of $70.00 as required by 37 CFR 1.137(d).

The address given on the petition differs from the new address of record. A courtesy copy of this decision is being mailed to the address given on the petition; however, the Office will mail all future correspondence solely to the address of record.

Telephone inquiries concerning this decision should be directed to Joan Olszewski at (571) 272-7751.

This application is being referred to the Office of Data Management for processing into a patent.

/Liana Walsh/
Liana Walsh
Petitions Examiner
Office of Petitions

cc: Javaughn McDaniel
320 St. Nicholas Ave. 3B Apt.
NY NY 10027

PTO/SB/27 (09-04)
Approved for use through 07/31/06. OMB 0651-0031
U.S. Patent and Trademark Office; U.S. DEPARTMENT OF COMMERCE
Under the paperwork Reduction ACT of 1995, no persons are required to respond to collection of information unless it displays a valid OMB control number

113000 U.S. PTO
29/258148
041706

REQUEST FOR EXPEDITED EXAMINATION OF A DESIGN APPLICATION (37 CFR 1.155)	Application Number	Not Yet Assigned
	Filing Date	4/17/06
	First Named Inventor	Richard Schmelzer, et al.
	Title	Shoe Accessory
	Atty. Docket Number	SCHM-007/00US

ADDRESS TO:

MAIL STOP EXPEDITED DESIGN
COMMISSIONER FOR PATENTS
P.O. BOX 1450
ALEXANDRIA, VA 22313-1450

Approved
Jacqueline M. Stone
Jacqueline M. Stone, Director
Technology Center 1700/2900

This is a request for expedited examination of a design application under 37 CFR 1.155.

NOTE: If the Request made by this form accompanies original application papers, include form PTO/SB/18 "Design Patent Application Transmittal" or its equivalent.

A preexamination search was conducted. The field of search was:

Design Class 2, Subclass 796; Design Class 8, Subclasses 394, 395, 946, and 947; (Utility) Class 24, Subclasses 101R and 578.13; and (Utility) Class 36, Subclasses 136-139. Examiner Kavanaugh of Class 36 and Examiner Simone of Class D2 were consulted concerning the field of search.

Related applications: U.S. Design Patent Application No. (unassigned), Atty. Docket No. SCHM-005/00US, "Shoe Accessory," filed herewith; and U.S. Design Patent Application No. (unassigned), Atty. Docket No. SCHM-006/00US, "Shoe Accessory," filed herewith.

If not previously filed for the above-identified application, the following items required by 37 CFR 1.155 are enclosed:

- Formal drawings (see 37 CFR 1.84)
- The fee set forth in 37 CFR 1.17(k)
- An information disclosure statement in compliance with 37 CFR 1.98

Thomas M. Croft
Signature

4/12/06
Date

Thomas M. Croft
Typed or printed name

44,051
Registration Number

(720) 566-4044
Telephone Number

WARNING: Information on this form may become public. Credit card information should not be included on this form. Provide credit card information and authorization on PTO-2839.

This collection of information is required by CFR 1.155. The information is required to obtain or retain a benefit by the public which is to file (and by the USPTO to process) an application. Confidentiality is governed by 35 U.S.C. 122 and 37 CFR 1.11 and 1.4. This collection is estimated to take 6 minutes to complete, including gathering, and submitting the completed application form to the USPTO. Time will vary depending upon the individual case. Any comments on the amount of time you require to complete this form and/or suggestions for reducing this burden, should be sent to the Chief Information Officer, U.S. Patent and Trademark Office, U.S. Department of Commerce, P.O. Box 1450, Alexandria, VA 22313-1450. DO NOT SEND FEES OR COMPLETED FORMS TO THIS ADDRESS. SEND TO: Commissioner for Patents, P.O. Box 1450, Alexandria, VA 22313-1450.

04/20/2006 MBELETE1 00000002 501283 29258148
01 FC:1802 900.00 DA
248862 v1/CO

UNITED STATES PATENT AND TRADEMARK OFFICE

Commissioner for Patents
United States Patent and Trademark Office
P.O. Box 1450
Alexandria, VA 22313-1450
www.uspto.gov

COPY MAILED

MAY 07 2007

OFFICE OF PETITIONS

COOLEY GODWARD KRONISH LLP
ATTN: PATENT GROUP
SUITE 500
1200 - 19TH STREET, NW
WASHINGTON DC 20036-2402

In re Application of	:	
SCHMELZER, Richard et al.	:	
Application No. 29/258,148	:	DECISION ON PETITION
Filed: April 17, 2006	:	TO WITHDRAW
Attorney Docket No. **SCHM-007/00US**	:	FROM RECORD
	:	

This is a decision on the Request to Withdraw as attorney or agent of record under 37 C.F.R. § 1.36(b), filed January 30, 2007.

The request is **NOT APPROVED** as moot.

A review of the file record indicates that the power of attorney to COOLEY GODWARD KRONISH LLP has been revoked by the assignee of the patent application on March 06, 2007. Accordingly, the request to withdraw under 37 C.F.R. § 1.36(b) is moot.

All future communications from the Office will continue to be directed to the below-listed address until otherwise notified by applicant.

Telephone inquires concerning this decision should be directed to Tredelle Jackson at 571-272- 2783.

Monica A. Graves
Petitions Examiner
Office of Petitions

cc: **FAEGRE & BENSON LLP**
PATENT DOCKETING
2200 WELLS FARGO CENTER
90 SOUTH SEVENTH STREET
MINNEAPOLIS, MN 55402-3901

UNITED STATES PATENT AND TRADEMARK OFFICE

COMMISSIONER FOR PATENTS
UNITED STATES PATENT AND TRADEMARK OFFICE
P.O. BOX 1450
ALEXANDRIA, VA 22313-1450
www.uspto.gov

MICHAEL BEST & FRIEDRICH, LLP
100 E WISCONSIN AVENUE
MILWAUKEE, WI 53202

COPY MAILED

AUG 16 2006

OFFICE OF PETITIONS

In re Application of	:	
Nheeda Enriquez	:	
Application No. 29/258,188	:	
Filed: April 18, 2006	:	ON PETITION
Attorney Docket Number:	:	
091393-9245-00	:	

This is a decision on the Petition regarding Notice of Omitted Items in a Nonprovisional Application, filed June 19, 2006, requesting the above-identified application be accorded a filing date of April 18, 2006, including drawing Figures 15-17 described in the specification.

The application was filed on April 18, 2006. On May 10, 2006, the Office of Initial Patent Examination mailed a Notice of Omitted Item(s) in a Nonprovisional Application (hereinafter "Notice") stating that the application had been accorded a filing date; however, Figures 15-17 described in the specification appeared to have been omitted from the application.

Applicant responds with the instant petition wherein Applicant avers that drawing Figures 15-17 described in the specification were included among 12 sheets of drawings originally filed with the application on April 18, 2006, and were received by this Office as evidenced by the return-receipt postcard. In support of this assertion, Applicant provides a copy of a return-receipt postcard, acknowledging receipt of, *inter alia*, 12 sheets of formal drawings in the above-identified application by this Office on April 18, 2006. Applicant has also re-filed figures 15-17 with the instant petition.

"A postcard receipt which itemizes and properly identifies the papers which are being filed serves as prima facie evidence of receipt in the PTO of all items listed thereon by the PTO." MPEP § 503.

Accordingly, the petition is granted.

The copy of drawing Figures 15-17 filed with the instant petition will be used for examination purposes.

No petition fee has been charged and none is due.

The application will be returned to the Office of Initial Patent Examination for further processing with a filing date of April 18, 2006, and an indication that 12 sheets of drawings were present on filing, including Figures 15-17, using drawing Figures 15-17 filed with the instant petition on June 19, 2006.

Telephone inquiries concerning this matter should be directed to the undersigned at (571) 272-3232.

Derek L. Woods
Attorney
Office of Petitions

SPE: I. Simmons

SPE RESPONSE FOR CERTIFICATE OF CORRECTION

Paper No.: _____

DATE : 5/5/07

TO SPE OF : ART UNIT 2916

SUBJECT : Request for Certificate of Correction for Appl. No.: 29/258,194 Patent No.: D538109

Please respond to this request for a certificate of correction within 7 days.

Please review the requested changes/corrections as shown in the COCIN document(s) in the IFW application image. No new matter should be introduced, nor should the scope or meaning of the claims be changed.

Please complete the response (see below) and forward the completed response to scanning using document code **COCX**.

Lamonte M. Newsome
Certificates of Correction Branch
703-308-9390 ext. 112

Thank You For Your Assistance

The request for issuing the above-identified correction(s) is hereby:

Note your decision on the appropriate box.

- [x] **Approved** — All changes apply.
- [ ] **Approved in Part** — Specify below which changes **do not** apply.
- [ ] **Denied** — State the reasons for denial below.

Comments: _____

IAN SIMMONS
SUPERVISORY PATENT EXAMINER

SPE

2916
Art Unit

UNITED STATES PATENT AND TRADEMARK OFFICE

Commissioner for Patents
United States Patent and Trademark Office
P.O. Box 1450
Alexandria, VA 22313-1450
www.uspto.gov

QUARLES & BRADY LLP
411 E. WISCONSIN AVENUE
SUITE 2040
MILWAUKEE WI 53202-4497

COPY MAILED

DEC 0 5 2006

OFFICE OF PETITIONS

In re Application of
James M. Piatt
Application No. 29/258,200
Filed: April 18, 2006
Attorney Docket No. 550299.00407

ON PETITION

This is in response to the petition under 37 CFR 1.47(b) filed November 14, 2006.

The petition is **DISMISSED**.

Rule 47 applicant is given TWO MONTHS from the mailing date of this decision to respond, correcting the below-noted deficiencies. Any response should be entitled "Request for Reconsideration of Petition Under 37 CFR 1.47(b)" and may include an oath or declaration executed by the inventor. **Failure to respond will result in abandonment of the application.** Any extensions of time will be governed by 37 CFR 1.136(a).

Upon application, petitioners submitted an unsigned oath or declaration naming sole inventor James M. Piatt. A Notice to File Missing Parts was sent on May 11, 2006. In response thereof, the instant petition and four month extension of time request dated November 10, 2006 were filed. The instant petition, seeks status under 37 CFR 1.47(b) claiming that Mr. Piatt refuses to execute the oath or declaration and to cooperate with the filing of the instant application.

A grantable petition under 37 CFR 1.47(b) requires:

(1) proof that the non-signing inventor cannot be reached or refuses to sign the oath or declaration after having been presented with the application papers (specification, claims and drawings);

(2) an acceptable oath or declaration in compliance with 35 U.S.C. §§ 115 and 116;

(3) the petition fee;

(4) a statement of the last known address of the non-signing inventor;

(5) proof of proprietary interest, and

(6) proof of irreparable damage.

This petition lacks compliance with item (1).

Pursuant to 37 CFR 1.63:

> (d)(1) A newly executed oath or declaration is not required under § 1.51(b)(2) and § 1.53(f) in a continuation or divisional application provided that:

(i) The prior nonprovisional application contained an oath or declaration as prescribed by paragraphs (a) through (c) of this section;

(ii) The continuation or divisional application was filed by all or by fewer than all of the inventors named in the prior application;

(iii) The specification and drawings filed in the continuation or divisional application contain no matter that would have been new matter in the prior application; and

(iv) A copy of the executed oath or declaration submitted under this paragraph for a continuation or divisional application must be accompanied by a statement requesting the deletion of the name or names of the person or persons who are not inventors in the continuation or divisional application.

With respect to item (1), petitioner has not provided sufficient proof that a copy of the instant application (specification including claims, drawings, if any, and the Declaration) was sent or given to the non-signing inventor.[1]

Before a refusal can be alleged, petitioners must demonstrate that the non-signing inventor was sent or given a copy of the application papers. Petitioners must provide proof that the inventor refused to sign the declaration after being sent or given a copy of the application papers. If there is a written refusal, petitioners must provide a copy thereof with any renewed petition. If the refusal was made orally to a person, then that person must provide details of the refusal in an affidavit or declaration of facts.

Petitioner should submit a copy of the cover letter transmitting the application papers for the instant application to the non-signing inventor or details given in an affidavit or declaration of facts by a person with first-hand knowledge of the details.

Further correspondence with respect to this matter should be addressed as follows:

By mail: Mail Stop Petition
Commissioner for Patents
P.O. Box 1450
Alexandria, VA 22313-1450

By FAX: (571) 273-8300
Office of Petitions

Telephone inquiries concerning this matter may be directed to the undersigned Petitions Attorney at (517) 272-3212.

Patricia Faison-Ball

Patricia Faison-Ball
Senior Petitions Attorney
Office of Petitions

---

[1] MPEP 409.03(d).

UNITED STATES PATENT AND TRADEMARK OFFICE

Commissioner for Patents
United States Patent and Trademark Office
P.O. Box 1450
Alexandria, VA22313-1450
www.uspto.gov

QUARLES & BRADY LLP
411 E. WISCONSIN AVENUE
SUITE 2040
MILWAUKEE WI 53202-4497

COPY MAILED

OCT 11 2007

OFFICE OF PETITIONS

In re Application of
James M. Piatt
Application No. 29/258,200
Filed: April 18, 2006
Attorney Docket No. 550299.00407

ON PETITION

This is in response to the request for reconsideration filed June 4, 2007 under 37 CFR 1.47(b).

The petition is **DISMISSED**.

Rule 47 applicant is given TWO MONTHS from the mailing date of this decision to respond, correcting the below-noted deficiencies. Any response should be entitled "Request for Reconsideration of Petition Under 37 CFR 1.47(b)" and may include an oath or declaration executed by the inventor. **Failure to respond will result in abandonment of the application.** Any extensions of time will be governed by 37 CFR 1.136(a).

Upon application, petitioners submitted an unsigned oath or declaration naming sole inventor James M. Piatt. A Notice to File Missing Parts was sent on May 11, 2006. In response thereof, on November 14, 2006 a petition and four month extension of time request, dated November 10, 2006, were filed seeking status under 37 CFR 1.47(b) claiming that Mr. Piatt refused to execute the oath or declaration and to cooperate with the filing of the instant application. The petition was dismissed in a decision mailed December 5, 2006 because it had not been shown that a complete application had been sent or given to the non-signing inventor.[1]

A grantable petition under 37 CFR 1.47(b) requires:

(1) proof that the non-signing inventor cannot be reached or refuses to sign the oath or declaration after having been presented with the application papers (specification, claims and drawings);

(2) an acceptable oath or declaration in compliance with 35 U.S.C. §§ 115 and 116;

[1] MPEP 409.03(d).

(3) the petition fee;
(4) a statement of the last known address of the non-signing inventor;
(5) proof of proprietary interest, and
(6) proof of irreparable damage.

Comes now petitioner with the instant petition, four month extension of time and proof that the application was mailed, via United Parcel Service (UPS) but undeliverable as the address used was a P.O. Box. The additional proof presented shows that an email address for Mr. Piatt was secured. However, while it has been shown that the complete application was sent to an email address believed to be that of Mr. Piatt, it hasn't been established that Mr. Piatt actually received the email. In the absence of an express statement from a non-signing inventor that they have received, opened and read a document, unlike a printed page in the language of the recipient there is no basis to presume that an emailed document was in a form comprehended.

The petition still lacks item (1) above.

Before a refusal can be alleged, petitioners must demonstrate that the non-signing inventor was sent or given a copy of the application papers. Petitioners must provide proof that the inventor refused to sign the declaration after being sent or given a copy of the application papers. If there is a written refusal, petitioners must provide a copy thereof with any renewed petition. If the refusal was made orally to a person, then that person must provide details of the refusal in an affidavit or declaration of facts.

Petitioner should submit a copy of the cover letter transmitting the application papers for the instant application to the non-signing inventor or details given in an affidavit or declaration of facts by a person with first-hand knowledge of the details.

It should be noted also that while the oath or declaration provided shows a Sheboygan, WI address for the non-signing inventor, petitioners are maintaining that the last known address is in Glendale, CA. We would advise that petitioners exercise more diligence in determining what the correct address is for Mr. Piatt and that a copy of the complete application be forwarded to him at that address.

Petitioners must provide details, in an affidavit or declaration of facts by a person with first hand knowledge of the details, of the additional efforts to locate Mr. Piatt, such as Internet, e-mail, or telephone directory searches, which have been undertaken to locate him, send or give a copy of the application papers to him, and request that he sign and return the declaration. If repeated attempts to contact the non-signing inventor by telephone, mail, and e-mail, are unsuccessful, petitioners will have established that he cannot be found despite diligent efforts.

At the very least petitioners should start with the Sheboygan, WI address.

If after a copy of the complete application has been sent to Mr. Piatt and he refuses in writing to sign the declaration, petitioners should provide a copy of that written refusal with any renewed petition. If after a copy of the complete application has been sent to Mr. Piatt and he verbally refuses, details should be given in an affidavit or declaration of facts by a person having first hand knowledge of the facts of refusal.

Finally, if it is found that Mr. Piatt is residing at a different address than that listed in the initial petition, petitioners should provide a new statement of the last known address in a renewed petition as well as a corrected oath or declaration with a proper last known address including the country of citizenship if appropriate.

Further correspondence with respect to this matter should be addressed as follows:

By mail: Mail Stop Petition
Commissioner for Patents
P.O. Box 1450
Alexandria, VA 22313-1450

By FAX: (571) 273-8300
Office of Petitions

Telephone inquiries concerning this matter may be directed to the undersigned Petitions Attorney at (517) 272-3212.

Patricia Faison-Ball

Patricia Faison-Ball
Senior Petitions Attorney
Office of Petitions

UNITED STATES PATENT AND TRADEMARK OFFICE

Commissioner for Patents
United States Patent and Trademark Office
P.O. Box 1450
Alexandria, VA22313-1450
www.uspto.gov

QUARLES & BRADY LLP
411 E. WISCONSIN AVENUE
SUITE 2040
MILWAUKEE WI 53202-4497

COPY MAILED

DEC 17 2007

OFFICE OF PETITIONS

In re Application of
James M. Piatt
Application No. 29/258,200
Filed: April 18, 2006
Attorney Docket No. 550299.00407

: DECISION NOTING JOINDER OF
: INVENTOR AND PETITION UNDER
: **37 CFR 1.47(b) DISMISSED** AS
: INVOLVING MOOT ISSUES

A petition under 37 CFR 1.47(b) was filed November 14, 2006 and was dismissed in a decision mailed December 5, 2005. A request for reconsideration filed June 4, 2007 was also dismissed in a decision mailed October 11, 2007.

Papers filed December 6, 2007 in reply to the "Decision Refusing Status Under 37 CFR 1.47(b)" mailed October 11, 2007, include a declaration signed by James M. Piatt, the sole inventor, and in compliance with 37 CFR 1.63.

In view of the joinder of the previously non-signing sole inventor, further consideration under 37 CFR 1.47(b) is unnecessary.

The renewed petition filed December 6, 2007 is **DISMISSED** as involving moot issues.

This application does not have any rule 1.47(b) status and no such status should appear on the file wrapper. This application need not be returned to this office for any further consideration under 37 CFR 1.47(b).

This matter will be referred to the Office of Patent Application Processing for further pre-examination processing.

Telephone inquiries related to this decision should be directed to the undersigned Petitions Attorney at (571) 272-3212.

Patricia Faison-Ball

Patricia Faison-Ball
Senior Petitions Attorney
Office of Petitions

UNITED STATES PATENT AND TRADEMARK OFFICE

Commissioner for Patents
United States Patent and Trademark Office
P.O. Box 1450
Alexandria, VA 22313-1450
www.uspto.gov

GOTTLIEB RACKMAN & REISMAN PC
270 MADISON AVENUE
8TH FLOOR
NEW YORK NY 10016-0601

COPY MAILED
AUG 11 2008

In re Application of	:	
So, Shun Tong	:	
Application No. 29/258,237	:	ON PETITION
Filed: April 19, 2006	:	
Attorney Docket No. 6419-021	:	

This is a decision on the petition under 37 C.F.R. § 1.137(b), filed June 26, 2008 (supplemental petition submitted on July 30, 2008), to revive the above-identified application.

The petition is **GRANTED**.

The petition satisfies the requirements of 37 CFR 1.137(b) in that petitioner has supplied (1) the reply in the form of an Amendment, (2) the petition fee, (3) a proper statement of unintentional delay and (4) a terminal disclaimer.

Telephone inquiries concerning this decision should be directed to the undersigned at (571) 272-3206.

This matter is being referred to Technology Center 2912 for further examination on the merits.

Liana Walsh
Petitions Examiner
Office of Petitions

UNITED STATES PATENT AND TRADEMARK OFFICE

Commissioner for Patents
United States Patent and Trademark Office
P.O. Box 1450
Alexandria, VA 22313-1450
www.uspto.gov

GOTTLIEB RACKMAN & REISMAN PC
270 MADISON AVENUE
8TH FLOOR
NEW YORK NY 10016-0601

COPY MAILED

SEP 1 0 2008

OFFICE OF PETITIONS

In re Application of	:	
So, Shun Tong	:	
Application No. 29/258,239	:	ON PETITION
Filed: April 19, 2006	:	
Attorney Docket No. 6419-018	:	

This is a decision on the petition under 37 C.F.R. § 1.137(b), filed July 9, 2008, to revive the above-identified application.

The petition is **DISMISSED**.

Any request for reconsideration must be submitted within TWO (2) MONTHS from the mail date of this decision. No further petition fee is required for the request. Extensions of time under 37 CFR 1.136(a) are permitted. The reconsideration request should include a cover letter entitled "Renewed Petition under 37 CFR 1.137(b)." This is **not** a final agency action within the meaning of 5 U.S.C. § 704.

A grantable petition under 37 CFR 1.137(b) must be accompanied by:
(1) the required reply,[1]
(2) the petition fee,
(3) a statement that the entire delay in filing the required reply from the due date for the reply until the filing of a grantable petition pursuant to 37 CFR 1.137(b) was unintentional, and
(4) a terminal disclaimer and fee if the application was filed on or before June 8, 1995 or if the application is a design application.

Where there is a question as to whether either the abandonment or the delay in filing a petition under 37 CFR 1.137 was unintentional, the Commissioner may require additional information.[2]

The instant petition lacks item(s) (4). Since the instant application is a design application, a terminal disclaimer (and fee) is required for revival under 37 CFR 1.137(b). A blank form is enclosed for petitioner's convenience.

---

[1] In a nonprovisional application abandoned for failure to prosecute, the required reply may be met by the filing of a continuing application. In an application or patent, abandoned or lapsed for failure to pay the issue fee or any portion thereof, the required reply must be the payment of the issue fee or any outstanding balance thereof.

[2] See MPEP 711.03(c)(III)(C) and (D).

Further correspondence with respect to this matter should be addressed as follows:

By mail: Mail Stop PETITIONS
Commissioner for Patents
Post Office Box 1450
Alexandria, VA 22313-1450

By hand: Customer Window located at:

U.S. Patent and Trademark Office
Customer Service Window Randolph Building
401 Dulany Street
Alexandria, VA 22314

By fax: (571) 273-8300
ATTN: Office of Petitions

Any questions concerning this matter may be directed to the undersigned at (571) 272-3206.

Liana Walsh
Petitions Examiner
Office of Petitions

UNITED STATES PATENT AND TRADEMARK OFFICE

Commissioner for Patents
United States Patent and Trademark Office
P.O. Box 1450
Alexandria, VA 22313-1450
www.uspto.gov

GOTTLIEB RACKMAN & REISMAN PC
270 MADISON AVENUE
8TH FLOOR
NEW YORK NY 10016-0601

COPY MAILED

MAR 05 2009

OFFICE OF PETITIONS

In re Application of	:	
So, Shun Tong	:	
Application No. 29/258,239	:	ON PETITION
Filed: April 19, 2006	:	
Attorney Docket No. 6419-018	:	

This is a decision on the renewed petition under 37 C.F.R. § 1.137(b), filed September 26, 2008, to revive the above-identified application.

The petition is **GRANTED**.

With the submission of a terminal disclaimer (and fee), the petition now satisfies all requirements of 37 CFR 1.137(b).

Telephone inquiries concerning this decision should be directed to the undersigned at (571) 272-3206.

This matter is being referred to the Office of Data Management for processing into a patent.

Liana Walsh
Petitions Examiner
Office of Petitions

UNITED STATES PATENT AND TRADEMARK OFFICE

COMMISSIONER FOR PATENTS
UNITED STATES PATENT AND TRADEMARK OFFICE
P.O. BOX 1450
ALEXANDRIA, VA 22313-1450
www.uspto.gov

FOLEY & LARDNER LLP
321 NORTH CLARK STREET
SUITE 2800
CHICAGO IL 60610-4764

COPY MAILED
MAY 21 2007
OFFICE OF PETITIONS

In re Application of :
Russo, et al. :
Application No. 29/258,246 : ON PETITION
Deposited: April 18, 2006 :
Attorney Docket No. 031890-1888 :
For: WIRE WINDER

This is a decision on the petition, filed September 21, 2006 (certificate of mailing date September 18, 2006), requesting, in effect, withdrawal of the Notice of Incomplete Nonprovisional Application (Notice), mailed August 17, 2006.

The petition under 37 CFR 1.53(e) is **GRANTED**.

The application was deposited on April 18, 2006. On August 17, 2006, the Office of Initial Patent Examination mailed a Notice informing applicants that the application had not been accorded a filing date because the specification appeared to have been omitted.

In response to the Notice, petitioners timely filed the present petition. Petitioners request that the application be accorded a filing date of April 18, 2006 on the basis that a specification, including a claim, was received in the Patent and Trademark Office (PTO) on April 18, 2006.

In support, the petition is accompanied by a copy of applicants' itemized postcard receipt showing an Office of Initial Patent Examination generated barcode citing April 18, 2006 as the date of receipt. The postcard lists that the filing included, *inter alia*, 2 pages of specification.

The return postcard constitutes *prima facie* evidence that 2 pages of specification were filed on April 18, 2006. MPEP 503. Accordingly, the request is granted.

Pursuant to petitioners' authorization, the $400.00 fee submitted with the instant petition will be credited to deposit account no. 06-1450.

The application is being returned to Office of Initial Patent Examination for further processing, with a filing date of **April 18, 2006,** using the copy of the two page specification re-submitted with the petition.

Any inquiries pertaining to this matter may be directed to the undersigned at (571) 272-3230.

Shirene Willis Brantley

Shirene Willis Brantley
Senior Petitions Attorney
Office of Petitions

UNITED STATES PATENT AND TRADEMARK OFFICE

Commissioner for Patents
United States Patent and Trademark Office
P.O. Box 1450
Alexandria, VA 22313-1450
www.uspto.gov

CROWELL & MORING LLP
INTELLECTUAL PROPERTY GROUP
P.O. BOX 14300
WASHINGTON DC 20044-4300

COPY MAILED

FEB 23 2007

OFFICE OF PETITIONS

In re Application of	:	
Jan Hettler	:	
Application No. 29/258,275	:	ON PETITION
Filed: April 20, 2006	:	
Attorney Docket No. 080437.23525US	:	

This is a decision on the petition, filed February 22, 2007, under 37 CFR 1.313(c)(3) to withdraw the above-identified application from issue after payment of the issue fee.

The petition is **GRANTED**.

The above-identified application is withdrawn from issue in favor of a continued prosecution application (CPA) under 37 CFR 1.53(d).

Petitioner is advised that the issue fee paid on January 24, 2007 in the parent application is not refundable nor can it be applied towards any new Notice of Allowance which may issue on the CPA filed February 22, 2007.

Telephone inquiries should be directed to the undersigned at (571) 272-3208.

This matter is being referred to Technology Center AU 2913 for processing of the CPA.

Karen Creasy

Karen Creasy
Petitions Examiner
Office of Petitions

13049 U.S. PTO
042006

PTO/SB/27 (09-04)
Approved for use through 07/31/2006. OMB 0651-0031
U.S. Patent and Trademark Office; U.S DEPARTMENT OF COMMERCE
Under the Paperwork Reduction ACT of 1995, no persons are required to respond to collection of information unless it displays a valid OMB control number.

113000 U.S. PTO
29/258310
042006

REQUEST FOR EXPEDITED EXAMINATION OF A DESIGN APPLICATION (37 CFR 1.155)

Application Number	not yet assigned
Filing Date	herewith
First Named Inventor	DAYAN
Title	MODULATOR
Atty Docket Number	INT245 223966C1

ADDRESS TO:

MAIL STOP EXPEDITED DESIGN
COMMISSIONER FOR PATENTS
P.O. Box 1450
Alexandria, VA 22313-1450

EV479733791US

This is a request for expedited examination of a design application under 37 CFR 1.155.

NOTE: If the Request made by this form accompanies original application papers, include form PTO/SB/18 "Design Patent Application Transmittal" or its equivalent.

A preexamination search was conducted. The field of search was:

Class D13, Subclass 144; Class D13, Subclass 168 and "transmitter"; Class D13, Subclass 144 and Sublass 168; Class D14, Subclass 155 and Class D13, Subclass 144; Class D14, Subclass 155.

Related applications: 29/233,604

If not previously filed for the above-identified application, the following items required by 37 CFR 1.155 are enclosed:

- Formal drawings (see 37 CFR 1.84).
- The fee set forth in 37 CFR 1.17(k).
- An information disclosure statement in compliance with 37 CFR 1.98.

Approved 5-16-06
Jacqueline M. Stone
Jacqueline M. Stone, Director
Technology Center 1700/2900

/24/2006 SSITHIB1 00000070 29258310
FC:1802 900.00 OP

Brian L. Belles — Signature

4/20/06 — Date

Brian L. Belles — Typed or printed name

51,322 — Registration Number, if applicable

215 977-2127 — Telephone Number

WARNING: Information on this form may become public. Credit card information should not be included on this form. Provide credit card information and authorization on PTO-2038.

This collection of information is required by 37 CFR 1.155. The information is required to obtain or retain a benefit by the public which is to file (and by the USPTO to process) an application. Confidentiality is governed by 35 U.S.C. 122 and 37 CFR 1.11 and 1.14. This collection is estimated to take 6 minutes to complete, including gathering, preparing, and submitting the completed application form to the USPTO. Time will vary depending upon the individual case. Any comments on the amount of time you require to complete this form and/or suggestions for reducing this burden, should be sent to the Chief Information Officer, U.S. Patent and Trademark Office, U.S. Department of Commerce, P.O. Box 1450, Alexandria, VA 22313-1450. DO NOT SEND FEES OR COMPLETED FORMS TO THIS ADDRESS. SEND TO: Commissioner for Patents, P.O. Box 1450, Alexandria, VA 22313-1450.

If you need assistance in completing the form, call 1-800-PTO-9199 and select option 2.

PTO/SB/27 (05-03)
Approved for use through 04/30/2003. OMB 0651-0031
U.S. Patent and Trademark Office; U.S. DEPARTMENT OF COMMERCE
Under the Paperwork Reduction Act of 1995, no persons are required to respond to a collection of information unless it displays a valid OMB control number.

REQUEST FOR EXPEDITED EXAMINATION OF A DESIGN APPLICATION (37 CFR 1.155)

Application Number	TBD
Filing Date	April 21, 2006
First Named Inventor	Shane S. Kohastu et al.
Title	Portion Of A Shoe Upper
Atty Docket Number	015127.00688

113000 U.S. PTO
29/258311
042106

HAND DELIVER TO THE DESIGN GROUP DIRECTOR'S OFFICE
-or- ADDRESS TO:
MAIL STOP EXPEDITED DESIGN
COMMISSIONER FOR PATENTS
P.O. Box 1450
Alexandria, VA 22313-1450

This is a request for expedited examination of a design application under 37 CFR 1.155.

NOTE: If the Request made by this form accompanies original application papers, include form PTO/SB/18 "Design Patent Application Transmittal" or its equivalent.

A preexamination search was conducted. The field of search was:

D2/896, 902, 907, 908, 943, 944, 945, 946, 969, 972, 943 and 974

Related applications: _____

If not previously filed for the above-identified application, the following items required by 37 CFR 1.155 are enclosed:

Formal drawings (see 37 CFR 1.84).

The fee set forth in 37 CFR 1.17(k).

An information disclosure statement in compliance with 37 CFR 1.98.

5-16-06
Approved
Jacqueline M. Stone
Jacqueline M. Stone, Director
Technology Center 1700/2900

April 21, 2006
Date

Signature

202-824-3000
Telephone Number

Darrell G .Mottley, 42,912
Typed or printed name

WARNING: Information on this form may become public. Credit card information should not be included on this form. Provide credit card information and authorization on PTO-2038.

This collection of information is required by 37 CFR 1.155. The information is required to obtain or retain a benefit by the public which is to file (and by the USPTO to process) an application. Confidentiality is governed by 35 U.S.C. 122 and 37 CFR 1.14. This collection is estimated to take 6 minutes to complete, including gathering, preparing, and submitting the completed application form to the USPTO. Time will vary depending upon the individual case. Any comments on the amount of time you require to complete this form and/or suggestions for reducing this burden, should be sent to the Chief Information Officer, U.S. Patent and Trademark Office, U.S. Department of Commerce, P.O. Box 1450, Alexandria, VA 22313-1450. DO NOT SEND FEES OR COMPLETED FORMS TO THIS ADDRESS. SEND TO: Mail Stop Expedited Design, Commissioner for Patents, P.O. Box 1450, Alexandria, VA 22313-1450.

If you need assistance in completing the form, call 1-800-PTO-9199 and select option 2.

04/24/2006 SSITHIB1 00000071 190733 29258311
01 FC:1802 900.00 DA

UNITED STATES PATENT AND TRADEMARK OFFICE

Commissioner for Patents
United States Patent and Trademark Office
P.O. Box 1450
Alexandria, VA 22313-1450
www.uspto.gov

BANNER & WITCOFF, LTD.
1100 13th STREET, N.W.
SUITE 1200
WASHINGTON DC 20005-4051

COPY MAILED

DEC 1 1 2007

OFFICE OF PETITIONS

In re Patent Number: D538027	:	
Issue Date: 03/13/2007	:	
Application No. 29/258311	:	LETTER DISMISSING PETITION
Filed: 04/21/2006	:	
Attorney Docket No. 015127.00688	:	

This is a decision in reference to the paper styled as a "PETITION UNDER 37 C.F.R. § 3.81(b) TO CORRECT ASSIGNEE'S NAME," filed on November 10, 2007.

The petition is **dismissed** for the reason stated below.

The request is not properly signed. In particular, the S-signature contained on the form does not comply with the regulations. 37 CFR 1.4(d)(2)(iii) states that the signer's name must be: (A) Presented in printed or typed form preferably immediately below or adjacent the S-signature, and (B) Reasonably specific enough so that the identity of the signer can be readily recognized. As no name is presented in printed or typed form immediately below or adjacent to the S-signature, the S-signature is improper.

A new, properly-signed request under 37 CFR 3.81(b) should be filed. No additional fees are due upon reconsideration.

Receipt of the processing fee and certificate of correction fee is acknowledged.

Further correspondence with respect to this matter should be addressed as follows:

By mail: Mail Stop Petition
Commissioner for Patents
P.O. Box 1450
Alexandria, VA 22313-1450

By FAX: (571) 273-8300
Attn: Office of Petitions

By hand: Customer Service Window
Mail Stop Petition
Randolph Building
401 Dulany Street
Alexandria, VA 22314

Inquiries concerning this decision should be directed to the undersigned at (571) 272-3231.

D Wood

Douglas I. Wood
Senior Petitions Attorney
Office of Petitions

PTO/SB/27 (05-03)
Approved for use through 04/30/2003. OMB 0651-0031
U.S. Patent and Trademark Office; U.S. DEPARTMENT OF COMMERCE
Under the Paperwork Reduction Act of 1995, no persons are required to respond to a collection of information unless it displays a valid OMB control number.

REQUEST FOR EXPEDITED EXAMINATION OF A DESIGN APPLICATION (37 CFR 1.155)

Application Number	TO BE ASSIGNED
Filing Date	April 21, 2006
First Named Inventor	Andrew G.V. Oldknow
Title	Portion Of A Golf Club Head
Atty Docket Number	015127.00708

13000 U.S. PTO
29/258312
042106

HAND DELIVER TO THE DESIGN GROUP DIRECTOR'S OFFICE
-or- ADDRESS TO:
MAIL STOP EXPEDITED DESIGN
COMMISSIONER FOR PATENTS
P.O. Box 1450
Alexandria, VA 22313-1450

This is a request for expedited examination of a design application under 37 CFR 1.155.

NOTE: If the Request made by this form accompanies original application papers, include form PTO/SB/18 "Design Patent Application Transmittal" or its equivalent.

A preexamination search was conducted. The field of search was:

Class D21/733, 747, 748, 749, 750, 751, 752, 753, 759;
Class 473/287, 290, 291, 324, 325, 326, 327, 328, 329, 330, 331, 349 and 350.

Related applications: _____

If not previously filed for the above-identified application, the following items required by 37 CFR 1.155 are enclosed:

Formal drawings (see 37 CFR 1.84).

The fee set forth in 37 CFR 1.17(k).

An information disclosure statement in compliance with 37 CFR 1.98.

5-16-06
Approved
Jacqueline M. Stone
Jacqueline M. Stone, Director
Technology Center 1700/2900

4/21/06
Date

Signature

202-824-3000
Telephone Number

David R. Gerk-Registration No. 56,901
Typed or printed name

WARNING: Information on this form may become public. Credit card information should not be included on this form. Provide credit card information and authorization on PTO-2038.

This collection of information is required by 37 CFR 1.155. The information is required to obtain or retain a benefit by the public which is to file (and by the USPTO to process) an application. Confidentiality is governed by 35 U.S.C. 122 and 37 CFR 1.14. This collection is estimated to take 6 minutes to complete, including gathering, preparing, and submitting the completed application form to the USPTO. Time will vary depending upon the individual case. Any comments on the amount of time you require to complete this form and/or suggestions for reducing this burden, should be sent to the Chief Information Officer, U.S. Patent and Trademark Office, U.S. Department of Commerce, P.O. Box 1450, Alexandria, VA 22313-1450. DO NOT SEND FEES OR COMPLETED FORMS TO THIS ADDRESS. SEND TO: Mail Stop Expedited Design, Commissioner for Patents, P.O. Box 1450, Alexandria, VA 22313-1450.

If you need assistance in completing the form, call 1-800-PTO-9199 and select option 2.

04/24/2006 SSITHIB1 00000078 190733 29258312
01 FC:1802 900.00 DA

PTO/SB/27 (05-03)
Approved for use through 04/30/2003. OMB 0651-0031
U.S. Patent and Trademark Office; U.S. DEPARTMENT OF COMMERCE
Under the Paperwork Reduction Act of 1995, no persons are required to respond to a collection of information unless it displays a valid OMB control number.

REQUEST FOR EXPEDITED EXAMINATION OF A DESIGN APPLICATION (37 CFR 1.155)

Application Number	TO BE ASSIGNED
Filing Date	April 21, 2006
First Named Inventor	Andrew G.V. Oldknow
Title	Portion Of A Golf Club Head
Atty Docket Number	015127.00707

HAND DELIVER TO THE DESIGN GROUP DIRECTOR'S OFFICE
-or- ADDRESS TO:
MAIL STOP EXPEDITED DESIGN
COMMISSIONER FOR PATENTS
P.O. Box 1450
Alexandria, VA 22313-1450

13000 U.S. PTO
29/258313
042106

This is a request for expedited examination of a design application under 37 CFR 1.155.

NOTE: If the Request made by this form accompanies original application papers, include form PTO/SB/18 "Design Patent Application Transmittal" or its equivalent.

A preexamination search was conducted. The field of search was:

Class D21/733, 747, 748, 749, 750, 751, 752, 753, 759;
Class 473/287, 290, 291, 324, 325, 326, 327, 328, 329, 330, 331, 349 and 350.

Related applications: This application is related to 015127.00706 (Portion of a Golf Club Head) being filed on even date herewith

If not previously filed for the above-identified application, the following items required by 37 CFR 1.155 are enclosed:

Formal drawings (see 37 CFR 1.84).

The fee set forth in 37 CFR 1.17(k).

An information disclosure statement in compliance with 37 CFR 1.98.

5-16-06
Approved
Jacqueline M. Stone
Jacqueline M. Stone, Director
Technology Center 1700/2900

4/21/06
Date

David R. Gerk
Signature

202-824-3000
Telephone Number

David R. Gerk-Registration No. 56,901
Typed or printed name

WARNING: Information on this form may become public. Credit card information should not be included on this form. Provide credit card information and authorization on PTO-2038.

This collection of information is required by 37 CFR 1.155. The information is required to obtain or retain a benefit by the public which is to file (and by the USPTO to process) an application. Confidentiality is governed by 35 U.S.C. 122 and 37 CFR 1.14. This collection is estimated to take 6 minutes to complete, including gathering, preparing, and submitting the completed application form to the USPTO. Time will vary depending upon the individual case. Any comments on the amount of time you require to complete this form and/or suggestions for reducing this burden, should be sent to the Chief Information Officer, U.S. Patent and Trademark Office, U.S. Department of Commerce, P.O. Box 1450, Alexandria, VA 22313-1450. DO NOT SEND FEES OR COMPLETED FORMS TO THIS ADDRESS. SEND TO: Mail Stop Expedited Design, Commissioner for Patents, P.O. Box 1450, Alexandria, VA 22313-1450.

04/24/2006 SSITHIB1 00000077 190733 29258313
01 FC:1802 900.00 DA

PTO/SB/27 (05-03)
Approved for use through 04/30/2003. OMB 0651-0031
U.S. Patent and Trademark Office; U.S. DEPARTMENT OF COMMERCE
Under the Paperwork Reduction Act of 1995, no persons are required to respond to a collection of information unless it displays a valid OMB control number.

REQUEST FOR EXPEDITED EXAMINATION OF A DESIGN APPLICATION (37 CFR 1.155)

Application Number	TO BE ASSIGNED
Filing Date	April 21, 2006
First Named Inventor	Andrew G.V. Oldknow
Title	Portion Of A Golf Club Head
Atty Docket Number	015127.00706

13000 U.S. PTO
29/258314
042106

HAND DELIVER TO THE DESIGN GROUP DIRECTOR'S OFFICE
-or- ADDRESS TO:
MAIL STOP EXPEDITED DESIGN
COMMISSIONER FOR PATENTS
P.O. Box 1450
Alexandria, VA 22313-1450

This is a request for expedited examination of a design application under 37 CFR 1.155.

NOTE: If the Request made by this form accompanies original application papers, include form PTO/SB/18 "Design Patent Application Transmittal" or its equivalent.

A preexamination search was conducted. The field of search was:

Class D21/733, 747, 748, 749, 750, 751, 752, 753, 759;
Class 473/287, 290, 291, 324, 325, 326, 327, 328, 329, 330, 331, 349 and 350.

Related applications: This application is related to 015127.00707 (Portion of a Golf Club Head) being filed on even date herewith

If not previously filed for the above-identified application, the following items required by 37 CFR 1.155 are enclosed:

Formal drawings (see 37 CFR 1.84).

The fee set forth in 37 CFR 1.17(k).

An information disclosure statement in compliance with 37 CFR 1.98.

5-16-06
Approved
Jacqueline M. Stone
Jacqueline M. Stone, Director
Technology Center 1700/2900

4/21/06
Date

Signature

202-824-3000
Telephone Number

David R. Gerk-Registration No. 56,901
Typed or printed name

WARNING: Information on this form may become public. Credit card information should not be included on this form. Provide credit card information and authorization on PTO-2038.

This collection of information is required by 37 CFR 1.155. The information is required to obtain or retain a benefit by the public which is to file (and by the USPTO to process) an application. Confidentiality is governed by 35 U.S.C. 122 and 37 CFR 1.14. This collection is estimated to take 6 minutes to complete, including gathering, preparing, and submitting the completed application form to the USPTO. Time will vary depending upon the individual case. Any comments on the amount of time you require to complete this form and/or suggestions for reducing this burden, should be sent to the Chief Information Officer, U.S. Patent and Trademark Office, U.S. Department of Commerce, P.O. Box 1450, Alexandria, VA 22313-1450. DO NOT SEND FEES OR COMPLETED FORMS TO THIS ADDRESS. SEND TO: Mail Stop Expedited Design, Commissioner for Patents, P.O. Box 1450, Alexandria, VA 22313-1450.

If you need assistance in completing the form, call 1-800-PTO-9199 and select option 2.

04/24/2006 SSITHIB1 00000076 190733 29258314
01 FC:1802 900.00 DA

PTO/SB/27 (05-03)
Approved for use through 04/30/2003. OMB 0651-0031
U.S. Patent and Trademark Office; U.S. DEPARTMENT OF COMMERCE
Under the Paperwork Reduction Act of 1995, no persons are required to respond to a collection of information unless it displays a valid OMB control number.

REQUEST FOR EXPEDITED EXAMINATION OF A DESIGN APPLICATION (37 CFR 1.155)

Application Number	TO BE ASSIGNED
Filing Date	April 21, 2006
First Named Inventor	Andrew G.V. Oldknow
Title	Portion Of A Golf Club Head
Atty Docket Number	015127.00704

13000 U.S. PTO
29/258315
042106

HAND DELIVER TO THE DESIGN GROUP DIRECTOR'S OFFICE
-or- ADDRESS TO:
MAIL STOP EXPEDITED DESIGN
COMMISSIONER FOR PATENTS
P.O. Box 1450
Alexandria, VA 22313-1450

This is a request for expedited examination of a design application under 37 CFR 1.155.

NOTE: If the Request made by this form accompanies original application papers, include form PTO/SB/18 "Design Patent Application Transmittal" or its equivalent.

A preexamination search was conducted. The field of search was:

Class D21/733, 747, 748, 749, 750, 751, 752, 753, 759;
Class 473/287, 290, 291, 324, 325, 326, 327, 328, 329, 330, 331, 349 and 350.

Related applications: Attorney Docket 015127.00705 Filed April 21, 2006

If not previously filed for the above-identified application, the following items required by 37 CFR 1.155 are enclosed:

- Formal drawings (see 37 CFR 1.84).

The fee set forth in 37 CFR 1.17(k).

An information disclosure statement in compliance with 37 CFR 1.98.

5-16-06
Approved
Jacqueline M. Stone
Jacqueline M. Stone, Director
Technology Center 1700/2900

April 21, 2006
Date

Signature

202-824-3000
Telephone Number

David R. Gerk-Registration No. 56,901
Typed or printed name

WARNING: Information on this form may become public. Credit card information should not be included on this form. Provide credit card information and authorization on PTO-2038.

This collection of information is required by 37 CFR 1.155. The information is required to obtain or retain a benefit by the public which is to file (and by the USPTO to process) an application. Confidentiality is governed by 35 U.S.C. 122 and 37 CFR 1.14. This collection is estimated to take 6 minutes to complete, including gathering, preparing, and submitting the completed application form to the USPTO. Time will vary depending upon the individual case. Any comments on the amount of time you require to complete this form and/or suggestions for reducing this burden, should be sent to the Chief Information Officer, U.S. Patent and Trademark Office, U.S. Department of Commerce, P.O. Box 1450, Alexandria, VA 22313-1450. DO NOT SEND FEES OR COMPLETED FORMS TO THIS ADDRESS. SEND TO: Mail Stop Expedited Design, Commissioner for Patents, P.O. Box 1450, Alexandria, VA 22313-1450.

If you need assistance in completing the form, call 1-800-PTO-9199 and select option 2.

04/24/2006 SSITHIB1 00000075 190733 29258315

01 FC:1802 900.00 DA

PTO/SB/27 (05-03)
Approved for use through 04/30/2003. OMB 0651-0031
U.S. Patent and Trademark Office; U.S. DEPARTMENT OF COMMERCE
Under the Paperwork Reduction Act of 1995, no persons are required to respond to a collection of information unless it displays a valid OMB control number.

REQUEST FOR EXPEDITED EXAMINATION OF A DESIGN APPLICATION (37 CFR 1.155)

Application Number	TO BE ASSIGNED
Filing Date	April 21, 2006
First Named Inventor	Andrew G.V. Oldknow
Title	Portion Of A Golf Club Head
Atty Docket Number	015127.00709

13000 U.S. PTO
29/258316
042106

HAND DELIVER TO THE DESIGN GROUP DIRECTOR'S OFFICE
-or- ADDRESS TO:
MAIL STOP EXPEDITED DESIGN
COMMISSIONER FOR PATENTS
P.O. Box 1450
Alexandria, VA 22313-1450

This is a request for expedited examination of a design application under 37 CFR 1.155.

NOTE: If the Request made by this form accompanies original application papers, include form PTO/SB/18 "Design Patent Application Transmittal" or its equivalent.

A preexamination search was conducted. The field of search was:

Class D21/733, 747, 748, 749, 750, 751, 752, 753, 759;
Class 473/287, 290, 291, 324, 325, 326, 327, 328, 329, 330, 331, 349 and 350.

Related applications: _____

If not previously filed for the above-identified application, the following items required by 37 CFR 1.155 are enclosed:

Formal drawings (see 37 CFR 1.84).

The fee set forth in 37 CFR 1.17(k).

An information disclosure statement in compliance with 37 CFR 1.98.

5-16-06
Approved
Jacqueline M. Stone
Jacqueline M. Stone, Director
Technology Center 1700/2900

4/21/06
Date

Signature

202-824-3000
Telephone Number

David R. Gerk-Registration No. 56,901
Typed or printed name

WARNING: Information on this form may become public. Credit card information should not be included on this form. Provide credit card information and authorization on PTO-2038.

This collection of information is required by 37 CFR 1.155. The information is required to obtain or retain a benefit by the public which is to file (and by the USPTO to process) an application. Confidentiality is governed by 35 U.S.C. 122 and 37 CFR 1.14. This collection is estimated to take 6 minutes to complete, including gathering, preparing, and submitting the completed application form to the USPTO. Time will vary depending upon the individual case. Any comments on the amount of time you require to complete this form and/or suggestions for reducing this burden, should be sent to the Chief Information Officer, U.S. Patent and Trademark Office, U.S. Department of Commerce, P.O. Box 1450, Alexandria, VA 22313-1450. DO NOT SEND FEES OR COMPLETED FORMS TO THIS ADDRESS. SEND TO: Mail Stop Expedited Design, Commissioner for Patents, P.O. Box 1450, Alexandria, VA 22313-1450.

If you need assistance in completing the form, call 1-800-PTO-9199 and select option 2.

04/24/2006 SSITHIB1 00000074 190733 29258316
01 FC:1802 900.00 DA

PTO/SB/27 (05-03)
Approved for use through 04/30/2003. OMB 0651-0031
U.S. Patent and Trademark Office; U.S. DEPARTMENT OF COMMERCE
Under the Paperwork Reduction Act of 1995, no persons are required to respond to a collection of information unless it displays a valid OMB control number.

REQUEST FOR EXPEDITED EXAMINATION OF A DESIGN APPLICATION (37 CFR 1.155)

Application Number	TO BE ASSIGNED
Filing Date	April 21, 2006
First Named Inventor	Andrew G.V. Oldknow
Title	Portion Of A Golf Club Head
Atty Docket Number	015127.00705

13000 U.S. PTO
29/258317
042106

HAND DELIVER TO THE DESIGN GROUP DIRECTOR'S OFFICE
-or- ADDRESS TO:
MAIL STOP EXPEDITED DESIGN
COMMISSIONER FOR PATENTS
P.O. Box 1450
Alexandria, VA 22313-1450

This is a request for expedited examination of a design application under 37 CFR 1.155.

NOTE: If the Request made by this form accompanies original application papers, include form PTO/SB/18 "Design Patent Application Transmittal" or its equivalent.

A preexamination search was conducted. The field of search was:

Class D21/733, 747, 748, 749, 750, 751, 752, 753, 759;
Class 473/287, 290, 291, 324, 325, 326, 327, 328, 329, 330, 331, 349 and 350.

Related applications: Attorney Docket 015127.00704 Filed April 21, 2006

If not previously filed for the above-identified application, the following items required by 37 CFR 1.155 are enclosed:

Formal drawings (see 37 CFR 1.84).

The fee set forth in 37 CFR 1.17(k).

An information disclosure statement in compliance with 37 CFR 1.98.

5-16-06
Approved
Jacqueline M. Stone
Jacqueline M. Stone, Director
Technology Center 1700/2900

April 21, 2006
Date

Signature

202-824-3000
Telephone Number

David R. Gerk-Registration No. 56,901
Typed or printed name

WARNING: Information on this form may become public. Credit card information should not be included on this form. Provide credit card information and authorization on PTO-2038.

This collection of information is required by 37 CFR 1.155. The information is required to obtain or retain a benefit by the public which is to file (and by the USPTO to process) an application. Confidentiality is governed by 35 U.S.C. 122 and 37 CFR 1.14. This collection is estimated to take 6 minutes to complete, including gathering, preparing, and submitting the completed application form to the USPTO. Time will vary depending upon the individual case. Any comments on the amount of time you require to complete this form and/or suggestions for reducing this burden, should be sent to the Chief Information Officer, U.S. Patent and Trademark Office, U.S. Department of Commerce, P.O. Box 1450, Alexandria, VA 22313-1450. DO NOT SEND FEES OR COMPLETED FORMS TO THIS ADDRESS. SEND TO: Mail Stop Expedited Design, Commissioner for Patents, P.O. Box 1450, Alexandria, VA 22313-1450.

If you need assistance in completing the form, call 1-800-PTO-9199 and select option 2.

04/24/2006 SSITHIB1 00000073 190733 29258317
01 FC:1802 900.00 DA

PTO/SB/27 (05-03)
Approved for use through 04/30/2003. OMB 0651-0031
U.S. Patent and Trademark Office; U.S. DEPARTMENT OF COMMERCE
Under the Paperwork Reduction Act of 1995, no persons are required to respond to a collection of information unless it displays a valid OMB control number.

REQUEST FOR EXPEDITED EXAMINATION OF A DESIGN APPLICATION (37 CFR 1.155)

Application Number	TO BE ASSIGNED
Filing Date	April 21, 2006
First Named Inventor	Andrew G.V. Oldknow
Title	Portion Of A Golf Club Head
Atty Docket Number	015127.00710

13000 U.S. PTO
29/258318
042106

HAND DELIVER TO THE DESIGN GROUP DIRECTOR'S OFFICE
-or- ADDRESS TO:
MAIL STOP EXPEDITED DESIGN
COMMISSIONER FOR PATENTS
P.O. Box 1450
Alexandria, VA 22313-1450

This is a request for expedited examination of a design application under 37 CFR 1.155.

NOTE: If the Request made by this form accompanies original application papers, include form PTO/SB/18 "Design Patent Application Transmittal" or its equivalent.

A preexamination search was conducted. The field of search was:

Class D21/733, 747, 748, 749, 750, 751, 752, 753, 759;
Class 473/287, 290, 291, 324, 325, 326, 327, 328, 329, 330, 331, 349 and 350.

Related applications: _____

If not previously filed for the above-identified application, the following items required by 37 CFR 1.155 are enclosed:

Formal drawings (see 37 CFR 1.84).

The fee set forth in 37 CFR 1.17(k).

An information disclosure statement in compliance with 37 CFR 1.98.

5-16-06
Approved Jacqueline M. Stone
Jacqueline M. Stone, Director
Technology Center 1700/2900

4/21/06
Date

Signature

202-824-3000
Telephone Number

David R. Gerk-Registration No. 56,901
Typed or printed name

WARNING: Information on this form may become public. Credit card information should not be included on this form. Provide credit card information and authorization on PTO-2038.

This collection of information is required by 37 CFR 1.155. The information is required to obtain or retain a benefit by the public which is to file (and by the USPTO to process) an application. Confidentiality is governed by 35 U.S.C. 122 and 37 CFR 1.14. This collection is estimated to take 6 minutes to complete, including gathering, preparing, and submitting the completed application form to the USPTO. Time will vary depending upon the individual case. Any comments on the amount of time you require to complete this form and/or suggestions for reducing this burden, should be sent to the Chief Information Officer, U.S. Patent and Trademark Office, U.S. Department of Commerce, P.O. Box 1450, Alexandria, VA 22313-1450. DO NOT SEND FEES OR COMPLETED FORMS TO THIS ADDRESS. SEND TO: Mail Stop Expedited Design, Commissioner for Patents, P.O. Box 1450, Alexandria, VA 22313-1450.

If you need assistance in completing the form, call 1-800-PTO-9199 and select option 2.

04/24/2006 SSITHIB1 00000072 190733 29258318
01 FC:1802 900.00 DA

UNITED STATES PATENT AND TRADEMARK OFFICE

Commissioner for Patents
United States Patent and Trademark Office
P.O. Box 1450
Alexandria, VA 22313-1450
www.uspto.gov

SAM TALPALATSKY
10867 CLOVERHURST WAY
SAN DIEGO CA 92130

COPY MAILED

SEP 28 2007

OFFICE OF PETITIONS

In re Application of	:	
Kuo Wen-Po	:	
Application No. 29/258,382	:	ON PETITION
Filed: April 20, 2006	:	
Attorney Docket No. EQ 043592977 US	:	

This is a decision on the petition to revive an unintentionally abandoned application under 37 CFR 1.137(b), filed August 23, 2007.

The petition under 37 CFR 1.137(b) is **GRANTED**.

The above-identified application became abandoned for failure to timely pay the issue fee in response to the Notice of Allowance mailed September 20, 2006. This notice set a statutory period for reply of three (3) months. No issue fee having been received, the application became abandoned on December 21, 2006. A Notice of Abandonment was mailed on January 26, 2007.

With the instant petition, applicant paid the petition fee, made the proper statement of unintentional delay, submitted a terminal disclaimer, and paid the issue fee.

The matter is being forwarded to the Office of Patent Publication for processing into a patent.

Telephone inquiries related to this decision should be directed to the undersigned at (571)272-3207.

Cliff Congo
Petitions Attorney
Office of Petitions

UNITED STATES PATENT AND TRADEMARK OFFICE

COMMISSIONER FOR PATENTS
UNITED STATES PATENT AND TRADEMARK OFFICE
P.O. BOX 1450
ALEXANDRIA, VA 22313-1450
www.uspto.gov

MALLOY & MALLOY, P.A.
HISTORIC CORAL WAY
2800 S.W. THIRD AVENUE
MIAMI, FL 33129

COPY MAILED

NOV 21 2007

OFFICE OF PETITIONS

In re Application of
Jeffrey A. Kramer
Application No. 29/258,430
Filed: April 21, 2006
Attorney Docket No. 1.417.05

ON PETITION

This is a decision on the petition under 37 CFR 1.137(b), filed June 20, 2007, to revive the above-identified application.

The petition is **DISMISSED**.

Any request for reconsideration of this decision must be submitted within TWO (2) MONTHS from the mail date of this decision. Extensions of time under 37 CFR 1.136(a) are permitted. The reconsideration request should include a cover letter entitled "Renewed Petition under 37 CFR 1.137(b)." This is **not** a final agency action within the meaning of 5 U.S.C. § 704.

A review of the record discloses that a Notice of Allowance was mailed on September 1, 2006. On November 7, 2006, applicant filed a Request for Continued Examination under 37 CFR 1.114 (RCE); however, the RCE was considered improper since continued examination under 37 CFR 1.114 dose not apply to a design application. Consequently, the application became abandoned on December 2, 2006 for a failure to pay the issue fee. A Notice of Abandonment was mailed on May 10, 2007. On May 11, 2007 a request for a Continued Prosecution Application (CPA) was filed, which probably crossed in the mail with the Notice of Abandonment. On June 20, 2007, the present petition to revive was filed, along with a CPA.

A grantable petition under 37 CFR 1.137(b)[1] must be accompanied by: (1) the required reply, unless previously filed; (2) the petition fee as set forth in 37 CFR 1.17(m); (3) a statement that the entire delay in filing the required reply from the due date for the reply until the filing of a grantable petition pursuant to 37 CFR 1.137(b) was unintentional; and (4) any terminal disclaimer (and fee as set forth in 37 CFR 1.20(d)) required by 37 CFR 1.137(c). Where there is a question as to whether either the abandonment or the delay in filing a petition under 37 CFR 1.137 was unintentional, the Commissioner may require additional information. See MPEP 711.03(c)(III)(C) and (D).

[1] As amended effective December 1, 1997. See Changes to Patent Practice and Procedure; Final Rule Notice, 62 Fed. Reg. 53131, 53194-95 (October 10, 1997), 1203 Off. Gaz. Pat. Office 63, 119-20 (October 21, 1997).

The petition lacks items (1) and (4) above.

As to item (1) In an application or patent, abandoned or lapsed for failure to pay the issue fee or any portion thereof, the required reply under 37 CFR 1.137(b) must be the payment of the issue fee or any outstanding balance thereof.

As to item (4) Since the above-identified application is a design application, 37 CFR 1.137(d) requires a terminal disclaimer dedicating to the public a terminal part of the term of any patent granted thereon equivalent to the period of abandonment of the application. The period of abandonment will be computed to be the number of months from the date of abandonment to the date of filing a grantable petition. A terminal disclaimer fee of $130 ($65 if small entity) is required. If the terminal disclaimer is signed by an assignee, the assignee must comply with the requirements of 37 CFR 3.73(b).

Further correspondence with respect to this matter should be addressed as follows:

By mail: Mail Stop PETITION
Commissioner for Patents
Post Office Box 1450
Alexandria, VA 22313-1450

By hand: U.S. Patent and Trademark Office
Customer Service Window, Mail Stop PETITION
Randolph Building
401 Dulany Street
Alexandria, VA 22314

The centralized facsimile number is **(571) 273-8300**.

Any questions concerning this matter may be directed to the undersigned at (571) 272-3204.

Sherry D. Brinkley
Petitions Examiner
Office of Petitions

UNITED STATES PATENT AND TRADEMARK OFFICE

Commissioner for Patents
United States Patent and Trademark Office
P.O. Box 1450
Alexandria, VA 22313-1450
www.uspto.gov

MALLOY & MALLOY, P.A.
HISTORIC CORAL WAY
2800 S.W. THIRD AVENUE
MIAMI, FL 33129

COPY MAILED

FEB 27 2008

OFFICE OF PETITIONS

In re Application of
Jeffrey A. Kramer
Application No. 29/258,430
Filed: April 21, 2006
Attorney Docket No. 1.417.05

ON PETITION

This is a decision on the renewed petition under 37 CFR 1.137(b), filed December 20, 2007, to revive the above-identified design application.

The petition is **GRANTED**.

The application became abandoned for failure to timely pay the issue fee on or before December 1, 2006, as required by the Notice of Allowance and Fee(s) Due, mailed September 1, 2006, which set a statutory period for reply of three (3) months. A Notice of Abandonment was mailed on May 10, 2007. In response, on June 20, 2007, a petition under 37 CFR 1.137(b) was filed; however, the petition was dismissed in a decision mailed November 21, 2007. On December 21, 2007, the present petition was filed.

The petition now satisfies the requirements of 37 CFR 1.137(b) in that petitioner has supplied (1) the reply in the form of the $410 issue fee, (2) the petition fee of $750, (3) a proper statement of unintentional delay, and (4) a terminal disclaimer and fee as required by 37 CFR 1.137(d). Accordingly, the failure to timely pay the issue fee as required by the Notice of September 1, 2006 is accepted as being unintentionally delayed.

Petitioner is reminded that the issue fee paid on December 20, 2007 in the parent application is not refundable nor can it be applied towards the new Notice of Allowance resulting from the CPA filed June 20, 2007.

The terminal disclaimer filed December 20, 2007 is accepted and has been made of record. Any continuing application filed from this application must contain a copy of the terminal disclaimer. The copy of the terminal disclaimer must be filed with a cover letter requesting the terminal disclaimer be recorded on the continuing application. A copy of this decision should be attached to the cover letter.

In view of this decision, the application is being returned to Technology Center 2915 for further processing of the CPA filed on June 20, 2007.

The $395 filing fee paid for the improper RCE on November 7, 2006, is being credited to counsel's deposit account as authorized.

Telephone inquiries regarding this decision should be directed to the undersigned at (571) 272-3204.

Sherry D. Brinkley
Petitions Examiner
Office of Petitions

UNITED STATES PATENT AND TRADEMARK OFFICE

Commissioner for Patents
United States Patent and Trademark Office
P.O. Box 1450
Alexandria, VA 22313-1450
www.uspto.gov

THOMPSON COBURN LLP
ONE US BANK PLAZA
SUITE 3500
ST LOUIS MO 63101

COPY MAILED

JUL 13 2007

OFFICE OF PETITIONS

In re Application of	:	
Kurth, et al.	:	
Application No. 29/258,432	:	ON PETITION
Filed: April 20, 2006	:	
Attorney Docket No. 44643-61390	:	

This is a decision on the petition to revive under 37 CFR 1.137(a), filed June 29, 2007.

The petition under 37 CFR 1.137(a) is **GRANTED.**

The above-identified application became abandoned for failure to reply to the Notice of Allowance mailed January 31, 2007. This Notice set a statutory period for reply of three (3) months for issue fee transmittal. No issue fee having been received, the application became abandoned on May 1, 2007. The mailing of this decision precedes the mailing of a Notice of Abandonment.

A grantable petition under 37 CFR 1.137(a) must be accompanied by: (1) the required reply, unless previously filed; (2) the petition fee as set forth in 37 CFR 1.17(l); (3) a showing to the satisfaction of the Commissioner that the entire delay in filing the required reply from the due date for the reply until the filing of a grantable petition pursuant to 37 CFR 1.137(a) was unavoidable; and (4) any terminal disclaimer (and fee as set forth in 37 CFR 1.20(d)) required pursuant to 37 CFR 1.137(d). Decisions on reviving abandoned applications on the basis of "unavoidable" delay have adopted the reasonably prudent

person standard in determining if the delay was unavoidable:

> The word 'unavoidable' . . . is applicable to ordinary human affairs, and requires no more or greater care or diligence than is generally used and observed by prudent and careful men in relation to their most important business. It permits them in the exercise of this care to rely upon the ordinary and trustworthy agencies of mail and telegraph, worthy and reliable employees, and such other means and instrumentalities as are usually employed in such important business. If unexpectedly, or through the unforeseen fault or imperfection of these agencies and instrumentalities, there occurs a failure, it may properly be said to be unavoidable, all other conditions of promptness in its rectification being present.[1]

Moreover, a petition cannot be granted where a petitioner has failed to meet his or her burden of establishing that the delay was "unavoidable."[2]

A review of the application reveals that the Notice of Allowance was returned as undeliverable due to an error on the part of the Office.

In view of the above, it is concluded that petitioner has met his burden of establishing that the delay was unavoidable.

Receipt of the petition fee, issue fee, and terminal disclaimer fee is acknowledged.

The matter is being forwarded to the Office of Patent Publication for processing into a patent.

Telephone inquiries concerning this decision should be directed to the undersigned at (571)272-3207.

Cliff Congo
Petitions Attorney
Office of Petitions

---

[1] In re Mattullath, 38 App. D.C. 497, 514-15 (1912)(quoting Ex parte Pratt, 1887 Dec. Comm'r Pat. 31, 32-33 (1887)); see also Winkler v. Ladd, 221 F. Supp. 550, 552, 138 USPQ 666, 167-68 (D.D.C. 1963), aff'd, 143 USPQ 172 (D.C. Cir. 1963); Ex parte Henrich, 1913 Dec. Comm'r Pat. 139, 141 (1913).

[2] Haines v. Quigg, 673 F. Supp. 314, 316-17, 5 USPQ2d 1130, 1131-32 (N.D. Ind. 1987).

UNITED STATES PATENT AND TRADEMARK OFFICE

Commissioner for Patents
United States Patent and Trademark Office
P.O. Box 1450
Alexandria, VA 22313-1450
www.uspto.gov

CHRISTENSEN, O'CONNOR, JOHNSON, KINDNESS, PLLC
1420 FIFTH AVENUE
SUITE 2800
SEATTLE WA 98101-2347

COPY MAILED

APR 03 2008

OFFICE OF PETITIONS

In re Application of	:
James Vernon Mischel Jr., et al	: DECISION GRANTING PETITION
Application No. 29/258,462	: UNDER 37 CFR 1.313(c)(3) (CPA)
Filed: April 22, 2006	:
Attorney Docket No. ELEM128893	:

This is a decision on the petition under 37 CFR 1.313(c)(3), filed April 1, 2008, to withdraw the above-identified application from issue after payment of the issue fee.

The petition is **GRANTED**.

The above-identified application is hereby withdrawn from issue in favor of a continued prosecution application (CPA) under 37 CFR 1.53(d).

Petitioner is advised that the issue fee paid on November 9, 2007 in the parent application is not refundable nor can it be applied towards any new Notice of Allowance which may issue on the CPA filed April 1, 2008.

Telephone inquiries should be directed to the undersigned at (571) 272-3208.

This matter is being referred to Technology Center AU 2913 for processing of the CPA and consideration of the concurrently filed IDS.

Karen Creasy

Karen Creasy
Petitions Examiner
Office of Petitions

UNITED STATES PATENT AND TRADEMARK OFFICE

Commissioner for Patents
United States Patent and Trademark Office
P.O. Box 1450
Alexandria, VA 22313-1450
www.uspto.gov

KLARQUIST SPARKMAN, LLP
121 SW SALMON STREET, SUITE 1600
PORTLAND OR 97204

COPY MAILED

SEP 21 2007

OFFICE OF PETITIONS

In re Application of	:
FORTHAUS, et al.	: DECISION GRANTING PETITION
Application No. 29/258,468	: UNDER 37 CFR 1.313(c)(3) (CPA)
Filed: April 21, 2006	:
Attorney Docket No. **7207-66771-02**	:

This is a decision on the petition under 37 CFR 1.313(c)(3), filed September 13, 2007, to withdraw the above-identified application from issue after payment of the issue fee.

The petition is **GRANTED.**

The above-identified application is hereby withdrawn from issue in favor of a continued prosecution application (CPA) under 37 CFR 1.53(d).

Petitioner is advised that the issue fee paid on March 37, 2007 in the parent application is not refundable nor can it be applied towards any new Notice of Allowance which may issue on the CPA filed September 13, 2007.

Telephone inquiries should be directed to the undersigned at (571) 272-7253.

This matter is being referred to Technology Center AU 2912 for processing of the CPA and consideration of the concurrently filed information disclosure statement.

Karen Creasy for

Frances Hicks
Petitions Examiner
Office of Petitions

SPE RESPONSE FOR CERTIFICATE OF CORRECTION

Paper No.: _____

DATE : March 22, 2010

TO SPE OF : ART UNIT 2912 - SPE Stella M. Reid.

SUBJECT : Request for Certificate of Correction for Appl. No.: 29/258,468 Patent No.: D568,738 B2

Please respond to this request for a certificate of correction within 7 days.

FOR IFW FILES:

Please review the requested changes/corrections as shown in the **COCIN** document(s) in the IFW application image. No new matter should be introduced, nor should the scope or meaning of the claims be changed.

Please complete the response (see below) and forward the completed response to scanning using document code **COCX**.

FOR PAPER FILES:

Please review the requested changes/corrections as shown in the attached certificate of correction. Please complete this form (see below) and forward it with the file to:

Certificates of Correction Branch (CofC)
Randolph Square Building
2800 South Randolph Street
Arlington, VA 22206

Antonio Johnson

Should the changes in the design claim be approved?
See COCIN dated 03-11-2010

Certificates of Correction Branch
(571)272-0483

Thank You For Your Assistance

The request for issuing the above-identified correction(s) is hereby:
Note your decision on the appropriate box.

X	**Approved**	**All** changes apply.
☐	**Approved in Part**	Specify below which changes **do not** apply.
☐	**Denied**	State the reasons for denial below.

Comments: _____

STELLA M. REID
SUPERVISORY PATENT EXAMINER
SPE

2912
Art Unit

UNITED STATES PATENT AND TRADEMARK OFFICE

Commissioner for Patents
United States Patent and Trademark Office
P.O. Box 1450
Alexandria, VA 22313-1450
www.uspto.gov

BRUCE H. TROXELL
SUITE 1404
5205 LEESBURG PIKE
FALLS CHURCH VA 22041

COPY MAILED
SEP 0 8 2008

In re Application of	:	
Aaron Chu, et al.	:	
Application No. 29/258,593	:	DECISION ON PETITION
Filed: April 25, 2006	:	
Attorney Docket No. BHT-3117-426	:	

This is a decision on the petition under the unintentional provisions of 37 CFR 1.137(b), filed November 8, 2007, to revive the above-identified application.

The petition is **GRANTED**.

This application became abandoned for failure to timely pay the issue fee on or before October 26, 2006, as required by the Notice of Allowance and Fee(s) Due, mailed July 26, 2006 . Accordingly, the date of abandonment of this application is October 27, 2006. The Notice of Abandonment was mailed December 7, 2006.

The petition satisfies the requirements of 37 CFR 1.137(b) in that petitioner has supplied (1) the reply in the form of payment of the issue fee of $820, (2) the petition fee of $1,540; (3) terminal disclaimer (and fee as set forth in 37 CFR 1.20(d)) required by 37 CFR 1.137(d); and (4) a proper statement of unintentional delay.

The terminal disclaimer is accepted and has been made of record. Any continuing application filed from this application must contain a copy of the terminal disclaimer. The copy of the terminal disclaimer must be filed with a cover letter requesting the terminal disclaimer be recorded on the continuing application. A copy of this decision should be attached to the cover letter.

Telephone inquiries concerning this decision should be directed to Terri Williams at (571) 272-2991.

This application is being referred to the Office of Data Management for processing into a patent.

Chris Bottorff
Petitions Examiner
Office of Petitions

UNITED STATES PATENT AND TRADEMARK OFFICE

Commissioner for Patents
United States Patent and Trademark Office
P.O. Box 1450
Alexandria, VA 22313-1450
www.uspto.gov

MEREK, BLACKMON & VOORHEES, LLC
673 S. WASHINGTON ST.
ALEXANDRIA WV 22314

COPY MAILED

FEB 1 2 2008

OFFICE OF PETITIONS

In re Application of	:	
Mark Kevin Addison	:	
Application No. 29/258,594	:	DECISION ON PETITION
Filed: April 25, 2006	:	
Attorney Docket No. DE-33CONT	:	

This is a decision on the petition under the unintentional provisions of 37 CFR 1.137(b), filed May 10, 2007, to revive the above-identified application.

The petition is **GRANTED**.

This application became abandoned for failure to timely pay the issue fee on or before May 8, 2007, as required by the Notice of Allowance and Fee(s) due, mailed February 8, 2007. Accordingly, the date of abandonment of this application is May 9, 2007. The Notice of Abandonment was mailed July 11, 2007.

The petition satisfies the requirements of 37 CFR 1.137(b) in that petitioner has supplied (1) the reply in the form of payment of the issue fee of $400, (2) the petition fee of $750; (3) a terminal disclaimer and fee as required by 37 CFR 1.137(d); and (4) a proper statement of unintentional delay.

Telephone inquiries concerning this decision should be directed to Terri Williams at (571) 272-2991.

This application is being referred to the Office of Data Management for processing into a patent.

Liana Walsh
Petitions Examiner
Office of Petitions

PTO/SB/27 (05-03)
Approved for use through 04/30/2003. OMB 0651-0031
U.S. Patent and Trademark Office; U.S. DEPARTMENT OF COMMERCE
Under the Paperwork Reduction Act of 1995, no persons are required to respond to a collection of information unless it displays a valid OMB control number.

22651 U.S.PTO
042506

REQUEST FOR EXPEDITED EXAMINATION OF A DESIGN APPLICATION (37 CFR 1.155)

Application Number	TO BE ASSIGNED
Filing Date	April 25, 2006
First Named Inventor	Carl L. Madore
Title	Portion Of A Golf Club Head
Atty Docket Number	015127.00702

1 3006 U.S.PTO
29/258605
042506

HAND DELIVER TO THE DESIGN GROUP DIRECTOR'S OFFICE
-or- ADDRESS TO:
MAIL STOP EXPEDITED DESIGN
COMMISSIONER FOR PATENTS
P.O. Box 1450
Alexandria, VA 22313-1450

This is a request for expedited examination of a design application under 37 CFR 1.155.

NOTE: If the Request made by this form accompanies original application papers, include form PTO/SB/18 "Design Patent Application Transmittal" or its equivalent.

A preexamination search was conducted. The field of search was:

Class D21/733, 747, 748, 749, 750, 751, 752, 753, 759;
Class 473/287, 290, 291, 324, 325, 326, 327, 328, 329, 330, 331, 349 and 350.

Related applications: 29/174,527 filed January 22, 2003 which is a CIP of 29/167,540 (now USP D475,107) Filed September 18, 2002, 29/167,578 (now USP D475,428) Filed September 18, 2002 and 29/167,580 (now USP D475,108) Filed September 18, 2002.

If not previously filed for the above-identified application, the following items required by 37 CFR 1.155 are enclosed:

Formal drawings (see 37 CFR 1.84).

The fee set forth in 37 CFR 1.17(k).

An information disclosure statement in compliance with 37 CFR 1.98.

5-5-06
Approved
Jacqueline M. Stone
Jacqueline M. Stone, Director
Technology Center 1700/2900

April 25, 2006
Date

Signature

202-824-3000
Telephone Number

David R. Gerk-Registration No. 56,901
Typed or printed name

WARNING: Information on this form may become public. Credit card information should not be included on this form. Provide credit card information and authorization on PTO-2038.

This collection of information is required by 37 CFR 1.155. The information is required to obtain or retain a benefit by the public which is to file (and by the USPTO to process) an application. Confidentiality is governed by 35 U.S.C. 122 and 37 CFR 1.14. This collection is estimated to take 6 minutes to complete, including gathering, preparing, and submitting the completed application form to the USPTO. Time will vary depending upon the individual case. Any comments on the amount of time you require to complete this form and/or suggestions for reducing this burden, should be sent to the Chief Information Officer, U.S. Patent and Trademark Office, U.S. Department of Commerce, P.O. Box 1450, Alexandria, VA 22313-1450. DO NOT SEND FEES OR COMPLETED FORMS TO THIS ADDRESS. SEND TO: Mail Stop Expedited Design, Commissioner for Patents, P.O. Box 1450, Alexandria, VA 22313-1450.

04/26/2006 SSITHIB1 00000075 190733 29258605
04 FC:1802 900.00 DA

UNITED STATES PATENT AND TRADEMARK OFFICE

COMMISSIONER FOR PATENTS
UNITED STATES PATENT AND TRADEMARK OFFICE
P.O. BOX 1450
ALEXANDRIA, VA 22313-1450
www.uspto.gov

Norris, McLaughlin & Marcus P.A.
18th Floor
875 Third Avenue
New York NY 10022

COPY MAILED
DEC 15 2006
OFFICE OF PETITIONS

In re Application of :
McCarthy : DECISION
Application No.: 29/258,624 :
Filed: April 25, 2006 :
Docket No.: 102792-579 :
(11310D4 US/2) :

This decision is in response to the "PETITION TO ADMIT OATH & DECLARATION PURUSANT TO 37 CFR 1.47(A), 35 USC 118 (INVENTOR UNAVAILABLE - 'CANNOT BE REACHED') filed November 30, 2006. This matter is being properly treated under 37 CFR 1.183 as a petition to waive the requirement of 37 CFR 1.67.

The petition is hereby **DISMISSED**.

The required petition fee of $400.00 has been charged to petitioner's deposit account as authorized.

This petition is not subject to the provisions of 37 CFR 1.47 as once an executed oath or declaration has been filed and been placed in the application for examination, the provisions of 37 CFR 1.47 no longer apply. Rather the remedy for treating an inventor's refusal or unavailability to sign a supplemental declaration is a waiver of 37 CFR 1.67. *See* MPEP 603. Nonetheless, it is appropriate to apply the principles of 37 CFR 1.47 in evaluating the merits of the instant petition. *See* MPEP 409.03(a).

The Notice of Allowability mailed November 30, 2006 requires submission of a supplemental oath or declaration. The supplemental declaration submitted herewith has not been executed.

37 CFR 1.67(a)(1) states:

> "Deficiencies or inaccuracies relating to all the inventors or applicants (§§ 1.42, 1.43, or § 1.47) may be corrected with a supplemental oath or declaration signed by all the inventors or applicants."

In accordance with MPEP 603, "[w]hen an inventor who executed the original declaration is refusing or cannot be found to execute a required supplemental declaration, the requirement for that inventor to sign the supplemental declaration may be suspended or waived in accordance with 37 CFR 1.183. All available joint inventor(s) must sign the supplemental declaration on behalf of themselves, if appropriate, and on behalf of the nonsigning inventor. If there are no joint inventor(s), then the party with sufficient proprietary interest must sign the supplemental declaration on behalf of the nonsigning inventor. *See* MPEP §409.03(a)."

A grantable petition under 37 CFR 1.183 to waive the requirements of 37 CFR 1.67 requires petitioner to establish that this is an extraordinary situation where justice requires waiver of the rules.

Petitioner herein has failed to set forth any steps taken to locate the inventor for presentation of the supplemental oath or declaration. Instead, petitioner has merely indicated that packages enclosing the supplemental declaration mailed to the inventor at the inventor's last known address have been undeliverable due to "lack of a correct address."

As petitioner has failed to establish the existence of an "extraordinary situation," waiver of the requirements of 37 CFR 1.67 at this juncture would be inappropriate.

Any renewed petition must establish that the nonsigning inventor cannot be reached for presentation of the supplemental oath or declaration.

Petitioners are reminded that where inability to reach or locate a nonsigning inventor is alleged, petitioner is required to establish that diligent effort was made to locate the nonsigning inventor. Petitioner has not established that diligent effort has been made to locate the nonsigning inventor for presentation of the application papers.

Any renewed petition must be supported by evidence that sufficiently establishes that despite diligent effort, the nonsigning inventor cannot be located. A statement of facts should be submitted that fully describes the exact facts that are relied on to establish that a *diligent effort* was made to locate the nonsigning inventor. The statement of facts must be signed, where at all possible, by a person having *firsthand*

knowledge of the facts recited therein. Statements based on hearsay, will not normally be accepted. At the very least, a search of the internet, human resource records, telephone directories, etc. should be undertaken in regions where it is suspected the nonsigning inventor may reside. Petitioner should reference and supply evidence of any such searches in a renewed petition. *See*, MPEP 409.03(d).

Petitioner, further, must establish proof of proprietary interest as the record is devoid of an assignment record and 3.73(b) statement. Any renewed petition must be accompanied by evidence to sufficiently establish that (1) that the invention has been assigned to assignee or (2) that the inventor has agreed in writing to assign the invention to assignee or (3) otherwise demonstrate a proprietary interest in the subject matter of the application.

Further, petitioner must submit a supplemental oath or declaration executed on behalf of the non-signing inventor by a party with sufficient proprietary interest.

The time period for reply to the Notice of Allowance remains as set forth therein.

Petitioner is given **TWO MONTHS** from the mailing date of this decision to reply, correcting the deficiencies noted herein. Any reply should be entitled "Request for Reconsideration of Petition Under 37 CFR 1.183," and should only address the deficiencies noted herein. Except, the reply may include a supplemental oath or declaration executed by the inventor.

Further correspondence with respect to this matter should be addressed as follows:

By mail: Mail Stop Petition
Commissioner for Patents
P.O. Box 1450
Alexandria, VA 22313-1450

By facsimile: (571) 273-8300

By hand: U.S. Patent and Trademark Office
Customer Service Window
Mail Stop Petition
Randolph Building
401 Dulany Street
Alexandria, VA 22314

Telephone inquiries regarding this decision should be directed to the undersigned at (571) 272-3205.

Alesia M. Brown
Petitions Attorney
Office of Petitions

UNITED STATES PATENT AND TRADEMARK OFFICE

COMMISSIONER FOR PATENTS
UNITED STATES PATENT AND TRADEMARK OFFICE
P.O. BOX 1450
ALEXANDRIA, VA 22313-1450
www.uspto.gov

Norris, McLaughlin & Marcus P.A.
18th Floor
875 Third Avenue
New York NY 10022

COPY MAILED

JUN 21 2007

OFFICE OF PETITIONS

In re Application of	:
McCarthy	: DECISION
Application No.: 29/258,624	:
Filed: April 25, 2006	:
Docket No.: 102792-579	:
(11310D4 US/2)	:

This decision is in response to the renewed petition under 37 CFR 1.183, filed February 7, 2007.

The petition is hereby **DISMISSED AS MOOT**.

The inventor, previously unavailable, has now executed the substitute declaration. Thus, consideration under 37 CFR 1.183 is no longer at issue.

This application is being forwarded to the Technology Center (TC) as the PALM database indicates the TC is awaiting applicant's response, presumably the substitute declaration.

Telephone inquiries regarding this decision should be directed to the undersigned at (571) 272-3205.

Alesia M. Brown
Petitions Attorney
Office of Petitions

PTO/SB/27 (05-03)
Approved for use through 04/30/2003. OMB 0651-0031
U.S. Patent and Trademark Office; U.S. DEPARTMENT OF COMMERCE
Under the Paperwork Reduction Act of 1995, no persons are required to respond to a collection of information unless it displays a valid OMB control number.

REQUEST FOR EXPEDITED EXAMINATION OF A DESIGN APPLICATION (37 CFR 1.155)

Application Number	TBD
Filing Date	Herewith
First Named Inventor	Frederick J. Dojan et al.
Title	Portion Of A Shoe Midsole
Atty Docket Number	015127.00663

113900 U.S. PTO
29/258633
042606

HAND DELIVER TO THE DESIGN GROUP DIRECTOR'S OFFICE
-or- ADDRESS TO:
MAIL STOP EXPEDITED DESIGN
COMMISSIONER FOR PATENTS
P.O. Box 1450
Alexandria, VA 22313-1450

This is a request for expedited examination of a design application under 37 CFR 1.155.

NOTE: If the Request made by this form accompanies original application papers, include form PTO/SB/18 "Design Patent Application Transmittal" or its equivalent.

A preexamination search was conducted. The field of search was:

D2/896, 902, 907, 908, 943, 944, 946, 947, 964, 967, 972 and 977

Related applications: _____

If not previously filed for the above-identified application, the following items required by 37 CFR 1.155 are enclosed:

04/27/2006 MBIZUNES 00000066 190733 29258633
01 FC:1802 900.00 DA

Formal drawings (see 37 CFR 1.84).

The fee set forth in 37 CFR 1.17(k).

An information disclosure statement in compliance with 37 CFR 1.98.

Approved
Jacqueline M. Stone
Jacqueline M. Stone, Director
Technology Center 1700/2900
5-16-06

April 26, 2006
Date

Signature

202-824-3000
Telephone Number

Anthony W. Kandare, Reg. No. 48,830
Typed or printed name

WARNING: Information on this form may become public. Credit card information should not be included on this form. Provide credit card information and authorization on PTO-2038.

This collection of information is required by 37 CFR 1.155. The information is required to obtain or retain a benefit by the public which is to file (and by the USPTO to process) an application. Confidentiality is governed by 35 U.S.C. 122 and 37 CFR 1.14. This collection is estimated to take 6 minutes to complete, including gathering, preparing, and submitting the completed application form to the USPTO. Time will vary depending upon the individual case. Any comments on the amount of time you require to complete this form and/or suggestions for reducing this burden, should be sent to the Chief Information Officer, U.S. Patent and Trademark Office, U.S. Department of Commerce, P.O. Box 1450, Alexandria, VA 22313-1450. DO NOT SEND FEES OR COMPLETED FORMS TO THIS ADDRESS. SEND TO: Mail Stop Expedited Design, Commissioner for Patents, P.O. Box 1450, Alexandria, VA 22313-1450.

If you need assistance in completing the form, call 1-800-PTO-9199 and select option 2.

PTO/SB/27 (05-03)
Approved for use through 04/30/2003. OMB 0651-0031
U.S. Patent and Trademark Office; U.S. DEPARTMENT OF COMMERCE
Under the Paperwork Reduction Act of 1995, no persons are required to respond to a collection of information unless it displays a valid OMB control number.

REQUEST FOR EXPEDITED EXAMINATION OF A DESIGN APPLICATION (37 CFR 1.155)

Application Number	TBD
Filing Date	Herewith
First Named Inventor	Frederick J. Dojan et al.
Title	Portion Of A Shoe Midsole
Atty Docket Number	015127.00665

113000 U.S. PTO
29/258634
042606

HAND DELIVER TO THE DESIGN GROUP DIRECTOR'S OFFICE
-or- ADDRESS TO:
MAIL STOP EXPEDITED DESIGN
COMMISSIONER FOR PATENTS
P.O. Box 1450
Alexandria, VA 22313-1450

This is a request for expedited examination of a design application under 37 CFR 1.155.

NOTE: If the Request made by this form accompanies original application papers, include form PTO/SB/18 "Design Patent Application Transmittal" or its equivalent.

A preexamination search was conducted. The field of search was:

D2/896, 902, 907, 908, 943, 944, 946, 947, 964, 967, 972 and 977

Related applications: _____

If not previously filed for the above-identified application, the following items required by 37 CFR 1.155 are enclosed:

Formal drawings (see 37 CFR 1.84).

The fee set forth in 37 CFR 1.17(k).

An information disclosure statement in compliance with 37 CFR 1.98.

04/27/2006 MBIZUNES 00000067 190733 29258634
01 FC:1802 900.00 DA

Approved
Jacqueline M. Stone
Jacqueline M. Stone, Director
Technology Center 1700/2900
5-16-06

April 26, 2006
Date

Anthony W. Kandare
Signature

202-824-3000
Telephone Number

Anthony W. Kandare, Reg. No. 48,830
Typed or printed name

WARNING: Information on this form may become public. Credit card information should not be included on this form. Provide credit card information and authorization on PTO-2038.

This collection of information is required by 37 CFR 1.155. The information is required to obtain or retain a benefit by the public which is to file (and by the USPTO to process) an application. Confidentiality is governed by 35 U.S.C. 122 and 37 CFR 1.14. This collection is estimated to take 6 minutes to complete, including gathering, preparing, and submitting the completed application form to the USPTO. Time will vary depending upon the individual case. Any comments on the amount of time you require to complete this form and/or suggestions for reducing this burden, should be sent to the Chief Information Officer, U.S. Patent and Trademark Office, U.S. Department of Commerce, P.O. Box 1450, Alexandria, VA 22313-1450. DO NOT SEND FEES OR COMPLETED FORMS TO THIS ADDRESS. SEND TO: Mail Stop Expedited Design, Commissioner for Patents, P.O. Box 1450, Alexandria, VA 22313-1450.

If you need assistance in completing the form, call 1-800-PTO-9199 and select option 2.

PTO/SB/27 (05-03)
Approved for use through 04/30/2003. OMB 0651-0031
U.S. Patent and Trademark Office; U.S. DEPARTMENT OF COMMERCE
Under the Paperwork Reduction Act of 1995, no persons are required to respond to a collection of information unless it displays a valid OMB control number.

REQUEST FOR EXPEDITED EXAMINATION OF A DESIGN APPLICATION (37 CFR 1.155)

Application Number	TBD
Filing Date	Herewith
First Named Inventor	Frederick J. Dojan et al.
Title	Portion Of A Shoe Midsole
Atty Docket Number	015127.00664

HAND DELIVER TO THE DESIGN GROUP DIRECTOR'S OFFICE
-or- ADDRESS TO:
MAIL STOP EXPEDITED DESIGN
COMMISSIONER FOR PATENTS
P.O. Box 1450
Alexandria, VA 22313-1450

113000 U.S. PTO
29/258635
042606

This is a request for expedited examination of a design application under 37 CFR 1.155.

NOTE: If the Request made by this form accompanies original application papers, include form PTO/SB/18 "Design Patent Application Transmittal" or its equivalent.

A preexamination search was conducted. The field of search was:

D2/896, 902, 907, 908, 943, 944, 946, 947, 964, 967, 972 and 977

Related applications: _____

If not previously filed for the above-identified application, the following items required by 37 CFR 1.155 are enclosed:

04/27/2006 MBIZUNES 00000068 190733 29258635
01 FC:1802 900.00 DA

Formal drawings (see 37 CFR 1.84).

The fee set forth in 37 CFR 1.17(k).

An information disclosure statement in compliance with 37 CFR 1.98.

Approved
Jacqueline M. Stone
Jacqueline M. Stone, Director
Technology Center 1700/2900
5-16-06

April 26, 2006
Date

Signature

202-824-3000
Telephone Number

Anthony W. Kandare, Reg. No. 48,830
Typed or printed name

WARNING: Information on this form may become public. Credit card information should not be included on this form. Provide credit card information and authorization on PTO-2038.

This collection of information is required by 37 CFR 1.155. The information is required to obtain or retain a benefit by the public which is to file (and by the USPTO to process) an application. Confidentiality is governed by 35 U.S.C. 122 and 37 CFR 1.14. This collection is estimated to take 6 minutes to complete, including gathering, preparing, and submitting the completed application form to the USPTO. Time will vary depending upon the individual case. Any comments on the amount of time you require to complete this form and/or suggestions for reducing this burden, should be sent to the Chief Information Officer, U.S. Patent and Trademark Office, U.S. Department of Commerce, P.O. Box 1450, Alexandria, VA 22313-1450. DO NOT SEND FEES OR COMPLETED FORMS TO THIS ADDRESS. SEND TO: Mail Stop Expedited Design, Commissioner for Patents, P.O. Box 1450, Alexandria, VA 22313-1450.

If you need assistance in completing the form, call 1-800-PTO-9199 and select option 2.

PTO/SB/27 (05-03)
Approved for use through 04/30/2003. OMB 0651-0031
U.S. Patent and Trademark Office; U.S. DEPARTMENT OF COMMERCE
Under the Paperwork Reduction Act of 1995, no persons are required to respond to a collection of information unless it displays a valid OMB control number.

17264 U.S.PTO
042606

REQUEST FOR EXPEDITED EXAMINATION OF A DESIGN APPLICATION (37 CFR 1.155)

Application Number	TBD
Filing Date	Herewith
First Named Inventor	Frederick J. Dojan et al.
Title	Portion Of A Shoe Midsole
Atty Docket Number	015127.00666

13000 U.S.PTO
29/258636
042606

HAND DELIVER TO THE DESIGN GROUP DIRECTOR'S OFFICE
-or- ADDRESS TO:
MAIL STOP EXPEDITED DESIGN
COMMISSIONER FOR PATENTS
P.O. Box 1450
Alexandria, VA 22313-1450

This is a request for expedited examination of a design application under 37 CFR 1.155.

NOTE: If the Request made by this form accompanies original application papers, include form PTO/SB/18 "Design Patent Application Transmittal" or its equivalent.

A preexamination search was conducted. The field of search was:

D2/896, 902, 907, 908, 943, 944, 946, 947, 964, 967, 972 and 977

Related applications: _____

If not previously filed for the above-identified application, the following items required by 37 CFR 1.155 are enclosed:

Formal drawings (see 37 CFR 1.84).

The fee set forth in 37 CFR 1.17(k).

An information disclosure statement in compliance with 37 CFR 1.98.

04/27/2006 MBIZUNES 00000069 190733 29258636
01 FC:1802 900.00 DA

Approved
Jacqueline M. Stone
Jacqueline M. Stone, Director
Technology Center 1700/2900
5-16-06

April 26, 2006
Date

Anthony W. Kandare
Signature

202-824-3000
Telephone Number

Anthony W. Kandare, Reg. No. 48,830
Typed or printed name

WARNING: Information on this form may become public. Credit card information should not be included on this form. Provide credit card information and authorization on PTO-2038.

This collection of information is required by 37 CFR 1.155. The information is required to obtain or retain a benefit by the public which is to file (and by the USPTO to process) an application. Confidentiality is governed by 35 U.S.C. 122 and 37 CFR 1.14. This collection is estimated to take 6 minutes to complete, including gathering, preparing, and submitting the completed application form to the USPTO. Time will vary depending upon the individual case. Any comments on the amount of time you require to complete this form and/or suggestions for reducing this burden, should be sent to the Chief Information Officer, U.S. Patent and Trademark Office, U.S. Department of Commerce, P.O. Box 1450, Alexandria, VA 22313-1450. DO NOT SEND FEES OR COMPLETED FORMS TO THIS ADDRESS. SEND TO: Mail Stop Expedited Design, Commissioner for Patents, P.O. Box 1450, Alexandria, VA 22313-1450.

If you need assistance in completing the form, call 1-800-PTO-9199 and select option 2.

UNITED STATES PATENT AND TRADEMARK OFFICE

Commissioner for Patents
United States Patent and Trademark Office
P.O. Box 1450
Alexandria, VA 22313-1450
www.uspto.gov

EMERY L. TRACY
P O BOX 1518
BOULDER, CO 80306

COPY MAILED

JAN 17 2007

OFFICE OF PETITIONS

In re Application of	:	
Gary Doughty	:	
Application No. 29/258,659	:	DECISION GRANTING PETITION
Filed: April 25, 2006	:	UNDER 37 CFR 1.137(b)
Attorney Docket No. J003.PAT-2	:	

This is a decision on the petition under 37 CFR 1.137(b), filed November 3, 2006, to revive the above-identified application.

The petition is **GRANTED**.

The above-identified application became abandoned for failure to timely submit corrected replacement drawings on or before September 13, 2006, as required by the Notice of Allowability mailed June 13, 2006. Accordingly, the above-identified application became abandoned on September 14, 2006.

The petition satisfies the conditions for revival pursuant to the provisions of 37 CFR 1.137(b) in that (1) the reply (replacement drawings (1 sheet containing Figures 1-4)), (2) the $750 petition fee, (3) the required statement of unintentional delay, and (4) a terminal disclaimer and fee as required by 37 CFR 1.137(d) have been received. Accordingly, the failure to timely submit corrected replacement drawings is accepted is accepted as having been unintentionally delayed.

The terminal disclaimer filed on November 13, 2006 is accepted and has been made of record in the file.

Telephone inquiries concerning this decision should be directed to the undersigned at (571) 272-3218.

This matter is being referred to Publishing Division for appropriate action in accordance with this decision reviving the application.

Frances Hicks
Petitions Examiner
Office of Petitions

UNITED STATES PATENT AND TRADEMARK OFFICE

Commissioner for Patents
United States Patent and Trademark Office
P.O. Box 1450
Alexandria, VA 22313-1450
www.uspto.gov
DIW Feb-07

SHEPPARD, MULLIN, RICHTER & HAMPTON LLP
333 SOUTH HOPE STREET
48TH FLOOR
LOS ANGELES CA 90071-1448

COPY MAILED

FEB 12 2007

OFFICE OF PETITIONS

In re Application of	:	
Chau et al.	:	DECISION ACCORDING STATUS
Application No. 29/258,778	:	UNDER 37 CFR 1.47(a)
Filed: 25 April, 2006	:	
Atty Docket No. 0SEM-123979	:	

This is in response to the petition under 37 CFR 1.47(a), filed on 21 November, 2006.

Petitioners have shown that the non-signing inventors, Brian Wood and Siu Cheong Hon, have refused to join in the filing of the above-identified application after having been sent a copy of the application, via their counsel. Specifically, the petitioners have established, that copy of the design application was sent to counsel for each of the non-signing inventors. The non-signing inventors, however, have failed to return the executed declaration naming them as joint inventors along with Nam Wai Chau.

The above-identified application and papers have been reviewed and found in compliance with 37 CFR 1.47(a). This application is hereby accorded Rule 1.47(a) status.

As provided in Rule 1.47(c), this Office will forward notice of this application's filing to the non-signing inventor at the address given in the declaration. Notice of the filing of this application will also be published in the Official Gazette.

The application will be referred to Technology Center Art Unit 2913 for examination in due course.

Telephone inquiries related to this decision should be directed to the undersigned at 571-272-3231.

D Wood
Douglas I. Wood
Senior Petitions Attorney
Office of Petitions

UNITED STATES PATENT AND TRADEMARK OFFICE

Commissioner for Patents
United States Patent and Trademark Office
P.O. Box 1450
Alexandria, VA 22313-1450
www.uspto.gov

Paper No.

VICTOR ALAN HENZI
ROBERT BOSCH CORPORATION
2800 SOUTH 25TH AVENUE
BROADVIEW IL 60155

COPY MAILED

JAN 07 2008

OFFICE OF PETITIONS

In re Application of	:	
Oles et al.	:	DECISION ON
Application No. 29/258,808	:	PETITION
Filed: April 27, 2006	:	
Atty Docket No. 2005/7009	:	

This is a decision on the PETITION FOR REVIVAL OF AN APPLICATION FOR PATENT ABANDONED UNINTENTIONALLY UNDER 37 CFR 1.137(b) filed September 26, 2007.

The petition is **GRANTED**.

The above-identified application became abandoned effective July 12, 2007 for failure to timely pay the issue fee as required by the Notice of Allowance and Fee(s) Due mailed April 11, 2007. The Notice set a three-month non-extendable period for transmitting the fee. A courtesy Notice of Abandonment was mailed on August 8, 2007.

In response, applicants filed the instant petition. The petition includes the required reply[1] in the form of payment of the issue fee, the required statement of unintentional delay, payment of the petition fee and a terminal disclaimer (and disclaimer fee). All requirements of 37 CFR 1.137(b) have been met.

[1] There was no distinct but concurrent requirement for new drawings. There was no requirement for payment of a publication fee.

A change of correspondence address was filed on October 1, 2007 and has been made of record.

The application is being forwarded to the Publishing Division for processing into a patent.

Telephone inquiries related to this decision should be directed to the undersigned at (571) 272-3219.

Nancy Johnson
Senior Petitions Attorney
Office of Petitions

UNITED STATES PATENT AND TRADEMARK OFFICE

Commissioner for Patents
United States Patent and Trademark Office
P.O. Box 1450
Alexandria, VA 22313-1450
www.uspto.gov

ERIC D. COHEN
22ND FLOOR
120 SOUTH RIVERSIDE PLAZA
CHICAGO IL 60606-3945

COPY MAILED

FEB 29 2008

OFFICE OF PETITIONS

In re Application of
Wayne Richard Biggs
Application No. 29/258,840
Filed: April 27, 2006
Attorney Docket No. 96852

DECISION GRANTING PETITION
UNDER 37 CFR 1.137(b)

This is a decision on the petition under 37 CFR 1.137(b), filed June 14, 2007, to revive the above-identified application.

The petition is **GRANTED**.

The petition satisfies the conditions for revival pursuant to the provisions of 37 CFR 1.137(b) in that (1) the reply in the form of an CPA and Terminal Disclaimer; (2) the petition fee; and (3) the required statement of unintentional delay have been received. Accordingly, the reply to the Notice of Allowance of October 6, 2006, is accepted as having been unintentionally delayed.

Telephone inquiries concerning this decision should be directed to the undersigned at (571) 272-3208.

This matter is being referred to Technology Center AU 2912 for the mailing of the Notice of Allowance of July 12, 2007.

Karen Creasy

Karen Creasy
Petitions Examiner
Office of Petitions

UNITED STATES PATENT AND TRADEMARK OFFICE

UNITED STATES DEPARTMENT OF COMMERCE
United States Patent and Trademark Office
Address: COMMISSIONER FOR PATENTS
P.O. Box 1450
Alexandria, Virginia 22313-1450
www.uspto.gov

APPLICATION NO.	FILING DATE	FIRST NAMED INVENTOR	ATTORNEY DOCKET NO.	CONFIRMATION NO.
29/258,840	04/27/2006	Wayne Richard Biggs	96852	9362

7590 10/28/2008

Eric D. Cohen
22nd Floor
120 South Riverside Plaza
Chicago, IL 60606-3945

EXAMINER
SIEGEL, MITCHELL

ART UNIT	PAPER NUMBER
2912	

MAIL DATE	DELIVERY MODE
10/28/2008	PAPER

DECISION DISMISSING PETITION UNDER 37 CFR 1.138(d)

The declaration of express abandonment will not be recognized

This is in response to the petition under 37 CFR 1.138(d), requesting for a refund of any previously paid search fee and excess claims fee in the above-identified application.

The petition is dismissed.

The express abandonment will **not** be recognized for the reason(s) indicated below:

1. ☒ The petition was not filed in sufficient time to permit the appropriate officials to recognize the abandonment before an examination has been made of the application. See 37 CFR 1.138(d).
2. ☐ The petition was not signed by a party authorized by 37 CFR 1.33(b)(1), (3) or (4).
3. ☐ The application is not an application filed under 35 U.S.C. 111(a) on or after December 8, 2004.
4. ☐ The petition for express abandonment under 1.138(d) is dismissed because the applicant did not pay any search fee and excess claims fees in the above-identified application.

Telephone inquiries should be directed to the Office of Data Management at (571) 272-4200.

Betty Powell

Patent Publication Branch
Office of Data Management

FORM PET651D (Rev. 08/07)

PTO/SB/27 (09-04)
Approved for use through 07/31/2006. OMB 0651-0031
U.S. Patent and Trademark Office; U.S DEPARTMENT OF COMMERCE
Under the Paperwork Reduction ACT of 1995, no persons are required to respond to collection of information unless it displays a valid OMB control number.

REQUEST FOR EXPEDITED EXAMINATION OF A DESIGN APPLICATION (37 CFR 1.155)

Application Number	Not Yet Assigned
Filing Date	Herewith
First Named Inventor	Dayan
Title	MONITOR AND HOLDER FOR CAMERA DEVICES
Atty Docket Number	INT245-236253-2

ADDRESS TO:

MAIL STOP EXPEDITED DESIGN
COMMISSIONER FOR PATENTS
P.O. Box 1450
Alexandria, VA 22313-1450

This is a request for expedited examination of a design application under 37 CFR 1.155.

NOTE: If the Request made by this form accompanies original application papers, include form PTO/SB/18 "Design Patent Application Transmittal" or its equivalent.

A preexamination search was conducted. The field of search was:

Class D14 subclasses 305, 341, 371, 375, 376, 380, 381; Class D16 subclasses 202 (monitor or display or LCD) and 203; Class D14 and camera and support

Related applications: _____

If not previously filed for the above-identified application, the following items required by 37 CFR 1.155 are enclosed:

- Formal drawings (see 37 CFR 1.84).
- The fee set forth in 37 CFR 1.17(k).
- An information disclosure statement in compliance with 37 CFR 1.98.

Approved 5-16-06
Jacqueline M. Stone
Jacqueline M. Stone, Director
Technology Center 1700/2900

Brian L. Belles
Signature

April 28, 2006
Date

Brian L. Belles
Typed or printed name

51,322
Registration Number, if applicable

215-977-2127
Telephone Number

WARNING: Information on this form may become public. Credit card information should not be included on this form. Provide credit card information and authorization on PTO-2038.

This collection of information is required by 37 CFR 1.155. The information is required to obtain or retain a benefit by the public which is to file (and by the USPTO to process) an application. Confidentiality is governed by 35 U.S.C. 122 and 37 CFR 1.11 and 1.14. This collection is estimated to take 6 minutes to complete, including gathering, preparing, and submitting the completed application form to the USPTO. Time will vary depending upon the individual case. Any comments on the amount of time you require to complete this form and/or suggestions for reducing this burden, should be sent to the Chief Information Officer, U.S. Patent and Trademark Office, U.S. Department of Commerce, P.O. Box 1450, Alexandria, VA 22313-1450. DO NOT SEND FEES OR COMPLETED FORMS TO THIS ADDRESS. SEND TO: Commissioner for Patents, P.O. Box 1450, Alexandria, VA 22313-1450.

If you need assistance in completing the form, call 1-800-PTO-9199 and select option 2.

113000 U.S.PTO
29/258861
042806
05/02/2006 SDIRETA1 00000078 29258861
01 FC:1002 900.00 OP

SPE RESPONSE FOR CERTIFICATE OF CORRECTION

Paper No.: _____

DATE : 03/27/07

TO SPE OF : ART UNIT 2916

SUBJECT : Request for Certificate of Correction for Appl. No.: **29/258861** Patent No.: **d536016**

Please respond to this request for a certificate of correction within 7 days.

Please review the requested changes/corrections as shown in the **COCIN** document(s) in the IFW application image. No new matter should be introduced, nor should the scope or meaning of the claims be changed.

Please complete the response (see below) and forward the completed response to scanning using document code **COCX**.

Angela Green
Certificates of Correction Branch
703.308.9380 ext. 123

Thank You For Your Assistance

The request for issuing the above-identified correction(s) is hereby:
Note your decision on the appropriate box.

- ☒ **Approved** — **All** changes apply.
- ☐ **Approved in Part** — Specify below which changes **do not** apply.
- ☐ **Denied** — State the reasons for denial below.

Comments: _____

IAN SIMMONS
SUPERVISORY PATENT EXAMINER

SPE

2916
Art Unit

PTO/SB/27 (05-03)
Approved for use through 04/30/2003. OMB 0651-0031
U.S. Patent and Trademark Office; U.S DEPARTMENT OF COMMERCE
Under the Paperwork Reduction ACT of 1995, no persons are required to respond to collection of information unless it displays a valid OMB control number.

REQUEST FOR EXPEDITED EXAMINATION OF A DESIGN APPLICATION (37 CFR 1.155)		
	Application Number	Not Yet Assigned
	Filing Date	Not Yet Assigned
	First Named Inventor	ARMINAK, Armin
	Title	PUMP ACTUATOR
	Atty Docket Number	06-16583

HAND DELIVER TO THE DESIGN GROUP DIRECTOR'S OFFICE
-or- ADDRESS TO:
MAIL STOP EXPEDITED DESIGN
COMMISSIONER FOR PATENTS
P.O. Box 1450
Alexandria, VA 22313-1450

05/02/2006 SDIRETA1 00000077 29258862
01 FC:1802 900.00 OP
02 FC:2012 100.00 OP
03 FC:2312 80.00 OP
04 FC:2313 65.00 OP

113006 U.S. PTO
29/258862
042806

This is a request for expedited examination of a design application under 37 CFR 1.155.

NOTE: If the Request made by this form accompanies original application papers, include form PTO/SB/18 "Design Patent Application Transmittal" or its equivalent.

A preexamination search was conducted. The field of search was:

CLASS/SUBCLASS: 239/343; 222/145.6, 190; D09/448

5-16-06
Approved
Jacqueline M. Stone
Jacqueline M. Stone, Director
Technology Center 1700/2900

Related applications:

If not previously filed for the above-identified application, the following items required by 37 CFR 1.155 are enclosed:

Formal drawings (see 37 CFR 1.84).
The fee set forth in 37 CFR 1.17(k).
An information disclosure statement in compliance with 37 CFR 1.98.

4-27-06
Date

Signature

(310) 451-0647
Telephone Number

Daniel M. Cislo, Esq.
Typed or printed name

WARNING: Information on this form may become public. Credit card information should not be included on this form. Provide credit card information and authorization on PTO-2038.

This collection of information is required by 37 CFR 1.155. The information is required to obtain or retain a benefit by the public which is to file (and by the USPTO to process) an application. Confidentiality is governed by 35 U.S.C. 122 and 37 CFR 1.14. This collection is estimated to take 6 minutes to complete, including gathering, preparing, and submitting the completed application form to the USPTO. Time will vary depending upon the individual case. Any comments on the amount of time you require to complete this form and/or suggestions for reducing this burden, should be sent to the Chief Information Officer, U.S. Patent and Trademark Office, U.S. Department of Commerce, P.O. Box 1450, Alexandria, VA 22313-1450. DO NOT SEND FEES OR COMPLETED FORMS TO THIS ADDRESS. SEND TO: Mail Stop Expedited Design, Commissioner for Patents, P.O. Box 1450, Alexandria, VA 22313-1450.

If you need assistance in completing the form, call 1-800-PTO-9199 and select option 2.

1802

PTO/SB/27 (09-04)
Approved for use through 07/31/2006. OMB 0651-0031
U.S. Patent and Trademark Office; U.S DEPARTMENT OF COMMERCE
Under the Paperwork Reduction ACT of 1995, no persons are required to respond to collection of information unless it displays a valid OMB control number.

REQUEST FOR EXPEDITED EXAMINATION OF A DESIGN APPLICATION (37 CFR 1.155)

Application Number	Not Yet Assigned
Filing Date	Herewith
First Named Inventor	Dayan
Title	BACK-UP CAMERA
Atty Docket Number	INT245-236253-1

ADDRESS TO:
MAIL STOP EXPEDITED DESIGN
COMMISSIONER FOR PATENTS
P.O. Box 1450
Alexandria, VA 22313-1450

05/02/2006 SDIRETA1 00000076 29258863
01 FC:1802 900.00 OP

113006 U.S. PTO
29/258863
042806

This is a request for expedited examination of a design application under 37 CFR 1.155.

NOTE: If the Request made by this form accompanies original application papers, include form PTO/SB/18 "Design Patent Application Transmittal" or its equivalent.

A preexamination search was conducted. The field of search was:

Class D14 subclasses 305, 341, 371, 375, 376, 380, 381; Class D16 subclasses 202 (monitor or display or LCD) and 203; Class D14 and camera and support

Related applications: _____

If not previously filed for the above-identified application, the following items required by 37 CFR 1.155 are enclosed:

- Formal drawings (see 37 CFR 1.84).
- The fee set forth in 37 CFR 1.17(k).
- An information disclosure statement in compliance with 37 CFR 1.98.

Approved 5-16-06
Jacqueline M. Stone
Jacqueline M. Stone, Director
Technology Center 1700/2900

Signature	April 28, 2006 — Date
Brian L. Belles — Typed or printed name	51,322 — Registration Number, if applicable
(215) 977-2127 — Telephone Number	

WARNING: Information on this form may become public. Credit card information should not be included on this form. Provide credit card information and authorization on PTO-2038.

This collection of information is required by 37 CFR 1.155. The information is required to obtain or retain a benefit by the public which is to file (and by the USPTO to process) an application. Confidentiality is governed by 35 U.S.C. 122 and 37 CFR 1.11 and 1.14. This collection is estimated to take 6 minutes to complete, including gathering, preparing, and submitting the completed application form to the USPTO. Time will vary depending upon the individual case. Any comments on the amount of time you require to complete this form and/or suggestions for reducing this burden, should be sent to the Chief Information Officer, U.S. Patent and Trademark Office, U.S. Department of Commerce, P.O. Box 1450, Alexandria, VA 22313-1450. DO NOT SEND FEES OR COMPLETED FORMS TO THIS ADDRESS. SEND TO: Commissioner for Patents, P.O. Box 1450, Alexandria, VA 22313-1450.

If you need assistance in completing the form, call 1-800-PTO-9199 and select option 2.

UNITED STATES PATENT AND TRADEMARK OFFICE

Commissioner for Patents
United States Patent and Trademark Office
P.O. Box 1450
Alexandria, VA 22313-1450
www.uspto.gov

PHILIP S. JOHNSON
JOHNSON & JOHNSON
ONE JOHNSON & JOHNSON PLAZA
NEW BRUNSWICK, NJ 08933-7003

COPY MAILED

APR 2 2 2009

OFFICE OF PETITIONS

In re Application of	:	
Frank A.W. Coumans, et al.	:	
Application No. 29/258,927	:	ON PETITION
Filed: April 28, 2006	:	
Attorney Docket No. IMMC D4	:	

This is a decision on the petition, filed February 20, 2009, to revive the above-identified application under 37 CFR 1.137(b).

The petition is **DISMISSED**.

Any request for reconsideration of this decision must be submitted within TWO (2) MONTHS from the mail date of this decision. Extensions of time under 37 CFR 1.136(a) are permitted. The reconsideration request should include a cover letter entitled "Renewed Petition under 37 CFR 1.137(b)." This is **not** a final agency action within the meaning of 5 U.S.C. § 704.

This application became abandoned for failure to timely pay the issue fee on or before May 12, 2008, as required by the Notice of Allowance and Fee(s) Due mailed February 12, 2008 . A Notice of Abandonment was mailed on August 20, 2008. On February 20, 2009, the present petition was filed.

A grantable petition under 37 CFR 1.137(b)[1] must be accompanied by: (1) the required reply,[2] unless previously filed; (2) the petition fee as set forth in 37 CFR 1.17(m); (3) a statement that the entire delay in filing the required reply from the due date for the reply until the filing of a grantable petition pursuant to 37 CFR 1.137(b) was unintentional; and (4) any terminal disclaimer (and fee as set forth in 37 CFR 1.20(d)) required by 37 CFR 1.137(c). Where there is a question as to whether either the abandonment or the delay in filing a petition under 37 CFR 1.137 was unintentional, the Director may require additional information. See MPEP 711.03(c)(II)(C) and (D).

[1] As amended effective December 1, 1997. See Changes to Patent Practice and Procedure; Final Rule Notice, 62 Fed. Reg. 53131, 53194-95 (October 10, 1997), 1203 Off. Gaz. Pat. Office 63, 119-20 (October 21, 1997).

[2] In a nonprovisional application abandoned for failure to prosecute, the required reply may be met by the filing of a continuing application. In an application or patent, abandoned or lapsed for failure to pay the issue fee or any portion thereof, the required reply must be the payment of the issue fee or any outstanding balance thereof.

The petition lacks item (4) above. Since the above-identified application is a design application, 37 CFR 1.137(d) requires a terminal disclaimer dedicating to the public a terminal part of the term of any patent granted thereon equivalent to the period of abandonment of the application and the terminal disclaimer must also apply to any patent granted on a continuing design application that contains a specific reference under 35 U.S.C. 120, 121, or 365(c) to the application for which revival is sought. The period of abandonment will be computed to be the number of months from the date of abandonment to the date of filing a grantable petition. To be effective, the terminal disclaimer must include the fee of $140 ($70 if small entity) pursuant to 37 CFR 1.20(d) and be signed in accordance with 37 CFR 1.33(b). If the terminal disclaimer is signed by an assignee, the assignee must comply with the requirements of 37 CFR 3.73(b).

Further correspondence with respect to this matter should be delivered through one of the following mediums:

By mail: Mail Stop PETITIONS
Commissioner for Patents
Post Office Box 1450
Alexandria, VA 22313-1450

By hand: Customer Service Window
Mail Stop Petitions
Randolph Building
401 Dulany Street
Alexandria, VA 22314

By fax: (571) 273-8300
ATTN: Office of Petitions

By Internet: EFS-Web[3]

Any questions concerning this matter may be directed to the undersigned at (571) 272-3204.

Sherry D. Brinkley
Petitions Examiner
Office of Petitions

[3] www.uspto.gov/ebc/efs_help.html (for help using EFS-Web call the Patent Electronic Business Center at (866) 217-9197)

UNITED STATES PATENT AND TRADEMARK OFFICE

Commissioner for Patents
United States Patent and Trademark Office
P.O. Box 1450
Alexandria, VA 22313-1450
www.uspto.gov

PHILIP S. JOHNSON
JOHNSON & JOHNSON
ONE JOHNSON & JOHNSON PLAZA
NEW BRUNSWICK, NJ 08933-7003

MAILED

AUG 19 2009

OFFICE OF PETITIONS

In re Application of
Frank A.W. Coumans, et al.
Application No. 29/258,927
Filed: April 28, 2006
Attorney Docket No. VDX5129USDP

ON PETITION

This is a decision on the renewed petition under 37 CFR 1.137(b), filed June 20, 2009, to revive the above-identified design application.

The petition is **GRANTED**.

The application became abandoned for failure to timely pay the issue fee on or before May 12, 2008, as required by the Notice of Allowance and Fee(s) Due, mailed February 12, 2008, which set a statutory period for reply of three (3) months. Accordingly, the application became abandoned on May 13, 2008. A Notice of Abandonment was mailed on August 20, 2008. On February 20, 2009, a petition under 37 CFR 1.137(b) was filed; however, the petition was dismissed in a decision mailed April 22, 2009. On June 20, 2009, the present petition was filed.

The petition satisfies the requirements of 37 CFR 1.137(b) in that petitioner has supplied (1) the reply in the form of the $860 issue fee, (2) the petition fee of $1,620, (3) an adequate statement of unintentional delay, and (4) a terminal disclaimer and fee as required by 37 CFR 1.137(d). Accordingly, the failure to timely pay the issue fee as required by the Notice of February 12, 2008 is accepted as being unintentionally delayed.

The terminal disclaimer filed June 20, 2009 is accepted and has been made of record. Any continuing application filed from this application must contain a copy of the terminal disclaimer. The copy of the terminal disclaimer must be filed with a cover letter requesting the terminal disclaimer be recorded on the continuing application. A copy of this decision should be attached to the cover letter.

The application is being referred to the Office of Data Management to be processed into a patent.

Telephone inquires related to this decision should be directed to the undersigned at (571) 272-3204. Telephone inquiries related to processing as a patent should be directed to (571) 272-4200.

Sherry D. Brinkley
Petitions Examiner
Office of Petitions

UNITED STATES PATENT AND TRADEMARK OFFICE

COMMISSIONER FOR PATENTS
UNITED STATES PATENT AND TRADEMARK OFFICE
P.O. BOX 1450
ALEXANDRIA, VA 22313-1450
WWW.USPTO.GOV

Paper No. None

COPY MAILED

JUN 21 2007

OFFICE OF PETITIONS

BUCHANAN, INGERSOLL & ROONEY PC
POST OFFICE BOX 1404
ALEXANDRIA VA 22313-1404

In re Application of	:	
Johan Elgebrant	:	
Application No. 29/258,971	:	DECISION ON PETITION
Filed: April 28, 2006	:	UNDER 37 C.F.R. §1.181
Attorney Docket No.: 1027651-000502	:	
Title: PACKAGING	:	

This is a decision on the petition filed April 23, 2007, pursuant to 37 C.F.R. §1.181, requesting that the holding of abandonment in the above-identified application be withdrawn.

The above-identified application became abandoned for failure to submit the issue fee in a timely manner in reply to the Notice of Allowance and Issue Fee Due, mailed October 17, 2006, which set a shortened statutory period for reply of three months. No extensions of time are permitted for transmitting issue fees[1]. Accordingly, the above-identified application became abandoned on January 18, 2007. A Notice of Abandonment was mailed on February 23, 2007.

With the present petition, Petitioner has asserted that the Notice of Allowance and Issue Fee Due was not received.

The showing required to establish nonreceipt of an Office communication must include a statement from the practitioner stating that the Office communication was not received by the practitioner and attesting to the fact that a search of the file jacket and docket records indicates that the Office communication was not received. In addition, a copy of the docket record where the non-received Office communication would

1 See MPEP §710.02(e).

have been entered had it been received and docketed must be attached to and referenced in practitioner's statement[2].

Petitioner has met the requirements of Delgar v. Schuyler, 172 USPQ 513 (D.D.C. 1971), in that he has asserted that the Office communication was not received, that he has searched both the file jacket and the docket record, and he has included a copy of the latter.

Considering the facts and circumstances of the delay at issue, as set forth on petition, it is concluded that Petitioner has met his burden of establishing that the mailing was not received.

Accordingly, the petition under 37 C.F.R. §1.181(a) is **GRANTED**. The holding of abandonment is **WITHDRAWN**.

The Office of Patent Publication will be notified of this decision so that the present application can be processed into a patent.

Petitioner has submitted a terminal disclaimer, which is not required, as Rule § 1.137(d) does not apply to the present situation. As such, the terminal disclaimer will not be entered, and the associated fee will be refunded via the mailing of a treasury check in due course.

Telephone inquiries regarding *this decision* should be directed to the undersigned at (571) 272-3225[3]. All other inquiries concerning the status of the application should be directed to the Office of Patent Publication at 571-272-4200.

Paul Shanoski
Senior Attorney
Office of Petitions
United States Patent and Trademark Office

---

2 See MPEP 711.03(c).
3 Petitioner will note that all practice before the Office should be in writing, and the action of the Office will be based exclusively on the written record in the Office. See 37 C.F.R. §1.2. As such, Petitioner is reminded that no telephone discussion may be controlling or considered authority for any further action(s) of Petitioner.

UNITED STATES PATENT AND TRADEMARK OFFICE

Commissioner for Patents
United States Patent and Trademark Office
P.O. Box 1450
Alexandria, VA 22313-1450
www.uspto.gov

INTELLECTUAL PROPERTY GROUP
FREDRIKSON & BYRON, P.A.
200 SOUTH SIXTH STREET
SUITE 4000
MINNEAPOLIS MN 55402

COPY MAILED
AUG 03 2007
OFFICE OF PETITIONS

ON PETITION

In re Application of
Lori Greiner
Application No. 29/258,994
Filed: May 1, 2006
Attorney Docket No. 47636.40.3

This is a decision on the petition under 37 CFR 1.137(b), filed January 23, 2007, to revive the above-identified design application.

The petition is **GRANTED**.

The petition satisfies the requirements of 37 CFR 1.137(b) in that petitioner has supplied (1) the reply in the form of a Continued Prosecution Application (CPA) under 37 CFR 1.53(d); (2) the petition fee of $750 a proper statement of unintentional delay; and (4) a terminal disclaimer and fee as required by 37 CFR 1.137(d).

The terminal disclaimer is accepted and has been made of record.

This application is being revived solely for purposes of continuity. As continuity has been established by this decision, the application is again abandoned in favor of the CPA.

Telephone inquiries concerning this decision should be directed to Terri Williams at (571) 272-2991.

This application is being referred to Technology Center AU 2911 for processing of the CPA.

Liana Walsh
Petitions Examiner
Office of Petitions

UNITED STATES PATENT AND TRADEMARK OFFICE

Commissioner for Patents
United States Patent and Trademark Office
P.O. Box 1450
Alexandria, VA 22313-1450
www.uspto.gov

INTELLECTUAL PROPERTY GROUP
FREDRIKSON & BYRON, P.A.
200 SOUTH SIXTH STREET
SUITE 4000
MINNEAPOLIS, MN 55402

COPY MAILED

JUN 27 2007

OFFICE OF PETITIONS

In re Application of	:	
Lori Greiner	:	
Application No. 29/258,999	:	ON PETITION
Filed: May 1, 2006	:	
Attorney Docket No. 47636.40.4	:	

This is a decision on the petition under 37 CFR 1.137(b), filed February 2, 2007, to revive the above-identified design application.

The petition is **GRANTED**.

The petition satisfies the requirements of 37 CFR 1.137(b) in that petitioner has supplied (1) the reply in the form of a Continued Prosecution Application (CPA) under 37 CFR 1.53(d); (2) the petition fee of $750; (3) a proper statement of unintentional delay; and (4) a terminal disclaimer and fee as required by 37 CFR 1.137(d).

The terminal disclaimer is accepted and has been made of record.

This application is being revived solely for purposes of continuity. As continuity has been established by this decision, the application is again abandoned in favor of the CPA.

Telephone inquiries concerning this decision should be directed to April Wise at (571) 272-1642.

This application is being referred to Technology Center AU 2911 for processing of the CPA.

Irvin Dingle
Petitions Examiner
Office of Petitions

IFW

Attorney Docket No. 4627D D 150

PATENT

OIPE JUL 06 2006 PATENT & TRADEMARK OFFICE

IN THE UNITED STATES PATENT AND TRADEMARK OFFICE

In re Application of: David E. Levy, et al.

Application No.: 29/259,012
Confirmation No.: 5197
Filed On: May 1, 2006

Examiner:

Art Unit: 2913

For: BAKING PAN

Mail Stop Expedited Design
Commissioner For Patents
P.O. Box 1450
Alexandria, VA 22313-1450

7-19-06
Approved Jacqueline M. Stone
Jacqueline M. Stone, Director
Technology Center 1700/2900

REQUEST FOR EXPEDITED EXAMINATION
OF A DESIGN APPLICATION (37 C.F.R. § 1.155)

Dear Sir:

This is a request for expedited examination of a design application under 37 C.F.R. § 1.155. A preexamination search was conducted. The field of search was cake pans and baking pans in class D7 subclass 354, class 99 subclass 442; and class 220 subclasses 573.1, 573.2, 573.3, 573.4 and 573.5 As required, an Information Disclosure Statement in compliance with 37 C.F.R. § 1.98 is filed herewith.

Applicant filed formal drawings at the time of filing of the application.

The fee required under 37 C.F.R. § 1.17(k) of $900.00 for this Request is enclosed. The Commissioner is hereby authorized to charge payment of any additional fees associated with this communication or credit any overpayment to Deposit Account No. 23-0280.

Respectfully submitted,

Date: June 30, 2006

Brent A. Hawkins, Reg. No. 44,146
Wallenstein & Wagner, Ltd.
311 South Wacker Drive, 53rd Floor
Chicago, Illinois 60606-6630
312.554.3300

07/07/2006 SSESHE1 00000028 29259012
1 FC:1802 900.00

UNITED STATES PATENT AND TRADEMARK OFFICE

Commissioner for Patents
United States Patent and Trademark Office
P.O. Box 1450
Alexandria, VA 22313-1450
www.uspto.gov

COPY MAILED

AUG 30 2006

OFFICE OF PETITIONS

DOUGLAS T. JOHNSON
MILLER & MARTIN
1000 VOLUNTEER BUILDING
832 GEORGIA AVENUE
CHATTANOOGA TN 37402-2289

COPY MAILED

AUG 29 2006

OFFICE OF PETITIONS

In re Application of	:	
Hutchison, Steve	:	
Application No. 29/259,034	:	ON PETITION
Filed: May 1, 2006	:	
Attorney Docket No. 17011-0001	:	

This is a decision on the petition filed May 25, 2006, requesting that the above-identified application be accorded a filing date of May 1, 2006, rather than the presently accorded date of May 2, 2006. The petition is properly treated as a petition under 37 CFR 1.10(c).

Applicant requests the earlier filing date on the basis that the application was purportedly deposited with the U. S. Postal Service (USPS) as Express Mail on May 1, 2006, pursuant to 37 CFR 1.10. In support, applicant has submitted a copy of the Track & Confirm record for Express Mail label No. EQ 230645040 US, showing that the package in question was enroute on May 1, 2006, at 6:15 p.m. at the Chattanooga, TN, USPS. The same Express Mail receipt number appears on the original "Design Patent Application Transmittal."

In view of the above evidence, it is concluded that the application was deposited as "Express Mail" with the USPS on May 1, 2006.

The petition is **GRANTED**.

This matter is being referred to the Office of Initial Patent Examination Division for further **processing with a filing date of May 1, 2006, along with a corrected filing receipt.** Thereafter, the matter will be referred to Technology Center 2900 for examination in due course.

Telephone inquiries concerning this matter may be directed Petitions Examiner Liana Chase at (571) 272-3206.

Frances Hicks

Frances Hicks
Petitions Examiner
Office of Petitions

UNITED STATES PATENT AND TRADEMARK OFFICE

Commissioner for Patents
United States Patent and Trademark Office
P.O. Box 1450
Alexandria, VA 22313-1450
www.uspto.gov

ECKERT, SEAMANS, CHERIN, & MELLOTT, L.L.C
DAVID C. JENKINS
600 GRANT STREET, 44TH FLOOR
PITTSBURGH, PA 15219

COPY MAILED

SEP 1 1 2008

In re Application of	:	
Hyp et al.	:	
Application No. 29/259,085	:	ON PETITION
Filed: May 2, 2006	:	
Attorney Docket No. 288903-00365	:	

This is a decision on the petition under the unintentional provisions of 37 CFR 1.137(b), filed March 10, 2008, to revive the above-identified application.

The petition is **DISMISSED**.

Any request for reconsideration of this decision must be submitted within TWO (2) MONTHS from the mail date of this decision. Extensions of time under 37 CFR 1.136(a) are permitted. The reconsideration request should include a cover letter entitled "Renewed Petition under 37 CFR 1.137(b)." This is **not** a final agency action within the meaning of 5 U.S.C. § 704.

A grantable petition under 37 CFR 1.137(b) must be accompanied by: (1) the required reply, unless previously filed; (2) the petition fee as set forth in 37 CFR 1.17(m); (3) a statement that the entire delay in filing the required reply from the due date for the reply until the filing of a grantable petition pursuant to 37 CFR 1.137(b) was unintentional; and (4) any terminal disclaimer (and fee as set forth in 37 CFR 1.20(d)) required by 37 CFR 1.137(d). Where there is a question as to whether either the abandonment or the delay in filing a petition under 37 CFR 1.137 was unintentional, the Director may require additional information. See MPEP 711.03(c)(II)(C) and (D). The instant petition lacks item(s) (4).

Petitioner has not included the required Terminal Disclaimer and fee for a design patent application.

Further correspondence with respect to this matter should be addressed as follows:

By Mail: Mail Stop PETITION
Commissioner for Patents
P. O. Box 1450
Alexandria, VA 22313-1450

By hand: U. S. Patent and Trademark Office
Customer Service Window, Mail Stop Petitions
Randolph Building
401 Dulany Street
Alexandria, VA 22314

The centralized facsimile number is **(571) 273-8300.**

Telephone inquiries concerning this decision should be directed to Joan Olszewski at (571) 272-7751.

Liana Walsh
Petitions Examiner
Office of Petitions

UNITED STATES PATENT AND TRADEMARK OFFICE

Commissioner for Patents
United States Patent and Trademark Office
P.O. Box 1450
Alexandria, VA 22313-1450
www.uspto.gov

ECKERT, SEAMANS, CHERIN, & MELLOTT, L.L.C
DAVID C. JENKINS
600 GRANT STREET, 44TH FLOOR
PITTSBURGH, PA 15219

COPY MAILED

SEP 22 2008

OFFICE OF PETITIONS

In re Application of	:	ON PETITION
Hyp et al.	:	
Application No. 29/259,085	:	
Filed: May 2, 2006	:	
Attorney Docket No. 288903-00365	:	

This is a decision on the renewed petition under the unintentional provisions of 37 CFR 1.137(b), filed September 17, 2008, to revive the above-identified application.

The petition is **GRANTED**.

This application became abandoned for failure to timely submit Corrected Drawings on or before November 23, 2007, as required by the Notice of Allowability mailed August 23, 2007. Accordingly, the date of abandonment of this application is November 24, 2007. A Notice of Abandonment was mailed December 20, 2007.

The petition satisfies the requirements of 37 CFR 1.137(b) in that petitioner has supplied (1) the reply in the form of Corrected Drawings; (2) the petition fee of $1,540.00 (previously paid); (3) a proper statement of unintentional delay; and (4) a Terminal Disclaimer with the accompanying $130.00 fee.

Telephone inquiries concerning this decision should be directed to Joan Olszewski at (571) 272-7751.

This application is being referred to the Office of Data Management for processing into a patent.

/Liana Walsh/
Liana Walsh
Petitions Examiner
Office of Petitions

UNITED STATES PATENT AND TRADEMARK OFFICE

Commissioner for Patents
United States Patent and Trademark Office
P.O. Box 1450
Alexandria, VA 22313-1450
www.uspto.gov

JANSSON SHUPE & MUNGER LTD.
245 MAIN STREET
RACINE, WI 53403

COPY MAILED

MAR 26 2008

OFFICE OF PETITIONS

In re Application of	:	
Karl Kammerer	:	
Application No. 29/259,087	:	ON PETITION
Filed: May 2, 2006	:	
Attorney Docket No. JFH-MI6545US	:	

This is a decision on the petition under 37 CFR 1.137(b), filed on November 5, 2007, to revive the above-identified application.

The petition is **DISMISSED**.

The above-identified application became abandoned for failure to timely respond to the Notice of Allowability mailed January 10, 2007. A Notice of Abandonment was mailed on October 2, 2007.

A grantable petition under 37 CFR 1.137(b) must be accompanied by: (1) the required reply, unless previously filed; (2) the petition fee as set forth in 37 CFR 1.17(m); (3) a statement that the entire delay in filing the required reply from the due date for the reply until the filing of a grantable petition pursuant to 37 CFR 1.137(b) was unintentional; and (4) any terminal disclaimer (and fee as set forth in 37 CFR 1.20(d)) required by 37 CFR 1.137(d). Where there is a question as to whether either the abandonment or the delay in filing a petition under 37 CFR 1.137 was unintentional, the Commissioner may require additional information. See MPEP 711.03(c)(III)(C) and (D). The instant petition lacks item(s) (4).

The Office acknowledges receipt of $770 for the petition to revive fee and one sheet of replacement drawings containing Figures 1-6 filed on November 5, 2007. However, a Terminal Disclaimer and $65 fee is required under 37 CFR 1.137(d) if the application is: (1) a design application, (2) a utility application filed before June 8, 1995, or (3) a plant application filed before June 8, 1995. The Terminal Disclaimer must dedicate to the public a terminal part of the term of any patent granted the application equivalent to the period of abandonment of the application, and must also apply to any patent granted on any application containing a specific reference under 35 U.S.C. 120, 121 or 365(c) to the application for which revival is sought.

Any request for reconsideration of this decision must be submitted within **TWO (2) MONTHS** from the mail date of this decision. Extensions of time under 37 CFR 1.136(a) are permitted. The reconsideration request should include a cover letter entitled "Renewed Petition under 37 CFR 1.137(b), and be accompanied by the required Terminal Disclaimer and $65 fee." This is **not** a final agency action within the meaning of 5 U.S.C. § 704.

Further correspondence with respect to this matter should be addressed as follows:

By mail: Mail Stop PETITION
Commissioner for Patents
P. O. Box 1450
Alexandria, VA 22313-1450

By hand: U. S. Patent and Trademark Office
Customer Service Window, Mail Stop Petitions
Randolph Building
401 Dulany Street
Alexandria, VA 22314

The centralized facsimile number is **(571) 273-8300.**

Telephone inquiries concerning this decision should be directed to the undersigned at (571) 272-3226.

Andrea Smith
Petitions Examiner
Office of Petitions

UNITED STATES PATENT AND TRADEMARK OFFICE

COMMISSIONER FOR PATENTS
UNITED STATES PATENT AND TRADEMARK OFFICE
P.O. BOX 1450
ALEXANDRIA, VA 22313-1450
www.uspto.gov

JANSSON SHUPE & MUNGER, LTD.
245 MAIN STREET
RACINE, WI 53403

COPY MAILED

JUN 03 2008

OFFICE OF PETITIONS

In re Application of
Karl Kammerer
Application No. 29/259,087
Filed: May 2, 2006
Attorney Docket No. JFH-M16545US

ON PETITION

This is a decision on the renewed petition under 37 CFR 1.137(b), filed on April 2, 2008, which is being treated as a renewed petition to revive the above-identified application.

The petition satisfies the requirements of 37 CFR 1.137(b) in that petitioner has supplied (1) the reply in the form of one sheet of corrected drawings containing Figures 1-6, and $65 for the filing of a terminal disclaimer; (2) the petition fee of $770; and (3) a proper statement of unintentional delay. Therefore, the petition is **GRANTED**.

The terminal disclaimer under 37 CFR 1.137(d), filed October 5, 2007, has been accepted and made of record. Any continuing application filed from this application must contain a copy of the terminal disclaimer. The copy of the terminal disclaimer must be filed with a cover letter requesting the terminal disclaimer be recorded on the continuing application. A copy of this decision should be attached to the cover letter.

This application file is being referred to the Office of Data Management for further processing into a patent.

Telephone inquiries concerning this decision should be directed to the undersigned at (571) 272-3226.

Andrea Smith
Petitions Examiner
Office of Petitions

UNITED STATES PATENT AND TRADEMARK OFFICE

Commissioner for Patents
United States Patent and Trademark Office
P.O. Box 1450
Alexandria, VA 22313-1450
www.uspto.gov

THE GOODYEAR TIRE & RUBBER COMPANY
INTELLECTUAL PROPERTY DEPARTMENT 823
1144 EAST MARKET STREET
AKRON, OH 44316-0001

COPY MAILED

JAN 1 4 2008

OFFICE OF PETITIONS

In re Application of Maziarka et al. :
Application No. 29/259,107 : Decision on Petition
Filing Date: May 2, 2006 :
Attorney Docket No. DN2006051 :

This is a decision on the petition under 37 CFR 1.181, filed September 10, 2007, to withdraw the holding of abandonment.

The petition is **granted.**

A Notice of Allowance was mailed April 2, 2007. The Notice set a statutory period for reply of three (3) months. The Office did not receive a reply to the Notice of Allowance. As a result, a Notice of Abandonment was mailed August 6, 2007.

Petitioner requests the Office withdraw the holding of abandonment based on non-receipt of the Notice of Allowance.

The Office has considered the entire record and determined the showing is sufficient to establish non-receipt of the Notice of Allowance. Therefore, the Notice of Abandonment is hereby vacated and the holding of abandonment withdrawn.

A Notice of Allowability with attachments was mailed with the Notice of Allowance on April 2, 2007. Since petitioner did not receive the Notice of Allowance, it is presumed petitioner did not receive the Notice of Allowability. Therefore, both the Notice of Allowance and Notice of Allowability mailed on April 2, 2007, are vacated.

A new Notice of Allowance and Notice of Allowability will be mailed and the period for reply will be reset.

Petitioner instructed the Office to charge $130 to petitioner's deposit account for the petition fee. The Office charged the fee on September 11, 2007. A fee is not required for a petition to withdraw the holding of abandonment. Therefore, the Office has credited the $130 back to petitioner's deposit account.

Technology Center Art Unit 2913 will be informed of the instant decision. Thereafter, the Technology Center's technical support staff will mail a new Notice of Allowance and Notice of Allowability. The time period for responding to the new Notices will be set to run from the mailing date of the new Notices.

Telephone inquiries regarding this communication should be directed to Petitions Attorney Steven Brantley at (571) 272-3203.

Charles Steven Brantley
Senior Petitions Attorney
Office of Petitions

UNITED STATES PATENT AND TRADEMARK OFFICE

Commissioner for Patents
United States Patent and Trademark Office
P.O. Box 1450
Alexandria, VA 22313-1450
www.uspto.gov

EDWARDS ANGELL PALMER & DODGE
P.O. BOX 55874
BOSTON, MASSACHUSETTS 02205

MAILED

MAR 16 2009

OFFICE OF PETITIONS

In re Patent No. D544543 Issue Date: June 12, 2007 Application No. 29/259,140 Filed: May 3, 2006 Attorney Docket No. 060069	:	DECISION ON PETITION

This is a decision on the petition under 37 CFR 1.182, filed February 20, 2009, requesting issuance of a duplicate Letters Patent for the above-identified patent.

The petition is **GRANTED**.

The Office of Data Management is directed to issue a duplicate Letters Patent.

As authorized, the $400 fee for the petition under 37 CFR 1.182 has been assessed to petitioner's deposit account.

Telephone inquiries concerning this decision may be directed to the undersigned at (571) 272-3208. Inquiries regarding the issuance of a duplicate Letters Patent may be directed to Niomi Farmer in the Office of Data Management at (703) 308-9250, Ext. 139.

A copy of this decision is being faxed to the Office of Data Management for issuance of a duplicate Letters Patent.

Karen Creasy

Karen Creasy
Petitions Examiner
Office of Petitions

cc: Niomi Farmer, South Tower, 8th Floor, Room C23 (Fax No. (571) 270-9753)

UNITED STATES PATENT AND TRADEMARK OFFICE

Commissioner for Patents
United States Patent and Trademark Office
P.O. Box 1450
Alexandria, VA 22313-1450
www.uspto.gov

COPY MAILED

FEB 01 2008

OFFICE OF PETITIONS

THE COCA-COLA COMPANY
PATENT & TECHNOLOGY DEPT--NAT 19
P.O. BOX 1734
ATLANTA, GA 30301

In re Application of Fant :
Application No. 29/259,208 : Decision on Petition
Filing Date: May 4, 2006 :
Attorney Docket No. RC 278292 :

This is a decision on the petition under 37 CFR 1.181, filed September 28, 2007, to withdraw the holding of abandonment.

The petition is **granted.**

A Notice of Allowance and Notice of Allowability were mailed May 10, 2007. The Notice of Allowance required payment of the $800 issue fee and set a statutory period for reply of three (3) months. The Office did not receive a reply to the Notice of Allowance. As a result, a Notice of Abandonment was mailed September 5, 2007.

Petitioner requests withdrawal of the holding of abandonment based on non-receipt of the Notice of Allowance and Notice of Allowability.

The evidence supplied by petitioner has been reviewed and is sufficient to demonstrate non-receipt of the Notice of Allowance and Notice of Allowability.

The Notice of Abandonment is hereby vacated and the holding of abandonment withdrawn.

Technology Center Art Unit 2914 will be informed of the instant decision. Thereafter, the Technology Center's technical support staff will mail a new Notice of Allowance and Notice of Allowability. The time period for responding to the new Notices will be set to run from the mailing date of the new Notices.

Telephone inquiries regarding this communication should be directed to Petitions Attorney Steven Brantley at (571) 272-3203.

Charles Steven Brantley
Senior Petitions Attorney
Office of Petitions

UNITED STATES PATENT AND TRADEMARK OFFICE

Commissioner for Patents
United States Patent and Trademark Office
P.O. Box 1450
Alexandria, VA 22313-1450
www.uspto.gov

Charles N.J. Ruggiero, Esq.
Ohlandt, Greeley, Ruggiero & Perle, L.L.P.
10th Floor
One Landmark Square
Stamford CT 06901-2682

COPY MAILED

OCT 15 2007

OFFICE OF PETITIONS

In re Application of	:	
Kliegman et al.	:	
Application No.: 29/259285	:	DECISION ON
Filing or 371(c) Date: 05/05/2006	:	PETITION
Attorney Docket Number: 460.2469USD	:	

This is a decision in response to the Petition to Withdraw Holding of Abandonment Under 37 C.F.R. 1.181(a) Transmittal, filed August 27, 2007.

This Petition is hereby **dismissed**.

Any further petition must be submitted within TWO (2) MONTHS from the mail date of this decision. Extensions of time under 37 CFR 1.136(a) are permitted. The reconsideration request should include a cover letter entitled "Renewed Petition under [insert the applicable code section]." This is **not** final agency action within the meaning of 5 U.S.C. § 704.

The above-identified application became abandoned for failure to timely and properly reply to the Office communication, mailed January 9, 2007. The Office communication set a one (1) month period for reply. No reply having been received, the application became abandoned on February 10, 2007. A Notice of Abandonment was mailed August 6, 2007.

Petition under 37 CFR 1.181

Applicant files the instant petition and asserts that a timely reply to the Office action was filed on February 9, 2007, and included a Certificate of Mailing under 37 CFR 1.8. In support of this assertion, Applicant provides a copy of an Amendment Transmittal which includes a Certificate of Transmission dated February 9, 2007, and executed by Suzanne Lombardo. No statement from Ms. Lombardo attesting to the transmission has been filed. Applicant also includes with the petition a copy of Applicant's return-receipt postcard acknowledging receipt by this Office of, *inter alia*, an Election, on February 12, 2007.

Applicable Law, Rules and MPEP

37 CFR 1.8(b), Certificate of mailing or transmission, .The MPEP 711.03(c)A, Petition To Withdraw Holding of Abandonment Based on Failure To Receive Office Action, explains that

> (b) In the event that correspondence is considered timely filed by being mailed or transmitted in accordance with paragraph (a) of this section, but not received in the U.S. Patent and Trademark Office after a reasonable amount of time has elapsed from the time of mailing or transmitting of the correspondence, or after the application is held to be abandoned, or after the proceeding is dismissed, terminated, or decided with prejudice, the correspondence will be considered timely if the party who forwarded such correspondence:
> (1) Informs the Office of the previous mailing or transmission of the correspondence promptly after becoming aware that the Office has no evidence of receipt of the correspondence;
> (2) Supplies an additional copy of the previously mailed or transmitted correspondence and certificate; and
> (3) Includes a statement which attests on a personal knowledge basis or to the satisfaction of the Director to the previous timely mailing or transmission. If the correspondence was sent by facsimile transmission, a copy of the sending unit's report confirming transmission may be used to support this statement.
> (c) The Office may require additional evidence to determine if the correspondence was timely filed. (Emphasis supplied).

37 CFR 1.8(b)

Analysis and conclusion

Applicant has failed to comply with 37 CFR 1.8(b)(3). In this regard, a statement from Ms. Lombardo, which attests on a personal knowledge basis, to the previous timely mailing or transmission, is required. While Applicant has submitted a copy of his return-receipt postcard, the postcard stamp is dated February 12, 2007. Evidence of timely filing, to wit - a statement from Ms. Lombardo, is required. The petition is dismissed without prejudice. Applicant should file a request for reconsideration of petition which includes the necessary statement.

Further correspondence with respect to this matter should be addressed as follows:

By mail: Director for Patents
PO Box 1450
Alexandria, VA 22313-1450

By FAX: (571) 273-8300
Attn: Office of Petitions

By hand: Customer Service Window
Randolph Building
401 Dulany Street
Alexandria, VA 22314

Telephone inquiries concerning this matter should be directed to the undersigned at (571) 272-3232.

Derek L. Woods
Attorney
Office of Petitions

UNITED STATES PATENT AND TRADEMARK OFFICE

Commissioner for Patents
United States Patent and Trademark Office
P.O. Box 1450
Alexandria, VA 22313-1450
www.uspto.gov

Charles N.J. Ruggiero, Esq.
Ohlandt, Greeley, Ruggiero & Perle, L.L.P.
10th Floor
One Landmark Square
Stamford CT 06901-2682

COPY MAILED

FEB 1 3 2008

OFFICE OF PETITIONS

In re Application of	:	
Kliegman et al.	:	
Application No.: 29/259285	:	DECISION ON
Filing or 371(c) Date: 05/05/2006	:	PETITION
Attorney Docket Number: 460.2469USD	:	

This is a decision in response to the Renewed Petition Under 37 C.F.R. §1.181(a), filed December 17, 2007.

This Petition is hereby **granted**.

The above-identified application became abandoned for failure to timely and properly reply to the Office communication, mailed January 9, 2007. The Office communication set a one (1) month period for reply. No reply having been received, the application became abandoned on February 10, 2007. A Notice of Abandonment was mailed August 6, 2007.

The August 27, 2007 Petition under 37 CFR 1.181

Applicant filed a petition to withdraw the holding of abandonment on August 27, 2007, and asserted that a timely reply to the Office action was filed on February 9, 2007, and included a Certificate of Mailing under 37 CFR 1.8. In support of this assertion, Applicant provided a copy of an Amendment Transmittal which included a Certificate of Transmission dated February 9, 2007, and executed by Suzanne Lombardo. No statement from Ms. Lombardo attesting to the transmission was filed. Applicant also included with the petition a copy of Applicant's return-receipt postcard acknowledging receipt by this Office of, *inter alia*, an Election, on February 12, 2007.

The petition was dismissed in a Decision mailed October 15, 2007. The Decision dismissing the petition noted that, while Applicant had submitted a copy of his return-receipt postcard, the postcard stamp was dated February 12, 2007. Evidence of timely filing, to wit - a statement from Ms. Lombardo, attesting to the timely filing of the reply under 37 CFR 1.8(b)(3), was required.

The present renewed petition

Petitioner files the present renewed petition and includes the appropriate statement from Ms. Lombardo attesting to the timely filing of the reply under 37 CFR 1.8(b)(3).

In view of the foregoing, the petition is granted. The holding of abandonment is hereby withdrawn.

The application will be referred to Technology Center Art Unit 2914 for processing of the reply, and for continued examination in due course.

Telephone inquiries concerning this matter should be directed to the undersigned at (571) 272-3232.

Derek L. Woods
Attorney
Office of Petitions

UNITED STATES PATENT AND TRADEMARK OFFICE

Commissioner for Patents
United States Patent and Trademark Office
P.O. Box 1450
Alexandria, VA 22313-1450
www.uspto.gov

DORR, CARSON & BIRNEY, P.C.
ONE CHERRY CENTER
501 SOUTH CHERRY STREET
SUITE 800
DENVER CO 80246

COPY MAILED

MAY 0 2 2007

OFFICE OF PETITIONS

In re Application of	:	
Brandon L. Brouillette et al.	:	
Application No. 29/259,294	:	DECISION ON PETITION
Filed: May 5, 2006	:	
Attorney Docket No. 8679/10	:	

This is a decision on the petition under the unintentional provisions of 37 CFR 1.137(b), filed November 6, 2006, to revive the above-identified application.

The petition is **GRANTED**.

This application became abandoned for failure to timely submit corrected formal drawings on or before September 14, 2006, as required by the Notice of Allowability, mailed June 14, 2006. Accordingly, the date of abandonment of this application is September 15, 2006. A Notice of Abandonment was mailed October 26, 2006.

The petition satisfies the requirements of 37 CFR 1.137(b) in that petitioner has supplied (1) the reply in the form of corrected formal drawings , (2) the petition fee of $750; (3) a proper statement of unintentional delay and (4) a terminal disclaimer.

The drawings have been approved by the USPTO draftsperson.

Telephone inquiries concerning this decision should be directed to Terri Williams at (571) 272-2991.

This application is being referred to Publishing Division for processing into a patent.

Liana Walsh
Petitions Examiner
Office of Petitions

UNITED STATES PATENT AND TRADEMARK OFFICE

COMMISSIONER FOR PATENTS
UNITED STATES PATENT AND TRADEMARK OFFICE
P.O. BOX 1450
ALEXANDRIA, VA 22313-1450
www.uspto.gov

VENABLE LLP
P.O. BOX 34385
WASHINGTON, DC 20043-9998

COPY MAILED

JAN 16 2008

OFFICE OF PETITIONS

In re Application of :
Sheldon Eric Yourist :
Application No. 29/259,331 : ON PETITION
Filed: May 8, 2006 :
Attorney Docket No. 29953-229458 :

This is a decision on the petition, filed September 10, 2007, to revive the above-identified application under 37 CFR 1.137(b).

The petition is **DISMISSED**.

Any request for reconsideration of this decision must be submitted within TWO (2) MONTHS from the mail date of this decision. Extensions of time under 37 CFR 1.136(a) are permitted. The reconsideration request should include a cover letter entitled "Renewed Petition under 37 CFR 1.137(b)." This is **not** a final agency action within the meaning of 5 U.S.C. § 704.

The application became abandoned for failure to pay the issue fee on or before August 8, 2007. A Notice of Abandonment was mailed on August 31, 2007. In response, on September 10, 2007, the present petition was filed.

A grantable petition under 37 CFR 1.137(b)[1] must be accompanied by: (1) the required reply,[2] unless previously filed; (2) the petition fee as set forth in 37 CFR 1.17(m); (3) a statement that the entire delay in filing the required reply from the due date for the reply until the filing of a grantable petition pursuant to 37 CFR 1.137(b) was unintentional; and (4) any terminal disclaimer (and fee as set forth in 37 CFR 1.20(d)) required by 37 CFR 1.137(c). Where there is a question as to whether either the abandonment or the delay in filing a petition under 37 CFR 1.137 was unintentional, the Commissioner may require additional information. See MPEP 711.03(c)(II)(C) and (D).

---

[1] As amended effective December 1, 1997. See Changes to Patent Practice and Procedure; Final Rule Notice, 62 Fed. Reg. 53131, 53194-95 (October 10, 1997), 1203 Off. Gaz. Pat. Office 63, 119-20 (October 21, 1997).

[2] In a nonprovisional application abandoned for failure to prosecute, the required reply may be met by the filing of a continuing application. In an application or patent, abandoned or lapsed for failure to pay the issue fee or any portion thereof, the required reply must be the payment of the issue fee or any outstanding balance thereof.

The petition lacks item (4) above. In this regard, the Revocation and Power Attorney filed September 10, 2007 is **not** acceptable, since the Power of Attorney is from an assignee but the Certificate required by 37 CFR 3.73(b) has not been provided. Consequently, petitioner has no authority to sign a terminal disclaimer on behalf of the assignee. See 37 CFR 1.321(b)(1)(iv). Since the above-identified application is a design application, 37 CFR 1.137(d) requires a proper terminal disclaimer dedicating to the public a terminal part of the term of any patent granted thereon equivalent to the period of abandonment of the application. If the terminal disclaimer is signed by an assignee, the assignee must comply with the requirements of 37 CFR 3.73(b).

While the power of attorney has not been accepted, a courtesy copy of this decision is being mailed to petitioner. However, if Mr. Garrett desires to receive future correspondence regarding this application, the appropriate power of attorney or authorization of agent must be submitted. All future correspondence regarding this application file will be directed solely to the address of record.

Further correspondence with respect to this matter should be addressed as follows:

By mail: Mail Stop PETITION
Commissioner for Patents
Post Office Box 1450
Alexandria, VA 22313-1450

By hand: U.S. Patent and Trademark Office
Customer Service Window, Mail Stop PETITION
Randolph Building
401 Dulany Street
Alexandria, VA 22314

The centralized facsimile number is **(571) 273-8300**.

Any questions concerning this matter may be directed to the undersigned at (571) 272-3204.

Sherry D. Brinkley
Petitions Examiner
Office of Petitions

cc: TIMOTHY J. HADLOCK
CHEVRON CORPORATION, LAW DEPARTMENT
6001 BOLLINGER CANYON ROAD
SAN RAMON, CA 94583-2324

UNITED STATES PATENT AND TRADEMARK OFFICE

Commissioner for Patents
United States Patent and Trademark Office
P.O. Box 1450
Alexandria, VA 22313-1450
www.uspto.gov

CHEVRON CORPORATION
P.O. BOX 6006
SAN RAMON, CA 94583-0806

COPY MAILED

FEB 2 7 2008

OFFICE OF PETITIONS

In re Application of :
Sheldon E. Yourist :
Application No. 29/259,331 : ON PETITION
Filed: May 8, 2006 :
Attorney Docket No. 29953-229458 :

This is a decision in response to the renewed petition, filed February 11, 2008, to revive the above-identified application under 37 CFR 1.137(b).

The petition is **DISMISSED**.

Any request for reconsideration of this decision must be submitted within TWO (2) MONTHS from the mail date of this decision. Extensions of time under 37 CFR 1.136(a) are permitted. The reconsideration request should include a cover letter entitled "Renewed Petition under 37 CFR 1.137(b)." This is **not** a final agency action within the meaning of 5 U.S.C. § 704.

A review of the record discloses that the application became abandoned for failure to pay the issue fee on or before August 8, 2007. A Notice of Abandonment was mailed on August 31, 2007. On September 10, 2007, a petition under 37 CFR 1.137(b) was filed. The petition was dismissed in a decision mailed January 16, 2008, since the Terminal Disclaimer was not acceptable. Upon further review it is noted that the requisite petition fee was also not paid. On February 11, 2008 the present petition was filed, along with a power of attorney and a Terminal Disclaimer.

While the Power of Attorney is now acceptable, the Terminal Disclaimer cannot be accepted, as it was not accompanied by the requisite fee. Unfortunately, a general authorization from current counsel to charge any fee deficiencies to a deposit account is not present in the application file. Accordingly, a decision on the petition cannot be made until the required $1,540 fee for the petition and the $130 fee for the terminal disclaimer are received.

Further correspondence with respect to this matter should be addressed as follows:

By mail: Mail Stop PETITION
Commissioner for Patents

Post Office Box 1450
Alexandria, VA 22313-1450

By hand: U.S. Patent and Trademark Office
Customer Service Window, Mail Stop PETITION
Randolph Building
401 Dulany Street
Alexandria, VA 22314

The centralized facsimile number is **(571) 273-8300**.

Correspondence regarding this decision may also be filed through the electronic filing system of the USPTO.

To expedite consideration, petitioner may wish to contact the undersigned regarding the filing of the renewed petition under 37 CFR 1.137(b).

Any questions concerning this matter may be directed to the undersigned at (571) 272-3204.

Sherry D. Brinkley
Petitions Examiner
Office of Petitions

UNITED STATES PATENT AND TRADEMARK OFFICE

Commissioner for Patents
United States Patent and Trademark Office
P.O. Box 1450
Alexandria, VA 22313-1450
www.uspto.gov

CHEVRON CORPORATION
P.O. BOX 6006
SAN RAMON, CA 94583-0806

COPY MAILED

JUL 29 2008

In re Application of
Sheldon E. Yourist
Application No. 29/259,331
Filed: May 8, 2006
Attorney Docket No. 29953-229458

ON PETITION

This is a decision on the renewed petition under 37 CFR 1.137(b), filed April 21, 2008, to revive the above-identified design application.

The petition is **GRANTED**.

The application became abandoned for failure to timely pay the issue fee on or before August 8 2007, as required by the Notice of Allowance and Fee(s) Due mailed May 8, 2007. The issue fee was paid on September 4, 2007. On August 31, 2007, a Notice of Abandonment was mailed. The present petition was filed in response to a decision dismissing petition mailed February 37, 2008.

A grantable petition under 37 CFR 1.137(b)[1] must be accompanied by: (1) the required reply,[2] unless previously filed; (2) the petition fee as set forth in 37 CFR 1.17(m); (3) a statement that the entire delay in filing the required reply from the due date for the reply until the filing of a grantable petition pursuant to 37 CFR 1.137(b) was unintentional; and (4) any terminal disclaimer (and fee as set forth in 37 CFR 1.20(d)) required by 37 CFR 1.137(c).

The petition now satisfies the requirements of 37 CFR 1.137(b) in that petitioner has supplied (1) the reply in the form of the $800 issue fee, (2) the petition fee of $1,540, (3) an adequate statement of unintentional delay, and (4) a terminal disclaimer and fee as required by 37 CFR 1.137(d).

---

[1] As amended effective December 1, 1997. See Changes to Patent Practice and Procedure; Final Rule Notice, 62 Fed. Reg. 53131, 53194-95 (October 10, 1997), 1203 Off. Gaz. Pat. Office 63, 119-20 (October 21, 1997).

[2] In a nonprovisional application abandoned for failure to prosecute, the required reply may be met by the filing of a continuing application. In an application or patent, abandoned or lapsed for failure to pay the issue fee or any portion thereof, the required reply must be the payment of the issue fee or any outstanding balance thereof.

The terminal disclaimer filed February 11, 2008 is accepted and has been made of record. Any continuing application filed from this application must contain a copy of the terminal disclaimer. The copy of the terminal disclaimer must be filed with a cover letter requesting the terminal disclaimer be recorded on the continuing application. A copy of this decision should be attached to the cover letter.

The application is being referred to the Office of Data Management to be processed into a patent.

Telephone inquires related to this decision should be directed to the undersigned at (571) 272-3204. Telephone inquiries related to processing as a patent should be directed to (571) 272-4200.

Sherry D. Brinkley
Petitions Examiner
Office of Petitions

UNITED STATES PATENT AND TRADEMARK OFFICE

Commissioner for Patents
United States Patent and Trademark Office
P.O. Box 1450
Alexandria, VA 22313-1450
www.uspto.gov

DYKEMA GOSSETT PLLC
10 S. WACKER DR., STE. 2300
CHICAGO IL 60606

COPY MAILED

SEP 1 0 2008

OFFICE OF PETITIONS

In re Application of	:	
William R. McCormick	:	
Application No. 29/259,393	:	DECISION ON PETITION
Filed: May 8, 2006	:	
Patent No. D558,847	:	
Issued: January 1, 2008	:	
Attorney Docket No. 065300.1654	:	

This is a decision on the Request for Certificate of Correction under 37 CFR 1.323 filed March 6, 2008, which is being treated as a request under 37 CFR 3.81(b)[1] to correct the name of the assignee on the front page of the above-identified patent by way of a Certificate of Correction.

The request is **GRANTED**.

Petitioner requests that a certificate of correction be issued to reflect the correct assignee on the front page of the Letters Patent in the patent to be issued from the application.

37 CFR 3.81(b), effective June 25, 2004, reads:

> *After payment of the issue fee:* Any request for issuance of an application in the name of the assignee submitted after the date of payment of the issue fee, and any request for a patent to be corrected to state the name of the assignee, must state that the assignment was submitted for recordation as set forth in § 3.11 before issuance of the patent, and must include a request for a certificate of correction under § 1.323 of this chapter (accompanied by the fee set forth in § 1.20(a) and the processing fee set forth in § 1.17(i) of this chapter.

The request was accompanied by a certificate of correction (and fee) as required by 3.81(b). Further, Office assignment records reflect that Brunswick Bowling and Billiards Corporation is the assignee of record, which assignment was submitted for recordation as set forth in § 3.11 before issuance of the patent. Also, the request authorizes the charging of additional fees to deposit account number 04-2223, and the fee set forth in § 1.17(i) ($130.00) has been charged to

[1] *See* MPEP 1309, subsection II; and Official Gazette of June 22, 2004.

said account. Accordingly, as the request complies with the provisions of 37 CFR 3.81(b), it would be appropriate for a certificate of correction to be processed after issuance of this application into a patent.

Telephone inquiries concerning this decision should be directed to Christopher Bottorff at (571) 272-6692. Inquiries regarding the issuance of a certificate of correction should be directed to the Certificate of Correction Branch at (571) 272-4200.

The Certificates of Correction Branch will be notified of this decision granting the petition under 37 CFR 3.81(b) and directing issuance of the requested Certificate of Correction.

Christopher Bottorff

Christopher Bottorff
Petitions Examiner
Office of Petitions

UNITED STATES PATENT AND TRADEMARK OFFICE

Commissioner for Patents
United States Patent and Trademark Office
P.O. Box 1450
Alexandria, VA 22313-1450
www.uspto.gov

FISH & RICHARDSON PC
P.O. BOX 1022
MINNEAPOLIS MN 55440-1022

COPY MAILED

MAR 06 2009

OFFICE OF PETITIONS

In re Patent No. D562,638 :
Issue Date: February 26, 2008 :
Application No. 29/259,401 :
Filed: May 8, 2006 :
Attorney Docket Number: 20850-006001 :

ON PETITION

This is a decision on the petition, filed July 10, 2008, requesting the issuance of a duplicate Letters Patent for the above-identified application.

The petition is **GRANTED**.

Since it is U.S. Patent and Trademark Office practice to assure mailing of all papers on the date indicated, there is a strong presumption that papers duly addressed and indicated as mailed, such as the Letters Patent in this application, are timely delivered to the addressee. To overcome this presumption, a verified statement with supporting evidence, such as any records which would disclose the receipt of other correspondence mailed from the U.S. Patent and Trademark Office on or about February 26, 2008, but fail to disclose receipt of the Letters Patent mailed on that date, should be promptly submitted. Further, copies of records on which receipt of the Letters Patent would have been entered had it been received are required.

However, if the loss of the Letters Patent was not the fault of the U.S. Patent and Trademark Office or if petitioner simply wishes to avoid overcoming the above-noted presumption, a petition may be filed under 37 CFR 1.182 accompanied by a petition fee of $400.00 requesting a duplicate Letters Patent. Upon receipt of the petition and petition fee, the request for a duplicate Letters Patent will be granted.

Petitioners state that the Letters Patent was received from the USPTO and was subsequently lost. The petition fee in the amount of $400.00 has been charged to deposit account no. 06-1050 per the authorization but not in the amount of $130.00 as was indicated.

A copy of this decision is being forwarded to Office of Data Management for issuance of a duplicate Letters Patent.

The Office of Data Management is directed to issue a duplicate Letters Patent.

Telephone inquiries concerning this decision may be directed to the undersigned Senior Petitions Attorney at (571) 272-3212. Inquiries regarding the issuance of a duplicate Letters Patent may be directed to the Office of Data Management at (703) 308-9250.

Patricia Faison-Ball

Patricia Faison-Ball
Senior Petitions Attorney
Office of Petitions

cc: Niomi Farmer (Fax – (571) 270-9753)

OCT 23 2006

Doc Code:

PTO/SB/27 (09-04)

Approved for use through 07/31/2006. OMB 0651-0031

U.S. Patent and Trademark Office; U.S. DEPARTMENT OF COMMERCE

Under the Paperwork Reduction Act of 1995, no persons are required to respond to a collection of information unless it displays a valid OMB control number.

REQUEST FOR EXPEDITED EXAMINATION OF A DESIGN APPLICATION (37 CFR 1.155)		
	Application Number	29/259,404
	Filing Date	5/8/2006
	First Named Inventor	Peter Barhelmess
	Title	An Ornamental Design for a Tropical Tree Assembly for a Patio Table
	Atty Docket Number	122RK305

ADDRESS TO:

MAIL STOP EXPEDITED DESIGN
COMMISSIONER FOR PATENTS
P.O. Box 1450
Alexandria, VA 22313-1450

Approved 10/25/06
Jacqueline M. Stone
Jacqueline M. Stone, Director
Technology Center 1700/2900

This is a request for expedited examination of a design application under 37 CFR 1.155.

NOTE: If the Request made by this form accompanies original application papers, include form PTO/SB/18 "Design Patent Application Transmittal" or its equivalent.

A preexamination search was conducted. The field of search was:

211/196,205,119.005,26,85.23,13.1;D11/118;D6/513;D26/58;108/50.11,23;362/122,123,253,127,806;135/99

Related applications: ~~29/259,405,29/265,515,29/265513 and 29/265514~~

If not previously filed for the above-identified application, the following items required by 37 CFR 1.155 are enclosed:

Formal drawings (see 37 CFR 1.84).
The fee set forth in 37 CFR 1.17(k).
An information disclosure statement in compliance with 37 CFR 1.98.

Signature	October 20, 2006 Date
Richard B. Klar Typed or printed name	31,385 Registration Number, if applicable
(516) 827-0100 Telephone Number	

WARNING: Information on this form may become public. Credit card information should not be included on this form. Provide credit card information and authorization on PTO-2038.

This collection of information is required by 37 CFR 1.155. The information is required to obtain or retain a benefit by the public which is to file (and by the USPTO to process) an application. Confidentiality is governed by 35 U.S.C. 122 and 37 CFR 1.11 and 1.14. This collection is estimated to take 6 minutes to complete, including gathering, preparing, and submitting the completed application form to the USPTO. Time will vary depending upon the individual case. Any comments on the amount of time you require to complete this form and/or suggestions for reducing this burden, should be sent to the Chief Information Officer, U.S. Patent and Trademark Office, U.S. Department of Commerce, P.O. Box 1450, Alexandria, VA 22313-1450. DO NOT SEND FEES OR COMPLETED FORMS TO THIS ADDRESS. SEND TO: Commissioner for Patents, P.O. Box 1450, Alexandria, VA 22313-1450.

If you need assistance in completing the form, call 1-800-PTO-9199 and select option 2.

10/24/2006 HLE333 00000014 29259404
01 FC:1802 900.00 OP

Doc Code: OCT 23 2006

PTO/SB/27 (09-04)
Approved for use through 07/31/2006. OMB 0651-0031
U.S. Patent and Trademark Office; U.S. DEPARTMENT OF COMMERCE
Under the Paperwork Reduction Act of 1995, no persons are required to respond to a collection of information unless it displays a valid OMB control number.

REQUEST FOR EXPEDITED EXAMINATION OF A DESIGN APPLICATION (37 CFR 1.155)		
	Application Number	29/259,405
	Filing Date	5/8/2006
	First Named Inventor	Peter Barthelmess
	Title	An Ornamental Design for a Tropical Tree Assembly with Table
	Atty Docket Number	122RK304

ADDRESS TO:

MAIL STOP EXPEDITED DESIGN
COMMISSIONER FOR PATENTS
P.O. Box 1450
Alexandria, VA 22313-1450

Approved 10/25/06
Jacqueline M. Stone
Jacqueline M. Stone, Director
Technology Center 1700/2900

This is a request for expedited examination of a design application under 37 CFR 1.155.

NOTE: If the Request made by this form accompanies original application papers, include form PTO/SB/18 "Design Patent Application Transmittal" or its equivalent.

A preexamination search was conducted. The field of search was:

211/196,205,119.005,26,85.23,13.1;D11/118;D6/513;D26/58;108/50.11,23;362/122,123,253,127,806;135/99

Related applications: ~~29/259,404, 29/265,515, 29/265513 and 29/265514~~

If not previously filed for the above-identified application, the following items required by 37 CFR 1.155 are enclosed:

Formal drawings (see 37 CFR 1.84).
The fee set forth in 37 CFR 1.17(k).
An information disclosure statement in compliance with 37 CFR 1.98.

Signature	October 20 2006 Date
Richard B. Klar Typed or printed name	31,385 Registration Number, if applicable
(516) 827-0100 Telephone Number	

WARNING: Information on this form may become public. Credit card information should not be included on this form. Provide credit card information and authorization on PTO-2038.

This collection of information is required by 37 CFR 1.155. The information is required to obtain or retain a benefit by the public which is to file (and by the USPTO to process) an application. Confidentiality is governed by 35 U.S.C. 122 and 37 CFR 1.11 and 1.14. This collection is estimated to take 6 minutes to complete, including gathering, preparing, and submitting the completed application form to the USPTO. Time will vary depending upon the individual case. Any comments on the amount of time you require to complete this form and/or suggestions for reducing this burden, should be sent to the Chief Information Officer, U.S. Patent and Trademark Office, U.S. Department of Commerce, P.O. Box 1450, Alexandria, VA 22313-1450. DO NOT SEND FEES OR COMPLETED FORMS TO THIS ADDRESS. **SEND TO: Commissioner for Patents, P.O. Box 1450, Alexandria, VA 22313-1450.**

If you need assistance in completing the form, call 1-800-PTO-9199 and select option 2.

01 FC:1802 900.00 OP

SPE RESPONSE FOR CERTIFICATE OF CORRECTION

Paper No.: _____

DATE : 10-7-08

TO SPE OF : ART UNIT 2911

SUBJECT : Request for Certificate of Correction for Appl. No.: 29/259410 Patent No.: D564498

Please respond to this request for a certificate of correction within 7 days.

FOR IFW FILES:

Please review the requested changes/corrections as shown in the **COCIN** document(s) in the IFW application image. No new matter should be introduced, nor should the scope or meaning of the claims be changed.

Please complete the response (see below) and forward the completed response to scanning using document code **COCX**.

FOR PAPER FILES:

Please review the requested changes/corrections as shown in the attached certificate of correction. Please complete this form (see below) and forward it with the file to:

Certificates of Correction Branch (CofC)
South Tower - 9A22
Palm Location 7580

E. James
Certificates of Correction Branch
703-308-9390 ext. _____

Are these the correct drawings?
Please response ASAP
Thank You For Your Assistance

The request for issuing the above-identified correction(s) is hereby:
Note your decision on the appropriate box.

- ☐ **Approved** — All changes apply.
- ☐ **Approved in Part** — Specify below which changes **do not** apply.
- ☐ **Denied** — State the reasons for denial below.

Comments: _____

CATHRON C. BROOKS
SUPERVISORY PATENT EXAMINER

SPE **Art Unit**

UNITED STATES PATENT AND TRADEMARK OFFICE

COMMISSIONER FOR PATENTS
UNITED STATES PATENT AND TRADEMARK OFFICE
P.O. BOX 1450
ALEXANDRIA, VA 22313-1450
www.uspto.gov

FISH & RICHARDSON PC
P.O. BOX 1022
MINNEAPOLIS, MN 55440-1022

COPY MAILED

FEB 13 2008

OFFICE OF PETITIONS

In re Application of
Adam A. Carr, et al.
Application No. 29/259,451
Filed: May 9, 2006
Attorney Docket No. 02103-783001/B007

: DECISION GRANTING PETITION
: UNDER 37 CFR 1.313(c)(3) (CPA)

This is a decision on the petition under 37 CFR 1.313(c)(3), filed February 11, 2008, to withdraw the above-identified application from issue after payment of the issue fee.

The petition is **GRANTED**.

The above-identified application is hereby withdrawn from issue in favor of a continued prosecution application (CPA) under 37 CFR 1.53(d).

Petitioner is advised that the issue fee paid on October 26, 2007 in the parent application is not refundable nor can it be applied towards any new Notice of Allowance which may issue on the CPA filed February 11, 2008.

The file does not indicate a change of address has been submitted, although the address given on the petition differs from the address of record. If appropriate, a change of address should be filed in accordance with MPEP 601.03. A courtesy copy of this decision is being mailed to the address given on the petition; however, the Office will mail all future correspondence solely to the address of record.

This matter is being referred to Technology Center AU 2912 for processing of the CPA and consideration of the concurrently filed Information Disclosure Statement (IDS).

Telephone inquiries should be directed to the undersigned at (571) 272-3204.

Sherry D. Brinkley
Petitions Examiner
Office of Petitions

cc: FISH & RICHARDSON, P.C.
225 FRANKLIN STREET
BOSTON, MA 02110

UNITED STATES PATENT AND TRADEMARK OFFICE

Commissioner for Patents
United States Patent and Trademark Office
P.O. Box 1450
Alexandria, VA 22313-1450
www.uspto.gov

OSTROLENK FABER GERB & SOFFEN
1180 AVENUE OF THE AMERICAS
NEW YORK NY 10036-8403

COPY MAILED

JUL 14 2008

OFFICE OF PETITIONS

In re
William Pedersen
Application No. 29/259,452
Filed: May 9, 2006
Patent No. D564,703
Issued: March 18, 2008
Attorney Docket No. D/3687-74

DECISION

This is a decision on the fee deficiency submission under 37 CFR 1.28(c), filed May 13, 2008.

The fee deficiency submission under 37 CFR 1.28 of $410, representing the difference between the small entity and large entity issue fee is hereby **accepted**.

The change of status to a large entity has been entered and made of record.

Telephone inquiries concerning this matter may be directed to the undersigned at (571) 272-3207.

Cliff Congo
Petitions Attorney
Office of Petitions

UNITED STATES PATENT AND TRADEMARK OFFICE

Commissioner for Patents
United States Patent and Trademark Office
P.O. Box 1450
Alexandria, VA 22313-1450
www.uspto.gov

TROXELL LAW OFFICE PLLC
SUITE 1404
5205 LEESBURG PIKE
FALLS CHURCH, VA 22041

COPY MAILED

JUL 1 8 2008

OFFICE OF PETITIONS

In re Application of	:	
Yun-Chi HU	:	
Application No. 29/259,477	:	DECISION ON PETITION
Filed: May 10, 2006	:	
Attorney Docket No. BHT-3106-411	:	

This is a decision on the petition under the unintentional provisions of 37 CFR 1.137(b), filed May 15, 2008, to revive the above-identified design application.

The petition is **GRANTED**.

The application became abandoned for failure to timely pay the issue fee on or before September 7, 2007, as required by the Notice of Allowance and Fee(s) Due, mailed June 7, 2007, which set a statutory period for reply of three (3) months. Accordingly, the application became abandoned on September 8, 2007.

The petition satisfies the requirements of 37 CFR 1.137(b) in that petitioner has supplied (1) the reply in the form of payment of the Issue Fee of $410; (2) the petition fee of $770; (3) the required statement of unintentional delay; and (4) a Terminal Disclaimer.

The Terminal Disclaimer is accepted and has been made of record.

Telephone inquiries concerning this decision should be directed to Diane Goodwyn at (571) 272-6735.

This application is being referred to the Office of Data Management for processing.

Thurman K Page

Thurman Page
Petitions Examiner
Office of Petitions

OIPE
MAY 15 2008
PATENT & TRADEMARK OFFICE

Serial No. 29/259,477
Attorney Docket: BHT-3106-411

PETITION FOR REVIVAL OF AN APPLICATION FOR PATENT ABANDONED UNINTENTIONALLY UNDER 37 CFR 1.137(b)	Docket Number: BHT/3106-411

First named inventor: **Yun-Chi HU**

Application No: **29/259,477** Group Art Unit: **2913**

Filed: **May 10, 2006** Examiner: **J.E. Seeger**

Title: **DESK**

Attention: **Office of Petitions**
Commissioner Of Patents
P.O. Box 1450
Alexandria, VA 22313-1450

The above-identified application became abandoned for failure to file a timely and proper reply to a notice or action by the United States Patent and Trademark Office. The date of abandonment is the day after the expiration date of the period set for reply in the Office notice or action plus any extensions of time actually obtained.

APPLICANT HEREBY PETITIONS FOR REVIVAL OF THIS APPLICATION

NOTE: A grantable petition requires the following items:
(1) Petition fee;
(2) Reply and/or issue fee;
(3) Terminal disclaimer with disclaimer fee -- required for all utility and plant applications filed before June 8, 1995; and for all design applications; and
(4) Statement that the entire delay was unintentional.

1. Petition fee

☒ **Small entity-fee $770 (37 CFR 1.17(m). Applicant claims small entity status. See 37 CFR 1.27.**
☐ Other than small entity-fee $_____ (37 CFR 1.17(m)
☒ **A check is hereby given in the amount of $770 to cover the Small Entity Petition to Revive Unintentionally Abandoned Application.**

2. Reply and/or fee

A. The reply and/or fee to the above-noted Notice of Allowance in the form of_____ (identify type of reply):
☐ has been filed previously on _____
☒ **is enclosed herewith.**

05/16/2008 AWONDAF2 00000003 29259477
01 FC:2453 770.00 OP

B. **The issue fee of $410**
☐ has been paid previously on_____
☒ **A check is hereby given in the amount of $410 to cover the Small Entity Issue and Publication fees.**

3. Terminal disclaimer with disclaimer fee
   ☐ Since this utility/plant application was filed on or after June 8, 1995, no terminal disclaimer is required.
   ☒ **A terminal disclaimer (and disclaimer fee (37 CFR 1.20(d)) of $65 for a small entity or $____for other than a small entity) disclaiming the required period of time is enclosed herewith (see PTO/SB/63).**

4. STATEMENT: The entire delay in filing the required reply from the due date for the required reply until the filing of the grantable petition under 37 CFR 1.137(b) was unintentional. [NOTE: The United States Patent and Trademark Office may require additional information if there is a question as to whether either the abandonment or the delay in filing a petition under 37 CFR 1.137(b) was unintentional (MPEP 711.02(c), subsections (III)(C) and (D))].

May 14, 2008
Date

Signature

Telephone Number **(703) 575-2711**

Bruce H. Troxell - Reg.No. 26,592
Typed or printed name

TROXELL LAW OFFICE PLLC
5205 Leesburg Pike, Suite 1404
Falls Church, VA 22041
Telephone: (703) 575-2711
Telefax: (703) 575-2707

Enclosures:
☒ **Issue Fee and Petition Fee Payment**
☐ Reply
☒ **Terminal Disclaimer Form and Payment**
☐ Additional sheets containing statements establishing unintentional delay
☐ Other: _____

OIPE IAP87
MAY 15 2008
PATENT & TRADEMARK OFFICE

PTO/SB/63 (01-08)
Approved for use through 05/31/2008. OMB 0651-0031
U.S. Patent and Trademark Office; U.S. DEPARTMENT OF COMMERCE
Under the Paperwork Reduction Act of 1995, no persons are required to a collection of information unless it displays a valid OMB control number.

TERMINAL DISCLAIMER TO ACCOMPANY PETITION

Docket Number (Optional)

In re Application of:

Name: Yun-Chi HI

Application Number: 29/259,477

Filed: May 10, 2008

For: DESK

The owner*, Yun-Chi HU of 100 percent interest in the above-identified application hereby disclaims a terminal part of the term of any patent granted the above-identified application equivalent to: (1) if the above-identified application is a design application, the period of abandonment of the above-identified application, and (2) if the above-identified application is a utility or plant application, the lesser of: (a) the period of abandonment of the application; or (b) the period extending beyond twenty years from the date on which the above-identified application was filed in the United States or, if the application contains a specific reference to an earlier filed application(s) under 35 U.S.C. 120, 121, or 365(c), from the date on which the earliest such application was filed. This disclaimer also applies to any patent granted on a utility or plant application filed before June 8, 1995, or a design application, that contains a specific reference under 35 U.S.C. 120, 121, or 365(c) to the above-identified application. This disclaimer is binding upon the grantee, and its successors or assigns.

Check either box 1 or 2 below, if appropriate.

1. ☐ For submissions on behalf of an organization (e.g., corporation, partnership, university, government agency, etc.), the undersigned is empowered to act on behalf of the organization.
2. ☑ The undersigned is an attorney or agent of record. Registration Number 26,592.

Signature — Date: MAY 15, 2008

BRUCE H. TROXELL (Typed or Printed Name) — Telephone Number: 703-575-2711

☑ Terminal disclaimer fee under 37 CFR 1.20(d) included.

WARNING: Information on this form may become public. Credit card information should not be included on this form. Provide credit card information and authorization on PTO-2038.

* Statement under 37 CFR 3.73(b) is required if terminal disclaimer is signed by the assignee (owner). Form PTO/SB/96 may be used for making this certification. See MPEP § 324.

This collection of information is required by 37 CFR 1.137. The information is required to obtain or retain a benefit by the public which is to file (and by the USPTO to process) an application. Confidentiality is governed by 35 U.S.C. 122 and 37 CFR 1.11 and 1.14. This collection is estimated to take 12 minutes to complete, including gathering, preparing, and submitting the completed application form to the USPTO. Time will vary depending upon the individual case. Any comments on the amount of time you require to complete this form and/or suggestions for reducing this burden, should be sent to the Chief Information Officer, U.S. Patent and Trademark Office, U.S. Department of Commerce, P.O. Box 1450, Alexandria, VA 22313-1450. DO NOT SEND FEES OR COMPLETED FORMS TO THIS ADDRESS. SEND TO: **Commissioner for Patents, P.O. Box 1450, Alexandria, VA 22313-1450.**

If you need assistance in completing the form, call 1-800-PTO-9199 and select option 2.

05/16/2008 AWONDAF2 00000003 29259477
02 FC:2814 65.00 OP

UNITED STATES PATENT AND TRADEMARK OFFICE

Commissioner for Patents
United States Patent and Trademark Office
P.O. Box 1450
Alexandria, VA 22313-1450
www.uspto.gov

CHARLES C.H. WU
98 DISCOVERY
IRVINE, CA 92618-3105

COPY MAILED

APR 16 2008

In re Application of	:	
Corey Kiesel	:	
Application No. 29/259,486	:	ON PETITION
Filed: May 9, 2006	:	
Attorney Docket No. 997-06033103	:	
	:	

This is a decision on the petition under 37 CFR 1.137(b), filed on December 7, 2006 and supplemented on October 5, 2007, to revive the above-identified application.

The application became abandoned for failure to respond to the Notice of Allowability mailed June 22, 2006. A Notice of Abandonment was mailed on November 8, 2006.

The petition is **DISMISSED.**

A grantable petition under 37 CFR 1.137(b) must be accompanied by: (1) the required reply, unless previously filed; (2) the petition fee as set forth in 37 CFR 1.17(m); (3) a statement that the entire delay in filing the required reply from the due date for the reply until the filing of a grantable petition pursuant to 37 CFR 1.137(b) was unintentional; and (4) any terminal disclaimer (and fee as set forth in 37 CFR 1.20(d)) required by 37 CFR 1.137(d). Where there is a question as to whether either the abandonment or the delay in filing a petition under 37 CFR 1.137 was unintentional, the Commissioner may require additional information. See MPEP 711.03(c)(III)(C) and (D). The instant petition lacks item(s) (3).

The petition filed on December 7, 2006 and the supplemental petition filed on October 5, 2007 both fail to contain the statement required by 37 CFR 1.137(b), which states that the entire delay in filing the required reply from the due date for the reply until the filing of a grantable petition pursuant to 37 CFR 1.137(b) was unintentional. Therefore, this application cannot be revived until the required statement has been submitted.

Any request for reconsideration of this decision must be submitted within **TWO (2) MONTHS** from the mail date of this decision. Extensions of time under 37 CFR 1.136(a) are permitted. The reconsideration request should include a cover letter entitled "Renewed Petition under 37 CFR 1.137(b)." This is **not** a final agency action within the meaning of 35 U.S.C. § 704.

Further correspondence with respect to this matter should be addressed as follows:

By Mail: Mail Stop PETITION
Commissioner for Patents
P. O. Box 1450
Alexandria, VA 22313-1450

By hand: U. S. Patent and Trademark Office
Customer Service Window, Mail Stop Petitions
Randolph Building
401 Dulany Street
Alexandria, VA 22314

The centralized facsimile number is **(571) 273-8300.**

Correspondence regarding this decision may also be filed through the electronic filing system of the USPTO.

To expedite consideration, petitioner may wish to contact the undersigned regarding the filing of the renewed petition under 37 CFR 1.137(b).

Telephone inquiries concerning this decision should be directed to the undersigned at (571) 272-3226.

Andrea Smith
Petitions Examiner
Office of Petitions

UNITED STATES PATENT AND TRADEMARK OFFICE

Commissioner for Patents
United States Patent and Trademark Office
P.O. Box 1450
Alexandria, VA 22313-1450
www.uspto.gov

CHARLES C.H. WU
98 DISCOVERY
IRVINE, CA 92618-3105

COPY MAILED

APR 1 8 2008

OFFICE OF PETITIONS

In re Application of
Corey Kiesel
Application No. 29/259,486
Filed: May 9, 2006
Attorney Docket No. 997-06033103

ON PETITION

This is a decision on the supplemental petition under 37 CFR 1.137(b), filed on April 17, 2008, which is being treated as a renewed petition to revive the above-identified application.

The petition satisfies the requirements of 37 CFR 1.137(b), in that, petitioner has supplied (1) the reply in the form of two sheets of corrected drawings containing Figures 1-2, and $65 for the filing of a terminal disclaimer; (2) the petition fee of $750; and (3) a proper statement of unintentional delay. Therefore, the petition is **GRANTED**.

The terminal disclaimer under 37 CFR 1.137(d), filed October 5, 2007, has been accepted and made of record. Any continuing application filed from this application must contain a copy of the terminal disclaimer. The copy of the terminal disclaimer must be filed with a cover letter requesting the terminal disclaimer be recorded on the continuing application. A copy of this decision should be attached to the cover letter.

This application file is being referred to the Office of Data Management for further processing into a patent.

Telephone inquiries concerning this decision should be directed to the undersigned at (571) 272-3226.

Andrea Smith
Petitions Examiner
Office of Petitions

UNITED STATES PATENT AND TRADEMARK OFFICE

Commissioner for Patents
United States Patent and Trademark Office
P.O. Box 1450
Alexandria, VA 22313-1450
www.uspto.gov

FISH & RICHARDSON PC
P.O. BOX 1022
MINNEAPOLIS MN 55440-1022

COPY MAILED

JAN 07 2008

OFFICE OF PETITIONS

In re Application of
CARR, et al.
Application No. 29/259,496
Filed: May 9, 2006
Attorney Docket No. **02103-783002/B008**

DECISION DISMISSING PETITION
UNDER 37 CFR 1.313(c)(2)

This is a decision on the petition under 37 CFR 1.313(c)(2), filed January 4, 2008, to withdraw the above-identified application from issue after payment of the issue fee.

The petition is **DISMISSED AS MOOT.**

Petitioner's attention is directed to 37 CFR 1.313(d), which states:

> A petition under this section will not be effective to withdraw the application from issue unless it is actually received and granted by the appropriate officials **before the date of issue.** (Emphasis added)

In this case, the petition was not received in the Office of Petitions for consideration until January 4, 2008 the application issued into Patent No. D558735 on January 1, 2008. Therefore, the petition to withdraw from issue cannot be granted.

The request for continuation under 37 CFR 1.53(d) filed concurrently with the petition is improper in view of the issuance of this application into a patent and will not be processed. Accordingly, the $210 filing fee and the $130 petition fee submitted are unnecessary and will be refunded in due course.

The Information Disclosure Statement has been made of record in the file of the above-identified application without further consideration. *See* 37 CFR 1.97(i).

Petitioner is advised, that while petitions to withdraw from issue may be mailed to the Commissioner for Patents, as was done in this case, applicants were cautioned to hand carry or fax petitions to withdraw from issue directly to the Office of Petitions. *See* MPEP § 1308.

Telephone inquiries should be directed to Monica A. Graves at (571) 272-7253.

Karen Creasy

Karen Creasy
Petitions Examiner
Office of Petitions

COPY

Attorney's Docket No.: 02103-783002 / B008

IN THE UNITED STATES PATENT AND TRADEMARK OFFICE

Applicant	: Adam A. Carr, et al.	Art Unit	: 2912
Patent No.	: D558,735	Examiner	: Paula Allen Greene
Issue Date	: January 1, 2008	Conf. No.	: 5622
Serial No.	: 29/259,496		
Filed	: May 9, 2006		
Title	: EARPHONE DESIGN		

PETWDISS mat 1/4/08

Commissioner for Patents
P.O. Box 1450
Alexandria, VA 22313-1450

PETITION TO WITHDRAW

Application owner hereby petitions under §1.313(c)(3) for the withdrawal of this application from issue to permit consideration of an Information Disclosure Statement filed in a continuing application. The issue fee was paid on October 24, 2007.

A request for continued examination of this application under 37 C.F.R. §1.53(d) is being filed simultaneously herewith.

Please apply any other charges or credits to Deposit Account No. 06-1050, referencing attorney docket no. 02103-783002.

Respectfully submitted,

Date: 1/3/8

David L. Feigenbaum
Reg. No. 30,378

Fish & Richardson P.C.
225 Franklin Street
Boston, MA 02110
Telephone: (617) 542-5070
Facsimile: (617) 542-8906

21820837.doc

Adjustment date: 01/07/2008 CKHLOK
01/04/2008 INTEFSW 00006507 061050 29259496
01 FC:1017 210.00 CR
02 FC:1464 130.00 CR

CERTIFICATE OF MAILING BY EFS-WEB FILING

I hereby certify that this paper was filed with the Patent and Trademark Office using the EFS-WEB system on this date: January 04, 2008

COPY

Attorney's Docket No.: 02103-783002 / B008

IN THE UNITED STATES PATENT AND TRADEMARK OFFICE

Applicant	: Adam A. Carr, et al.	Art Unit	: 2912
Patent No.	: D558,735	Examiner	: Paula Allen Greene
Issue Date	: January 1, 2008	Conf. No.	: 5622
Serial No.	: 29/259,496		
Filed	: May 9, 2006		
Title	: EARPHONE DESIGN		

MAIL STOP RCE
Commissioner for Patents
P.O. Box 1450
Alexandria, VA 22313-1450

INFORMATION DISCLOSURE STATEMENT

Please consider the reference listed on the attached PTO-1449 form.

Copies of non-U.S. patent documents are enclosed.

This filing is being made with the filing of a request for a continuation under 37 CFR §1.53(d). No fee is required. Please apply any charges or credits to deposit account 06-1050, referencing attorney docket no. 02103-783002.

Respectfully submitted,

Date: 1/3/8

David L. Feigenbaum
Reg. No. 30,378

Fish & Richardson P.C.
225 Franklin Street
Boston, MA 02110
Telephone: (617) 542-5070
Facsimile: (617) 542-8906

21820876.doc

CERTIFICATE OF MAILING BY EFS-WEB FILING

I hereby certify that this paper was filed with the Patent and Trademark Office using the EFS-WEB system on this date: January 04, 2008

UNITED STATES PATENT & TRADEMARK OFFICE
Washington, D.C. 20231

REQUEST FOR PATENT FEE REFUND

1 Date of Request: 01/04/08

2 Serial/Patent # 29/259,496

	3 Please refund the following fee(s):	4 PAPER NUMBER	5 DATE FILED	6 AMOUNT
	Filing			$
	Amendment			$
	Extension of Time			$
	Notice of Appeal/Appeal			$
X	Petition 1464	PETWDISS	01/04/08	$ 130.00
	Issue			$
	Cert of Correction/Terminal Disc.			$
	Maintenance			$
	Assignment			$
X	Other CONTINUED PROSECUTION APPL 1017	ACPA	01/04/08	$ 210.00

7 TOTAL AMOUNT OF REFUND $ 340.00

8 TO BE REFUNDED BY:

	Treasury Check
X	Credit Deposit A/C #:

9 0 6 -- 1 0 5 0

10 REASON:

	Overpayment
	Duplicate Payment
X	No Fee Due (Explanation):

Request to withdraw filed after application had already issued. Petition and CPA fees unnecessary.

11 REFUND REQUESTED BY:

TYPED/PRINTED NAME: Monica A. Graves TITLE: Paralegal Specialist

SIGNATURE: Monica A. Graves PHONE: (571) 272-7253

OFFICE: Office of Petitions

****

THIS SPACE RESERVED FOR FINANCE USE ONLY:

APPROVED: CKhb DATE: 1/7/08

Instructions for completion of this form appear on the back. After completion, attach white and yellow copies to the official file and mail or hand-carry to:

Office of Finance
Refund Branch
Crystal Park One, Room 802B

FORM PTO 1577
(01/90)

UNITED STATES PATENT AND TRADEMARK OFFICE

Commissioner for Patents
United States Patent and Trademark Office
P.O. Box 1450
Alexandria, VA 22313-1450
www.uspto.gov

JORDAN AND HAMBURG LLP
122 EAST 42ND STREET
SUITE 4000
NEW YORK NY 10168

COPY MAILED

JUL 18 2008

In re Application of Hatta, et al. Application No. 29/259,506 Filing Date: 10 May, 2006 Attorney Docket No. F-9082	: : : : :	DECISION

This is a decision on the petition filed on 5 November, 2007, and resubmitted on 6 February, 2008, to revive an application under 37 C.F.R. §1.137(b) as having been abandoned due to unintentional delay.

The petition is **DISMISSED**.

Any request for reconsideration of this decision must be submitted within TWO (2) MONTHS from the mail date of this decision. Extensions of time under 37 CFR §1.136(a) are permitted. The reconsideration request should include a cover letter entitled "Renewed Petition under 37 CFR §1.137(b)." This is **not** a final agency action within the meaning of 5 U.S.C. §704.

As to the Allegations
of Unintentional Delay

The requirements of a grantable petition pursuant to 37 C.F.R. §1.137(b) are the petition and fee therefor, a reply, a proper statement of unintentional delay under the regulation, and, where applicable, a terminal disclaimer and fee as, required, *inter alia*, for a design application.

Where there is a question as to whether either the abandonment or the delay in filing a petition under 37 CFR §1.137 was unintentional, the Director may require additional information. See MPEP §711.03(c)(II)(C) and (D).

It appears that Petitioner has not satisfied the requirements of the regulation, to wit: Terminal Disclaimer and fee. (See also: MPEP §711.03(c).)

BACKGROUND

The record reflects that:

Petitioner failed to reply timely and properly to the Notice of Allowance/Allowability and Fees Due mailed on 27 July, 2007, with reply due under a non-extendable deadline on or before Monday, 29 October, 2007.

The application went abandoned after midnight 29 October, 2007.

The Office mailed the Notice of Abandonment on 24 January, 2008.

On 5 November, 2007, Petitioner filed the instant petition (with fee) and the reply in the form of fees due (and appears to have resubmitted the petition on 6 February, 2008, in reply to the Notice of Abandonment) and made the statement of unintentional delay, however, Petitioner failed to file the Terminal Disclaimer (with fee) as required with a petition addressing a design application.

The availability of applications and application papers online to applicants/practitioners who diligently associate their Customer Number with the respective application(s) now provides an applicant/practitioner on-demand information as to events/transactions in an application. Thus, now if one wishes to know the progress in and/or status of an application or the accuracy of the data therein, one need only look at the file online.

Out of an abundance of caution, Petitioners always are reminded that those registered to practice *and* all others who make representations before the Office must inquire into the underlying facts of representations made to the Office and support averments with the appropriate documentation–since all owe to the Office the continuing duty to disclose.[1]

STATUTES, REGULATIONS

Congress has authorized the Commissioner to "revive an application if the delay is shown to the satisfaction of the Commissioner to have been "unavoidable." 35 U.S.C. §133 (1994).

---

[1] See supplement of 17 June, 1999. The Patent and Trademark Office is relying on petitioner's duty of candor and good faith and accepting a statement made by Petitioner. See Changes to Patent Practice and Procedure, 62 Fed. Reg. at 53160 and 53178, 1203 Off. Gaz. Pat. Office at 88 and 103 (responses to comments 64 and 109)(applicant obligated under 37 C.F.R. §10.18 to inquire into the underlying facts and circumstances when providing statements to the Patent and Trademark Office). See specifically, the regulations at 37 C.F.R. §10.18.

The regulations at 37 C.F.R. §1.137(a) and (b) set forth the requirements for a Petitioner to revive a previously unavoidably or unintentionally, respectively, abandoned application.[2],[3]

CONCLUSION

The instant petition under 37 C.F.R. §1.137(b) is **dismissed**.

Further correspondence with respect to this matter should be addressed as follows:

By Mail: Mail Stop PETITION
Commissioner for Patents
P. O. Box 1450
Alexandria, VA 22313-1450

By hand: U. S. Patent and Trademark Office
Customer Service Window, Mail Stop Petitions
Randolph Building
401 Dulany Street
Alexandria, VA 22314

The centralized facsimile number is **(571) 273-8300.**

---

[2] See: Changes to Patent Practice and Procedure; Final Rule Notice, 62 Fed. Reg. at 53158-59 (October 10, 1997), 1203 Off. Gaz. Pat. Office at 86-87 (October 21, 1997).

[3] The language of 35 U.S.C. §133 and 37 C.F.R. §1.137(a) is clear, unambiguous, and without qualification: the delay in tendering the reply to the outstanding Office action, as well as filing the first petition seeking revival, must have been unavoidable for the reply now to be accepted on petition. (Therefore, by example, an unavoidable delay in the payment of the Filing Fee might occur if a reply is shipped by the US Postal Service, but due to catastrophic accident, the delivery is not made.) Delays in responding properly raise the question whether delays are unavoidable. Where there is a question whether the delay was unavoidable, Petitioners must meet the burden of establishing that the delay was unavoidable within the meaning of 35 U.S.C. §133 and 37 C.F.R. §1.137(a) And the Petitioner must be diligent in attending to the matter. Failure to do so does not constitute the care required under Pratt, and so cannot satisfy the test for diligence and due care. (By contrast, unintentional delays are those that do not satisfy the very strict statutory and regulatory requirements of unavoidable delay, and also, by definition, are not intentional.))

While telephone inquiries regarding this decision may be directed to the undersigned at (571) 272-3214, it is noted that all practice before the Office is in writing (see: 37 C.F.R. §1.2[4]) and the proper authority for action on any matter in this regard are the statutes (35 U.S.C.), regulations (37 C.F.R.) and the commentary on policy (MPEP). Therefore, no telephone discussion may be controlling or considered authority for Petitioner's action(s).

/John J. Gillon, Jr./
John J. Gillon, Jr.
Senior Attorney
Office of Petitions

---

[4] The regulations at 37 C.F.R. §1.2 provide:

§1.2 Business to be transacted in writing.

All business with the Patent and Trademark Office should be transacted in writing. The personal attendance of applicants or their attorneys or agents at the Patent and Trademark Office is unnecessary. The action of the Patent and Trademark Office will be based exclusively on the written record in the Office. No attention will be paid to any alleged oral promise, stipulation, or understanding in relation to which there is disagreement or doubt.

UNITED STATES PATENT AND TRADEMARK OFFICE

Commissioner for Patents
United States Patent and Trademark Office
P.O. Box 1450
Alexandria, VA 22313-1450
www.uspto.gov

JORDAN AND HAMBURG LLP
122 EAST 42ND STREET
SUITE 4000
NEW YORK NY 10168

COPY MAILED

FEB 23 2009

OFFICE OF PETITIONS

In re Application of
Hatta, et al.
Application No. 29/259,506
Filing Date: 10 May, 2006
Attorney Docket No. F-9082

DECISION

This is a decision on the petition filed on 4 August, 2008, to revive an application under 37 C.F.R. §1.137(b) as having been abandoned due to unintentional delay.

The petition under 37 C.F.R. §1.137(b) is **GRANTED**.

As to the Allegations
of Unintentional Delay

The requirements of a grantable petition pursuant to 37 C.F.R. §1.137(b) are the petition and fee therefor, a reply, a proper statement of unintentional delay under the regulation, and, where applicable, a terminal disclaimer and fee as, required, *inter alia*, for a design application.

BACKGROUND

The record reflects that:

Petitioner failed to reply timely and properly to the Notice of Allowance/Allowability and Fees Due mailed on 27 July, 2007, with reply due under a non-extendable deadline on or before Monday, 29 October, 2007.

The application went abandoned after midnight 29 October, 2007.

The Office mailed the Notice of Abandonment on 24 January, 2008.

On 5 November, 2007, Petitioner filed a petition (with fee) and the reply in the form of fees due (and appears to have resubmitted the petition on 6 February, 2008, in reply to the Notice of

Abandonment) and made the statement of unintentional delay, however, Petitioner failed to file the Terminal Disclaimer (with fee) as required with a petition addressing a design application—and the petition was dismissed on 18 July, 2008.

On 4 August, 2008, Petitioner renewed the petition (with fee previously paid), reply in the form of the fees due (previously paid), statement of unintentional delay and terminal disclaimer and fee.

The availability of applications and application papers online to applicants/practitioners who diligently associate their Customer Number with the respective application(s) now provides an applicant/practitioner on-demand information as to events/transactions in an application. Thus, now if one wishes to know the progress in and/or status of an application or the accuracy of the data therein, one need only look at the file online.

Out of an abundance of caution, Petitioners always are reminded that those registered to practice *and* all others who make representations before the Office must inquire into the underlying facts of representations made to the Office and support averments with the appropriate documentation–since all owe to the Office the continuing duty to disclose.[1]

STATUTES, REGULATIONS

Congress has authorized the Commissioner to "revive an application if the delay is shown to the satisfaction of the Commissioner to have been "unavoidable." 35 U.S.C. §133 (1994).

The regulations at 37 C.F.R. §1.137(a) and (b) set forth the requirements for a Petitioner to revive a previously unavoidably or unintentionally, respectively, abandoned application.[2],[3]

As to Allegations of Unintentional Delay

It appears that the requirements under 37 C.F.R. §1.137(b) have been satisfied.

---

[1] See supplement of 17 June, 1999. The Patent and Trademark Office is relying on petitioner's duty of candor and good faith and accepting a statement made by Petitioner. See Changes to Patent Practice and Procedure, 62 Fed. Reg. at 53160 and 53178, 1203 Off. Gaz. Pat. Office at 88 and 103 (responses to comments 64 and 109)(applicant obligated under 37 C.F.R. §10.18 to inquire into the underlying facts and circumstances when providing statements to the Patent and Trademark Office). See specifically, the regulations at 37 C.F.R. §10.18.

[2] See: Changes to Patent Practice and Procedure; Final Rule Notice, 62 Fed. Reg. at 53158-59 (October 10, 1997), 1203 Off. Gaz. Pat. Office at 86-87 (October 21, 1997).

[3] The language of 35 U.S.C. §133 and 37 C.F.R. §1.137(a) is clear, unambiguous, and without qualification: the delay in tendering the reply to the outstanding Office action, as well as filing the first petition seeking revival, must have been unavoidable for the reply now to be accepted on petition. (Therefore, by example, an unavoidable delay in the payment of the Filing Fee might occur if a reply is shipped by the US Postal Service, but due to catastrophic accident, the delivery is not made.) Delays in responding properly raise the question whether delays are unavoidable. Where there is a question whether the delay was unavoidable, Petitioners must meet the burden of establishing that the delay was unavoidable within the meaning of 35 U.S.C. §133 and 37 C.F.R. §1.137(a) And the Petitioner must be diligent in attending to the matter. Failure to do so does not constitute the care required under Pratt, and so cannot satisfy the test for diligence and due care. (By contrast, unintentional delays are those that do not satisfy the very strict statutory and regulatory requirements of unavoidable delay, and also, by definition, are not intentional.))

CONCLUSION

Accordingly, The petition under 37 C.F.R. §1.137(b) is **granted**.

The instant application is released to Publications Branch to be processed into a patent in due course.

Petitioner may find it beneficial to view Private PAIR within a fortnight of the instant decision to ensure that the revival has been acknowledged by the Publications Branch in response to this decision. It is noted that all inquiries with regard to that change in status need be directed to the Publications Branch where that change of status must be effected—that does not occur in the Office of Petitions.

Telephone inquiries regarding this decision may be directed to the undersigned at (571) 272-3214—it is noted, however, that all practice before the Office is in writing (see: 37 C.F.R. §1.2[4]) and the proper authority for action on any matter in this regard are the statutes (35 U.S.C.), regulations (37 C.F.R.) and the commentary on policy (MPEP). Therefore, no telephone discussion may be controlling or considered authority for Petitioner's action(s).

/John J. Gillon, Jr./
John J. Gillon, Jr.
Senior Attorney
Office of Petitions

---

[4] The regulations at 37 C.F.R. §1.2 provide:
§1.2 Business to be transacted in writing.
All business with the Patent and Trademark Office should be transacted in writing. The personal attendance of applicants or their attorneys or agents at the Patent and Trademark Office is unnecessary. The action of the Patent and Trademark Office will be based exclusively on the written record in the Office. No attention will be paid to any alleged oral promise, stipulation, or understanding in relation to which there is disagreement or doubt.

UNITED STATES PATENT AND TRADEMARK OFFICE

COMMISSIONER FOR PATENTS
UNITED STATES PATENT AND TRADEMARK OFFICE
P.O. BOX 1450
ALEXANDRIA, VA 22313-1450
www.uspto.gov

THE ESTEE LAUDER COS, INC
155 PINELAWN ROAD
STE 345 S
MELVILLE, NY 11747

COPY MAILED

DEC 05 2007

OFFICE OF PETITIONS

In re Application of
Diane Kim, et al.
Application No. 29/259,524
Filed: May 10, 2006
Attorney Docket No. 06.08

ON PETITION

This is a decision on the petition under 37 CFR 1.137(b), filed July 5, 2007, to revive the above-identified application.

The petition is **DISMISSED**.

Any request for reconsideration of this decision must be submitted within TWO (2) MONTHS from the mail date of this decision. Extensions of time under 37 CFR 1.136(a) are permitted. The reconsideration request should include a cover letter entitled "Renewed Petition under 37 CFR 1.137(b)." This is **not** a final agency action within the meaning of 5 U.S.C. § 704.

A review of the record discloses that a Notice of Allowance was mailed on November 15, 2006. On November 21, 2006, applicant filed a Request for Continued Examination under 37 CFR 1.114 (RCE); however, the RCE was considered improper since continued examination under 37 CFR 1.114 dose not apply to a design application. Consequently, the application became abandoned on February 16, 2007 for a failure to pay the issue fee. A Notice of Abandonment was mailed on June 1, 2007. On July 5, 2007 the present petition was filed, along with a request for a Continued Prosecution Application (CPA).

A grantable petition under 37 CFR 1.137(b)[1] must be accompanied by: (1) the required reply, unless previously filed; (2) the petition fee as set forth in 37 CFR 1.17(m); (3) a statement that the entire delay in filing the required reply from the due date for the reply until the filing of a grantable petition pursuant to 37 CFR 1.137(b) was unintentional; and (4) any terminal disclaimer (and fee as set forth in 37 CFR 1.20(d)) required by 37 CFR 1.137(c). Where there is a question as to whether either the abandonment or the delay in filing a petition under 37 CFR 1.137 was unintentional, the Commissioner may require additional information. See MPEP 711.03(c)(II)(C) and (D).

[1] As amended effective December 1, 1997. See Changes to Patent Practice and Procedure; Final Rule Notice, 62 Fed. Reg. 53131, 53194-95 (October 10, 1997), 1203 Off. Gaz. Pat. Office 63, 119-20 (October 21, 1997).

The petition lacks items (1) and (4) above.

As to item (1) In an application or patent, abandoned or lapsed for failure to pay the issue fee or any portion thereof, the required reply under 37 CFR 1.137(b) must be the payment of the issue fee or any outstanding balance thereof.

As to item (4) Since the above-identified application is a design application, 37 CFR 1.137(d) requires a terminal disclaimer dedicating to the public a terminal part of the term of any patent granted thereon equivalent to the period of abandonment of the application. The period of abandonment will be computed to be the number of months from the date of abandonment to the date of filing a grantable petition. A terminal disclaimer fee of $130 is required. If the terminal disclaimer is signed by an assignee, the assignee must comply with the requirements of 37 CFR 3.73(b).

Further correspondence with respect to this matter should be addressed as follows:

By mail: Mail Stop PETITION
Commissioner for Patents
Post Office Box 1450
Alexandria, VA 22313-1450

By hand: U.S. Patent and Trademark Office
Customer Service Window, Mail Stop PETITION
Randolph Building
401 Dulany Street
Alexandria, VA 22314

The centralized facsimile number is **(571) 273-8300**.

Any questions concerning this matter may be directed to the undersigned at (571) 272-3204.

Sherry D. Brinkley
Petitions Examiner
Office of Petitions

UNITED STATES PATENT AND TRADEMARK OFFICE

Commissioner for Patents
United States Patent and Trademark Office
P.O. Box 1450
Alexandria, VA 22313-1450
www.uspto.gov

THE ESTEE LAUDER COS, INC
155 PINELAWN ROAD
STE 345 S
MELVILLE, NY 11747

COPY MAILED

MAY 0 9 2008

OFFICE OF PETITIONS

In re Application of
Diane Kim, et al.
Application No. 29/259,524
Filed: May 10, 2006
Attorney Docket No. 06.08

ON PETITION

This is a decision on the renewed petition under 37 CFR 1.137(b) to revive the above-identified design application, filed December 12, 2007 and supplemented on February 27, 2008.

The petition is **GRANTED**.

A review of the record shows that a Notice of Allowance and Fee(s) Due was mailed on November 15, 2006. On November 21, 2006, an improper Request for Continued Examination (RCE) under 37 CFR 1.114 was filed. On June 1, 2007, a Notice of Abandonment was mailed. On July 5, 2007, a petition under 37 CFR 1.137(b) was filed, along with a Request for a Continued Prosecution Application (CPA). However, the petition was dismissed in a decision mailed December 5, 2007 since petitioner did not submit the requisite Terminal Disclaimer and issue fee. In response, on December 12, 2007 the renewed petition was filed, as well as the requisite issue fee and a Terminal Disclaimer. Thereafter on February 27, 2008 a replacement Terminal Disclaimer was filed.

Under the circumstances of this case, the $790 filing fees paid for the improper RCE on November 21, 2006 will be credited to counsel's deposit account and the issue fee payment of $820 is being charged to counsel's deposit account as authorized on December 12, 2007.

The petition satisfies the requirements of 37 CFR 1.137(b) in that petitioner has supplied (1) the reply in the form of the $820 issue fee, (2) the petition fee of $1,540, (3) an adequate statement of unintentional delay, and (4) a terminal disclaimer and fee as required by 37 CFR 1.137(d). Accordingly, the failure to timely pay the issue fee as required by the Notice of June 14, 2007 is accepted as being unintentionally delayed.

Petitioner is reminded that the issue fee paid on December 12, 2007 in the parent application is not refundable nor can it be applied towards the new Notice of Allowance resulting from the CPA filed July 5, 2007.

The terminal disclaimer filed February 27, 2008 has been accepted and made of record. Any continuing application filed from this application must contain a copy of the terminal disclaimer.

The copy of the terminal disclaimer must be filed with a cover letter requesting the terminal disclaimer be recorded on the continuing application. A copy of this decision should be attached to the cover letter.

In view of this decision, the application is being returned to Technology Center 2912 for further processing of the CPA filed on July 5, 2007.

Telephone inquiries regarding this decision should be directed to the undersigned at (571) 272-3204.

Sherry D. Brinkley
Petitions Examiner
Office of Petitions

UNITED STATES PATENT AND TRADEMARK OFFICE

Commissioner for Patents
United States Patent and Trademark Office
P.O. Box 1450
Alexandria, VA 22313-1450
www.uspto.gov

MACPHERSON KWOK CHEN & HEID LLP
2033 GATEWAY PLACE
SUITE 400
SAN JOSE CA 95110

COPY MAILED
SEP 0 6 2007
OFFICE OF PETITIONS

In re Application of	:	
Liu et al.	:	
Application No. 29/259,534	:	ON PETITION
Filed: May 9, 2006	:	
Attorney Docket No. DM-2060 US	:	

This is a decision on the petition under 37 C.F.R. § 1.137(b), filed August 29, 2007, to revive the above-identified application.

The petition is **DISMISSED**.

Any request for reconsideration must be submitted within TWO (2) MONTHS from the mail date of this decision. No further petition fee is required for the request. Extensions of time under 37 CFR 1.136(a) are permitted. The reconsideration request should include a cover letter entitled "Renewed Petition under 37 CFR 1.137(b)." This is **not** a final agency action within the meaning of 5 U.S.C. § 704.

A grantable petition under 37 CFR 1.137(b) must be accompanied by:
(1) the required reply,[1]
(2) the petition fee,
(3) a statement that the entire delay in filing the required reply from the due date for the reply until the filing of a grantable petition pursuant to 37 CFR 1.137(b) was unintentional, and
(4) a terminal disclaimer and fee if the application was filed on or before June 8, 1995 or if the application is a design application.

Where there is a question as to whether either the abandonment or the delay in filing a petition under 37 CFR 1.137 was unintentional, the Commissioner may require additional information.[2]

The instant petition lacks item (4). Since the instant application is a design application, a terminal disclaimer is required. A blank form is enclosed for petitioner's convenience.

Further correspondence with respect to this matter should be addressed as follows:

---

[1] In a nonprovisional application abandoned for failure to prosecute, the required reply may be met by the filing of a continuing application. In an application or patent, abandoned or lapsed for failure to pay the issue fee or any portion thereof, the required reply must be the payment of the issue fee or any outstanding balance thereof.

[2] See MPEP 711.03(c)(III)(C) and (D).

By mail: Mail Stop PETITIONS
Commissioner for Patents
Post Office Box 1450
Alexandria, VA 22313-1450

By hand: Customer Window located at:

U.S. Patent and Trademark Office
Customer Service Window Randolph Building
401 Dulany Street
Alexandria, VA 22314

By fax: (571) 273-8300
ATTN: Office of Petitions

Any questions concerning this matter may be directed to the undersigned at (571) 272-3206.

Liana Walsh
Petitions Examiner
Office of Petitions

Enclosure: PTO/SB/63

PTO/SB/63 (04-07)
Approved for use through 09/30/2007. OMB 0651-0031
U.S. Patent and Trademark Office; U.S. DEPARTMENT OF COMMERCE
Under the Paperwork Reduction Act of 1995, no persons are required to a collection of information unless it displays a valid OMB control number.

TERMINAL DISCLAIMER TO ACCOMPANY PETITION

Docket Number (Optional)

In re Application of:

Name:

Application Number:

Filed:

For:

The owner*, _____ of _____ percent interest in the above-identified application hereby disclaims a terminal part of the term of any patent granted the above-identified application equivalent to: (1) if the above-identified application is a design application, the period of abandonment of the above-identified application, and (2) if the above-identified application is a utility or plant application, the lesser of: (a) the period of abandonment of the application; or (b) the period extending beyond twenty years from the date on which the above-identified application was filed in the United States or, if the application contains a specific reference to an earlier filed application(s) under 35 U.S.C. 120, 121, or 365(c), from the date on which the earliest such application was filed. This disclaimer also applies to any patent granted on a utility or plant application filed before June 8, 1995, or a design application, that contains a specific reference under 35 U.S.C. 120, 121, or 365(c) to the above-identified application. This disclaimer is binding upon the grantee, and its successors or assigns.

Check either box 1 or 2 below, if appropriate.

1. ☐ For submissions on behalf of an organization (e.g., corporation, partnership, university, government agency, etc.), the undersigned is empowered to act on behalf of the organization.
2. ☐ The undersigned is an attorney or agent of record. Registration Number_____.

Signature	Date
Typed or Printed Name	Telephone Number

☐ Terminal disclaimer fee under 37 CFR 1.20(d) included.

WARNING: Information on this form may become public. Credit card information should not be included on this form. Provide credit card information and authorization on PTO-2038.

* Statement under 37 CFR 3.73(b) is required if terminal disclaimer is signed by the assignee (owner). Form PTO/SB/96 may be used for making this certification. See MPEP § 324.

This collection of information is required by 37 CFR 1.137. The information is required to obtain or retain a benefit by the public which is to file (and by the USPTO to process) an application. Confidentiality is governed by 35 U.S.C. 122 and 37 CFR 1.11 and 1.14. This collection is estimated to take 12 minutes to complete, including gathering, preparing, and submitting the completed application form to the USPTO. Time will vary depending upon the individual case. Any comments on the amount of time you require to complete this form and/or suggestions for reducing this burden, should be sent to the Chief Information Officer, U.S. Patent and Trademark Office, U.S. Department of Commerce, P.O. Box 1450, Alexandria, VA 22313-1450. DO NOT SEND FEES OR COMPLETED FORMS TO THIS ADDRESS. SEND TO: **Commissioner for Patents, P.O. Box 1450, Alexandria, VA 22313-1450.**

If you need assistance in completing the form, call 1-800-PTO-9199 and select option 2.

Privacy Act Statement

The **Privacy Act of 1974 (P.L. 93-579)** requires that you be given certain information in connection with your submission of the attached form related to a patent application or patent. Accordingly, pursuant to the requirements of the Act, please be advised that: (1) the general authority for the collection of this information is 35 U.S.C. 2(b)(2); (2) furnishing of the information solicited is voluntary; and (3) the principal purpose for which the information is used by the U.S. Patent and Trademark Office is to process and/or examine your submission related to a patent application or patent. If you do not furnish the requested information, the U.S. Patent and Trademark Office may not be able to process and/or examine your submission, which may result in termination of proceedings or abandonment of the application or expiration of the patent.

The information provided by you in this form will be subject to the following routine uses:

1. The information on this form will be treated confidentially to the extent allowed under the Freedom of Information Act (5 U.S.C. 552) and the Privacy Act (5 U.S.C 552a). Records from this system of records may be disclosed to the Department of Justice to determine whether disclosure of these records is required by the Freedom of Information Act.
2. A record from this system of records may be disclosed, as a routine use, in the course of presenting evidence to a court, magistrate, or administrative tribunal, including disclosures to opposing counsel in the course of settlement negotiations.
3. A record in this system of records may be disclosed, as a routine use, to a Member of Congress submitting a request involving an individual, to whom the record pertains, when the individual has requested assistance from the Member with respect to the subject matter of the record.
4. A record in this system of records may be disclosed, as a routine use, to a contractor of the Agency having need for the information in order to perform a contract. Recipients of information shall be required to comply with the requirements of the Privacy Act of 1974, as amended, pursuant to 5 U.S.C. 552a(m).
5. A record related to an International Application filed under the Patent Cooperation Treaty in this system of records may be disclosed, as a routine use, to the International Bureau of the World Intellectual Property Organization, pursuant to the Patent Cooperation Treaty.
6. A record in this system of records may be disclosed, as a routine use, to another federal agency for purposes of National Security review (35 U.S.C. 181) and for review pursuant to the Atomic Energy Act (42 U.S.C. 218(c)).
7. A record from this system of records may be disclosed, as a routine use, to the Administrator, General Services, or his/her designee, during an inspection of records conducted by GSA as part of that agency's responsibility to recommend improvements in records management practices and programs, under authority of 44 U.S.C. 2904 and 2906. Such disclosure shall be made in accordance with the GSA regulations governing inspection of records for this purpose, and any other relevant (*i.e.*, GSA or Commerce) directive. Such disclosure shall not be used to make determinations about individuals.
8. A record from this system of records may be disclosed, as a routine use, to the public after either publication of the application pursuant to 35 U.S.C. 122(b) or issuance of a patent pursuant to 35 U.S.C. 151. Further, a record may be disclosed, subject to the limitations of 37 CFR 1.14, as a routine use, to the public if the record was filed in an application which became abandoned or in which the proceedings were terminated and which application is referenced by either a published application, an application open to public inspection or an issued patent.
9. A record from this system of records may be disclosed, as a routine use, to a Federal, State, or local law enforcement agency, if the USPTO becomes aware of a violation or potential violation of law or regulation.

UNITED STATES PATENT AND TRADEMARK OFFICE

Commissioner for Patents
United States Patent and Trademark Office
P.O. Box 1450
Alexandria, VA 22313-1450
www.uspto.gov

MACPHERSON KWOK CHEN & HEID LLP
2033 GATEWAY PLACE
SUITE 400
SAN JOSE CA 95110

COPY MAILED
DEC 07 2007
OFFICE OF PETITIONS

In re Application of	:	
Liu et al.	:	
Application No. 29/259,534	:	DECISION ON PETITION
Filed: May 9, 2006	:	
Attorney Docket No. DM-2060 US	:	

This is a decision on the petition under the unintentional provisions of 37 CFR 1.137(b), filed October 1, 2007, to revive the above-identified application.

The petition is **GRANTED**.

The terminal disclaimer has now been submitted and hereby accepted.

Telephone inquiries concerning this decision should be directed to the undersigned at (571) 272-3206.

This matter is being referred to the Publishing Division for processing into a patent.

Liana Walsh
Petitions Examiner
Office of Petitions

UNITED STATES PATENT AND TRADEMARK OFFICE

Commissioner for Patents
United States Patent and Trademark Office
P.O. Box 1450
Alexandria, VA 22313-1450
www.uspto.gov

COPY MAILED

JUL 14 2008

OFFICE OF PETITIONS

Gail Ann Okray
913 Cornelius Drive
Green Bay WI 54311

In re Application of :
Seinkbeil, et al. :
Application No. 29/259,564 : ON PETITION
Filed: May 8, 2006 :
Attorney Docket No.

This is a decision on the petition to withdraw the holding of abandonment, filed June 9, 2008.

The petition is **DISMISSED**.

The application became abandoned on August 6, 2006, after no response was received to the Notice to File Missing Parts of Non-provisional Application mailed June 5, 2006, which set a shortened period for reply of two-months from its mailing date. No response was received within the allowable period, and the application became abandoned on August 6, 2006. A Notice of Abandonment was mailed May 13, 2008.

In the instant petition, petitioner maintains that the Notice to File Missing Parts of Non-provisional Application was never received.

When, as in this case petitioner is arguing that an Office communication was not received, petitioner must establish non-receipt of the Office communication in accordance with section 711.03(c) of the *Manual of Patent Examining Procedure* that requires the following:

> [t]he showing requires to establish non-receipt of an Office communication must include a statement from the practitioner stating that the Office communication was not received by the practitioner and attesting to the fact that a search of the file jacket and docket records indicates that the Office communication was not received. A copy of the docket record where the non-received Office communication would have been entered had it been received and docketed must be attached to and referenced in practitioner's statement.

Petitioner must make a statement that petitioner's records where searched, but the Office communication was not found. Petitioner must also provide a copy of petitioner's logs showing where the Office communication would have been entered if it had been received. If petitioner does not keep a log, petitioner may file a copy of the contents of the incoming correspondence petitioner has received for this application. Petitioner may also file a copy of any calendar notations petitioner maintains relative to this patent application that may corroborate petitioner's allegation that the notice was not received. This documentation must accompany any renewed petition filed under 37 CFR 1.181(a).

It is noted that petitioner provided a myriad of explanations for what may have happened to the Notice to File Missing Parts of Non-provisional Application one the notice arrived at petitioner's address. Petitioner is advised that the USPTO is only obligated to ensure that communications arrive at the

correspondence address of record. A petition to withdraw the holding of abandonment is not appropriate where correspondence is lost by petitioner, or petitioner's agents, once it arrives at the correspondence address of record. Under these circumstances, a petition under 37 CFR 1.137(b) is the appropriate vehicle for relief.

Alternatively, petitioner may revive the application based on unintentional abandonment under 37 CFR 1.137(b) (enclosed). A grantable petition pursuant to 37 CFR 1.137(b) must be accompanied by the required reply, the required petition fee ($1,540.00 for a large entity and $770.00 for a verified small entity), and a statement that the **entire** delay in filing the required reply from the due date for the reply until the filing of a grantable petition pursuant to 37 CFR 1.137(b) was unintentional.

Further correspondence with respect to this matter should be addressed as follows:

By mail: Commissioner for Patents
United States Patent and Trademark Office
Box 1450
Alexandria, VA 22313-1450

By facsimile: (571) 273-8300
Attn: Office of Petitions

Telephone inquiries concerning this decision should be directed to the undersigned (571) 272-3222.

Kenya A. McLaughlin
Petitions Attorney
Office of Petitions

Enclosures:
Form PTO/SB/64 and Terminal Disclaimer
Copy-- Notice to File Missing Parts of Non-provisional Application mailed June 5, 2006

PTO/SB/64 (01-08)
Approved for use through 07/31/2008. OMB 0651-0031
U.S. Patent and Trademark Office; U.S. DEPARTMENT OF COMMERCE
Under the Paperwork Reduction Act of 1995, no persons are required to respond to a collection of information unless it displays a valid OMB control number.

PETITION FOR REVIVAL OF AN APPLICATION FOR PATENT ABANDONED UNINTENTIONALLY UNDER 37 CFR 1.137(b)

Docket Number (Optional)

First named inventor:

Application No.: Art Unit:

Filed: Examiner:

Title:

Attention: Office of Petitions
Mail Stop Petition
Commissioner for Patents
P.O. Box 1450
Alexandria, VA 22313-1450
FAX (571) 273-8300

NOTE: If information or assistance is needed in completing this form, please contact Petitions Information at (571) 272-3282.

The above-identified application became abandoned for failure to file a timely and proper reply to a notice or action by the United States Patent and Trademark Office. The date of abandonment is the day after the expiration date of the period set for reply in the office notice or action plus an extensions of time actually obtained.

APPLICANT HEREBY PETITIONS FOR REVIVAL OF THIS APPLICATION

NOTE: A grantable petition requires the following items:
(1) Petition fee;
(2) Reply and/or issue fee;
(3) Terminal disclaimer with disclaimer fee - required for all utility and plant applications filed before June 8, 1995; and for all design applications; and
(4) Statement that the entire delay was unintentional.

1. Petition fee

☐ Small entity-fee $ _____ (37 CFR 1.17(m)). Applicant claims small entity status. See 37 CFR 1.27.

☐ Other than small entity – fee $ _____ (37 CFR 1.17(m))

2. Reply and/or fee

A. The reply and/or fee to the above-noted Office action in the form of _____(identify type of reply):

☐ has been filed previously on _____.
☐ is enclosed herewith.

B. The issue fee and publication fee (if applicable) of $ _____.

☐ has been paid previously on _____.
☐ is enclosed herewith.

This collection of information is required by 37 CFR 1.137(b). The information is required to obtain or retain a benefit by the public which is to file (and by the USPTO to process) an application. Confidentiality is governed by 35 U.S.C. 122 and 37 CFR 1.11 and 1.14. This collection is estimated to take 1.0 hour to complete, including gathering, preparing, and submitting the completed application form to the USPTO. Time will vary depending upon the individual case. Any comments on the amount of time you require to complete this form and/or suggestions for reducing this burden, should be sent to the Chief Information Officer, U.S. Patent and Trademark Office, U.S. Department of Commerce, P.O. Box 1450, Alexandria, VA 22313-1450. DO NOT SEND FEES OR COMPLETED FORMS TO THIS ADDRESS. **SEND TO: Mail Stop Petition, Commissioner for Patents, P.O. Box 1450, Alexandria, VA 22313-1450.**

If you need assistance in completing the form, call 1-800-PTO-9199 and select option 2.

Under the Paperwork Reduction Act of 1995, no persons are required to respond to a collection of information unless it displays a valid OMB control number.

3. Terminal disclaimer with disclaimer fee

☐ Since this utility/plant application was filed on or after June 8, 1995, no terminal disclaimer is required.

☐ A terminal disclaimer (and disclaimer fee (37 CFR 1.20(d)) of $ _____ for a small entity or $ _____ for other than a small entity) disclaiming the required period of time is enclosed herewith (see PTO/SB/63).

4. STATEMENT: The entire delay in filing the required reply from the due date for the required reply until the filing of a grantable petition under 37 CFR 1.137(b) was unintentional. [NOTE: The United States Patent and Trademark Office may require additional information if there is a question as to whether either the abandonment or the delay in filing a petition under 37 CFR 1.137(b) was unintentional (MPEP 711.03(c), subsections (III)(C) and (D)).]

WARNING:

Petitioner/applicant is cautioned to avoid submitting personal information in documents filed in a patent application that may contribute to identity theft. Personal information such as social security numbers, bank account numbers, or credit card numbers (other than a check or credit card authorization form PTO-2038 submitted for payment purposes) is never required by the USPTO to support a petition or an application. If this type of personal information is included in documents submitted to the USPTO, petitioners/applicants should consider redacting such personal information from the documents before submitting them to the USPTO. Petitioner/applicant is advised that the record of a patent application is available to the public after publication of the application (unless a non-publication request in compliance with 37 CFR 1.213(a) is made in the application) or issuance of a patent. Furthermore, the record from an abandoned application may also be available to the public if the application is referenced in a published application or an issued patent (see 37 CFR 1.14). Checks and credit card authorization forms PTO-2038 submitted for payment purposes are not retained in the application file and therefore are not publicly available.

Signature	Date
Typed or printed name	Registration Number, if applicable
Address	Telephone Number
Address	

Enclosures: ☐ Fee Payment

☐ Reply

☐ Terminal Disclaimer Form

☐ Additional sheets containing statements establishing unintentional delay

☐ Other: _____

CERTIFICATE OF MAILING OR TRANSMISSION [37 CFR 1.8(a)]

I hereby certify that this correspondence is being:

☐ Deposited with the United States Postal Service on the date shown below with sufficient postage as first class mail in an envelope addressed to: Mail Stop Petition, Commissioner for Patents, P. O. Box 1450, Alexandria, VA 22313-1450.

☐ Transmitted by facsimile on the date shown below to the United States Patent and Trademark Office at (571) 273-8300.

Date	Signature
	Typed or printed name of person signing certificate

Privacy Act Statement

The **Privacy Act of 1974 (P.L. 93-579)** requires that you be given certain information in connection with your submission of the attached form related to a patent application or patent. Accordingly, pursuant to the requirements of the Act, please be advised that: (1) the general authority for the collection of this information is 35 U.S.C. 2(b)(2); (2) furnishing of the information solicited is voluntary; and (3) the principal purpose for which the information is used by the U.S. Patent and Trademark Office is to process and/or examine your submission related to a patent application or patent. If you do not furnish the requested information, the U.S. Patent and Trademark Office may not be able to process and/or examine your submission, which may result in termination of proceedings or abandonment of the application or expiration of the patent.

The information provided by you in this form will be subject to the following routine uses:

1. The information on this form will be treated confidentially to the extent allowed under the Freedom of Information Act (5 U.S.C. 552) and the Privacy Act (5 U.S.C 552a). Records from this system of records may be disclosed to the Department of Justice to determine whether disclosure of these records is required by the Freedom of Information Act.
2. A record from this system of records may be disclosed, as a routine use, in the course of presenting evidence to a court, magistrate, or administrative tribunal, including disclosures to opposing counsel in the course of settlement negotiations.
3. A record in this system of records may be disclosed, as a routine use, to a Member of Congress submitting a request involving an individual, to whom the record pertains, when the individual has requested assistance from the Member with respect to the subject matter of the record.
4. A record in this system of records may be disclosed, as a routine use, to a contractor of the Agency having need for the information in order to perform a contract. Recipients of information shall be required to comply with the requirements of the Privacy Act of 1974, as amended, pursuant to 5 U.S.C. 552a(m).
5. A record related to an International Application filed under the Patent Cooperation Treaty in this system of records may be disclosed, as a routine use, to the International Bureau of the World Intellectual Property Organization, pursuant to the Patent Cooperation Treaty.
6. A record in this system of records may be disclosed, as a routine use, to another federal agency for purposes of National Security review (35 U.S.C. 181) and for review pursuant to the Atomic Energy Act (42 U.S.C. 218(c)).
7. A record from this system of records may be disclosed, as a routine use, to the Administrator, General Services, or his/her designee, during an inspection of records conducted by GSA as part of that agency's responsibility to recommend improvements in records management practices and programs, under authority of 44 U.S.C. 2904 and 2906. Such disclosure shall be made in accordance with the GSA regulations governing inspection of records for this purpose, and any other relevant (*i.e.*, GSA or Commerce) directive. Such disclosure shall not be used to make determinations about individuals.
8. A record from this system of records may be disclosed, as a routine use, to the public after either publication of the application pursuant to 35 U.S.C. 122(b) or issuance of a patent pursuant to 35 U.S.C. 151. Further, a record may be disclosed, subject to the limitations of 37 CFR 1.14, as a routine use, to the public if the record was filed in an application which became abandoned or in which the proceedings were terminated and which application is referenced by either a published application, an application open to public inspection or an issued patent.
9. A record from this system of records may be disclosed, as a routine use, to a Federal, State, or local law enforcement agency, if the USPTO becomes aware of a violation or potential violation of law or regulation.

UNITED STATES PATENT AND TRADEMARK OFFICE

UNITED STATES DEPARTMENT OF COMMERCE
United States Patent and Trademark Office
Address: COMMISSIONER FOR PATENTS
P.O. Box 1450
Alexandria, Virginia 22313-1450
www.uspto.gov

APPLICATION NUMBER	FILING OR 371 (c) DATE	FIRST NAMED APPLICANT	ATTORNEY DOCKET NUMBER
29/259,564	05/08/2006	Marion Seinkbeil	

Gail Ann Okray
913 Cornelius Drive
Green Bay, WI 54311

COPY

CONFIRMATION NO. 8248
FORMALITIES LETTER

Date Mailed: 06/05/2006

NOTICE TO FILE MISSING PARTS OF NONPROVISIONAL APPLICATION

FILED UNDER 37 CFR 1.53(b)

Filing Date Granted

Items Required To Avoid Abandonment:

An application number and filing date have been accorded to this application. The item(s) indicated below, however, are missing. Applicant is given TWO MONTHS from the date of this Notice within which to file all required items and pay any fees required below to avoid abandonment. Extensions of time may be obtained by filing a petition accompanied by the extension fee under the provisions of 37 CFR 1.136(a).

- To avoid abandonment, a surcharge (for late submission of filing fee, search fee, examination fee or oath or declaration) as set forth in 37 CFR 1.16(f) of $65 for a small entity in compliance with 37 CFR 1.27, must be submitted with the missing items identified in this letter.

SUMMARY OF FEES DUE:

Total additional fee(s) required for this application is **$130** for a Small Entity

- **$65** Surcharge.
- The application examination fee has not been paid. Applicant must submit **$65** to complete the examination fee for a small entity in compliance with 37 CFR 1.27

Replies should be mailed to: Mail Stop Missing Parts
Commissioner for Patents
P.O. Box 1450
Alexandria VA 22313-1450

A copy of this notice MUST be returned with the reply.

PTO/SB/63 (01-08)
Approved for use through 07/31/2008. OMB 0651-0031
U.S. Patent and Trademark Office; U.S. DEPARTMENT OF COMMERCE
Under the Paperwork Reduction Act of 1995, no persons are required to a collection of information unless it displays a valid OMB control number.

TERMINAL DISCLAIMER TO ACCOMPANY PETITION	Docket Number (Optional)

In re Application of:

Name:

Application Number:

Filed:

For:

The owner*, _____ of _____ percent interest in the above-identified application hereby disclaims a terminal part of the term of any patent granted the above-identified application equivalent to: (1) if the above-identified application is a design application, the period of abandonment of the above-identified application, and (2) if the above-identified application is a utility or plant application, the lesser of: (a) the period of abandonment of the application; or (b) the period extending beyond twenty years from the date on which the above-identified application was filed in the United States or, if the application contains a specific reference to an earlier filed application(s) under 35 U.S.C. 120, 121, or 365(c), from the date on which the earliest such application was filed. This disclaimer also applies to any patent granted on a utility or plant application filed before June 8, 1995, or a design application, that contains a specific reference under 35 U.S.C. 120, 121, or 365(c) to the above-identified application. This disclaimer is binding upon the grantee, and its successors or assigns.

Check either box 1 or 2 below, if appropriate.

1. ☐ For submissions on behalf of an organization (e.g., corporation, partnership, university, government agency, etc.), the undersigned is empowered to act on behalf of the organization.

2. ☐ The undersigned is an attorney or agent of record. Registration Number_____.

_____	_____
Signature	Date
_____	_____
Typed or Printed Name	Telephone Number

☐ Terminal disclaimer fee under 37 CFR 1.20(d) included.

WARNING: Information on this form may become public. Credit card information should not be included on this form. Provide credit card information and authorization on PTO-2038.

* Statement under 37 CFR 3.73(b) is required if terminal disclaimer is signed by the assignee (owner). Form PTO/SB/96 may be used for making this certification. See MPEP § 324.

This collection of information is required by 37 CFR 1.137. The information is required to obtain or retain a benefit by the public which is to file (and by the USPTO to process) an application. Confidentiality is governed by 35 U.S.C. 122 and 37 CFR 1.11 and 1.14. This collection is estimated to take 12 minutes to complete, including gathering, preparing, and submitting the completed application form to the USPTO. Time will vary depending upon the individual case. Any comments on the amount of time you require to complete this form and/or suggestions for reducing this burden, should be sent to the Chief Information Officer, U.S. Patent and Trademark Office, U.S. Department of Commerce, P.O. Box 1450, Alexandria, VA 22313-1450. DO NOT SEND FEES OR COMPLETED FORMS TO THIS ADDRESS. **SEND TO: Commissioner for Patents, P.O. Box 1450, Alexandria, VA 22313-1450.**

If you need assistance in completing the form, call 1-800-PTO-9199 and select option 2.

Privacy Act Statement

The **Privacy Act of 1974 (P.L. 93-579)** requires that you be given certain information in connection with your submission of the attached form related to a patent application or patent. Accordingly, pursuant to the requirements of the Act, please be advised that: (1) the general authority for the collection of this information is 35 U.S.C. 2(b)(2); (2) furnishing of the information solicited is voluntary; and (3) the principal purpose for which the information is used by the U.S. Patent and Trademark Office is to process and/or examine your submission related to a patent application or patent. If you do not furnish the requested information, the U.S. Patent and Trademark Office may not be able to process and/or examine your submission, which may result in termination of proceedings or abandonment of the application or expiration of the patent.

The information provided by you in this form will be subject to the following routine uses:

1. The information on this form will be treated confidentially to the extent allowed under the Freedom of Information Act (5 U.S.C. 552) and the Privacy Act (5 U.S.C 552a). Records from this system of records may be disclosed to the Department of Justice to determine whether disclosure of these records is required by the Freedom of Information Act.
2. A record from this system of records may be disclosed, as a routine use, in the course of presenting evidence to a court, magistrate, or administrative tribunal, including disclosures to opposing counsel in the course of settlement negotiations.
3. A record in this system of records may be disclosed, as a routine use, to a Member of Congress submitting a request involving an individual, to whom the record pertains, when the individual has requested assistance from the Member with respect to the subject matter of the record.
4. A record in this system of records may be disclosed, as a routine use, to a contractor of the Agency having need for the information in order to perform a contract. Recipients of information shall be required to comply with the requirements of the Privacy Act of 1974, as amended, pursuant to 5 U.S.C. 552a(m).
5. A record related to an International Application filed under the Patent Cooperation Treaty in this system of records may be disclosed, as a routine use, to the International Bureau of the World Intellectual Property Organization, pursuant to the Patent Cooperation Treaty.
6. A record in this system of records may be disclosed, as a routine use, to another federal agency for purposes of National Security review (35 U.S.C. 181) and for review pursuant to the Atomic Energy Act (42 U.S.C. 218(c)).
7. A record from this system of records may be disclosed, as a routine use, to the Administrator, General Services, or his/her designee, during an inspection of records conducted by GSA as part of that agency's responsibility to recommend improvements in records management practices and programs, under authority of 44 U.S.C. 2904 and 2906. Such disclosure shall be made in accordance with the GSA regulations governing inspection of records for this purpose, and any other relevant (*i.e.*, GSA or Commerce) directive. Such disclosure shall not be used to make determinations about individuals.
8. A record from this system of records may be disclosed, as a routine use, to the public after either publication of the application pursuant to 35 U.S.C. 122(b) or issuance of a patent pursuant to 35 U.S.C. 151. Further, a record may be disclosed, subject to the limitations of 37 CFR 1.14, as a routine use, to the public if the record was filed in an application which became abandoned or in which the proceedings were terminated and which application is referenced by either a published application, an application open to public inspection or an issued patent.
9. A record from this system of records may be disclosed, as a routine use, to a Federal, State, or local law enforcement agency, if the USPTO becomes aware of a violation or potential violation of law or regulation.

UNITED STATES PATENT AND TRADEMARK OFFICE

Commissioner for Patents
United States Patent and Trademark Office
P.O. Box 1450
Alexandria, VA 22313-1450
www.uspto.gov

Gail Ann Okray
913 Cornelius Drive
Green Bay WI 54311

COPY MAILED

OCT 1 0 2008

OFFICE OF PETITIONS

In re Application of
Seinkbeil et al.
Application No.: 29/259,564
Filed: May 8, 2006
Attorney Docket No:

ON PETITION

This is in response to the petition under 37 CFR 1.137(b) filed August 27, 2008.

The petition is **dismissed.**

Any request for reconsideration of this decision must be submitted within TWO (2) MONTHS from the mail date of this decision. Extensions of time under 37 CFR 1.136(a) are permitted. The reconsideration request should include a cover letter entitled "Renewed Petition" under 37 CFR 1.137(b)."

The application became abandoned on August 6, 2006, after no response was received to the Notice to File Missing Parts of Non-provisional Application mailed June 5, 2006, which set a shortened period for reply of two-months from its mailing date. No response was received within the allowable period, and the application became abandoned on August 6, 2006. A Notice of Abandonment was mailed May 13, 2008.

Effective December 1, 1997, the provisions of 37 CFR 1.137(b) now provide that where the delay in reply was unintentional, a petition may be filed to revive an abandoned application or a lapsed patent pursuant to 37 CFR 1.137(b). A grantable petition pursuant to 37 CFR 1.137(b) must be accompanied by:

(1) the required reply, unless previously filed. In a non-provisional application abandoned for failure to prosecute, the required reply may be met by the filing of a continuing application. In an application or patent, abandoned or lapsed for failure to pay the issue fee, or any portion thereof, the required reply must be the payment of the issue fee or any outstanding balance thereof.

(2) the petition fee as set forth in 37 CFR 1.17(m);

(3) a statement that the entire delay in filing the required reply from the due date for the reply until the filing of a grantable petition pursuant to 37 CFR 1.137(b) was unintentional. The Commissioner may require additional information where there is a question whether the delay was unintentional; and

(4) any terminal disclaimer (and fee set forth in 37 CFR 1.20(d)) required pursuant to 37 CFR 1.137(c).

The instant petition does not satisfy the requirements of item (4) above.

As to item (4), the fee for the terminal disclaimer in the amount of $65.00 did not accompany the petition. The Notice to File Missing Parts of Non-Provisional Application required that the examination fee of $65.00 and surcharge of $65.00 be paid. These amounts are of record in the application. Additional a filing fee of $100.00 and search fee of $50.00 are also of record. There are no additional funds to be used for the terminal disclaimer fee as was once thought and communicated to Ms. Okray. The undersigned overlooked the need to pay the $65.00 surcharge as required by the Notice to File Missing Parts of Non-Provisional Application and sincerely apologizes for the inconvenience to the petitioner. The petition must be dismissed because the terminal disclaimer fee is not of record. The renewed petition must be accompanied by the fee for the terminal disclaimer which is $70.00, effective October 2, 2008. There is no fee for the renewed petition. As a courtesy, Form PTO/SB/64 is enclosed.

Further correspondence with respect to this matter should be addressed as follows:

By mail:

Mail Stop Petitions
Commissioner for Patents
United States Patent and Trademark Office
Box 1450
Alexandria, VA 22313-1450

By facsimile: (571) 273-8300
Attn: Office of Petitions

Telephone inquiries concerning this decision may be directed to the undersigned at (571) 272-3222.

Kenya A. McLaughlin
Petitions Attorney
Office of Petitions

PTO/SB/64 (09-08)
Approved for use through 10/31/2008. OMB 0651-0031
U.S. Patent and Trademark Office; U.S. DEPARTMENT OF COMMERCE
Under the Paperwork Reduction Act of 1995, no persons are required to respond to a collection of information unless it displays a valid OMB control number.

PETITION FOR REVIVAL OF AN APPLICATION FOR PATENT ABANDONED UNINTENTIONALLY UNDER 37 CFR 1.137(b)

Docket Number (Optional)

First named inventor:

Application No.: Art Unit:

Filed: Examiner:

Title:

Attention: Office of Petitions
Mail Stop Petition
Commissioner for Patents
P.O. Box 1450
Alexandria, VA 22313-1450
FAX (571) 273-8300

NOTE: If information or assistance is needed in completing this form, please contact Petitions Information at (571) 272-3282.

The above-identified application became abandoned for failure to file a timely and proper reply to a notice or action by the United States Patent and Trademark Office. The date of abandonment is the day after the expiration date of the period set for reply in the office notice or action plus an extensions of time actually obtained.

APPLICANT HEREBY PETITIONS FOR REVIVAL OF THIS APPLICATION

NOTE: A grantable petition requires the following items:
(1) Petition fee;
(2) Reply and/or issue fee;
(3) Terminal disclaimer with disclaimer fee - required for all utility and plant applications filed before June 8, 1995; and for all design applications; and
(4) Statement that the entire delay was unintentional.

1. Petition fee

☐ Small entity-fee $ _____ (37 CFR 1.17(m)). Applicant claims small entity status. See 37 CFR 1.27.

☐ Other than small entity – fee $ _____ (37 CFR 1.17(m))

2. Reply and/or fee

A. The reply and/or fee to the above-noted Office action in the form of _____(identify type of reply):

☐ has been filed previously on _____.
☐ is enclosed herewith.

B. The issue fee and publication fee (if applicable) of $ _____.

☐ has been paid previously on _____.
☐ is enclosed herewith.

This collection of information is required by 37 CFR 1.137(b). The information is required to obtain or retain a benefit by the public which is to file (and by the USPTO to process) an application. Confidentiality is governed by 35 U.S.C. 122 and 37 CFR 1.11 and 1.14. This collection is estimated to take 1.0 hour to complete, including gathering, preparing, and submitting the completed application form to the USPTO. Time will vary depending upon the individual case. Any comments on the amount of time you require to complete this form and/or suggestions for reducing this burden, should be sent to the Chief Information Officer, U.S. Patent and Trademark Office, U.S. Department of Commerce, P.O. Box 1450, Alexandria, VA 22313-1450. DO NOT SEND FEES OR COMPLETED FORMS TO THIS ADDRESS. **SEND TO: Mail Stop Petition, Commissioner for Patents, P.O. Box 1450, Alexandria, VA 22313-1450.**

If you need assistance in completing the form, call 1-800-PTO-9199 and select option 2.

Under the Paperwork Reduction Act of 1995, no persons are required to respond to a collection of information unless it displays a valid OMB control number.

3. Terminal disclaimer with disclaimer fee

☐ Since this utility/plant application was filed on or after June 8, 1995, no terminal disclaimer is required.

☐ A terminal disclaimer (and disclaimer fee (37 CFR 1.20(d)) of $ _____ for a small entity or $ _____ for other than a small entity) disclaiming the required period of time is enclosed herewith (see PTO/SB/63).

4. STATEMENT: The entire delay in filing the required reply from the due date for the required reply until the filing of a grantable petition under 37 CFR 1.137(b) was unintentional. [NOTE: The United States Patent and Trademark Office may require additional information if there is a question as to whether either the abandonment or the delay in filing a petition under 37 CFR 1.137(b) was unintentional (MPEP 711.03(c), subsections (III)(C) and (D)).]

WARNING:

Petitioner/applicant is cautioned to avoid submitting personal information in documents filed in a patent application that may contribute to identity theft. Personal information such as social security numbers, bank account numbers, or credit card numbers (other than a check or credit card authorization form PTO-2038 submitted for payment purposes) is never required by the USPTO to support a petition or an application. If this type of personal information is included in documents submitted to the USPTO, petitioners/applicants should consider redacting such personal information from the documents before submitting them to the USPTO. Petitioner/applicant is advised that the record of a patent application is available to the public after publication of the application (unless a non-publication request in compliance with 37 CFR 1.213(a) is made in the application) or issuance of a patent. Furthermore, the record from an abandoned application may also be available to the public if the application is referenced in a published application or an issued patent (see 37 CFR 1.14). Checks and credit card authorization forms PTO-2038 submitted for payment purposes are not retained in the application file and therefore are not publicly available.

Signature	Date
Typed or printed name	Registration Number, if applicable
Address	Telephone Number
Address	

Enclosures: ☐ Fee Payment

☐ Reply

☐ Terminal Disclaimer Form

☐ Additional sheets containing statements establishing unintentional delay

☐ Other: _____

CERTIFICATE OF MAILING OR TRANSMISSION [37 CFR 1.8(a)]

I hereby certify that this correspondence is being:

☐ Deposited with the United States Postal Service on the date shown below with sufficient postage as first class mail in an envelope addressed to: Mail Stop Petition, Commissioner for Patents, P. O. Box 1450, Alexandria, VA 22313-1450.

☐ Transmitted by facsimile on the date shown below to the United States Patent and Trademark Office at (571) 273-8300.

Date	Signature
	Typed or printed name of person signing certificate

Privacy Act Statement

The **Privacy Act of 1974 (P.L. 93-579)** requires that you be given certain information in connection with your submission of the attached form related to a patent application or patent. Accordingly, pursuant to the requirements of the Act, please be advised that: (1) the general authority for the collection of this information is 35 U.S.C. 2(b)(2); (2) furnishing of the information solicited is voluntary; and (3) the principal purpose for which the information is used by the U.S. Patent and Trademark Office is to process and/or examine your submission related to a patent application or patent. If you do not furnish the requested information, the U.S. Patent and Trademark Office may not be able to process and/or examine your submission, which may result in termination of proceedings or abandonment of the application or expiration of the patent.

The information provided by you in this form will be subject to the following routine uses:

1. The information on this form will be treated confidentially to the extent allowed under the Freedom of Information Act (5 U.S.C. 552) and the Privacy Act (5 U.S.C 552a). Records from this system of records may be disclosed to the Department of Justice to determine whether disclosure of these records is required by the Freedom of Information Act.
2. A record from this system of records may be disclosed, as a routine use, in the course of presenting evidence to a court, magistrate, or administrative tribunal, including disclosures to opposing counsel in the course of settlement negotiations.
3. A record in this system of records may be disclosed, as a routine use, to a Member of Congress submitting a request involving an individual, to whom the record pertains, when the individual has requested assistance from the Member with respect to the subject matter of the record.
4. A record in this system of records may be disclosed, as a routine use, to a contractor of the Agency having need for the information in order to perform a contract. Recipients of information shall be required to comply with the requirements of the Privacy Act of 1974, as amended, pursuant to 5 U.S.C. 552a(m).
5. A record related to an International Application filed under the Patent Cooperation Treaty in this system of records may be disclosed, as a routine use, to the International Bureau of the World Intellectual Property Organization, pursuant to the Patent Cooperation Treaty.
6. A record in this system of records may be disclosed, as a routine use, to another federal agency for purposes of National Security review (35 U.S.C. 181) and for review pursuant to the Atomic Energy Act (42 U.S.C. 218(c)).
7. A record from this system of records may be disclosed, as a routine use, to the Administrator, General Services, or his/her designee, during an inspection of records conducted by GSA as part of that agency's responsibility to recommend improvements in records management practices and programs, under authority of 44 U.S.C. 2904 and 2906. Such disclosure shall be made in accordance with the GSA regulations governing inspection of records for this purpose, and any other relevant (*i.e.*, GSA or Commerce) directive. Such disclosure shall not be used to make determinations about individuals.
8. A record from this system of records may be disclosed, as a routine use, to the public after either publication of the application pursuant to 35 U.S.C. 122(b) or issuance of a patent pursuant to 35 U.S.C. 151. Further, a record may be disclosed, subject to the limitations of 37 CFR 1.14, as a routine use, to the public if the record was filed in an application which became abandoned or in which the proceedings were terminated and which application is referenced by either a published application, an application open to public inspection or an issued patent.
9. A record from this system of records may be disclosed, as a routine use, to a Federal, State, or local law enforcement agency, if the USPTO becomes aware of a violation or potential violation of law or regulation.

UNITED STATES PATENT AND TRADEMARK OFFICE

Commissioner for Patents
United States Patent and Trademark Office
P.O. Box 1450
Alexandria, VA 22313-1450
www.uspto.gov

COPY MAILED

NOV 17 2008

OFFICE OF PETITIONS

Gail Ann Okray
913 Cornelius Drive
Green Bay WI 54311

In re Application of	:	
Seinkbeil, et al.	:	
Application No.: 29/259,564	:	ON PETITION
Filed: May 8, 2006	:	
Attorney Docket No.	:	

This is in response to the renewed petition under 37 CFR 1.137(b) filed October 28, 2008.

The renewed petition under 37 CFR 1.137(b) is **granted**.

A "Notice to File Missing Parts of Nonprovisional Application" (the "Notice") was mailed by the Office on June 5, 2006, allowing a shortened period of reply of two-months from its mailing date. Extensions of time set for reply were available pursuant to 37 CFR 1.136(a). No response was received within the allowable period and the application became abandoned on August 6, 2006. A Notice of Abandonment was mailed on May 13, 2008.

The terminal disclaimer filed August 27 2008, is noted and made of record.

This application is being directed to the Office of Patent Application Processing for further processing.

Telephone inquiries regarding this decision should be directed to the undersigned at (571) 272-3222.

Kenya A. McLaughlin
Petitions Attorney
Office of Petitions

UNITED STATES PATENT AND TRADEMARK OFFICE

Commissioner for Patents
United States Patent and Trademark Office
P.O. Box 1450
Alexandria, VA 22313-1450
www.uspto.gov

KLARQUIST SPARKMAN, LLP
121 SW SALMON STREET
SUITE 1600
PORTLAND OR 97204

COPY MAILED

SEP 1 4 2007

OFFICE OF PETITIONS

ON PETITION

In re Application of :
Christopher G. Forthaus et al :
Application No. 29/259,566 :
Filed: May 10, 2006 :
Attorney Docket No. 7207-66771-03 :

This is a decision on the petition, filed September 13, 2007, under 37 CFR 1.313(c)(3) to withdraw the above-identified application from issue after payment of the issue fee.

The petition is **GRANTED**.

The above-identified application is withdrawn from issue in favor of a continued prosecution application (CPA) under 37 CFR 1.53(d).

Petitioner is advised that the issue fee paid on March 27, 2007 in the parent application is not refundable nor can it be applied towards any new Notice of Allowance which may issue on the CPA filed September 13, 2007.

Telephone inquiries should be directed to the undersigned at (571) 272-3208.

This matter is being referred to Technology Center AU 2912 for processing of the CPA.

Karen Creasy

Karen Creasy
Petitions Examiner
Office of Petitions

SPE RESPONSE FOR CERTIFICATE OF CORRECTION

Paper No.: _____

DATE : 07/13/09

TO SPE OF : ART UNIT 2912

SUBJECT : Request for Certificate of Correction for Appl. No.: 29259566 Patent No.: D558573 S

Please respond to this request for a certificate of correction within 7 days.

FOR IFW FILES:

Please review the requested changes/corrections as shown in the **COCIN** document(s) in the IFW application image. No new matter should be introduced, nor should the scope or meaning of the claims be changed.

Please complete the response (see below) and forward the completed response to scanning using document code **COCX**.

FOR PAPER FILES:

Please review the requested changes/corrections as shown in the attached certificate of correction. Please complete this form (see below) and forward it with the file to:

Certificates of Correction Branch (C of C)
Randolph Square 9C62-D
Palm Location 7580

You can fax the Directors/SPE response to 571-270-9990

Lamonte Newsome
Certificates of Correction Branch
703-756-1574

Thank You For Your Assistance

The request for issuing the above-identified correction(s) is hereby:
Note your decision on the appropriate box.

- ☒ **Approved** — All changes apply.
- ☐ **Approved in Part** — Specify below which changes **do not** apply.
- ☐ **Denied** — State the reasons for denial below.

Comments: _____

IAN SIMMONS
SUPERVISORY PATENT EXAMINER

2916

UNITED STATES PATENT AND TRADEMARK OFFICE

Commissioner for Patents
United States Patent and Trademark Office
P.O. Box 1450
Alexandria, VA 22313-1450
www.uspto.gov

MAURICE M. KLEE
1951 BURR STREET
FAIRFIELD, CT 06824

COPY MAILED
NOV 19 2008

In re Application of	:	
George C. Greenwood	:	
Application No. 29/259,576	:	ON PETITION
Filed: May 11, 2006	:	
Attorney Docket No. 101AC-052A	:	

This is a decision on the petition under 37 CFR 1.137(b), filed on September 15, 2008, to revive the above-identified application.

The application became abandoned for failure to timely respond to the Notice of Allowability for a Design Application mailed June 11, 2007. A Notice of Abandonment was mailed on July 25, 2008.

It is not apparent whether the statement of unintentional delay was signed by a person who would have been in a position of knowing that the entire delay in filing the required reply from the due date for the reply until the filing of a grantable petition pursuant to 37 CFR 1.137(b) was unintentional. Nevertheless, in accordance with 37 CFR 10.18, the statement is accepted as constituting a certification of unintentional delay. However, in the event that petitioner has no knowledge that the delay was unintentional, petitioner must make such an inquiry to ascertain that, in fact, the delay was unintentional. If petitioner discovers that the delay was intentional, petitioner must so notify the Office.

The petition satisfies the requirements of 37 CFR 1.137(b) in that petitioner has supplied (1) the reply in the form of a substitute Oath/Declaration and a Terminal Disclaimer with the $130 fee; (2) the petition fee of $1,540; and (3) a proper statement of unintentional delay. Therefore, the petition is **GRANTED**.

The Terminal Disclaimer under 37 CFR 1.137(d), filed September 15, 2008, has been accepted and made of record. Any continuing application filed from this application must contain a copy of the terminal disclaimer. The copy of the terminal disclaimer must be filed with a cover letter requesting the terminal disclaimer be recorded on the continuing application. A copy of this decision should be attached to the cover letter.

The Power of Attorney or Revocation of Power of Attorney with a New Power of Attorney and Change of Correspondence Address filed on September 15, 2008 has been accepted and made of record.

This application file is being referred to the Office of Data Management to be processed into a patent.

Telephone inquiries concerning this decision should be directed to the undersigned at (571) 272-3226.

Andrea Smith
Petitions Examiner
Office of Petitions

UNITED STATES PATENT AND TRADEMARK OFFICE

Commissioner for Patents
United States Patent and Trademark Office
P.O. Box 1450
Alexandria, VA 22313-1450
www.uspto.gov

COPY MAILED
OCT 26 2006
OFFICE OF PETITIONS

Charles W. Hanor, P.C.
P.O. Box 91319
San Antonio TX 78209

In re Application of :
Myrna Rae Hoehne :
Application No. 29/259,637 : DECISION ON PETITION
Filed: May 11, 2006 :
Attorney Docket No. 8184.008A :

This is a decision on the petition filed on Monday, August 7, 2006, requesting that the application be accorded a filing date of May 11, 2006, with Figure 14 as part of the original disclosure.

On May 11, 2006, applicant filed the above-identified application. On June 5, 2006, the Office of Initial Patent Examination mailed a Notice of Omitted Item(s) in a Nonprovisional Application, stating that the application had been accorded a filing date of May 11, 2006, and advising applicant that Figure 14 appeared to have been omitted.

In response, on Monday, August 7, 2006, applicant submitted the present petition, one drawing sheet of Figure 14, and the petition fee. Additionally, applicant submitted a copy of applicant's returned, date-stamped postcard receipt acknowledging receipt of 6 sheets of drawings in the USPTO on May 11, 2006.

Upon review of the record, Figure 14, deposited on May 11, 2006, has not been located among the application papers. However, the evidence is convincing that the application papers deposited on May 11, 2006, included Figure 14, which was subsequently misplaced in the USPTO. Therefore, the application, including Figure 14, was complete on filing and will be granted a filing date of May 11, 2006.

Accordingly, the petition is granted.

The Notice of Omitted Item(s) was sent in error and is hereby withdrawn. Accordingly, no petition fee is necessary. The $400.00 petition fee will be refunded by treasury check in due course.

The Office of Initial Patent Examination is directed **to accord the above-identified application a filing date of May 11, 2006,** using the five sheets of drawings submitted on that date, and Figure 14 submitted with the petition on August 7, 2006, as part of the original disclosure.

Any inquiries related to this decision should be directed to the undersigned at (571) 272-3211.

C. T. Donnell

Christina Tartera Donnell
Senior Petitions Attorney
Office of Petitions

UNITED STATES PATENT AND TRADEMARK OFFICE

Commissioner for Patents
United States Patent and Trademark Office
P.O. Box 1450
Alexandria, VA 22313-1450
www.uspto.gov

NIXON PEABODY, LLP
161 N. CLARK ST.
48TH FLOOR
CHICAGO IL 60601-3213

COPY MAILED

MAR 2 6 2008

OFFICE OF PETITIONS

In re Application of :
ROTHSCHILD, WAYNE H. :
Application No. 29/259,667 :
Filed: 05/12/2006 :
Attorney Docket No. 266727-000008USPD :

DECISION ON PETITION

This is a decision on the petition under the unintentional provisions of 37 CFR 1.137(b), filed December 17, 2007, to revive the above-identified application.

The petition is **GRANTED**.

This application became abandoned for failure to timely pay the issue fee and to submit corrected drawings on or before September 29, 2007, as required by the Notice of Allowance and Fee(s) Due and the Notice of Allowability, mailed June 29, 2007. Accordingly, this application became abandoned on September 30, 2007.

The petition satisfies the requirements of 37 CFR 1.137(b) in that petitioner has supplied (1) the reply in the form of payment of the issue fee and corrected formal drawings, (2) the petition fee, (3) a proper statement of unintentional delay, and (4) a terminal disclaimer (and fee).

The terminal disclaimer submitted on December 17, 2007, is accepted.

This matter is being forwarded to the Office of Patent Publication for processing into a patent.

Telephone inquiries concerning the issuance of the application into a patent should be directed to the Office of Patent Publication, Customer Service at (571) 272-4200.

Telephone inquiries specifically concerning this decision should be directed to the undersigned at (571) 272-3211.

Christina Tartera Donnell

Christina Tartera Donnell
Senior Petitions Attorney
Office of Petitions

UNITED STATES PATENT AND TRADEMARK OFFICE

Commissioner for Patents
United States Patent and Trademark Office
P.O. Box 1450
Alexandria, VA 22313-1450
www.uspto.gov

NIXON PEABODY, LLP
161 N. CLARK ST.
48TH FLOOR
CHICAGO, IL 60601-3213

COPY MAILED

JUL 03 2008

OFFICE OF PETITIONS

In re Application of	:
Wayne H. Rothschild	: DECISION GRANTING PETITION
Application No. 29/259,667	: UNDER 37 CFR 1.313(c)(3) (CPA)
Filed: May 12, 2006	:
Attorney Docket No. 266727-000008USPD	:

This is a decision on the petition under 37 CFR 1.313(c)(3), filed July 2, 2008, to withdraw the above-identified application from issue after payment of the issue fee.

The petition is **GRANTED**.

The above-identified application is hereby withdrawn from issue in favor of a continued prosecution application (CPA) under 37 CFR 1.53(d).

Petitioner is advised that the issue fee paid on December 17, 2007 in the parent application is not refundable nor can it be applied towards any new Notice of Allowance which may issue on the CPA filed July 2, 2008.

Telephone inquiries should be directed to Irvin Dingle at (571) 272-3210.

This matter is being referred to Technology Center AU 2915 for processing of the CPA and consideration of the concurrently filed Information Disclosure Statement.

Irvin Dingle
Petitions Examiner
Office of Petitions

UNITED STATES PATENT AND TRADEMARK OFFICE

COMMISSIONER FOR PATENTS
UNITED STATES PATENT AND TRADEMARK OFFICE
P.O. BOX 1450
ALEXANDRIA, VA 22313-1450
www.uspto.gov

WHITE & CASE LLP
PATENT DEPARTMENT
1155 AVENUE OF THE AMERICAS
NEW YORK NY 10036

COPY MAILED

JUL 27 2006

OFFICE OF PETITIONS

ON PETITION

In re Application of :
Benktzon, et al. :
Application No. 29/259,702 :
Filed: May 15, 2006 :
Attorney Docket No. 1103326-0908 :
For: BLISTER PACK DEVICE

This is a decision on the petition filed June 30, 2006 (certificate of mailing date June 26, 2006) under 37 CFR 1.10(d), requesting that the above-identified application be accorded a filing date of May 12, 2006, rather than the presently accorded filing date of May 15, 2006.

The petition under 37 CFR 1.10(d) is **GRANTED**.

Petitioners request the earlier filing date on the basis that the application was deposited in Express Mail service on May 12, 2006, pursuant to the requirements of 37 CFR 1.10. The petition is accompanied by a copy of Express Mail label receipt no. EV500402881US that contains a postal stamp that shows the package was accepted by the USPS on MAY 12 2006. The same Express Mail label number is found on the Design Patent Application Transmittal found in the application file. It is noted the "date-in" field on the Express Mail label in question lists 5/15/06. Petitioners have provided a printout of the United States Postal Service Track/Confirm for the package associated with Express Mail label EV500402881US that shows the package was accepted by the USPS on May 12, 2006.

Paragraph (d) of 37 CFR 1.10 states that:

Any person filing correspondence under this section that was received by the Office and delivered by the "Express Mail Post Office to Addressee" service of the USPS, who can show that the "date-in" on the "Express Mail" mailing label or other official notation entered by the USPS was incorrectly entered or omitted by the USPS, may petition the Director to accord the correspondence a filing date as of the date the correspondence is shown to have been deposited with the USPS, provided that:

(1) The petition is filed promptly after the person becomes aware that the Office has accorded, or will accord, a filing date based upon an incorrect entry by the USPS;

(2) The number of the "Express Mail" mailing label was placed on the paper(s) or fee(s) that constitute the correspondence prior to the original mailing by "Express Mail"; and

(3) The petition includes a showing, which establishes to the satisfaction of the Director, that the requested filing date was the date the correspondence was deposited in "Express Mail Post Office to Addressee" service prior to the last scheduled pickup for that day. Any showing pursuant to this paragraph must be corroborated by evidence from the USPS or that came into being after deposit and within one business day of the deposit of the correspondence in the "Express Mail Post Office to Addressee" service of the USPS.

A grantable petition under 37 CFR 1.10(d) must include "a showing, which establishes to the satisfaction of the Director, that the requested filing date was the date the correspondence was deposited in "Express Mail Post Office to Addressee" service prior to the last scheduled pick-up for that day." In addition, the showing "must be corroborated by evidence from the USPS or that came into being after deposit and within one business day of the deposit of the correspondence in the 'Express Mail Post Office to Addressee' service of the USPS."

The petition is accompanied by the corroborating evidence required by the rule. Accordingly, the petition is granted. No petition fee has been or will be charged in connection with this matter.

The application is being returned to the Office of Initial Patent Examination for correction of the filing date to **May 12, 2006** and the mailing of a corrected filing receipt.

Any inquiries related to this decision should be directed to the undersigned at (571) 272-3230.

Shirene Willis Brantley

Shirene Willis Brantley
Senior Petitions Attorney
Office of Petitions

SPE RESPONSE FOR CERTIFICATE OF CORRECTION

Paper No.: _____

DATE : February 5, 2009

TO SPE OF : ART UNIT 2915 Robert M. Spear

SUBJECT : Request for Certificate of Correction for Appl. No.: 29/259,702 Patent No.: D570,171 S

Please respond to this request for a certificate of correction within 7 days.

FOR IFW FILES:

Please review the requested changes/corrections as shown in the **COCIN** document(s) in the IFW application image. No new matter should be introduced, nor should the scope or meaning of the claims be changed.

Please complete the response (see below) and forward the completed response to scanning using document code **COCX**.

FOR PAPER FILES:

Please review the requested changes/corrections as shown in the attached certificate of correction. Please complete this form (see below) and forward it with the file to:

Certificates of Correction Branch (CofC)
South Tower - 9A22
Palm Location 7580

~~SHOULD~~ PLEASE SEE COCIN dated 1-23-2009 applicant is requesting to delete 11 of the first embodiment in the figure descriptions 7 and 8. SHOULD THIS CHANGE BE APPROVED?

Antonio Johnson
Certificates of Correction Branch
703-308-9390 ext. 111

Thank You For Your Assistance

The request for issuing the above-identified correction(s) is hereby:
Note your decision on the appropriate box.

- ☒ **Approved** — All changes apply.
- ☐ **Approved in Part** — Specify below which changes **do not** apply.
- ☐ **Denied** — State the reasons for denial below.

Comments: _____

SPE

2915
Art Unit

PTOL-306 (REV. 7/03)

U.S. DEPARTMENT OF COMMERCE Patent and Trademark Office

PTO/SB/44 (09-07)
Approved for use through 08/31/2010. OMB 0651-0033
U.S. Patent and Trademark Office; U.S. DEPARTMENT OF COMMERCE
Under the Paperwork Reduction Act of 1995, no persons are required to respond to a collection of information unless it displays a valid OMB control number.
(Also Form PTO-1050)

UNITED STATES PATENT AND TRADEMARK OFFICE
CERTIFICATE OF CORRECTION

PATENT NO. : D570,171 S

APPLICATION NO.: 29/259,702

ISSUE DATE: : June 3, 2008

INVENTOR(S) : Maria Benktzon et al.

It is certified that an error appears or errors appear in the above-identified patent and that said Letters Patent is hereby corrected as shown below:

Delete Title page illustrating a figure(s), and substitute therefore, new Title page illustrating a figure(s) and correction to Description.

Delete drawing sheet 4 and substitute therefor drawing sheet 4 (attached).

MAILING ADDRESS OF SENDER (Please do not use customer number below):
Andrew Fessak, White & Case LLP
1155 Avenue of the Americas
New York, New York 10036

This collection of information is required by 37 CFR 1.322, 1.323, and 1.324. The information is required to obtain or retain a benefit by the public which is to file (and by the USPTO to process) an application. Confidentiality is governed by 35 U.S.C. 122 and 37 CFR 1.14. This collection is estimated to take 1.0 hour to complete, including gathering, preparing, and submitting the completed application form to the USPTO. Time will vary depending upon the individual case. Any comments on the amount of time you require to complete this form and/or suggestions for reducing this burden, should be sent to the Chief Information Officer, U.S. Patent and Trademark Office, U.S. Department of Commerce, P.O. Box 1450, Alexandria, VA 22313-1450. DO NOT SEND FEES OR COMPLETED FORMS TO THIS ADDRESS. **SEND TO: Attention Certificate of Corrections Branch, Commissioner for Patents, P.O. Box 1450, Alexandria, VA 22313-1450.**

If you need assistance in completing the form, call 1-800-PTO-9199 and select option 2.

American LegalNet, Inc.
www.Forms*Workflow*.com

(12) **United States Design Patent** (10) **Patent No.: US D570,171 S**
Benktzon et al. (45) **Date of Patent: ** Jun. 3, 2008**

(54) **BLISTER PACK DEVICE**

(75) Inventors: **Maria Benktzon**, Bromma (SE); **Andere Löfgren**, Södertälje (SE); **Sofia Jacobsson**, Bromma (SE); **Thomas Nilsson**, Bromma (SE); **Ulrika Vejbrink**, Bromma (SE)

(73) Assignee: **AstraZeneca AB**, Södertälje (SE)

(**) Term: **14 Years**

(21) Appl. No.: **29/259,702**

(22) Filed: **May 12, 2006**

(30) **Foreign Application Priority Data**

Nov. 15, 2005 (EM) 000431770-0001/0002

(51) **LOC (8) Cl.** 08-05

(52) **U.S. Cl.** D8/51; D8/98; D24/133

(58) **Field of Classification Search** D8/14, D8/51, 52, 98, 395; D24/133; 30/363, 364; 221/25, 26, 131; D9/435

See application file for complete search history.

(56) **References Cited**

U.S. PATENT DOCUMENTS

D317,571	S	6/1991	Henriksson	D9/443
5,431,283	A	7/1995	Weinstein et al.	206/531
5,472,115	A	12/1995	Whitos	221/25
D367,744	S	3/1996	White	D32/61
D391,851	S	3/1998	Joergensen	D9/434
5,722,563	A	3/1998	Hunts	221/25
5,853,101	A	12/1998	Weinstein	220/284
6,206,233	B1	3/2001	Schulze	221/25
D444,361	S	7/2001	Schulze	D8/51
6,557,740	B1	5/2003	Dent	225/104
D482,968	S	12/2003	Henriksson	D9/435
D517,884	S	3/2006	Ellingwood	D8/51
D533,661	S	12/2006	Yip	D24/133

Primary Examiner—Philip S. Hyder
(74) *Attorney, Agent, or Firm*—White & Case LLP

(57) **CLAIM**

The ornamental design for a blister pack device, as shown and described.

DESCRIPTION

FIG. 1 illustrates a perspective view of a blister pack device, embodying our design, in an open position;

FIG. 2 illustrates a side view thereof;

FIG. 3 illustrates a top view thereof;

FIG. 4 illustrates a bottom view thereof;

FIG. 5 illustrates a front view thereof;

FIG. 6 illustrates a rear view thereof; delete

FIG. 7 illustrates a perspective view of the first embodiment of a blister pack device, embodying our design, in a closed position; and,

FIG. 8 illustrates a side view of the first embodiment of a blister pack device, embodying our design, in an open position as seen from the opposite side of FIG. 2.

1 Claim, 5 Drawing Sheets

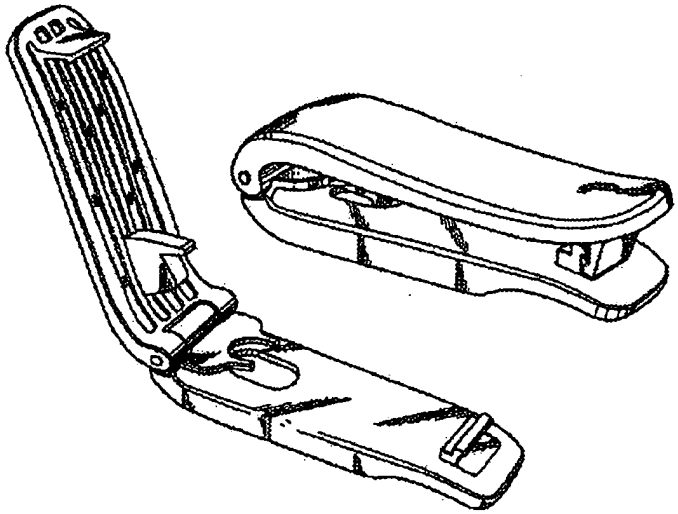

UNITED STATES PATENT AND TRADEMARK OFFICE

Commissioner for Patents
United States Patent and Trademark Office
P.O. Box 1450
Alexandria, VA 22313-1450
www.uspto.gov

COPY MAILED
NOV 14 2006
OFFICE OF PETITIONS

FITCH EVEN TABIN AND FLANNERY
120 SOUTH LA SALLE STREET
SUITE 1600
CHICAGO IL 60603-3406

In re Application of	:	
Tomohiro Horinouchi	:	
Application No. 29/259,729	:	DECISION GRANTING PETITION
Filed: May 15, 2006	:	
Attorney Docket No. 8304/87888	:	

This is a decision on the "RESPONSE TO NOTICE TO FILE MISSING PARTS AND ACCOMPANYING PETITION REGARDING FILED DRAWINGS", filed September 11, 2006, to accord the above-identified application a filing date of May 15, 2006, with Figure 7 of the drawings as part of the original disclosure.

The petition is **GRANTED**.

Application papers in the above-identified application were filed on May 15, 2006. However, on June 7, 2006, the Initial Patent Examination Division mailed applicants a "Notice to File Missing Parts of Nonprovisional Application." Applicants were instructed to submit an executed oath or declaration. In addition, applicants were notified the application papers had been accorded a filing date of May 15, 2006; however, Figure 7 of the drawings appeared to have been omitted.

In response, applicant filed the present petition. Applicant has submitted an executed declaration, together with a postcard receipt identifying the application, itemizing "Formal Drawings (4 pages)" as enclosed, and bearing a USPTO date stamp of May 15, 2006.

A postcard receipt which itemizes and properly identifies the items which are being filed serves as *prima facie* evidence of receipt in the Office of all items listed thereon on the date stamped thereon by the Office.[1]

In view of the above, the petition is **GRANTED**.

Given the basis for granting this petition, the $400 petition fee is Deposit Account No. 06-1135.

The application is being returned to the Office of Initial Patent Examination for further processing, using the application papers filed May 15, 2006, and Figure 7 of the drawings as resupplied on petition filed September 11, 2006, and for indication in Office records that four (4) sheets of drawings were present on filing.

Telephone inquiries related to this decision should be directed to the undersigned at 571-272-3207.

Cliff Congo
Petitions Attorney
Office of Petitions

[1] See MPEP 503.

UNITED STATES PATENT AND TRADEMARK OFFICE

Commissioner for Patents
United States Patent and Trademark Office
P.O. Box 1450
Alexandria, VA 22313-1450
www.uspto.gov

CHARLES A. WILKINSON, ESQ.
68 EAST BROAD STREET
P.O. BOX 1426
BETHLEHEM PA 18016-1426

COPY MAILED

OCT 2 1 2008

OFFICE OF PETITIONS

In re Application of	:	
Robert P. Sherer	:	
Application No. 29/259,811	:	DECISION ON PETITION
Filed: May 16, 2006	:	
Attorney Docket No: 371	:	

This is a decision on the petition under the unintentional provisions of 37 CFR 1.137(b), filed October 10, 2008, to revive the above-identified application.

The petition is **DISMISSED**.

Any request for reconsideration of this decision must be submitted within TWO (2) MONTHS from the mail date of this decision. Extensions of time under 37 CFR 1.136(a) are permitted. The reconsideration request should include a cover letter entitled "Renewed Petition under 37 CFR 1.137(b)." This is **not** a final agency action within the meaning of 5 U.S.C.§ 704.

A grantable petition under 37 CFR 1.137(b) must be accompanied by: (1) the required reply, unless previously filed; (2) the petition fee as set forth in 37 CFR 1.17(m); (3) a statement that the entire delay in filing the required reply from the due date for the reply until the filing of a grantable petition pursuant to 37 CFR 1.137(b) was unintentional; and (4) any terminal disclaimer (and fee as set forth in 37 CFR 1.20(d)) required by 37 CFR 1.137(d). Where there is a question as to whether either the abandonment or the delay in filing a petition under 37 CFR 1.137 was unintentional, the Director may require additional information. See MPEP 711.03(c)(II)(C) and (D). The instant petition lacks item (4).

With respect to item (4), since the instant application is a design application, a terminal disclaimer and fee are required by 37 CFR 1.137(b) for revival. A terminal disclaimer form is enclosed.

Further correspondence with respect to this matter should be addressed as follows:

By Mail:	Mail Stop PETITION Commissioner for Patents P. O. Box 1450 Alexandria, VA 22313-1450
By hand:	U. S. Patent and Trademark Office Customer Service Window, Mail Stop Petitions Randolph Building 401 Dulany Street Alexandria, VA 22314
By facsimile:	(571) 273-8300 Attn: Office of Petitions

Telephone inquiries concerning this decision should be directed to Joan Olszewski at (571) 272-7751.

/Liana Walsh/
Liana Walsh
Petitions Examiner
Office of Petitions

Enclosure: PTO/SB/63 Terminal Disclaimer form

PTO/SB/63 (08-08)
Approved for use through 08/31/2008. OMB 0651-0031
U.S. Patent and Trademark Office; U.S. DEPARTMENT OF COMMERCE
Under the Paperwork Reduction Act of 1995, no persons are required to a collection of information unless it displays a valid OMB control number.

TERMINAL DISCLAIMER TO ACCOMPANY PETITION

Docket Number (Optional)

In re Application of:

Name:

Application Number:

Filed:

For:

The owner*, _____ of _____ percent interest in the above-identified application hereby disclaims a terminal part of the term of any patent granted the above-identified application equivalent to: (1) if the above-identified application is a design application, the period of abandonment of the above-identified application, and (2) if the above-identified application is a utility or plant application, the lesser of: (a) the period of abandonment of the application; or (b) the period extending beyond twenty years from the date on which the above-identified application was filed in the United States or, if the application contains a specific reference to an earlier filed application(s) under 35 U.S.C. 120, 121, or 365(c), from the date on which the earliest such application was filed. This disclaimer also applies to any patent granted on a utility or plant application filed before June 8, 1995, or a design application, that contains a specific reference under 35 U.S.C. 120, 121, or 365(c) to the above-identified application. This disclaimer is binding upon the grantee, and its successors or assigns.

Check either box 1 or 2 below, if appropriate.

1. ☐ For submissions on behalf of an organization (e.g., corporation, partnership, university, government agency, etc.), the undersigned is empowered to act on behalf of the organization.
2. ☐ The undersigned is an attorney or agent of record. Registration Number_____.

Signature	Date
Typed or Printed Name	Telephone Number

☐ Terminal disclaimer fee under 37 CFR 1.20(d) included.

WARNING: Information on this form may become public. Credit card information should not be included on this form. Provide credit card information and authorization on PTO-2038.

* Statement under 37 CFR 3.73(b) is required if terminal disclaimer is signed by the assignee (owner). Form PTO/SB/96 may be used for making this certification. See MPEP § 324.

This collection of information is required by 37 CFR 1.137. The information is required to obtain or retain a benefit by the public which is to file (and by the USPTO to process) an application. Confidentiality is governed by 35 U.S.C. 122 and 37 CFR 1.11 and 1.14. This collection is estimated to take 12 minutes to complete, including gathering, preparing, and submitting the completed application form to the USPTO. Time will vary depending upon the individual case. Any comments on the amount of time you require to complete this form and/or suggestions for reducing this burden, should be sent to the Chief Information Officer, U.S. Patent and Trademark Office, U.S. Department of Commerce, P.O. Box 1450, Alexandria, VA 22313-1450. DO NOT SEND FEES OR COMPLETED FORMS TO THIS ADDRESS. SEND TO: **Commissioner for Patents, P.O. Box 1450, Alexandria, VA 22313-1450.**

If you need assistance in completing the form, call 1-800-PTO-9199 and select option 2.

Privacy Act Statement

The **Privacy Act of 1974 (P.L. 93-579)** requires that you be given certain information in connection with your submission of the attached form related to a patent application or patent. Accordingly, pursuant to the requirements of the Act, please be advised that: (1) the general authority for the collection of this information is 35 U.S.C. 2(b)(2); (2) furnishing of the information solicited is voluntary; and (3) the principal purpose for which the information is used by the U.S. Patent and Trademark Office is to process and/or examine your submission related to a patent application or patent. If you do not furnish the requested information, the U.S. Patent and Trademark Office may not be able to process and/or examine your submission, which may result in termination of proceedings or abandonment of the application or expiration of the patent.

The information provided by you in this form will be subject to the following routine uses:

1. The information on this form will be treated confidentially to the extent allowed under the Freedom of Information Act (5 U.S.C. 552) and the Privacy Act (5 U.S.C 552a). Records from this system of records may be disclosed to the Department of Justice to determine whether disclosure of these records is required by the Freedom of Information Act.
2. A record from this system of records may be disclosed, as a routine use, in the course of presenting evidence to a court, magistrate, or administrative tribunal, including disclosures to opposing counsel in the course of settlement negotiations.
3. A record in this system of records may be disclosed, as a routine use, to a Member of Congress submitting a request involving an individual, to whom the record pertains, when the individual has requested assistance from the Member with respect to the subject matter of the record.
4. A record in this system of records may be disclosed, as a routine use, to a contractor of the Agency having need for the information in order to perform a contract. Recipients of information shall be required to comply with the requirements of the Privacy Act of 1974, as amended, pursuant to 5 U.S.C. 552a(m).
5. A record related to an International Application filed under the Patent Cooperation Treaty in this system of records may be disclosed, as a routine use, to the International Bureau of the World Intellectual Property Organization, pursuant to the Patent Cooperation Treaty.
6. A record in this system of records may be disclosed, as a routine use, to another federal agency for purposes of National Security review (35 U.S.C. 181) and for review pursuant to the Atomic Energy Act (42 U.S.C. 218(c)).
7. A record from this system of records may be disclosed, as a routine use, to the Administrator, General Services, or his/her designee, during an inspection of records conducted by GSA as part of that agency's responsibility to recommend improvements in records management practices and programs, under authority of 44 U.S.C. 2904 and 2906. Such disclosure shall be made in accordance with the GSA regulations governing inspection of records for this purpose, and any other relevant (*i.e.*, GSA or Commerce) directive. Such disclosure shall not be used to make determinations about individuals.
8. A record from this system of records may be disclosed, as a routine use, to the public after either publication of the application pursuant to 35 U.S.C. 122(b) or issuance of a patent pursuant to 35 U.S.C. 151. Further, a record may be disclosed, subject to the limitations of 37 CFR 1.14, as a routine use, to the public if the record was filed in an application which became abandoned or in which the proceedings were terminated and which application is referenced by either a published application, an application open to public inspection or an issued patent.
9. A record from this system of records may be disclosed, as a routine use, to a Federal, State, or local law enforcement agency, if the USPTO becomes aware of a violation or potential violation of law or regulation.

UNITED STATES PATENT AND TRADEMARK OFFICE

Commissioner for Patents
United States Patent and Trademark Office
P.O. Box 1450
Alexandria, VA 22313-1450
www.uspto.gov

CHARLES A. WILKINSON, ESQ.
68 EAST BROAD STREET
P.O. BOX 1426
BETHLEHEM PA 18016-1426

MAILED

JUN 26 2009

OFFICE OF PETITIONS

In re Application of	:	
Robert P. Sherer	:	
Application No. 29/259,811	:	DECISION ON PETITION
Filed: May 16, 2006	:	
Attorney Docket No. 371	:	

This is a decision on the renewed petition under the unintentional provisions of 37 CFR 1.137(b), filed June 10, 2009, to revive the above-identified application.

The petition is **GRANTED**.

This application became abandoned for failure to timely submit Corrected Drawings on or before August 27, 2008, as required by the Notice of Allowability For a Design Application mailed May 27, 2008. Accordingly, the date of abandonment of this application is August 28, 2008. A Notice of Abandonment was mailed September 19, 2008.

The petition satisfies the requirements of 37 CFR 1.137(b) in that petitioner has supplied (1) the reply in the form of Corrected Drawings (previously filed on October 10, 2008); (2) the petition fee of $810.00 (previously paid on October 10, 2008); (3) a proper statement of unintentional delay and (4) a Terminal Disclaimer with the accompanying $70.00 fee.

The request for a terminal disclaimer is accepted and has been made of record.

Telephone inquiries concerning this decision should be directed to Joan Olszewski at (571) 272-7751.

This application is being referred to the Office of Data Management for processing into a patent and review of the Corrected Drawings submitted on October 10, 2008.

/Liana Walsh/
Liana Walsh
Petitions Examiner
Office of Petitions

UNITED STATES PATENT AND TRADEMARK OFFICE

Commissioner for Patents
United States Patent and Trademark Office
P.O. Box 1450
Alexandria, VA 22313-1450
www.uspto.gov

Fitzpatrick Cella (Catalent)
30 Rockefeller Plaza
New York NY 10112

COPY MAILED

FEB 0 2 2009

OFFICE OF PETITIONS

In re Application of

Richard K. Poynter

Application No. 29/259,816

Filed: May 16, 2006

Attorney Docket No. ALP7043D-US

DECISION ON PETITION

This is a decision on the petition under 37 CFR 1.137(b), filed October 26, 2007, to revive the above-identified application.

The petition is **GRANTED**.

The above-cited application became abandoned for failure to reply in a timely manner to the *Ex Parte Quayle* action mailed February 2, 2007, which set a shortened period for reply of two (2) months from its mailing date. No extensions of time were obtained within the allowable period. Accordingly, the application became abandoned on April 3, 2007. A Notice of Abandonment was mailed on September 5, 2007.

The response filed October 26, 2007, is noted.

The terminal disclaimer filed October 26, 2007, is also noted.

The request for an extension of time within the fourth month, filed October 26, 2007, is noted, but cannot be granted as the request was made outside the maximum period for reply to the *Ex Parte Quayle* action. The extension of time is not necessary either because the application was currently in an abandoned status. The amount of $1640.00 will be refunded to deposit account 06-1250

The application is being forwarded to Technology Center 2900, GAU 2914 for further processing.

Telephone inquiries concerning this decision should be directed to the undersigned at (571) 272-3222.

Kenya A. McLaughlin
Petitions Attorney
Office of Petitions

UNITED STATES PATENT AND TRADEMARK OFFICE

Commissioner for Patents
United States Patent and Trademark Office
P.O. Box 1450
Alexandria, VA 22313-1450
www.uspto.gov

WOLF GREENFIELD & SACKS, P.C.
600 ATLANTIC AVENUE
BOSTON, MA 02210-2206

COPY MAILED

OCT 15 2007

OFFICE OF PETITIONS

In re Application of	:
Michael Kent et al	: DECISION GRANTING PETITION
Application No. 29/259,839	: UNDER 37 CFR 1.313(c)(3) (CPA)
Filed: May 16, 2006	:
Attorney Docket No. S1524.70033US00	:

This is a decision on the petition under 37 CFR 1.313(c)(3), filed October 9, 2007 to withdraw the above-identified application from issue after payment of the issue fee.

The petition is **GRANTED**.

The above-identified application is hereby withdrawn from issue in favor of a continued prosecution application (CPA) under 37 CFR 1.53(d).

Petitioner is advised that the issue fee paid on September 13, 2007 in the parent application is not refundable nor can it be applied towards any new Notice of Allowance, which may issue on the CPA filed October 9, 2007.

Telephone inquiries should be directed to Irvin Dingle at (571) 272-3210.

This matter is being referred to Technology Center AU 2913 for processing of the CPA.

Irvin Dingle
Petition Examiner
Office of Petitions

UNITED STATES PATENT AND TRADEMARK OFFICE

Commissioner for Patents
United States Patent and Trademark Office
P.O. Box 1450
Alexandria, VA 22313-1450
www.uspto.gov

LAW OFFICES OF NATAN EPSTEIN
11377 WEST OLYMPIC BOULEVARD
TRIDENT CENTER - 9TH FLOOR
LOS ANGELES CA 90064

COPY MAILED

JUN 30 2008

OFFICE OF PETITIONS

In re Application of	:	
Leah Rotter, et al.	:	
Application No. 29/259,894	:	ON PETITION
Filed: May 17, 2006	:	
Attorney Docket No. DE152	:	

This is a decision on the petition under the unintentional provisions of 37 CFR 1.137(b), filed October 26, 2007, to revive the above-identified application.

The petition is **DISMISSED**.

Any request for reconsideration of this decision must be submitted within TWO (2) MONTHS from the mail date of this decision. Extensions of time under 37 CFR 1.136(a) are permitted. The reconsideration request should include a cover letter entitled "Renewed Petition under 37 CFR 1.137(b)." This is **not** a final agency action within the meaning of 5 U.S.C. § 704.

The application became abandoned for failure to timely pay the issue fee and corrected drawings on or before May 7, 2007, as required by the Notice of Allowance and Fee(s) Due, mailed February 5, 2007, which set a statutory period for reply of three (3) months. Accordingly, the application became abandoned on May 8, 2007.

A grantable petition under 37 CFR 1.137(b) must be accompanied by: (1) the required reply, unless previously filed; (2) the petition fee as set forth in 37 CFR 1.17(m); (3) a statement that the entire delay in filing the required reply from the due date for the reply until the filing of a grantable petition pursuant to 37 CFR 1.137(b) was unintentional; and (4) any terminal disclaimer (and fee as set forth in 37 CFR 1.20(d)) required by 37 CFR 1.137(d). Where there is a question as to whether either the abandonment or the delay in filing a petition under 37 CFR 1.137 was unintentional, the Director may require additional information. See MPEP 711.03(c)(II)(C) and (D). The instant petition lacks item(s) (1).

Corrected drawings are required in application according to the Notice of Allowance mailed February 5, 2007.

Further correspondence with respect to this matter should be addressed as follows:

By Mail: Mail Stop PETITION
Commissioner for Patents
P. O. Box 1450
Alexandria, VA 22313-1450

By hand: U. S. Patent and Trademark Office
Customer Service Window, Mail Stop Petitions
Randolph Building
401 Dulany Street
Alexandria, VA 22314

The centralized facsimile number is **(571) 273-8300.**

Telephone inquiries concerning this decision should be directed to Terri Williams at (571) 272-2991.

Chris Bottorff
Petitions Examiner
Office of Petitions

UNITED STATES PATENT AND TRADEMARK OFFICE

Commissioner for Patents
United States Patent and Trademark Office
P.O. Box 1450
Alexandria, VA 22313-1450
www.uspto.gov

LAW OFFICES OF NATAN EPSTEIN
11377 WEST OLYMPIC BOULEVARD
TRIDENT CENTER - 9TH FLOOR
LOS ANGELES CA 90064

COPY MAILED

OCT 2 1 2008

OFFICE OF PETITIONS

In re Application of	:	
Leah Rotter, et al.	:	
Application No. 29/259,894	:	DECISION ON PETITION
Filed: May 17, 2006	:	
Attorney Docket No. DE152	:	

This is a decision on the renewed petition under the unintentional provisions of 37 CFR 1.137(b), filed August 5, 2008, to revive the above-identified application.

The petition is **GRANTED**.

This application became abandoned for failure to timely pay the issue fee and to submit corrected formal drawings on or before May 7, 2007, as required by the Notice of Allowance and Fee(s) Due and the Notice of Allowability, mailed February 5, 2007. Accordingly, the date of abandonment of this application is May 8, 2007. The Notice of Abandonment was mailed October 22, 2007.

The petition satisfies the requirements of 37 CFR 1.137(b) in that petitioner has supplied (1) the reply in the form of payment of the issue fee of $410, and corrected formal drawings , (2) the petition fee of $770; (3) a terminal disclaimer and fee as required by 37 CFR 1.137(d); and (4) a proper statement of unintentional delay.

The terminal disclaimer is accepted and has been made of record.

Telephone inquiries concerning this decision should be directed to Terri Williams at (571) 272-2991.

This application is being referred to the Office of Data Management for processing into a patent.

Chris Bottorff
Petitions Examiner
Office of Petitions

UNITED STATES PATENT AND TRADEMARK OFFICE

Commissioner for Patents
United States Patent and Trademark Office
P.O. Box 1450
Alexandria, VA 22313-1450
www.uspto.gov

David J. Rotondo
Attorney at Law
The Bates Bldg, Suite 219A
7 North Main Street
Attleboro MA 02703

COPY MAILED

OCT 12 2007

OFFICE OF PETITIONS

In re Application of :
DeCosta :
Application No. 29/259.914 : DECISION ON PETITION
Filed: May 17, 2006 :
Attorney Docket No. N/A :
FOR: SINGLE GANG CABLE PASS THROUGH PLATE

This is a decision on the petition, filed July 30, 2007 (certificate of mailing date July 24, 2007), which is being treated as a petition under 37 CFR 1.181 (no fee) requesting withdrawal of the holding of abandonment in the above-identified application.

The petition is **DISMISSED**.

Any request for reconsideration of this decision should be filed within two (2) months from the mail date of this decision. *Note* 37 CFR 1.181(f). The request for reconsideration should include a cover letter and be entitled as a "Renewed Petition under 37 CFR 1.181 to Withdraw the Holding of Abandonment."

This application was held abandoned for failure to timely pay the issue fee on or before June 25, 2007, as required by the Notice of Allowance and Fee(s) Due (Notice), mailed March 23, 2007.

Petitioner asserts that the Notice dated March 23, 2007 was not received.

A review of the written record indicates no irregularity in the mailing of the Notice, and, in the absence of any irregularity, there is a strong presumption that the Notice was properly mailed to the practitioner at the address of record. This presumption may be overcome by a showing that the Notice was not in fact received. In this regard, the showing required to establish the failure to receive the Notice must consist of the following:

1. a statement from practitioner stating that the Notice was not received by the practitioner;

2. a statement from the practitioner attesting to the fact that a search of the file jacket and docket records indicates that the Notice was not received; and
3. a copy of the docket record where the nonreceived Notice would have been entered had it been received must be attached to and referenced in practitioner's statement.

See MPEP § 711.03(c) under subheading "Petition to Withdraw Holding of Abandonment Based on Failure to Receive Office Action," and "Withdrawing the Holding of Abandonment When Office Actions Are Not Received," 1156 Official Gazette 53 (November 16, 1993).

The petition fails to satisfy requirements (2) and (3). Petitioner has not attested to a thorough, yet fruitless search of the file jacket and docket records pertaining to this application and petitioner has not provided a copy of the docket record where the nonreceived Notice would have been entered had it been received.

Accordingly, absent the required evidence to establish nonreceipt of the Notice of March 23, 2007, the petition requesting withdrawal of the holding of abandonment cannot be granted at this time.

If petitioner cannot supply the evidence necessary to withdraw the holding of abandonment, or simply does not wish to, petitioner should consider filing a petition under 37 CFR 1.137(b) stating that the delay was unintentional. Public Law 97-247, § 3, 96 Stat. 317 (1982), which revised patent and trademark fees, amended 35 U.S.C. § 41(a)(7) to provide for the revival of an "unintentionally" abandoned application without a showing that the delay in prosecution or in late payment of the issue fee was "unavoidable." This amendment to 35 U.S.C. § 41(a)(7) has been implemented in 37 CFR 1.137(b). An "unintentional" petition under 37 CFR 1.137(b) must be accompanied by the $770.00 petition fee and a terminal disclaimer, because this is a design application.

The filing of a petition under 37 CFR 1.137(b) cannot be intentionally delayed and therefore must be filed promptly. A person seeking revival due to unintentional delay cannot make a statement that the delay was unintentional unless the entire delay, including the date it was discovered that the application was abandoned until the filing of the petition to revive under 37 CFR 1.137(b), was unintentional. A statement that the delay was unintentional is not appropriate if petitioner intentionally delayed the filing of a petition for revival under 37 CFR 1.137(b).

Further correspondence with respect to this matter should be addressed as follows:

By Mail: Mail Stop PETITION
Commissioner for Patents
P. O. Box 1450
Alexandria, VA 22313-1450

By hand: U. S. Patent and Trademark Office
Customer Service Window, Mail Stop Petitions
Randolph Building
401 Dulany Street
Alexandria, VA 22314

By facsimile: **(571) 273-8300**
Attn: Office of Petitions

Telephone inquiries concerning this decision should be directed to the undersigned at (571) 272-3230.

Shirene Willis Brantley

Shirene Willis Brantley
Senior Petitions Attorney
Office of Petitions

UNITED STATES PATENT AND TRADEMARK OFFICE

Commissioner for Patents
United States Patent and Trademark Office
P.O. Box 1450
Alexandria, VA 22313-1450
www.uspto.gov

David J. Rotondo
Attorney at Law
The Bates Bldg, Suite 219A
7 North Main Street
Attleboro MA 02703

COPY MAILED

JAN 1 5 2008

OFFICE OF PETITIONS

In re Application of DeCosta Application No. 29/259.914 Filed: May 17, 2006 Attorney Docket No. N/A FOR: SINGLE GANG CABLE PASS THROUGH PLATE	: : : : :	DECISION ON PETITION

This is a decision on the petition, filed November 13, 2007 (certificate of mailing date November 7, 2007), requesting reconsideration of the decision mailed October 12, 2007 that dismissed a petition under 37 CFR 1.181, filed July 30, 2007 (certificate of mailing date July 24, 2007), requesting withdrawal of the holding of abandonment in the above-identified application.

The petition is **GRANTED**.

This application was held abandoned for failure to timely pay the issue fee on or before June 25, 2007, as required by the Notice of Allowance and Fee(s) Due (Notice), mailed March 23, 2007. A Notice of Abandonment was mailed on July 17, 2007.

Petitioner asserts that the Notice dated March 23, 2007 was not received.

A review of the written record indicates no irregularity in the mailing of the Notice, and, in the absence of any irregularity, there is a strong presumption that the Notice was properly mailed to the practitioner at the address of record. This presumption may be overcome by a showing that the Notice was not in fact received. In this regard, the showing required to establish the failure to receive the Notice must consist of the following:

1. a statement from practitioner stating that the Notice was not received by the practitioner;
2. a statement from the practitioner attesting to the fact that a search of the file jacket and docket records indicates that the Notice was not received; and

3. a copy of the docket record where the nonreceived Notice would have been entered had it been received must be attached to and referenced in the practitioner'statement.

See MPEP § 711.03(c) under subheading "Petition to Withdraw Holding of Abandonment Based on Failure to Receive Office Action," and "Withdrawing the Holding of Abandonment When Office Actions Are Not Received," 1156 Official Gazette 53 (November 16, 1993).

The petition satisfies the above-stated requirements. Accordingly, the application was not abandoned in fact.

In view of the above, the Notice of Abandonment is hereby vacated and the holding of abandonment withdrawn.

This application is being referred to the Technology Center technical support staff of Art Unit 2912 for re-mailing the Notice of Allowance and Fee(s) Due and the Notice of Allowability. The period for reply will run from the new mailing date of the Notices.

Telephone inquiries concerning this decision should be directed to the undersigned at (571) 272-3230.

Shirene Willis Brantley

Shirene Willis Brantley
Senior Petitions Attorney
Office of Petitions

UNITED STATES PATENT AND TRADEMARK OFFICE

Commissioner for Patents
United States Patent and Trademark Office
P.O. Box 1450
Alexandria, VA 22313-1450
www.uspto.gov

BSH HOME APPLIANCES CORPORATION
INTELLECTUAL PROPERTY DEPARTMENT
100 BOSCH BOULEVARD
NEW BERN, NC 28562

COPY MAILED

OCT 30 2008

OFFICE OF PETITIONS

In re Application of :
BAACKE, et al. :
Application No. 29/259,917 :
Filed: May 16, 2006 :
Attorney Docket No. **2005M02415US** :

DECISION ON PETITION
UNDER 37 CFR 1.137(b)

This is a decision in response to the petition, filed July 19, 2007, under 37 CFR 1.137(b), and the supplement filed September 10, 2007, to revive the above-identified application.

The petition is **GRANTED.**

The application became abandoned for failure to reply in a timely manner to the Office action under Ex parte Quayle, 1935 Dec. Comm'r Pat. 11 (1935), mailed November 6, 2006, which set a shortened statutory period for reply of two (2) months. No extensions of time under the provisions of 37 CFR 1.136(a) were obtained. Accordingly, the application became abandoned on January 7, 2007.

The petition satisfies the requirements of 37 CFR 1.137(b) in that petitioner has supplied (1) the reply in the form of an amendment and replacement drawings; (2) the petition fee of $1500; (3) a proper statement of unintentional delay; and (4) a terminal disclaimer and fee as required by 37 CFR 1.137(b).

The terminal disclaimer filed September 10, 2007 has been entered and made of record. Any continuing application filed from this application must contain a copy of the terminal disclaimer. The copy of the terminal disclaimer must be filed with a cover letter requesting the terminal disclaimer be recorded on the continuing application.

The drawing(s) have been approved by the USPTO draftsperson.

Telephone inquiries concerning this decision should be directed to Monica A. Graves at (571) 272-7253.

The application file is being referred to Technology Center Art Unit 2912 for consideration of the amendment filed July 19, 2007

Brian W. Brown
Petitions Examiner
Office of Petitions

Application Number	Application/Control No.	Applicant(s)/Patent Under Reexamination
29259917	29/259,917	

Document Code - DISQ	Internal Document – DO NOT MAIL

TERMINAL DISCLAIMER	☒ APPROVED	☐ DISAPPROVED
Date Filed: Sept 10, 2007	This patent is subject to a Terminal Disclaimer	

Approved/Disapproved by:
Monica A. Graves Paralegal Specialist Office of Petitions OCT 23 2008

U.S. Patent and Trademark Office

UNITED STATES PATENT AND TRADEMARK OFFICE

COMMISSIONER FOR PATENTS
UNITED STATES PATENT AND TRADEMARK OFFICE
P.O. BOX 1450
ALEXANDRIA, VA 22313-1450
www.uspto.gov

BSH HOME APPLIANCES CORPORATION
INTELLECTUAL PROPERTY DEPARTMENT
100 BOSCH BOULEVARD
NEW BERN, NC 28562

COPY MAILED

DEC 0 5 2007

OFFICE OF PETITIONS

In re Application of :
Sven Baacke, et al. :
Application No. 29/259,930 : ON PETITION
Filed: May 16, 2006 :
Attorney Docket No. 005M02402US :

This is a decision on the petition, filed July 19, 2007, to revive the above-identified application under the provisions of 37 CFR 1.137(b).

The petition is **GRANTED**.

The application became abandoned for a failure to reply in a timely manner to the Office action under Ex parte Quale, 1935 Dec. Comm'r Pat. 11 (1935) mailed November 6, 2006. A Notice of Abandonment was mailed on June 13, 2007.

The petition satisfies the requirements of 37 CFR 1.137(b) in that petitioner has supplied (1) the reply in the form of an amendment, as well as replacement drawings and a new declaration; (2) the petition fee of $1,500; (3) the requisite statement of unintentional delay and (4) a terminal disclaimer, including the $130 fee as set forth in 37 CFR 1.20(d)).

The terminal disclaimer filed September 10, 2007 has been entered and made of record. Any continuing application filed from this application must contain a copy of the terminal disclaimer. The copy of the terminal disclaimer must be filed with a cover letter requesting the terminal disclaimer be recorded on the continuing application. A copy of this decision should be attached to the cover letter.

The application is being referred to Technology Center AU 2912 for consideration of the response filed July 19, 2007.

Telephone inquiries concerning this decision should be directed to the undersigned at (571) 272-3204. Inquiries relating to further prosecution should be directed to the Technology Center.

Sherry D. Brinkley
Petitions Examiner
Office of Petitions

UNITED STATES PATENT AND TRADEMARK OFFICE

COMMISSIONER FOR PATENTS
UNITED STATES PATENT AND TRADEMARK OFFICE
P.O. BOX 1450
ALEXANDRIA, VA 22313-1450
www.uspto.gov

BSH HOME APPLIANCES CORPORATION
INTELLECTUAL PROPERTY DEPARTMENT
100 BOSCH BOULEVARD
NEW BERN, NC 28562

COPY MAILED

DEC 07 2007

OFFICE OF PETITIONS

In re Application of	:	
Sven Baacke, et al.	:	
Application No. 29/259,931	:	ON PETITION
Filed: May 16, 2006	:	
Attorney Docket No. 2005M02395US	:	

This is a decision on the petition, filed July 19, 2007, to revive the above-identified application under the provisions of 37 CFR 1.137(b).

The petition is **GRANTED**.

The application became abandoned for a failure to reply in a timely manner to the Office action under Ex parte Quale, 1935 Dec. Comm'r Pat. 11 (1935) mailed November 6, 2006. A Notice of Abandonment was mailed on June 13, 2007.

The petition satisfies the requirements of 37 CFR 1.137(b) in that petitioner has supplied (1) the reply in the form of an amendment, as well as replacement drawings and a new declaration; (2) the petition fee of $1,500; (3) the requisite statement of unintentional delay and (4) a terminal disclaimer, including the $130 fee as set forth in 37 CFR 1.20(d)).

The terminal disclaimer filed September 10, 2007 has been entered and made of record. Any continuing application filed from this application must contain a copy of the terminal disclaimer. The copy of the terminal disclaimer must be filed with a cover letter requesting the terminal disclaimer be recorded on the continuing application. A copy of this decision should be attached to the cover letter.

The application is being referred to Technology Center AU 2912 for consideration of the response filed July 19, 2007.

Telephone inquiries concerning this decision should be directed to the undersigned at (571) 272-3204. Inquiries relating to further prosecution should be directed to the Technology Center.

Sherry D. Brinkley
Petitions Examiner
Office of Petitions

UNITED STATES PATENT AND TRADEMARK OFFICE

Commissioner for Patents
United States Patent and Trademark Office
P.O. Box 1450
Alexandria, VA 22313-1450
www.uspto.gov

BSH HOME APPLIANCES CORPORATION
INTELLECTUAL PROPERTY DEPARTMENT
100 BOSCH BOULEVARD
NEW BERN NC 28562

COPY MAILED

SEP 27 2007

OFFICE OF PETITIONS

In re Application of	:	
Baacke et al.	:	
Application No. 29/259,932	:	ON PETITION
Filed: May 16, 2006	:	
Attorney Docket No. 2005M02414US	:	

This is a decision on the petition under 37 C.F.R. § 1.137(b), filed July 19, 2007 and September 10, 2007, to revive the above-identified application.

The petition is **GRANTED.**

The petition satisfies the conditions for revival pursuant to the provisions of 37 CFR 1.137(b) in that (1) the reply in the form of an Amendment, Replacement Drawings and a Substitute Declaration; (2) the petition fee; (3) the terminal disclaimer and fee; and (4) the required statement of unintentional delay have been received. Accordingly, the response has been accepted as having been unintentionally delayed.

This matter is being referred to Technology Center 2900 for further examination on the merits.

Telephone inquiries regarding this decision should be directed to the undersigned at (571) 272-3206.

Liana Walsh
Petitions Examiner
Office of Petitions

UNITED STATES PATENT AND TRADEMARK OFFICE

Commissioner for Patents
United States Patent and Trademark Office
P.O. Box 1450
Alexandria, VA 22313-1450
www.uspto.gov

BSH HOME APPLIANCES CORPORATION
INTELLECTUAL PROPERTY DEPARTMENT
100 BOSCH BOULEVARD
NEW BERN NC 28562

COPY MAILED

AUG 07 2007

OFFICE OF PETITIONS

ON PETITION

In re Application of :
Baacke et al. :
Application No. 29/259,933 :
Filed: May 16, 2006 :
Attorney Docket No. 2005M02394US :

This is a decision on the petition under 37 C.F.R. § 1.137(b), filed July 19, 2007, to revive the above-identified application.

The petition is **DISMISSED**.

Any request for reconsideration must be submitted within TWO (2) MONTHS from the mail date of this decision. No further petition fee is required for the request. Extensions of time under 37 CFR 1.136(a) are permitted. The reconsideration request should include a cover letter entitled "Renewed Petition under 37 CFR 1.137(b)." This is **not** a final agency action within the meaning of 5 U.S.C. § 704.

The above-identified application became abandoned for failure to reply in a timely manner to the Office action under Ex parte Quayle, 1935 Dec. Comm'r Pat. 11 (1935), mailed November 6, 2006, which set a shortened statutory period for reply of two (2) months. No extensions of time under the provisions of 37 CFR 1.136(a) were obtained. Accordingly, the above-identified application became abandoned on January 7, 2007. A Notice of Abandonment was mailed June 13, 2007.

A grantable petition under 37 CFR 1.137(b) must be accompanied by:
(1) the required reply,[1]
(2) the petition fee,
(3) a statement that the entire delay in filing the required reply from the due date for the reply until the filing of a grantable petition pursuant to 37 CFR 1.137(b) was unintentional, and
(4) a terminal disclaimer and fee if the application was filed on or before June 8, 1995 or if the application is a design application.

Where there is a question as to whether either the abandonment or the delay in filing a petition under 37 CFR 1.137 was unintentional, the Commissioner may require additional information.[2]

[1] In a nonprovisional application abandoned for failure to prosecute, the required reply may be met by the filing of a continuing application. In an application or patent, abandoned or lapsed for failure to pay the issue fee or any portion thereof, the required reply must be the payment of the issue fee or any outstanding balance thereof.

The instant petition lacks item (4). Since the instant application is a design application, a terminal disclaimer and fee is required for revival. A blank terminal disclaimer form is enclosed for petitioner's convenience.

Further correspondence with respect to this matter should be addressed as follows:

By mail: Mail Stop PETITIONS
Commissioner for Patents
Post Office Box 1450
Alexandria, VA 22313-1450

By hand: Customer Window located at:

U.S. Patent and Trademark Office
Customer Service Window Randolph Building
401 Dulany Street
Alexandria, VA 22314

By fax: (571) 273-8300
ATTN: Office of Petitions

Any questions concerning this matter may be directed to the undersigned at (571) 272-3206.

Liana Walsh
Petitions Examiner
Office of Petitions

Enclosure: PTO/SB/63

---

[2] See MPEP 711.03(c)(III)(C) and (D).

PTO/SB/63 (04-07)
Approved for use through 09/30/2007. OMB 0651-0031
U.S. Patent and Trademark Office; U.S. DEPARTMENT OF COMMERCE
Under the Paperwork Reduction Act of 1995, no persons are required to a collection of information unless it displays a valid OMB control number.

TERMINAL DISCLAIMER TO ACCOMPANY PETITION	Docket Number (Optional)

In re Application of:

Name:

Application Number:

Filed:

For:

The owner*, _____ of _____ percent interest in the above-identified application hereby disclaims a terminal part of the term of any patent granted the above-identified application equivalent to: (1) if the above-identified application is a design application, the period of abandonment of the above-identified application, and (2) if the above-identified application is a utility or plant application, the lesser of: (a) the period of abandonment of the application; or (b) the period extending beyond twenty years from the date on which the above-identified application was filed in the United States or, if the application contains a specific reference to an earlier filed application(s) under 35 U.S.C. 120, 121, or 365(c), from the date on which the earliest such application was filed. This disclaimer also applies to any patent granted on a utility or plant application filed before June 8, 1995, or a design application, that contains a specific reference under 35 U.S.C. 120, 121, or 365(c) to the above-identified application. This disclaimer is binding upon the grantee, and its successors or assigns.

Check either box 1 or 2 below, if appropriate.

1. ☐ For submissions on behalf of an organization (e.g., corporation, partnership, university, government agency, etc.), the undersigned is empowered to act on behalf of the organization.

2. ☐ The undersigned is an attorney or agent of record. Registration Number_____.

_____	_____
Signature	Date
_____	_____
Typed or Printed Name	Telephone Number

☐ Terminal disclaimer fee under 37 CFR 1.20(d) included.

WARNING: Information on this form may become public. Credit card information should not be included on this form. Provide credit card information and authorization on PTO-2038.

* Statement under 37 CFR 3.73(b) is required if terminal disclaimer is signed by the assignee (owner). Form PTO/SB/96 may be used for making this certification. See MPEP § 324.

This collection of information is required by 37 CFR 1.137. The information is required to obtain or retain a benefit by the public which is to file (and by the USPTO to process) an application. Confidentiality is governed by 35 U.S.C. 122 and 37 CFR 1.11 and 1.14. This collection is estimated to take 12 minutes to complete, including gathering, preparing, and submitting the completed application form to the USPTO. Time will vary depending upon the individual case. Any comments on the amount of time you require to complete this form and/or suggestions for reducing this burden, should be sent to the Chief Information Officer, U.S. Patent and Trademark Office, U.S. Department of Commerce, P.O. Box 1450, Alexandria, VA 22313-1450. DO NOT SEND FEES OR COMPLETED FORMS TO THIS ADDRESS. **SEND TO: Commissioner for Patents, P.O. Box 1450, Alexandria, VA 22313-1450.**

If you need assistance in completing the form, call 1-800-PTO-9199 and select option 2.

Privacy Act Statement

The **Privacy Act of 1974 (P.L. 93-579)** requires that you be given certain information in connection with your submission of the attached form related to a patent application or patent. Accordingly, pursuant to the requirements of the Act, please be advised that: (1) the general authority for the collection of this information is 35 U.S.C. 2(b)(2); (2) furnishing of the information solicited is voluntary; and (3) the principal purpose for which the information is used by the U.S. Patent and Trademark Office is to process and/or examine your submission related to a patent application or patent. If you do not furnish the requested information, the U.S. Patent and Trademark Office may not be able to process and/or examine your submission, which may result in termination of proceedings or abandonment of the application or expiration of the patent.

The information provided by you in this form will be subject to the following routine uses:

1. The information on this form will be treated confidentially to the extent allowed under the Freedom of Information Act (5 U.S.C. 552) and the Privacy Act (5 U.S.C 552a). Records from this system of records may be disclosed to the Department of Justice to determine whether disclosure of these records is required by the Freedom of Information Act.
2. A record from this system of records may be disclosed, as a routine use, in the course of presenting evidence to a court, magistrate, or administrative tribunal, including disclosures to opposing counsel in the course of settlement negotiations.
3. A record in this system of records may be disclosed, as a routine use, to a Member of Congress submitting a request involving an individual, to whom the record pertains, when the individual has requested assistance from the Member with respect to the subject matter of the record.
4. A record in this system of records may be disclosed, as a routine use, to a contractor of the Agency having need for the information in order to perform a contract. Recipients of information shall be required to comply with the requirements of the Privacy Act of 1974, as amended, pursuant to 5 U.S.C. 552a(m).
5. A record related to an International Application filed under the Patent Cooperation Treaty in this system of records may be disclosed, as a routine use, to the International Bureau of the World Intellectual Property Organization, pursuant to the Patent Cooperation Treaty.
6. A record in this system of records may be disclosed, as a routine use, to another federal agency for purposes of National Security review (35 U.S.C. 181) and for review pursuant to the Atomic Energy Act (42 U.S.C. 218(c)).
7. A record from this system of records may be disclosed, as a routine use, to the Administrator, General Services, or his/her designee, during an inspection of records conducted by GSA as part of that agency's responsibility to recommend improvements in records management practices and programs, under authority of 44 U.S.C. 2904 and 2906. Such disclosure shall be made in accordance with the GSA regulations governing inspection of records for this purpose, and any other relevant (*i.e.*, GSA or Commerce) directive. Such disclosure shall not be used to make determinations about individuals.
8. A record from this system of records may be disclosed, as a routine use, to the public after either publication of the application pursuant to 35 U.S.C. 122(b) or issuance of a patent pursuant to 35 U.S.C. 151. Further, a record may be disclosed, subject to the limitations of 37 CFR 1.14, as a routine use, to the public if the record was filed in an application which became abandoned or in which the proceedings were terminated and which application is referenced by either a published application, an application open to public inspection or an issued patent.
9. A record from this system of records may be disclosed, as a routine use, to a Federal, State, or local law enforcement agency, if the USPTO becomes aware of a violation or potential violation of law or regulation.

UNITED STATES PATENT AND TRADEMARK OFFICE

Commissioner for Patents
United States Patent and Trademark Office
P.O. Box 1450
Alexandria, VA 22313-1450
www.uspto.gov

BSH HOME APPLIANCES CORPORATION
INTELLECTUAL PROPERTY DEPARTMENT
100 BOSCH BOULEVARD
NEW BERN NC 28562

COPY MAILED

SEP 27 2007

OFFICE OF PETITIONS

In re Application of	:	
Baacke et al.	:	
Application No. 29/259,933	:	ON PETITION
Filed: May 16, 2006	:	
Attorney Docket No. 2005M02394US	:	

This is a decision on the renewed petition under 37 C.F.R. § 1.137(b), filed September 10, 2007, to revive the above-identified application.

The petition is **GRANTED.**

The terminal disclaimer and fee have been received and accepted.

This matter is being referred to Technology Center 2900 for further examination on the merits.

Telephone inquiries regarding this decision should be directed to the undersigned at (571) 272-3206.

Liana Walsh
Petitions Examiner
Office of Petitions

UNITED STATES PATENT AND TRADEMARK OFFICE

Commissioner for Patents
United States Patent and Trademark Office
P.O. Box 1450
Alexandria, VA 22313-1450
www.uspto.gov

BSH HOME APPLIANCES CORPORATION
INTELLECTUAL PROPERTY DEPARTMENT
100 BOSCH BOULEVARD
NEW BERN NC 28562

COPY MAILED

AUG 07 2007

OFFICE OF PETITIONS

ON PETITION

In re Application of	:	
Baacke et al.	:	
Application No. 29/259,934	:	
Filed: May 16, 2006	:	
Attorney Docket No. 2005M02391US	:	

This is a decision on the petition under 37 C.F.R. § 1.137(b), filed July 19, 2007, to revive the above-identified application.

The petition is **DISMISSED**.

Any request for reconsideration must be submitted within TWO (2) MONTHS from the mail date of this decision. No further petition fee is required for the request. Extensions of time under 37 CFR 1.136(a) are permitted. The reconsideration request should include a cover letter entitled "Renewed Petition under 37 CFR 1.137(b)." This is **not** a final agency action within the meaning of 5 U.S.C. § 704.

The above-identified application became abandoned for failure to reply in a timely manner to the Office action under Ex parte Quayle, 1935 Dec. Comm'r Pat. 11 (1935), mailed November 6, 2006, which set a shortened statutory period for reply of two (2) months. No extensions of time under the provisions of 37 CFR 1.136(a) were obtained. Accordingly, the above-identified application became abandoned on January 7, 2007. A Notice of Abandonment was mailed June 13, 2007.

A grantable petition under 37 CFR 1.137(b) must be accompanied by:
(1) the required reply,[1]
(2) the petition fee,
(3) a statement that the entire delay in filing the required reply from the due date for the reply until the filing of a grantable petition pursuant to 37 CFR 1.137(b) was unintentional, and
(4) a terminal disclaimer and fee if the application was filed on or before June 8, 1995 or if the application is a design application.

Where there is a question as to whether either the abandonment or the delay in filing a petition under 37 CFR 1.137 was unintentional, the Commissioner may require additional information.[2]

[1] In a nonprovisional application abandoned for failure to prosecute, the required reply may be met by the filing of a continuing application. In an application or patent, abandoned or lapsed for failure to pay the issue fee or any portion thereof, the required reply must be the payment of the issue fee or any outstanding balance thereof.

The instant petition lacks item (4). Since the instant application is a design application, a terminal disclaimer and fee is required for revival. A blank terminal disclaimer form is enclosed for petitioner's convenience.

Further correspondence with respect to this matter should be addressed as follows:

By mail: Mail Stop PETITIONS
Commissioner for Patents
Post Office Box 1450
Alexandria, VA 22313-1450

By hand: Customer Window located at:

U.S. Patent and Trademark Office
Customer Service Window Randolph Building
401 Dulany Street
Alexandria, VA 22314

By fax: (571) 273-8300
ATTN: Office of Petitions

Any questions concerning this matter may be directed to the undersigned at (571) 272-3206.

Liana Walsh
Petitions Examiner
Office of Petitions

Enclosure: PTO/SB/63

---

[2] See MPEP 711.03(c)(III)(C) and (D).

PTO/SB/63 (04-07)
Approved for use through 09/30/2007. OMB 0651-0031
U.S. Patent and Trademark Office; U.S. DEPARTMENT OF COMMERCE
Under the Paperwork Reduction Act of 1995, no persons are required to a collection of information unless it displays a valid OMB control number.

TERMINAL DISCLAIMER TO ACCOMPANY PETITION

Docket Number (Optional)

In re Application of:

Name:

Application Number:

Filed:

For:

The owner*, _____ of _____ percent interest in the above-identified application hereby disclaims a terminal part of the term of any patent granted the above-identified application equivalent to: (1) if the above-identified application is a design application, the period of abandonment of the above-identified application, and (2) if the above-identified application is a utility or plant application, the lesser of: (a) the period of abandonment of the application; or (b) the period extending beyond twenty years from the date on which the above-identified application was filed in the United States or, if the application contains a specific reference to an earlier filed application(s) under 35 U.S.C. 120, 121, or 365(c); from the date on which the earliest such application was filed. This disclaimer also applies to any patent granted on a utility or plant application filed before June 8, 1995, or a design application, that contains a specific reference under 35 U.S.C. 120, 121, or 365(c) to the above-identified application. This disclaimer is binding upon the grantee, and its successors or assigns.

Check either box 1 or 2 below, if appropriate.

1. ☐ For submissions on behalf of an organization (e.g., corporation, partnership, university, government agency, etc.), the undersigned is empowered to act on behalf of the organization.
2. ☐ The undersigned is an attorney or agent of record. Registration Number_____.

Signature	Date
Typed or Printed Name	Telephone Number

☐ Terminal disclaimer fee under 37 CFR 1.20(d) included.

WARNING: Information on this form may become public. Credit card information should not be included on this form. Provide credit card information and authorization on PTO-2038.

* Statement under 37 CFR 3.73(b) is required if terminal disclaimer is signed by the assignee (owner). Form PTO/SB/96 may be used for making this certification. See MPEP § 324.

This collection of information is required by 37 CFR 1.137. The information is required to obtain or retain a benefit by the public which is to file (and by the USPTO to process) an application. Confidentiality is governed by 35 U.S.C. 122 and 37 CFR 1.11 and 1.14. This collection is estimated to take 12 minutes to complete, including gathering, preparing, and submitting the completed application form to the USPTO. Time will vary depending upon the individual case. Any comments on the amount of time you require to complete this form and/or suggestions for reducing this burden, should be sent to the Chief Information Officer, U.S. Patent and Trademark Office, U.S. Department of Commerce, P.O. Box 1450, Alexandria, VA 22313-1450. DO NOT SEND FEES OR COMPLETED FORMS TO THIS ADDRESS. **SEND TO: Commissioner for Patents, P.O. Box 1450, Alexandria, VA 22313-1450.**

If you need assistance in completing the form, call 1-800-PTO-9199 and select option 2.

Privacy Act Statement

The **Privacy Act of 1974 (P.L. 93-579)** requires that you be given certain information in connection with your submission of the attached form related to a patent application or patent. Accordingly, pursuant to the requirements of the Act, please be advised that: (1) the general authority for the collection of this information is 35 U.S.C. 2(b)(2); (2) furnishing of the information solicited is voluntary; and (3) the principal purpose for which the information is used by the U.S. Patent and Trademark Office is to process and/or examine your submission related to a patent application or patent. If you do not furnish the requested information, the U.S. Patent and Trademark Office may not be able to process and/or examine your submission, which may result in termination of proceedings or abandonment of the application or expiration of the patent.

The information provided by you in this form will be subject to the following routine uses:

1. The information on this form will be treated confidentially to the extent allowed under the Freedom of Information Act (5 U.S.C. 552) and the Privacy Act (5 U.S.C 552a). Records from this system of records may be disclosed to the Department of Justice to determine whether disclosure of these records is required by the Freedom of Information Act.
2. A record from this system of records may be disclosed, as a routine use, in the course of presenting evidence to a court, magistrate, or administrative tribunal, including disclosures to opposing counsel in the course of settlement negotiations.
3. A record in this system of records may be disclosed, as a routine use, to a Member of Congress submitting a request involving an individual, to whom the record pertains, when the individual has requested assistance from the Member with respect to the subject matter of the record.
4. A record in this system of records may be disclosed, as a routine use, to a contractor of the Agency having need for the information in order to perform a contract. Recipients of information shall be required to comply with the requirements of the Privacy Act of 1974, as amended, pursuant to 5 U.S.C. 552a(m).
5. A record related to an International Application filed under the Patent Cooperation Treaty in this system of records may be disclosed, as a routine use, to the International Bureau of the World Intellectual Property Organization, pursuant to the Patent Cooperation Treaty.
6. A record in this system of records may be disclosed, as a routine use, to another federal agency for purposes of National Security review (35 U.S.C. 181) and for review pursuant to the Atomic Energy Act (42 U.S.C. 218(c)).
7. A record from this system of records may be disclosed, as a routine use, to the Administrator, General Services, or his/her designee, during an inspection of records conducted by GSA as part of that agency's responsibility to recommend improvements in records management practices and programs, under authority of 44 U.S.C. 2904 and 2906. Such disclosure shall be made in accordance with the GSA regulations governing inspection of records for this purpose, and any other relevant (*i.e.*, GSA or Commerce) directive. Such disclosure shall not be used to make determinations about individuals.
8. A record from this system of records may be disclosed, as a routine use, to the public after either publication of the application pursuant to 35 U.S.C. 122(b) or issuance of a patent pursuant to 35 U.S.C. 151. Further, a record may be disclosed, subject to the limitations of 37 CFR 1.14, as a routine use, to the public if the record was filed in an application which became abandoned or in which the proceedings were terminated and which application is referenced by either a published application, an application open to public inspection or an issued patent.
9. A record from this system of records may be disclosed, as a routine use, to a Federal, State, or local law enforcement agency, if the USPTO becomes aware of a violation or potential violation of law or regulation.

UNITED STATES PATENT AND TRADEMARK OFFICE

Commissioner for Patents
United States Patent and Trademark Office
P.O. Box 1450
Alexandria, VA 22313-1450
www.uspto.gov

BSH HOME APPLIANCES CORPORATION
INTELLECTUAL PROPERTY DEPARTMENT
100 BOSCH BOULEVARD
NEW BERN NC 28562

COPY MAILED

SEP 27 2007

OFFICE OF PETITIONS

In re Application of	:	
Baacke et al.	:	
Application No. 29/259,934	:	ON PETITION
Filed: May 16, 2006	:	
Attorney Docket No. 2005M02391US	:	

This is a decision on the renewed petition under 37 C.F.R. § 1.137(b), filed September 10, 2007, to revive the above-identified application.

The petition is **GRANTED.**

The terminal disclaimer and fee have been received and accepted.

This matter is being referred to Technology Center 2900 for further examination on the merits.

Telephone inquiries regarding this decision should be directed to the undersigned at (571) 272-3206.

Liana Walsh
Petitions Examiner
Office of Petitions

UNITED STATES PATENT AND TRADEMARK OFFICE

Commissioner for Patents
United States Patent and Trademark Office
P.O. Box 1450
Alexandria, VA 22313-1450
www.uspto.gov

BSH HOME APPLIANCES CORPORATION
INTELLECTUAL PROPERTY DEPARTMENT
100 BOSCH BOULEVARD
NEW BERN NC 28562

COPY MAILED

AUG 07 2007

OFFICE OF PETITIONS

In re Application of	:	
Baacke et al.	:	
Application No. 29/259,936	:	ON PETITION
Filed: May 16, 2006	:	
Attorney Docket No. 2005M02388US	:	

This is a decision on the petition under 37 C.F.R. § 1.137(b), filed July 19, 2007, to revive the above-identified application.

The petition is **DISMISSED**.

Any request for reconsideration must be submitted within TWO (2) MONTHS from the mail date of this decision. No further petition fee is required for the request. Extensions of time under 37 CFR 1.136(a) are permitted. The reconsideration request should include a cover letter entitled "Renewed Petition under 37 CFR 1.137(b)." This is **not** a final agency action within the meaning of 5 U.S.C. § 704.

The above-identified application became abandoned for failure to reply in a timely manner to the Office action under Ex parte Quayle, 1935 Dec. Comm'r Pat. 11 (1935), mailed November 6, 2006, which set a shortened statutory period for reply of two (2) months. No extensions of time under the provisions of 37 CFR 1.136(a) were obtained. Accordingly, the above-identified application became abandoned on January 7, 2007. A Notice of Abandonment was mailed June 13, 2007.

A grantable petition under 37 CFR 1.137(b) must be accompanied by:
(1) the required reply,[1]
(2) the petition fee,
(3) a statement that the entire delay in filing the required reply from the due date for the reply until the filing of a grantable petition pursuant to 37 CFR 1.137(b) was unintentional, and
(4) a terminal disclaimer and fee if the application was filed on or before June 8, 1995 or if the application is a design application.

Where there is a question as to whether either the abandonment or the delay in filing a petition under 37 CFR 1.137 was unintentional, the Commissioner may require additional information.[2]

[1] In a nonprovisional application abandoned for failure to prosecute, the required reply may be met by the filing of a continuing application. In an application or patent, abandoned or lapsed for failure to pay the issue fee or any portion thereof, the required reply must be the payment of the issue fee or any outstanding balance thereof.

The instant petition lacks item (4). Since the instant application is a design application, a terminal disclaimer and fee is required for revival. A blank terminal disclaimer form is enclosed for petitioner's convenience.

Further correspondence with respect to this matter should be addressed as follows:

By mail: Mail Stop PETITIONS
Commissioner for Patents
Post Office Box 1450
Alexandria, VA 22313-1450

By hand: Customer Window located at:

U.S. Patent and Trademark Office
Customer Service Window Randolph Building
401 Dulany Street
Alexandria, VA 22314

By fax: (571) 273-8300
ATTN: Office of Petitions

Any questions concerning this matter may be directed to the undersigned at (571) 272-3206.

Liana Walsh
Petitions Examiner
Office of Petitions

Enclosure: PTO/SB/63

---

[2] See MPEP 711.03(c)(III)(C) and (D).

PTO/SB/63 (04-07)
Approved for use through 09/30/2007. OMB 0651-0031
U.S. Patent and Trademark Office; U.S. DEPARTMENT OF COMMERCE
Under the Paperwork Reduction Act of 1995, no persons are required to a collection of information unless it displays a valid OMB control number.

TERMINAL DISCLAIMER TO ACCOMPANY PETITION

Docket Number (Optional)

In re Application of:

Name:

Application Number:

Filed:

For:

The owner*, _____ of _____ percent interest in the above-identified application hereby disclaims a terminal part of the term of any patent granted the above-identified application equivalent to: (1) if the above-identified application is a design application, the period of abandonment of the above-identified application, and (2) if the above-identified application is a utility or plant application, the lesser of: (a) the period of abandonment of the application; or (b) the period extending beyond twenty years from the date on which the above-identified application was filed in the United States or, if the application contains a specific reference to an earlier filed application(s) under 35 U.S.C. 120, 121, or 365(c), from the date on which the earliest such application was filed. This disclaimer also applies to any patent granted on a utility or plant application filed before June 8, 1995, or a design application, that contains a specific reference under 35 U.S.C. 120, 121, or 365(c) to the above-identified application. This disclaimer is binding upon the grantee, and its successors or assigns.

Check either box 1 or 2 below, if appropriate.

1. ☐ For submissions on behalf of an organization (e.g., corporation, partnership, university, government agency, etc.), the undersigned is empowered to act on behalf of the organization.
2. ☐ The undersigned is an attorney or agent of record. Registration Number_____.

Signature	Date
Typed or Printed Name	Telephone Number

☐ Terminal disclaimer fee under 37 CFR 1.20(d) included.

WARNING: Information on this form may become public. Credit card information should not be included on this form. Provide credit card information and authorization on PTO-2038.

* Statement under 37 CFR 3.73(b) is required if terminal disclaimer is signed by the assignee (owner). Form PTO/SB/96 may be used for making this certification. See MPEP § 324.

This collection of information is required by 37 CFR 1.137. The information is required to obtain or retain a benefit by the public which is to file (and by the USPTO to process) an application. Confidentiality is governed by 35 U.S.C. 122 and 37 CFR 1.11 and 1.14. This collection is estimated to take 12 minutes to complete, including gathering, preparing, and submitting the completed application form to the USPTO. Time will vary depending upon the individual case. Any comments on the amount of time you require to complete this form and/or suggestions for reducing this burden, should be sent to the Chief Information Officer, U.S. Patent and Trademark Office, U.S. Department of Commerce, P.O. Box 1450, Alexandria, VA 22313-1450. DO NOT SEND FEES OR COMPLETED FORMS TO THIS ADDRESS. **SEND TO: Commissioner for Patents, P.O. Box 1450, Alexandria, VA 22313-1450.**

If you need assistance in completing the form, call 1-800-PTO-9199 and select option 2.

Privacy Act Statement

The **Privacy Act of 1974 (P.L. 93-579)** requires that you be given certain information in connection with your submission of the attached form related to a patent application or patent. Accordingly, pursuant to the requirements of the Act, please be advised that: (1) the general authority for the collection of this information is 35 U.S.C. 2(b)(2); (2) furnishing of the information solicited is voluntary; and (3) the principal purpose for which the information is used by the U.S. Patent and Trademark Office is to process and/or examine your submission related to a patent application or patent. If you do not furnish the requested information, the U.S. Patent and Trademark Office may not be able to process and/or examine your submission, which may result in termination of proceedings or abandonment of the application or expiration of the patent.

The information provided by you in this form will be subject to the following routine uses:

1. The information on this form will be treated confidentially to the extent allowed under the Freedom of Information Act (5 U.S.C. 552) and the Privacy Act (5 U.S.C 552a). Records from this system of records may be disclosed to the Department of Justice to determine whether disclosure of these records is required by the Freedom of Information Act.
2. A record from this system of records may be disclosed, as a routine use, in the course of presenting evidence to a court, magistrate, or administrative tribunal, including disclosures to opposing counsel in the course of settlement negotiations.
3. A record in this system of records may be disclosed, as a routine use, to a Member of Congress submitting a request involving an individual, to whom the record pertains, when the individual has requested assistance from the Member with respect to the subject matter of the record.
4. A record in this system of records may be disclosed, as a routine use, to a contractor of the Agency having need for the information in order to perform a contract. Recipients of information shall be required to comply with the requirements of the Privacy Act of 1974, as amended, pursuant to 5 U.S.C. 552a(m).
5. A record related to an International Application filed under the Patent Cooperation Treaty in this system of records may be disclosed, as a routine use, to the International Bureau of the World Intellectual Property Organization, pursuant to the Patent Cooperation Treaty.
6. A record in this system of records may be disclosed, as a routine use, to another federal agency for purposes of National Security review (35 U.S.C. 181) and for review pursuant to the Atomic Energy Act (42 U.S.C. 218(c)).
7. A record from this system of records may be disclosed, as a routine use, to the Administrator, General Services, or his/her designee, during an inspection of records conducted by GSA as part of that agency's responsibility to recommend improvements in records management practices and programs, under authority of 44 U.S.C. 2904 and 2906. Such disclosure shall be made in accordance with the GSA regulations governing inspection of records for this purpose, and any other relevant (*i.e.*, GSA or Commerce) directive. Such disclosure shall not be used to make determinations about individuals.
8. A record from this system of records may be disclosed, as a routine use, to the public after either publication of the application pursuant to 35 U.S.C. 122(b) or issuance of a patent pursuant to 35 U.S.C. 151. Further, a record may be disclosed, subject to the limitations of 37 CFR 1.14, as a routine use, to the public if the record was filed in an application which became abandoned or in which the proceedings were terminated and which application is referenced by either a published application, an application open to public inspection or an issued patent.
9. A record from this system of records may be disclosed, as a routine use, to a Federal, State, or local law enforcement agency, if the USPTO becomes aware of a violation or potential violation of law or regulation.

UNITED STATES PATENT AND TRADEMARK OFFICE

Commissioner for Patents
United States Patent and Trademark Office
P.O. Box 1450
Alexandria, VA 22313-1450
www.uspto.gov

BSH HOME APPLIANCES CORPORATION
INTELLECTUAL PROPERTY DEPARTMENT
100 BOSCH BOULEVARD
NEW BERN NC 28562

COPY MAILED

SEP 14 2007

OFFICE OF PETITIONS

In re Application of	:	
Baacke et al.	:	
Application No. 29/259,936	:	ON PETITION
Filed: May 16, 2006	:	
Attorney Docket No. 2005M02388US	:	

This is a decision on the renewed petition under 37 C.F.R. § 1.137(b), filed September 10, 2007, to revive the above-identified application.

The petition is **GRANTED.**

The requisite terminal disclaimer and fee have been received.

This matter is being referred to Technology Center 2900 for further examination on the merits.

Telephone inquiries regarding this decision should be directed to the undersigned at (571) 272-3206.

Liana Walsh
Petitions Examiner
Office of Petitions

UNITED STATES PATENT AND TRADEMARK OFFICE

Commissioner for Patents
United States Patent and Trademark Office
P.O. Box 1450
Alexandria, VA 22313-1450
www.uspto.gov

BSH HOME APPLIANCES CORPORATION
INTELLECTUAL PROPERTY DEPARTMENT
100 BOSCH BOULEVARD
NEW BERN NC 28562

COPY MAILED

AUG 0 3 2007

OFFICE OF PETITIONS

In re Application of	:	
Baacke et al.	:	
Application No. 29/259,938	:	ON PETITION
Filed: May 16, 2006	:	
Attorney Docket No. 2005M02401US	:	

This is a decision on the petition under 37 C.F.R. § 1.137(b), filed July 19, 2007, to revive the above-identified application.

The petition is **DISMISSED**.

Any request for reconsideration must be submitted within TWO (2) MONTHS from the mail date of this decision. No further petition fee is required for the request. Extensions of time under 37 CFR 1.136(a) are permitted. The reconsideration request should include a cover letter entitled "Renewed Petition under 37 CFR 1.137(b)." This is **not** a final agency action within the meaning of 5 U.S.C. § 704.

The above-identified application became abandoned for failure to reply in a timely manner to the Office action under Ex parte Quayle, 1935 Dec. Comm'r Pat. 11 (1935), mailed November 6, 2006, which set a shortened statutory period for reply of two (2) months. No extensions of time under the provisions of 37 CFR 1.136(a) were obtained. Accordingly, the above-identified application became abandoned on January 7, 2007. A Notice of Abandonment was mailed June 13, 2007.

A grantable petition under 37 CFR 1.137(b) must be accompanied by:
(1) the required reply,[1]
(2) the petition fee,
(3) a statement that the entire delay in filing the required reply from the due date for the reply until the filing of a grantable petition pursuant to 37 CFR 1.137(b) was unintentional, and
(4) a terminal disclaimer and fee if the application was filed on or before June 8, 1995 or if the application is a design application.

Where there is a question as to whether either the abandonment or the delay in filing a petition under 37 CFR 1.137 was unintentional, the Commissioner may require additional information.[2]

[1] In a nonprovisional application abandoned for failure to prosecute, the required reply may be met by the filing of a continuing application. In an application or patent, abandoned or lapsed for failure to pay the issue fee or any portion thereof, the required reply must be the payment of the issue fee or any outstanding balance thereof.

The instant petition lacks item (4). A terminal disclaimer must be submitted with a petition under 37 CFR 1.137(b) submitted in a design application. A blank form is enclosed for petitioner's convenience.

Further correspondence with respect to this matter should be addressed as follows:

By mail: Mail Stop PETITIONS
Commissioner for Patents
Post Office Box 1450
Alexandria, VA 22313-1450

By hand: Customer Window located at:

U.S. Patent and Trademark Office
Customer Service Window Randolph Building
401 Dulany Street
Alexandria, VA 22314

By fax: (571) 273-8300
ATTN: Office of Petitions

Any questions concerning this matter may be directed to the undersigned at (571) 272-3206.

Liana Walsh
Petitions Examiner
Office of Petitions

Enclosure: PTO/SB/63

---

[2] See MPEP 711.03(c)(III)(C) and (D).

PTO/SB/63 (04-07)
Approved for use through 09/30/2007. OMB 0651-0031
U.S. Patent and Trademark Office; U.S. DEPARTMENT OF COMMERCE
Under the Paperwork Reduction Act of 1995, no persons are required to a collection of information unless it displays a valid OMB control number.

TERMINAL DISCLAIMER TO ACCOMPANY PETITION	Docket Number (Optional)

In re Application of:

Name:

Application Number:

Filed:

For:

The owner*, _____ of _____ percent interest in the above-identified application hereby disclaims a terminal part of the term of any patent granted the above-identified application equivalent to: (1) if the above-identified application is a design application, the period of abandonment of the above-identified application, and (2) if the above-identified application is a utility or plant application, the lesser of: (a) the period of abandonment of the application; or (b) the period extending beyond twenty years from the date on which the above-identified application was filed in the United States or, if the application contains a specific reference to an earlier filed application(s) under 35 U.S.C. 120, 121, or 365(c), from the date on which the earliest such application was filed. This disclaimer also applies to any patent granted on a utility or plant application filed before June 8, 1995, or a design application, that contains a specific reference under 35 U.S.C. 120, 121, or 365(c) to the above-identified application. This disclaimer is binding upon the grantee, and its successors or assigns.

Check either box 1 or 2 below, if appropriate.

1. ☐ For submissions on behalf of an organization (e.g., corporation, partnership, university, government agency, etc.), the undersigned is empowered to act on behalf of the organization.
2. ☐ The undersigned is an attorney or agent of record. Registration Number_____.

_____	_____
Signature	Date
_____	_____
Typed or Printed Name	Telephone Number

☐ Terminal disclaimer fee under 37 CFR 1.20(d) included.

WARNING: Information on this form may become public. Credit card information should not be included on this form. Provide credit card information and authorization on PTO-2038.

* Statement under 37 CFR 3.73(b) is required if terminal disclaimer is signed by the assignee (owner). Form PTO/SB/96 may be used for making this certification. See MPEP § 324.

This collection of information is required by 37 CFR 1.137. The information is required to obtain or retain a benefit by the public which is to file (and by the USPTO to process) an application. Confidentiality is governed by 35 U.S.C. 122 and 37 CFR 1.11 and 1.14. This collection is estimated to take 12 minutes to complete, including gathering, preparing, and submitting the completed application form to the USPTO. Time will vary depending upon the individual case. Any comments on the amount of time you require to complete this form and/or suggestions for reducing this burden, should be sent to the Chief Information Officer, U.S. Patent and Trademark Office, U.S. Department of Commerce, P.O. Box 1450, Alexandria, VA 22313-1450. DO NOT SEND FEES OR COMPLETED FORMS TO THIS ADDRESS. SEND TO: **Commissioner for Patents, P.O. Box 1450, Alexandria, VA 22313-1450.**

If you need assistance in completing the form, call 1-800-PTO-9199 and select option 2.

Privacy Act Statement

The **Privacy Act of 1974 (P.L. 93-579)** requires that you be given certain information in connection with your submission of the attached form related to a patent application or patent. Accordingly, pursuant to the requirements of the Act, please be advised that: (1) the general authority for the collection of this information is 35 U.S.C. 2(b)(2); (2) furnishing of the information solicited is voluntary; and (3) the principal purpose for which the information is used by the U.S. Patent and Trademark Office is to process and/or examine your submission related to a patent application or patent. If you do not furnish the requested information, the U.S. Patent and Trademark Office may not be able to process and/or examine your submission, which may result in termination of proceedings or abandonment of the application or expiration of the patent.

The information provided by you in this form will be subject to the following routine uses:

1. The information on this form will be treated confidentially to the extent allowed under the Freedom of Information Act (5 U.S.C. 552) and the Privacy Act (5 U.S.C 552a). Records from this system of records may be disclosed to the Department of Justice to determine whether disclosure of these records is required by the Freedom of Information Act.
2. A record from this system of records may be disclosed, as a routine use, in the course of presenting evidence to a court, magistrate, or administrative tribunal, including disclosures to opposing counsel in the course of settlement negotiations.
3. A record in this system of records may be disclosed, as a routine use, to a Member of Congress submitting a request involving an individual, to whom the record pertains, when the individual has requested assistance from the Member with respect to the subject matter of the record.
4. A record in this system of records may be disclosed, as a routine use, to a contractor of the Agency having need for the information in order to perform a contract. Recipients of information shall be required to comply with the requirements of the Privacy Act of 1974, as amended, pursuant to 5 U.S.C. 552a(m).
5. A record related to an International Application filed under the Patent Cooperation Treaty in this system of records may be disclosed, as a routine use, to the International Bureau of the World Intellectual Property Organization, pursuant to the Patent Cooperation Treaty.
6. A record in this system of records may be disclosed, as a routine use, to another federal agency for purposes of National Security review (35 U.S.C. 181) and for review pursuant to the Atomic Energy Act (42 U.S.C. 218(c)).
7. A record from this system of records may be disclosed, as a routine use, to the Administrator, General Services, or his/her designee, during an inspection of records conducted by GSA as part of that agency's responsibility to recommend improvements in records management practices and programs, under authority of 44 U.S.C. 2904 and 2906. Such disclosure shall be made in accordance with the GSA regulations governing inspection of records for this purpose, and any other relevant (*i.e.*, GSA or Commerce) directive. Such disclosure shall not be used to make determinations about individuals.
8. A record from this system of records may be disclosed, as a routine use, to the public after either publication of the application pursuant to 35 U.S.C. 122(b) or issuance of a patent pursuant to 35 U.S.C. 151. Further, a record may be disclosed, subject to the limitations of 37 CFR 1.14, as a routine use, to the public if the record was filed in an application which became abandoned or in which the proceedings were terminated and which application is referenced by either a published application, an application open to public inspection or an issued patent.
9. A record from this system of records may be disclosed, as a routine use, to a Federal, State, or local law enforcement agency, if the USPTO becomes aware of a violation or potential violation of law or regulation.

UNITED STATES PATENT AND TRADEMARK OFFICE

Commissioner for Patents
United States Patent and Trademark Office
P.O. Box 1450
Alexandria, VA 22313-1450
www.uspto.gov

BSH HOME APPLIANCES CORPORATION
INTELLECTUAL PROPERTY DEPARTMENT
100 BOSCH BOULEVARD
NEW BERN NC 28562

COPY MAILED

SEP 14 2007

OFFICE OF PETITIONS

In re Application of	:	
Baacke et al.	:	
Application No. 29/259,938	:	ON PETITION
Filed: May 16, 2006	:	
Attorney Docket No. 2005M02401US	:	

This is a decision on the renewed petition under 37 C.F.R. § 1.137(b), filed September 10, 2007, to revive the above-identified application.

The petition is **GRANTED.**

The requisite terminal disclaimer and fee have been received.

This matter is being referred to Technology Center 2900 for further examination on the merits.

Telephone inquiries regarding this decision should be directed to the undersigned at (571) 272-3206.

Liana Walsh
Petitions Examiner
Office of Petitions