UNITED STATES PATENT AND TRADEMARK OFFICE

UNITED STATES DEPARTMENT OF COMMERCE
United States Patent and Trademark Office
Address: COMMISSIONER FOR PATENTS
P.O. Box 1450
Alexandria, Virginia 22313-1450
www.uspto.gov

APPLICATION NO.	FILING OR 371(c) DATE	FIRST NAMED INVENTOR	ATTORNEY DOCKET NO.	CONFIRMATION NO.
60/781,671	03/13/2006	Timothy P. Weihs	RENA 9570US	8547

1688 7590 12/14/2007

EXAMINER

ART UNIT	PAPER NUMBER

DATE MAILED: 12/14/2007

PETITION FOR MODIFICATION OR RESCISSION OF SECRECY ORDER
(35 U.S.C. 181-188)

PETITION NUMBER 13,173

The attached copy of a petition for modification or rescission of the Secrecy Order(s), issued , is forwarded for recommendation by your Office. In order to assure a timely response to the patent applicant on their petition, please respond within **30 DAYS** of the above mail date.

Director, Technology Center 3600
(571) 272-5150

F. Kate Oehne

Enclosures as indicated:

- ☒ Petition
- ☒ Application
- ☐ Exhibit

PATENT

IN THE UNITED STATES PATENT AND TRADEMARK OFFICE

APPLICANT:	Timothy P. Weihs
SERIAL NO.:	60/781,671
FILED:	March 13, 2006
EXAMINER:	
DOCKET NO.:	RENA 9570US
GROUP ART UNIT:	
CONF. NO.:	8547
FOR:	Reactive Composite Material Structures With Electrostatic Discharge Protection and Application Thereof

I hereby certify that this correspondence is being deposited with the U.S. Postal Service as first class mail in an envelope addressed to: Commissioner for Patents, P.O. Box 1450, Mail Stop L&R, Alexandria, VA 22313-1450, on December 12, 2007.

Mark E. Books

Mark E. Books, Reg. No. 40,918

12/12/07

Date of Signature

13173

Commissioner of Patents
Mail Stop L&R
P.O. Box 1450
Alexandria, VA 22313-1450

RECEIVED
DEC 13 2007
LICENSING & REVIEW

December 12, 2007
St. Louis, Missouri

PETITION FOR
RECESSION OF A SECRECY ORDER
UNDER 37 CFR 5.4

Sir:

In response to the imposition of the Secrecy Order under 35 U.S.C. § 181-188 on the above identified case on August 6, 2007, Applicant hereby petitions for a recession of the Secrecy Order pursuant to 37 CFR 5.4 on the grounds that the order is ineffective and futile.

Pursuant to 37 CFR 5.4(c), it is noted that the United States Government has certain rights in this invention pursuant to Award 70NANB3H3045 supported by NIST.

Recession of the Secrecy Order is sought specifically on the grounds that the objected to material present in U.S. Provisional Patent Application 60/781,671, which is the subject of the Secrecy Order in question, has been published and is publically available as is set forth below and shown in the attached Exhibits A-C:

- Information supplied to Applicant's representative by Ms. Dorothy Becker, an attorney for the Department of the Navy, who was responsible for the review and issuance of the Secrecy Order in question, identified the ***only*** objectionable subject matter contained in the instant application to be an incorporation by reference of a related U.S. Provisional Application which is currently subject to a Secrecy Order. The specific reference in question appears only once, on Page 3 of the application, and is to U.S. Provisional Application 60/692,857.
- U.S. Provisional Patent Application 60/692,857 is a priority document to International Application PCT/US2006/024453 which was published on January 4, 2007 as WO 2007/002378.
- As a priority document to this International Application, the provisional application was communicated to the PCT receiving Office on September 4, 2006, as is shown in Exhibit A "PCT Notification Concerning Submission Or Transmittal of Priority Document".
- Priority documents communicated to the PCT receiving Office are publically available for review and download via the World Intellectual Property Organization website at www.wipo.int. Attached Exhibit B shows the specific "Documents" page available for the WO 2007/002378 publication on the WIPO

website, and specifically identifies U.S. Provisional Application 60/692,857 as available to "view" and to "download".

- Selection of the "download" option for U.S. Provisional Application 60/692,857 shown on Exhibit B retrieves a 91-page PDF document containing a complete copy of U.S. Provisional Application 60/692,857, shown in Exhibit C.

Therefore, a complete recession of the Secrecy Order imposed on U.S. Provisional Patent Application 60/781,671 is respectfully requested on the grounds that such Secrecy Order is fully ineffective and futile in view of the prior publication of the objected-to material contained in the present application over 11 months prior the issuance of the Secrecy Order, and continued and current public availability of the objected-to material (in the form of the publication of U.S. Provisional Application 60/692,857) as shown above in Exhibits B and C.

It is further noted that a separate Petition is being concurrently filed for Recession of the Secrecy Order associated with U.S. Provisional Application 60/692,857 on the same grounds.

Respectfully submitted,

Mark E. Books

Mark E. Books, Reg. No. 40,918
Polster, Lieder, Woodruff & Lucchesi, L.C.
12412 Powerscourt Drive, Suite 200
St. Louis, Missouri 63131
Tel: (314) 238-2400
Fax: (314) 238-2401
mbooks@patpro.com

From the INTERNATIONAL BUREAU

PCT

NOTIFICATION CONCERNING SUBMISSION OR TRANSMITTAL OF PRIORITY DOCUMENT

(PCT Administrative Instructions, Section 411)

To:

BOOKS, Glen, E.
POLSTER LIEDER WOODRUFF & LUCCHESI, L.C.
12412 Powerscourt Drive
Suite 200
St. Louis, MO 63131
ETATS-UNIS D'AMERIQUE

Date of mailing *(day/month/year)* 20 October 2006 (20.10.2006)	
Applicant's or agent's file reference RENA 9304WO	**IMPORTANT NOTIFICATION**
International application No. PCT/US2006/024453	International filing date *(day/month/year)* 22 June 2006 (22.06.2006)
International publication date *(day/month/year)* **Not yet published**	Priority date *(day/month/year)* 22 June 2005 (22.06.2005)
Applicant REACTIVE NANOTECHNOLOGIES, INC. et al	

1. By means of this Form, which replaces any previously issued notification concerning submission or transmittal of priority documents, the applicant is hereby notified of the date of receipt by the International Bureau of the priority document(s) relating to all earlier application(s) whose priority is claimed. Unless otherwise indicated by the letters "NR", in the right-hand column or by an asterisk appearing next to a date of receipt, the priority document concerned was submitted or transmitted to the International Bureau in compliance with Rule 17.1(a) or (b).

2. *(If applicable)* The **letters "NR"** appearing in the right-hand column denote **a priority document which, on the date of mailing of this Form, had not yet been received by the International Bureau** under Rule 17.1(a) or (b). Where, under Rule 17.1(a), the priority document must be submitted by the applicant to the receiving Office or the International Bureau, but the applicant fails to submit the priority document within the applicable time limit under that Rule, **the attention of the applicant is directed** to Rule 17.1(c) which provides that no designated Office may disregard the priority claim concerned before giving the applicant an opportunity, upon entry into the national phase, to furnish the priority document within a time limit which is reasonable under the circumstances.

3. *(If applicable)***An asterisk (*)** appearing next to a date of receipt, in the right-hand column, denotes **a priority document submitted or transmitted to the International Bureau but not in compliance with Rule 17.1(a) or (b)** (the priority document was received after the time limit prescribed in Rule 17.1(a) or the request to prepare and transmit the priority document was submitted to the receiving Office after the applicable time limit under Rule 17.1(b)). Even though the priority document was not furnished in compliance with Rule 17.1(a) or (b), the International Bureau will nevertheless transmit a copy of the document to the designated Offices, for their consideration. In case such a copy is not accepted by the designated Office as the priority document, Rule 17.1(c) provides that no designated Office may disregard the priority claim concerned before giving the applicant an opportunity, upon entry into the national phase, to furnish the priority document within a time limit which is reasonable under the circumstances.

Priority date	Priority application No.	Country or regional Office or PCT receiving Office	Date of receipt of priority document
22 June 2005 (22.06.2005)	60/692,857	US	04 September 2006 (04.09.2006)
22 June 2005 (22.06.2005)	60/692,822	US	04 September 2006 (04.09.2006)
28 November 2005 (28.11.2005)	60/740,115	US	04 September 2006 (04.09.2006)

EXHIBIT A

The International Bureau of WIPO 34, chemin des Colombettes 1211 Geneva 20, Switzerland Facsimile No. +41 22 338 82 70	Authorized officer Masashi Honda Facsimile No. +41 22 338 70 10 Telephone No. +41 22 338 82 54

WORLD INTELLECTUAL PROPERTY ORGANIZATION

IP SERVICES

Home IP Services PATENTSCOPE®

Search result: 1 of 1

(WO/2007/002378) METHOD AND APPARATUS FOR ELECTROMAGNETIC EMISSION BY REACTIVE COMPOSITE MATERIALS

Biblio. Data | Description | Claims | National Phase | Notices | Documents

Published International Application

Date	Title		
15.11.2007	Later publication of international search report (A3 46/2007)	view	download
04.01.2007	Initial Publication without ISR (A2 01/2007)	view	download

Related Documents on file at the International Bureau (more information)

Date	Title		
04.01.2007	US 60/692,857 22.06.2005 (Pr. Doc.)	view	download
04.01.2007	US 60/692,822 22.06.2005 (Pr. Doc.)	view	download
04.01.2007	US 60/740,115 28.11.2005 (Pr. Doc.)	view	download
04.01.2007	Notification Concerning Submission or Transmittal of Priority Document (IB304)	view	download

EXHIBIT B

Document made available under the Patent Cooperation Treaty (PCT)

International application number: PCT/US2006/024453

International filing date: 22 June 2006 (22.06.2006)

Document type: Certified copy of priority document

Document details: Country/Office: US
Number: 60/692,857
Filing date: 22 June 2005 (22.06.2005)

Date of receipt at the International Bureau: 04 September 2006 (04.09.2006)

Remark: Priority document submitted or transmitted to the International Bureau in compliance with Rule 17.1(a) or (b)

EXHIBIT
C

World Intellectual Property Organization (WIPO) - Geneva, Switzerland
Organisation Mondiale de la Propriété Intellectuelle (OMPI) - Genève, Suisse

1510430

THE UNITED STATES OF AMERICA

TO ALL TO WHOM THESE PRESENTS SHALL COME:

UNITED STATES DEPARTMENT OF COMMERCE

United States Patent and Trademark Office

August 28, 2006

THIS IS TO CERTIFY THAT ANNEXED HERETO IS A TRUE COPY FROM THE RECORDS OF THE UNITED STATES PATENT AND TRADEMARK OFFICE OF THOSE PAPERS OF THE BELOW IDENTIFIED PATENT APPLICATION THAT MET THE REQUIREMENTS TO BE GRANTED A FILING DATE.

APPLICATION NUMBER: ***60/692,857***
FILING DATE: ***June 22, 2005***
RELATED PCT APPLICATION NUMBER: ***PCT/US06/24453***

THE COUNTRY CODE AND NUMBER OF YOUR PRIORITY APPLICATION, TO BE USED FOR FILING ABROAD UNDER THE PARIS CONVENTION, IS ***US60/692,857***

UNITED STATES PATENT AND TRADEMARK OFFICE
DEPARTMENT OF COMMERCE

Certified by

Under Secretary of Commerce
for Intellectual Property
and Director of the United States
Patent and Trademark Office

22764 U.S. PTO
062205

Attorney Docket No.: RENA 9304US

113264 U.S. PTO
60/692857
062205

PROVISIONAL APPLICATION FOR PATENT COVER SHEET

This is a request for filing a PROVISIONAL APPLICATION under 37 CFR 1.53(b)(2).

Express Mail Label Number: EV 609094253 US

INVENTOR(s)/APPLICANT(s)

LAST NAME	FIRST NAME	MIDDLE INITIAL	RESIDENCE (CITY AND EITHER STATE OR FOREIGN COUNTRY
Weihs	Timothy	P.	Baltimore, Maryland
Choi	Michael		McLean, Virginia
Valliappan	Somasundaram		Cockeysville, Maryland
Besnoin	Etienne		Baltimore, Maryland
Heian	Ellen	M.	Cockeysville, Maryland
Knio	Omar		Timonium, Maryland
Van Heerden	David		Baltimore, Maryland

TITLE OF THE INVENTION (500 characters max)

APPLICATIONS OF REACTIVE COMPOSITE STRUCTURES

DIRECT ALL CORRESPONDENCE TO:

CUSTOMER NUMBER 001688

ENCLOSED APPLICATION PARTS (check all that apply)

Specification	Number of Pages	65
Drawings	Number of Sheets	20
Other	Specify	

Application Size Fee: If the specification and drawings exceed 100 sheets of paper, the application size fee is $250 ($125 for small entity) for each additional 50 sheets or fraction thereof.

[☒] Applicant Claims Small Entity Status

METHOD OF PAYMENT

A check or money order in the amount of:

[☐] $200.00 for large entity
[☒] $100.00 for small entity

is enclosed to cover the Provisional filing fees.

The Commissioner is hereby authorized to charge any additional fees or credit overpayment under 37 CFR 1.16 and 1.17 that may be required by this paper to Deposit Account 162201.

The invention was made by an agency of the United States Government or under a contract with an agency of the United States Government.

☐ No
☒ Yes, the name of the Government Agency and the Government Contract Number are:

Award 70NANB3H3045 supported by NIST through its Advanced Technology Program

---

Respectfully submitted,

Glen E. Books Date: 6/22/05

Glen E. Books, Reg. No. 24,950

POLSTER, LIEDER, WOODRUFF & LUCCHESI, L.C.
12412 Powerscourt Drive, Suite 200
St. Louis, Missouri 63131-3615
Telephone: (314) 238-2400
Facsimile: (314) 238-2401

Express Mail No. EV 609094253 US

22764 U.S. PTO
062205

EXPRESS MAIL FILING CERTIFICATE

RE: U.S. Provisional Patent Application
TITLE: APPLICATIONS OF REACTIVE COMPOSITE STRUCTURES
INVENTORS: Weihs et al.

I hereby certify that this U.S. Patent Application is being deposited with the United States Postal Service utilizing the "Express Mail Post Office to Addressee" service addressed to, Commissioner for Patents PO Box 1450, Alexandria, VA 22313-1450 on June 22, 2005.

Glen E. Books

Glen E. Books, Reg. No. 24,950

6/22/05

Date of Signature

Express Mail Label No. EV609094253US

SPECIFICATION

To All Whom It May Concern:

Be It Known That We, Timothy P. Weihs, Michael Choi, Somasundaram Valliappan, Etienne Besnoin, Ellen M. Heian, Omar Knio, and David van Heerden, citizens of the United States of America, the United States of America, India, France, the United States of America, the United States of America, and South Africa, respectively, whose post office addresses are Baltimore, Maryland; McLean, Virginia; Cockeysville, Maryland; Baltimore, Maryland; Cockeysville, Maryland; Timonium, Maryland; and Baltimore, Maryland, respectively, have invented new and useful improvements in:

APPLICATIONS OF REACTIVE COMPOSITE STRUCTURES

Express Mail No.: EV 609094253 US
RENA 9304US

CROSS-REFERENCE TO RELATED APPLICATIONS

[0001] This application is a continuation-in-part of U.S. patent application S.N. 10/247,998 filed by T. Weihs et al. on September 4, 2003, ("Methods of Making and Using Freestanding Reactive Multilayer Foils"). The '998 application, in turn, is a continuation-in-part of three U.S. patent applications: 1) U.S. application S.N. 09/846,486 filed by T. Weihs et al. on May 1, 2001 ("Freestanding Reactive Multilayer Foils"); 2) U.S. application S.N. 09/846,422 filed by T. Weihs et al. on May 1, 2001 ("Reactive Multilayer Structures for Ease of Processing and Enhanced Ductility") and 3) U.S. application S.N. 09/846,447 filed by T. Weihs et al. on May 1, 2001 ("Method of Making Reactive Multilayer Foil and Resulting Product"). The above '486 application, '422 application and '447 application each claims the benefit of U.S. provisional application S.N. 60/201,292 filed by T. Weihs et al. on May 2, 2000 ("Reactive Multilayer Foils"). Each of the above applications ('998, '486, '422, '447 and '292) is incorporated herein by reference.

[0002] This application is also a continuation-in-part of U.S. application S.N. 10/814,243 filed by T. P. Weihs et al. on April 1, 2004 ("Hermetically Sealed Product and Related Methods of Manufacture") which, in turn, claims the benefit of S.N. 60/461,196 filed April 9, 2003.

[0003] This application is further a continuation-in-part of U.S. application S.N. 10/959,502 filed by T. P. Weihs et al. on October 7, 2004 ("Methods of Controlling Multilayer Foil Ignition") which claims the benefit of S.N. 60/509,526 filed October 9, 2003.

[0004] This application is also a continuation-in-part of U.S. application S.N. 10/976,877 filed by T. P. Weihs et al. on November 1, 2004 ("Methods and Device for Controlling Pressure in Reactive Multilayer Joining and Resulting Product") which, in turn, claims the benefit of 60/516,775 filed November 4, 2003.

[0005] And this application is further a continuation-in-part of U.S. application S.N. 10/843,352 ("Method of Controlling Thermal Waves in Reactive Multilayer Joining and Resulting Product") filed May 12, 2004 which claims the benefit of 60/469,841 filed May 13, 2003. Each of the aforementioned '243, '196, '502, '526, '877, '775, '352 and '841 applications are incorporated herein by reference.

[0006] This application incorporates by reference copending U.S. Serial No. _____ filed concurrently herewith by Yuwei Xun et al. and entitled "Methods of Making Reactive Composite Structures, Resulting Products and Applications Thereof" and identified by Attorney Docket No. RENA 9284US.

STATEMENT REGARDING FEDERALLY SPONSORED RESEARCH

[0007] The United States Government has certain rights in this invention pursuant to Award 70NANB3H3045 supported by NIST through its Advanced Technology Program.

FIELD OF THE INVENTION

[0008] This invention relates to reactive composite structures. In particular, it concerns methods for using such structures in a variety of new or improved applications.

BACKGROUND OF THE INVENTION

[0009] Reactive composite structures are useful in a wide variety of applications requiring the generation of intense, controlled amounts of heat or light quickly or from a localized region. Such composite structures are typically comprised of two or more

phases of materials, spaced in a controlled fashion throughout a composite in uniform layers, local layers, islands, or particles that, upon appropriate excitation, undergo an exothermic chemical reaction that spreads rapidly through the composite structure generating heat and light. Such structures can be used as sources of heat for joining bodies together, as by welding, soldering or brazing, and they can be used in other applications requiring controlled local generation of heat or light, such as propulsion, ignition, and illumination.

BRIEF SUMMARY OF THE INVENTION

[0010] Applicants have discovered and developed a variety of ways of making reactive composite structures and methods of controlling the properties and characteristics of the structures that are pertinent to numerous new or improved applications. This patent application is directed to new or improved applications of reactive composite structures.

BRIEF DESCRIPTION OF THE SEVERAL VIEWS OF THE DRAWINGS

[0011] The nature, beneficial features and applications of the invention will be apparent from consideration of the features and embodiments of the invention illustrated in the accompanying drawings. In the drawings:

[0012] Figure 1 illustrates an exemplary reactive composite structure during reaction;

[0013] Fig. 2 illustrates use of a reactive composite structure in a joining application;

[0014] Fig. 3 illustrates the use of reactive composite structure as an energy source in a solid oxide fuel cell;

[0015] Fig. 4 shows the curing of polymers with reactive composite structure;

[0016] Fig. 5 illustrates the ignition of propellant with reactive composite structure;

[0017] Fig. 6 shows the ignition of a thermite reaction with reactive composite structure;

[0018] Fig. 7 illustrates the use of reactive composite structures as an infrared flash to take photographs in the dark;

[0019] Fig. 8 shows reactive composite structures emitting a temporarily blinding flash;

[0020] Fig. 9 illustrates the use of a reactive composite structure as a fuse;

[0021] Fig. 10 shows reactive composite structure used to break a circuit in the case of high current surges in conjunction with a conventional fuse to break the circuit for low to moderate power surges. The reactive composite structure is heat sunk to protect against aging;

[0022] Fig. 11 illustrates reactive composite structure used with a conventional fuse to break a circuit rapidly.

[0023] Figs. 12(a) and 12(b) show reactive composite structures as a source for controlled propulsion. The reactive composite structures can be designed to be solid or vapor after reaction;

[0024] Figs. 13(a) and 13(b) illustrate reactive composite structures as a source for a controlled explosive effect. The reactive composite structure product can be controlled to be a solid or vapor after reaction;

[0025] Figs. 14(a) and 14(b) show the use of reactive composite structure on a key to make a lock nonfunctional;

[0026] Fig. 15 illustrates a reactive composite structure used to destroy data on a microchip or card upon ignition;

[0027] Figs. 16(a) and 16(b) show the use of reactive composite structures to separate components;

[0028] Figs. 17(a) and 17(b) illustrate splitting components with (a) a nut made with reactive composite structure and (b) a nut with reactive composite structure layers within it;

[0029] Fig. 18 shows use of reactive composite structure as an indicator to signal aging in a thermal battery;

[0030] Fig. 19 illustrates the use of a reactive composite structure indicator for radiation;

[0031] Fig. 20 illustrates reactive composite structures used as case materials for various parts of a missile; and

[0032] Fig. 21 shows how reactive composite structures can be used as frame and case materials for a drone aircraft.

[0033] It is to be understood that these drawings are for the purpose of illustrating the concepts of the invention and are not to scale.

.DETAILED DESCRIPTION OF THE PREFERRED EMBODIMENT

[0034] This description is divided into three parts. Part I describes the nature of reactive composite structures and ways of making them. Part II describes beneficial features of composite structures and methods for tailoring those features for particular applications; and Part III provides illustrative uses of reactive composite structures in a variety of applications.

I. <u>The Nature of Reactive Composite Structures and Ways of Making Them</u>

[0035] The external geometries of reactive composite structures can be in any one of a variety of forms including composite foils, composite wires, composite rods and composite bulk form bodies. Referring to the drawings, Fig. 1 illustrates a reactive composite foil 14 composed of alternating phases or layers 16 and 18 of materials A

and B, respectively, that can exothermically react. These alternating layers 16 and 18 can be any materials amenable to mixing of neighboring atoms (or having changes in chemical bonding) in response to a stimulus. The materials A/B can, for example, be those that react to form silicides (Rh/Si; Ni/Si, Zr/Si), aluminides (Ni/Al, Ti/Al, Monel/Al, Zr/Al), borides (Ti/B), carbides (Ti/C); they can be thermite reacting compounds (e.g. Al/Fe_2O_3, Al/Cu_2O); they can be reduction-formation reacting compounds (e.g. Ti/B_4C, Zr/CaB_6, Hf/WC); or they can be reduction-nitridation reacting compounds (e.g. Ti/Ni_3N, Zr/BN, or Hf/WN).

[0036] The materials (A/B) used in the fabrication of the reactive foil are preferably chemically distinct. In advantageous embodiments they alternate between a transition metal (e.g. Ti, Ni) and a light element (e.g. B, Al). Preferably, the pairs (A/B) of elements are chosen to form stable reaction products with large negative heats of formation and high adiabatic reaction temperatures.

[0037] The notable property of composite structures is that upon ignition they react in a self-propagating fashion to rapidly produce intense heat and light. They can also be designed and tailored to react more slowly, producing heat and light over a longer period of time. When a composite foil 14 is exposed to a stimulus (e.g. a spark or energy pulse at one end), neighboring atoms from materials A and B mix (as shown in region 30). The change in chemical bonding caused by this mixing results in reduction of the atomic bond energy, thus generating heat in an exothermic chemical reaction. This change in chemical bonding occurs as layers with A-A bonds (i.e. layer 16) and layers with B-B bonds (layer 18) exchange to A-B bonds, thereby reducing the chemical energy stored in each layer and generating heat.

[0038] Fig. 1 further illustrates that the generated heat diffuses through foil 14 from reacted section 30 through reaction zone 32 to unreacted section 34 and initiates additional mixing of the unreacted layers. As a result, a self-sustaining, self-propagating reaction is produced through foil 14. With sufficiently large and rapid heat generation, the reaction propagates across the entire foil 14 at velocities typically greater than 0.1 m/s. As the reaction does not require additional atoms from the surrounding environment (e.g. it does not require environmental oxygen), the reaction makes foil 14 a self-contained source of energy capable of rapidly emitting bursts of heat and light, reaching temperatures above 1300K and a local heating rate reaching above 10^6 K/s. This energy is particularly useful in applications requiring production of heat rapidly and locally.

[0039] A typical application is joining bodies together. In Fig. 2, a reactive composite foil is used to join bulk materials 10 together. The foil 14 can be in the form of a freestanding sheet. The foil can be positioned between sheets 12 of joining material such as solder or braze to form a sandwich-like structure. The reactive foil sandwich is positioned between bulk materials 10 between the surfaces at which the materials 10 are to be joined, and the components are pressed together as by vise 11.

[0040] Once the components of the joining process are pressed together, a stimulus (shown as a lighted match 15) is applied to an end of the reactive foil 14 to initiate a self-propagating reaction. The intermixing of atoms within the foil 14 produces rapid and intense heat sufficient to melt the joining materials 12 along the entire area of the reactive foil 14. Shortly thereafter, the joined materials 10 return to environmental temperature, and pressure can be removed from the materials that are now joined.

[0041] Reactive composite wires and rods have analogous structures and properties. The wires and rods typically comprise concentric alternating layers or phases of reactive composite structures A/B, and upon stimulus at one end, they undergo a self-propagating reaction rapidly propagating from one end along their length to the other end. Reactive composite wires can support tension in their longitudinal dimension, rods can provide rigidity and foils can resist tension in two dimensions, as well as providing impermeable area coverage. Meshes can be formed by punching or interweaving foils or interweaving wires. See the concurrently filed provisional application entitled " incorporated herein by reference.

[0042] Applicants have developed methods of fabricating reactive composite structures. Reactive composite foils have been made by vapor deposition, deformation of jacketed composite assemblies and cold rolling of assembled layers or phases. Freestanding foils have been made by physical vapor deposition of alternating layers under conditions of low stress. For further details see T. P. Weihs et al., United States Patent No. 6,736,942 issued May 18, 2004 ("Freestanding Reactive Multilayer Foils") which is incorporated herein by reference. An alternative approach is to dispose a composite (layered or particulate) assembly in a metal jacket, deform and flatten the jacketed assembly and remove the jacket. For further details see T. P. Weihs et al., U.S. Patent No. 6,534,194 issued March 18, 2003, which is incorporated herein by reference. Yet a third approach is to repeatedly deform a composite assembly slowly under high pressure.

[0043] Reactive composite wires and rods can be made by forming cylindrical assemblies of layers or phases, disposing the cylindrical assemblies in a cylindrical jacket and deforming and drawing the wires or rods.

II. Beneficial Features of Reactive Composite Structures and Methods for Tailoring Them

[0044] Applicants have recognized that there are features and characteristics of reactive composite structures that are advantageous for particular applications. It has further been recognized that these beneficial features can be tailored to benefit specific applications. The salient beneficial features and characteristics can be roughly categorized as those relating to A. Ignition, stability, storage, environmental compatibility, and safety of the structures; B. Physical properties of the structures; C. Reaction properties; D. Phase and geometry and E. the autonomous nature of the structures. We discuss these features and their tailoring in the order presented.

A. Ignition, Stability, Storage, Environmental Compatibility, and Safety:

1. Controllable ignition of reactive composite structures

a. Multiple methods can be used to ignite reactive composite structures. For details, see the aforementioned U.S. Application S.N. 10/959,502. These include but are not limited to electric current, electric spark, thermal pulse, flame, and mechanical impact. All of these methods involve providing a pulse of energy to the reactive composite structure. The large variety of methods provides flexibility when designing reactive composite structures for a given application.

b. The power density and energy density of the energy pulse that is required to ignite reactive composite structures can be controlled as described in S.N. 10/959,502. This control provides flexibility when designing these materials for a given application. Reactive composite structures can be tailored to be more or less sensitive to ignition.

2. Stability, storage requirements, environmental compatibility, and safety

a. The stability of reactive composite structures and their storage requirements can be controlled by varying design parameters for the structures. This provides flexibility when manufacturing, storing, or designing these structures for a given application.

b. An example of a benefit includes the ability to stabilize reactive composite structures to the point where they can be cut, punched, drilled, rolled, drawn and bent without unwanted ignition. This enables the use of many fabrication methods when manufacturing the structures in bulk or in foil form and when shaping them into final geometries for given applications.

c. Another example of a benefit is the ability to design these structures so that they can be stored or held at high temperatures, as high as 150C or 200C for many days or years without degradation.

d. Another example of a benefit is the ability to design these structures so that they are insensitive to ignition by electrostatic discharge or ESD.

e. Another example of a benefit of these reactive composite structures is the ability to design their exteriors to prevent corrosion, oxidation, or discoloration in many wet and dry environments.

f. Another example of a benefit of these reactive composite structures is the ability to choose materials that are more non-toxic or environmentally benign both before, during and after reaction than many energetic materials.

g. Yet another benefit of these reactive composite structures is that they can be designed to be safer to manufacture, to handle, to machine, to package and to ship than many energetic materials because they are both more stable and less reactive with environments than many other flammable solids and most explosive materials. Reactive composite structures are classified as 4.1 flammable solids.

3. Designing and Tailoring Ignition, Stability, Storage, Environmental Compatibility, and Safety

a. The requirements for igniting reactive composite structures (energy density and power density) and the stability of reactive composite structures can be raised or lowered by varying design parameters for the reactive composite structures. For example, one can increase ignition requirements and therefore stability by increasing reactant spacing, layer thickness or particle size, by increasing intermixing between reactants, layers or particles, by adding inert outer or inner layers or phases, and by choosing reactant material systems with high activation energies for their intermixing reactions.

b. The same parameters that increase ignition requirements and stability also broaden the storage requirements for reactive composite structures and enhance their safety. For example, one can raise a reactive composite structure's storage requirements (time at a given maximum temperature) and improve the safety in

handling that material during manufacturing, packaging, and shipping by increasing reactant spacing, layer thickness or particle size, by increasing intermixing between reactants, layers or particles, by adding inert outer or inner layers or phases, and by choosing reactant material systems with high activation energies for their intermixing reactions.

c. In a similar fashion one can control a reactive composite structure's resistance to electrostatic discharge (ESD) by increasing reactant spacing, layer thickness or particle size, by increasing intermixing between reactants, layers or particles, by adding inert outer or inner layers or phases, and by choosing reactant material systems with high activation energies for their intermixing reactions.

d. One can control the stability of a reactive composite structure's appearance (corrosion, discoloring, etc) by coating that reactive composite structure with a chemically and environmentally stable outer layer. Examples would include but are not limited to aluminum, stainless steel, gold, and certain polymers.

e. One can control the toxicity and environmental compatibility of a reactive composite structure by choosing reactant material systems that are initially non-toxic and/or react to produce non-toxic products.

B. <u>Physical Properties - Before Reaction, After Reaction, and Change from Before to After Reaction:</u>

[0045] The following describes physical properties of reactive composite structures that can be varied through design and manufacturing. The properties can be designed and manufactured to be homogeneous throughout the material or they

can be designed and manufactured to vary through the thickness or along the length of the material. In addition, the properties can be designed and manufactured to be isotropic (uniform in all directions) or anisotropic (vary from one direction to another). Lastly, these properties can be designed to achieve an average or effective value within the reactive composite structure before, during, and/or after its reaction, as well as a change in one or more of these properties from before to after its reaction.

[0046] **1. Thermal Properties**

a. Thermal conductivity can be varied from 5 to 400 W/m-K

b. Heat capacity can be varied from 0.1 to 1.0 J/g-K

c. Coefficient of Thermal Expansion (CTE) can be varied from 1um/m-K to 23 um/m-K

d. Effective melting temperature can be varied from 400K to 3000K

[0047] **2. Electrical and Magnetic Properties**

a. Electrical conductivity can be varied from 10^{8} to 10^{-20} $\Omega^{-1}m^{-1}$

b. Relative maximum magnetic permeability can be varied from 0 to 10^{4}

[0048] **3. Optical and Surface Properties**

a. The surface can be varied from reflective to antireflective for visible light

b. Surface topography can be varied from smooth to rough

c. Surface color can be varied across the color spectrum

d. Substrate backings or external coatings can be applied that enhance insulation, absorption, reflection, etc.

[0049] **4. Mechanical Properties**

a. Density can be varied from 1 to 18 g/cc

b. Strength can be varied. For example yield strength can range from 1 MPa to 1000MPa

c. Elastic stiffness can be varied. For example Young's Modulus can range from 1GPa to 1000GPa

d. Fracture toughness can be varied. For example Mode I fracture toughness can range from 1MPa-m$^{0.5}$ to 100MPa-m$^{0.5}$

e. Ductility can be varied. For example tensile ductility can range from 0.1% to 100%

f. Deformability can be varied. Products can be plastically processed (extruded, bent, etc.) into final shape and this ability can be varied.

[0050] **5. Variation of Physical Properties**

The ability to vary the physical properties of reactive composite structures is very advantageous in the application of reactive composite structures. A partial list of benefits that are gained by this ability is given below:

a. **Release and transfer of energy generated by the reactive composite structure:** The main function of the reactive composite structure is to release and transfer energy that it generates to some environment or neighboring component. That energy is typically in the form of thermal energy or optical energy. The rate at which these energies are released will depend strongly on the thermal properties as well as the emissivities of the materials in the reactive structure. For example, higher values for both will enable faster release and transfer of energy out of the reactive composite

structures once they react. Higher releases of energy can speed the rate at which the desired function of the reactive composite structure is accomplished. Examples would include the release of thermal energy from a reactive composite structure designed to act as an ignition source, as an energy source, or as a security device, and the release of optical energy (light) to provide an optical signal or to illuminate an area. Being able to tailor the rate at which energy is released and transferred from a reactive composite structure is very advantageous.

b. **Transfer (absorption, movement and release) of external energies, fields or forces before, during and after reaction:** There are many applications of reactive composite structures in which they provide another function, besides releasing energy when they react. They may need to absorb thermal energy, electric energy, magnetic energy, optical energy, or mechanical energy from external sources; they may need to transport thermal energy, electric energy, magnetic energy, optical energy, or mechanical energy from external sources across their geometries; and they may need to release to a neighboring component or the surrounding environment thermal energy, electric energy, magnetic energy, optical energy, or mechanical energy that was absorbed from external sources, either prior to reaction, during reaction, or after reaction.

Almost all reactive composite structures will need to absorb energy from an external source, at least in a small volume, in order to be ignited and thereby react either partially or completely. The more readily that the reactive

composite structures absorb heat, electrical current, magnetic fields, light, or mechanical energy, the more easily they can be ignited. The converse is also true. The application of reactive composite structures as sensors is another good example in which they must absorb thermal energy, electric or magnetic fields, optical energy, or mechanical energy. Thus, by tailoring the physical properties of the reactive composite structures, absorption of energy, and hence ignition and sensing, can be designed to be more or less difficult.

In a similar manner, many reactive composite structures will need to transfer energy or fields across their volumes before, during or after their reaction. For example, in the interrupter applications described hereinbelow, the reactive composite structure may need to transfer electrical current or magnetic fields prior to reaction but not after reaction. Thus, electrical conductivity or magnetic permeability of the reactive composite structure will need to be sufficient in order to accomplish this transfer. Debonding (breaking things apart) and structural energetics are examples of two applications in which mechanical forces or loads will need to be supported and transferred across the reactive composite structures. Thus, strength and stiffness will need to be above a critical value for a given application. In all four examples the ability to tailor the transfer of energies or forces can be very beneficial.

Finally, many external fields, energies or forces that are absorbed from an external source and transferred across reactive composite structures also need to be released to a neighboring environment or component. The two

above sets of examples can be used again. For the interrupter application, electrical currents or magnetic fields need to be transferred to a neighboring component, and for the debonding and structural energetic applications, forces need to be released or transferred to neighboring components. Being able to tailor physical properties of the reactive composite structures improves the designer's ability to enable effective release rates of externally applied fields, energies or forces.

c. **Absorption of gases or liquids (before, during or after reaction):** the absorption of gases or liquids into a reactive composite structure before, during or after reaction, can prove beneficial in some cases and detrimental in other cases. In the case of sensing, the ability to absorb gas or liquid into a porous reactive composite structure could enhance the absorption of thermal energy by the reactive composite structure, which in turn could lead to a more sensitive or rapid sensor. The surface area absorbing the thermal signal is effectively increased for a given volume. In the case of propulsion, the ability to absorb gas or liquid into a porous reactive composite structure could enhance the propulsion that is generated on ignition of a reaction within the reactive composite structure by rapid heating of a larger volume of gas. Thus, the ability to tailor how much gas or liquid is absorbed by a given reactive composite structure is beneficial.

In many other applications, though, the absorption of gases or liquids simply degrades the performance of the reactive composite structure because the gas or liquid absorbs energy produced by the reactive composite

structures. In ignition, energy source, or security applications, this absorption of energy from the reactive composite will lower the thermal energy available for the given application. Thus, the ability to eliminate the absorption of gas or liquid into the reactive composite structure, and make it effectively gasproof and waterproof is beneficial.

d. **Change of surface properties and color:** the exothermic reaction within a reactive composite structure can be designed to change its surface properties and color. Reflectivity, roughness, emissivity, and color can all be changed through the oxidation of the outer surface, through a chemical change of the outer surface, and through a roughening of the outer surface of the reactive composite structure during its reaction. For example, if the outer layer of an Al-Ni reactive composite structure is Al, then its properties will change as it reacts with the neighboring Ni layer towards the interior. The final Al-Ni composition of the outer layer will have different emissivity, reflectivity, and color. The roughness can also be increased through the oscillatory propagation of the exothermic reactions. An outer coating can also be applied to the reactive composite structure that will maximize or minimize these changes upon reaction. The outer coating or the reactive composite structure itself can also be designed to have the degree of its surface color change be dependent on the environment in which the reactive composite structure reacts. For example, a Cu coating will turn from copper orange to green with an oxygen-containing environment but will remain orange in a vacuum.

[0051] **6. Designing and Tailoring Physical Properties**

Typically, the physical properties of reactive composite structures will be a volume average of the reactants. Thus, by varying the volume fraction of any one reactant or by varying which reactants are incorporated, the physical properties of a reactive composite structure can be altered significantly. For example, the combination of 50 atomic % Al and 50 atomic % Ni produces a reactive composite structure with a relatively high thermal conductivity, electrical conductivity, and magnetic permeability, a moderately reflective surface, and a moderate strength and stiffness. By decreasing the percentage of Al and increasing the percentage of Ni, the reactive composite structure's thermal and electrical conductivity will decrease significantly due to the lower conductivity of Ni compared to Al. Its magnetic permeability will increase due to the magnetic nature of Ni and the nonmagnetic nature of Al, and its strength, stiffness, and density will increase due to the stronger, stiffer, and denser nature of Ni compared to Al. The material's reflectivity may also increase if more Ni is exposed at the reactive composite structure's surface.

In another example, if Ti is substituted for Al above, the thermal and electrical conductivity would decrease due to the lower conductivities of Ti compared to Al; the magnetic permeability would be unchanged since both are nonmagnetic; and its strength, stiffness, and density would increase due to the stronger, stiffer, and denser nature of Ti compared to Al.

One can also achieve variations in physical properties of reactive composite structures by varying the composition of one of the reactants. Thermal, electrical,

magnetic, and mechanical properties of elements are very sensitive to small inclusions of other elements (alloying elements). For example, the thermal and electrical properties of Al are very sensitive to alloying while its mechanical properties are only moderately sensitive. In addition, the magnetic properties of Ni, Co, and Fe are very sensitive to alloying and can be made nonmagnetic with the addition of moderate percentages of other elements (up to 30%).

The average physical properties of reactive composite structures can be varied for a given reactive composite structure as described above. These same methodologies can also be used to vary the physical properties of reactive composite structures across their thickness or along their length or width. Again, the physical properties are varied by changing the volume fraction of a given set of reactants or by changing the reactants (substituting one for another or simply adding a third or fourth) as one move across a thickness or along a length.

Given the reactants within a reactive composite structure can have very different physical properties, the average physical properties of a reactive composite structure can be very anisotropic, particularly for layered or locally layered reactive composite structures. For example, in the case of a layered Al/Ni reactive composite structure, thermal and electrical conductive will be higher along the layers than across the layers because the thermal and electrical conductivity of Al is greater than Ni. The anisotropy will be even stronger when the materials have greater differences in properties such as the case of Al and NiO_X. Here, the thermal and electrical conductivities will be dramatically different

along the layers as opposed to across the layers because the thermal and electrical conductivities of Al are far greater than the conductivities of NiO_X.

Lastly, the mechanical properties of reactive composite structures can also be varied by simply changing the thickness or the diameters of the reactant layers or particles. (Note: in this case there is no change in the volume percentage of reactants.) A reactive composite structure's strength will decrease and its fracture toughness will increase when thicker layers or larger particles of reactants are used. Significant variations in strength and toughness can be achieved by varying dimensions of spacings, layers, or particles from 1nm to 50μm. The reactive composite structure's stiffness and density, though, will not change significantly.

C. Reaction Properties (velocity, temperature, and heat) and Emissions (heat, light, particles, vapor, sound):

[0052] The characteristics of a reactive composite structure's exothermic reaction, both its properties and its emissions, are central to its performance as an energetic material. How quickly a reaction propagates, its heating rate, its maximum temperature, its temperature decay, and the total heat it contains are critical properties that define how effectively it will perform for a given application. Similarly, the emissions from a reacting composite structure, such as heat, light, particles, vapor and sound, are also critical to defining how effectively it will perform for a given application. Consider the following examples:

1) Examples:

a) Ignition of other reactions: to ignite a reaction in another component or material, a reactive composite structure must transfer some of its stored energy to that neighboring component or material. The rate and efficiency of that transfer will be determined by the properties of the reactive composite structure's reaction as well as by what it emits. Being able to tailor these properties and emissions can dramatically improve the performance of the reactive composite structure as an igniter.

i) Reaction velocity – the velocity of the exothermic reaction within the reactive composite structure determines the rate at which the area of the component being ignited is heated.

ii) Reaction temperature and heating rate – the faster the rise and the higher the rise of the reactive composite structure's temperature, the more effectively it will transfer thermal energy and optical energy to a neighboring component that needs to be ignited.

iii) Reaction heat – the higher the chemical energy density (J/g) that is stored within the reactive composite structure, the higher its maximum temperature and the larger the total heat it can transfer to a neighboring component. The larger the volume of the reactive composite structure, the larger the total heat available for transfer, but the maximum temperature will not change significantly.

iv) Light, particles and vapor – the higher the reactive composite structure's emissivity, the more light it will emit for a given reaction temperature and the better its transfer of optical energy to a neighboring component. Being able

to emit hot particles and a hot vapor can also dramatically speed the transfer of energy from the reactive composite structure to a neighboring component that needs to be ignited.

b) Energy Source: to supply energy to another component or material, a reactive composite structure must transfer its stored chemical energy to that neighboring component or material. The rate and efficiency of that transfer will be determined by the properties of the reactive composite structure's reaction as well as by what it emits. Being able to tailor these properties and emissions can dramatically improve the performance of the reactive composite structure as an energy source.

i) Reaction velocity – the velocity of the exothermic reaction within the reactive composite structure determines the rate at which the area of the component is receiving energy. Many applications require transfer of energy over a large area uniformly so the reaction within the reactive composite structure must spread quickly to enable uniformity.

ii) Reaction temperature and heating rate – the faster the rise and the higher the rise of the reactive composite structure's temperature, the more effectively it will transfer thermal and optical energy to a neighboring component that needs energy.

iii) Reaction heat – the higher the chemical energy density (J/g) within the reactive composite structure, the higher its maximum temperature and the larger the total heat it can transfer to a neighboring component. The larger the volume of the reactive composite structure, the larger the total heat

available for transfer, but the maximum temperature and thus the transfer rate will not change significantly.

iv) Light, particles and vapor – the higher the reactive composite structure's emissivity, the more light it will emit for a given reaction temperature and the better its transfer of optical energy to a neighboring component. Being able to emit hot particles and a hot vapor can also dramatically speed the transfer of energy from the reactive composite structure to a neighboring component that needs energy.

c) Interrupter: to act as an interrupter and break the flow of electricity, or some other signal or flow, a reactive composite structure must either break itself apart or cause some other component to break apart. This breaking can occur by multiple processes; two of the more common examples include melting and fracture. To melt either the reactive composite structure itself or a neighboring component that carries the signal, the structure's or component's effective melting temperature must be reached through the release and/or transfer of energy. Similarly, to fracture either the reactive composite structure itself or a neighboring component that carries the signal, the structure's or component's effective fracture toughness must be reached through the generation or transfer of mechanical loads and stresses. These mechanical loads and stresses may be generated by nonuniform heating of one side or one part of the reactive composite structure or a neighboring component. For example, if one side or one end of a strip of reactive composite structure, or a neighboring component, is heated rapidly, its desired thermal expansion will be inhibited by the other side

or end that has not yet been heated. This difference will lead to large stresses with the heated side or end being in compression and the unheated side or end being in tension. These stresses alone can cause fracture. Alternatively, the bending moment and bending stresses that the compressive and tensile regions introduce could also cause fracture of the reactive composite structure or the neighboring component. The stresses and loads introduced by nonuniform heating are often referred to as thermal stresses.

Another variant of this loading is to uniformly heat a reactive foil or component that has a difference in its coefficient of thermal expansion (CTE), either across itself or between it and a neighboring component. The difference in thermal expansion will lead to thermal stresses and loads even for the case of uniform heating. The rate and efficiency with which a reactive composite structure can generate and transfer its stored energy to either heat or mechanically load itself or a neighboring component or material will be determined by its reaction properties as well as by what it emits. Being able to tailor these reaction properties and emissions can dramatically improve the performance of the reactive composite structure as an interrupter.

Another cause of fracture in the reactive composite structure is the shrinkage that occurs during the chemical reaction. The products of the reaction are usually higher in density than the reactants. Thus, as the products form, the reactive structure draws together, shrinking where possible, cracking where constrained. This shrinking and cracking process of a reactive composite structure can be

used to interrupt a signal either directly by fracturing the reactive composite structure or by fracturing a neighboring component that carries the signal.

i) Reaction velocity – the velocity of the exothermic reaction within the reactive composite structure determines the rate at which the area of the component is receiving energy and therefore is being heated or loaded mechanically. Many interrupter applications require rapid melting or fracturing, and thus rapid heating or loading, over a large area. Thus, the reaction within the reactive composite structure must spread quickly.

ii) Reaction temperature and heating rate – the faster the rise and the higher the rise of the reactive composite structure's temperature, the more effectively it will transfer thermal energy or mechanical loads to a neighboring component that needs to melt or fracture.

iii) Reaction heat – the higher the chemical energy density (J/g) within the reactive composite structure, the higher its maximum temperature and the larger the total heat it can transfer to a neighboring component. The larger the volume of the reactive composite structure, the larger the total heat available for transfer, although the maximum temperature will not change. In addition, the change in density from reactants to products tends to scale with reaction heat. The higher the heat of reaction, the great the density change.

iv) Light, particles vapor and odor– the higher the reactive composite structure's emissivity, the more light it will emit for a given reaction temperature and the better the transfer of optical energy to a neighboring component that needs to melt or be loaded mechanically by thermal stresses. Being able to emit hot

particles and a hot vapor can also dramatically speed the transfer of energy from the reactive composite structure to a neighboring component that needs energy for melting or mechanical loading. In addition, the hot particles and vapor can also apply a pressure directly to the reactive composite structure or a neighboring component that will cause it to fracture. Lastly, emitting a strong odor can prove to be an effective signal or deterrent.

[0053] **2. Designing and Tailoring Reaction Properties**

The reaction properties of reactive composite structures and their emissions can be tailored by varying the volume fraction of reactants, the type of reactants, the spacing of reactants, the volume of reactants, internal structure of the reactive composite structures, and the coatings applied to the surface of the reactive composite structures. Details are provided for each reaction property (velocity, temperature, and heat) and each reaction emission (heat, light, particles, vapor, and sound):

a. Reaction Velocity: the velocity of a self-propagating reaction is determined by the rate at which the chemical reaction occurs within a reactive composite structure and the rate at which the resulting thermal energy is transferred into unreacted regions of the reactive composite structure. The rate at which the chemical reaction occurs is determined mainly by properties such as the heat of reaction, the temperature of reaction, the rate of atomic interdiffusion, the spacing of reactants, and the initial intermixing of reactants. Higher reaction heats, reaction temperatures, and atomic interdiffusion rates and smaller reactant spacings and initial intermixing thicknesses lead to higher reaction velocities. The rate at which thermal energy is transferred to unreacted regions

of the reactive composite structures is determined mainly by the reactive composite structure's thermal diffusivity, heat capacity, and density and heat losses to surrounding components or environments. Higher thermal diffusivity and lower heat capacity, density and heat losses all lead to higher reaction velocities.

b. Reaction Temperature: reaction temperature is determined mainly by the given reactants and their volume fraction. Maximum reaction temperatures can be varied from values below 1300K for reactants such as Ti and Al to above 3000K for reactants such as Ti and B. The heating rate in a given location is determined by the rate at which the reactants mix which in turn is determined by their spacing and their interdiffusion rates. Thus, by judiciously choosing the reactants (heats of reaction and interdiffusion rates), their relative volume fractions, and their average spacing, one can tailor the maximum temperature and the rate of heating to this maximum temperature. The decay rate of the temperature will be determined by the volume of the reactive composite structure (size of energy or heat reservoir), the thermal properties of the reactive composite structure, and the contact with and thermal properties of neighboring components. Thus, for example, one can slow the decay rate of the reaction temperature by increasing the volume and lowering the thermal conductivity of the reactive composite structures.

c. Reaction Heat: the heat of reaction within a reactive composite structure is determined by the reactants that are present and their relative volume fraction. For example, the combination of 50 atomic % Al and 50 atomic % Ni produces

a heat of reaction near 1400 J/g or 59kJ/mol. By decreasing the percentage of Al or Ni, this heat can be reduced. Alternatively, by substituting Ti for Ni, the heat or reaction can also be reduced, while by substituting NiOx for Ni, the heat of reaction can be increased. Heats of reaction (formation, reduction-oxidation, and reduction-formation) for a wide variety of reactants have been quantified and published.

d. Emission of Heat: the emission of heat from a reactive composite structure is determined not only by the amount of heat that is generated but also by the rate at which heat is generated and the rate at which it can be transferred to a surrounding component or the environment.

e. Emission of Light: the emission of light is determined by the surface temperature and emissivity of the reactive composite structure. As both values increase, the emission of light increases. The control of reaction temperature is mentioned above. A reactive composite structure's emissivity can be increased (or decreased) by coating the reactive composite structure with a material with a high (or low) emissivity. Roughening the surfaces of more reactive composite structures can also alter their emissivity and reflectivity.

f. Emission of particles: a reactive composite structure can be coated with particles that are emitted from its surface on ignition. Alternatively, the reactive composite structure can be designed to break up into hot particles on reaction. The particles could be liquid, solid, or a combination of both. Reactive composite structures that contain high-energy formation reactions or thermite (reduction-oxidation) reactions are likely to emit hot particles, particularly if the

spacing between reactants is coarse. In this case, some but not all of the reactants intermix as the reaction initially propagates across the reactive composite structure. The partial reaction of the reactive composite structure can release sufficient energy to break the remaining structure into hot particles that continue to react as they are emitted from the base material. Thus, with careful choice of coatings and reactants, one can control the emissions of particles from reactive composite structures.

g. Emission of vapors and odors: many reactive composite structures remain solid during their exothermic reactions, such as low energy Ni – Al foils. However, almost all reactive composite structures can be coated with low melting temperature materials (lead, tin, zinc, solders, etc) that will evaporate as the reactive composite structure reacts and releases energy to the coating. The volume of vapor generated will scale with the thickness of the coating and the energy of the foil. Alternatively, one can design reactive composite structures that have sufficient energy to vaporize all or part of their reactants or reaction product. This is the case with high-energy formation reactions and many thermite or reduction-oxidation reactions. Finally, one can coat reactive composite structures with materials that will generate odors when heated. Thus, through careful choice of coatings and reactants, one can control the emissions of vapors and odors from reactive composite structures.

h. Emission of sound: reactive composite structures can produce sounds through the rapid emission of vapors, particularly emission into a confined volume. Using the guidelines for the generation of vapors noted above one can

maximize the emission of sound. Also, one can design outer coatings on the reactive composite structures or internal porous structures within the reactive composite structures that will help to confine the gas so as to generate sound upon reaction.

D. Phase and Geometry of Reactive Composite Structures:

[0054] Reactive composite structures can be designed to be in a solid, liquid, or vapor phase or a combination of these phases during or immediately after reaction. Reactive composite structures can be designed so that their initial and final reacted geometries are in a variety of forms including sheet, strip, wire, hollow tube, block, etc. In addition, reactive composite structures can be designed to alter their initial geometries upon reaction so that the final reacted geometry is different from the initial reacted geometry. One simple example of this is the design of reactive composite structures with inner core layers consisting of materials with low melting temperatures that enable the reactive composite structure to split into multiple pieces on reaction, through the melting and flow of this inner core layer. These different phases and geometries can offer significant advantages in many different applications. A few examples are listed below:

[0055] **1. Examples**

a. Interrupter: to act as an interrupter and break the flow of electricity, or some other signal or flow, a reactive composite structure must either break itself apart or cause some other component to break apart. This breaking can occur by melting or vaporization of the reactive composite structure. The ability to design a reactive composite structure that melts or vaporizes on reaction will enable faster interruption and higher

performance of reactive composite structures in fuse-like applications. Melting and vaporization can be enabled by choosing reactants and/or inner core layers that will melt at lower temperatures. Choosing an initial external structure that breaks apart on reaction can also be beneficial to this application. Thin strips or wires and narrowing strips or wires are more likely to break or fracture on reaction than thicker geometries and therefore will be more effective as fuses. Being able to design or tailor the phases of reactive composite structures during reaction and the initial geometries of reactive composite structures can dramatically improve their performance as interrupters.

b. Breaking Apart or Debonding: the melting or vaporization of a reactive composite structure that is initially holding two components together can enable those two components to break apart upon reaction. The reactive composite structure can also be designed in a hollow geometry or with a soft core layer that will enable the reactive composite structure to split apart and thereby enable two components to break apart as well. Both methods provide a very rapid, low cost, and easy means for breaking apart or debonding components.

c. Signal/Sensor: a reactive composite structure that melts, vaporizes or splits apart can be used as a visual signal that some other event has occurred. The appearance of the foil will be dramatically different than prior to reaction. Only a small pulse of energy would be needed to start

the reaction in a large sheet of reactive composite structure and by reacting over a large area, a large visible signal is obtained.

d. Energy Source: a reactive composite structure that melts upon reaction can limit the maximum temperature to which a neighboring device is exposed by absorbing some of the energy of reaction into the heat of fusion. In addition, as the molten reacted product solidifies, it will release additional energy, even though the reaction has been completed. This will extend the duration of the energy delivery or the signal, which can be beneficial for many different applications.

[0056] **2. Designing and Tailoring Phase and Geometry:**

a. Phases during and immediately following reaction: the phase of the reactive composite structure as it reacts and immediately after it reacts can be controlled by varying the volume fraction of reactants and by varying the reactants that are used. Choosing ratios or combinations of reactants that produce more heat on reaction (Ti and B versus Ti and Al) and choosing combinations of reactants that produce final products with lower melting and vaporization temperatures (Ni-Al versus Pd-Al) will promote the formation of liquids and vapors as a reactive composite structure reacts. In a related manner, choosing reactants with lower melting temperatures like Al will enable melting of some of the reactants prior to mixing and reacting.

b. Initial and Final Geometries: reactive composite structures can be deposited, rolled, extruded, bent, cut, machined, riveted, bolted or glued

into a variety of geometries prior to reaction. These initial geometries can be beneficial to a particular application in the transfer of energies or signals, but they can also be beneficial in that they will enable a change in geometry on reaction such the breaking of a fuse or a bond.

c. Core Layers or Particles: reactive composite structures can be fabricated with inner layers or particles that contain materials with low melting temperatures such as lead, tin, zinc and aluminum. These materials can be deposited, rolled, or bonded into the interior of reactive composite structures. Once the reactive composite structure begins to react, heat from the reaction will melt these layers or particles and will enable the reactive composite structure to break apart in a controlled fashion.

E. Autonomous Nature of Reactive Composite Structure

[0057] Reactive composite structures can be designed to react in a partial or self-propagating mode within many different environments (air, vacuum, water, etc.), and at temperatures below, near or above room temperature, without any additional input from the surrounding environment in the form of gases or energy, other than the energy needed for ignition. Many powder-based reactions require additional energy or gaseous oxygen or nitrogen to proceed or self-propagate. But, reactive composite structures that contain reactants capable of formation reactions, reduction-oxidation reactions, reduction-nitridation reactions, and reduction-formation reactions can be fabricated to react locally near the point of ignition and to self-propagate out from the point of ignition. This is particularly beneficial in many different applications as reactive composite structures can act as self-contained energy sources.

[0058] **1. Designing and Tailoring Autonomous Nature:**

Reactive composite structures can be designed and fabricated to react locally or in a self-propagating mode below, near, or above room temperature through careful design of their chemistry and internal structure. By choosing reactions with sufficiently large heats (>800 J/g) and sufficiently fine spacings of reactants (<10um) many different formation reactions, reduction-oxidation reactions, reduction-nitridation reactions, and reduction-formation reactions can be made to self-propagate below, near, or above room temperature without additional energy or gases from the surroundings. All that is needed is a pulse of energy with a sufficient power and energy density to start the reaction in one location.

As the heats of reaction are decreased and/or the spacing of reactants is increased, the reactive composite structures can be designed to react locally but not to self-propagate across their full geometry. This can be beneficial in some signaling applications where a local reaction offers a signal that an energy pulse has been received in a particular location, for example from a laser.

III. Illustrative Applications of Reactive Composite Structures

[0059] It can now be appreciated that reactive composite structures can be designed and tailored to numerous useful applications. For examples, they can be used as:

A. Energy sources,

B. Initiators, igniters or stimulators of other chemical reactions,

C. Illuminators,

D. Interrupters of electrical or other signal paths,

E. Propellants,

F. Security devices,

G. Separators and splitters,

H. Signal devices and sensors, and

I. Structural components with energetic capabilities ("structural energetics"). These applications will be exemplified in the order presented.

A. Energy Sources

[0060] There are many reactions or phase changes that need energy to be initiated, sustained, supported or enhanced. The energy released from a reactive composite structure can act to sustain, support or enhance a phase change or a reaction. The energy from the reactive composite structure is mainly thermal energy and light energy. It can, however, be converted to magnetic energy or electrical energy.

[0061] Broadly speaking, reactive composite structures can be used to initiate, sustain, support, or enhance reactions and phase changes in applications such as joining, debonding, sealing, unsealing, cooking, energy storage, materials processing (surface treatments) and biomedical operations. Reactive composite structures can also be used to sustain, support, or enhance reactions in devices such as explosives, propellants, flares, pyrotechnics, squibs, primers, bridges, electric matches, explosive cutters, micropropulsion systems, decoys, thermal batteries, traditional batteries, rocket motors, and waterproof matches. Further still, reactive composite structures can be used to sustain, support, or enhance reactions classified by material systems such as thermite reactions (reduction-oxidation), reduction-formation reactions, formation reactions, oxidation reactions (burning of most fuels), nitridation reactions, halogenation

reactions, polymer curing, burning of biological cells (sterilization, cauterization, destroying cancer cells), and phase changes such as melting or vaporization.

[0062] The ability to control how energy is delivered to a device or material system to initiate, sustain, support or enhance a reaction or phase change can be very beneficial in terms of safety, efficiency, cost, speed, localization, etc. By properly designing reactive composite structures, one can control the rate at which energy is delivered, the duration of energy delivery, the total energy delivered, the maximum temperature seen during energy delivery, the area and volume that absorbs this energy, and the stability of the reactive composite structure, prior to its reaction and delivery of energy. Further still, the energy can be delivered over large or small areas and volumes using sheets, particles, strips, wires, meshes, rods, tubes or other solid forms of reactive composite structure.

[0063] **Example 1:** Reactive structures can be used as an energy source to preheat high-temperature solid oxide fuel cells. Figure 3 schematically illustrates a solid oxide fuel cell 300 with reactive structures 301 disposed between individual cells 302. These fuel cells are designed to operate at temperatures between 700 and 1000°C and are used to generate electricity from the reaction of hydrogen and oxygen to form water. The reactive structures serve to heat the electrolyte initially so that ionic diffusion can commence. Reactive structures in sheet, strip, wire, or block form can be inserted between individual segments throughout a fuel cell to heat its contents on ignition of the reactive material. Alternatively these same forms of reactive structures can be wound around the fuel cell to provide heat from the external surfaces of the cell. The reactive structure would be replaceable if it is necessary to shut down and restart the fuel cell.

[0064] The total thermal energy released by the reactive material can be controlled to provide the desired rise and maintenance of temperature within the cell. The stability of the reactive materials can also be controlled so that the cells can sustain long periods at high and low temperatures prior to operation without losing the required performance capabilities. In addition, a series of reactive materials, each more stable than the first, can be ignited in a serial fashion and thus can be used to produce a very long, sustained heating of the fuel cell. The rate of heating and the maximum temperature can be controlled, and the rapid propagation of the exothermic reaction within the reactive material can enable uniform heating over large areas or volumes of the fuel cell.

[0065] **Example 2:** The thermal energy (and possibly UV light) released by reactive composite structure can be used to cure polymeric materials. Typically, curing is accomplished by heating the polymer using a furnace or heat gun or by exposing it to UV light. The reactive composite structures can provide a more rapid and localized source of heat that can be very beneficial when other components associated with or attached to the polymeric materials cannot be heated. They can also prove beneficial when the polymer cannot be exposed to UV due to its proximity to a device or component. The reactive composite structure can be used to provide thermal energy or UV light that will enable curing.

[0066] Fig. 4 shows an assembly 400 to cure a polymer adhesive bond between two components 401. The reactive material 402 is sandwiched between the polymer layers 403 that are adjacent the components 401. Thermal energy from the reactive composite structure can be used to heat thick or thin volumes of polymer for relatively

short durations (seconds to minutes). The heat is provided to enable curing (cross-linking or hardening of the polymer). The total heat, the heating rate, the temperature exposure, and the depth and area of exposure can all be controlled using reactive composite structures. The control of heat transfer to the polymers can enable more rapid curing cycles which can dramatically reduce assembly or packaging times, thereby saving money.

[0067] Reactive composite structures in the form of strips, sheets, wires, tubes or blocks can be placed around or within a polymer material. Upon initiation of a self-propagating reaction within the reactive composite structure, heat will be transferred to the polymer, which will enable curing of the polymer.

B. Initiation, ignition or stimulation

[0068] There are many devices, materials or systems that are in a metastable state and will react or decay to a lower energy state once a sufficient pulse of energy is received by the device, the material, or the system. The pulse of energy that is used to initiate, ignite or stimulate another reaction can be in the form of thermal energy, light energy, magnetic energy, electrical energy, etc. Reactive composite structures emit mainly thermal and light energy but that energy can always be converted into other forms of energy such as electrical or magnetic.

[0069] Broadly speaking, reactive composite structures can be used to ignite reactions in devices such as explosives, propellants, flares, pyrotechnics, squibs, primers, bridges, electric matches, explosive cutters, micropropulsion systems and decoys. They can also be used to ignite reactions classified by material systems such as thermite reactions (reduction-oxidation), reduction-formation reactions, formation

reactions, oxidation reactions (burning of most fuels), nitridation reactions, halogenation reactions, and phase changes such as melting or vaporization.

[0070] The ability to control how that initial pulse of energy is delivered to a device or material system can be very beneficial in the safe and efficient initiation of reactions. By properly designing reactive composite structures, one can control the rate at which energy is delivered, the duration of energy delivery, the total energy delivered, the maximum temperature seen during energy delivery, the area and volume that absorbs this energy, and the stability of the reactive composite structure prior to initiation. Further still, the initial energy can be delivered over large or small areas and volumes using sheets, particles, strips, wires, meshes, rods, tubes or other solid forms of the reactive composite structure.

[0071] Many igniters currently used contain compounds of lead, while older formulas may use mercury. The expended components of these igniters must typically be handled as hazardous waste. The use of a reactive composite structure made of less-toxic or non-toxic materials can prevent production of these hazardous wastes.

[0072] **Example 1:** As shown in Fig. 5 reactive composite structures 501 can be used to ignite solid propellant materials 502 that generate hot gases for propulsion, flares, decoys, etc. In the arrangement of Fig. 5a, reactive composite structures 501 in the form of sheets, strips or wires can be wrapped around solids or shells of propellant. Alternatively, as shown in Fig. 5b these same forms of reactive composite structures 501 can be placed within or throughout the propellant 502 by assembling pieces of propellant around or on, for example, a reactive composite structure. Further still,

propellant can be cast and/or extruded with a reactive composite structure distributed within the propellant and/or on its interior or exterior surfaces.

[0073] Thermal energy released from the reactive composite structure can be used to start the reaction of the propellant by locally raising the temperature of the propellant in contact with the material over its auto-ignition temperature. The rapid propagation of the exothermic reaction within a reactive composite structure enables rapid ignition over large areas of propellant in a controlled manner.

[0074] **Example 2:** Reactive composite structures can be used to ignite powder-based, thermite reactions. These are reduction-oxidation reactions in which one oxide is reduced by a more reactive metal and then the more reactive metal forms a second oxide. These reactions have been used for more than 100 years to join railroad lines. The classic example is the reduction of iron oxide by aluminum and the formation of aluminum oxide and iron. This reaction is energetic enough to yield molten iron that is used to join the rail line. Other examples can be found in propellants or flares.

[0075] As shown in Fig. 6a and 6b, strips, sheets, tubes or blocks of reactive composite structure 601 can be placed in, around, or within a thermite powder mixture or compact 602. Upon initiation of a self-propagating reaction within the reactive composite structure, heat will be transferred to the thermite powder mixture, which in turn will be prompted to react.

C. Illumination

[0076] There are illumination devices, materials or systems that, upon activation, emit energy in a form of intense visible or non-visible light. Intense light is a result of electromagnetic radiation of a wavelength generated by electrical, thermal, physical or

chemical means. Situations that require intense light vary widely, and thus environmental and operational conditions vary widely as well. A situation may require an intense light for SOS signaling be used underwater as well as in air. Another situation may require a light that is invisible to humans, but intense light for a nonvisible light signal receiver. It is therefore desired that the illumination source not require other agents, such as oxygen, so that it can be used in any environment, and that the wavelength be engineered precisely so that it can reliably produce the required illumination.

[0077] Broadly speaking, reactive composite structures can be used as the device, material or as a part of an illumination system that emits IR, visible, UV or other types of electromagnetic radiation. Examples include IR or other visible flares for illumination in general, target illumination, or a two-dimensional light source, an IR or visible flash of light for photography and photomicrography, and a bright flash of visible light for temporarily blinding people or animals, light therapy for people, animals, plants or other living organisms, and intense pulsed light.

[0078] An ability to generate light energy without requiring other agents and to precisely engineer the wavelength of the light that is produced by the reactive composite structure can be beneficial in intense light applications. The wavelength of light can be engineered in multiple different ways. One is to control the maximum temperature of the reactive composite structure by careful selection of the reactants and the ratio of the reactants as described earlier. A second is to control the emissivity of the surface of the reactive composite structure, in particular through the use of coatings. A third

method is to place filters around the reactive composite structure that transmit only the desired wavelengths of light.

[0079] Reactive composite structures can be formed in various shapes using sheets, strips, wires, meshes, particles, rods, tubes or other solid forms that can be used as is or to fully or partially cover other devices, materials or systems. In addition, reactive composite structures can be designed and produced to generate two-dimensional light that is not visible when viewed from the edges but only from the faces.

[0080] **Example 1:** As illustrated in Fig. 7, a reactive composite structure 701 in conjunction with a camera 702 can be used as an infrared flash to take photographs of a subject 703 in the dark without alerting other people or visible light sensors. The exact wavelength and the intensity of the light can be engineered, as well as the activation method that is needed to trigger the light. Wavelengths can be engineered by varying factors such as reactant material systems, ratio of reactant materials used, and geometries. Stability of the reactive composite structures can be engineered so that activation may be easily accomplished with the desired trigger mechanism, such as mechanical shock or electric spark. In addition, reactive composite structures can generate various forms of light in the rain, underwater or in other liquids, as well as in vacuum or in space.

[0081] **Example 2:** As illustrated in Fig. 8 reactive composite structures 801 can be used to generate an intense light that can temporarily blind an animal 802. Exact wavelength and the intensity of the light can be engineered, as well as the activation method that is needed to trigger the light. In addition, reactive composite structures can

generate various forms of light in the air, rain, underwater or in other liquids, as well as in vacuum or in space.

D. Interrupters

[0082] There are circuits, components, devices, and systems that require protection from over-current, damaging current surge, grounding, and electrical short. The protection requires interruption or disconnection of current flow. Interruption mechanism or disconnection materials must be designed to function efficiently as a part of circuits, components, devices, or systems. However such mechanisms or materials must react quickly enough to protect circuits, components, devices, or systems, yet slow enough to ignore non-damaging transient currents.

[0083] Broadly speaking, reactive composite structures can be used to interrupt or disconnect current flow in circuit protection devices such as fast acting, dual element, and slow acting interrupters, fuses, and circuit breakers, as well as sensors to sense over-current conditions. They can also be used to interrupt other types of flow such as radiation or magnetic energy.

[0084] An ability to engineer the ignition sensitivity of reactive composite structures can be beneficial in detecting undesired current conditions, and an ability to engineer reaction time upon ignition can be beneficial in interrupting or disconnecting a current path before damage is done to circuits, components, devices, or systems. In addition, the reaction of the reactive composite structure can cause a change in color or other optical property that can provide an indication that the circuit has been interrupted or disconnected by the reactive composite structure. Also the concentrated/ intense heat energy from a reactive composite structure can produce a high gas pressure to

separate parts of components, devices, or systems from current path. This high heat energy could also melt or vaporize part of the current path. The inherent densification of the reactive composite structures when they react can also be used to break apart the reactive composite structure and thereby interrupt current flow. In addition, reactive composite structures can be designed and placed in various ways by forming shapes using sheets, strips, wires, and meshes, as well as particles, rods, tubes or other solid forms that can be produced using predetermined dimensions or mixed in with other materials, and bulk material forms that can be shaped.

[0085] **Example 1:** Referring to Fig. 9, a reactive composite structure 901 can be used as or used in a fast-acting electrical fuse 902. During normal conditions, an operational current can flow through the reactive composite structure as part of a circuit 903. When an undesired current spike occurs outside of desirable range of amplitude and rise time, the reactive composite structure reacts, which breaks the current path rapidly.

[0086] **Example 2:** Alternatively, as shown in Fig. 10, a reactive composite structure 101 can be used in series with a slow electrical fuse 102 as a fast acting fuse to protect a circuit 103 against the highest and most dangerous current surges. During normal conditions, an operational current can flow through the fuse and the reactive composite structure as part of the circuit. When a low undesired current spike occurs outside of the desirable range of amplitude and rise time, the standard fuse will break and protect the circuit. When a very high current spike occurs outside of the desirable range of amplitude and rise time, the standard fuse will break but the reactive composite structure will react first, thereby breaking the current path more rapidly than would occur with just the standard fuse. The reactive composite structure can also be attached to a

heat sinking material or device 104 to prevent aging due to many exposures to low to moderate current surges and the corresponding ohmic heating.

[0087] **Example 3:** As shown in Fig. 11, reactive composite structures 111 can be used in parallel with a fuse 112 to speed the breaking of electrical fuses and thereby create faster breaking fuses to protect a circuit 113 against the highest and most dangerous current surges. During normal conditions, an operational current can flow through the fuse as part of the circuit. When an undesired current spike occurs outside of the desirable range of amplitude and rise time, the fuse will break and protect the circuit. However, the breaking time can be very slow as the ohmic heating takes awhile to bring the fuse to its melting point. The reactive composite structure can be designed to react once it exceeds a particular temperature that is created by the overcurrent. The reaction of the reactive composite structure will then break apart the fuse very rapidly, thereby interrupting the current path more rapidly than would occur with just the fuse.

E. Propulsion

[0088] There are components, devices, units or systems that require bursts of energy to maneuver, propel or push components in environments such as air, space and water.

[0089] Broadly speaking, reactive composite structures can be used in or they can be used as thrusters, rocket fuels, pyro-mechanical actuated devices, and cartridge actuated devices that provide bursts of energy to maneuver, propel, or push components. More specifically, reactive composite structures can be used as micro-thrusters, in space craft stage separation, explosive cutters, pyrotechnically operated valves, and satellite positioning.

[0090] The ability to engineer the intensity and the duration of energy that is released upon initiation of reactions in reactive composite structures can be beneficial in providing and controlling bursts of energy to maneuver, propel, or push components, devices, units or systems. The concentrated and intense energy (heat and light) produced as a result of the exothermic reaction within a reactive composite structure can vaporize the reactive composite structure or one or more components adjacent to the reactive composite structure to create an expanding gas that can be used to maneuver, propel, or push components. The reactive composite structure can also be used to heat another component or material that emits gas on heating, but does not melt or vaporize itself. High gas pressure can also result from heating of a gas within a porous reactive composite structure or within a device, unit or system.

[0091] Reactive composite structures can also create a thermal expansion mismatch between two or more components, thereby causing components to push apart through the generation of bending moments. (The thermal expansion mismatch can also be used to break bonds between components, in addition to pushing them apart, as noted in a separate application.)

[0092] Lastly, reactive composite structures can be placed in various locations by forming shapes using sheets, strips, wires, and meshes, as well as particles, rods, tubes or other solid forms that can be produced using predetermined dimensions, and bulk material forms that can be shaped.

[0093] **Example 1:** Reactive composite structures can be used as a main charge in a micro-thruster, which is a device that aids in maneuvering and/or separating solid rocket boosters, external fuel tanks from the space shuttle unit, and satellites in space. Figs.

12a and 12b schematically show the use of reactive materials 121 to separate components 122 of a spacecraft. Reactive composite structures can release gas from within themselves (porous reactive composite structures), they can vaporize and thereby produce gas, or they can heat other materials that will produce gas either through vaporization, sublimation, or some other heat induced, gas producing reaction. Reactive composite structures can be made in sheet, strip, wire form and powder-foil pouch form as an instantaneous gas releasing/generating source in the micro-thruster device.

[0094] **Example 2:** Reactive composite structures can be used as a pyrotechnic mixture in pyro-mechanically actuated devices (PADs) like cutters or in cartridge actuated devices (CADs) like canister openers. The main application of the explosive cutter is to cut a cable, a shaft, a rod, a tube, etc. at the press of a button. The blade is driven by a piston actuated by gas pressure produced by a chemical reaction or detonation. Figs. 13a and 13b show the use of reactive components 132 in a CAD 133.

F. Security

[0095] There are components, devices, materials or systems, or parts of components, devices, materials or systems that need to be destroyed upon a particular event. For example, there are many electronic devices such as computers, data storage units, communication devices, electronic cards, etc. that can easily be stolen and misused. Given the financial value of the devices, the data associated with the devices, or the potential for misuse of these devices, it may be desirable to be able to render the devices useless in case of loss or theft. Whether the destruction is used to indicate that device integrity has been breached, or to make a component, device, material or

system nonfunctional, a controlled amount of destructive energy is required. Materials that can provide such destructive energy may be a part of a structure or a non-structural part of a component, device, material or system. It is therefore desired that such material provide an energetic function and possibly a structural function as well.

[0096] Broadly speaking, reactive composite structures can be used to destroy chips (CPU, Memory, Optical, etc.), hard drives, electronic cards, security seals, locks, encrypted hardware, parts of weapons, electronic devices, parts of tools, fixtures, automobiles, motorcycles, boats, bicycles, aircrafts, and housings.

[0097] In terms of application, the reactive composite structure will be designed such that upon a particular event, an ignition method (electrical, mechanical, optical, etc.) will be activated that initiates a chemical reaction within the reactive composite structure. The energy or heat that is generated by this chemical reaction will heat, burn, warp, ignite, or in some way damage part of, some of, or all of other accompanying components, devices, materials or systems. By properly designing reactive composite structures, one can control the rate at which energy is released, the duration of energy release, the total energy released, the maximum temperature seen during energy release, and the area and volume that absorbs this energy, so that the energy can be used to destroy critical parts of components, devices, materials or systems most effectively. Further still, the reactive composite structures can be formed into various shapes such as sheets, strips, wires, and meshes that can be wrapped around components; and particles, rods, tubes or other solids forms that can be produced using predetermined dimensions as well as mixed in with other materials or coated onto components, devices, materials or systems; and bulk material forms that can be shaped. The

reactive composite structure can also be designed to serve a structural function within or on the component, device, material or system that is designed to be destroyed or rendered nonfunctional upon a particular event. Thus, an ability to engineer the mechanical properties of the reactive composite structures is also desired and can be accomplished. Lastly, the method of igniting the reactive composite structures can also be engineered which brings significant flexibility to their design for security-based applications.

[0098] **Example 1:** Reactive composite structures can be used to make a lock nonfunctional. As shown in Figs. 14a and 14b, a key or part of a key 141 can be fabricated using a reactive structure 142. The key could also be designed to ignite the reactive composite structure within the key if it is stolen and then is placed in a lock 143. The heat and energy generated by the reactive composite structure on ignition would render the lock unusable.

[0099] **Example 2:** As illustrated in Fig. 15, a reactive composite structure 151 can be used to burn, erase or destroy information contained in a microchip or electronic card 152. A reactive composite structure could be placed near or against the chip or card that is to be destroyed, and the chemical reaction of the reactive composite structure upon ignition can destroy the physical integrity of the microchip or card and make it nonfunctional. The amount of energy needed to destroy the microchip or card and the position of the reactive composite structure with respect to the chip or card can be controlled according to various microchip and card layouts.

G. Separating or splitting components

[00100] There are components in devices, materials or systems that must separate or split upon a desired event. Separation or splitting can be a result of mechanical or chemical actions or reactions, such as unsealing, debonding, structural unlocking, dismantling, breaking or fracturing, severing, rupturing and stimulating release with pressure. The devices, materials or systems need to function normally before separation or splitting, and may also need to function independently as separate components, devices, materials or systems after separation or splitting. It is therefore important that the method of separation or splitting controls the form, amount and duration of energy delivered to separate or split the components, but not be so excessive as to damage the components in the process. Also, the built-in separating or splitting structure, system or mechanism must be strong and stable enough to support the devices, materials or systems.

[00101] Broadly speaking, reactive composite structures can be used to debond solder, braze, or adhesive joints, unseal polymer seals, break electrical wires, and separate or split latches, nuts, wires, structures, and harnesses.

[00102] Using the heat energy released by the exothermic reaction upon ignition of a reactive composite structure can be beneficial in separating or splitting components. The concentrated and intense heat energy that is produced by the reactive composite structure can produce a high gas pressure to separate or split components. This high gas pressure can result from the sublimation of the final product, the heating of the gas within (porous reactive composite structures) or heat generated around the assembly. This high heat energy could also melt or vaporize a component, thereby splitting or separating other components. In some cases, the heat could cause a thermal

expansion mismatch between components, resulting in a splitting or separating of components. The splitting or separation of the components can also be achieved by utilizing a reactive composite structure in a joint that splits open on ignition at the central layer interface. In addition, reactive composite structures can be placed in various locations by forming shapes using sheets, strips, wires, and meshes, as well as particles, rods, tubes or other solid forms that can be produced using predetermined dimensions, and bulk material forms that can be shaped from reactive composite structures.

[00103] **Example 1:** As illustrated in Fig. 16a and 16b, reactive composite structures 161 can be used as a source of energy for debonding components 162 that are bonded together with solder 163. The concentrated or intense energy released from reactive composite structures can soften, melt, and/or vaporize the solder. Reactive composite structures can be placed within the solder layer in various forms, such as sheets, strips, wires, meshes, and particles. The stability of a reactive composite structure can be engineered so that normal furnace soldering during component assembly does not cause ignition. Also, the components that are combined by soldering may need to stay bonded when transient currents are applied through them during operation, but they may need to debond upon experiencing a mechanical shock above a critical magnitude.

[00104] **Example 2:** Reactive composite structures can be used as or in making a rapid release nut (to release from a bolt) for rapid dismantling or collapsing of structures. As shown in Figs. 17a and 17b, the nut 171 can be made completely with the reactive composite structure or with reactive composite structure as a layer 172 within the nut that helps in splitting the nut apart. The reactive composite structure, when ignited, will

break apart or split the nut. The reactive composite structure would need to be engineered strong and stable enough to function properly as a nut, but must also react upon ignition. Reactive composite structures can be designed in a bulk material form that can be stamped or machined in shape.

H. Signal and Sensor

[00105] There are many applications in which a signal must be received by a sensor and/or a signal must be emitted by a device. Reactive composite structures can be designed and engineered to accomplish either or both functions. Exothermic reactions within reactive composite structures are triggered by the reactive composite structure absorbing sufficient energy. The energy can be delivered to the material in the form of thermal energy, light energy, magnetic energy, electrical energy, or mechanical energy (friction, pressure, etc.). If energy is delivered quickly enough to the reactive composite structure, and with a sufficient density, the reactive composite structure may react in a self-propagating manner. More accurately, if the power density of the energy delivery is high enough, the reactive composite structure can react in a self-propagating manner. If it is delivered slowly or over too large an area or volume (low power density), the reactive composite structure will react in a gradual, non-self-propagating manner, if at all. (For details, see the aforementioned U.S. Application S.N. 10/959,502). By properly designing reactive composite structures, they can be used to sense the absorption of energy by reacting in a self-propagating or non-propagating manner.

[00106] Absorption of large power densities can lead to a self-propagating reaction in a reactive composite structure. However, since the power density needed to initiate a self-propagating reaction can be engineered to be high or low, the reactive composite

structure can be designed to act as a go or no go sensor. In a complementary manner, reactive composite structures can also be designed to act as analog sensors in which the degree of energy input is sensed. In this case the reactive composite structure is designed so that the desired signals do not have sufficient power density to produce a self-propagating reaction within the reactive composite structures. Instead, the reactive composite structure reacts only locally and the degree of reaction scales with the magnitude of the signal being sensed.

[00107] Reactive composite structures also can be used to generate a signal so as to communicate information. The signal can be visible in the form of light (visible, IR, or UV), vapor, particle spraying, or color change. It can be audible in the form of a bang, pop, or crackling noise. It can be odorous such as the release of a fragrance, odor or vapor. It can transmitted through the sense of touch in the form of heat, texture or pressure. It can also be electrical or magnetic, when combined with other devices or materials.

[00108] Besides a reactive composite structure emitting a signal when it reacts in a self-propagating manner, it can also issue signals when it reacts in a nonpropagating manner. A reactive composite structure can be designed so that it produces heat, light, sound, fragrance, odor or vapor, and/or it can change color, texture or shape, in a local vicinity, where it has received enough energy to react locally, but not enough energy to react in a self-propagating manner. Thus, a temporary signal of heat, light, sound, fragrance, odor and/or vapor and/or a permanent signal of a change in color, texture or shape can be obtained locally. These signals will be produced only locally, where the

reactive composite structure reacts. Signals will not be emitted from areas of reactive composite structure beyond the initial reaction zone.

[00109] In terms of the magnitude of the sensing area or of the signal delivered, one can control the area or volume over which the sensing or signaling occurs. The larger the area or volume of reactive composite structure that reacts, the larger the magnitude of the sensing and signaling that is enabled. One can sense energies and deliver signals using sheets, particles, strips, wires, meshes, rods, tubes or other solid forms of reactive composite structure. The magnitude of the signal can also be controlled by combining the reactive composite structure with other materials or devices that can help amplify a given signal.

[00110] In terms of applications, a reactive composite structure can be used to sense and signal failure of a device or material, for instance, aging of a device such as a battery, failure of an electrical fuse, or over-aging of an alloy or polymer. It can be used as an event indicator such as a radiation detector where the radiation to be sensed can span a broad range of wavelengths from above to well below the visible wavelengths and a signal is emitted in the form of a color or texture change. It also can be used as a safety device such as road-side or rescue flares that simply emit a signal.

[00111] **Example 1:** Reactive composite structures can be used to sense and then to signal that a material or a device has been over-aged or damaged through a short burst of high thermal energy (heat) or through a long exposure to low thermal energy (heat). Thermal batteries, propellants, powder mixtures, and polymers are all examples of materials or devices that can be damaged or over-aged through thermal exposure. If the thermal energy is enough to degrade or over-age the material or device, a reactive

composite structure can be designed to sense this aging and to emit a signal upon the absorption of too much thermal energy. Fig. 18 illustrates a thermal battery 180 provided with a reactive material 181 adjacent to the cells 182 to act as an indicator.

[00112] Exposure to high temperatures for short or long times can lead to self-propagating reactions in reactive composite structures and the emission of a short signal in the form of light and heat. The reactive composite structure can also be designed to change color and/or shape and thereby produce a permanent signal. The change in color can be achieved by the oxidation of a coating that was deposited or painted onto the reactive composite structure. One simple example is a thin layer of Cu that is deposited onto the reactive composite structure. When the reactive composite structure reacts, the Cu will oxidize and its color will change from a metallic orange to a green or dark blue. The reactive composite structure can also change shape as it becomes soft when it reacts in a self-propagating manner due to the high reaction temperatures. Thus, it can deform under its own weight or due to surface energies that drive surface area minimization.

[00113] A more common scenario is that materials or devices are exposed to moderate or low temperatures for long periods of time that eventually age or degrade the material or device. Reactive composite structures can sense these exposures and can serve as a signal of the aging or degradation that can occur in the main material or device. The reactive composite structure can be designed to change in appearance or to have its reaction properties change upon exposure to moderate or low temperatures. While the reactive composite structure can be designed to not experience a self-propagating reaction when it is exposed to these low or moderate temperatures, it can be designed

to change appearance due to these exposures. Appearances such as color and texture can change, offering a gradual but permanent signal. Its self-reacting properties can also change when it is removed from the material or device and intentionally reacted in self-propagating manner. Even though the long exposures to moderate or low temperatures many not cause a reaction to self-propagate in the reactive composite structure, the exposures can cause the reactive composite structure to lose some of its stored chemical energy. This loss will then lead to slower reaction temperatures, velocities, and heats if the reactive composite structure is reacted intentionally.

[00114] **Example 2:** A reactive composite structure can be used to indicate exposure to radiation, much like thermal paper is used to indicate exposure to laser radiation, either locally or globally. If the reactive structure is exposed to, say, visible light from a laser, the exposed region can change in color or texture. As illustrated in Fig. 19, the composite material 190 can be designed so that the change 191 will occur locally, just at the place of exposure, or (not shown) will occur globally through the self-propagation of the reaction throughout the full structure.

I. Structural Energetics

[00115] There are many explosive devices, materials or systems that need some type of case, casing, frame, or structure to provide a structural function such as containment, support, or confinement. These cases, casings, frames and structures are fabricated from structural materials that need to be strong, stiff, tough and stable while being exposed to harsh environmental conditions and operational conditions. As examples, a bomb case may experience environmental conditions such as varying temperatures and pressures on a fighter plane going at very high speeds and at very high altitudes.

A missile shell may experience operational conditions such as pressure and thermal shock as it is launched.

[00116] Although the strength, stiffness, toughness and stability of structural materials are very important, the use of conventional structural materials such as steels, aluminum alloys and titanium alloys reduces the effectiveness of explosive devices by absorbing some of the explosive energy and/or by reducing the energy to weight ratio of a device. It is therefore desired that such structural materials provide an energetic function as well as a structural function so that they add to the energy of the explosive devices, materials or systems upon a desired impact or upon a triggering event.

[00117] Broadly speaking, reactive composite structures can be used as structural materials in applications such as missile shells, warhead cases, ammunition casings, high-energy-density explosive frames, drone bodies, and shells of electronic components. These materials are often referred to as structural energetic materials.

[00118] An ability to engineer the mechanical properties and structural integrity of reactive composite structures can be beneficial in the application of structural energetic materials. Whether reactive composite structures are used as the structural materials or partially cover or fully envelop other structural materials and only provide partial structural support, the chemical reaction of the reactive composite structures can provide energy in the form of heat, light, and/or expanding gases to the energetic function of a device such as a missile, a munition, or an explosive. The reactive composite structure can also be designed to heat, burn, ignite, damage, etc. part of or all of the device, material or system in which or on which it is performing a structural function prior to commencement of its energetic function.

[00119] By properly designing reactive composite structures, one can control the rate at which energy is released, the duration of energy release, the total energy released, the maximum temperature seen during energy release, and the area and volume that absorbs this energy, so that the energy can be used to penetrate, add energy, expand the area of energy delivery or contain the area of energy delivery by the devices, materials or systems. By properly designing reactive composite structures one can also control their strength, stiffness, density, toughness, formability, and fatigue resistance. Further still, the reactive composite structures can be formed into various shapes using sheets, strips, wires, and meshes that can be wrapped; particles, rods, tubes or other solids forms that can be produced using predetermined dimensions; and bulk material forms for structural energetic applications.

[00120] **Example 1:** As illustrated in Fig. 20 reactive composite structures 201, 202 can be used as case materials for weapons 203, such as warheads, missiles, and bullets. Reactive composite structures can be manufactured in a variety of ways, such as thin and flexible or in a bulk form that can be shaped. The density of the reactive composite structures can be engineered to meet various energy to weight ratio needs. The stability of reactive composite structures can be engineered to react above a designated threshold. The reactive composite structures can be ignited upon impact with a target or an object, or upon receipt of other ignition energy. The reactive composite structures could trigger the explosion of the warhead, or the explosion of the warhead could trigger the chemical reaction in the reactive composite structures.

[00121] Reactive composite structures can be used to add more energy to weapons and improve their penetrability or explosive energy, and in some cases, can be used to

contain the destruction area to a minimum or maximum. Existing case materials, such as steel, are not reactive, and thus take explosive energy away from the weapons.

[00122] **Example 2:** Reactive composite structures can be used as frame and case materials 211 of Fig. 21 for drone aircraft 212. The reactive composite structures can be ignited upon impact when the drone aircraft gets shot down or unintentionally crashes due to malfunction, or may be triggered remotely if desired, for instance upon capture of the drone. The reaction of the reactive composite structures can be engineered to destroy the drone aircraft partially or completely, including any sensitive electronic equipment within the drone. Reactive composite structures can be manufactured in a variety of ways, such as thin and flexible or in a bulk form that can be shaped. The density of the reactive composite structures can be engineered to meet various energy to weight ratio needs. The stability of reactive composite structures can be engineered to react above a designated threshold that triggers the explosion of the drone aircraft upon impact or upon remote triggering.

REFERENCES CITED

TWB1: T.W. Barbee, Jr, T.P. Weihs, "Ignitable, Heterogeneous, Stratified Structures for the Propagation of Internal, Exothermic, Chemical Reactions along an Expanding Wavefront," U.S. Patent 5,538,795, July 23, 1996.

TWB2: T.W. Barbee, Jr., T.P. Weihs, "Method for Fabricating an Ignitable, Heterogeneous, Stratified Structure," U.S. Patent 5,547,715, August 20, 1996.

EB1: E. Besnoin, S. Cerutti, O.M. Knio, T.P. Weihs, "Effect of Reactant and Product Melting on Self-Propagating Reactions in Multilayer Foils," J. Appl. Phys. 92:5474-5481 (2002).

EB2: E. Besnoin, O.M. Knio, J. Wang, A. Duckham, S.J. Spey, Jr., D. Van Heerden, T.P. Weihs, *Method of Controlling Thermal Waves in Reactive Multilayer Joining and Resulting Product*, Provisional Patent Application filed on April 9, 2003.

KB: K. Blobaum, M.E. Reiss, M. Plitzko, and T.P. Weihs, "Deposition and characterization of a self-propagating CuOx/Al thermite reaction in a multilayer foil geometry," J. Appl. Phys., Vol. 94, No. 5, pp. 2915-2922 (2003)

TSD: T.S. Dyer, Z.A. Munir, V. Ruth, "The Combustion Synthesis of Multilayer NiAl Systems," Scripta Met. 30:1281 (1994).

AJG: A.J. Gavens, D.Van Heerden, A.B. Mann, M.E. Reiss, T.P. Weihs, "Effect of Intermixing on Self-Propagating Exothermic Reactions in Al/Ni Nanolaminate Foils," J. Appl. Phys. 87:1255-1263 (2000).

WCD1: W.C. Danen, J.A. Martin, "Energetic Composites," U.S. Patent 5,266,132, November 30, 1993.

WCD2: W.C. Danen, J.A. Martin, "Energetic Composites and Method of Proving Chemical Energy," U.S. Patent 5,606,146, February 25, 1997.

DMM: D.M. Makowiecki, R.M. Bionta (1995) "Low Temperature Reactive Bonding" U.S. Patent 5,381,944.

DVH1: D. Van Heerden, D. Deger, O.M. Knio, & T.P Weihs, *Method of Hermetic Sealing and Resulting Product*, Provisional Patent Application filed on April 9, 2003.

TPW1: T.P. Weihs, M. Reiss, O. Knio, D. Van Heerden, T. Hufnagel, H. Feldmesser, "Free Standing Reactive Multilayer Foils", U.S. Patent Application 09/846,486, April 18, 2002.

TPW2: T.P. Weihs, M.E. Reiss, D. Van Heerden, and O. Knio, "Reactive Joining Using Multilayer Materials," Provisional U.S. Patent Application Filed May 2, 2000.

TPW3: T.P. Weihs, "Self-Propagating Reactions in Multilayer Materials," in *Handbook of Thin Film Process Technology*, D.A. Glocker and S.I. Shah (Eds.) (IOP Publishing, 1998).

TPW4: T.P. Weihs, A. Gavens, M.E. Reiss, D. Van Heerden, A. Draffin, D. Stanfield, "Self-propagating Exothermic Reactions in Nanoscale Multilayer Materials," TMS Proceedings, Feb. 1997.

TPW5: T.P. Weihs and M. Reiss, "Method of Making Reactive Multilayer Foil and Resulting Product," U.S. Patent 6,534,194, March 18, 2003.

TPW6: T.P. Weihs, O. Knio, M. Reiss, D. Van Heerden, "Composite Reactive Multilayer Foil", US Patent Application 6863992, March 8, 2005

HS: H. Sieber, J.S. Park, J. Weissmuller and J.H. Perepezko, *Structural Evolution and Phase Formation in Cold- Rolled Aluminum-Nickel Multilayer*, Acta Materialia, Vol. 49, pp. 1139-1151, 2001.

AG: A. Giguere, N.H. Hai, N. Dempsey and D. Givord, *Preparation of Microstructured and Nanostructured Magnetic Materials by Mechanical Deformation*, J. of Magnetism and Magnetic Materials, vol. 242-245, 2002, pp. 581-584.

DVH2: D. Van Heerden, E. Besnoin, S.J. Spey Jr., T. Rude, M. Brown, D. Deger, E. Heian, S. Valliappan, O.M. Knio, and T.P. Weihs, "Method and Control of Reactive Multilayer Foil Ignition", U.S. Patent 60/509,526, October 9, 2003.

KY: K.Yasuna, m. Terauchi, A. Otsuki, K.N. Ishihara, P.H. Shingu, *Formation of Nanoscale Fe/Al Multilayer by Repeated Press-Rolling and Its Layer Thickness Dependence of Magnetoresistance*, Materials Science and Engineering A285, 2000, PP. 412-417.

LB: L. Battezzati, P. Pappalepore, F. Durbiano and I. Gallino, *Soild State Reactions in Al/Ni Alternate Foils Induced by Cold Rolling and Annealing*, Acta Materialia, Vol. 47, pp. 1901-1904, 1999.

RJH1: R.J. Hebert and J.H. Perepezko, Deformation-Induced Synthesis and Structural Transformations of Metallic Multilayers, Script Materialia, 50, 2004, pp.807-812.

RJH2: R.J. Hebert and J.H. Perepezko, Structural Transformations in Crystalline and Amorphous Multilayer Samples during Cold Rolling, Script Materialia, 49, 2003, pp.933-939.

JHP: J.H. Perepezko, R.J. Hebert and W.S. Tong, *Amorphous and Nanostructure Synthesis in Al Alloys*, Intermetallics, 10, 2002, pp.1079-1088.

NHH: N.H. Hai, N.M. Dempsey and D. Givord, *Hard Magnetic Fe-Pt Alloys Prepared by Cold-Deformation*, J. of Magnetism and Magnetic Materials, vol. 262-245, 2003, pp. 353-360.

FHK: F.H. Kavarana, K.S. Ravichandran and S.S. Sahay, *Nanoscale Steel-Brass Multilayer Laminates Made by Cold Rolling: Microstructure and Tensile Properties*, Script Materialia, 42, 2000, pp.947-954.

PHS: P.H. Shingu, K.N. Ishihara, A. Otsuki and I. Daigo, *Nano-Scale Multilayer Bulk Materials Manufactured by Repeated Pressing and Rolling in the Cu-Fe System*, Materials Science and Engineering A304-306, 2001, PP. 399-402.

SK: S. Kikuchi, H. Kuwahara,, N. Mazaki, S. Urai and H. Miyamura, *Mechanical Properties of Ag-Ni Super-Laminates Produced by Rolling*, Materials Science and Engineering A234-236, 1997, PP.1114-1117.

ABM: A.B. Mann, A.J. Gavens, M.E. Reiss, D. Van Heerden, G. Bao, T.P. Weihs, J. of Applied Physics, 82, pp. 1178-1188, 1997

RH: R. Hultgren, R. Orr, P. Anderson, K. Kelley, Selected Values of Thermodynamic Properties of Metals and Alloys, Wiley, NY, 1963.

[00123]

APPLICATIONS OF REACTIVE COMPOSITE STRUCTURES
Glen E. Books, Atty. - Reg. No. 24,950 RENA 9304US

Express Mail No. EV 609094253 US

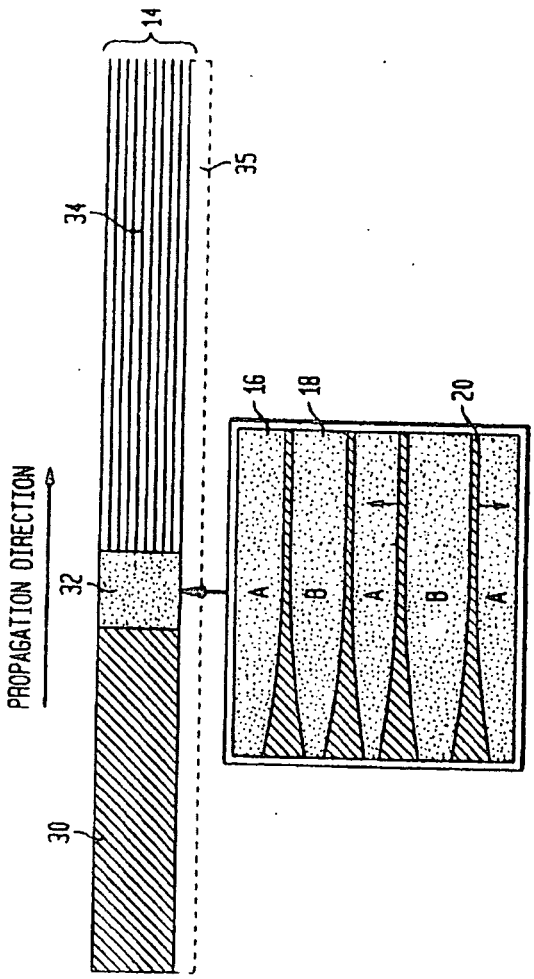

FIG. 1

BEST AVAILABLE COPY

FIG. 2

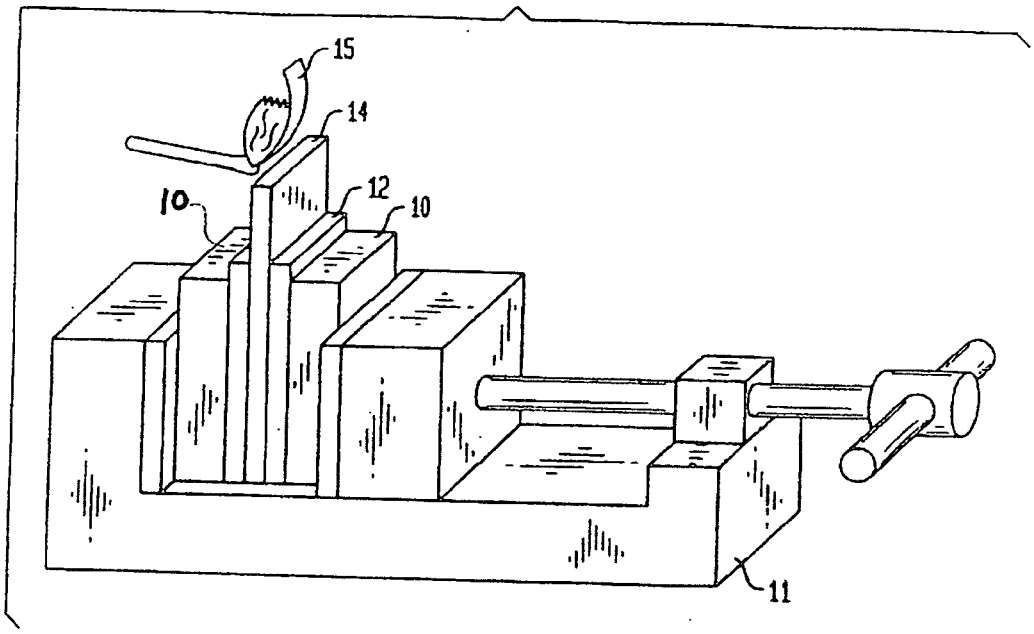

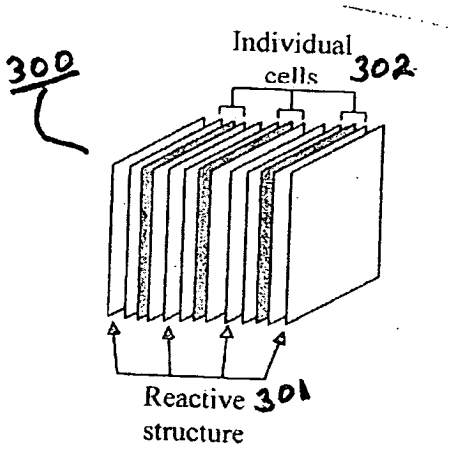

Fig. 3

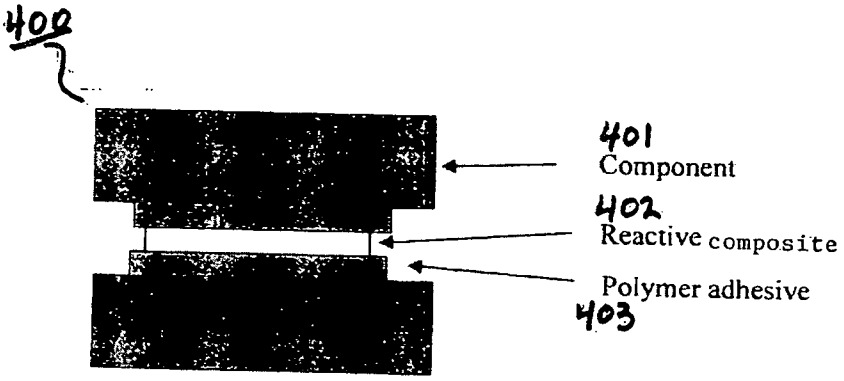
400
401
Component
402
Reactive composite
Polymer adhesive
403

Fig. 4

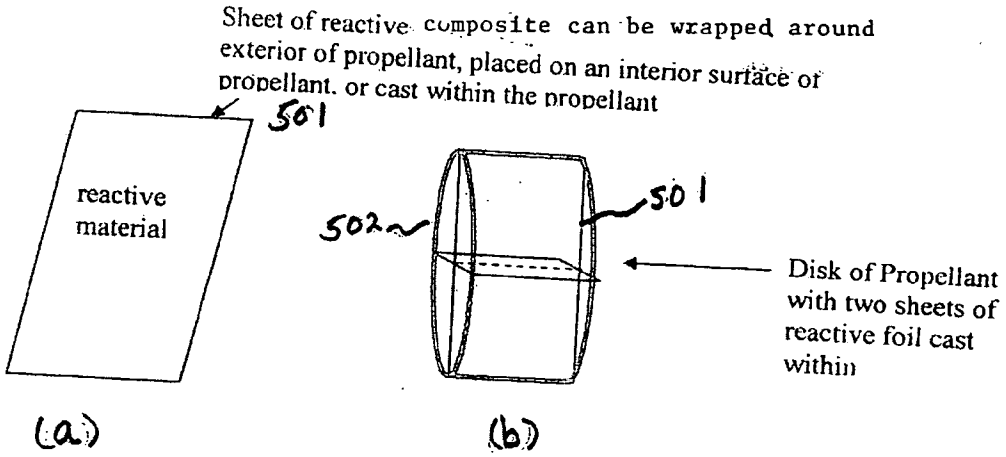
Sheet of reactive composite can be wrapped around exterior of propellant, placed on an interior surface of propellant, or cast within the propellant
501
reactive material
502
501
Disk of Propellant with two sheets of reactive foil cast within
(a)
(b)

Fig. 5

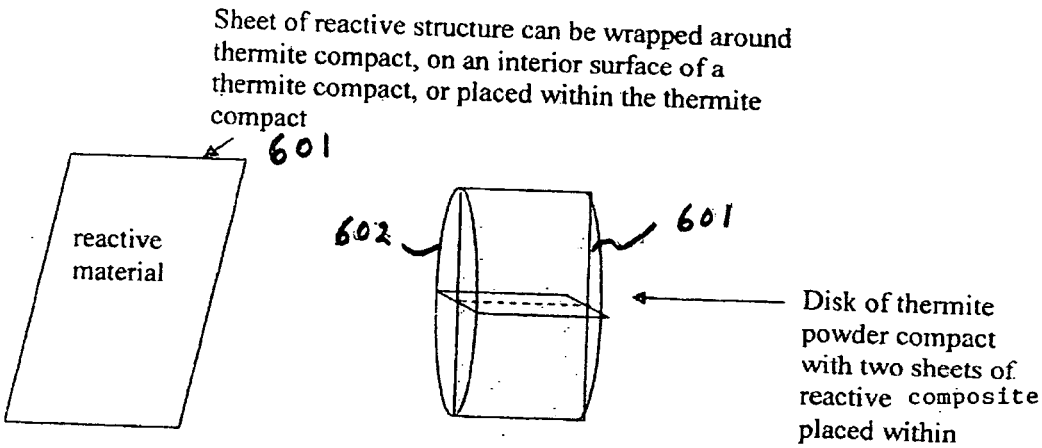
Sheet of reactive structure can be wrapped around thermite compact, on an interior surface of a thermite compact, or placed within the thermite compact
601
reactive material
602
601
Disk of thermite powder compact with two sheets of reactive composite placed within

Fig. 6

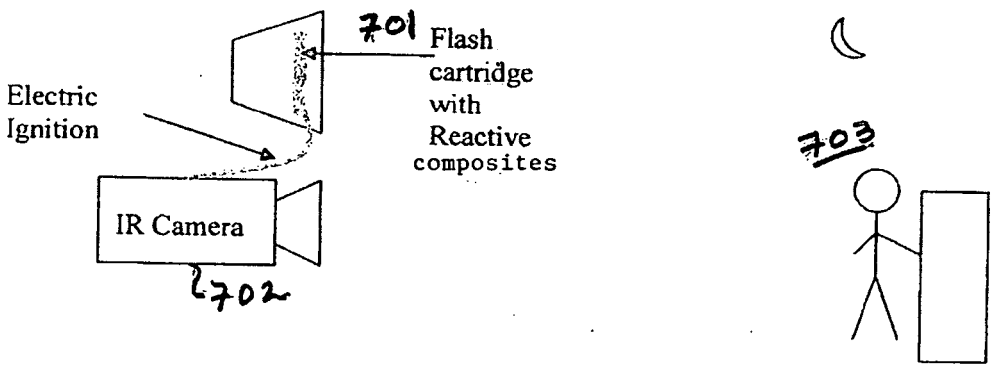
701
Flash cartridge with Reactive composites
Electric Ignition
IR Camera
702
703

Fig. 7

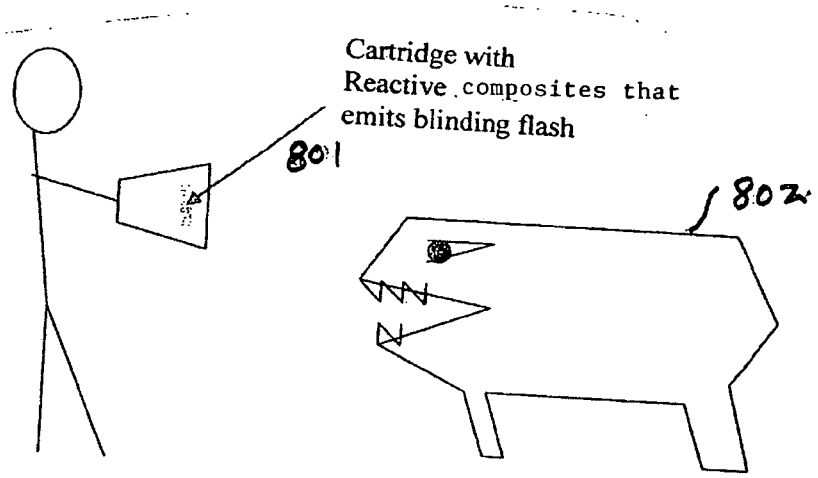
Cartridge with
Reactive composites that
emits blinding flash
801
802

Fig. 8

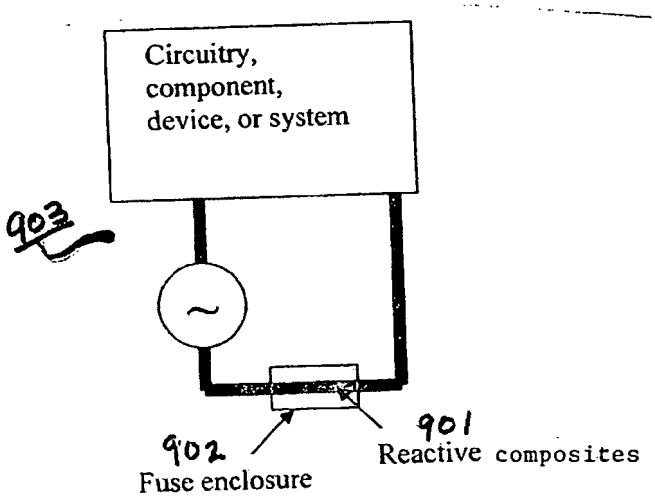
Circuitry,
component,
device, or system
903
902
Fuse enclosure
901
Reactive composites

Fig. 9

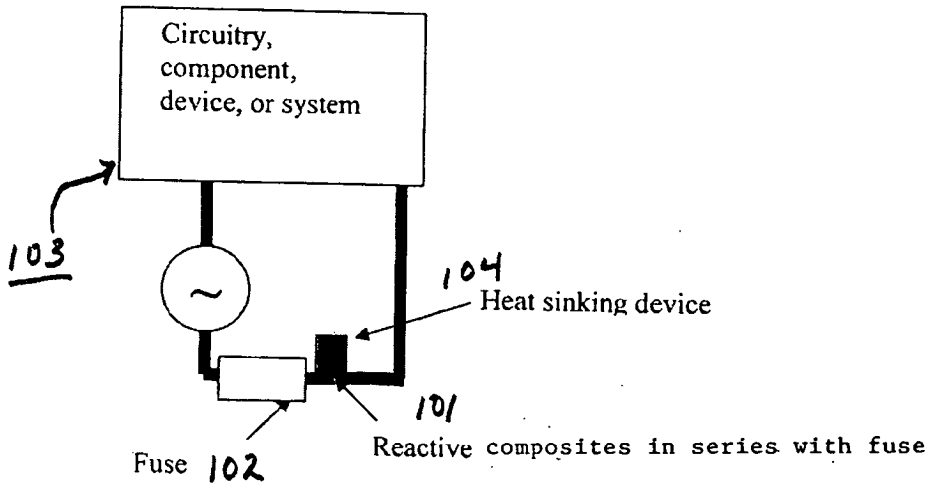

Figure 10.

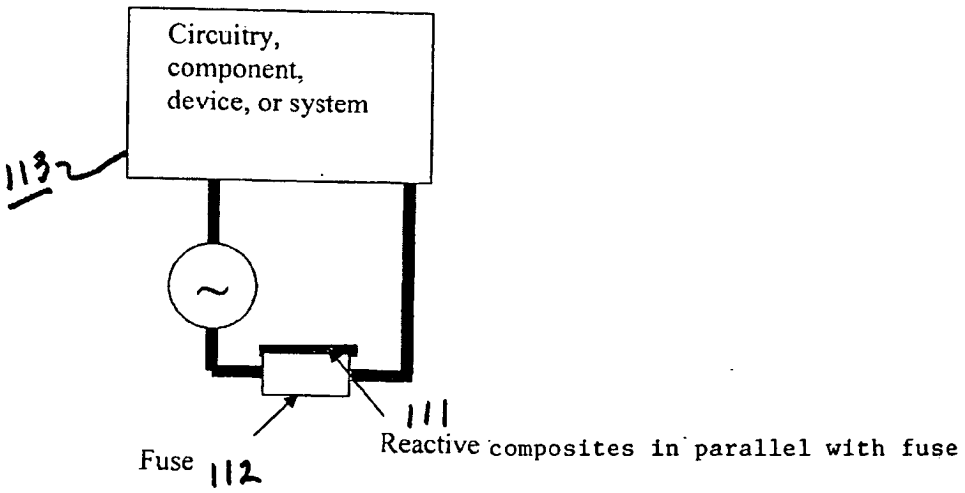

Figure 11.

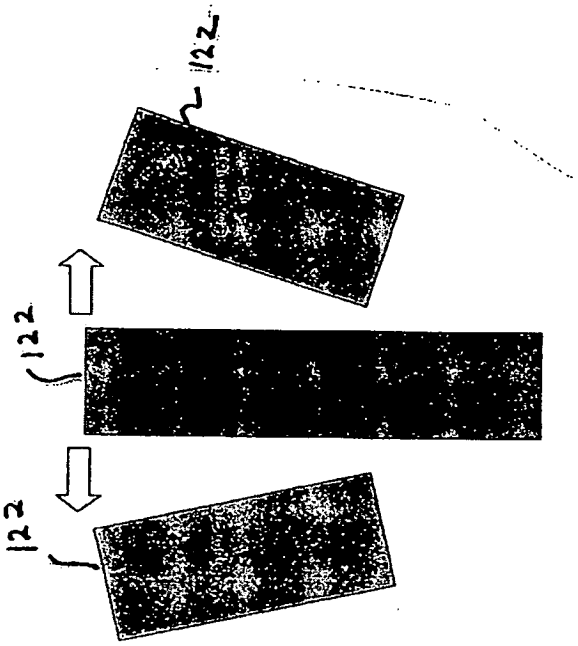

(b) After Ignition

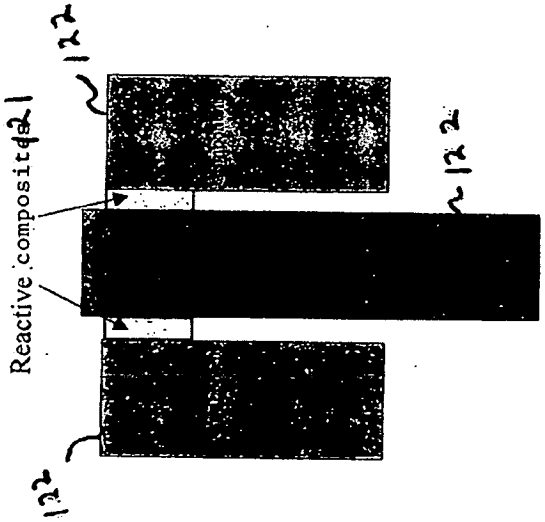

(a) Before Ignition

Fig. 12

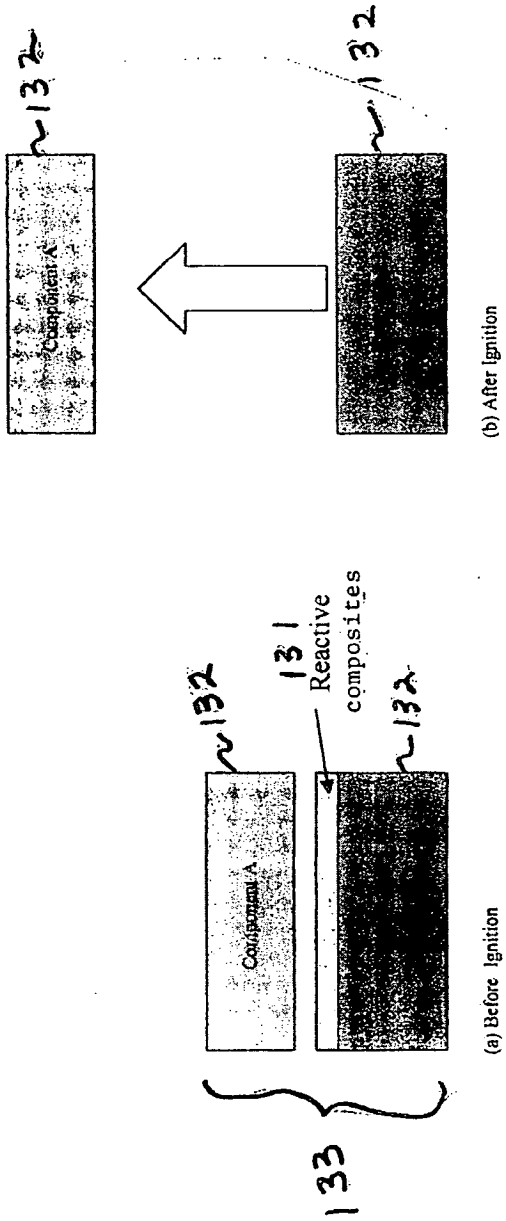
132
Component A
132
(b) After Ignition
132
Component A
131
Reactive composites
132
(a) Before Ignition
133

Fig. 13

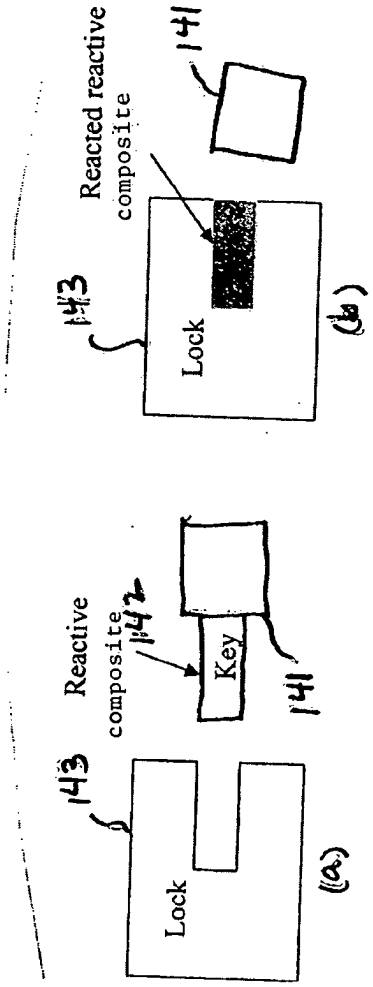
Lock
143
Reactive composite
142
Key
141
(a)
Lock
143
Reacted reactive composite
141
(b)

Fig. 14

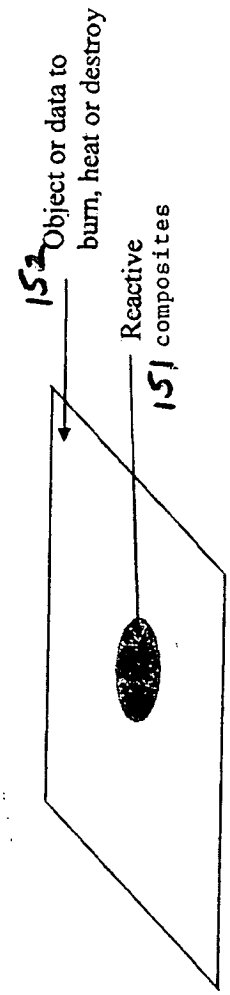
152 Object or data to burn, heat or destroy
Reactive composites
151

Fig. 15

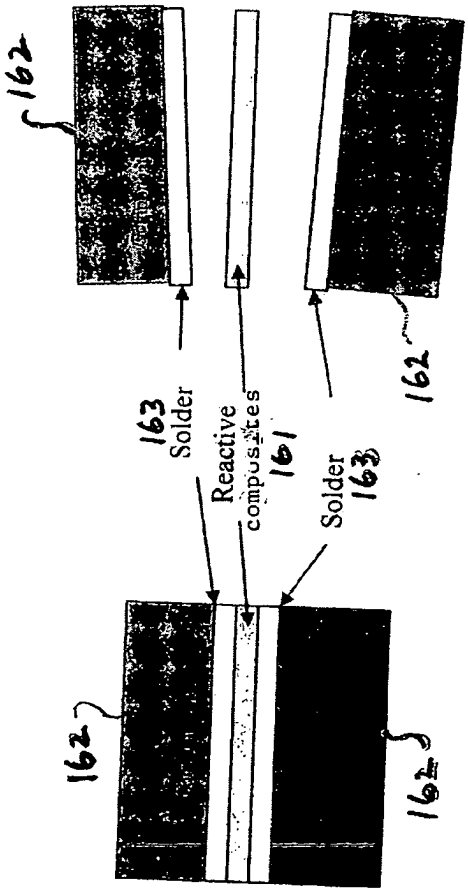

(a) Before reactive material ignition

(b) After reactive material ignition

Fig. 16

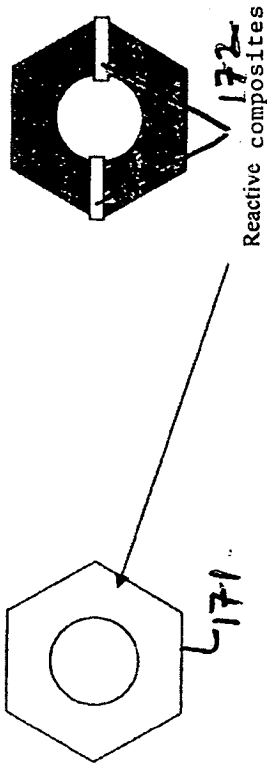

Fig. 17

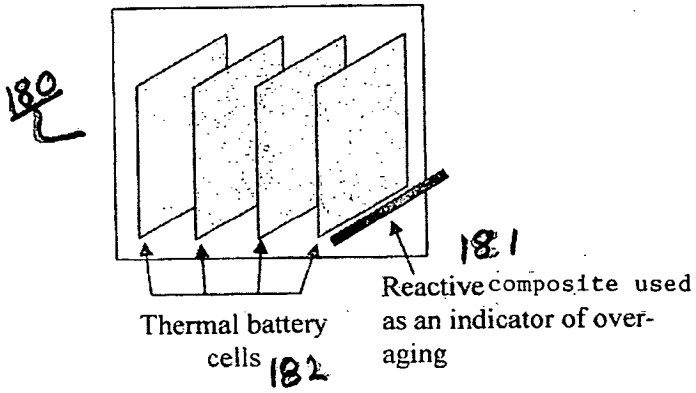
180
181
Reactive composite used as an indicator of over-aging
Thermal battery cells 182

Fig. 18

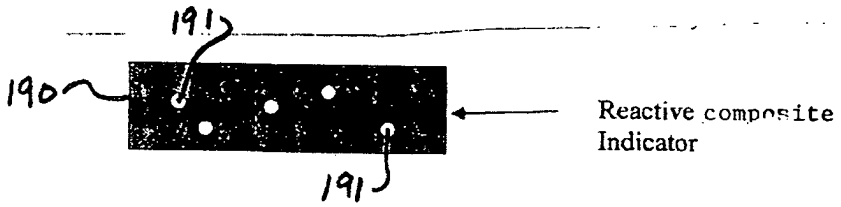

Fig. 19

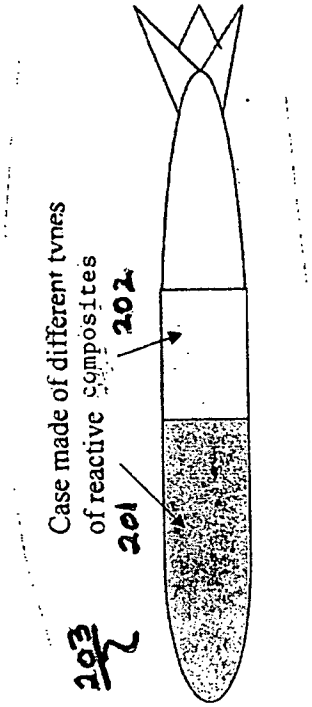
Case made of different types
of reactive composites
202
201
203

Fig. 20

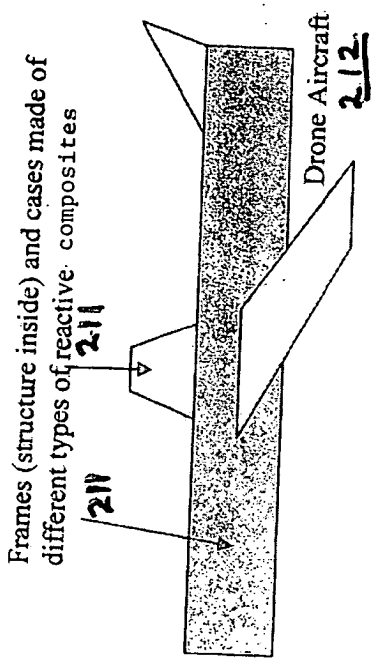
Frames (structure inside) and cases made of different types of reactive composites
211
211
Drone Aircraft
212

Fig. 21

This Page is Inserted by IFW Indexing and Scanning Operations and is not part of the Official Record

BEST AVAILABLE IMAGES

Defective images within this document are accurate representations of the original documents submitted by the applicant.

Defects in the images include but are not limited to the items checked:

- ☐ BLACK BORDERS
- ☐ IMAGE CUT OFF AT TOP, BOTTOM OR SIDES
- ☐ FADED TEXT OR DRAWING
- ☐ BLURRED OR ILLEGIBLE TEXT OR DRAWING
- ☐ SKEWED/SLANTED IMAGES
- ☑ COLOR OR BLACK AND WHITE PHOTOGRAPHS
- ☐ GRAY SCALE DOCUMENTS
- ☐ LINES OR MARKS ON ORIGINAL DOCUMENT
- ☐ REFERENCE(S) OR EXHIBIT(S) SUBMITTED ARE POOR QUALITY
- ☐ OTHER: _____

IMAGES ARE BEST AVAILABLE COPY.
As rescanning these documents will not correct the image problems checked, please do not report these problems to the IFW Image Problem Mailbox.

UNITED STATES PATENT AND TRADEMARK OFFICE

COMMISSIONER FOR PATENTS
UNITED STATES PATENT AND TRADEMARK OFFICE
P.O. BOX 1450
ALEXANDRIA, VA 22313-1450
www.uspto.gov

Paper No.

OGILVY RENAULT LLP
1981 MCGILL COLLEGE AVENUE
SUITE 1600
MONTREAL QC H3A2Y-3
CANADA

COPY MAILED

JAN 05 2007

OFFICE OF PETITIONS

In re Application of	:	
Gavriel State	:	ON PETITION
Application No. 60/781,961	:	
Filed: March 14, 2006	:	
Atty Docket No. 17961-1USPR	:	

This is in response to the "PETITION FOR REVIVAL OF AN APPLICATION FOR PATENT ABANDONED UNAVOIDABLY UNDER 37 CFR 1.137(a)," filed October 26, 2006.

A Notice to File Missing Parts of Provisional Application was mailed in the above-identified provisional application on March 28, 2006. The Notice set a two-month time period for applicants to pay the statutory basic filing fee and a late filing fee surcharge.

On October 26, 2006, applicant filed the instant petition, along with payment of the statutory basic filing fee, the surcharge and authorization to charge any required fees.

Applicant is advised that the above-identified application is not abandoned. As stated in MPEP 710.02(e),

> The 2-month time period for reply to A Notice to File Missing Parts of an Application is not identified on the Notice as a statutory period subject to 35 U.S.C. 133. Thus, extensions of time of up to 5 months under 37 CFR 1.136(a), followed by additional time under 37 CFR 1.136(b), when appropriate, are permitted.

Thus, the period for reply to the Notice mailed March 28, 2006, with the extensions of time, extended to October 28, 2006.

Accordingly, the response filed October 26, 2006 is timely filed with a five-month extension of time. Pursuant to the accompanying authorization, the five-month extension of time has been charged to Deposit Account No. 19-5113.

Given that the application is not abandoned, consideration of the petition under § 1.137(a) is unnecessary. As such, no petition fee is required and none has been charged.

The Office of Initial Patent Examination (OIPE) has been advised of this decision. The application is, thereby, forwarded to OIPE for processing of the response timely filed October 26, 2006.

Telephone inquiries related to this decision should be directed to the undersigned at (571) 272-3219.

Nancy Johnson
Senior Petitions Attorney
Office of Petitions

UNITED STATES PATENT AND TRADEMARK OFFICE

Commissioner for Patents
United States Patent and Trademark Office
P.O. Box 1450
Alexandria, VA 22313-1450
www.uspto.gov

BANNER & WITCOFF, LTD.
TEN SOUTH WACKER DRIVE
SUITE 3000
CHICAGO, IL 60606

COPY MAILED
MAY 0 3 2006
OFFICE OF PETITIONS

In re Application of
Stephen Hardy et al.
Application No. 60/782,000
Filed: March 13, 2006
Attorney Docket No. 011610.00163

ON PETITION

This is a decision on the Petition under 37 CFR 1.53 to accept Figures 19 and 20 as having been filed with the original application papers on March 13, 2006.

The petition is **DISMISSED**.

On March 13, 2006, the application was filed. On March 28, 2006, the Office of Initial Patent Examination mailed a Notice of Omitted Items in a Provisional Application stating that the application had been accorded a filing date of March 13, 2006, but that Figures 19 and 20 described in the specification appeared to have been omitted.

In response, petitioner explains that no figures were missing on March 13, 2006, that the application consisted of 41 figures and that Figure 19 was on the sheet with Figure 18 and that Figure 20 was on the sheet with Figure 21. A copy of drawing sheets containing Figures 18 and 19 and 20 and 21 was submitted with the petition.

A review of the file reveals that the drawings sheets filed with the original application papers are not the same as the drawings submitted with the instant petition. The drawing sheet containing Figure 18 only has that figure on that page and there are no drawing sheets that contain Figures 19 and 20. Furthermore, the sheet containing Figure 21 also contains Figure 22.

Thus, petitioner is reminded that no amendment/corrections, other than to make the provisional application comply with the patent statute and all applicable regulations, may be made to a provisional application after the filing date of the provisional application. See 37 CFR 1.53(c); 37 CFR 1.121(j).

As well, the option to take the later filing date, *i.e.*, the date of submission of the omitted

page(s) or drawing(s), is not available.[1] As such, if petitioners desire to have the pages containing Figure 18 and Figure 20 to also reflect Figure 19 and Figure 21, petitioners should simply file a new completed provisional application.

The application will be processed and examined using the application papers filed on March 13, 2006.

The present petition was not necessitated by any error on the part of the upon filing of Office therefore, the petition fee in the amount of $400.00 will not be refunded.[2]

This matter is being referred to the Office of Initial Patent Examination (OIPE) for further processing, using only the application papers received in the Office on March 13, 2006.

Telephone inquiries regarding this decision should be directed to the undersigned Petitions Attorney at (571) 272-3212.

Patricia Faison-Ball

Patricia Faison-Ball
Senior Petitions Attorney
Office of Petitions

---

[1]MPEP 601.01(d). In view of the relatively low filing fee for provisional applications, and the USPTO's desire to minimize the processing of provisional applications, the USPTO will not grant petitions under 37 CFR 1.182 to accept omitted page(s) or drawing(s) and accord an application filing date as of the date of submission in provisional applications. The applicant should simply file a new completed provisional application. Id.

[2]The fee for a petition under 37 CFR 1.53 to accord a filing date is set at $400.00 not $200.00 pursuant to 37 CFR 1.17(f).

UNITED STATES PATENT AND TRADEMARK OFFICE

Commissioner for Patents
United States Patent and Trademark Office
P.O. Box 1450
Alexandria, VA 22313-1450
www.uspto.gov

COPY MAILED
SEP 15 2006
OFFICE OF PETITIONS

REINHART BOERNER VAN DEUREN P.C.
2215 PERRYGREEN WAY
ROCKFORD, IL 61107

In re Application of	:	
Tarquini, et al.	:	
Application No. 60/782,194	:	DECISION GRANTING PETITION
Filed: March 14, 2006	:	
Attorney Docket No. 505280-PROV	:	

This is a decision on the petition filed May 30, 2006, requesting that the above-identified application retain the presently accorded a filing date of March 14, 2006, with Figure 2, as part of the original disclosure.

On March 14, 2006, the above-identified application was filed. On March 29, 2006, the Office of Initial Patent Examination mailed a "Notice of Omitted Items of Provisional Application" (the "Notice"), stating that the application had been accorded a filing date of March 14, 2006, however, Figure 2, as described in the specification, appeared to have been omitted. The Notice allowed a non-extendable two-month period for reply beginning from the mailing date of the Notice.

In response, on May 30, 2006, applicants filed the present petition and a copy of an Office date-stamped postcard showing that, among other items, 1 sheet of drawing containing Figure 2 was received on March 14, 2006.

Upon review of the record, Figure 2 was located among the application papers. Therefore, the application, including Figure 2 was complete on filing and entitled to the presently accorded filing date of March 14, 2006.

Accordingly, the petition is granted; the Notice is vacated, accordingly. The petition fee of $400.00 will be refunded, in due course.

The application file is being returned to the Office of Initial Patent Examination for further processing with the presently accorded filing date of March 14, 2006, including Figure 2.

Any inquiries related to this decision should be directed to the undersigned at (571) 272-3222.

Kenya A. McLaughlin
Petitions Attorney
Office of Petitions

UNITED STATES PATENT AND TRADEMARK OFFICE

Commissioner for Patents
United States Patent and Trademark Office
P.O. Box 1450
Alexandria, VA 22313-1450
www.uspto.gov
DIW Mar-07

COPY MAILED

MAR 30 2007

OFFICE OF PETITIONS

FISH & RICHARDSON P.C.
PO BOX 1022
MINNEAPOLIS MN 55440-1022

In re Application of
Linschoten et al.
Application No. 60/782,381
Filed: 15 March, 2006
Atty Dckt No. 13425-181P03

DECISION GRANTING PETITION

This is a decision in reference to the "REQUEST FOR CORRECTED OFFICIAL FILING RECEIPT" filed on 17 November, 2006, which is treated as a petition under 37 CFR 1.10(c), requesting that the above-identified application be accorded a filing date of 15 March, 2006, rather than the currently-accorded filing date of 10 March, 2006.

The petition is **granted**.

Petitioners assert that the application was deposited in Express Mail Service on 15 March, 2006. In support, petitioner has provided a copy of the Express Mail Customer Label EV566217151US (the same Express Mail number found on the itemized design application transmittal sheet accompanying the original application papers located in the official file). The "date-in" on the Express Mail label is "3-15-06". Additionally, the Express Mail label contains an official USPS postmark dated March 15, 2006.

As such, the showing of record is that the correct date of deposit in Express Mail is 15 March, 2006.

In view of the above, the petition is granted. No fee is required and none has been charged.

The application is being referred to the Office of Initial Patent Examination (OIPE) for correction of the filing date to 15 March, 2006, and for issuance of a corrected Filing Receipt.

Telephone inquiries related to this decision should be directed to the undersigned at 571-272-3231.

D Wood

Douglas I. Wood
Senior Petitions Attorney
Office of Petitions

UNITED STATES PATENT AND TRADEMARK OFFICE

Commissioner for Patents
United States Patent and Trademark Office
P.O. Box 1450
Alexandria, VA 22313-1450
www.uspto.gov

SEED INTELLECTUAL PROPERTY LAW GROUP PLLC
701 FIFTH AVE
SUITE 6300
SEATTLE WA 98104-7092

COPY MAILED

AUG 07 2006

OFFICE OF PETITIONS

In re Application of	:
Fleckenstein	: DECISION GRANTING
Application No. 60/782,492	: PETITION
Filed: March 16, 2006	:
Attorney Docket No. 110184.427P2	:
For: CARD SHOE FOR HOLDING PLAYING CARDS	

This is a decision on the petition, filed May 11, 2006, requesting that the above-identified application be accorded a filing date of March 15, 2006 rather than the presently accorded filing date of March 16, 2006. The petition will be treated under 37 CFR 1.10(c).

Petitioner requests the earlier filing date on the basis that the application was deposited in Express Mail service of the United States Postal Service (USPS) on March 15, 2006, pursuant to the requirements of 37 CFR 1.10. The petition is accompanied by a copy of Express Mail label no. EV447226881US showing a "date-in"**of 3/16/06 and** a USPS date stamp of MAR 15 2006. Petitioners have supplied with the present petition a copy of a USPS Track and Confirm printout that shows a package associated with Express Mail label no. EV447226881US was accepted by the USPS on March 15, 2006. The same Express Mail label number is listed on the original Provisional Application for Patent Cover Sheet found in the application file.

The evidence presented establishes that the Express Mail package associated with Express Mail label no. EV447226881US was deposited with the USPS on March 15, 2006.

Accordingly, the petition is granted.

No fee has been or will be charged in connection with this petition.

The application is being returned to the Office of Initial Patent Examination for correction of the filing date to **March 15, 2006**.

Any inquiries related to this decision should be directed to the undersigned at (571) 272-3230.

Shirene Willis Brantley

Shirene Willis Brantley
Petitions Attorney
Office of Petitions

UNITED STATES PATENT AND TRADEMARK OFFICE

UNITED STATES DEPARTMENT OF COMMERCE
United States Patent and Trademark Office
Address: COMMISSIONER FOR PATENTS
P.O. Box 1450
Alexandria, Virginia 22313-1450
www.uspto.gov

APPL NO.	FILING OR 371 (c) DATE	ART UNIT	FIL FEE REC'D	ATTY.DOCKET NO	DRAWINGS	TOT CLMS	IND CLMS
60/782,561	03/15/2006		100	07039-669P01 / MMV-05-205	3		

CONFIRMATION NO. 4231

CORRECTED FILING RECEIPT

OC000000020288630

26191
FISH & RICHARDSON P.C.
PO BOX 1022
MINNEAPOLIS, MN 55440-1022

Date Mailed: 09/01/2006

Receipt is acknowledged of this provisional Patent Application. It will not be examined for patentability and will become abandoned not later than twelve months after its filing date. Be sure to provide the U.S. APPLICATION NUMBER, FILING DATE, NAME OF APPLICANT, and TITLE OF INVENTION when inquiring about this application. Fees transmitted by check or draft are subject to collection. Please verify the accuracy of the data presented on this receipt. **If an error is noted on this Filing Receipt, please mail to the Commissioner for Patents P.O. Box 1450 Alexandria Va 22313-1450. Please provide a copy of this Filing Receipt with the changes noted thereon. If you received a "Notice to File Missing Parts" for this application, please submit any corrections to this Filing Receipt with your reply to the Notice. When the USPTO processes the reply to the Notice, the USPTO will generate another Filing Receipt incorporating the requested corrections (if appropriate).**

Applicant(s)

Christopher J. Gostout, Rochester, MN;

Power of Attorney:

Michael Hawkins--57867

If Required, Foreign Filing License Granted: 03/28/2006

The country code and number of your priority application, to be used for filing abroad under the Paris Convention, is US60/782,561

Projected Publication Date: None, application is not eligible for pre-grant publication

Non-Publication Request: Not applicable

Early-Publication Request: Not applicable

**** SMALL ENTITY ****

Title

Accessing sites in a body cavity

PROTECTING YOUR INVENTION OUTSIDE THE UNITED STATES

Since the rights granted by a U.S. patent extend only throughout the territory of the United States and have no effect in a foreign country, an inventor who wishes patent protection in another country must apply for a patent in a specific country or in regional patent offices. Applicants may wish to consider the filing of an international application under the Patent Cooperation Treaty (PCT). An international (PCT) application generally has the same effect as a regular national patent application in each PCT-member country. The PCT process **simplifies** the filing of patent applications on the same invention in member countries, but **does not result** in a grant of "an international patent" and does not eliminate the need of applicants to file additional documents and fees in countries where patent protection is desired.

Almost every country has its own patent law, and a person desiring a patent in a particular country must make an application for patent in that country in accordance with its particular laws. Since the laws of many countries differ in various respects from the patent law of the United States, applicants are advised to seek guidance from specific foreign countries to ensure that patent rights are not lost prematurely.

Applicants also are advised that in the case of inventions made in the United States, the Director of the USPTO must issue a license before applicants can apply for a patent in a foreign country. The filing of a U.S. patent application serves as a request for a foreign filing license. The application's filing receipt contains further information and guidance as to the status of applicant's license for foreign filing.

Applicants may wish to consult the USPTO booklet, "General Information Concerning Patents" (specifically, the section entitled "Treaties and Foreign Patents") for more information on timeframes and deadlines for filing foreign patent applications. The guide is available either by contacting the USPTO Contact Center at 800-786-9199, or it can be viewed on the USPTO website at http://www.uspto.gov/web/offices/pac/doc/general/index.html.

For information on preventing theft of your intellectual property (patents, trademarks and copyrights), you may wish to consult the U.S. Government website, http://www.stopfakes.gov. Part of a Department of Commerce initiative, this website includes self-help "toolkits" giving innovators guidance on how to protect intellectual property in specific countries such as China, Korea and Mexico. For questions regarding patent enforcement issues, applicants may call the U.S. Government hotline at 1-866-999-HALT (1-866-999-4158).

LICENSE FOR FOREIGN FILING UNDER
Title 35, United States Code, Section 184
Title 37, Code of Federal Regulations, 5.11 & 5.15

GRANTED

The applicant has been granted a license under 35 U.S.C. 184, if the phrase "IF REQUIRED, FOREIGN FILING LICENSE GRANTED" followed by a date appears on this form. Such licenses are issued in all applications where the conditions for issuance of a license have been met, regardless of whether or not a license may be required as set forth in 37 CFR 5.15. The scope and limitations of this license are set forth in 37 CFR 5.15(a) unless an earlier license has been issued under 37 CFR 5.15(b). The license is subject to revocation upon written notification. The date indicated is the effective date of the license, unless an earlier license of similar scope has been granted under 37 CFR 5.13 or 5.14.

This license is to be retained by the licensee and may be used at any time on or after the effective date thereof unless it is revoked. This license is automatically transferred to any related applications(s) filed under 37 CFR 1.53(d). This license is not retroactive.

The grant of a license does not in any way lessen the responsibility of a licensee for the security of the subject matter as imposed by any Government contract or the provisions of existing laws relating to espionage and the national security or the export of technical data. Licensees should apprise themselves of current regulations especially with respect to certain countries, of other agencies, particularly the Office of Defense Trade Controls, Department of State (with respect to Arms, Munitions and Implements of War (22 CFR 121-128)); the Bureau of Industry and Security, Department of Commerce (15 CFR parts 730-774); the Office of Foreign Assets Control, Department of Treasury (31 CFR Parts 500+) and the Department of Energy.

NOT GRANTED

No license under 35 U.S.C. 184 has been granted at this time, if the phrase "IF REQUIRED, FOREIGN FILING LICENSE GRANTED" DOES NOT appear on this form. Applicant may still petition for a license under 37 CFR 5.12, if a license is desired before the expiration of 6 months from the filing date of the application. If 6 months has lapsed from the filing date of this application and the licensee has not received any indication of a secrecy order under 35 U.S.C. 181, the licensee may foreign file the application pursuant to 37 CFR 5.15(b).

UNITED STATES PATENT AND TRADEMARK OFFICE

Commissioner for Patents
United States Patent and Trademark Office
P.O. Box 1450
Alexandria, VA 22313-1450
www.uspto.gov

FISH & RICHARDSON PC
P O BOX 1022
MINNEAPOLIS, MN 55440-1022

COPY MAILED

NOV 0 7 2006

OFFICE OF PETITIONS

In re Application of	:	
Christoper J. Gostout	:	
Application No. 60/782,561	:	DECISION GRANTING
Filed: March 15, 2006	:	PETITION
Attorney Docket No. 07039-669P01/MMV-05-205	:	

This is a decision on the petition, filed April 4, 2006 and resubmitted on August 14, 2006, requesting that the above-identified application be accorded a filing date of March 15, 2006. The petition is properly treated as a petition under 37 CFR 1.10(c).

Petitioner alleges that the application was deposited in Express Mail Service on March 15, 2006. In support of this allegation, the petition is accompanied by a copy of Express Mail receipt No. EV 467329085 US (the same Express Mail number found on the original application papers located in the official file) showing a "date in" of March 15, 2006, as well as a Minneapolis, MN United Postal Service date stamp of March 15, 2006. Additionally, the petition is accompanied by a copy of a receipt from the United States Postal Service of Minneapolis, MN, which shows that the fee for the postage for the package at issue bearing the above-noted Express Mail number, was paid on March 15, 2006.

The Office considers the date the paper or fee is shown to have been deposited as "Express Mail" to be the "date-in" on the Express Mail label; MPEP 513. The evidence is convincing that the application was deposited as "Express Mail" with the U. S. Postal Service on March 15, 2006.

In view of the above, the petition is **GRANTED**. This application has been accorded a filing date of March 15, 2006. It is noted that a Corrected Filing Receipt with a filing date of March 15 2006 was mailed on September 1, 2006.

Telephone inquiries relating to this decision should be directed the undersigned at (571) 272-3218.

Frances Hicks
Petitions Examiner
Office of Petitions

UNITED STATES PATENT AND TRADEMARK OFFICE

Commissioner for Patents
United States Patent and Trademark Office
P. O. Box 1450
Alexandria, VA 22313-1450
www.uspto.gov

MCCARTER & ENGLISH, LLP
FOUR GATEWAY CENTER
100 MULBERRY STREET
NEWARK NJ 07102

COPY MAILED

NOV 28 2006

OFFICE OF PETITIONS

In re Application of	:	
Craig A. Swanson et al	:	
Application No. 60/782,842	:	DECISION GRANTING FILING
Filed: March 16, 2006	:	DATE OF MARCH 16, 2006
Attorney Docket No. 97168-00010	:	

This is a decision on the petition filed June 22, 2006 which is being treated as a petition under 37 CFR 1.10 (d), requesting that the above-identified application be accorded a filing date of March 16, 2006, rather than the presently accorded filing date of March 17, 2006.

Petitioner alleges that the date indicated in the Date-In field of the Express Mail label is incorrect. In support, petitioner has submitted a copy of the Express Mail Label No. EV623708726US showing a date stamp of March 16, 2006, by the USPS. The same Express Mail receipt number appears on the original Application Transmittal filed with the instant application. In addition a copy of the USPS Track & Confirm was submitted which shows the acceptance date of March 16, 2006, in Newark, NJ for the same Express Mail receipt number.

In view of the above, it is concluded that the application was deposited as "Express Mail" with the US Postal Service on March 16, 2006.

The petition is **granted**.

This matter is being referred to the Office of Initial Patent Examination for processing with a filing date of **March 16, 2006**, and for the mailing of a corrected Filing Receipt.

Telephone inquiries specific to this matter should be directed to Karen Creasy at (571) 272-3208.

Karen Creasy

Karen Creasy
Petitions Examiner
Office of Petitions

UNITED STATES PATENT AND TRADEMARK OFFICE

Commissioner for Patents
United States Patent and Trademark Office
P.O. Box 1450
Alexandria, VA 22313-1450
www.uspto.gov

WORKMAN NYDEGGER
(F/K/A WORKMAN NYDEGGER & SEELEY)
60 EAST SOUTH TEMPLE
1000 EAGLE GATE TOWER
SALT LAKE CITY, UT 84111

COPY MAILED
JUN 0 9 2006
OFFICE OF PETITIONS

In re Application of	:	
Michael D. Halverson	:	
Application No. 60/782,975	:	ON PETITION
Filed: March 16, 2006	:	
Attorney Docket No. 16339.6	:	

This is a decision on the petition under 37 CFR 1.53, filed May 18, 2006, requesting that the above-identified provisional application be accorded a filing date of March 16, 2006, including four (4) sheets of drawings.

The application was submitted on March 16, 2006. However, on May 12, 2006, the Office of Initial Patent Examination (OIPE) mailed a "Notice Of Incomplete Provisional Application" (Notice) that stated the application had not been accorded a filing date, and that the application was deposited without drawings.

In response, on May 18, 2006, the instant petition was submitted. Petitioner argues that four (4) sheets of drawings were filed on March 16, 2006. In support, the instant petition is accompanied by a copy of applicants' postcard receipt that acknowledges receipt of "Drawings (4 sheets)" on March 16, 2006. A review of the application file indicates the presence of zero (0) sheets of drawings filed on March 16, 2006. It is assumed that missing sheets of drawings were misplaced by the Office.

In view of the above, the petition is granted.

This application will be returned to OIPE for issuance of a corrected filing receipt and further processing with a filing date of March 16, 2006 using the four (4) sheets of drawings, supplied on May 18, 2006.

Telephone inquiries regarding this decision should be directed to the undersigned at (571) 272-3228.

Edward J. Tannouse
Petitions Attorney
Office of Petitions
Office of the Deputy Commissioner
for Patent Examination Policy

UNITED STATES PATENT AND TRADEMARK OFFICE

Commissioner for Patents
United States Patent and Trademark Office
P.O. Box 1450
Alexandria, VA 22313-1450
www.uspto.gov

COPY MAILED

JUN 14 2007

OFFICE OF PETITIONS

Stephen M. Everett
Kirkpatrick & Lockhart Preston Gates & Ellis
Suite 1700
55 Second Street
San Francisco, CA 94105

In re Application of Goodson	:	
Application No. 60/783,213	:	Decision on Petition
Filing Date: March 17, 2006	:	
Attorney Docket No. 53540-00058	:	

This is a decision on the petition under 37 CFR 1.181, filed January 10, 2007, to withdraw the holding of abandonment.

The petition is **granted.**

A Notice to File Missing Parts was mailed April 26, 2006. The Notice set a period for reply of two (2) months from the mail date of the Notice.

A reply was not matched with the filed. As a result, the application was considered abandoned as of midnight on June 26, 2006.

A Notice of Abandonment was mailed January 4, 2007.

Petitioner contends a timely reply was filed in response to the Notice to File Missing Parts.

The petition includes a statement by Patricia Wiggins. She indicates she spoke to a Mr. Williams in the Office of Initial Patent Examination on May 19, 2006. Ms. Wiggins indicates Mr. Williams instructed Ms. Wiggins to send the reply by facsimile transmission to the fax number he provided.

Petitioner has supplied a copy of a facsimile transmission report. The report indicates a response to the Notice of Missing Parts was sent to the Office at fax number 571-273-9089 at 9:00 p.m. (EST) on Friday, May 19, 2006.

After consideration of all the facts, the Office has determined the holding of abandonment will be withdrawn. The copy of the response to the Notice of Missing Parts filed with the petition will be treated as timely filed.

The Notice of Abandonment is hereby vacated and the holding of abandonment withdrawn.

Petitioner should note similar facts in a petition in the future may not yield a similar result. The Office has issued several notices indicating the importance of sending facsimile transmissions to the central fax number. Unless an exception applies, all faxes should be sent to 571-273-8300. Sending a fax to another number may result in a risk of delay and loss of the paper.

In the future, the Office strongly suggests petitioner send facsimile transmissions in compliance with 37 CFR 1.8.

The Office of Initial Patent Examination will be informed of the instant decision and will take any further steps necessary to process the application.

Telephone inquiries regarding this communication should be directed to Petitions Attorney Steven Brantley at (571) 272-3203.

Charles Steven Brantley
Senior Petitions Attorney
Office of Petitions

UNITED STATES PATENT AND TRADEMARK OFFICE

Commissioner for Patents
United States Patent and Trademark Office
P.O. Box 1450
Alexandria, VA 22313-1450
www.uspto.gov
DIW Jun-06

PATENTS+TMS, P.C.
2849 W. ARMITAGE AVE.
CHICAGO IL 60647

COPY MAILED
JUN 0 9 2006
OFFICE OF PETITIONS

In re Application of	:	
Joel Espelien	:	
Application No. 60/783,282	:	DECISION ON PETITION
Filed: 17 March, 2006	:	
Atty Docket No. PVC-P-06-002	:	

This is a decision on the petition, filed on 11 April, 2006, which is treated as a petition under 37 CFR 1.53, requesting that the above-identified application be accorded a filing date of 17 March, 2006, with Page 4 of the specification as a part of the original disclosure.

The petition is granted.

On 17 March, 2006, the application was filed.

Accordingly, on 29 March, 2006, Initial Patent Examination Division mailed a Notice of Omitted Item(s) in a Provisional Application, stating that the application had been accorded a filing date of 17 March, 2006, but that Page 4 of the specification (description and claims) appeared to have been omitted.

In response, on 11 April, 2006, the present petition and a copy of the specification were filed. Petitioner argues that Page 4 of the specification was filed with the other application papers on 17 March, 2006, but was subsequently misplaced in the U.S. Patent and Trademark Office (Office). In support, a copy of petitioners' postcard receipt was supplied with the present petition. The postcard receipt shows an "Office-date" stamp of "31706" with the above-identified application number, and identifies the application by the inventor's last name and the attorney docket number and acknowledges receipt of, *inter alia*, "Specifications (27 pages)(1 page abstract)." Petitioner requests that the application, including Page 4 of the specification, be accorded a filing date of 17 March, 2006.

A review of the record reveals that no Page 4 of the specification have been located among the application papers received on 17 March, 2006. However, the evidence is convincing that the application papers deposited on 17 March, 2006, included Page 4 of the specification (written description), which was subsequently misplaced in the Office. Therefore, the application, including Page 4 of the specification, is entitled to a filing date of 17 March, 2006.

The "Notice" mailed on 29 March, 2006, is vacated.

In view of the above, the petition is granted. As the petition was necessitated by Office error, the petition fee is unnecessary and will be refunded to counsel's deposit account.

The application will be processed with the copy of Page 4 of the specification supplied on 11 April, 2006, as a part of the original disclosure. The copies of the other application papers supplied on 11 April, 2006, will not be used for processing or examination, but will be retained in the application file.

The application is being referred to Initial Patent Examination Division for further processing with a filing date of 17 March, 2006, using the application papers filed on that date, and the copy of Page 4 of the specification supplied with the present petition.

Telephone inquires should be directed to the undersigned at 571-272-3231.

D Wood

Douglas I. Wood
Senior Petitions Attorney
Office of Petitions

UNITED STATES PATENT AND TRADEMARK OFFICE

UNITED STATES DEPARTMENT OF COMMERCE
United States Patent and Trademark Office
Address: COMMISSIONER FOR PATENTS
P.O. Box 1450
Alexandria, Virginia 22313-1450
www.uspto.gov

APPL NO.	FILING OR 371 (c) DATE	ART UNIT	FIL FEE REC'D	ATTY.DOCKET NO	DRAWINGS	TOT CLMS	IND CLMS
60/783,296	03/17/2006		100	ALV-2.001.PR	9		

CONFIRMATION NO. 1270

CORRECTED FILING RECEIPT

OC000000019361220

22874
GANZ LAW, P.C.
P O BOX 2200
HILLSBORO, OR 97123

Date Mailed: 06/21/2006

Receipt is acknowledged of this provisional Patent Application. It will not be examined for patentability and will become abandoned not later than twelve months after its filing date. Be sure to provide the U.S. APPLICATION NUMBER, FILING DATE, NAME OF APPLICANT, and TITLE OF INVENTION when inquiring about this application. Fees transmitted by check or draft are subject to collection. Please verify the accuracy of the data presented on this receipt. **If an error is noted on this Filing Receipt, please mail to the Commissioner for Patents P.O. Box 1450 Alexandria Va 22313-1450. Please provide a copy of this Filing Receipt with the changes noted thereon. If you received a "Notice to File Missing Parts" for this application, please submit any corrections to this Filing Receipt with your reply to the Notice. When the USPTO processes the reply to the Notice, the USPTO will generate another Filing Receipt incorporating the requested corrections (if appropriate).**

Applicant(s)

David J. Alvarez, Beaverton, OR;

Power of Attorney: The patent practitioners associated with Customer Number **22874**.

If Required, Foreign Filing License Granted: 03/29/2006

The country code and number of your priority application, to be used for filing abroad under the Paris Convention, is US60/783,296

Projected Publication Date: None, application is not eligible for pre-grant publication

Non-Publication Request: Not applicable

Early-Publication Request: Not applicable

**** SMALL ENTITY ****

Title

Tile spacer

PROTECTING YOUR INVENTION OUTSIDE THE UNITED STATES

Since the rights granted by a U.S. patent extend only throughout the territory of the United States and have no

effect in a foreign country, an inventor who wishes patent protection in another country must apply for a patent in a specific country or in regional patent offices. Applicants may wish to consider the filing of an international application under the Patent Cooperation Treaty (PCT). An international (PCT) application generally has the same effect as a regular national patent application in each PCT-member country. The PCT process **simplifies** the filing of patent applications on the same invention in member countries, but **does not result** in a grant of "an international patent" and does not eliminate the need of applicants to file additional documents and fees in countries where patent protection is desired.

Almost every country has its own patent law, and a person desiring a patent in a particular country must make an application for patent in that country in accordance with its particular laws. Since the laws of many countries differ in various respects from the patent law of the United States, applicants are advised to seek guidance from specific foreign countries to ensure that patent rights are not lost prematurely.

Applicants also are advised that in the case of inventions made in the United States, the Director of the USPTO must issue a license before applicants can apply for a patent in a foreign country. The filing of a U.S. patent application serves as a request for a foreign filing license. The application's filing receipt contains further information and guidance as to the status of applicant's license for foreign filing.

Applicants may wish to consult the USPTO booklet, "General Information Concerning Patents" (specifically, the section entitled "Treaties and Foreign Patents") for more information on timeframes and deadlines for filing foreign patent applications. The guide is available either by contacting the USPTO Contact Center at 800-786-9199, or it can be viewed on the USPTO website at http://www.uspto.gov/web/offices/pac/doc/general/index.html.

For information on preventing theft of your intellectual property (patents, trademarks and copyrights), you may wish to consult the U.S. Government website, http://www.stopfakes.gov. Part of a Department of Commerce initiative, this website includes self-help "toolkits" giving innovators guidance on how to protect intellectual property in specific countries such as China, Korea and Mexico. For questions regarding patent enforcement issues, applicants may call the U.S. Government hotline at 1-866-999-HALT (1-866-999-4158).

LICENSE FOR FOREIGN FILING UNDER
Title 35, United States Code, Section 184
Title 37, Code of Federal Regulations, 5.11 & 5.15

GRANTED

The applicant has been granted a license under 35 U.S.C. 184, if the phrase "IF REQUIRED, FOREIGN FILING LICENSE GRANTED" followed by a date appears on this form. Such licenses are issued in all applications where the conditions for issuance of a license have been met, regardless of whether or not a license may be required as set forth in 37 CFR 5.15. The scope and limitations of this license are set forth in 37 CFR 5.15(a) unless an earlier license has been issued under 37 CFR 5.15(b). The license is subject to revocation upon written notification. The date indicated is the effective date of the license, unless an earlier license of similar scope has been granted under 37 CFR 5.13 or 5.14.

This license is to be retained by the licensee and may be used at any time on or after the effective date thereof unless it is revoked. This license is automatically transferred to any related applications(s) filed under 37 CFR 1.53(d). This license is not retroactive.

The grant of a license does not in any way lessen the responsibility of a licensee for the security of the subject matter as imposed by any Government contract or the provisions of existing laws relating to espionage and the national security or the export of technical data. Licensees should apprise themselves of current regulations especially with respect to certain countries, of other agencies, particularly the Office of Defense Trade Controls, Department of State (with respect to Arms, Munitions and Implements of War (22 CFR 121-128)); the Bureau of Industry and Security, Department of Commerce (15 CFR parts 730-774); the Office of Foreign Assets Control, Department of Treasury (31 CFR Parts 500+) and the Department of Energy.

NOT GRANTED

No license under 35 U.S.C. 184 has been granted at this time, if the phrase "IF REQUIRED, FOREIGN FILING LICENSE GRANTED" DOES NOT appear on this form. Applicant may still petition for a license under 37 CFR 5.12, if a license is desired before the expiration of 6 months from the filing date of the application. If 6 months has lapsed from the filing date of this application and the licensee has not received any indication of a secrecy order under 35 U.S.C. 181, the licensee may foreign file the application pursuant to 37 CFR 5.15(b).

UNITED STATES PATENT AND TRADEMARK OFFICE

Commissioner for Patents
United States Patent and Trademark Office
P.O. Box 1450
Alexandria, VA 22313-1450
www.uspto.gov

VAN DYKE, GARDNER, LINN & BURKHART, LLP
SUITE 207
2851 CHARLEVOIX DRIVE, S.E.
GRAND RAPIDS MI 49546

COPY MAILED

DEC 2 1 2007

OFFICE OF PETITIONS

In re Application of	:	
Baur, et al.	:	
Application No. 60/783,496	:	DECISION GRANTING PETITION
Filed: March 17, 2006	:	
Attorney Docket No. DON01 P-1272	:	

This is a decision on the petition filed October 11, 2007, under 37 CFR 1.10 requesting that the above-cited application be accorded a filing date of March 17, 2006, rather than the presently accorded filing date of March 18, 2006.

Petitioner alleges that the application was deposited with the Express Mail Service on March 17, 2006. In support of the allegation, the petition is accompanied by a copy of the Express Mail postcard with a tracking number EV700000870US showing a "date-in" of March 17, 2006. The tracking number cited is the same number found on the application transmittal sheet that accompanied the original application papers. The evidence is convincing that the application papers were deposited on March 17, 2006.

In view of the above, the petition is granted. The new filing date for the above-cited application is March 17, 2006. The amount of $130.00 remitted October 11, 2007, will be refunded, in due course.

The Office of Patent Application Processing will accord the application a filing date of March 17, 2006, and issue a corrected filing receipt.

Any inquiries related to this decision should be directed to the undersigned at (571)272-3222.

Kenya A. McLaughlin
Petitions Attorney
Office of Petitions

UNITED STATES PATENT AND TRADEMARK OFFICE

COMMISSIONER FOR PATENTS
UNITED STATES PATENT AND TRADEMARK OFFICE
P.O. BOX 1450
ALEXANDRIA, VA 22313-1450
WWW.USPTO.GOV

Paper No. None

ROETZEL AND ANDRESS
222 SOUTH MAIN STREET
AKRON OH 44308

COPY MAILED
SEP 25 2006
OFFICE OF PETITIONS

In re Application of :
Scott Collins et al. :
Application No. 60/784,061 : DECISION ON PETITION
Filed: March 17, 2006 : UNDER 37 C.F.R. §1.182
Attorney Docket No. 089498- :
0613.PRV :
Title: ETHYLENE POLYMERIZATION :
USING DISCRETE NI(II) :
IMINOPHOSPHONAMIDE COMPLEXES :

This is a decision on the petition under 37 C.F.R. §1.182, filed May 5, 2006, requesting that the above-identified application, including Figures 1, 2, 3, 4, and 5, be accorded a filing date of March 17, 2006.

The application was deposited on March 17, 2006. However, on April 14, 2006, the Office of Initial Patent Examination (OIPE) mailed a "Notice of Omitted Item(s) in a Provisional Application-Filing Date Granted" (notice) stating that the application had been accorded a filing date, and advising applicants that it appeared that Figures 1, 2, 3, 4, and 5 had been omitted on filing. The notice set a two-month period for response.

On May 5, 2006, Petitioner filed the present petition, and has asserted that drawings were provided on filing, embedded within the specification.

The electronic file has been reviewed, and it is clear that these figures were present on filing.

As such, the petition is **GRANTED**.

The application, as originally filed, including Figures 1, 2, 3, 4, and 5, is entitled to a filing date of March 17, 2006.

The notice of April 14, 2006 was sent in error, and is hereby **VACATED**. As such, no petition fee is necessary, and the petition fee has not been charged to Petitioner's Deposit Account.

OIPE will be made aware of this decision, so that the application can receive further processing with a filing date of March 17, 2006, including Figures 1, 2, 3, 4, and 5, using the application papers filed on that date. Office records will indicate that Figures 1, 2, 3, 4, and 5 were present on filing.

Telephone inquiries regarding *this decision* should be directed to the undersigned at (571) 272-3225[1]. All other inquiries concerning examination procedures or status of the application should be directed to the Technology Center.

Paul Shanoski
Senior Attorney
Office of Petitions
United States Patent and Trademark Office

---

1 Petitioner will note that all practice before the Office should be in writing, and the action of the Office will be based exclusively on the written record in the Office. See 37 C.F.R. §1.2. As such, Petitioner is reminded that no telephone discussion may be controlling or considered authority for Petitioner's further action(s).

UNITED STATES PATENT AND TRADEMARK OFFICE

Commissioner for Patents
United States Patent and Trademark Office
P.O. Box 1450
Alexandria, VA 22313-1450
www.uspto.gov

OSTROLENK FABER GERB & SOFFEN
1180 AVENUE OF THE AMERICAS
NEW YORK NY 10036-8403

COPY MAILED

AUG 07 2006

OFFICE OF PETITIONS

In re Application of	:
Paul	: DECISION GRANTING
Application No. 60/784,197	: PETITION
Filed: March 22, 2006	:
Attorney Docket No. PP/4348-93	:

This is a decision on the petition filed April 21, 2006 (certificate of mailing date April 18, 2006) under 37 CFR 1.10(d), requesting that the above-identified application be accorded a filing date of March 21, 2006, rather than the presently accorded filing date of March 22, 2006

Petitioner requests the earlier filing date on the basis that the application was deposited in Express Mail service on March 21, 2006, pursuant to the requirements of 37 CFR 1.10. The petition is accompanied by, *inter alia*, a USPS Pickup Service Statement for Express Mail, Priority Mail, or Parcel Post that lists a package associated with Express Mail label no. EV606197231US among others. The same Express Mail label number is referenced in the Express Mail Certificate attached to the Provisional Application for Patent Cover Sheet found in the application file.

Paragraph (d) of 37 CFR 1.10 states that:

> Any person filing correspondence under this section that was received by the Office and delivered by the "Express Mail Post Office to Addressee" service of the USPS, who can show that the "date-in" on the "Express Mail" mailing label or other official notation entered by the USPS was incorrectly entered or omitted by the USPS, may petition the Director to accord the correspondence a filing date as of the date the correspondence is shown to have been deposited with the USPS, provided that:
>
> (1) The petition is filed promptly after the person becomes aware that the Office has accorded, or will accord, a filing date based upon an incorrect entry by the USPS;
>
> (2) The number of the "Express Mail" mailing label was placed on the paper(s) or fee(s) that constitute the correspondence prior to the original mailing by "Express Mail"; and
>
> (3) The petition includes a showing which establishes, to the satisfaction of the Director, that the requested filing date was the date the correspondence was deposited in "Express Mail Post Office to Addressee" service prior to the last scheduled pickup for that day. Any showing pursuant to this paragraph must be corroborated by evidence from

the USPS or that came into being after deposit and within one business day of the deposit of the correspondence in the "Express Mail Post Office to Addressee" service of the USPS.

A grantable petition under 37 CFR 1.10(d) must include "a showing which establishes, to the satisfaction of the Director, that the requested filing date was the date the correspondence was deposited in "Express Mail Post Office to Addressee" service prior to the last scheduled pickup for that day." In addition, the showing "must be corroborated by evidence from the USPS or that came into being after deposit and within one business day of the deposit of the correspondence in the 'Express Mail Post Office to Addressee' service of the USPS."

Petitioner has submitted a copy of a USPS Pickup Service Statement for Express Mail, Priority Mail, or Parcel Post that lists Express Mail label no. EV606197231. The statement lists 3/21/6 as the date of pickup and is signed by a postal employee. In addition, petitioner has submitted a printout of a USPS Track and Confirm computer record that shows a package associated with Express Mail label no. EV606197231US was accepted by the USPS on March 21, 2006. The petition is accompanied by the persuasive corroborating evidence required by the rule. Accordingly, the petition is granted. No petition fee has been or will be charged in connection with this matter.

The application is being returned to the Office of Initial Patent Examination for correction of the filing date to **March 21, 2006**.

Any inquiries related to this decision should be directed to the undersigned at (571) 272-3230.

Shirene Willis Brantley

Shirene Willis Brantley
Senior Petitions Attorney
Office of Petitions

UNITED STATES PATENT AND TRADEMARK OFFICE

Commissioner for Patents
United States Patent and Trademark Office
P.O. Box 1450
Alexandria, VA 22313-1450
www.uspto.gov

SHEILA BIALKIN
22 MALLOW RD.
EAST ROCKAWAY NY 11518

COPY MAILED

MAR 3 0 2007

OFFICE OF PETITIONS

In re Application of :
Bialkin and Brodar :
Application No. 60/784,319 :
Filed: March 21, 2006 : ON PETITION
Attorney Docket No. N/A :
For: "ZOOM BUGGY" WHEEL CHAIR COUPE :

This is a decision on the correspondence, filed February 28, 2007, alleging non-receipt of the April 16, 2006 Notice to File Missing Parts of Provisional Application. The correspondence will be treated under 37 CFR 1.181 to withdraw the holding of abandonment of the above-identified application.

The constructive petition under 37 CFR 1.181 is **DISMISSED**.

Any further reconsideration must be submitted within TWO (2) MONTHS from the mail date of this decision. Extensions of time under 37 CFR 1.136(a) are permitted. This is **not** final agency action within the meaning of 5 U.S.C. § 704.

The petition is dismissed and the merits of the petition will not be addressed because the correspondence is not signed by a proper party.

37 CFR 1.33(b) states that any amendments and other papers filed in an application must be signed by (1) an appointed registered attorney or agent; (2) a registered attorney or agent not appointed, but acting in a representative capacity, (3) an assignee under 3.71(b); or (4) all of the named inventors.

The petition is signed by Sheila Bialkin. Sheila Bialkin has not provided an attorney/agent registration number. Sheila Bialkin has not shown that she is an authorized representative of an assignee who has right to take action. It is noted that Sheila Bialkin is one of two joint inventors.

In short, Sheila Bialkin has not established that she is permitted to file amendments and other papers in this application on her own.

In any reconsideration petition, petitioner is encouraged to either (a) submit Sheila Bialkin's registration number; (b) submit an appropriate 3.73(b) statement on behalf of the assignee establishing ownership of the invention, signed by a person authorized to act on behalf of the assignee (the person authorized to act on behalf of the assignee should be Sheila Bialkin and in this manner, the signature on instant petition will be ratified); or (c) submit a petition signed by both joint inventors.

Further correspondence with respect to this matter should be addressed as follows:

By mail:
Mail Stop PETITION
Commissioner for Patents
Post Office Box 1450
Alexandria, VA 22313-1450

By hand:
U.S. Patent and Trademark Office
Customer Service Window, Mail Stop Petition
Randolph Building
401 Dulany Street
Alexandria, VA 22314

By FAX: (571) 273-8300 - ATTN: Office of Petitions

Telephone inquiries may be directed to the undersigned at (571) 272-3230.

Shirene Willis Brantley

Shirene Willis Brantley
Senior Petitions Attorney
Office of Petitions

UNITED STATES PATENT AND TRADEMARK OFFICE

COMMISSIONER FOR PATENTS
UNITED STATES PATENT AND TRADEMARK OFFICE
P.O. BOX 1450
ALEXANDRIA, VA 22313-1450
www.uspto.gov

E I DU PONT DE NEMOURS AND COMPANY
LEGAL PATENT RECORDS CENTER
BARLEY MILL PLAZA 25/1128
4417 LANCASTER PIKE
WILMINGTON, DE 19805

COPY MAILED
JUL 0 6 2006
OFFICE OF PETITIONS

In re Application of	:	
Allen, et al.	:	
Filed: March 22, 2006	:	ON PETITION
Application No. 60/784,618	:	
Dkt. No.: BB1555 US PRV1	:	

The above-identified application has been referred to the Office of Petitions for consideration of the "PETITION UNDER 37 C.F.R. § 1.53(E)", filed June 2, 2006.

The petition is **DISMISSED**.

The application was filed March 22, 2006. On April 25, 2006, the Office of Initial Patent Examination mailed a Notice of Incomplete Nonprovisional Application ("Notice"). The Notice indicated that the application had not been accorded a filing date because the application was deposited without drawings as required under 35 USC 113 (first sentence). The Notice indicated the filing date of the application would be date of receipt of the omitted items. Any assertion that the omitted items were in fact submitted or are not necessary for a filing date must be by way of petition.

Petitioners argue that drawings are not necessary for an understanding of the claimed invention.

As stated in MPEP 601.01(f), it is the practice of the PTO to treat a provisional application that contains at least some disclosure of a process or method (or composition) as an application for which a drawing is not necessary for an understanding of the invention under 35 USC 113 (first sentence).

Moreover, MPEP 601.01(f) states that a nonprovisional application having at least one claim, or a provisional application having at least some disclosure, directed to the subject matter discussed above for which a drawing is usually not considered essential for a filing date, describing drawing figure(s) in the specification, but filed without drawings will

be treated as an application filed without all of the drawing figures referred to in the specification as discussed in MPEP 601.01(g), so long as the application contains something that can be construed as a written description and the names of all the inventors. Should the Technology Center determine that drawings are necessary under 35 U.S.C. 113 (first sentence) the filing date issue will be reconsidered by the USPTO.

A review of the official file reveals that the instant application includes at least one process, method, or composition claim. As it is USPTO practice to treat a provisional application that contains at least some disclosure of a process or method (or composition) as an application for which a drawing is not necessary, the application, as submitted, was entitled to a filing date of March 22, 2006. Thus, the instant petition to accord the application a filing date is unnecessary and the Notice of Incomplete Application mailed April 25, 2006 was mailed in error and is hereby withdrawn.

The application will be processed with only the papers present on March 22, 2006, without drawings as part of the original disclosure.

No fee is due in connection with this matter. Petitioners may request a refund of the previously submitted petition fee by writing to the Finance Office, Refund Section. A copy of this decisions should accompany any request for refund.

The application is being returned to the Office of Initial Patent Examination for further processing with a filing date of March 22, 2006 using only the papers present on that day and without entry of any drawings into the record.

Telephone inquiries related to this decision may be directed to the undersigned at (571) 272-3205.

Alesia M. Brown
Petitions Attorney
Office of Petitions

UNITED STATES PATENT AND TRADEMARK OFFICE

Commissioner for Patents
United States Patent and Trademark Office
P.O. Box 1450
Alexandria, VA 22313-1450
www.uspto.gov

AKERMAN SENTERFITT
P.O. BOX 3188
WEST PALM BEACH FL 33402-3188

COPY MAILED
AUG 28 2006
OFFICE OF PETITIONS

In re Application of :
Hummel, et al. :
Application No. 60/784,623 : ON PETITION
Filed: March 10, 2006 :
Attorney Docket No. 5853-658 :
FOR: DIFFERENTIAL REFLECTION SPECTROSCOPY FOR DETECTING EXPLOSIVES

This is a decision on the petition under 37 CFR 1.10(c), filed April 11, 2006 (certificate of mailing date April 6, 2006), requesting that the above-identified application be accorded a filing date of March 10, 2006.

Petitioners assumed that the Office accorded the above-identified application a March 13, 2006 filing date because an Office generated date stamp affixed to the application's postcard receipt cited March 13, 2006 as the date of receipt of the application. However, the application was processed with a March 10, 2006 filing date.

Please find enclosed a copy of the filing receipt mailed on May 12, 2006 that lists March 10, 2006 as the filing date for the above-identified application.

Since the filing date is correct, the petition under 37 CFR 1.10(c) is **dismissed as moot**. No petition fee has been or will be charged.

Telephone inquiries concerning this matter should be directed to the undersigned at (571)272-3230.

Shirene Willis Brantley
Senior Petitions Attorney
Office of Petitions
Office of the Deputy Commissioner
for Patent Examination Policy

enclosure: copy of May 12, 2006 filing receipt for application no. 60/784,623

UNITED STATES PATENT AND TRADEMARK OFFICE

UNITED STATES DEPARTMENT OF COMMERCE
United States Patent and Trademark Office
Address: COMMISSIONER FOR PATENTS
P.O. Box 1450
Alexandria, Virginia 22313-1450
www.uspto.gov

APPL NO.	FILING OR 371 (c) DATE	ART UNIT	FIL FEE REC'D	ATTY.DOCKET NO	DRAWINGS	TOT CLMS	IND CLMS
60/784,623	03/10/2006		100	5853-658	4		

CONFIRMATION NO. 4143

30448
AKERMAN SENTERFITT
P.O. BOX 3188
WEST PALM BEACH, FL 33402-3188

FILING RECEIPT

OC000000018773215

Date Mailed: 05/12/2006

Receipt is acknowledged of this provisional Patent Application. It will not be examined for patentability and will become abandoned not later than twelve months after its filing date. Be sure to provide the U.S. APPLICATION NUMBER, FILING DATE, NAME OF APPLICANT, and TITLE OF INVENTION when inquiring about this application. Fees transmitted by check or draft are subject to collection. Please verify the accuracy of the data presented on this receipt. **If an error is noted on this Filing Receipt, please mail to the Commissioner for Patents P.O. Box 1450 Alexandria Va 22313-1450. Please provide a copy of this Filing Receipt with the changes noted thereon. If you received a "Notice to File Missing Parts" for this application, please submit any corrections to this Filing Receipt with your reply to the Notice. When the USPTO processes the reply to the Notice, the USPTO will generate another Filing Receipt incorporating the requested corrections (if appropriate).**

Applicant(s)

Rolf E. Hummel, Gainesville, FL;
Paul H. Holloway, Gainesville, FL;
Ann Marie Fuller, Gainesville, FL;
Clause Schoellhorn, Gainesville, FL;

Power of Attorney: The patent practitioners associated with Customer Number **30448**.

Projected Publication Date: None, application is not eligible for pre-grant publication

Non-Publication Request: Not applicable

Early-Publication Request: Not applicable

**** SMALL ENTITY ****

Title

Differential reflection spectroscopy for detecting explosives

PROTECTING YOUR INVENTION OUTSIDE THE UNITED STATES

Since the rights granted by a U.S. patent extend only throughout the territory of the United States and have no

effect in a foreign country, an inventor who wishes patent protection in another country must apply for a patent in a specific country or in regional patent offices. Applicants may wish to consider the filing of an international application under the Patent Cooperation Treaty (PCT). An international (PCT) application generally has the same effect as a regular national patent application in each PCT-member country. The PCT process **simplifies** the filing of patent applications on the same invention in member countries, but **does not result** in a grant of "an international patent" and does not eliminate the need of applicants to file additional documents and fees in countries where patent protection is desired.

Almost every country has its own patent law, and a person desiring a patent in a particular country must make an application for patent in that country in accordance with its particular laws. Since the laws of many countries differ in various respects from the patent law of the United States, applicants are advised to seek guidance from specific foreign countries to ensure that patent rights are not lost prematurely.

Applicants also are advised that in the case of inventions made in the United States, the Director of the USPTO must issue a license before applicants can apply for a patent in a foreign country. The filing of a U.S. patent application serves as a request for a foreign filing license. The application's filing receipt contains further information and guidance as to the status of applicant's license for foreign filing.

Applicants may wish to consult the USPTO booklet, "General Information Concerning Patents" (specifically, the section entitled "Treaties and Foreign Patents") for more information on timeframes and deadlines for filing foreign patent applications. The guide is available either by contacting the USPTO Contact Center at 800-786-9199, or it can be viewed on the USPTO website at http://www.uspto.gov/web/offices/pac/doc/general/index.html.

For information on preventing theft of your intellectual property (patents, trademarks and copyrights), you may wish to consult the U.S. Government website, http://www.stopfakes.gov. Part of a Department of Commerce initiative, this website includes self-help "toolkits" giving innovators guidance on how to protect intellectual property in specific countries such as China, Korea and Mexico. For questions regarding patent enforcement issues, applicants may call the U.S. Government hotline at 1-866-999-HALT (1-866-999-4158).

LICENSE FOR FOREIGN FILING UNDER
Title 35, United States Code, Section 184
Title 37, Code of Federal Regulations, 5.11 & 5.15

GRANTED

The applicant has been granted a license under 35 U.S.C. 184, if the phrase "IF REQUIRED, FOREIGN FILING LICENSE GRANTED" followed by a date appears on this form. Such licenses are issued in all applications where the conditions for issuance of a license have been met, regardless of whether or not a license may be required as set forth in 37 CFR 5.15. The scope and limitations of this license are set forth in 37 CFR 5.15(a) unless an earlier license has been issued under 37 CFR 5.15(b). The license is subject to revocation upon written notification. The date indicated is the effective date of the license, unless an earlier license of similar scope has been granted under 37 CFR 5.13 or 5.14.

This license is to be retained by the licensee and may be used at any time on or after the effective date thereof unless it is revoked. This license is automatically transferred to any related applications(s) filed under 37 CFR 1.53(d). This license is not retroactive.

The grant of a license does not in any way lessen the responsibility of a licensee for the security of the subject matter as imposed by any Government contract or the provisions of existing laws relating to espionage and the national security or the export of technical data. Licensees should apprise themselves of current regulations especially with respect to certain countries, of other agencies, particularly the Office of Defense Trade Controls, Department of State (with respect to Arms, Munitions and Implements of War (22 CFR 121-128)); the Bureau of Industry and Security, Department of Commerce (15 CFR parts 730-774); the Office of Foreign Assets Control, Department of Treasury (31 CFR Parts 500+) and the Department of Energy.

NOT GRANTED

No license under 35 U.S.C. 184 has been granted at this time, if the phrase "IF REQUIRED, FOREIGN FILING LICENSE GRANTED" DOES NOT appear on this form. Applicant may still petition for a license under 37 CFR 5.12, if a license is desired before the expiration of 6 months from the filing date of the application. If 6 months has lapsed from the filing date of this application and the licensee has not received any indication of a secrecy order under 35 U.S.C. 181, the licensee may foreign file the application pursuant to 37 CFR 5.15(b).

UNITED STATES PATENT AND TRADEMARK OFFICE

Commissioner for Patents
United States Patent and Trademark Office
P.O. Box 1450
Alexandria, VA 22313-1450
www.uspto.gov

Andrew D. Maslow, Esq.
Memorial Sloan-Kettering Cancer Center
Office of Industrial Affairs
1275 York Avenue
New York NY 10021-6007

COPY MAILED

OCT 2 2 2007

OFFICE OF PETITIONS

ON PETITION

In re Application of :
Polly D. Gregor et al. :
Application No. 60/785,393 :
Filed: March 23, 2006 :
Attorney Docket No. SK-1230-PRO :

This is a decision on the petition under 37 CFR 1.137(b), filed January 13, 2007, to revive the above-identified application.

The petition is **GRANTED**.

The application became abandoned for failure to reply in a timely manner to the Notice to File Missing Parts of Nonprovisional Application (Notice), mailed April 17, 2006. The Notice set a period for reply of two (2) months from the mail date of the Notice. No extensions of time under the provisions of 37 CFR 1.136(a) was obtained. Accordingly, the application became abandoned on June 18, 2006.

The petition satisfies the requirements of 37 CFR 1.137(b) in that petitioner has supplied (1) the reply in the form of a data sheet identifying the city and state of each inventor; (2) the petition fee of $750; and (3) an adequate statement of unintentional delay.

A provisional application may be revived so as to be pending for a period no longer than 12 months from it's filing date. This application is hereby deemed revived until March 23, 2007, when it went abandoned as a matter of law.

Telephone inquiries concerning this decision should be directed to the undersigned at (571) 272-2991.

The application file is being referred to the Office of Initial Patent Examination for further processing.

Liana Walsh
Petitions Examiner
Office of Petitions

UNITED STATES PATENT AND TRADEMARK OFFICE

Commissioner for Patents
United States Patent and Trademark Office
P.O. Box 1450
Alexandria, VA 22313-1450
www.uspto.gov

JJGJr: 07-06

Paper No: __

COPY MAILED

AUG 0 2 2006

OFFICE OF PETITIONS

MEDLEN & CARROLL, LLP
SUITE 350
101 HOWARD STREET
SAN FRANCISCO CA 94105

In re Application of	:	
Melotto, et al.	:	
Application No. 60/785,476	:	DECISION
Filed: 23 March, 2006	:	
Attorney Docket No.: MSU-10824	:	

This is a decision on the letters of request filed on 10 and 11 April and 20 June, 2006, considered as a petition under 37 C.F.R. §1.10, seeking for the above-identified application a filing date of 23 March, 2006, rather than the presently accorded filing date of 24 March, 2006.

The petition is **DISMISSED without prejudice**–it appears that the petition was submitted improvidently by one who is neither:

- the applicant/assignee; nor
- registered to practice before the Office.

BACKGROUND AND ANALYSIS

The instant application was received by the Office and accorded a filing date of 24 March, 2006.

An individual identifying herself as Lisa M. Austin, Ph.D, but who provides no registration number identifying her as one registered to practice before the Office, submitted on 10 and 11

April and 20 June, 2006, a series of letters, considered as petitions under 37 C.F.R. §1.10. Further, a search of Office records evidences no individual identified as Lisa M. Austin, Ph.D, who is registered to practice before the Office as of the date of this writing. (See: 37 C.F.R. §10.1(r).)

Moreover, the Office certainly cannot communicate with one not registered to practice. (See: 37 C.F.R. §10.47.)

Once the instant matter is properly presented by the applicant/assignee and/or their counsel registered to practice before the Office, the substance of the matter will be considered.

Out of an abundance of caution, Petitioners always are reminded that those registered to practice *and* all others who make representations before the Office are reminded to inquire into the underlying facts of representations made to the Office and support averments with the appropriate documentation–since all owe to the Office the continuing duty to disclose.[1]

---

[1] See supplement of 17 June, 1999. The Patent and Trademark Office is relying on petitioner's duty of candor and good faith and accepting a statement made by Petitioner. See Changes to Patent Practice and Procedure, 62 Fed. Reg. at 53160 and 53178, 1203 Off. Gaz. Pat. Office at 88 and 103 (responses to comments 64 and 109)(applicant obligated under 37 C.F.R. §10.18 to inquire into the underlying facts and circumstances when providing statements to the Patent and Trademark Office).

Specifically, the regulations at 37 C.F.R. §10.18 provide:

§ 10.18 Signature and certificate for correspondence filed in the Patent and Trademark Office.
(a) For all documents filed in the Office in patent, trademark, and other non-patent matters, except for correspondence that is required to be signed by the applicant or party, each piece of correspondence filed by a practitioner in the Patent and Trademark Office must bear a signature by such practitioner complying with the provisions of §1.4(d), §1.4(e), or § 2.193(c)(1) of this chapter.
(b) By presenting to the Office (whether by signing, filing, submitting, or later advocating) any paper, the party presenting such paper, whether a practitioner or non-practitioner, is certifying that—

(1) All statements made therein of the party's own knowledge are true, all statements made therein on information and belief are believed to be true, and all statements made therein are made with the knowledge that whoever, in any matter within the jurisdiction of the Patent and Trademark Office, knowingly and willfully falsifies, conceals, or covers up by any trick, scheme, or device a material fact, or makes any false, fictitious or fraudulent statements or representations, or makes or uses any false writing or document knowing the same to contain any false, fictitious or fraudulent statement or entry, shall be subject to the penalties set forth under 18 U.S.C. 1001, and that violations of this paragraph may jeopardize the validity of the application or document, or the validity or enforceability of any patent, trademark registration, or certificate resulting therefrom; and

(2) To the best of the party's knowledge, information and belief, formed after an inquiry reasonable under the circumstances, that —

(i) The paper is not being presented for any improper purpose, such as to harass someone or to cause unnecessary delay or needless increase in the cost of prosecution before the Office;

(ii) The claims and other legal contentions therein are warranted by existing law or by a nonfrivolous argument for the extension, modification, or reversal of existing law or the establishment of new law;

(iii) The allegations and other factual contentions have evidentiary support or, if specifically so identified, are likely to have evidentiary support after a reasonable opportunity for further investigation or discovery; and

(iv) The denials of factual contentions are warranted on the evidence, or if specifically so identified, are reasonably based on a lack of information or belief.

(c) Violations of paragraph (b)(1) of this section by a practitioner or non-practitioner may jeopardize the validity of the application or document, or the validity or enforceability of any patent, trademark registration, or certificate resulting therefrom. Violations of any of paragraphs (b)(2)(i) through (iv) of this section are, after notice and reasonable opportunity to respond, subject to such sanctions as deemed appropriate by the Commissioner, or the Commissioner's designee, which may include, but are not limited to, any combination of —

(1) Holding certain facts to have been established;
(2) Returning papers;
(3) Precluding a party from filing a paper, or presenting or contesting an issue;
(4) Imposing a monetary sanction;
(5) Requiring a terminal disclaimer for the period of the delay; or

Petitioner is reminded that the controlling regulations are set forth at under 37 C.F.R. §1.10.[2]

---

(6) Terminating the proceedings in the Patent and Trademark Office.
(d) Any practitioner violating the provisions of this section may also be subject to disciplinary action. See § 10.23(c)(15).
[Added 50 FR 5175, Feb. 6, 1985, effective Mar. 8, 1985; para. (a) revised, 58 FR 54494, Oct. 22, 1993, effective Nov. 22, 1993; paras. (a) & (b) revised, paras. (c) & (d) added, 62 FR 53131, Oct. 10, 1997, effective Dec. 1, 1997; para. (a) revised, 69 FR 56481, Sept. 21, 2004, effective Oct. 21, 2004]

[2] The regulations at 37 C.F.R. §1.10 provide:
§ 1.10 Filing of papers and fees by "Express Mail."
(a) Any correspondence received by the Patent and Trademark Office (Office) that was delivered by the "Express Mail Post Office to Addressee" service of the United States Postal Service (USPS) will be considered filed in the Office on the date of deposit with the USPS. The date of deposit with the USPS is shown by the "date-in" on the "Express Mail" mailing label or other official USPS notation. If the USPS deposit date cannot be determined, the correspondence will be accorded the Office receipt date as the filing date. See § 1.6(a).
(b) Correspondence should be deposited directly with an employee of the USPS to ensure that the person depositing the correspondence receives a legible copy of the "Express Mail" mailing label with the "date-in" clearly marked. Persons dealing indirectly with the employees of the USPS (such as by deposit in an "Express Mail" drop box) do so at the risk of not receiving a copy of the "Express Mail" mailing label with the desired "date-in" clearly marked. The paper(s) or fee(s) that constitute the correspondence should also include the "Express Mail" mailing label number thereon. See paragraphs (c), (d) and (e) of this section.
(c) Any person filing correspondence under this section that was received by the Office and delivered by the "Express Mail Post Office to Addressee" service of the USPS, who can show that there is a discrepancy between the filing date accorded by the Office to the correspondence and the date of deposit as shown by the "date-in" on the "Express Mail" mailing label or other official USPS notation, may petition the Commissioner to accord the correspondence a filing date as of the "date-in" on the "Express Mail" mailing label or other official USPS notation, provided that:
(1) The petition is filed promptly after the person becomes aware that the Office has accorded, or will accord, a filing date other than the USPS deposit date;
(2) The number of the "Express Mail" mailing label was placed on the paper(s) or fee(s) that constitute the correspondence prior to the original mailing by "Express Mail;" and
(3) The petition includes a true copy of the "Express Mail" mailing label showing the "date-in," and of any other official notation by the USPS relied upon to show the date of deposit.
(d) Any person filing correspondence under this section that was received by the Office and delivered by the "Express Mail Post Office to Addressee" service of the USPS, who can show that the "date-in" on the "Express Mail" mailing label or other official notation entered by the USPS was incorrectly entered or omitted by the USPS, may petition the Commissioner to accord the correspondence a filing date as of the date the correspondence is shown to have been deposited with the USPS, provided that:
(1) The petition is filed promptly after the person becomes aware that the Office has accorded, or will accord, a filing date based upon an incorrect entry by the USPS;
(2) The number of the "Express Mail" mailing label was placed on the paper(s) or fee(s) that constitute the correspondence prior to the original mailing by "Express Mail"; and
(3) The petition includes a showing which establishes, to the satisfaction of the Commissioner, that the requested filing date was the date the correspondence was deposited in the "Express Mail Post Office toAddressee" service prior to the last scheduled pickup for that day. Any showing pursuant to this paragraph must be corroborated by evidence from the USPS or that came into being after deposit and within one business day of the deposit of the correspondence in the "Express Mail Post Office to Addressee" service of the USPS.
(e) Any person mailing correspondence addressed as set out in § 1.1(a) to the Office with sufficient postage utilizing the "Express Mail Post Office to Addressee" service of the USPS but not received by the Office, may petition the Commissioner to consider such correspondence filed in the Office on the USPS deposit date, provided that:
(1) The petition is filed promptly after the person becomes aware that the Office has no evidence of receipt of the correspondence;
(2) The number of the "Express Mail" mailing label was placed on the paper(s) or fee(s) that constitute the correspondence prior to the original mailing by "Express Mail";
(3) The petition includes a copy of the originally deposited paper(s) or fee(s) that constitute the correspondence showing the number of the "Express Mail" mailing label thereon, a copy of any returned postcard receipt, a copy of the "Express Mail" mailing label showing the "date-in," a copy of any other official notation by the USPS relied upon to show the date of deposit, and, if the requested filing date is a date other than the "date-in" on the "Express Mail" mailing label or other official notation entered by the USPS, a showing pursuant to paragraph (d)(3) of this section that the requested filing date was the date the correspondence was deposited in the "Express Mail Post Office to Addressee" service prior to the last scheduled pickup for that day; and
(4) The petition includes a statement which establishes, to the satisfaction of the Commissioner, the original deposit of the correspondence and that the copies of the correspondence, the copy of the "Express Mail" mailing label, the copy of any returned postcard receipt, and any official notation entered by the USPS are true copies of the originally mailed correspondence, original "Express Mail" mailing label, returned postcard receipt, and official notation entered by the USPS.
(f) The Office may require additional evidence to determine if the correspondence was deposited as "Express Mail" with the USPS on the date in question.

The petition is **dismissed** to await a properly submitted petition in this regard.

While telephone inquiries regarding this decision may be directed to the undersigned at (571) 272-3214, it is noted that all practice before the Office is in writing (see: 37 C.F.R. §1.2[3]) and the proper authority for action on any matter in this regard are the statutes (35 U.S.C.), regulations (37 C.F.R.) and the commentary on policy (MPEP). Therefore, no telephone discussion may be controlling or considered authority for Petitioner's action(s).

John J. Gillon, Jr.
Senior Attorney
Office of Petitions

[48 Fed. Reg. 2708, Jan. 20, 1983, added effective Feb. 27, 1983; 48 Fed. Reg. 4285, Jan. 31, 1983, paras. (a) & (c), 49 Fed. Reg. 552, Jan. 4, 1984, effective Apr. 1, 1984; paras. (a)-(c) revised and paras. (d) - (f) added, 61 Fed. Reg. 56439, Nov. 1, 1996, effective Dec. 2, 1996; paras. (d) & (e) revised, 62 Fed. Reg. 53131, Oct. 10, 1997, effective Dec. 1, 1997]

[3] The regulations at 37 C.F.R. §1.2 provide:

§1.2 Business to be transacted in writing.

All business with the Patent and Trademark Office should be transacted in writing.The personal attendance of applicants or their attorneys or agents at the Patent and Trademark Office is unnecessary. The action of the Patent and Trademark Office will be based exclusively on the written record in the Office. No attention will be paid to any alleged oral promise, stipulation,or understanding in relation to which there is disagreement or doubt.

UNITED STATES PATENT AND TRADEMARK OFFICE

Commissioner for Patents
United States Patent and Trademark Office
P.O. Box 1450
Alexandria, VA 22313-1450
www.uspto.gov

KNOBBE MARTENS OLSON & BEAR LLP
2040 MAIN STREET
FOURTEENTH FLOOR
IRVINE CA 92614

COPY MAILED
SEP 27 2006
OFFICE OF PETITIONS

In re Application of	:	
Wade H. Brown	:	DECISION ON PETITION
Application No. 60/785,749	:	
Filed: March 24, 2006	:	
Atty Docket No. CBOARD.007PR2	:	

This is a decision on the "PETITION REGARDING OMITTED ITEM" filed July 3, 2006. Petitioner requests, in essence, that the above-identified application be accorded a filing date of March 24, 2006, with figure 1 considered a part of the original application disclosure.

Application papers in the above-identified application were deposited on March 24, 2006. However, on May 3, 2006, the Office mailed a "Notice of Omitted Item(s) in a Provisional Application," advising applicant that the application papers had been accorded a filing date[1]; however, figure 1 described in the specification appeared to have been omitted.

In response, applicant timely filed the instant petition. Applicant maintains that figure 1 was deposited with the application. In support thereof, applicant submitted a copy of their return postcard from the USPTO. Applicant also submitted a copy of figure 1.

A postcard receipt, which itemizes and properly identifies the items, which are being filed, serves as *prima facie* evidence of receipt in the Office of all items listed thereon on the date stamped thereon by the Office. See MPEP 503. A review of

[1] As the application included at least one method claim, the application was treated as one that does not require drawings. See MPEP 601.01(f).

petitioner's postcard receipt reveals that: 1) it was date stamped as received by the Office on March 24, 2006 and the papers filed therewith assigned provisional application No. 60/785749; 2) it specifically identifies the items being filed, including "1 sheets of Drawings" and 3) it lacks any annotation of non-receipt of any item denoted on the postcard. Thus, petitioner has shown that the items denoted were filed on March 24, 2006.

It is concluded that petitioner has shown that figure 1 was among the items present in the application on the date of deposit and should be included in the original application disclosure.

Accordingly, the petition is **GRANTED**.

Given the basis for granting the petition, the petition fee is being refunded to Deposit Account No. 11-1410, as authorized.

The application is being returned to the Office of Initial Patent Examination (OIPE) for:

- processing with a filing date of March 24, 2006, using the application papers received in the Office and presently accorded that date; and figure 1 re-supplied on petition filed July 3, 2006.

Applicant will receive appropriate notifications regarding the fees owed, if any, and other information in due course from OIPE.

Telephone inquiries specific to this decision should be directed to the undersigned at (571) 272-3219.

Nancy Johnson
Senior Petitions Attorney
Office of Petitions

UNITED STATES PATENT AND TRADEMARK OFFICE

UNITED STATES DEPARTMENT OF COMMERCE
United States Patent and Trademark Office
Address: COMMISSIONER FOR PATENTS
P.O. Box 1450
Alexandria, Virginia 22313-1450
www.uspto.gov

APPL NO.	FILING OR 371 (c) DATE	ART UNIT	FIL FEE REC'D	ATTY.DOCKET NO	DRAWINGS	TOT CLMS	IND CLMS
60/785,921	03/24/2006		200	10841/L/W-C/W-C/CKIM	3		

CONFIRMATION NO. 9851

CORRECTED FILING RECEIPT

OC000000020211207

41161
DUGAN & DUGAN, PC
55 SOUTH BROADWAY
TARRYTOWN, NY 10591

Date Mailed: 08/28/2006

Receipt is acknowledged of this provisional Patent Application. It will not be examined for patentability and will become abandoned not later than twelve months after its filing date. Be sure to provide the U.S. APPLICATION NUMBER, FILING DATE, NAME OF APPLICANT, and TITLE OF INVENTION when inquiring about this application. Fees transmitted by check or draft are subject to collection. Please verify the accuracy of the data presented on this receipt. **If an error is noted on this Filing Receipt, please mail to the Commissioner for Patents P.O. Box 1450 Alexandria Va 22313-1450. Please provide a copy of this Filing Receipt with the changes noted thereon. If you received a "Notice to File Missing Parts" for this application, please submit any corrections to this Filing Receipt with your reply to the Notice. When the USPTO processes the reply to the Notice, the USPTO will generate another Filing Receipt incorporating the requested corrections (if appropriate).**

Applicant(s)

Wei Lu, Fremont, CA;
Jianshe Tang, San Jose, CA;
Alexander Sou-Kang Ko, Santa Clara, CA;
Nelson A. Yee, Redwood City, CA;
Bo Xie, Sunnyvale, CA;
John Tseng-Chung Lee, San Jose, CA;
Rick R. Endo, San Carlos, CA;

Power of Attorney:
Brian Dugan--41720

If Required, Foreign Filing License Granted: 04/28/2006

The country code and number of your priority application, to be used for filing abroad under the Paris Convention, is US60/785,921

Projected Publication Date: None, application is not eligible for pre-grant publication

Non-Publication Request: Not applicable

Early-Publication Request: Not applicable

Title

Methods and apparatus for cleaning a substrate

PROTECTING YOUR INVENTION OUTSIDE THE UNITED STATES

Since the rights granted by a U.S. patent extend only throughout the territory of the United States and have no effect in a foreign country, an inventor who wishes patent protection in another country must apply for a patent in a specific country or in regional patent offices. Applicants may wish to consider the filing of an international application under the Patent Cooperation Treaty (PCT). An international (PCT) application generally has the same effect as a regular national patent application in each PCT-member country. The PCT process **simplifies** the filing of patent applications on the same invention in member countries, but **does not result** in a grant of "an international patent" and does not eliminate the need of applicants to file additional documents and fees in countries where patent protection is desired.

Almost every country has its own patent law, and a person desiring a patent in a particular country must make an application for patent in that country in accordance with its particular laws. Since the laws of many countries differ in various respects from the patent law of the United States, applicants are advised to seek guidance from specific foreign countries to ensure that patent rights are not lost prematurely.

Applicants also are advised that in the case of inventions made in the United States, the Director of the USPTO must issue a license before applicants can apply for a patent in a foreign country. The filing of a U.S. patent application serves as a request for a foreign filing license. The application's filing receipt contains further information and guidance as to the status of applicant's license for foreign filing.

Applicants may wish to consult the USPTO booklet, "General Information Concerning Patents" (specifically, the section entitled "Treaties and Foreign Patents") for more information on timeframes and deadlines for filing foreign patent applications. The guide is available either by contacting the USPTO Contact Center at 800-786-9199, or it can be viewed on the USPTO website at http://www.uspto.gov/web/offices/pac/doc/general/index.html.

For information on preventing theft of your intellectual property (patents, trademarks and copyrights), you may wish to consult the U.S. Government website, http://www.stopfakes.gov. Part of a Department of Commerce initiative, this website includes self-help "toolkits" giving innovators guidance on how to protect intellectual property in specific countries such as China, Korea and Mexico. For questions regarding patent enforcement issues, applicants may call the U.S. Government hotline at 1-866-999-HALT (1-866-999-4158).

LICENSE FOR FOREIGN FILING UNDER
Title 35, United States Code, Section 184
Title 37, Code of Federal Regulations, 5.11 & 5.15

GRANTED

The applicant has been granted a license under 35 U.S.C. 184, if the phrase "IF REQUIRED, FOREIGN FILING LICENSE GRANTED" followed by a date appears on this form. Such licenses are issued in all applications where the conditions for issuance of a license have been met, regardless of whether or not a license may be required as set forth in 37 CFR 5.15. The scope and limitations of this license are set forth in 37 CFR 5.15(a) unless an earlier license has been issued under 37 CFR 5.15(b). The license is subject to revocation upon written notification. The date indicated is the effective date of the license, unless an earlier license of similar scope has been granted under 37 CFR 5.13 or 5.14.

This license is to be retained by the licensee and may be used at any time on or after the effective date thereof unless it is revoked. This license is automatically transferred to any related applications(s) filed under 37 CFR 1.53(d). This license is not retroactive.

The grant of a license does not in any way lessen the responsibility of a licensee for the security of the subject matter as imposed by any Government contract or the provisions of existing laws relating to espionage and the

national security or the export of technical data. Licensees should apprise themselves of current regulations especially with respect to certain countries, of other agencies, particularly the Office of Defense Trade Controls, Department of State (with respect to Arms, Munitions and Implements of War (22 CFR 121-128)); the Bureau of Industry and Security, Department of Commerce (15 CFR parts 730-774); the Office of Foreign Assets Control, Department of Treasury (31 CFR Parts 500+) and the Department of Energy.

NOT GRANTED

No license under 35 U.S.C. 184 has been granted at this time, if the phrase "IF REQUIRED, FOREIGN FILING LICENSE GRANTED" DOES NOT appear on this form. Applicant may still petition for a license under 37 CFR 5.12, if a license is desired before the expiration of 6 months from the filing date of the application. If 6 months has lapsed from the filing date of this application and the licensee has not received any indication of a secrecy order under 35 U.S.C. 181, the licensee may foreign file the application pursuant to 37 CFR 5.15(b).

UNITED STATES PATENT AND TRADEMARK OFFICE

Commissioner for Patents
United States Patent and Trademark Office
P.O. Box 1450
Alexandria, VA 22313-1450
www.uspto.gov

JJGJr: 08-06

Paper No: __

COPY MAILED
SEP 1 1 2006
OFFICE OF PETITIONS

DUGAN & DUGAN, PC
55 SOUTH BROADWAY
TARRYTOWN NY 10591

In re Application of	:	
Lu, et al.	:	
Application No. 60/785,921	:	DECISION
Filed: 24 March, 2006	:	
Attorney Docket No.: 1084/L/W-C/W-C/CKIM	:	

This is a decision on the petition under 37 C.F.R. §1.10, filed on 16 June, 2006, seeking for the above-identified application a filing date of 24 March, 2006, rather than the presently accorded filing date of 23 March, 2006.

The petition is **GRANTED**.

BACKGROUND AND ANALYSIS

The instant application was received by the Office and accorded a filing date of 23 March, 2006.

The record reflects that:

- the instant application, averred to have been transmitted in the package bearing US Postal Service (USPS) Express Mail Label No. EV854243546US was received by the Office and given a filing date of 23 March, 2006;

- with the instant petition, filed on 16 June, 2006, Petitioner provided, *inter alia*, (a) a copy of the USPS Express Mail label bearing USPS Express Mail Label No. EV854243546US

with the hand-written "date in" of "3 24" and a date stamp of "MAR 24 2006";

- Petitioner apparently did not obtain and submit a copy of the USPS Track & Confirm statement bearing USPS Express Mail Label No. EV854243546US –a prudent practice to be undertaken within days after Petitioner expects delivery and which Petitioner would find beneficial for record keeping in all Express Mail shipments to the Office–however, the Office sought and obtained this material and placed it of record–and an indication of "ACCEPTANCE TARRYTOWN, NY 10591 03/24/06 5:56 pm."

Out of an abundance of caution, Petitioners always are reminded that those registered to practice *and* all others who make representations before the Office are reminded to inquire into the underlying facts of representations made to the Office and support averments with the appropriate documentation–since all owe to the Office the continuing duty to disclose.[1]

---

[1] See supplement of 17 June, 1999. The Patent and Trademark Office is relying on petitioner's duty of candor and good faith and accepting a statement made by Petitioner. See Changes to Patent Practice and Procedure, 62 Fed. Reg. at 53160 and 53178, 1203 Off. Gaz. Pat. Office at 88 and 103 (responses to comments 64 and 109)(applicant obligated under 37 C.F.R. §10.18 to inquire into the underlying facts and circumstances when providing statements to the Patent and Trademark Office).

Specifically, the regulations at 37 C.F.R. §10.18 provide:

§ 10.18 Signature and certificate for correspondence filed in the Patent and Trademark Office.
(a) For all documents filed in the Office in patent, trademark, and other non-patent matters, except for correspondence that is required to be signed by the applicant or party, each piece of correspondence filed by a practitioner in the Patent and Trademark Office must bear a signature by such practitioner complying with the provisions of §1.4(d), §1.4(e), or § 2.193(c)(1) of this chapter.
(b) By presenting to the Office (whether by signing, filing, submitting, or later advocating) any paper, the party presenting such paper, whether a practitioner or non-practitioner, is certifying that—

(1) All statements made therein of the party's own knowledge are true, all statements made therein on information and belief are believed to be true, and all statements made therein are made with the knowledge that whoever, in any matter within the jurisdiction of the Patent and Trademark Office, knowingly and willfully falsifies, conceals, or covers up by any trick, scheme, or device a material fact, or makes any false, fictitious or fraudulent statements or representations, or makes or uses any false writing or document knowing the same to contain any false, fictitious or fraudulent statement or entry, shall be subject to the penalties set forth under 18 U.S.C. 1001, and that violations of this paragraph may jeopardize the validity of the application or document, or the validity or enforceability of any patent, trademark registration, or certificate resulting therefrom; and

(2) To the best of the party's knowledge, information and belief, formed after an inquiry reasonable under the circumstances, that —

(i) The paper is not being presented for any improper purpose, such as to harass someone or to cause unnecessary delay or needless increase in the cost of prosecution before the Office;

(ii) The claims and other legal contentions therein are warranted by existing law or by a nonfrivolous argument for the extension, modification, or reversal of existing law or the establishment of new law;

(iii) The allegations and other factual contentions have evidentiary support or, if specifically so identified, are likely to have evidentiary support after a reasonable opportunity for further investigation or discovery; and

(iv) The denials of factual contentions are warranted on the evidence, or if specifically so identified, are reasonably based on a lack of information or belief.

(c) Violations of paragraph (b)(1) of this section by a practitioner or non-practitioner may jeopardize the validity of the application or document, or the validity or enforceability of any patent, trademark registration, or certificate resulting therefrom. Violations of any of paragraphs (b)(2)(i) through (iv) of this section are, after notice and reasonable opportunity to respond, subject to such sanctions as deemed appropriate by the Commissioner, or the Commissioner's designee, which may include, but are not limited to, any combination of —

(1) Holding certain facts to have been established;
(2) Returning papers;
(3) Precluding a party from filing a paper, or presenting or contesting an issue;
(4) Imposing a monetary sanction;
(5) Requiring a terminal disclaimer for the period of the delay; or
(6) Terminating the proceedings in the Patent and Trademark Office.

(d) Any practitioner violating the provisions of this section may also be subject to disciplinary action. See § 10.23(c)(15).
[Added 50 FR 5175, Feb. 6, 1985, effective Mar. 8, 1985; para. (a) revised, 58 FR 54494, Oct. 22, 1993, effective Nov. 22, 1993; paras. (a) &

The controlling regulations are set forth at under 37 C.F.R. §1.10.[2] A baseline requirement of

(b) revised, paras. (c) & (d) added, 62 FR 53131, Oct. 10, 1997, effective Dec. 1, 1997; para. (a) revised, 69 FR 56481, Sept. 21, 2004, effective Oct. 21, 2004]

[2] The regulations at 37 C.F.R. §1.10 provide:

§ 1.10 Filing of papers and fees by "Express Mail."

(a) Any correspondence received by the Patent and Trademark Office (Office) that was delivered by the "Express Mail Post Office to Addressee" service of the United States Postal Service (USPS) will be considered filed in the Office on the date of deposit with the USPS. The date of deposit with the USPS is shown by the "date-in" on the "Express Mail" mailing label or other official USPS notation. If the USPS deposit date cannot be determined, the correspondence will be accorded the Office receipt date as the filing date. See § 1.6(a).

(b) Correspondence should be deposited directly with an employee of the USPS to ensure that the person depositing the correspondence receives a legible copy of the "Express Mail" mailing label with the "date-in" clearly marked. Persons dealing indirectly with the employees of the USPS (such as by deposit in an "Express Mail" drop box) do so at the risk of not receiving a copy of the "Express Mail" mailing label with the desired "date-in" clearly marked. The paper(s) or fee(s) that constitute the correspondence should also include the "Express Mail" mailing label number thereon. See paragraphs (c), (d) and (e) of this section.

(c) Any person filing correspondence under this section that was received by the Office and delivered by the "Express Mail Post Office to Addressee" service of the USPS, who can show that there is a discrepancy between the filing date accorded by the Office to the correspondence and the date of deposit as shown by the "date-in" on the "Express Mail" mailing label or other official USPS notation, may petition the Commissioner to accord the correspondence a filing date as of the "date-in" on the "Express Mail" mailing label or other official USPS notation, provided that:

(1) The petition is filed promptly after the person becomes aware that the Office has accorded, or will accord, a filing date other than the USPS deposit date;

(2) The number of the "Express Mail" mailing label was placed on the paper(s) or fee(s) that constitute the correspondence prior to the original mailing by "Express Mail;" and

(3) The petition includes a true copy of the "Express Mail" mailing label showing the "date-in," and of any other official notation by the USPS relied upon to show the date of deposit.

(d) Any person filing correspondence under this section that was received by the Office and delivered by the "Express Mail Post Office to Addressee" service of the USPS, who can show that the "date-in" on the "Express Mail" mailing label or other official notation entered by the USPS was incorrectly entered or omitted by the USPS, may petition the Commissioner to accord the correspondence a filing date as of the date the correspondence is shown to have been deposited with the USPS, provided that:

(1) The petition is filed promptly after the person becomes aware that the Office has accorded, or will accord, a filing date based upon an incorrect entry by the USPS;

(2) The number of the "Express Mail" mailing label was placed on the paper(s) or fee(s) that constitute the correspondence prior to the original mailing by "Express Mail"; and

(3) The petition includes a showing which establishes, to the satisfaction of the Commissioner, that the requested filing date was the date the correspondence was deposited in the "Express Mail Post Office toAddressee" service prior to the last scheduled pickup for that day. Any showing pursuant to this paragraph must be corroborated by evidence from the USPS or that came into being after deposit and within one business day of the deposit of the correspondence in the "Express Mail Post Office to Addressee" service of the USPS.

(e) Any person mailing correspondence addressed as set out in § 1.1(a) to the Office with sufficient postage utilizing the "Express Mail Post Office to Addressee" service of the USPS but not received by the Office, may petition the Commissioner to consider such correspondence filed in the Office on the USPS deposit date, provided that:

(1) The petition is filed promptly after the person becomes aware that the Office has no evidence of receipt of the correspondence;

(2) The number of the "Express Mail" mailing label was placed on the paper(s) or fee(s) that constitute the correspondence prior to the original mailing by "Express Mail";

(3) The petition includes a copy of the originally deposited paper(s) or fee(s) that constitute the correspondence showing the number of the "Express Mail" mailing label thereon, a copy of any returned postcard receipt, a copy of the "Express Mail" mailing label showing the "date-in," a copy of any other official notation by the USPS relied upon to show the date of deposit, and, if the requested filing date is a date other than the "date-in" on the "Express Mail" mailing label or other official notation entered by the USPS, a showing pursuant to paragraph (d)(3) of this section that the requested filing date was the date the correspondence was deposited in the "Express Mail Post Office to Addressee" service prior to the last scheduled pickup for that day; and

(4) The petition includes a statement which establishes, to the satisfaction of the Commissioner, the original deposit of the correspondence and that the copies of the correspondence, the copy of the "Express Mail" mailing label, the copy of any returned postcard receipt, and any official notation entered by the USPS are true copies of the originally mailed correspondence, original "Express Mail" mailing label, returned postcard receipt, and official notation entered by the USPS.

(f) The Office may require additional evidence to determine if the correspondence was deposited as "Express Mail" with the USPS on the date in question.

[48 Fed. Reg. 2708, Jan. 20, 1983, added effective Feb. 27, 1983; 48 Fed. Reg. 4285, Jan. 31, 1983, paras. (a) & (c), 49 Fed. Reg. 552, Jan. 4, 1984, effective Apr. 1, 1984; paras. (a)-(c) revised and paras. (d) - (f) added, 61 Fed. Reg. 56439, Nov. 1, 1996, effective Dec. 2, 1996; paras. (d) & (e) revised, 62 Fed. Reg. 53131, Oct. 10, 1997, effective Dec. 1, 1997]

any petition under the Rule is that the petition "... is filed promptly after [Petitioner] becomes aware ..." that the filing date may not be correct.

The petition is **granted**, and the petition fee is waived.

The instant file is released to OIPE to correct the filing date so as to accord to the instant application a filing date of 24 March, 2006, and to mail to Petitioner a corrected filing receipt reflecting a filing date of 24 March, 2006.

While telephone inquiries regarding this decision may be directed to the undersigned at (571) 272-3214, it is noted that all practice before the Office is in writing (see: 37 C.F.R. §1.2[3]) and the proper authority for action on any matter in this regard are the statutes (35 U.S.C.), regulations (37 C.F.R.) and the commentary on policy (MPEP). Therefore, no telephone discussion may be controlling or considered authority for Petitioner's action(s).

John J. Gillon, Jr.
Senior Attorney
Office of Petitions

---

[3] The regulations at 37 C.F.R. §1.2 provide:
§1.2 Business to be transacted in writing.
All business with the Patent and Trademark Office should be transacted in writing.The personal attendance of applicants or their attorneys or agents at the Patent and Trademark Office is unnecessary. The action of the Patent and Trademark Office will be based exclusively on the written record in the Office. No attention will be paid to any alleged oral promise, stipulation,or understanding in relation to which there is disagreement or doubt.

UNITED STATES PATENT AND TRADEMARK OFFICE

UNITED STATES DEPARTMENT OF COMMERCE
United States Patent and Trademark Office
Address: COMMISSIONER FOR PATENTS
P.O. Box 1450
Alexandria, Virginia 22313-1450
www.uspto.gov

APPL NO.	FILING OR 371(c) DATE	ART UNIT	FIL FEE REC'D	ATTY.DOCKET NO	TOT CLMS	IND CLMS
60/786,113	03/15/2006		100	20592-002P01		

CONFIRMATION NO. 1682

CORRECTED FILING RECEIPT

OC000000023676758

26161
FISH & RICHARDSON PC
P.O. BOX 1022
MINNEAPOLIS, MN 55440-1022

Date Mailed: 05/03/2007

Receipt is acknowledged of this provisional Patent Application. It will not be examined for patentability and will become abandoned not later than twelve months after its filing date. Be sure to provide the U.S. APPLICATION NUMBER, FILING DATE, NAME OF APPLICANT, and TITLE OF INVENTION when inquiring about this application. Fees transmitted by check or draft are subject to collection. Please verify the accuracy of the data presented on this receipt. **If an error is noted on this Filing Receipt, please mail to the Commissioner for Patents P.O. Box 1450 Alexandria Va 22313-1450. Please provide a copy of this Filing Receipt with the changes noted thereon. If you received a "Notice to File Missing Parts" for this application, please submit any corrections to this Filing Receipt with your reply to the Notice. When the USPTO processes the reply to the Notice, the USPTO will generate another Filing Receipt incorporating the requested corrections (if appropriate).**

Applicant(s)

Josh Migliazzo, Cambridge, MA;
John Shapiro, Boston, MA;
Mario Schlosser, Boston, MA;

Power of Attorney:

Jan Rohlicek--43349

If Required, Foreign Filing License Granted: 04/10/2006

The country code and number of your priority application, to be used for filing abroad under the Paris Convention, is US60/786,113

Projected Publication Date: None, application is not eligible for pre-grant publication

Non-Publication Request: Not applicable

Early-Publication Request: Not applicable

**** SMALL ENTITY ****

Title

Managing advertising

PROTECTING YOUR INVENTION OUTSIDE THE UNITED STATES

Since the rights granted by a U.S. patent extend only throughout the territory of the United States and have no effect in a foreign country, an inventor who wishes patent protection in another country must apply for a patent in a specific country or in regional patent offices. Applicants may wish to consider the filing of an international application under the Patent Cooperation Treaty (PCT). An international (PCT) application generally has the same effect as a regular national patent application in each PCT-member country. The PCT process **simplifies** the filing of patent applications on the same invention in member countries, but **does not result** in a grant of "an international patent" and does not eliminate the need of applicants to file additional documents and fees in countries where patent protection is desired.

Almost every country has its own patent law, and a person desiring a patent in a particular country must make an application for patent in that country in accordance with its particular laws. Since the laws of many countries differ in various respects from the patent law of the United States, applicants are advised to seek guidance from specific foreign countries to ensure that patent rights are not lost prematurely.

Applicants also are advised that in the case of inventions made in the United States, the Director of the USPTO must issue a license before applicants can apply for a patent in a foreign country. The filing of a U.S. patent application serves as a request for a foreign filing license. The application's filing receipt contains further information and guidance as to the status of applicant's license for foreign filing.

Applicants may wish to consult the USPTO booklet, "General Information Concerning Patents" (specifically, the section entitled "Treaties and Foreign Patents") for more information on timeframes and deadlines for filing foreign patent applications. The guide is available either by contacting the USPTO Contact Center at 800-786-9199, or it can be viewed on the USPTO website at http://www.uspto.gov/web/offices/pac/doc/general/index.html.

For information on preventing theft of your intellectual property (patents, trademarks and copyrights), you may wish to consult the U.S. Government website, http://www.stopfakes.gov. Part of a Department of Commerce initiative, this website includes self-help "toolkits" giving innovators guidance on how to protect intellectual property in specific countries such as China, Korea and Mexico. For questions regarding patent enforcement issues, applicants may call the U.S. Government hotline at 1-866-999-HALT (1-866-999-4158).

LICENSE FOR FOREIGN FILING UNDER
Title 35, United States Code, Section 184
Title 37, Code of Federal Regulations, 5.11 & 5.15

GRANTED

The applicant has been granted a license under 35 U.S.C. 184, if the phrase "IF REQUIRED, FOREIGN FILING LICENSE GRANTED" followed by a date appears on this form. Such licenses are issued in all applications where the conditions for issuance of a license have been met, regardless of whether or not a license may be required as set forth in 37 CFR 5.15. The scope and limitations of this license are set forth in 37 CFR 5.15(a) unless an earlier license has been issued under 37 CFR 5.15(b). The license is subject to revocation upon written notification. The date indicated is the effective date of the license, unless an earlier license of similar scope has been granted under 37 CFR 5.13 or 5.14.

This license is to be retained by the licensee and may be used at any time on or after the effective date thereof unless it is revoked. This license is automatically transferred to any related applications(s) filed under 37 CFR 1.53(d). This license is not retroactive.

The grant of a license does not in any way lessen the responsibility of a licensee for the security of the subject matter as imposed by any Government contract or the provisions of existing laws relating to espionage and the

national security or the export of technical data. Licensees should apprise themselves of current regulations especially with respect to certain countries, of other agencies, particularly the Office of Defense Trade Controls, Department of State (with respect to Arms, Munitions and Implements of War (22 CFR 121-128)); the Bureau of Industry and Security, Department of Commerce (15 CFR parts 730-774); the Office of Foreign Assets Control, Department of Treasury (31 CFR Parts 500+) and the Department of Energy.

NOT GRANTED

No license under 35 U.S.C. 184 has been granted at this time, if the phrase "IF REQUIRED, FOREIGN FILING LICENSE GRANTED" DOES NOT appear on this form. Applicant may still petition for a license under 37 CFR 5.12, if a license is desired before the expiration of 6 months from the filing date of the application. If 6 months has lapsed from the filing date of this application and the licensee has not received any indication of a secrecy order under 35 U.S.C. 181, the licensee may foreign file the application pursuant to 37 CFR 5.15(b).

UNITED STATES PATENT AND TRADEMARK OFFICE

Commissioner for Patents
United States Patent and Trademark Office
P.O. Box 1450
Alexandria, VA 22313-1450
www.uspto.gov

HELLER EHRMAN LLP
275 MIDDLEFIELD ROAD
MENLO PARK CA 94025-3506

COPY MAILED
APR 2 8 2008
OFFICE OF PETITIONS

In re Application of	:	
McChesney, et al.	:	
Application No. 60/786,629	:	DECISION ON PETITIONS
Filed: March 27, 2006	:	
Attorney Docket No. 41428-0405 PR	:	

This is a decision on the petition under 37 CFR 1.59(b), filed June 11, 2007.

The petition to expunge is **DISMISSED**.

Any request for reconsideration of this decision must be submitted within **TWO (2) MONTHS** of the mailing date of this decision.

As set forth in MPEP 724.05, a petition to expunge information unintentionally submitted in an application (other than information forming part of the original disclosure) may be filed under 37 CFR 1.59(b), provided that:

(A) the Office can effect such return prior to the issuance of any patent on the application in issue;

(B) it is stated that the information submitted was unintentionally submitted and the failure to obtain its

return would cause irreparable harm to the party who submitted the information or to the party in interest on whose behalf the information was submitted;

(C) the information has not otherwise been made public;

(D) there is a commitment on the part of the petitioner to retain such information for the period of any patent with regard to which such information is submitted;

(E) it is established to the satisfaction of the Director that the information to be returned is not material information under 37 CFR 1.56; and

(F) the petition fee as set forth in 37 CFR 1.17(g) is included.

The instant petition has not satisfied item (B) above. While petitioner has stated that he did not intend to file the March 27, 2006 letter with the patent application, petitioner has not stated that the failure to obtain its return would cause irreparable harm.

Further correspondence with respect to this matter should be addressed as follows:

By mail: Mail Stop Petitions
Commissioner for Patents
P.O. Box 1450
Alexandria VA 22313-1450

By FAX: (571)273-8300
Attn: Office of Petitions

Telephone inquiries related to this decision should be directed to the undersigned at (571) 272-3219.

Cliff Congo
Petitions Attorney
Office of Petitions

UNITED STATES PATENT AND TRADEMARK OFFICE

Commissioner for Patents
United States Patent and Trademark Office
P.O. Box 1450
Alexandria, VA 22313-1450
www.uspto.gov

USDA-ARS-OFFICE OF TECHNOLOGY TRANSFER
PATENT ADVISORS OFFICE
WESTERN REGIONAL RESEARCH CENTER
800 BUCHANAN STREET
ALBANY CA 94710

COPY MAILED

JUL 0 3 2007

OFFICE OF PETITIONS

In re Application of	:	
Gregory M. Glenn et al	:	
Application No. 60/786,846	:	DECISION GRANTING
Filed: March 24, 2006	:	PETITION
Attorney Docket No. 0139.05	:	

This is a decision on the request, filed July 19, 2006 and supplemented on May 23, 2007, which is being treated as a petition requesting that the above-identified application be accorded a filing date of March 24, 2006, rather than the presently accorded date of March 27, 2006. The petition is properly treated as a petition under 37 CFR 1.10(d).

The petition is **GRANTED**.

Petitioner requests the earlier filing date on the basis that the application was purportedly deposited with Express Mail Service on March 24, 2006 pursuant to 37 CFR 1.10. The "date-in" on the copy of the Express Mail label receipt no. EF245978809US is illegible. The same Express Mail number is found on the original application papers located in the official file.

Paragraph (d) of 37 CFR 1.10 states that:

> Any person filing correspondence under this section that was received by the Office and delivered by the "Express Mail Post Office to Addressee" service of the USPS, who can show that the "date-in" on the "Express Mail" mailing label or other official notation entered by the USPS was incorrectly entered or omitted by the USPS, may petition the Director to accord the correspondence a filing date as of the date the correspondence is shown to have been deposited with the USPS, provided that

(1) The petition is filed promptly after the person becomes aware that the Office has accorded, or will accord, a filing date based upon an incorrect entry by the USPS;

(2) The number of the "Express Mail" mailing label was placed on the paper(s) or fee(s) that constitute the correspondence prior to the original mailing by "Express Mail"; and

(3) The petition includes a showing which establishes, to the satisfaction of the Director, that the requested filing date was the date the correspondence was deposited in the "Express Mail Post Office to Addressee" service prior to the last scheduled pickup for that day. Any showing pursuant to this paragraph must be corroborated by evidence from the USPS or that came into being after deposit and within one business day of the deposit of the correspondence in the "Express Mail Post Office to Addressee" service of the USPS.

Petitioner's evidence shows that the package in question was accepted on March 24, 2006, not March 27, 2006. Additionally, a copy of the USPS Track and Confirm for Express Mail Label No. EF245978809US shows an acceptance date of March 24, 2006 in Oakland CA.

This application file is being returned to the Office of Initial Patent Examination (OIPE) for correction of the filing date to **March 24, 2006,** and issuance of a corrected filing receipt.

Telephone inquiries relating to this decision should be directed to the undersigned at (571) 272-3208. Telephone inquiries related to OIPE processing should be directed to their hotline at (571) 272-4000.

Karen Creasy

Karen Creasy
Petitions Examiner
Office of Petitions

UNITED STATES PATENT AND TRADEMARK OFFICE

Commissioner for Patents
United States Patent and Trademark Office
P.O. Box 1450
Alexandria, VA 22313-1450
www.uspto.gov

BRIAN R. RAYVE
161 MAPLE DRIVE
PARK CITY, UT 84098

COPY MAILED

MAY 22 2007

OFFICE OF PETITIONS

In re Application of Jerry Krasinski Application No. 60/787,388 Filed: March 29, 2006 Attorney Docket No. 062-1-001	: : : : :	ON PETITION

This is a decision on the petition under 37 CFR 1.137(b), filed on December 4, 2006, to revive the above-identified application.

The application became abandoned for failure to reply in a timely manner to the Notice to File Missing Parts of Provisional Application mailed April 18, 2006.

The petition satisfies the requirements of 37 CFR 1.137(b), in that, petitioner has supplied (1) the reply in the form of a $25 surcharge for the late filing fee, $100 for the provisional application filing fee, and $50 for the bounced check fee; (2) the petition fee of $750; and (3) an adequate statement of unintentional delay. Therefore, the petition is **GRANTED**.

This application file is being referred to the Office of Initial Patent Examination.

Telephone inquiries concerning this decision should be directed to the undersigned at (571) 272-3226.

Andrea Smith
Petitions Examiner
Office of Petitions

UNITED STATES PATENT AND TRADEMARK OFFICE

Commissioner for Patents
United States Patent and Trademark Office
P.O. Box 1450
Alexandria, VA 22313-1450
www.uspto.gov

COURTNEY STANIFORD & GREGORY LLP
P.O. BOX 9686
SAN JOSE CA 95157

COPY MAILED

SEP 0 4 2008

In re Application of
Louay Jalloul et al.
Application No. 60/787,392
Filed: March 29, 2006
Attorney Docket No. BCEM.P024P

DECISION DISMISSING
PETITION UNDER 37 CFR 1.10(c)

This is a decision on the petition filed May 23, 2008, which is properly treated as a petition under 37 CFR 1.10(c) requesting that the above-identified application be considered as filed on March 30, 2006, which is the "date-in" or other official USPS notation on the Express Mail Mailing Label, instead of the currently accorded filing date of March 29, 2006

The petition is **DISMISSED**.

Any request for reconsideration of this decision should be filed within **TWO MONTHS** of the date of this decision in order to be considered timely (see 37 CFR 1.181(f)). No extensions of time pursuant to the provisions of 37 CFR 1.136 are permitted. If reconsideration is not requested within the time period specified above, this application will retain the currently accorded filing date of March 29, 2006.

37 CFR 1.10(c) sets forth procedures for filing a petition to the Director for a filing date as of the date of deposit with the USPS, where there is a discrepancy between the filing date initially accorded by the Office and the "date in" entered by the USPS or other official USPS notation.

To be grantable, a petition must:

(1) be filed promptly after the person becomes aware that the Office has accorded, or will accord, a filing date other than the USPS deposit date;

(2) include a showing that the number of the "Express Mail" mailing label was placed on each piece of correspondence prior to the original mailing; and

(3) include a true copy of the "Express Mail" mailing label showing the "date in" or other official notation by the USPS.

This petition lacks items (1) (2) and (3) above.

Petitioner requests the filing date of March 30, 2006 on the basis that there is a discrepancy between the filing date the USPTO has currently accorded this application and the "date-in" or other official USPS notation on the "Express Mail" mailing label.

In regard to item (1), applicant received a Notice to File Missing Parts of Provisional Application (Notice) on April 17, 2006. The instant petition was filed on May 23, 2008, more than two years after applicant became aware that the Office accorded a filing date for the above identified application as set forth on the Notice. This is not considered to meet the "promptly" requirement of 37 CFR 1.10(c)(1). Petitioner must satisfactorily explain the delay of over two years in filing the petition.

In regard to item (2), the petition includes an express mail number "EV 839877717 US" on the Provisional Application For Patent Cover Sheet. However, this number does not match the number on the Express Mail label which is "ED 839877714 US". Petitioner acknowledges this discrepancy and calls it merely a typographical error. Further, petitioner states that a search indicates no tracking record for the Express Mail number printed on the provisional application cover sheet which is treated as further evidence that the number on the cover sheet was in error. Even if the tracking number on the cover sheet was incorrect, there is no evidence to tie the tracking number on the Express Mail label to the above identified application since only the alleged erroneous tracking number appears on the cover sheet. Therefore item (2) is not met.

In regard to item (3) the petition includes a copy of an Express Mail mailing label with the "date in" as March 30, 2006. However, as noted above the tracking number on this included mailing label does not match the tracking number on the cover sheet of the application. Therefore the provided mailing label cannot be convincingly considered as the appropriate Express Mail mailing label as required for item (3).

Further correspondence with respect to this matter should be addressed as follows:

By Mail: Mail Stop PETITION
Commissioner for Patents
P. O. Box 1450
Alexandria, VA 22313-1450

By facsimile: (571) 273-8300
Attn: Office of Petitions

By hand: U. S. Patent and Trademark Office
Customer Service Window, Mail Stop Petitions
Randolph Building
401 Dulany Street
Alexandria, VA 22314

Telephone inquiries concerning this matter may be directed to Carl Friedman at (571) 272-6842.

David Bucci
Petitions Examiner
Office of Petitions

UNITED STATES PATENT AND TRADEMARK OFFICE

UNITED STATES DEPARTMENT OF COMMERCE
United States Patent and Trademark Office
Address: COMMISSIONER FOR PATENTS
P.O. Box 1450
Alexandria, Virginia 22313-1450
www.uspto.gov

APPL NO.	FILING OR 371 (c) DATE	ART UNIT	FIL FEE REC'D	ATTY.DOCKET NO	DRAWINGS	TOT CLMS	IND CLMS
60/787,562	03/29/2006		250	060969P1	1		

CONFIRMATION NO. 7285

CORRECTED FILING RECEIPT

OC000000019841576

23696
QUALCOMM INCORPORATED
5775 MOREHOUSE DR.
SAN DIEGO, CA 92121

Date Mailed: 08/01/2006

Receipt is acknowledged of this provisional Patent Application. It will not be examined for patentability and will become abandoned not later than twelve months after its filing date. Be sure to provide the U.S. APPLICATION NUMBER, FILING DATE, NAME OF APPLICANT, and TITLE OF INVENTION when inquiring about this application. Fees transmitted by check or draft are subject to collection. Please verify the accuracy of the data presented on this receipt. **If an error is noted on this Filing Receipt, please mail to the Commissioner for Patents P.O. Box 1450 Alexandria Va 22313-1450. Please provide a copy of this Filing Receipt with the changes noted thereon. If you received a "Notice to File Missing Parts" for this application, please submit any corrections to this Filing Receipt with your reply to the Notice. When the USPTO processes the reply to the Notice, the USPTO will generate another Filing Receipt incorporating the requested corrections (if appropriate).**

Applicant(s)

Yuriy Reznik, San Diego, CA;
Scott Albert Ludwin, San Diego, CA;
Hyukjune Chung, San Diego, CA;
Harinath Garudadri, San Diego, CA;
Naveen Srinivasamurthy, San Diego, CA;
Phoom Sagetong, San Diego, CA;

Power of Attorney:

Ramin Mobarhan--50182

If Required, Foreign Filing License Granted: 04/18/2006

The country code and number of your priority application, to be used for filing abroad under the Paris Convention, is US60/787,562

Projected Publication Date: None, application is not eligible for pre-grant publication

Non-Publication Request: Not applicable

Early-Publication Request: Not applicable

Title

Convergence of scaled and non-scaled IDCT architectures

PROTECTING YOUR INVENTION OUTSIDE THE UNITED STATES

Since the rights granted by a U.S. patent extend only throughout the territory of the United States and have no effect in a foreign country, an inventor who wishes patent protection in another country must apply for a patent in a specific country or in regional patent offices. Applicants may wish to consider the filing of an international application under the Patent Cooperation Treaty (PCT). An international (PCT) application generally has the same effect as a regular national patent application in each PCT-member country. The PCT process **simplifies** the filing of patent applications on the same invention in member countries, but **does not result** in a grant of "an international patent" and does not eliminate the need of applicants to file additional documents and fees in countries where patent protection is desired.

Almost every country has its own patent law, and a person desiring a patent in a particular country must make an application for patent in that country in accordance with its particular laws. Since the laws of many countries differ in various respects from the patent law of the United States, applicants are advised to seek guidance from specific foreign countries to ensure that patent rights are not lost prematurely.

Applicants also are advised that in the case of inventions made in the United States, the Director of the USPTO must issue a license before applicants can apply for a patent in a foreign country. The filing of a U.S. patent application serves as a request for a foreign filing license. The application's filing receipt contains further information and guidance as to the status of applicant's license for foreign filing.

Applicants may wish to consult the USPTO booklet, "General Information Concerning Patents" (specifically, the section entitled "Treaties and Foreign Patents") for more information on timeframes and deadlines for filing foreign patent applications. The guide is available either by contacting the USPTO Contact Center at 800-786-9199, or it can be viewed on the USPTO website at http://www.uspto.gov/web/offices/pac/doc/general/index.html.

For information on preventing theft of your intellectual property (patents, trademarks and copyrights), you may wish to consult the U.S. Government website, http://www.stopfakes.gov. Part of a Department of Commerce initiative, this website includes self-help "toolkits" giving innovators guidance on how to protect intellectual property in specific countries such as China, Korea and Mexico. For questions regarding patent enforcement issues, applicants may call the U.S. Government hotline at 1-866-999-HALT (1-866-999-4158).

LICENSE FOR FOREIGN FILING UNDER
Title 35, United States Code, Section 184
Title 37, Code of Federal Regulations, 5.11 & 5.15

GRANTED

The applicant has been granted a license under 35 U.S.C. 184, if the phrase "IF REQUIRED, FOREIGN FILING LICENSE GRANTED" followed by a date appears on this form. Such licenses are issued in all applications where the conditions for issuance of a license have been met, regardless of whether or not a license may be required as set forth in 37 CFR 5.15. The scope and limitations of this license are set forth in 37 CFR 5.15(a) unless an earlier license has been issued under 37 CFR 5.15(b). The license is subject to revocation upon written notification. The date indicated is the effective date of the license, unless an earlier license of similar scope has been granted under 37 CFR 5.13 or 5.14.

This license is to be retained by the licensee and may be used at any time on or after the effective date thereof unless it is revoked. This license is automatically transferred to any related applications(s) filed under 37 CFR 1.53(d). This license is not retroactive.

The grant of a license does not in any way lessen the responsibility of a licensee for the security of the subject matter as imposed by any Government contract or the provisions of existing laws relating to espionage and the national security or the export of technical data. Licensees should apprise themselves of current regulations

especially with respect to certain countries, of other agencies, particularly the Office of Defense Trade Controls, Department of State (with respect to Arms, Munitions and Implements of War (22 CFR 121-128)); the Bureau of Industry and Security, Department of Commerce (15 CFR parts 730-774); the Office of Foreign Assets Control, Department of Treasury (31 CFR Parts 500+) and the Department of Energy.

NOT GRANTED

No license under 35 U.S.C. 184 has been granted at this time, if the phrase "IF REQUIRED, FOREIGN FILING LICENSE GRANTED" DOES NOT appear on this form. Applicant may still petition for a license under 37 CFR 5.12, if a license is desired before the expiration of 6 months from the filing date of the application. If 6 months has lapsed from the filing date of this application and the licensee has not received any indication of a secrecy order under 35 U.S.C. 181, the licensee may foreign file the application pursuant to 37 CFR 5.15(b).

UNITED STATES PATENT AND TRADEMARK OFFICE

Commissioner for Patents
United States Patent and Trademark Office
P.O. Box 1450
Alexandria, VA 22313-1450
www.uspto.gov

COPY MAILED

JUL 25 2006

OFFICE OF PETITIONS

FISH & NEAVE IP GROUP
ROPES & GRAY LLP
ONE INTERNATIONAL PLACE
BOSTON, MA 02110-2624

In re Application of :
Engelward, et al. :
Application No. 60/787,867 : DECISION GRANTING PETITION
Filed: March 31, 2006 :
Attorney Docket No. MIN-P01-083 :

This is a decision on the petition filed June 7, 2006, under 37 CFR 1.10(c) requesting that the above-cited application be accorded a filing date of March 31, 2006, rather than the presently accorded filing date of March 29, 2006.

Petitioner alleges that the application was deposited with the Express Mail Service on March 31, 2006. In support of the allegation, the petition is accompanied by a copy of the Express Mail postcard with a tracking number EV843186715US showing a "date-in" of March 31, 2006. The tracking number cited is the same number found on the application transmittal sheet that accompanied the original application papers. The evidence is convincing that the application papers were deposited on March 31, 2006.

In view of the above, the petition is granted. The new filing date for the above-cited application is March 31, 2006.

The Office of Initial Patent Examination will further process the application with a filing date of March 31, 2006, and issue a corrected filing receipt.

Any inquiries related to this decision should be directed to the undersigned at (571) 272-3222.

Kenya A. McLaughlin
Petitions Attorney
Office of Petitions

UNITED STATES PATENT AND TRADEMARK OFFICE

Commissioner for Patents
United States Patent and Trademark Office
P.O. Box 1450
Alexandria, VA 22313-1450
www.uspto.gov

DICKSTEIN SHAPIRO MORIN & OSHINSKY LLP
1177 AVENUE OF THE AMERICAS (6TH AVENUE)
41 ST FL.
NEW YORK NY 10036-2714

COPY MAILED

JUN 0 5 2006

OFFICE OF PETITIONS

In re Application of	:
Gary R. Mankus	:
Application No. 60/787,904	: DECISION DISMISSING
Filed: March 31, 2006	: PETITION
Attorney Docket No: G8100.0003	:

This is a decision on the petition filed May 12, 2006, in response to the Notice of Omitted Items mailed April 14, 2006. The petition is being treated under 37 CFR 1.182.

On March 31, 2006, the application was filed. In response, the Office of Initial Patent Examination (OIPE) mailed a Notice of Omitted Items stating that while the application had been accorded a filing date of March 31, 2006, it appeared that Figure 2, as described in the specification, appeared to have been omitted from the application.

In response, petitioners argue that a complete application was present on March 31, 2006. Petitioners point to a postcard receipt as proof that a complete application was filed on March 31, 2006, including Figure 2.

The USPTO has a well-established and well-publicized practice of providing a receipt for papers filed in the USPTO to any applicant desiring a receipt. The practice requires that any paper for which a receipt is desired be filed in the USPTO with a self-addressed postcard identifying the paper. A postcard receipt which itemizes and properly identifies the papers which are being filed serves as prima facie evidence of receipt in the USPTO of all the items listed thereon on the date stamped thereon by the USPTO. See section 503, Manual of Patent Examining Procedure (MPEP 503).

The petition is DISMISSED.

No such copy of a postcard receipt has been found amongst the petition papers filed on May 12, 2006, thus, no corroborating evidence has been provided to establish that Figure 2 was filed with the application papers filed on March 31, 2006.

Petitioner may file a request for reconsideration and provide a copy of the postcard

receipt. Or, since the option to take the later filing date, *i.e.*, the date of submission of the omitted page(s) or drawing(s), is not available, if petitioners desire to have Figure 2 considered as part of the application, petitioners should simply file a new completed provisional application, including Figure 2.[1]

The application is being forwarded to the Office of Initial Patent Examination for further processing with a filing date of March 31, 2006, using the application papers filed on that date. The drawings filed with the petition will not be used and will not be added to this application in place of the drawings filed with the application on March 31, 2006.

Telephone inquiries concerning this matter may be directed to the undersigned Petitions Attorney at (571) 272-3212.

Patricia Faison-Ball

Patricia Faison-Ball
Senior Petitions Attorney
Office of Petitions

[1]MPEP 601.01(d). In view of the relatively low filing fee for provisional applications, and the USPTO's desire to minimize the processing of provisional applications, the USPTO will not grant petitions under 37 CFR 1.182 to accept omitted page(s) or drawing(s) and accord an application filing date as of the date of submission in provisional applications. The applicant should simply file a new completed provisional application. Id.

UNITED STATES PATENT AND TRADEMARK OFFICE

Commissioner for Patents
United States Patent and Trademark Office
P.O. Box 1450
Alexandria, VA 22313-1450
www.uspto.gov

Paper No.

Bodner & O'Rourke
425 Broadhollow Road
Melville NY 11747

COPY MAILED

JAN 08 2007

OFFICE OF PETITIONS

In re Application of :
David Abecassis : DECISION ON
Application No. 60/787,953 : PETITION
Filed: March 31, 2006 :
Title: NANOCOMPOSITE FLUROPOLYMER :
-POLYOLEFIN HYBRID MATERIAL AND :
METHODS FOR MANUFACTURING :

This is in response to the paper filed July 31, 2006, requesting that a second application filed with the above-referenced provisional application be accorded a new serial number for a nonprovisional application. This petition is treated pursuant to 37 CFR 1.182 as it requests relief not specifically provided for in the regulations.

The petition is **GRANTED**.

Application papers in the above-identified provisional application and in a nonprovisional application were deposited together on March 31, 2006. Both applications were accorded the application number 60/787,953. Applicant's return postcards were stamped with this number.

Upon receipt of the postcards, petitioner filed the instant petition requesting that the second application in the envelope be treated as a nonprovisional application and accorded a new serial number.

As it is undisputed that the application papers for both applications were deposited on March 31, 2006, there is no issue that both applications are considered received in the Office on March 31, 2006.

Further, the application papers have been separated and the second application is being treated as a nonprovisional application with a new serial number. On December 7, 2006, applicant was mailed a filing receipt advising him *inter alia* of the serial number accorded the second application.

The petition fee of $400 has been charged to Deposit Account No. 50-3070, as authorized.

This provisional application will maintain a filing date of March 31, 2006, using the application papers deposited on that date.

Telephone inquiries specific to this decision may be directed to the undersigned at (571) 272-3219.

Nancy Johnson
Senior Petitions Attorney
Office of Petitions

UNITED STATES PATENT AND TRADEMARK OFFICE

Commissioner for Patents
United States Patent and Trademark Office
P.O. Box 1450
Alexandria, VA 22313-1450
www.uspto.gov

Robert A. McLauchlan
Garlick, Harrison & Markison, LLP
P.O. Box 160727
Austin TX 78716-0727

COPY MAILED

SEP 1 8 2008

OFFICE OF PETITIONS

In re Application of	:	
Richard Koonwai Wang	:	
Application No. 60/788,270	:	ON PETITION
Filed: March 31, 2006	:	
Attorney Docket No. BP 5108	:	

This is a decision on the petition under the unintentional provisions of 37 CFR 1.137(b), filed January 10, 2007, to revive the above-identified application.

The petition is **GRANTED**.

The application became abandoned for failure to reply in a timely manner to the Notice to File Missing Parts of Provisional Application (Notice), mailed April 28, 2006. The Notice set a period for reply of two (2) months from the mail date of the Notice. No extensions of time under the provisions of 37 CFR 1.136(a) were timely obtained. Accordingly, the application became abandoned on June 29, 2006.

The petition satisfies the requirements of 37 CFR 1.137(b) in that petitioner has supplied (1) the reply that identifies either city and state or city and foreign country of the residence of each inventor and the name(s) of the inventor(s) and the surcharge required by the Notice (2) the petition fee of $1500, and (3) a proper statement of unintentional delay. Accordingly, the reply to the Notice is accepted as having been unintentionally delayed.

An extension of time under 37 CFR 1.136 must be filed prior to the expiration of the maximum extendable period for reply. *See* In re Application of S., 8 USPQ2d 1630, 1631 (Comm'r Pats. 1988). Since the $1,590 extension of time fee submitted with the petition on January 10, 2007, was subsequent to the maximum extendable period for reply, this fee is unnecessary and is being credited to the Deposit Account 50-3860, as authorized in the instant petition.

Telephone inquiries concerning this decision should be directed to undersigned at (571) 272-4914.

This application is being referred to Office of Patent Application Processing.

Ramesh Krishnamurthy
Petitions Examiner
Office of Petitions

UNITED STATES PATENT AND TRADEMARK OFFICE

Commissioner for Patents
United States Patent and Trademark Office
P.O. Box 1450
Alexandria, VA 22313-1450
www.uspto.gov

Garlick, Harrison & Markison, LLP
P.O. Box 160727
Austin TX 78716-0727

COPY MAILED

JUN 19 2007

OFFICE OF PETITIONS

In re Application of	:	
Mead	:	
Application No. 60/788,271	:	DECISION ON PETITION
Filed: March 31, 2006	:	
Attorney Docket No. BP 5085	:	

This is a decision on the petition under the unintentional provisions of 37 CFR 1.137(b), filed January 10, 2007, to revive the above-identified application.

The petition is **GRANTED**.

The application became abandoned for failure to reply in a timely manner to the Notice to File Missing Parts of Provisional Application (Notice), mailed May 1, 2006. The Notice set a period for reply of two (2) months from the mail date of the Notice. No proper extensions of time under the provisions of 37 CFR 1.136(a) were obtained. Accordingly, the application became abandoned on July 2, 2006. The filing of the present petition precedes the mailing of a Notice of Abandonment.

The petition satisfies the requirements of 37 CFR 1.137(b) in that petitioner has supplied (1) the reply in the form of a provisional application cover sheet and the $50.00 surcharge, (2) the petition fee of $1500.00; and (3) an adequate statement of unintentional delay.

An extension of time under 37 CFR 1.136 must be filed prior to the expiration of the maximum extendable period for reply. *See* In re Application of S., 8 USPQ2d 1630, 1631 (Comm'r Pats. 1988). Since the $1,590.00 extension of time fee submitted with the petition on January 10, 2007 was filed subsequent to the maximum extendable period for reply, this fee is unnecessary and will be credited to petitioner's deposit account.

Telephone inquiries concerning this decision should be directed to the undersigned at (571) 272-3230.

After the mailing of this decision, the application will be returned to the Office of Initial Patent Examination.

Shirene Willis Brantley

Shirene Willis Brantley
Senior Petitions Attorney
Office of Petitions

UNITED STATES PATENT AND TRADEMARK OFFICE

UNITED STATES DEPARTMENT OF COMMERCE
United States Patent and Trademark Office
Address: COMMISSIONER FOR PATENTS
P.O. Box 1450
Alexandria, Virginia 22313-1450
www.uspto.gov

APPL NO.	FILING OR 371 (c) DATE	ART UNIT	FIL FEE REC'D	ATTY.DOCKET NO	DRAWINGS	TOT CLMS	IND CLMS
60/788,562	03/30/2006		100	IL-11592	1		

CONFIRMATION NO. 4408

CORRECTED FILING RECEIPT

OC000000019005267

24981
THE REGENTS OF THE UNIVERSITY OF CALIFORNIA
LAWRENCE LIVERMORE NATIONAL LABORATORY
PO BOX 808, L-703
LIVERMORE, CA 94551-0808

Date Mailed: 05/30/2006

Receipt is acknowledged of this provisional Patent Application. It will not be examined for patentability and will become abandoned not later than twelve months after its filing date. Be sure to provide the U.S. APPLICATION NUMBER, FILING DATE, NAME OF APPLICANT, and TITLE OF INVENTION when inquiring about this application. Fees transmitted by check or draft are subject to collection. Please verify the accuracy of the data presented on this receipt. **If an error is noted on this Filing Receipt, please mail to the Commissioner for Patents P.O. Box 1450 Alexandria Va 22313-1450. Please provide a copy of this Filing Receipt with the changes noted thereon. If you received a "Notice to File Missing Parts" for this application, please submit any corrections to this Filing Receipt with your reply to the Notice. When the USPTO processes the reply to the Notice, the USPTO will generate another Filing Receipt incorporating the requested corrections (if appropriate).**

Applicant(s)

Faranak Nekoogar, San Ramon, CA;
Farid U. Dowla, Castro Valley, CA;
David M. Benzel, Livermore, CA;
Gregory E. Dallum, Livermore, CA;

Power of Attorney:

Michael Staggs–50938

If Required, Foreign Filing License Granted: 05/30/2006

The country code and number of your priority application, to be used for filing abroad under the Paris Convention, is US60/788,562

Projected Publication Date: None, application is not eligible for pre-grant publication

Non-Publication Request: Not applicable

Early-Publication Request: Not applicable

**** SMALL ENTITY ****

Title

Method for detecting multiple UWB passive tags in a RFID system

PROTECTING YOUR INVENTION OUTSIDE THE UNITED STATES

Since the rights granted by a U.S. patent extend only throughout the territory of the United States and have no effect in a foreign country, an inventor who wishes patent protection in another country must apply for a patent in a specific country or in regional patent offices. Applicants may wish to consider the filing of an international application under the Patent Cooperation Treaty (PCT). An international (PCT) application generally has the same effect as a regular national patent application in each PCT-member country. The PCT process **simplifies** the filing of patent applications on the same invention in member countries, but **does not result** in a grant of "an international patent" and does not eliminate the need of applicants to file additional documents and fees in countries where patent protection is desired.

Almost every country has its own patent law, and a person desiring a patent in a particular country must make an application for patent in that country in accordance with its particular laws. Since the laws of many countries differ in various respects from the patent law of the United States, applicants are advised to seek guidance from specific foreign countries to ensure that patent rights are not lost prematurely.

Applicants also are advised that in the case of inventions made in the United States, the Director of the USPTO must issue a license before applicants can apply for a patent in a foreign country. The filing of a U.S. patent application serves as a request for a foreign filing license. The application's filing receipt contains further information and guidance as to the status of applicant's license for foreign filing.

Applicants may wish to consult the USPTO booklet, "General Information Concerning Patents" (specifically, the section entitled "Treaties and Foreign Patents") for more information on timeframes and deadlines for filing foreign patent applications. The guide is available either by contacting the USPTO Contact Center at 800-786-9199, or it can be viewed on the USPTO website at http://www.uspto.gov/web/offices/pac/doc/general/index.html.

For information on preventing theft of your intellectual property (patents, trademarks and copyrights), you may wish to consult the U.S. Government website, http://www.stopfakes.gov. Part of a Department of Commerce initiative, this website includes self-help "toolkits" giving innovators guidance on how to protect intellectual property in specific countries such as China, Korea and Mexico. For questions regarding patent enforcement issues, applicants may call the U.S. Government hotline at 1-866-999-HALT (1-866-999-4158).

LICENSE FOR FOREIGN FILING UNDER
Title 35, United States Code, Section 184
Title 37, Code of Federal Regulations, 5.11 & 5.15

GRANTED

The applicant has been granted a license under 35 U.S.C. 184, if the phrase "IF REQUIRED, FOREIGN FILING LICENSE GRANTED" followed by a date appears on this form. Such licenses are issued in all applications where the conditions for issuance of a license have been met, regardless of whether or not a license may be required as set forth in 37 CFR 5.15. The scope and limitations of this license are set forth in 37 CFR 5.15(a) unless an earlier license has been issued under 37 CFR 5.15(b). The license is subject to revocation upon written notification. The date indicated is the effective date of the license, unless an earlier license of similar scope has been granted under 37 CFR 5.13 or 5.14.

This license is to be retained by the licensee and may be used at any time on or after the effective date thereof unless it is revoked. This license is automatically transferred to any related applications(s) filed under 37 CFR 1.53(d). This license is not retroactive.

The grant of a license does not in any way lessen the responsibility of a licensee for the security of the subject matter as imposed by any Government contract or the provisions of existing laws relating to espionage and the

national security or the export of technical data. Licensees should apprise themselves of current regulations especially with respect to certain countries, of other agencies, particularly the Office of Defense Trade Controls, Department of State (with respect to Arms, Munitions and Implements of War (22 CFR 121-128)); the Bureau of Industry and Security, Department of Commerce (15 CFR parts 730-774); the Office of Foreign Assets Control, Department of Treasury (31 CFR Parts 500+) and the Department of Energy.

NOT GRANTED

No license under 35 U.S.C. 184 has been granted at this time, if the phrase "IF REQUIRED, FOREIGN FILING LICENSE GRANTED" DOES NOT appear on this form. Applicant may still petition for a license under 37 CFR 5.12, if a license is desired before the expiration of 6 months from the filing date of the application. If 6 months has lapsed from the filing date of this application and the licensee has not received any indication of a secrecy order under 35 U.S.C. 181, the licensee may foreign file the application pursuant to 37 CFR 5.15(b).

UNITED STATES PATENT AND TRADEMARK OFFICE

UNITED STATES DEPARTMENT OF COMMERCE
United States Patent and Trademark Office
Address: COMMISSIONER FOR PATENTS
P.O. Box 1450
Alexandria, Virginia 22313-1450
www.uspto.gov

APPL NO.	FILING OR 371 (c) DATE	ART UNIT	FIL FEE REC'D	ATTY.DOCKET NO	DRAWINGS	TOT CLMS	IND CLMS
60/788,668	03/31/2006		100	6612-4788	10		

CONFIRMATION NO. 5644

CORRECTED FILING RECEIPT

OC000000018980784

28765
WINSTON & STRAWN LLP
1700 K STREET, N.W.
WASHINGTON, DC 20006

Date Mailed: 05/26/2006

Receipt is acknowledged of this provisional Patent Application. It will not be examined for patentability and will become abandoned not later than twelve months after its filing date. Be sure to provide the U.S. APPLICATION NUMBER, FILING DATE, NAME OF APPLICANT, and TITLE OF INVENTION when inquiring about this application. Fees transmitted by check or draft are subject to collection. Please verify the accuracy of the data presented on this receipt. **If an error is noted on this Filing Receipt, please mail to the Commissioner for Patents P.O. Box 1450 Alexandria Va 22313-1450. Please provide a copy of this Filing Receipt with the changes noted thereon. If you received a "Notice to File Missing Parts" for this application, please submit any corrections to this Filing Receipt with your reply to the Notice. When the USPTO processes the reply to the Notice, the USPTO will generate another Filing Receipt incorporating the requested corrections (if appropriate).**

Applicant(s)

William T. Digdon, Amherst, CANADA;
Vladimir Razbin, Ottawa, CANADA;

Power of Attorney:

Allan Fanucci--30256

If Required, Foreign Filing License Granted: 04/17/2006

The country code and number of your priority application, to be used for filing abroad under the Paris Convention, is US60/788,668

Projected Publication Date: None, application is not eligible for pre-grant publication

Non-Publication Request: Not applicable

Early-Publication Request: Not applicable

**** SMALL ENTITY ****

Title

Increasing the efficiency of combustion processes

PROTECTING YOUR INVENTION OUTSIDE THE UNITED STATES

Since the rights granted by a U.S. patent extend only throughout the territory of the United States and have no effect in a foreign country, an inventor who wishes patent protection in another country must apply for a patent in a specific country or in regional patent offices. Applicants may wish to consider the filing of an international application under the Patent Cooperation Treaty (PCT). An international (PCT) application generally has the same effect as a regular national patent application in each PCT-member country. The PCT process **simplifies** the filing of patent applications on the same invention in member countries, but **does not result** in a grant of "an international patent" and does not eliminate the need of applicants to file additional documents and fees in countries where patent protection is desired.

Almost every country has its own patent law, and a person desiring a patent in a particular country must make an application for patent in that country in accordance with its particular laws. Since the laws of many countries differ in various respects from the patent law of the United States, applicants are advised to seek guidance from specific foreign countries to ensure that patent rights are not lost prematurely.

Applicants also are advised that in the case of inventions made in the United States, the Director of the USPTO must issue a license before applicants can apply for a patent in a foreign country. The filing of a U.S. patent application serves as a request for a foreign filing license. The application's filing receipt contains further information and guidance as to the status of applicant's license for foreign filing.

Applicants may wish to consult the USPTO booklet, "General Information Concerning Patents" (specifically, the section entitled "Treaties and Foreign Patents") for more information on timeframes and deadlines for filing foreign patent applications. The guide is available either by contacting the USPTO Contact Center at 800-786-9199, or it can be viewed on the USPTO website at http://www.uspto.gov/web/offices/pac/doc/general/index.html.

For information on preventing theft of your intellectual property (patents, trademarks and copyrights), you may wish to consult the U.S. Government website, http://www.stopfakes.gov. Part of a Department of Commerce initiative, this website includes self-help "toolkits" giving innovators guidance on how to protect intellectual property in specific countries such as China, Korea and Mexico. For questions regarding patent enforcement issues, applicants may call the U.S. Government hotline at 1-866-999-HALT (1-866-999-4158).

LICENSE FOR FOREIGN FILING UNDER
Title 35, United States Code, Section 184
Title 37, Code of Federal Regulations, 5.11 & 5.15

GRANTED

The applicant has been granted a license under 35 U.S.C. 184, if the phrase "IF REQUIRED, FOREIGN FILING LICENSE GRANTED" followed by a date appears on this form. Such licenses are issued in all applications where the conditions for issuance of a license have been met, regardless of whether or not a license may be required as set forth in 37 CFR 5.15. The scope and limitations of this license are set forth in 37 CFR 5.15(a) unless an earlier license has been issued under 37 CFR 5.15(b). The license is subject to revocation upon written notification. The date indicated is the effective date of the license, unless an earlier license of similar scope has been granted under 37 CFR 5.13 or 5.14.

This license is to be retained by the licensee and may be used at any time on or after the effective date thereof unless it is revoked. This license is automatically transferred to any related applications(s) filed under 37 CFR 1.53(d). This license is not retroactive.

The grant of a license does not in any way lessen the responsibility of a licensee for the security of the subject matter as imposed by any Government contract or the provisions of existing laws relating to espionage and the national security or the export of technical data. Licensees should apprise themselves of current regulations especially with respect to certain countries, of other agencies, particularly the Office of Defense Trade Controls, Department of State (with respect to Arms, Munitions and Implements of War (22 CFR 121-128)); the Bureau of Industry and Security, Department of Commerce (15 CFR parts 730-774); the Office of Foreign Assets Control, Department of Treasury (31 CFR Parts 500+) and the Department of Energy.

NOT GRANTED

No license under 35 U.S.C. 184 has been granted at this time, if the phrase "IF REQUIRED, FOREIGN FILING LICENSE GRANTED" DOES NOT appear on this form. Applicant may still petition for a license under 37 CFR 5.12, if a license is desired before the expiration of 6 months from the filing date of the application. If 6 months has lapsed from the filing date of this application and the licensee has not received any indication of a secrecy order under 35 U.S.C. 181, the licensee may foreign file the application pursuant to 37 CFR 5.15(b).

UNITED STATES PATENT AND TRADEMARK OFFICE

Commissioner for Patents
United States Patent and Trademark Office
P.O. Box 1450
Alexandria, VA 22313-1450
www.uspto.gov

FOLEY HOAG, LLP
PATENT GROUP, WORLD TRADE CENTER WEST
155 SEAPORT BLVD
BOSTON MA 02110

COPY MAILED

NOV 07 2007

OFFICE OF PETITIONS

In re Application of :
David Robert Moller et al :
Application No. 60/788,859 :
Filed: April 3, 2006 :
Attorney Docket No. JHV-057.60 :

DECISION ON PETITION

This is a decision on the petition under 37 CFR 1.137(b), filed April 2, 2007, to revive the above-identified application. *See* 37 CFR 1.137(g).

The petition is **GRANTED.**

The application became abandoned for failure to reply in a timely manner to the Notice to File Missing Parts of Nonprovisional Application (Notice), mailed May 9, 2006, which required the submission of a provisional cover sheet or application data sheet identifying either the city and state or city and foreign country of the residence of each inventor. The Notice set a period for reply of two (2) months from the mail date of the Notice. No extensions of time were obtained under the provisions of 37 CFR 1.136(a). Accordingly, the application became abandoned on July 10, 2006. A Notice of Abandonment was mailed on January 11, 2007.

The petition satisfies the requirements of 37 CFR 1.137(b) in that petitioner has supplied (1) the required reply in the form of an application data sheet and $25 surcharge fee, (2) the petition fee of $750, and (3) a proper statement of unintentional delay. Accordingly, the failure to timely reply to the Notice of May 9, 2006 is accepted as being unintentionally delayed.

Petitioner is advised that, pursuant to 37 CFR 1.137(g), this provisional application will not be regarded as pending after twelve months from the filing date under any circumstances.

This application is being referred to the Office of Initial Patent Examination for further processing in accordance with this decision.

Telephone inquiries concerning this decision should be directed to the undersigned at (571) 272-3218.

Frances Hicks
Petitions Examiner
Office of Petitions

UNITED STATES PATENT AND TRADEMARK OFFICE

COMMISSIONER FOR PATENTS
UNITED STATES PATENT AND TRADEMARK OFFICE
P.O. BOX 1450
ALEXANDRIA, VA 22313-1450
www.uspto.gov

DORSEY & WHITNEY, LLP
INTELLECTUAL PROPERTY DEPARTMENT
370 SEVENTEENTH STREET
SUITE 4700
DENVER CO 80202-5647

COPY MAILED

JUL 26 2006

OFFICE OF PETITIONS

In re Application of :
Le Roy, et al. :
Application No. 60/788,912 :
Filed: April 3, 2006 :
Attorney Docket No. 186205/US/3 :
For: APPARATUS AND METHOD FOR OPTICAL INTERFERENCE FRINGE BASED INTEGRATED CIRCUIT PROCESSING

ON PETITION

This is a decision on the petition filed June 21, 2006, requesting, in effect, withdrawal of a Notice mailed May 12, 2006. the petition will be treated under 37 CFR 1.182.

The petition under 37 CFR 1.182 is **DISMISSED**.

The application was filed on April 3, 2006. However, on May 12, 2006, The Office of Initial Patent Examination mailed a "Notice of Omitted Items in a Provisional Application" (Notice) stating that the application had been accorded a filing date of April 3, 2006, and advising applicants that figure 3 appeared to have been omitted.

In response, the present petition was filed. Petitioners argue that the omitted drawing submitted with the petition should be included with the papers filed on April 3, 2006, because it was originally filed in prior application Nos. 11/362,240 and 60/656,557, the entire disclosures of both were incorporated by reference into the present application at the time of the present application's filing.

The mailing of a "Notice of Omitted Items in a Provisional Application" permits an applicant to either: (1) promptly establish prior receipt in the PTO of the items at issue (generally by way of a date-stamped postcard receipt (MPEP 503)), or (2) accept the application as filed. An applicant asserting that the missing items were in fact deposited in the PTO with the application papers must file a petition (and the appropriate petition fee) with evidence of such deposit.

In this case, petitioners have neither asserted that the missing figure was physically present when the instant application was filed, nor accepted the application as filed without the missing figure.

Instead, applicants seek to add the figure to the instant application on the basis that the figure was filed in prior application Nos. 11/362,240 and 60/656,557, the entire disclosures of both were incorporated by reference into the present application at the time of the present application's filing. However, it is not permissible to amend a provisional application. 37 CFR 1.53(c).

Accordingly, the petition is inappropriate and is subject to dismissal. The petition fee will not be refunded, since the petition was not necessitated by any error on the part of the Office.

The application is being returned to the Office of Initial Patent Examination for further processing with a filing date of April 3, 2006. Figure 3 submitted with the present petition will **not** be processed and will **not** be considered part of the originally filed application papers.

Telephone inquiries specific to this matter should be directed to the undersigned at (571) 272-3230.

Shirene Willis Brantley

Shirene Willis Brantley
Senior Petitions Attorney
Office of Petitions
Office of the Deputy Commissioner
for Patent Examination Policy

UNITED STATES PATENT AND TRADEMARK OFFICE

UNITED STATES DEPARTMENT OF COMMERCE
United States Patent and Trademark Office
Address: COMMISSIONER FOR PATENTS
P.O. Box 1450
Alexandria, Virginia 22313-1450
www.uspto.gov

APPL NO.	FILING OR 371 (c) DATE	ART UNIT	FIL FEE REC'D	ATTY.DOCKET NO	DRAWINGS	TOT CLMS	IND CLMS
60/789,620	04/03/2006		100	MAYED06/03P	9		

CONFIRMATION NO. 8301

CORRECTED FILING RECEIPT

OC000000020395440

27988
JOSEPH T. REGARD, LTD PLC
PO DRAWER 429
MADISONVILLE, LA 70447-0429

Date Mailed: 09/12/2006

Receipt is acknowledged of this provisional Patent Application. It will not be examined for patentability and will become abandoned not later than twelve months after its filing date. Be sure to provide the U.S. APPLICATION NUMBER, FILING DATE, NAME OF APPLICANT, and TITLE OF INVENTION when inquiring about this application. Fees transmitted by check or draft are subject to collection. Please verify the accuracy of the data presented on this receipt. **If an error is noted on this Filing Receipt, please mail to the Commissioner for Patents P.O. Box 1450 Alexandria Va 22313-1450. Please provide a copy of this Filing Receipt with the changes noted thereon. If you received a "Notice to File Missing Parts" for this application, please submit any corrections to this Filing Receipt with your reply to the Notice. When the USPTO processes the reply to the Notice, the USPTO will generate another Filing Receipt incorporating the requested corrections (if appropriate).**

Applicant(s)

Donald P. Mayeaux, Gonzales, LA;

Power of Attorney:

Joseph Regard III--34907

If Required, Foreign Filing License Granted: 04/28/2006

The country code and number of your priority application, to be used for filing abroad under the Paris Convention, is US60/789,620

Projected Publication Date: None, application is not eligible for pre-grant publication

Non-Publication Request: Not applicable

Early-Publication Request: Not applicable

**** SMALL ENTITY ****

Title

Modular sample conditioning system

PROTECTING YOUR INVENTION OUTSIDE THE UNITED STATES

Since the rights granted by a U.S. patent extend only throughout the territory of the United States and have no effect in a foreign country, an inventor who wishes patent protection in another country must apply for a patent in a specific country or in regional patent offices. Applicants may wish to consider the filing of an international application under the Patent Cooperation Treaty (PCT). An international (PCT) application generally has the same effect as a regular national patent application in each PCT-member country. The PCT process **simplifies** the filing of patent applications on the same invention in member countries, but **does not result** in a grant of "an international patent" and does not eliminate the need of applicants to file additional documents and fees in countries where patent protection is desired.

Almost every country has its own patent law, and a person desiring a patent in a particular country must make an application for patent in that country in accordance with its particular laws. Since the laws of many countries differ in various respects from the patent law of the United States, applicants are advised to seek guidance from specific foreign countries to ensure that patent rights are not lost prematurely.

Applicants also are advised that in the case of inventions made in the United States, the Director of the USPTO must issue a license before applicants can apply for a patent in a foreign country. The filing of a U.S. patent application serves as a request for a foreign filing license. The application's filing receipt contains further information and guidance as to the status of applicant's license for foreign filing.

Applicants may wish to consult the USPTO booklet, "General Information Concerning Patents" (specifically, the section entitled "Treaties and Foreign Patents") for more information on timeframes and deadlines for filing foreign patent applications. The guide is available either by contacting the USPTO Contact Center at 800-786-9199, or it can be viewed on the USPTO website at http://www.uspto.gov/web/offices/pac/doc/general/index.html.

For information on preventing theft of your intellectual property (patents, trademarks and copyrights), you may wish to consult the U.S. Government website, http://www.stopfakes.gov. Part of a Department of Commerce initiative, this website includes self-help "toolkits" giving innovators guidance on how to protect intellectual property in specific countries such as China, Korea and Mexico. For questions regarding patent enforcement issues, applicants may call the U.S. Government hotline at 1-866-999-HALT (1-866-999-4158).

LICENSE FOR FOREIGN FILING UNDER
Title 35, United States Code, Section 184
Title 37, Code of Federal Regulations, 5.11 & 5.15

GRANTED

The applicant has been granted a license under 35 U.S.C. 184, if the phrase "IF REQUIRED, FOREIGN FILING LICENSE GRANTED" followed by a date appears on this form. Such licenses are issued in all applications where the conditions for issuance of a license have been met, regardless of whether or not a license may be required as set forth in 37 CFR 5.15. The scope and limitations of this license are set forth in 37 CFR 5.15(a) unless an earlier license has been issued under 37 CFR 5.15(b). The license is subject to revocation upon written notification. The date indicated is the effective date of the license, unless an earlier license of similar scope has been granted under 37 CFR 5.13 or 5.14.

This license is to be retained by the licensee and may be used at any time on or after the effective date thereof unless it is revoked. This license is automatically transferred to any related applications(s) filed under 37 CFR 1.53(d). This license is not retroactive.

The grant of a license does not in any way lessen the responsibility of a licensee for the security of the subject matter as imposed by any Government contract or the provisions of existing laws relating to espionage and the national security or the export of technical data. Licensees should apprise themselves of current regulations especially with respect to certain countries, of other agencies, particularly the Office of Defense Trade Controls, Department of State (with respect to Arms, Munitions and Implements of War (22 CFR 121-128)); the Bureau of Industry and Security, Department of Commerce (15 CFR parts 730-774); the Office of Foreign Assets Control, Department of Treasury (31 CFR Parts 500+) and the Department of Energy.

NOT GRANTED

No license under 35 U.S.C. 184 has been granted at this time, if the phrase "IF REQUIRED, FOREIGN FILING LICENSE GRANTED" DOES NOT appear on this form. Applicant may still petition for a license under 37 CFR 5.12, if a license is desired before the expiration of 6 months from the filing date of the application. If 6 months has lapsed from the filing date of this application and the licensee has not received any indication of a secrecy order under 35 U.S.C. 181, the licensee may foreign file the application pursuant to 37 CFR 5.15(b).

UNITED STATES PATENT AND TRADEMARK OFFICE

Commissioner for Patents
United States Patent and Trademark Office
P.O. Box 1450
Alexandria, VA 22313-1450
www.uspto.gov

JJGJr: 08-06

Paper No: __

COPY MAILED
SEP 1 1 2006
OFFICE OF PETITIONS

JACOBSON HOLMAN PLLC
400 SEVENTH STREET, N.W.
WASHINGTON DC 20004

In re Application of
Durkin, et al. :
Application No. 60/789,897 : ON PETITION
Filed: 7 April, 2006 :
Attorney Docket No.: P71219US0 :

This is a decision on the petition filed (with fee) on 20 June, 2006, to expunge a document from the file and considered under 37 C.F.R. §1.59,[1] and for waiver under 37 C.F.R. §1.183[2] of the Rules of Practice.

---

[1] The regulations at 37 C.F.R. §1.58 provide:

§1.59 Expungement of information or copy of papers in application file.

(a)(1)Information in an application will not be expunged and returned, except as provided in paragraph (b)of this section. See §1.618 for return of unauthorized and improper papers in interferences.

(2)Information forming part of the original disclosure (*i.e.*,written specification including the claims, drawings, and any preliminary amendment specifically incorporated into an executed oath or declaration under §§1.63 and 1.175)will not be expunged from the application file.

(b)An applicant may request that the Office expunge and return information, other than what is excluded by paragraph (a)(2)of this section, by filing a petition under this paragraph. Any petition to expunge and return information from an application must include the fee set forth in § 1.17((h)and establish to the satisfaction of the Commissioner that the return of the information is appropriate.

(c)Upon request by an applicant and payment of the fee specified in §1.19(b),the Office will furnish copies of an application, unless the application has been disposed of (see §1.53(e),(f)and (g)). The Office cannot provide or certify copies of an application that has been disposed of.

[48 FR 2710, Jan.20, 1983, effective Feb. 27, 1983; 49 FR 554, Jan.4, 1984, effective Apr.1, 1984; 49 FR 48416, Dec. 12, 1984, effective Feb. 11, 1985; 50 FR 23123, May 31, 1985, effective Feb.11, 1985; revised, 60 FR 20195, Apr. 25, 1995, effective June 8, 1995; revised, 62 FR 53131, Oct.10, 1997, effective Dec. 1, 1997; para. (b) revised, 65 FR 54604, Sept. 8, 2000, effective Nov.7, 2000]

[2] The regulations at 37 C.F.R. §1.183 provide, in pertinent part:

§1.183 Suspension of the Rules.

In an extraordinary situation, when justice requires, any requirement of the regulations in this part which is not a requirement of the statutes may be suspended or waived by the Commissioner or the Commissioner's designee, *sua sponte*, or on petition of the interested party, subject to such other requirements as may be imposed. * * *

The petitions under 37 C.F.R. §1.59 and §1.183[3] are **DISMISSED**.

NOTES:

(1) Any petition (and fee) for reconsideration of this decision under 37 C.F.R. §1.183 and §1.59 must be submitted within two (2) months from the mail date of this decision. Extensions of time under 37 C.F.R. §1.136(a) are permitted. The reconsideration request should include a cover letter entitled "Renewed Petition under 37 C.F.R. §1.183 §1.59";

(2) Thereafter, there will be no further reconsideration of this matter.

BACKGROUND

The instant application was deposited on 7 April, 2006.

On 28 April, 2006, OIPE mailed a Notice of Omitted Items indicating that Figs. 12-23, as described in the specification, appeared to have been omitted on deposit.

Thereafter Petitioner appears to have discovered that an incorrect set of drawing figures were submitted with the application.

Petitioner seeks to expunge an incorrect set of drawings from the file.

LAW AND ANALYSIS

The Office reminds Petitioner that removal of the drawings strips from the application a requirement of filing–to wit: the deposit of the application with drawings as required under 35 U.S.C. §113 (first sentence).

Moreover, the Office reminds Petitioner that Because amendment of provisional applications is not permitted. (See: MPEP §601.01(b).) Petitioner may file a new provisional application.

The regulations at 37 C.F.R. §1.183 provide that "[i]n an extraordinary situation, when justice

---

[3] The regulations at 37 C.F.R. §1.183 provide, in pertinent part:
§1.183 Suspension of the Rules.
In an extraordinary situation, when justice requires, any requirement of the regulations in this part which is not a requirement of the statutes may be suspended or waived by the Commissioner or the Commissioner's designee, *sua sponte*, or on petition of the interested party, subject to such other requirements as may be imposed. * * *

requires," the Office may waive regulatory--but not statutory--requirements.

Petitioner has shown no "extraordinary situation" for which relief is required.

Therefore, the Office is without authority to grant the relief requested.

The Office should not relax the requirements of established practice, even if authorized and empowered to do so, in order to save applicants from the consequence(s) of their own choices.[4]

Petitioners's inadvertence that caused or contributed to Petitioners's choices is not ground for requesting waiver of the regulations.[5] Therefore, there is no adequate showing of an "extraordinary situation" in which "justice requires" suspension of the regulations.

Circumstances resulting from Petitioners's failure to exercise due care, or lack of knowledge of, or failure to properly apply, the patent statutes or rules of practice are not in any event extraordinary circumstances where the interests of justice require the granting of relief Further correspondence with respect to this matter should be addressed as follows:[6]

By mail: Commissioner for Patents[7]
P.O. Box 1450
Alexandria, VA 22313-1450

By FAX: IFW Formal Filings
(571) 273-8300
ATTN.: Office of Petitions

By hand: Mail Stop: Petition
Customer Service Window
Randolph Building
401 Dulany Street
Alexandria, VA 22314

---

[4] See: Ex Parte Sassin, 1906 Dec. Comm'r Pat. 205, 206 (Comm'r Pat. 1994); Cf: Ziegler v. Baxter v. Natta, 159 USPQ 378, 379 (Comm'r Pat. 1968), and Williams v. The Five Platters, Inc., 510 F.2d 963, 184 USPQ 744 (CCPA 1975).

[5] See: In re Kabushidi Kaisha Hitachi Seisakusho, 39 USPQ2d 1319, 1320 (Comm'r Pat. 1994).

[6] On July 15, 2005, the Central Facsimile (FAX) Number will change from (703) 872-9306 to (571) 273-8300. Faxes sent to the old number will be routed to the new number until September 15, 2005. After September 15, 2005, the old number will no longer be in service and (571) 273-8300 will be the only facsimile number recognized for centralized delivery. (For further information. see: http://www.uspto.gov/web/offices/pac/dapp/opla/preognotice/cfax062005.pdf .)

[7] To determine the appropriate addresses for other subject-specific correspondence, refer to the USPTO Web site at www.uspto.gov.

While telephone inquiries regarding this decision may be directed to the undersigned at (571) 272-3214, it is noted that all practice before the Office is in writing (see: 37 C.F.R. §1.2[8]) and the proper authority for action on any matter in this regard are the statutes (35 U.S.C.), regulations (37 C.F.R.) and the commentary on policy (MPEP). Therefore, no telephone discussion may be controlling or considered authority for Petitioner's action(s).

John J. Gillon, Jr.
Senior Attorney
Office of Petitions

[8] The regulations at 37 C.F.R. §1.2 provide:
§1.2 Business to be transacted in writing.
All business with the Patent and Trademark Office should be transacted in writing.The personal attendance of applicants or their attorneys or agents at the Patent and Trademark Office is unnecessary. The action of the Patent and Trademark Office will be based exclusively on the written record in the Office. No attention will be paid to any alleged oral promise, stipulation,or understanding in relation to which there is disagreement or doubt.

UNITED STATES PATENT AND TRADEMARK OFFICE

Commissioner for Patents
United States Patent and Trademark Office
P.O. Box 1450
Alexandria, VA 22313-1450
www.uspto.gov

OSTROLENK, FABER, GERB & SOFFEN, LLP
1180 AVENUE OF THE AMERICAS
NEW YORK, NY 10036

COPY MAILED

JUL 03 2007

OFFICE OF PETITIONS

In re Application of	:	
Christian Locatelli et al	:	
Application No. 60/790,406	:	DECISION ON PETITION
Filed: April 7, 2006	:	
Attorney Docket No. IR-3132 PROV (2-5062)	:	

This is in response to the "Request for Corrected Filing Receipt, filed November 20, 2006, which is being treated as a petition under 37 CFR 1.10(d) requesting that the above-identified application be accorded a filing date of April 7, 2006, rather than the presently accorded date of April 8, 2006.

The petition is **GRANTED**.

Under 37 CFR 1.10(d), any person filing correspondence under this section that was received by the Office and delivered by the "Express Mail Post Office to Addressee" service of the USPS, who can show that the "date-in" on the "Express Mail" mailing label or other official notation entered by the USPS was incorrectly entered or omitted by the USPS, may petition the Director to accord the correspondence a filing date as of the date the correspondence is shown to have been deposited with the USPS.

The showing under 37 CFR 1.10(d) must be corroborated by (1) evidence from the USPS, or (2) evidence that came into being after deposit and within one business day of the deposit of the correspondence as "Express Mail." Evidence from the USPS may be the "Express Mail" Corporate Account Mailing Statement. Due to the questionable reliability of evidence from a party other than the USPS that did not come into being contemporaneously with the deposit of the correspondence with the USPS, 37 CFR 1.10(d) specifically requires that any petition under 37 CFR 1.10(d) be corroborated either by evidence from the USPS, or by evidence that came into being after deposit and within one business day after the deposit of the correspondence as "Express Mail. Evidence that came into being within one day after the deposit of the correspondence as "Express Mail" may be in the form of a log book which contains information such as the "Express Mail" number; the application number, attorney docket number or other such file identification number; the place, date and time of deposit; the time of the last scheduled pick up for that date and place of deposit; the depositor's initials or signature; and the date and time of entry in the log. Conversely, evidence created prior to the deposit of the correspondence as "Express Mail" with the USPS (e.g., an application transmittal cover letter, or a client letter prepared prior to the deposit of the correspondence); or created more than one business day after the deposit of the correspondence as "Express Mail" (e.g., an affidavit or declaration prepared more than one business day after the correspondence was deposited with the USPS as "Express Mail") cannot be accepted under the terms of the rule.

Petitioner requests the earlier filing date on the basis that the application was purportedly deposited in Express Mail service on April 7, 2006, pursuant to the requirements of 37 CFR 1.10. The petition is accompanied by: (1) a copy of petitioner's "Pickup Service Statement for Express Mail, Priority Mail, or Parcel Post," which shows that a package bearing Express Mail label No. EV 605033863 US was signed for by a USPS employee on April 7, 2006 (the aforementioned Express Mail number appears on the original Express Mail Certificate for the application papers of record in this file), (2) a copy of Express Mail label No. EV 605033863 US, which does not have a written "date-in" or other postal notation, and (3) a copy of the Track & Confirm Search Results record for Express Mail Label No. EV 605033863 US, which discloses that the Express Mail package at issue was enroute on April 7, 2006 at 5:01 p.m. and later accepted on April 7, 2006 at 7:12 p.m.

A grantable petition under 37 CFR 1.10(d) must include:

> (1) The filing of a petition promptly after the person becomes aware that the Office has accorded, or will accord, a filing date based upon an incorrect entry by the USPS;
>
> (2) The placement of the "Express Mail" number on the mailing label of the paper(s) or fee(s) that constitutes the correspondence prior to the original mailing by "Express Mail"; and
>
> (3) A showing which establishes, to the satisfaction of the Director, that the requested filing date was the date the correspondence was deposited in the "Express Mail Post Office to Addressee" service prior to the last scheduled pickup for that day. Any showing pursuant to this paragraph must be corroborated by evidence from the USPS or that came into being after deposit and within one business day of the deposit of the correspondence in the "Express Mail Post Office to Addressee" service of the USPS.

The petition complies with the above requirements. Accordingly, this application is entitled to a filing date of April 7, 2006 and has been so accorded.

A Corrected Filing Receipt accompanies this decision on petition.

Telephone inquiries concerning this matter may be directed to the undersigned at (571) 272-3218.

Frances Hicks
Petitions Examiner
Office of Petitions

ATTACHMENT: Corrected Filing Receipt

UNITED STATES PATENT AND TRADEMARK OFFICE

UNITED STATES DEPARTMENT OF COMMERCE
United States Patent and Trademark Office
Address: COMMISSIONER FOR PATENTS
P.O. Box 1450
Alexandria, Virginia 22313-1450
www.uspto.gov

APPL NO.	FILING OR 371(c) DATE	ART UNIT	FIL FEE REC'D	ATTY.DOCKET NO	TOT CLMS	IND CLMS
60/790,406	04/07/2006		200	IR-3132 PROV (2-5062)		

CONFIRMATION NO. 2818

CORRECTED FILING RECEIPT

OC000000024638003

2352
OSTROLENK FABER GERB & SOFFEN
1180 AVENUE OF THE AMERICAS
NEW YORK, NY 100368403

Date Mailed: 07/02/2007

Receipt is acknowledged of this provisional Patent Application. It will not be examined for patentability and will become abandoned not later than twelve months after its filing date. Be sure to provide the U.S. APPLICATION NUMBER, FILING DATE, NAME OF APPLICANT, and TITLE OF INVENTION when inquiring about this application. Fees transmitted by check or draft are subject to collection. Please verify the accuracy of the data presented on this receipt. **If an error is noted on this Filing Receipt, please mail to the Commissioner for Patents P.O. Box 1450 Alexandria Va 22313-1450. Please provide a copy of this Filing Receipt with the changes noted thereon. If you received a "Notice to File Missing Parts" for this application, please submit any corrections to this Filing Receipt with your reply to the Notice. When the USPTO processes the reply to the Notice, the USPTO will generate another Filing Receipt incorporating the requested corrections (if appropriate).**

Applicant(s)

Christian Locatelli, Torino, ITALY;
Andrea Merello, Arese (Milan), ITALY;

Power of Attorney:

Louis Dujmich--30625

If Required, Foreign Filing License Granted: 04/27/2006

The country code and number of your priority application, to be used for filing abroad under the Paris Convention, is US60/790,406

Projected Publication Date: None, application is not eligible for pre-grant publication

Non-Publication Request: Not applicable

Early-Publication Request: Not applicable

Title

Circuit to optimize charging of bootstrap capacitor with bootstrap diode emulator

PROTECTING YOUR INVENTION OUTSIDE THE UNITED STATES

Since the rights granted by a U.S. patent extend only throughout the territory of the United States and have no effect in a foreign country, an inventor who wishes patent protection in another country must apply for a patent in a specific country or in regional patent offices. Applicants may wish to consider the filing of an international application under the Patent Cooperation Treaty (PCT). An international (PCT) application generally has the same effect as a regular national patent application in each PCT-member country. The PCT process **simplifies** the filing of patent applications on the same invention in member countries, but **does not result** in a grant of "an international patent" and does not eliminate the need of applicants to file additional documents and fees in countries where patent protection is desired.

Almost every country has its own patent law, and a person desiring a patent in a particular country must make an application for patent in that country in accordance with its particular laws. Since the laws of many countries differ in various respects from the patent law of the United States, applicants are advised to seek guidance from specific foreign countries to ensure that patent rights are not lost prematurely.

Applicants also are advised that in the case of inventions made in the United States, the Director of the USPTO must issue a license before applicants can apply for a patent in a foreign country. The filing of a U.S. patent application serves as a request for a foreign filing license. The application's filing receipt contains further information and guidance as to the status of applicant's license for foreign filing.

Applicants may wish to consult the USPTO booklet, "General Information Concerning Patents" (specifically, the section entitled "Treaties and Foreign Patents") for more information on timeframes and deadlines for filing foreign patent applications. The guide is available either by contacting the USPTO Contact Center at 800-786-9199, or it can be viewed on the USPTO website at http://www.uspto.gov/web/offices/pac/doc/general/index.html.

For information on preventing theft of your intellectual property (patents, trademarks and copyrights), you may wish to consult the U.S. Government website, http://www.stopfakes.gov. Part of a Department of Commerce initiative, this website includes self-help "toolkits" giving innovators guidance on how to protect intellectual property in specific countries such as China, Korea and Mexico. For questions regarding patent enforcement issues, applicants may call the U.S. Government hotline at 1-866-999-HALT (1-866-999-4158).

LICENSE FOR FOREIGN FILING UNDER
Title 35, United States Code, Section 184
Title 37, Code of Federal Regulations, 5.11 & 5.15

GRANTED

The applicant has been granted a license under 35 U.S.C. 184, if the phrase "IF REQUIRED, FOREIGN FILING LICENSE GRANTED" followed by a date appears on this form. Such licenses are issued in all applications where the conditions for issuance of a license have been met, regardless of whether or not a license may be required as set forth in 37 CFR 5.15. The scope and limitations of this license are set forth in 37 CFR 5.15(a) unless an earlier license has been issued under 37 CFR 5.15(b). The license is subject to revocation upon written notification. The date indicated is the effective date of the license, unless an earlier license of similar scope has been granted under 37 CFR 5.13 or 5.14.

This license is to be retained by the licensee and may be used at any time on or after the effective date thereof unless it is revoked. This license is automatically transferred to any related applications(s) filed under 37 CFR 1.53(d). This license is not retroactive.

The grant of a license does not in any way lessen the responsibility of a licensee for the security of the subject matter as imposed by any Government contract or the provisions of existing laws relating to espionage and the national security or the export of technical data. Licensees should apprise themselves of current regulations especially with respect to certain countries, of other agencies, particularly the Office of Defense Trade Controls, Department of State (with respect to Arms, Munitions and Implements of War (22 CFR 121-128)); the Bureau of

Industry and Security, Department of Commerce (15 CFR parts 730-774); the Office of Foreign Assets Control, Department of Treasury (31 CFR Parts 500+) and the Department of Energy.

NOT GRANTED

No license under 35 U.S.C. 184 has been granted at this time, if the phrase "IF REQUIRED, FOREIGN FILING LICENSE GRANTED" DOES NOT appear on this form. Applicant may still petition for a license under 37 CFR 5.12, if a license is desired before the expiration of 6 months from the filing date of the application. If 6 months has lapsed from the filing date of this application and the licensee has not received any indication of a secrecy order under 35 U.S.C. 181, the licensee may foreign file the application pursuant to 37 CFR 5.15(b).

UNITED STATES PATENT AND TRADEMARK OFFICE

Commissioner for Patents
United States Patent and Trademark Office
P.O. Box 1450
Alexandria, VA 22313-1450
www.uspto.gov

William S. Perell
Suite 220
301 Junipero Boulevard
San Francisco CA 94127

COPY MAILED

JUL 09 2007

OFFICE OF PETITIONS

In re Application of :
Perell :
Application No. 60/790,481 :
Filed: April 10, 2006 :
Attorney Docket No. Per 49 Sha.Bub :
For: SHAPED BREACHING BUBBLE WITH INWARD INCURSION STRESS POINT

ON PETITION

This is a decision on the petition under 37 CFR 1.137(b), filed February 9, 2007 (certificate of mailing date February 7, 2007), to revive the above-identified application.

The petition under 37 CFR 1.137(b) is **GRANTED**.

This application became abandoned for failure to timely reply to the Notice to File Missing Parts of Provisional Application mailed May 2, 2006, which set a two month shortened statutory period for reply. No extensions of time having been obtained pursuant to 37 CFR 1.136(a) and no reply being received in the Office, this application became abandoned on July 3, 2006. A Notice of Abandonment was mailed on January 11, 2007.

Applicant has submitted a proper reply to the May 2, 2006 Notice in the form of $25.00 to complete the basic filing fee and the $25.00 surcharge, an acceptable statement of the unintentional nature of the delay in responding to the May 2, 2006 Notice, and the $750.00 petition fee. Accordingly, the petition under 37 CFR 1.137(b) is granted.

After the mailing of this decision, the file will be returned to the Office of Initial Patent Examination for further processing.

Telephone inquiries concerning this matter may be directed to the undersigned at (571) 272-3230.

Shirene Willis Brantley
Senior Petitions Attorney
Office of Petitions

UNITED STATES PATENT AND TRADEMARK OFFICE

Commissioner for Patents
United States Patent and Trademark Office
P.O. Box 1450
Alexandria, VA 22313-1450
www.uspto.gov

William S. Perell
Suite 220
301 Junipero Boulevard
San Francisco CA 94127

COPY MAILED

JUL 09 2007

OFFICE OF PETITIONS

ON PETITION

In re Application of :
Perell :
Application No. 60/790,482 :
Filed: April 10, 2006 :
Attorney Docket No. Per 46 Med.Bub :
For: BUBLE CONTAINER FOR DISPENSING MEDICATIONS

This is a decision on the petition under 37 CFR 1.137(b), filed January 25, 2007 (certificate of mailing date January 22, 2007), to revive the above-identified application.

The petition under 37 CFR 1.137(b) is **GRANTED**.

This application became abandoned for failure to timely reply to the Notice to File Missing Parts of Provisional Application mailed May 2, 2006, which set a two month shortened statutory period for reply. No extensions of time having been obtained pursuant to 37 CFR 1.136(a) and no reply being received in the Office, this application became abandoned on July 3, 2006. A Notice of Abandonment was mailed on January 11, 2007.

Applicant has submitted a proper reply to the May 2, 2006 Notice in the form of $25.00 to complete the basic filing fee and the $25.00 surcharge, an acceptable statement of the unintentional nature of the delay in responding to the May 2, 2006 Notice, and the $750.00 petition fee. Accordingly, the petition under 37 CFR 1.137(b) is granted.

After the mailing of this decision, the file will be returned to the Office of Initial Patent Examination for further processing.

Telephone inquiries concerning this matter may be directed to the undersigned at (571) 272-3230.

Shirene Willis Brantley
Senior Petitions Attorney
Office of Petitions

UNITED STATES PATENT AND TRADEMARK OFFICE

Commissioner for Patents
United States Patent and Trademark Office
P.O. Box 1450
Alexandria, VA 22313-1450
www.uspto.gov

William S. Perell
Suite 220
301 Junipero Boulevard
San Francisco CA 94127

COPY MAILED

JUL 09 2007

OFFICE OF PETITIONS

ON PETITION

In re Application of :
Perell :
Application No. 60/790,483 :
Filed: April 10, 2006 :
Attorney Docket No. Per 49 Bli.Pak :
For: EDGE BREACHING BUBBLES FOR BLISTER PACK

This is a decision on the petition under 37 CFR 1.137(b), filed January 30, 2007 (certificate of mailing date January 25, 2007), to revive the above-identified application.

The petition under 37 CFR 1.137(b) is **GRANTED**.

This application became abandoned for failure to timely reply to the Notice to File Missing Parts of Provisional Application mailed May 2, 2006, which set a two month shortened statutory period for reply. No extensions of time having been obtained pursuant to 37 CFR 1.136(a) and no reply being received in the Office, this application became abandoned on July 3, 2006. A Notice of Abandonment was mailed on January 11, 2007.

Applicant has submitted a proper reply to the May 2, 2006 Notice in the form of $25.00 to complete the basic filing fee and the $25.00 surcharge, an acceptable statement of the unintentional nature of the delay in responding to the May 2, 2006 Notice, and the $750.00 petition fee. Accordingly, the petition under 37 CFR 1.137(b) is granted.

After the mailing of this decision, the file will be returned to the Office of Initial Patent Examination for further processing.

Telephone inquiries concerning this matter may be directed to the undersigned at (571) 272-3230.

Shirene Willis Brantley
Senior Petitions Attorney
Office of Petitions

UNITED STATES PATENT AND TRADEMARK OFFICE

COMMISSIONER FOR PATENTS
UNITED STATES PATENT AND TRADEMARK OFFICE
P.O. BOX 1450
ALEXANDRIA, VA 22313-1450
www.uspto.gov

WILLIAM S. PERELL
301 JUNIPERO BOULEVARD
SUITE 220
SAN FRANCISCO CA 94127

COPY MAILED

SEP 26 2007

OFFICE OF PETITIONS

In re Application of	:	
PERELL	:	
Application No.: 60/790,722	:	DECISION ON PETITION
Filing Date: April 11, 2006	:	UNDER 37 CFR 1.137(b)
Attorney Docket No.: Per 47 Clm.Pak	:	

This is a decision on the petition under 37 CFR 1.137(b), filed January 16, 2007, to revive the above-identified application.

The petition is **GRANTED.**

The above-identified application became abandoned for failure to reply in a timely manner to the Notice to File Missing Parts of Provisional Application mailed April 27, 2006, which set a two (2) month period for reply. No extensions of time under the provisions of 37 CFR 1.136(a) were obtained. Accordingly, by operation of law, the above-identified application became abandoned on June 27, 2006.

The petition satisfies the conditions for revival pursuant to the provisions of 37 CFR 1.137(b) in that (1) the reply in the form of the basic filing fee and the surcharge; (2) the petition fee; and (3) the required statement of unintentional delay have been received. Accordingly, the reply to the Notice to File Missing Parts of Provisional Application is accepted as having been unintentionally delayed.

This application is being referred to the Office of Initial Patent Examination.

Telephone inquiries concerning this decision should be directed to the undersigned at (571) 272-3301.

Daniel Stemmer
Legal Examiner
Office of the Deputy Commissioner
for Patent Examination Policy

UNITED STATES PATENT AND TRADEMARK OFFICE

COMMISSIONER FOR PATENTS
UNITED STATES PATENT AND TRADEMARK OFFICE
P.O. BOX 1450
ALEXANDRIA, VA 22313-1450
www.uspto.gov

COPY MAILED

SEP 12 2007

OFFICE OF PETITIONS

WILLIAM S. PERELL
301 JUNIPERO BOULEVARD
SUITE 220
SAN FRANCISCO, CA 94127

In re Application of William S. Perell Application No. 60/790,724 Filed: April 11, 2006 Attorney Docket No. Per 48 Edq. Pel	: : : : :	ON PETITION

This is a decision on the petition under 37 CFR 1.137(b), filed by January 25, 2007, to revive the above-identified application.

The petition is **GRANTED**.

The application became abandoned for failure to timely respond to a Notice to File Missing Parts mailed April 24, 2006. The notice set a two-month period to respond and required (1) $25.00 to complete the basic filing fee and (2) the surcharge as set forth in 37 CFR 1.16(g) of $25. A Notice of Abandonment was mailed on January 4, 2007. On January 25, 2007, the present petition was filed.

The petition satisfies the requirements of 37 CFR 1.137(b) in that petitioner has supplied (1) the reply in the form of the balance of the basic filing fee and the $25 surcharge; (2) the petition fee of $750; and (3) an adequate statement of unintentional delay. Accordingly, the failure to timely reply to the Notice of April 24, 2006 is accepted as being unintentionally delayed.

Subject to the provisions of 35 U.S.C. § 119(e)(3) and § 1.7(b), a provisional application will not be regarded as pending after twelve months from its filing date under any circumstances.

Telephone inquires related to this decision should be directed to the undersigned at (571) 272-3204.

Sherry D. Brinkley

Sherry D. Brinkley
Petitions Examiner
Office of Petitions

UNITED STATES PATENT AND TRADEMARK OFFICE

Commissioner for Patents
United States Patent and Trademark Office
P.O. Box 1450
Alexandria, VA 22313-1450
www.uspto.gov

WILLIAM S. PERELL
301 JUNIPERO BOULEVARD
SUITE 220
SAN FRANCISCO CA 94127

COPY MAILED

DEC 12 2007

OFFICE OF PETITIONS

In re Application of :
William S. Perell :
Application No. 60/790,863 : DECISION ON PETITION
Filed: April 11, 2006 :
For: USER INFLATED BREACHING :
BUBBLE

This is a decision on the petition under 37 CFR 1.137(b), filed March 12, 2007, to revive the above-identified application.

The petition is **DISMISSED as moot** for the reasons stated below.

The application became abandoned for failure to reply in a timely manner to the Notice to File Missing Parts of Nonprovisional Application (Notice), mailed April 27, 2006, which required a balance due of $25 for the basic filing fee and a $25 surcharge fee for the late submission of the filing fee. The Notice set a period for reply of two (2) months from the mail date of the Notice. No extensions of time were obtained under the provisions of 37 CFR 1.136(a). Accordingly, the application became abandoned on June 28, 2006. A Notice of Abandonment was mailed on January 4, 2007.

Applicant is advised that, in order for a nonprovisional application to claim benefit of a provisional application, the filing fee in the provisional application must have been paid within the period specified in 37 CFR 1.53(g). Although a nonprovisional application claiming the benefit of a provisional application is not required to be copending with the provisional application, abandonment of a provisional application for failure to pay the basic filing fee would indicate that the nonprovisional application could not claim the benefit of the provisional application because the basic filing fee was not paid within the time period set forth in 37 CFR 1.53(g) as required by 37 CFR 1.78(a)(4). Therefore, the filing of a petition to revive under 37 CFR 1.137 is not appropriate where a provisional application becomes abandoned for failure to pay the filing fee or any part of the filing fee within the period set therefor.

Rather, it would be appropriate for applicant to file a petition under 37 CFR 1.183 showing that circumstances of applicant's failure to pay the provisional application filing fee within the period specified in 37 CFR 1.53(g) constituted an "extraordinary situation" in which "justice requires" a waiver of this requirement of 37 CFR 1.78(a)(4). *Note* MPEP 201.11(C)(II)(A); 65 *Fed. Reg.* 50099 (August 15, 2000); and 37 CFR 1.78(a)(4).

Petitioner is advised that, should he file a petition under 37 CFR 1.183, there can be no assurance that such petition will ultimately be granted.

As a petition under 37 CFR 1.137(b) is not the proper avenue of relief for the reasons stated above, the $750 petition fee submitted is unnecessary. Petitioner may request a refund of the $750 petition fee submitted by writing to Mail Stop 16, Director of the U.S. Patent and Trademark Office, P. O. Box 1450, Alexandria, Virginia 22313-1450.

Further correspondence with respect to this matter should be addressed as follows:

By Mail: Mail Stop PETITION
Commissioner for Patents
P. O. Box 1450
Alexandria, VA 22313-1450

By hand: U. S. Patent and Trademark Office
Customer Service Window, Mail Stop Petitions
Randolph Building
401 Dulany Street
Alexandria, VA 22314

The centralized facsimile number is **(571) 273-8300.**

Correspondence regarding this decision may also be filed through the electronic filing system of the USPTO.

Telephone inquiries concerning this decision should be directed to the undersigned at (571) 272-3218 or to the Office of Petitions Help Desk at (571) 272-3282 after January 3, 2008.

Frances Hicks
Petitions Examiner
Office of Petitions

UNITED STATES PATENT AND TRADEMARK OFFICE

Commissioner for Patents
United States Patent and Trademark Office
P.O. Box 1450
Alexandria, VA 22313-1450
www.uspto.gov

KENYON & KENYON LLP
ONE BROADWAY
NEW YORK, NY 10004

COPY MAILED

DEC 2 1 2007

OFFICE OF PETITIONS

In re Application of :
Kansal, et al. :
Application No. 60/791,114 : ON PETITION
Filed: April 10,2006 :
Attorney Docket No. **1662/75301**

This is a decision on the petition under 37 CFR 1.182, filed November 19, 2007, to change the name of the third named inventor cited on this application in USPTO records.

The petition is **granted.**

The name of the third named inventor for the above-cited application is changed to "Shanmugavel Mariappan."

A corrected filing receipt is enclosed.

The fee for the instant petition is $400.00. Deposit account 11-0600 will be charged $400.00, accordingly.

Telephone inquiries concerning this matter may be directed to the undersigned at (571) 272-3222.

Kenya A. McLaughlin
Petitions Attorney
Office of Petitions

Enclosure: Corrected Filing Receipt

UNITED STATES PATENT AND TRADEMARK OFFICE

UNITED STATES DEPARTMENT OF COMMERCE
United States Patent and Trademark Office
Address: COMMISSIONER FOR PATENTS
P.O. Box 1450
Alexandria, Virginia 22313-1450
www.uspto.gov

APPLICATION NUMBER	FILING or 371(c) DATE	GRP ART UNIT	FIL FEE REC'D	ATTY.DOCKET.NO	TOT CLAIMS	IND CLAIMS
60/791,114	04/10/2006		200	1662/75301		

CONFIRMATION NO. 5578

CORRECTED FILING RECEIPT

26646
KENYON & KENYON LLP
ONE BROADWAY
NEW YORK, NY 10004

OC000000027406148

Date Mailed: 12/20/2007

Receipt is acknowledged of this provisional patent application. It will not be examined for patentability and will become abandoned not later than twelve months after its filing date. Any correspondence concerning the application must include the following identification information: the U.S. APPLICATION NUMBER, FILING DATE, NAME OF APPLICANT, and TITLE OF INVENTION. Fees transmitted by check or draft are subject to collection. Please verify the accuracy of the data presented on this receipt. **If an error is noted on this Filing Receipt, please write to the Office of Initial Patent Examination's Filing Receipt Corrections. Please provide a copy of this Filing Receipt with the changes noted thereon. If you received a "Notice to File Missing Parts" for this application, please submit any corrections to this Filing Receipt with your reply to the Notice. When the USPTO processes the reply to the Notice, the USPTO will generate another Filing Receipt incorporating the requested corrections**

Applicant(s)

Vinod Kumar Kansal, Haryana, INDIA;
Suhail Ahmad, New Delhi, INDIA;
Shanmugavel Mariappan, Tamilnadu, INDIA;
Bhupendra Tyagi, Dehradun Uttaranchal, INDIA;

Power of Attorney:
Wen-Hsin Lin--53221

If Required, Foreign Filing License Granted: 04/26/2006
The country code and number of your priority application, to be used for filing abroad under the Paris Convention, is **US 60/791,114**
Projected Publication Date: None, application is not eligible for pre-grant publication
Non-Publication Request: No
Early Publication Request: No
Title

Process for the synthesis of azetidinone

PROTECTING YOUR INVENTION OUTSIDE THE UNITED STATES

Since the rights granted by a U.S. patent extend only throughout the territory of the United States and have no effect in a foreign country, an inventor who wishes patent protection in another country must apply for a patent in a specific country or in regional patent offices. Applicants may wish to consider the filing of an international application under the Patent Cooperation Treaty (PCT). An international (PCT) application generally has the same effect as a regular national patent application in each PCT-member country. The PCT process **simplifies** the filing

of patent applications on the same invention in member countries, but **does not result** in a grant of "an international patent" and does not eliminate the need of applicants to file additional documents and fees in countries where patent protection is desired.

Almost every country has its own patent law, and a person desiring a patent in a particular country must make an application for patent in that country in accordance with its particular laws. Since the laws of many countries differ in various respects from the patent law of the United States, applicants are advised to seek guidance from specific foreign countries to ensure that patent rights are not lost prematurely.

Applicants also are advised that in the case of inventions made in the United States, the Director of the USPTO must issue a license before applicants can apply for a patent in a foreign country. The filing of a U.S. patent application serves as a request for a foreign filing license. The application's filing receipt contains further information and guidance as to the status of applicant's license for foreign filing.

Applicants may wish to consult the USPTO booklet, "General Information Concerning Patents" (specifically, the section entitled "Treaties and Foreign Patents") for more information on timeframes and deadlines for filing foreign patent applications. The guide is available either by contacting the USPTO Contact Center at 800-786-9199, or it can be viewed on the USPTO website at http://www.uspto.gov/web/offices/pac/doc/general/index.html.

For information on preventing theft of your intellectual property (patents, trademarks and copyrights), you may wish to consult the U.S. Government website, http://www.stopfakes.gov. Part of a Department of Commerce initiative, this website includes self-help "toolkits" giving innovators guidance on how to protect intellectual property in specific countries such as China, Korea and Mexico. For questions regarding patent enforcement issues, applicants may call the U.S. Government hotline at 1-866-999-HALT (1-866-999-4158).

LICENSE FOR FOREIGN FILING UNDER

Title 35, United States Code, Section 184

Title 37, Code of Federal Regulations, 5.11 & 5.15

GRANTED

The applicant has been granted a license under 35 U.S.C. 184, if the phrase "IF REQUIRED, FOREIGN FILING LICENSE GRANTED" followed by a date appears on this form. Such licenses are issued in all applications where the conditions for issuance of a license have been met, regardless of whether or not a license may be required as set forth in 37 CFR 5.15. The scope and limitations of this license are set forth in 37 CFR 5.15(a) unless an earlier license has been issued under 37 CFR 5.15(b). The license is subject to revocation upon written notification. The date indicated is the effective date of the license, unless an earlier license of similar scope has been granted under 37 CFR 5.13 or 5.14.

This license is to be retained by the licensee and may be used at any time on or after the effective date thereof unless it is revoked. This license is automatically transferred to any related applications(s) filed under 37 CFR 1.53(d). This license is not retroactive.

The grant of a license does not in any way lessen the responsibility of a licensee for the security of the subject matter as imposed by any Government contract or the provisions of existing laws relating to espionage and the national security or the export of technical data. Licensees should apprise themselves of current regulations especially with respect to certain countries, of other agencies, particularly the Office of Defense Trade Controls, Department of

State (with respect to Arms, Munitions and Implements of War (22 CFR 121-128)); the Bureau of Industry and Security, Department of Commerce (15 CFR parts 730-774); the Office of Foreign AssetsControl, Department of Treasury (31 CFR Parts 500+) and the Department of Energy.

NOT GRANTED

No license under 35 U.S.C. 184 has been granted at this time, if the phrase "IF REQUIRED, FOREIGN FILING LICENSE GRANTED" DOES NOT appear on this form. Applicant may still petition for a license under 37 CFR 5.12, if a license is desired before the expiration of 6 months from the filing date of the application. If 6 months has lapsed from the filing date of this application and the licensee has not received any indication of a secrecy order under 35 U.S.C. 181, the licensee may foreign file the application pursuant to 37 CFR 5.15(b).

UNITED STATES PATENT AND TRADEMARK OFFICE

UNITED STATES DEPARTMENT OF COMMERCE
United States Patent and Trademark Office
Address: COMMISSIONER FOR PATENTS
P.O. Box 1450
Alexandria, Virginia 22313-1450
www.uspto.gov

APPL NO.	FILING OR 371 (c) DATE	ART UNIT	FIL FEE REC'D	ATTY.DOCKET NO	DRAWINGS	TOT CLMS	IND CLMS
60/791,134	04/11/2006		200	PU61939P			

CONFIRMATION NO. 5867

CORRECTED FILING RECEIPT

OC000000019082247

GLAXOSMITHKLINE
Corporate Intellectual Property - UW2220
709 Swedeland Road
King of Prussia, PA 19406-0939

Date Mailed: 06/02/2006

Receipt is acknowledged of this provisional Patent Application. It will not be examined for patentability and will become abandoned not later than twelve months after its filing date. Be sure to provide the U.S. APPLICATION NUMBER, FILING DATE, NAME OF APPLICANT, and TITLE OF INVENTION when inquiring about this application. Fees transmitted by check or draft are subject to collection. Please verify the accuracy of the data presented on this receipt. **If an error is noted on this Filing Receipt, please mail to the Commissioner for Patents P.O. Box 1450 Alexandria Va 22313-1450. Please provide a copy of this Filing Receipt with the changes noted thereon. If you received a "Notice to File Missing Parts" for this application, please submit any corrections to this Filing Receipt with your reply to the Notice. When the USPTO processes the reply to the Notice, the USPTO will generate another Filing Receipt incorporating the requested corrections (if appropriate).**

Applicant(s)

Michael G. Darcy, Collegeville, PA;
Steven D. Knight, Collegeville, PA;
Cynthia A. Parrish, Collegeville, PA;

Power of Attorney:

Tony Peng–56115

If Required, Foreign Filing License Granted: 04/28/2006

The country code and number of your priority application, to be used for filing abroad under the Paris Convention, is US60/791,134

Projected Publication Date: None, application is not eligible for pre-grant publication

Non-Publication Request: Not applicable

Early-Publication Request: Not applicable

Title

Thiazolidinedione derivatives as PI3 kinase inhibitors

PROTECTING YOUR INVENTION OUTSIDE THE UNITED STATES

Since the rights granted by a U.S. patent extend only throughout the territory of the United States and have no effect in a foreign country, an inventor who wishes patent protection in another country must apply for a patent in a specific country or in regional patent offices. Applicants may wish to consider the filing of an international application under the Patent Cooperation Treaty (PCT). An international (PCT) application generally has the same effect as a regular national patent application in each PCT-member country. The PCT process **simplifies** the filing of patent applications on the same invention in member countries, but **does not result** in a grant of "an international patent" and does not eliminate the need of applicants to file additional documents and fees in countries where patent protection is desired.

Almost every country has its own patent law, and a person desiring a patent in a particular country must make an application for patent in that country in accordance with its particular laws. Since the laws of many countries differ in various respects from the patent law of the United States, applicants are advised to seek guidance from specific foreign countries to ensure that patent rights are not lost prematurely.

Applicants also are advised that in the case of inventions made in the United States, the Director of the USPTO must issue a license before applicants can apply for a patent in a foreign country. The filing of a U.S. patent application serves as a request for a foreign filing license. The application's filing receipt contains further information and guidance as to the status of applicant's license for foreign filing.

Applicants may wish to consult the USPTO booklet, "General Information Concerning Patents" (specifically, the section entitled "Treaties and Foreign Patents") for more information on timeframes and deadlines for filing foreign patent applications. The guide is available either by contacting the USPTO Contact Center at 800-786-9199, or it can be viewed on the USPTO website at http://www.uspto.gov/web/offices/pac/doc/general/index.html.

For information on preventing theft of your intellectual property (patents, trademarks and copyrights), you may wish to consult the U.S. Government website, http://www.stopfakes.gov. Part of a Department of Commerce initiative, this website includes self-help "toolkits" giving innovators guidance on how to protect intellectual property in specific countries such as China, Korea and Mexico. For questions regarding patent enforcement issues, applicants may call the U.S. Government hotline at 1-866-999-HALT (1-866-999-4158).

LICENSE FOR FOREIGN FILING UNDER
Title 35, United States Code, Section 184
Title 37, Code of Federal Regulations, 5.11 & 5.15

GRANTED

The applicant has been granted a license under 35 U.S.C. 184, if the phrase "IF REQUIRED, FOREIGN FILING LICENSE GRANTED" followed by a date appears on this form. Such licenses are issued in all applications where the conditions for issuance of a license have been met, regardless of whether or not a license may be required as set forth in 37 CFR 5.15. The scope and limitations of this license are set forth in 37 CFR 5.15(a) unless an earlier license has been issued under 37 CFR 5.15(b). The license is subject to revocation upon written notification. The date indicated is the effective date of the license, unless an earlier license of similar scope has been granted under 37 CFR 5.13 or 5.14.

This license is to be retained by the licensee and may be used at any time on or after the effective date thereof unless it is revoked. This license is automatically transferred to any related applications(s) filed under 37 CFR 1.53(d). This license is not retroactive.

The grant of a license does not in any way lessen the responsibility of a licensee for the security of the subject matter as imposed by any Government contract or the provisions of existing laws relating to espionage and the national security or the export of technical data. Licensees should apprise themselves of current regulations especially with respect to certain countries, of other agencies, particularly the Office of Defense Trade Controls, Department of State (with respect to Arms, Munitions and Implements of War (22 CFR 121-128)); the Bureau of Industry and Security, Department of Commerce (15 CFR parts 730-774); the Office of Foreign Assets Control, Department of Treasury (31 CFR Parts 500+) and the Department of Energy.

NOT GRANTED

No license under 35 U.S.C. 184 has been granted at this time, if the phrase "IF REQUIRED, FOREIGN FILING LICENSE GRANTED" DOES NOT appear on this form. Applicant may still petition for a license under 37 CFR 5.12, if a license is desired before the expiration of 6 months from the filing date of the application. If 6 months has lapsed from the filing date of this application and the licensee has not received any indication of a secrecy order under 35 U.S.C. 181, the licensee may foreign file the application pursuant to 37 CFR 5.15(b).

UNITED STATES PATENT AND TRADEMARK OFFICE

COMMISSIONER FOR PATENTS
UNITED STATES PATENT AND TRADEMARK OFFICE
P.O. BOX 1450
ALEXANDRIA, VA 22313-1450
www.uspto.gov

WILLIAM S. PERELL
301 JUNIPERO BOULEVARD
SUITE 220
SAN FRANCISCO, CA 94127

COPY MAILED

SEP 1 2 2007

OFFICE OF PETITIONS

In re Application of
William S. Perell
Application No. 60/791,530
Filed: April 13, 2006
Attorney Docket No. Per 20 Pop . Top

ON PETITION

This is a decision on the petition under 37 CFR 1.137(b), filed by February 9, 2007, to revive the above-identified application.

The petition is **GRANTED**.

The application became abandoned for failure to timely respond to a Notice to File Missing Parts mailed May 2, 2006. The notice set a two-month period to respond and required (1) $25.00 to complete the basic filing fee and (2) the surcharge as set forth in 37 CFR 1.16(g) of $25. A Notice of Abandonment was mailed on January 11, 2007. On February 9, 2007, the present petition was filed.

The petition satisfies the requirements of 37 CFR 1.137(b) in that petitioner has supplied (1) the reply in the form of the balance of the basic filing fee and the $25 surcharge; (2) the petition fee of $750; and (3) an adequate statement of unintentional delay. Accordingly, the failure to timely reply to the Notice of April 24, 2006 is accepted as being unintentionally delayed.

Subject to the provisions of 35 U.S.C. § 119(e)(3) and § 1.7(b), a provisional application will not be regarded as pending after twelve months from its filing date under any circumstances.

Telephone inquires related to this decision should be directed to the undersigned at (571) 272-3204.

Sherry D. Brinkley
Petitions Examiner
Office of Petitions

UNITED STATES PATENT AND TRADEMARK OFFICE

Commissioner for Patents
United States Patent and Trademark Office
P.O. Box 1450
Alexandria, VA 22313-1450
www.uspto.gov

DLA PIPER RUDNICK GRAY CARY US, LLP
2000 UNIVERSITY AVENUE
E. PALO ALTO CA 94303-2248

COPY MAILED

AUG 07 2006

OFFICE OF PETITIONS

In re Application of	:
Justice, et al.	: DECISION GRANTING
Application No. 60/791,792	: PETITION
Filed: April 13, 2006	:
Attorney Docket No. 358653-991120	:
For: HIERARCHAL USER SORTING IDENTIFIERS (HUSI) IN AN EMAIL SYSTEM	

This is a decision on the petition, filed June 26, 2006, requesting that the above-identified application be accorded a filing date of April 12, 2006 rather than the presently accorded filing date of April 13, 2006. The petition will be treated under 37 CFR 1.10(c).

Petitioners contend that the above-identified application was deposited in the United States Postal Service (USPS) Express Mail service on April 12, 2006. In support of this contention, petitioners have supplied with the present petition a copy of a USPS Track and Confirm printout that shows a package associated with Express Mail label no. EV561156787US was accepted by the USPS on April 12, 2006. A review of the application file reveals that the Provisonal Application for Patent Cover Sheet references Express Mail Receipt Number: EV561156787US.

The evidence presented establishes that the Express Mail package associated with Express Mail label no. EV561156787US was deposited with the USPS on April 12, 2006.

Accordingly, the petition is granted.

No fee has been or will be charged in connection with this petition.

The application is being returned to the Office of Initial Patent Examination for correction of the filing date to **April 12, 2006**.

Any inquiries related to this decision should be directed to the undersigned at (571) 272-3230.

Shirene Willis Brantley
Petitions Attorney
Office of Petitions

UNITED STATES PATENT AND TRADEMARK OFFICE

Commissioner for Patents
United States Patent and Trademark Office
P.O. Box 1450
Alexandria, VA 22313-1450
www.uspto.gov

ROBERT DEBERARDINE
ABBOTT LABORATORIES
100 ABBOTT PARK ROAD
DEPT. 377/AP6A
ABBOTT PARK IL 60064-6008

COPY MAILED

JUN 14 2007

OFFICE OF PETITIONS

In re Application of	:	
Krill A. Lukin, et al.	:	
Application No. 60/792,099	:	DECISION ON PETITION
Filed: April 14, 2006	:	
Attorney Docket No. 8716USL1	:	

This is a decision on the petition under the unintentional provisions of 37 CFR 1.137(b), filed January 26, 2007, to revive the above-identified application.

The petition is **GRANTED**.

The application became abandoned for failure to reply in a timely manner to the Notice to File Missing Parts of a Provisional Application (Notice), mailed May 1, 2006. The Notice set a period for reply of two (2) months from the mail date of the Notice. No extensions of time under the provisions of 37 CFR 1.136(a) were obtained. Accordingly, the application became abandoned on July 2, 2006.

The petition satisfies the requirements of 37 CFR 1.137(b) in that petitioner has supplied (1) the reply in the form of a reply with surcharge of $50, (2) the petition fee of 1500; and (3) a proper statement of unintentional delay.

Telephone inquiries concerning this decision should be directed to April Wise at (571) 272-1642.

This application is being referred back to the Office of Initial Patent Examination for further processing of the reply received January 26, 2007,

Irvin Dingle
Petitions Examiner
Office of Petitions

UNITED STATES PATENT AND TRADEMARK OFFICE

Commissioner for Patents
United States Patent and Trademark Office
P.O. Box 1450
Alexandria, VA 22313-1450
www.uspto.gov

BAKER & MCKENZIE LLP
PENNZOIL PLACE, SOUTH TOWER
711 LOUISIANA, SUITE 3400
HOUSTON TX 77002-2716

COPY MAILED
MAY 30 2006
OFFICE OF PETITIONS

In re Application of	:
Paul K. Samples et al.	:
Application No. 60/792,101	: DECISION GRANTING
Filed: April 14, 2006	: PETITION
Attorney Docket Number: 31176280-061001	:
	:

This is a decision on the petition filed May 9, 2006, under 37 CFR 1.181, in response to the Notice of Incomplete Nonprovisional Application mailed April 28, 2006, requesting that the above identified application be accorded a filing date of April 14, 2006. The petition is treated under 37 CFR 1.53.

On April 14, 2006 the application was filed. On April 28, 2006, the Office of Initial Patent Examination mailed a "Notice of Incomplete Nonprovisional Application" stating that the application had not been accorded a filing date because the application was deposited without drawings and that the filing date of the application would be the date of receipt of the drawings.

The instant petition claims that 5 sheets of drawings which contained Figures 1-5 was filed with the other application papers on April 14, 2006 and proffers as proof of submission of drawings with the application papers filed April 14, 2006 a postcard receipt which shows an official USPTO date-stamp of April 14, 2006, and the above-identified application number, and acknowledges receipt of, *inter alia*, 5 sheets of drawings having been supplied with the application papers filed April 14, 2006.

Upon review of the record, no sheets of drawings deposited on April 14, 2006, have been located among the application papers. However, the evidence is convincing that the application papers deposited on April 14, 2006, included 5 sheets of drawings, which were subsequently misplaced in the USPTO. Therefore, the application, including the 5 sheets of drawings, was complete on filing and entitled to a filing date of April 14, 2006.

In view of the above, the petition is **GRANTED**.

The Notice of Incomplete Nonprovisional Application mailed April 28, 2006, is withdrawn. Therefore, no petition fee is due and none has been charged.

The application is being returned to the Office of Initial Patent Examination for reprocessing with a filing date of April 14, 2006, using the application papers filed on April 14, 2006 and the 5 sheets of drawings supplied with the petition on May 9, 2006.

Telephone inquiries related to this decision should be directed to the undersigned Petitions Attorney at (571) 272-3212.

Patricia Faison-Ball

Patricia Faison-Ball
Senior Petitions Attorney
Office of Petitions

UNITED STATES PATENT AND TRADEMARK OFFICE

COMMISSIONER FOR PATENTS
UNITED STATES PATENT AND TRADEMARK OFFICE
P.O. BOX 1450
ALEXANDRIA, VA 22313-1450
www.uspto.gov

Paper No.

COZEN O' CONNOR , P.C.
1900 MARKET STREET
PHILADELPHIA, PA 19103

COPY MAILED
JUN 26 2006
OFFICE OF PETITIONS

In re Application of :
Alan Breen : DECISION ON PETITION
Application No. 60/792,108 :
Filed: April 13, 2006 :
Atty Docket No. KLBS0010-001 :

This is a decision on the "PETITION UNDER 37 CFR §1.10(c)," filed May 17, 2006, requesting that the above-identified application be accorded a filing date of April 13, 2006, rather than the presently accorded filing date of April 14, 2006.

Petitioner maintains that the above-identified application was deposited with the Office by way of the "Express Mail Post Office to Addressee" service of the United States Postal Service on April 13, 2006, under Express Mail mailing label No. EV513558750US, pursuant to § 1.10(a). Petitioner argues that the Express Mail label shows a "date-in" of April 13, 2006, and thus, the application is entitled to a filing date of April 13, 2006. In support of the petition, petitioner submits a true copy of the Express Mail mailing label.

A review of the application papers presently accorded a filing date of April 14, 2006 reveals that the "Express Mail" mailing label No. EV513558750US is present on the transmittal letter for the application. Further, the transmittal specifically identifies the papers that constitute the original application disclosure. Thus, it is concluded that the number was placed on the papers that constitute the correspondence prior to mailing.

The copy of the "Express Mail" mailing label shows a handwritten "date-in" of "31406," which of course is not consistent with the presently accorded filing date of April 14, 2006. More

importantly, the label bears an Official USPS date-stamp of April 13, 2006.

In view thereof, the petition is **GRANTED**.

No petition fee is required and none has been charged. The $130 fee submitted is being refunded to petitioner's Deposit Account, as authorized.

This application is being sent to the Office of Initial Patent Examination for **correction of the filing date to April 13, 2006** and **mailing of a corrected filing receipt**.

Telephone inquiries specific to this decision may be directed to the undersigned at (571) 272-3219.

Nancy Johnson
Senior Petitions Attorney
Office of Petitions

UNITED STATES PATENT AND TRADEMARK OFFICE

Commissioner for Patents
United States Patent and Trademark Office
P.O. Box 1450
Alexandria, VA 22313-1450
www.uspto.gov

Geoff Pardo
Spray Venture Partners
2330 Washington St.
Newton, MA 02462

COPY MAILED

MAR 1 0 2008

OFFICE OF PETITIONS

In re Application of	:	
Geoffrey Pardo, et. al.	:	
Application No. 60/792,587	:	ON PETITION
Filed: April 18, 2006	:	
Attorney Docket No. N/A	:	

This is a decision on the petition under 37 CFR 1.137(b), filed on March 21, 2007, to revive the above-identified application.

The application became abandoned for failure to reply in a timely manner to the Notice to File Missing Parts of Provisional Application mailed June 15, 2006. A Notice of Abandonment was mailed on February 23, 2007.

It is not apparent whether the statement of unintentional delay was signed by a person who would have been in a position of knowing that the entire delay in filing the required reply from the due date for the reply until the filing of a grantable petition pursuant to 37 CFR 1.137(b) was unintentional. Nevertheless, in accordance with 37 CFR 10.18, the statement is accepted as constituting a certification of unintentional delay. However, in the event that petitioner has no knowledge that the delay was unintentional, petitioner must make such an inquiry to ascertain that, in fact, the delay was unintentional. If petitioner discovers that the delay was intentional, petitioner must so notify the Office.

Further, there is no indication that the person signing the instant petition was ever given a power of attorney or authorization of agent to prosecute the above-identified application. However, in accordance with 37 CFR 1.34(a), the signature of Kenneth S. Roberts appearing on the petition shall constitute a representation to the United States Patent and Trademark Office that he is authorized to represent the particular party in whose behalf he acts.

The petition satisfies the requirements of 37 CFR 1.137(b), in that, petitioner has supplied (1) the reply in the form of $250 for 78 pages in excess of 100; (2) the petition fee of $750; and (3) a proper statement of unintentional delay. Therefore, the petition is **GRANTED**.

Since there is no power of attorney or authorization of agent given to Mr. Roberts, the Change of Correspondence Address filed on March 21, 2007 cannot be accepted. A courtesy copy of this decision is being mailed to petitioner. Nevertheless, all future correspondence regarding this application file will be directed solely to the address of record until otherwise instructed.

This application file is being referred to the Office of Patent Application Processing for further processing.

Telephone inquiries concerning this decision should be directed to the undersigned at (571) 272-3226.

Andrea Smith
Petitions Examiner
Office of Petitions

cc: Kenneth Roberts
Orrick Herrington and Sutcliffe, LLP
4 Park Plaza Ste 1600
Irvine, CA 92614

UNITED STATES PATENT AND TRADEMARK OFFICE

COMMISSIONER FOR PATENTS
UNITED STATES PATENT AND TRADEMARK OFFICE
P.O. BOX 1450
ALEXANDRIA, VA 22313-1450
WWW.USPTO.GOV

Paper No. None

BURR & BROWN
PO BOX 7068
SYRACUSE NY 13261-7068

COPY MAILED
SEP 22 2006
OFFICE OF PETITIONS

In re Application of	:	
Antony Paul Van De Ven et al.	:	
Application No. 60/792,860	:	DECISION ON PETITION UNDER
Filed: April 18, 2006	:	37 C.F.R. §1.182
Attorney Docket No.: 931_013	:	
PRO	:	
Title: LIGHTING DEVICE AND	:	
LIGHTING METHOD	:	

This is a decision on the petition filed July 31, 2006, requesting that the above-identified application, including Figures one through four, be accorded a filing date of April 18, 2006 as part of the original disclosure.

The application was deposited on April 18, 2006. However, on May 30, 2006, the Office of Initial Patent Examination (OIPE) mailed a "Notice of Incomplete Provisional Application" (notice), stating that the application had not been accorded a filing date, and advising applicants that a filing date would be accorded upon the deposit of drawings. The notice set a two-month period of reply.

In response, on July 31, 2006, applicants filed the present petition. It is noted that July 30, 2006 fell on a Saturday. The petition is further accompanied by a copy of Figures one through four, along with a copy of applicants' postcard receipt acknowledging receipt of "4 sheets of Drawings (Figs. 1-4)" in the United States Patent and Trademark Office (Office) on April 18, 2006. Applicants request that Figures one through four be accorded a filing date of April 18, 2006.

Upon review of the electronic file, no sheets of drawings have been located among the application papers. However, the evidence is convincing that the application papers deposited on April 18, 2006 included four sheets of drawings containing Figures one through four, and these sheets were subsequently misplaced in the Office.

Therefore, the application, including Figures one through four, was complete on filing and entitled to a filing date of April 18, 2006 as part of the original disclosure.

Accordingly, the petition under 37 C.F.R. §1.182 is **GRANTED**.

The notice mailed May 30, 2006 was sent in error, and is hereby **VACATED**. Therefore, no petition fee is necessary, and the petition fee will be refunded to Petitioner's Deposit Account in due course.

OIPE will be advised to process the application with a filing date of April 18, 2006, using the original application papers filed on that date, as well as Figures one through four submitted on July 31, 2006, and for noting in Office records that the sheets containing these figures were present on filing.

Telephone inquiries regarding this decision should be directed to the undersigned at (571) 272-3225. All other inquiries concerning examination procedures or status of the application should be directed to the Technology Center.

Paul Shanoski

Paul Shanoski
Senior Attorney
Office of Petitions
United States Patent and Trademark Office

UNITED STATES PATENT AND TRADEMARK OFFICE

Commissioner for Patents
United States Patent and Trademark Office
P.O. Box 1450
Alexandria, VA 22313-1450
www.uspto.gov
DIW Jan-07

ARMSTRONG WORLD INDUSTRIES, INC.
2500 COLUMBIA AVENUE
P.O. BOX 3001
LANCASTER PA 17604-3001

COPY MAILED

JAN 16 2007

OFFICE OF PETITIONS

In re Application of	:	
Waters et al.	:	
Application No. 60/793177	:	DECISION ON PETITION
Filed: 19 April, 2006	:	
Atty Docket No. 0605	:	

This is a decision on the petition filed on 18 October, 2006, which is treated as a petition under 37 CFR 1.53(e) requesting that the above-identified provisional application be accorded a filing date of 19 April, 2006.

The petition is **granted**.

The instant provisional application papers as filed consisted of 11 sheets of drawings also containing text. On 15 August, 2006, however, the Office of Initial Patent Examination sent a Notice stating that the application had been deposited without a specification the filing date would be the date of receipt of the missing specification.

In reply, the present petition was filed on 18 October, 2006, accompanied by a duplicate copy of the 11 sheets of drawings with text.

Petitioners assert that the specification was present among the 11 sheets of drawings also containing text. Specifically, petitioners assert that the 11 sheets containing the drawing figures and text constitute the application specification. Petitioners urge that since the 11 pages filed on 19 April, 2006 contain labeled drawings which include words and/or phrases, that the application papers contain an adequate written description under 35 USC 112. As such, petitioners request that the application be accorded 19 April, 2006, as the filing date.

Pursuant to 35 USC 111(b)(1)(A);(B), in order to obtain a filing date, a provisional application must provide the specification required by 35 USC 112 ¶ 1, and a drawing as prescribed by 35 USC 113. 37 CFR 1.53(c)(1) also requires the inclusion of a cover sheet pursuant to 37 CFR 1.51(c)(1), a condition clearly met herein on 19 April, 2006, as was the submission of the filing fee required by 35 USC 41. All conditions for obtaining a filing date in this provisional application were clearly met on 19 April, 2006.

Under the facts of this case, this provisional application is entitled, for a filing date, to the date of receipt of the 11 sheets of drawings also containing text. There is no explicit requirement that precludes the obtaining of a filing date for a provisional application when the specification and drawings are, as here, not separated.

The Notice of 15 August, 2006, was mailed in error and is vacated.

The copies of application papers filed with the petition will not be considered to be part of this provisional application as filed on 19 April, 2006.

No petition fee is due. The petition fee has been credited to counsel's deposit account.

This provisional application is being forwarded to the Office of Initial Patent Examination (OIPE), Customer Corrections, for further processing with a filing date of 19 April, 2006.

Telephone inquiries should be directed to the undersigned at 571-272-3231. Inquiries related to OIPE processing should be directed to OIPE at 571-272-4000.

DWood

Douglas I. Wood
Senior Petitions Attorney
Office of Petitions

UNITED STATES PATENT AND TRADEMARK OFFICE

Commissioner for Patents
United States Patent and Trademark Office
P.O. Box 1450
Alexandria, VA 22313-1450
www.uspto.gov

OIPE
OCT 3 1 2007
PATENTS & TRADEMARK OFFICE

RECEIVED
JAN 1 6 REC'D
By

ARMSTRONG WORLD INDUSTRIES, INC.
2500 COLUMBIA AVENUE
P.O. BOX 3001
LANCASTER PA 17604-3001

COPY MAILED
JAN 1 6 2007
OFFICE OF PETITIONS

In re Application of	:	
Waters et al.	:	
Application No. 60/793177	:	DECISION ON PETITION
Filed: 19 April, 2006	:	
Atty Docket No. 0605	:	

This is a decision on the petition filed on 18 October, 2006, which is treated as a petition under 37 CFR 1.53(e) requesting that the above-identified provisional application be accorded a filing date of 19 April, 2006.

The petition is **granted**.

The instant provisional application papers as filed consisted of 11 sheets of drawings also containing text. On 15 August, 2006, however, the Office of Initial Patent Examination sent a Notice stating that the application had been deposited without a specification the filing date would be the date of receipt of the missing specification.

In reply, the present petition was filed on 18 October, 2006, accompanied by a duplicate copy of the 11 sheets of drawings with text.

Petitioners assert that the specification was present among the 11 sheets of drawings also containing text. Specifically, petitioners assert that the 11 sheets containing the drawing figures and text constitute the application specification. Petitioners urge that since the 11 pages filed on 19 April, 2006 contain labeled drawings which include words and/or phrases, that the application papers contain an adequate written description under 35 USC 112. As such, petitioners request that the application be accorded 19 April, 2006, as the filing date.

Pursuant to 35 USC 111(b)(1)(A);(B), in order to obtain a filing date, a provisional application must provide the specification required by 35 USC 112 ¶ 1, and a drawing as prescribed by 35 USC 113. 37 CFR 1.53(c)(1) also requires the inclusion of a cover sheet pursuant to 37 CFR 1.51(c)(1), a condition clearly met herein on 19 April, 2006, as was the submission of the filing fee required by 35 USC 41. All conditions for obtaining a filing date in this provisional application were clearly met on 19 April, 2006.

Under the facts of this case, this provisional application is entitled, for a filing date, to the date of receipt of the 11 sheets of drawings also containing text. There is no explicit requirement that precludes the obtaining of a filing date for a provisional application when the specification and drawings are, as here, not separated.

The Notice of 15 August, 2006, was mailed in error and is vacated.

The copies of application papers filed with the petition will not be considered to be part of this provisional application as filed on 19 April, 2006.

No petition fee is due. The petition fee has been credited to counsel's deposit account.

This provisional application is being forwarded to the Office of Initial Patent Examination (OIPE), Customer Corrections, for further processing with a filing date of 19 April, 2006.

Telephone inquiries should be directed to the undersigned at 571-272-3231. Inquiries related to OIPE processing should be directed to OIPE at 571-272-4000.

DWood

Douglas I. Wood
Senior Petitions Attorney
Office of Petitions

UNITED STATES PATENT AND TRADEMARK OFFICE

Commissioner for Patents
United States Patent and Trademark Office
P.O. Box 1450
Alexandria, VA 22313-1450
www.uspto.gov

MORBERN INC.
80, BOUNDARY ROAD
CORNWALL ON K6H 6M1 CA CANADA

COPY MAILED
SEP 25 2006
OFFICE OF PETITIONS

In re Application of	:	
Dilipkumar Desai	:	
Application No. 60/793,258	:	ON PETITION
Filed: April 20, 2006	:	
Attorney Docket No.:	:	

This is a decision on the petition under 37 CFR 1.182, filed July 13, 2006, requesting that the above-identified application retain the presently accorded filing date with the alleged omitted figure included as part of the original disclosure.

The petition is **dismissed**.

On April 20, 2006, the above-identified application was filed. However, on May 23, 2006, the Office of Initial Patent Examination mailed a "Notice of Omitted Items of Provisional Application", stating that application had been accorded a filing date of April 20, 2006, and advising applicant that Figures 11, as described in the specification appeared to have been omitted.

In response, on July 13, 2006, applicant filed the present petition. Applicant supplies the omitted figure and request that the application be amended to include the figures as part of the original disclosure.

Petitioner's attention is directed to section 601.01(b) of the *Manual of Patent Examining Procedure* (MPEP) which states, in pertinent part:

> [a] provisional application will be given a filing date in accordance with 37 CFR 1.53(c) as of the date the written description and any necessary drawings are filed in the Office. The filing date requirements for a provisional application sent forth the 37 CFR 1.53(c) parallel the requirements of a nonprovisional application set forth in 37 CFR 1.53(b), except that no claim is required. Amendments, other than those required to make the provisional application comply with applicable regulations, are not permitted after the filing date of the provisional application.

Further, section 601.01(d) of the MPEP provides that:

> . . . in view of the relatively low filing fee for provisional applications, and the USPTO's desire to minimize the processing of provisional application, the USPTO will not grant petition under 37 CFR 1.182 to accept omitted page(s) or drawing(s) and accord an application filing date as of the date of such submission in provisional applications. The applicant should simply file a new completed provisional application.

The petition is dismissed, accordingly. The instant provisional application will retain the filing date of April 20, 2006, with only those papers filed on that date. The figure supplied on July 13, 2006, will not be included in the disclosure.

The application is file is being directed to the Office of Initial Patent Examination for further processing.

Telephone inquiries concerning this decision may be directed to the undersigned at (571) 272-3222.

Kenya A. McLaughlin
Petitions Attorney
Office of Petitions

UNITED STATES PATENT AND TRADEMARK OFFICE

Commissioner for Patents
United States Patent and Trademark Office
P.O. Box 1450
Alexandria, VA 22313-1450
www.uspto.gov

TORYS LLP
TD CENTRE
79 WELLINGTON STREET WEST
BOX 270D
TORONTO ON M5K 1N2 CA CANADA

COPY MAILED
APR 18 2007
OFFICE OF PETITIONS

In re Application of	:
Susan Amadio et al	:
Application No. 60/793,341	: DECISION GRANTING PETITION
Filed: April 18, 2006	: UNDER 37 CFR 1.137(b)
Attorney Docket No. 00782-2151	:

This is a decision on the petition under 37 CFR 1.137(b), filed January 2, 2007, to revive the above-identified application.

The petition is **GRANTED**.

The petition satisfies the conditions for revival pursuant to the provisions of 37 CFR 1.137(b) in that (1) the reply in the form of an Application Data Sheet; (2) the petition fee; and (3) the required statement of unintentional delay have been received. Accordingly, the reply to the Notices of May 8, 2006 and December 5, 2006, is accepted as having been unintentionally delayed.

Telephone inquiries concerning this decision should be directed to the undersigned at (571) 272-3208.

This matter is being referred to the Office of Initial Patent Examination.

Karen Creasy

Karen Creasy
Petitions Examiner
Office of Petitions

UNITED STATES PATENT AND TRADEMARK OFFICE

Commissioner for Patents
United States Patent and Trademark Office
P.O. Box 1450
Alexandria, VA 22313-1450
www.uspto.gov

BAKER & MCKENZIE LLP
Pennzoil Place, South Tower
711 Louisiana, Suite 3400
HOUSTON TX 77002-2716

COPY MAILED
NOV 03 2006
OFFICE OF PETITIONS

In re Application of :

CRUMP, et al. :
Application No. 60/793,764 : DECISION ON PETITION
Filed: April/21/2006 : TO WITHDRAW
Attorney Docket No. 31176280-059001 : FROM RECORD

This is a decision on the Request to Withdraw as attorney or agent of record under 37 C.F.R. § 1.36(b), filed July 31, 2006.

The request is **APPROVED**.

A grantable request to withdraw as attorney/agent of record must be signed by every attorney/agent seeking to withdraw or contain a clear indication that one attorney is signing on behalf of another/others. A request to withdraw will not be approved unless at least 30 (thirty) days would remain between the date of approval and the later of the expiration date of a time to file a response or the expiration date of the maximum time period which can be extended under 37 C.F.R. § 1.136(a).

The request was signed by Robert Abdon on behalf of all attorneys of record who are associated with customer No.51738. All attorneys/agents associated with the Customer Number 51738 have been withdrawn. Applicant is reminded that there is no attorney of record at this time.

The request to change the correspondence of record is not acceptable as the requested correspondence address is not that of: (1) the first named signing inventor; or (2) an intervening assignee of the entire interest under 37 C.F.R 3.71. All future communications from the Office will be directed to the first named signing inventor at the first copied address below until otherwise properly notified by the applicant.

Telephone inquiries concerning this decision should be directed to the undersigned at 571-272-7253.

Monica A. Graves
Petitions Examiner
Office of Petitions

cc: **Druce K. Crump**
229 Huckleberry Drive
Lake Jackson, TX 77566

cc: **The Dow Chemical Company**
Intellectual Property Section
P O Box 1967
Midland, MI 48641-1967

UNITED STATES PATENT AND TRADEMARK OFFICE

UNITED STATES DEPARTMENT OF COMMERCE
United States Patent and Trademark Office
Address: COMMISSIONER FOR PATENTS
P.O. Box 1450
Alexandria, Virginia 22313-1450
www.uspto.gov

APPLICATION NUMBER	FILING OR 371 (c) DATE	FIRST NAMED APPLICANT	ATTY. DOCKET NO./TITLE
60/793,764	04/21/2006	Druce K. Crump	31176280-059001

CONFIRMATION NO. 9189

OC000000021053985

51738
BAKER & MCKENZIE LLP
Pennzoil Place, South Tower
711 Louisiana, Suite 3400
HOUSTON, TX 77002-2716

Date Mailed: 11/01/2006

NOTICE REGARDING CHANGE OF POWER OF ATTORNEY

This is in response to the Power of Attorney filed 07/31/2006.

- The withdrawal as attorney in this application has been accepted. Future correspondence will be mailed to the new address of record. 37 CFR 1.33.

MONICA A GRAVES
OP (571) 272-7253

FORMER ATTORNEY/AGENT COPY

UNITED STATES PATENT AND TRADEMARK OFFICE

Commissioner for Patents
United States Patent and Trademark Office
P.O. Box 1450
Alexandria, VA 22313-1450
www.uspto.gov
DIW Dec-06

TOWNSEND AND TOWNSEND AND CREW, LLP
TWO EMBARCADERO CENTER
EIGHTH FLOOR
SAN FRANCISCO CA 94111-3834

COPY MAILED

DEC 15 2006

OFFICE OF PETITIONS

In re Application of	:	
Nakamura et al.	:	
Application No. 60/793,977	:	DECISION ON PETITION
Filed: 20 April, 2006	:	
Atty Docket No. 082368-007800US	:	

This is a decision on the petition, filed on 25 August, 2006, which is treated as a petition under 37 CFR 1.10(c), requesting that the above-identified application be accorded a filing date of 20 April, 2006, rather than the presently accorded filing date of 22 April, 2006.

Petitioners allege that the application was deposited in Express Mail service on 20 April, 2006. In support, petitioners have provided a copy of Express Mail Label No. EV724260517US (the same Express Mail number found on the itemized Provisional Application for Patent Cover Sheet accompanying the original application papers located in the official file). Although the Express Mail label bears a "date-in" of "4-22-06" the label also contains an Official USPS postmark dated April, 20, 2006.

In view of the above, the correct date of deposit in Express Mail is 20 April, 2006.

In view of the above, the petition is granted. No petition fee is necessary.

The application is being referred to the Office of Initial Patent Examination for correction of the filing date to **20 April, 2006.**

Telephone inquiries specific to this matter should be directed to the undersigned at (571) 272-3231.

DWood

Douglas I. Wood
Senior Petitions Attorney
Office of Petitions

UNITED STATES PATENT AND TRADEMARK OFFICE

UNITED STATES DEPARTMENT OF COMMERCE
United States Patent and Trademark Office
Address: COMMISSIONER FOR PATENTS
P.O. Box 1450
Alexandria, Virginia 22313-1450
www.uspto.gov

APPL NO.	FILING OR 371 (c) DATE	ART UNIT	FIL FEE REC'D	ATTY.DOCKET NO	DRAWINGS	TOT CLMS	IND CLMS
60/794,016	04/20/2006		200	062891.2151	1		

CONFIRMATION NO. 1122

CORRECTED FILING RECEIPT

OC000000018883645

05073
BAKER BOTTS L.L.P.
2001 ROSS AVENUE
SUITE 600
DALLAS, TX 75201-2980

Date Mailed: 05/22/2006

Receipt is acknowledged of this provisional Patent Application. It will not be examined for patentability and will become abandoned not later than twelve months after its filing date. Be sure to provide the U.S. APPLICATION NUMBER, FILING DATE, NAME OF APPLICANT, and TITLE OF INVENTION when inquiring about this application. Fees transmitted by check or draft are subject to collection. Please verify the accuracy of the data presented on this receipt. **If an error is noted on this Filing Receipt, please mail to the Commissioner for Patents P.O. Box 1450 Alexandria Va 22313-1450. Please provide a copy of this Filing Receipt with the changes noted thereon. If you received a "Notice to File Missing Parts" for this application, please submit any corrections to this Filing Receipt with your reply to the Notice. When the USPTO processes the reply to the Notice, the USPTO will generate another Filing Receipt incorporating the requested corrections (if appropriate).**

Applicant(s)

Ashok T. Desai, Fremont, CA;

Power of Attorney:

Keiko Ichiye--45460

If Required, Foreign Filing License Granted: 05/01/2006

The country code and number of your priority application, to be used for filing abroad under the Paris Convention, is US60/794,016

Projected Publication Date: None, application is not eligible for pre-grant publication

Non-Publication Request: Not applicable

Early-Publication Request: Not applicable

Title

Videoconferencing system

PROTECTING YOUR INVENTION OUTSIDE THE UNITED STATES

Since the rights granted by a U.S. patent extend only throughout the territory of the United States and have no effect in a foreign country, an inventor who wishes patent protection in another country must apply for a patent in a specific country or in regional patent offices. Applicants may wish to consider the filing of an international application under the Patent Cooperation Treaty (PCT). An international (PCT) application generally has the same effect as a regular national patent application in each PCT-member country. The PCT process **simplifies** the filing of patent applications on the same invention in member countries, but **does not result** in a grant of "an international patent" and does not eliminate the need of applicants to file additional documents and fees in countries where patent protection is desired.

Almost every country has its own patent law, and a person desiring a patent in a particular country must make an application for patent in that country in accordance with its particular laws. Since the laws of many countries differ in various respects from the patent law of the United States, applicants are advised to seek guidance from specific foreign countries to ensure that patent rights are not lost prematurely.

Applicants also are advised that in the case of inventions made in the United States, the Director of the USPTO must issue a license before applicants can apply for a patent in a foreign country. The filing of a U.S. patent application serves as a request for a foreign filing license. The application's filing receipt contains further information and guidance as to the status of applicant's license for foreign filing.

Applicants may wish to consult the USPTO booklet, "General Information Concerning Patents" (specifically, the section entitled "Treaties and Foreign Patents") for more information on timeframes and deadlines for filing foreign patent applications. The guide is available either by contacting the USPTO Contact Center at 800-786-9199, or it can be viewed on the USPTO website at http://www.uspto.gov/web/offices/pac/doc/general/index.html.

For information on preventing theft of your intellectual property (patents, trademarks and copyrights), you may wish to consult the U.S. Government website, http://www.stopfakes.gov. Part of a Department of Commerce initiative, this website includes self-help "toolkits" giving innovators guidance on how to protect intellectual property in specific countries such as China, Korea and Mexico. For questions regarding patent enforcement issues, applicants may call the U.S. Government hotline at 1-866-999-HALT (1-866-999-4158).

LICENSE FOR FOREIGN FILING UNDER
Title 35, United States Code, Section 184
Title 37, Code of Federal Regulations, 5.11 & 5.15

GRANTED

The applicant has been granted a license under 35 U.S.C. 184, if the phrase "IF REQUIRED, FOREIGN FILING LICENSE GRANTED" followed by a date appears on this form. Such licenses are issued in all applications where the conditions for issuance of a license have been met, regardless of whether or not a license may be required as set forth in 37 CFR 5.15. The scope and limitations of this license are set forth in 37 CFR 5.15(a) unless an earlier license has been issued under 37 CFR 5.15(b). The license is subject to revocation upon written notification. The date indicated is the effective date of the license, unless an earlier license of similar scope has been granted under 37 CFR 5.13 or 5.14.

This license is to be retained by the licensee and may be used at any time on or after the effective date thereof unless it is revoked. This license is automatically transferred to any related applications(s) filed under 37 CFR 1.53(d). This license is not retroactive.

The grant of a license does not in any way lessen the responsibility of a licensee for the security of the subject matter as imposed by any Government contract or the provisions of existing laws relating to espionage and the national security or the export of technical data. Licensees should apprise themselves of current regulations especially with respect to certain countries, of other agencies, particularly the Office of Defense Trade Controls, Department of State (with respect to Arms, Munitions and Implements of War (22 CFR 121-128)); the Bureau of Industry and Security, Department of Commerce (15 CFR parts 730-774); the Office of Foreign Assets Control, Department of Treasury (31 CFR Parts 500+) and the Department of Energy.

NOT GRANTED

No license under 35 U.S.C. 184 has been granted at this time, if the phrase "IF REQUIRED, FOREIGN FILING LICENSE GRANTED" DOES NOT appear on this form. Applicant may still petition for a license under 37 CFR 5.12, if a license is desired before the expiration of 6 months from the filing date of the application. If 6 months has lapsed from the filing date of this application and the licensee has not received any indication of a secrecy order under 35 U.S.C. 181, the licensee may foreign file the application pursuant to 37 CFR 5.15(b).

UNITED STATES PATENT AND TRADEMARK OFFICE

UNITED STATES DEPARTMENT OF COMMERCE
United States Patent and Trademark Office
Address: COMMISSIONER FOR PATENTS
P.O. Box 1450
Alexandria, Virginia 22313-1450
www.uspto.gov

APPL NO.	FILING OR 371 (c) DATE	ART UNIT	FIL FEE REC'D	ATTY.DOCKET NO	DRAWINGS	TOT CLMS	IND CLMS
60/794,218	04/20/2006		100	25125.PROV			

CONFIRMATION NO. 1602

CORRECTED FILING RECEIPT

OC000000019185813

20551
THORPE NORTH & WESTERN, LLP.
8180 SOUTH 700 EAST, SUITE 200
SANDY, UT 84070

Date Mailed: 06/08/2006

Receipt is acknowledged of this provisional Patent Application. It will not be examined for patentability and will become abandoned not later than twelve months after its filing date. Be sure to provide the U.S. APPLICATION NUMBER, FILING DATE, NAME OF APPLICANT, and TITLE OF INVENTION when inquiring about this application. Fees transmitted by check or draft are subject to collection. Please verify the accuracy of the data presented on this receipt. **If an error is noted on this Filing Receipt, please mail to the Commissioner for Patents P.O. Box 1450 Alexandria Va 22313-1450. Please provide a copy of this Filing Receipt with the changes noted thereon. If you received a "Notice to File Missing Parts" for this application, please submit any corrections to this Filing Receipt with your reply to the Notice. When the USPTO processes the reply to the Notice, the USPTO will generate another Filing Receipt incorporating the requested corrections (if appropriate).**

Applicant(s)

Robert Ang, New York, NY;
David Geliebter, Franklin Lakes, NJ;

Power of Attorney:

Gary Oakeson--44266

If Required, Foreign Filing License Granted: 05/17/2006

The country code and number of your priority application, to be used for filing abroad under the Paris Convention, is US60/794,218

Projected Publication Date: None, application is not eligible for pre-grant publication

Non-Publication Request: Not applicable

Early-Publication Request: Not applicable

**** SMALL ENTITY ****

Title

Vasodialating dressing for use with intravenous catheters

PROTECTING YOUR INVENTION OUTSIDE THE UNITED STATES

Since the rights granted by a U.S. patent extend only throughout the territory of the United States and have no effect in a foreign country, an inventor who wishes patent protection in another country must apply for a patent in a specific country or in regional patent offices. Applicants may wish to consider the filing of an international application under the Patent Cooperation Treaty (PCT). An international (PCT) application generally has the same effect as a regular national patent application in each PCT-member country. The PCT process **simplifies** the filing of patent applications on the same invention in member countries, but **does not result** in a grant of "an international patent" and does not eliminate the need of applicants to file additional documents and fees in countries where patent protection is desired.

Almost every country has its own patent law, and a person desiring a patent in a particular country must make an application for patent in that country in accordance with its particular laws. Since the laws of many countries differ in various respects from the patent law of the United States, applicants are advised to seek guidance from specific foreign countries to ensure that patent rights are not lost prematurely.

Applicants also are advised that in the case of inventions made in the United States, the Director of the USPTO must issue a license before applicants can apply for a patent in a foreign country. The filing of a U.S. patent application serves as a request for a foreign filing license. The application's filing receipt contains further information and guidance as to the status of applicant's license for foreign filing.

Applicants may wish to consult the USPTO booklet, "General Information Concerning Patents" (specifically, the section entitled "Treaties and Foreign Patents") for more information on timeframes and deadlines for filing foreign patent applications. The guide is available either by contacting the USPTO Contact Center at 800-786-9199, or it can be viewed on the USPTO website at http://www.uspto.gov/web/offices/pac/doc/general/index.html.

For information on preventing theft of your intellectual property (patents, trademarks and copyrights), you may wish to consult the U.S. Government website, http://www.stopfakes.gov. Part of a Department of Commerce initiative, this website includes self-help "toolkits" giving innovators guidance on how to protect intellectual property in specific countries such as China, Korea and Mexico. For questions regarding patent enforcement issues, applicants may call the U.S. Government hotline at 1-866-999-HALT (1-866-999-4158).

LICENSE FOR FOREIGN FILING UNDER
Title 35, United States Code, Section 184
Title 37, Code of Federal Regulations, 5.11 & 5.15

GRANTED

The applicant has been granted a license under 35 U.S.C. 184, if the phrase "IF REQUIRED, FOREIGN FILING LICENSE GRANTED" followed by a date appears on this form. Such licenses are issued in all applications where the conditions for issuance of a license have been met, regardless of whether or not a license may be required as set forth in 37 CFR 5.15. The scope and limitations of this license are set forth in 37 CFR 5.15(a) unless an earlier license has been issued under 37 CFR 5.15(b). The license is subject to revocation upon written notification. The date indicated is the effective date of the license, unless an earlier license of similar scope has been granted under 37 CFR 5.13 or 5.14.

This license is to be retained by the licensee and may be used at any time on or after the effective date thereof unless it is revoked. This license is automatically transferred to any related applications(s) filed under 37 CFR 1.53(d). This license is not retroactive.

The grant of a license does not in any way lessen the responsibility of a licensee for the security of the subject matter as imposed by any Government contract or the provisions of existing laws relating to espionage and the national security or the export of technical data. Licensees should apprise themselves of current regulations especially with respect to certain countries, of other agencies, particularly the Office of Defense Trade Controls, Department of State (with respect to Arms, Munitions and Implements of War (22 CFR 121-128)); the Bureau of Industry and Security, Department of Commerce (15 CFR parts 730-774); the Office of Foreign Assets Control, Department of Treasury (31 CFR Parts 500+) and the Department of Energy.

NOT GRANTED

No license under 35 U.S.C. 184 has been granted at this time, if the phrase "IF REQUIRED, FOREIGN FILING LICENSE GRANTED" DOES NOT appear on this form. Applicant may still petition for a license under 37 CFR 5.12, if a license is desired before the expiration of 6 months from the filing date of the application. If 6 months has lapsed from the filing date of this application and the licensee has not received any indication of a secrecy order under 35 U.S.C. 181, the licensee may foreign file the application pursuant to 37 CFR 5.15(b).

UNITED STATES PATENT AND TRADEMARK OFFICE

Commissioner for Patents
United States Patent and Trademark Office
P.O. Box 1450
Alexandria, VA 22313-1450
www.uspto.gov

DARDI & ASSOCIATES, PLLC
220 SOUTH 6TH STREET
SUITE 2000, U.S. BANK PLAZA
MINNEAPOLIS, MN 55402

COPY MAILED

MAR 2 6 2007

OFFICE OF PETITIONS

In re Application of	:	
Chandrashekhar Prabhakar Pathak	:	
Application No. 60/794,384	:	ON PETITION
Filed: April 24, 2006	:	
Attorney Docket No. 3516.18US01	:	

This is a decision on the petition under 37 CFR 1.137(b), filed by facsimile transmission on February 22, 2007, to revive the above-identified application.

The application became abandoned for failure to reply in a timely manner to the Notice to File Missing Parts of Provisional Application mailed May 19, 2006. A Notice of Abandonment was mailed on January 23, 2007.

The petition satisfies the requirements of 37 CFR 1.137(b), in that, petitioner has supplied (1) the reply in the form of a provisional application cover sheet and a $25 surcharge for the late filing of the provisional cover sheet; (2) the petition fee of $750; and (3) an adequate statement of unintentional delay. Therefore, the petition is **GRANTED**.

This application file is being referred to the Office of Initial Patent Examination for further processing.

Telephone inquiries concerning this decision should be directed to the undersigned at (571) 272-3226.

Andrea Smith
Petitions Examiner
Office of Petitions

UNITED STATES PATENT AND TRADEMARK OFFICE

Commissioner for Patents
United States Patent and Trademark Office
P.O. Box 1450
Alexandria, VA 22313-1450
www.uspto.gov

FISH & RICHARDSON, P.C.
PO BOX 1022
MINNEAPOLIS MN 55440-1022

COPY MAILED

JUL 0 5 2006

OFFICE OF PETITIONS

In re Application of :
Salomon, et al. :
Application No. 60/795,414 :
Filed: April 26, 2006 :
Attorney Docket No. 19796-015P01 :
For: METHOD, SOFTWARE, AND
SYSTEM MONITORING SUBSTANCES

ON PETITION

This is a decision on the petition under 37 CFR 1.10(c), filed June 15, 2006, requesting that the above-identified application be accorded a filing date of April 27, 2006, rather than the presently accorded filing date of April 26, 2006.

Petitioners contend that the above-identified application was deposited in the United States Postal Service (USPS) Express Mail service on April 27, 2006. In support of this contention, petitioners have supplied with the present petition a copy of Express Mail Receipt No. EV750542048US, bearing a "date-in" of what appears to be"1 27 06" and a postal date stamp of "APR 27 2006". The original Provisional Application for Patent Cover Sheet found in the application file references Express Mail Receipt Number: EV750542048US.

In view of the above, the petition is **granted**.

No fee has been or will be charged in connection with this matter.

This application file is being forwarded to the Office of Initial Patent Examination for further processing with a filing date of **April 27, 2006.**

Telephone inquiries concerning this matter should be directed to the undersigned at (571) 272-3230.

Shirene Willis Brantley
Senior Petitions Attorney
Office of Petitions

CC: FISH & RICHARDSON P.C.
1717 MAIN STREET
SUITE 5000
DALLAS, TX 75201

UNITED STATES PATENT AND TRADEMARK OFFICE

UNITED STATES DEPARTMENT OF COMMERCE
United States Patent and Trademark Office
Address: COMMISSIONER FOR PATENTS
P.O. Box 1450
Alexandria, Virginia 22313-1450
www.uspto.gov

APPL NO.	FILING OR 371 (c) DATE	ART UNIT	FIL FEE REC'D	ATTY.DOCKET NO	DRAWINGS	TOT CLMS	IND CLMS
60/795,414	04/27/2006		950	19796-015P01	17		

CONFIRMATION NO. 9448

CORRECTED FILING RECEIPT

OC000000019365397

32864
FISH & RICHARDSON, P.C.
PO BOX 1022
MINNEAPOLIS, MN 55440-1022

Date Mailed: 06/22/2006

Receipt is acknowledged of this provisional Patent Application. It will not be examined for patentability and will become abandoned not later than twelve months after its filing date. Be sure to provide the U.S. APPLICATION NUMBER, FILING DATE, NAME OF APPLICANT, and TITLE OF INVENTION when inquiring about this application. Fees transmitted by check or draft are subject to collection. Please verify the accuracy of the data presented on this receipt. **If an error is noted on this Filing Receipt, please mail to the Commissioner for Patents P.O. Box 1450 Alexandria Va 22313-1450. Please provide a copy of this Filing Receipt with the changes noted thereon. If you received a "Notice to File Missing Parts" for this application, please submit any corrections to this Filing Receipt with your reply to the Notice. When the USPTO processes the reply to the Notice, the USPTO will generate another Filing Receipt incorporating the requested corrections (if appropriate).**

Applicant(s)

Thomas Salomon, Rauenberg, GERMANY;
Ralf Coenning, Markdorf, GERMANY;

Power of Attorney:

Michael Cox--47505

If Required, Foreign Filing License Granted: 05/18/2006

The country code and number of your priority application, to be used for filing abroad under the Paris Convention, is US60/795,414

Projected Publication Date: None, application is not eligible for pre-grant publication

Non-Publication Request: Not applicable

Early-Publication Request: Not applicable

Title

Method, software, and system monitoring substances

PROTECTING YOUR INVENTION OUTSIDE THE UNITED STATES

Since the rights granted by a U.S. patent extend only throughout the territory of the United States and have no effect in a foreign country, an inventor who wishes patent protection in another country must apply for a patent in a specific country or in regional patent offices. Applicants may wish to consider the filing of an international application under the Patent Cooperation Treaty (PCT). An international (PCT) application generally has the same effect as a regular national patent application in each PCT-member country. The PCT process **simplifies** the filing of patent applications on the same invention in member countries, but **does not result** in a grant of "an international patent" and does not eliminate the need of applicants to file additional documents and fees in countries where patent protection is desired.

Almost every country has its own patent law, and a person desiring a patent in a particular country must make an application for patent in that country in accordance with its particular laws. Since the laws of many countries differ in various respects from the patent law of the United States, applicants are advised to seek guidance from specific foreign countries to ensure that patent rights are not lost prematurely.

Applicants also are advised that in the case of inventions made in the United States, the Director of the USPTO must issue a license before applicants can apply for a patent in a foreign country. The filing of a U.S. patent application serves as a request for a foreign filing license. The application's filing receipt contains further information and guidance as to the status of applicant's license for foreign filing.

Applicants may wish to consult the USPTO booklet, "General Information Concerning Patents" (specifically, the section entitled "Treaties and Foreign Patents") for more information on timeframes and deadlines for filing foreign patent applications. The guide is available either by contacting the USPTO Contact Center at 800-786-9199, or it can be viewed on the USPTO website at http://www.uspto.gov/web/offices/pac/doc/general/index.html.

For information on preventing theft of your intellectual property (patents, trademarks and copyrights), you may wish to consult the U.S. Government website, http://www.stopfakes.gov. Part of a Department of Commerce initiative, this website includes self-help "toolkits" giving innovators guidance on how to protect intellectual property in specific countries such as China, Korea and Mexico. For questions regarding patent enforcement issues, applicants may call the U.S. Government hotline at 1-866-999-HALT (1-866-999-4158).

LICENSE FOR FOREIGN FILING UNDER
Title 35, United States Code, Section 184
Title 37, Code of Federal Regulations, 5.11 & 5.15

GRANTED

The applicant has been granted a license under 35 U.S.C. 184, if the phrase "IF REQUIRED, FOREIGN FILING LICENSE GRANTED" followed by a date appears on this form. Such licenses are issued in all applications where the conditions for issuance of a license have been met, regardless of whether or not a license may be required as set forth in 37 CFR 5.15. The scope and limitations of this license are set forth in 37 CFR 5.15(a) unless an earlier license has been issued under 37 CFR 5.15(b). The license is subject to revocation upon written notification. The date indicated is the effective date of the license, unless an earlier license of similar scope has been granted under 37 CFR 5.13 or 5.14.

This license is to be retained by the licensee and may be used at any time on or after the effective date thereof unless it is revoked. This license is automatically transferred to any related applications(s) filed under 37 CFR 1.53(d). This license is not retroactive.

The grant of a license does not in any way lessen the responsibility of a licensee for the security of the subject matter as imposed by any Government contract or the provisions of existing laws relating to espionage and the national security or the export of technical data. Licensees should apprise themselves of current regulations especially with respect to certain countries, of other agencies, particularly the Office of Defense Trade Controls, Department of State (with respect to Arms, Munitions and Implements of War (22 CFR 121-128)); the Bureau of Industry and Security, Department of Commerce (15 CFR parts 730-774); the Office of Foreign Assets Control, Department of Treasury (31 CFR Parts 500+) and the Department of Energy.

NOT GRANTED

No license under 35 U.S.C. 184 has been granted at this time, if the phrase "IF REQUIRED, FOREIGN FILING LICENSE GRANTED" DOES NOT appear on this form. Applicant may still petition for a license under 37 CFR 5.12, if a license is desired before the expiration of 6 months from the filing date of the application. If 6 months has lapsed from the filing date of this application and the licensee has not received any indication of a secrecy order under 35 U.S.C. 181, the licensee may foreign file the application pursuant to 37 CFR 5.15(b).

UNITED STATES PATENT AND TRADEMARK OFFICE

UNITED STATES DEPARTMENT OF COMMERCE
United States Patent and Trademark Office
Address: COMMISSIONER FOR PATENTS
P.O. Box 1450
Alexandria, Virginia 22313-1450
www.uspto.gov

APPL NO.	FILING OR 371 (c) DATE	ART UNIT	FIL FEE REC'D	ATTY.DOCKET NO	DRAWINGS	TOT CLMS	IND CLMS
60/795,481	04/26/2006		200	11151/L/SYNX/SYNX/JW			

CONFIRMATION NO. 9051

CORRECTED FILING RECEIPT

OC000000020211291

41161
DUGAN & DUGAN, PC
55 SOUTH BROADWAY
TARRYTOWN, NY 10591

Date Mailed: 08/28/2006

Receipt is acknowledged of this provisional Patent Application. It will not be examined for patentability and will become abandoned not later than twelve months after its filing date. Be sure to provide the U.S. APPLICATION NUMBER, FILING DATE, NAME OF APPLICANT, and TITLE OF INVENTION when inquiring about this application. Fees transmitted by check or draft are subject to collection. Please verify the accuracy of the data presented on this receipt. **If an error is noted on this Filing Receipt, please mail to the Commissioner for Patents P.O. Box 1450 Alexandria Va 22313-1450. Please provide a copy of this Filing Receipt with the changes noted thereon. If you received a "Notice to File Missing Parts" for this application, please submit any corrections to this Filing Receipt with your reply to the Notice. When the USPTO processes the reply to the Notice, the USPTO will generate another Filing Receipt incorporating the requested corrections (if appropriate).**

Applicant(s)

Eric A. Englhardt, Palo Alto, CA;
Sushant S. Koshti, Sunnyvale, CA;

Power of Attorney:

Brian Dugan--41720

If Required, Foreign Filing License Granted: 05/10/2006

The country code and number of your priority application, to be used for filing abroad under the Paris Convention, is US60/795,481

Projected Publication Date: None, application is not eligible for pre-grant publication

Non-Publication Request: Not applicable

Early-Publication Request: Not applicable

Title

Methods and apparatus for transporting substrate carriers

PROTECTING YOUR INVENTION OUTSIDE THE UNITED STATES

Since the rights granted by a U.S. patent extend only throughout the territory of the United States and have no effect in a foreign country, an inventor who wishes patent protection in another country must apply for a patent in a specific country or in regional patent offices. Applicants may wish to consider the filing of an international application under the Patent Cooperation Treaty (PCT). An international (PCT) application generally has the same effect as a regular national patent application in each PCT-member country. The PCT process **simplifies** the filing of patent applications on the same invention in member countries, but **does not result** in a grant of "an international patent" and does not eliminate the need of applicants to file additional documents and fees in countries where patent protection is desired.

Almost every country has its own patent law, and a person desiring a patent in a particular country must make an application for patent in that country in accordance with its particular laws. Since the laws of many countries differ in various respects from the patent law of the United States, applicants are advised to seek guidance from specific foreign countries to ensure that patent rights are not lost prematurely.

Applicants also are advised that in the case of inventions made in the United States, the Director of the USPTO must issue a license before applicants can apply for a patent in a foreign country. The filing of a U.S. patent application serves as a request for a foreign filing license. The application's filing receipt contains further information and guidance as to the status of applicant's license for foreign filing.

Applicants may wish to consult the USPTO booklet, "General Information Concerning Patents" (specifically, the section entitled "Treaties and Foreign Patents") for more information on timeframes and deadlines for filing foreign patent applications. The guide is available either by contacting the USPTO Contact Center at 800-786-9199, or it can be viewed on the USPTO website at http://www.uspto.gov/web/offices/pac/doc/general/index.html.

For information on preventing theft of your intellectual property (patents, trademarks and copyrights), you may wish to consult the U.S. Government website, http://www.stopfakes.gov. Part of a Department of Commerce initiative, this website includes self-help "toolkits" giving innovators guidance on how to protect intellectual property in specific countries such as China, Korea and Mexico. For questions regarding patent enforcement issues, applicants may call the U.S. Government hotline at 1-866-999-HALT (1-866-999-4158).

LICENSE FOR FOREIGN FILING UNDER
Title 35, United States Code, Section 184
Title 37, Code of Federal Regulations, 5.11 & 5.15

GRANTED

The applicant has been granted a license under 35 U.S.C. 184, if the phrase "IF REQUIRED, FOREIGN FILING LICENSE GRANTED" followed by a date appears on this form. Such licenses are issued in all applications where the conditions for issuance of a license have been met, regardless of whether or not a license may be required as set forth in 37 CFR 5.15. The scope and limitations of this license are set forth in 37 CFR 5.15(a) unless an earlier license has been issued under 37 CFR 5.15(b). The license is subject to revocation upon written notification. The date indicated is the effective date of the license, unless an earlier license of similar scope has been granted under 37 CFR 5.13 or 5.14.

This license is to be retained by the licensee and may be used at any time on or after the effective date thereof unless it is revoked. This license is automatically transferred to any related applications(s) filed under 37 CFR 1.53(d). This license is not retroactive.

The grant of a license does not in any way lessen the responsibility of a licensee for the security of the subject matter as imposed by any Government contract or the provisions of existing laws relating to espionage and the national security or the export of technical data. Licensees should apprise themselves of current regulations especially with respect to certain countries, of other agencies, particularly the Office of Defense Trade Controls, Department of State (with respect to Arms, Munitions and Implements of War (22 CFR 121-128)); the Bureau of Industry and Security, Department of Commerce (15 CFR parts 730-774); the Office of Foreign Assets Control, Department of Treasury (31 CFR Parts 500+) and the Department of Energy.

NOT GRANTED

No license under 35 U.S.C. 184 has been granted at this time, if the phrase "IF REQUIRED, FOREIGN FILING LICENSE GRANTED" DOES NOT appear on this form. Applicant may still petition for a license under 37 CFR 5.12, if a license is desired before the expiration of 6 months from the filing date of the application. If 6 months has lapsed from the filing date of this application and the licensee has not received any indication of a secrecy order under 35 U.S.C. 181, the licensee may foreign file the application pursuant to 37 CFR 5.15(b).

UNITED STATES PATENT AND TRADEMARK OFFICE

Commissioner for Patents
United States Patent and Trademark Office
P.O. Box 1450
Alexandria, VA 22313-1450
www.uspto.gov

JJGJr: 08-06

Paper No: __

DUGAN & DUGAN, PC
55 SOUTH BROADWAY
TARRYTOWN NY 10591

COPY MAILED
SEP 1 1 2006
OFFICE OF PETITIONS

In re Application of	:	
Englehardt, et al.	:	
Application No. 60/795,481	:	DECISION
Filed: 26 April, 2006	:	
Attorney Docket No.:11151/L/SYNX/SYNX/JW	:	

This is a decision on the petition under 37 C.F.R. §1.10, filed on 16 June, 2006, seeking for the above-identified application a filing date of 26 April, 2006, rather than the presently accorded filing date of 27 April, 2006.

The petition is **GRANTED**.

BACKGROUND AND ANALYSIS

The instant application was received by the Office and accorded a filing date of 27 April, 2006.

The record reflects that:

- the instant application, averred to have been transmitted in the package bearing US Postal Service (USPS) Express Mail Label No. EV854243974US, was received by the Office and given a filing date of 27 April, 2006;

- with the instant petition, filed on 16 June, 2006, Petitioner provided, *inter alia*, (a) a copy of the USPS Express Mail label bearing USPS Express Mail Label No. EV854243974US

with the hand-written "date in" of "4 26" and a date stamp of "APR 26 2006";

- Petitioner apparently did not obtain and submit a copy of the USPS Track & Confirm statement bearing USPS Express Mail Label No. EV854243974US–a prudent practice to be undertaken within days after Petitioner expects delivery and which Petitioner would find beneficial for record keeping in all Express Mail shipments to the Office–however, the Office sought and obtained this material and placed it of record–and an indication of "ACCEPTANCE TARRYTOWN, NY 10591 04/26/06 6:51 pm."

Out of an abundance of caution, Petitioners always are reminded that those registered to practice *and* all others who make representations before the Office are reminded to inquire into the underlying facts of representations made to the Office and support averments with the appropriate documentation–since all owe to the Office the continuing duty to disclose.[1]

---

[1] See supplement of 17 June, 1999. The Patent and Trademark Office is relying on petitioner's duty of candor and good faith and accepting a statement made by Petitioner. See Changes to Patent Practice and Procedure, 62 Fed. Reg. at 53160 and 53178, 1203 Off. Gaz. Pat. Office at 88 and 103 (responses to comments 64 and 109)(applicant obligated under 37 C.F.R. §10.18 to inquire into the underlying facts and circumstances when providing statements to the Patent and Trademark Office).

Specifically, the regulations at 37 C.F.R. §10.18 provide:

§ 10.18 Signature and certificate for correspondence filed in the Patent and Trademark Office.
(a) For all documents filed in the Office in patent, trademark, and other non-patent matters, except for correspondence that is required to be signed by the applicant or party, each piece of correspondence filed by a practitioner in the Patent and Trademark Office must bear a signature by such practitioner complying with the provisions of §1.4(d), §1.4(e), or § 2.193(c)(1) of this chapter.
(b) By presenting to the Office (whether by signing, filing, submitting, or later advocating) any paper, the party presenting such paper, whether a practitioner or non-practitioner, is certifying that—
(1) All statements made therein of the party's own knowledge are true, all statements made therein on information and belief are believed to be true, and all statements made therein are made with the knowledge that whoever, in any matter within the jurisdiction of the Patent and Trademark Office, knowingly and willfully falsifies, conceals, or covers up by any trick, scheme, or device a material fact, or makes any false, fictitious or fraudulent statements or representations, or makes or uses any false writing or document knowing the same to contain any false, fictitious or fraudulent statement or entry, shall be subject to the penalties set forth under 18 U.S.C. 1001, and that violations of this paragraph may jeopardize the validity of the application or document, or the validity or enforceability of any patent, trademark registration, or certificate resulting therefrom; and
(2) To the best of the party's knowledge, information and belief, formed after an inquiry reasonable under the circumstances, that —
(i) The paper is not being presented for any improper purpose, such as to harass someone or to cause unnecessary delay or needless increase in the cost of prosecution before the Office;
(ii) The claims and other legal contentions therein are warranted by existing law or by a nonfrivolous argument for the extension, modification, or reversal of existing law or the establishment of new law;
(iii) The allegations and other factual contentions have evidentiary support or, if specifically so identified, are likely to have evidentiary support after a reasonable opportunity for further investigation or discovery; and
(iv) The denials of factual contentions are warranted on the evidence, or if specifically so identified, are reasonably based on a lack of information or belief.
(c) Violations of paragraph (b)(1) of this section by a practitioner or non-practitioner may jeopardize the validity of the application or document, or the validity or enforceability of any patent, trademark registration, or certificate resulting therefrom. Violations of any of paragraphs (b)(2)(i) through (iv) of this section are, after notice and reasonable opportunity to respond, subject to such sanctions as deemed appropriate by the Commissioner, or the Commissioner's designee, which may include, but are not limited to, any combination of —
(1) Holding certain facts to have been established;
(2) Returning papers;
(3) Precluding a party from filing a paper, or presenting or contesting an issue;
(4) Imposing a monetary sanction;
(5) Requiring a terminal disclaimer for the period of the delay; or
(6) Terminating the proceedings in the Patent and Trademark Office.
(d) Any practitioner violating the provisions of this section may also be subject to disciplinary action. See § 10.23(c)(15).
[Added 50 FR 5175, Feb. 6, 1985, effective Mar. 8, 1985; para. (a) revised, 58 FR 54494, Oct. 22, 1993, effective Nov. 22, 1993; paras. (a) &

The controlling regulations are set forth at under 37 C.F.R. §1.10.[2] A baseline requirement of

---

(b) revised, paras. (c) & (d) added, 62 FR 53131, Oct. 10, 1997, effective Dec. 1, 1997; para. (a) revised, 69 FR 56481, Sept. 21, 2004, effective Oct. 21, 2004]

[2] The regulations at 37 C.F.R. §1.10 provide:

§ 1.10 Filing of papers and fees by "Express Mail."

(a) Any correspondence received by the Patent and Trademark Office (Office) that was delivered by the "Express Mail Post Office to Addressee" service of the United States Postal Service (USPS) will be considered filed in the Office on the date of deposit with the USPS. The date of deposit with the USPS is shown by the "date-in" on the "Express Mail" mailing label or other official USPS notation. If the USPS deposit date cannot be determined, the correspondence will be accorded the Office receipt date as the filing date. See § 1.6(a).

(b) Correspondence should be deposited directly with an employee of the USPS to ensure that the person depositing the correspondence receives a legible copy of the "Express Mail" mailing label with the "date-in" clearly marked. Persons dealing indirectly with the employees of the USPS (such as by deposit in an "Express Mail" drop box) do so at the risk of not receiving a copy of the "Express Mail" mailing label with the desired "date-in" clearly marked. The paper(s) or fee(s) that constitute the correspondence should also include the "Express Mail" mailing label number thereon. See paragraphs (c), (d) and (e) of this section.

(c) Any person filing correspondence under this section that was received by the Office and delivered by the "Express Mail Post Office to Addressee" service of the USPS, who can show that there is a discrepancy between the filing date accorded by the Office to the correspondence and the date of deposit as shown by the "date-in" on the "Express Mail" mailing label or other official USPS notation, may petition the Commissioner to accord the correspondence a filing date as of the "date-in" on the "Express Mail" mailing label or other official USPS notation, provided that:

(1) The petition is filed promptly after the person becomes aware that the Office has accorded, or will accord, a filing date other than the USPS deposit date;

(2) The number of the "Express Mail" mailing label was placed on the paper(s) or fee(s) that constitute the correspondence prior to the original mailing by "Express Mail;" and

(3) The petition includes a true copy of the "Express Mail" mailing label showing the "date-in," and of any other official notation by the USPS relied upon to show the date of deposit.

(d) Any person filing correspondence under this section that was received by the Office and delivered by the "Express Mail Post Office to Addressee" service of the USPS, who can show that the "date-in" on the "Express Mail" mailing label or other official notation entered by the USPS was incorrectly entered or omitted by the USPS, may petition the Commissioner to accord the correspondence a filing date as of the date the correspondence is shown to have been deposited with the USPS, provided that:

(1) The petition is filed promptly after the person becomes aware that the Office has accorded, or will accord, a filing date based upon an incorrect entry by the USPS;

(2) The number of the "Express Mail" mailing label was placed on the paper(s) or fee(s) that constitute the correspondence prior to the original mailing by "Express Mail"; and

(3) The petition includes a showing which establishes, to the satisfaction of the Commissioner, that the requested filing date was the date the correspondence was deposited in the "Express Mail Post Office toAddressee" service prior to the last scheduled pickup for that day. Any showing pursuant to this paragraph must be corroborated by evidence from the USPS or that came into being after deposit and within one business day of the deposit of the correspondence in the "Express Mail Post Office to Addressee" service of the USPS.

(e) Any person mailing correspondence addressed as set out in § 1.1(a) to the Office with sufficient postage utilizing the "Express Mail Post Office to Addressee" service of the USPS but not received by the Office, may petition the Commissioner to consider such correspondence filed in the Office on the USPS deposit date, provided that:

(1) The petition is filed promptly after the person becomes aware that the Office has no evidence of receipt of the correspondence;

(2) The number of the "Express Mail" mailing label was placed on the paper(s) or fee(s) that constitute the correspondence prior to the original mailing by "Express Mail";

(3) The petition includes a copy of the originally deposited paper(s) or fee(s) that constitute the correspondence showing the number of the "Express Mail" mailing label thereon, a copy of any returned postcard receipt, a copy of the "Express Mail" mailing label showing the "date-in," a copy of any other official notation by the USPS relied upon to show the date of deposit, and, if the requested filing date is a date other than the "date-in" on the "Express Mail" mailing label or other official notation entered by the USPS, a showing pursuant to paragraph (d)(3) of this section that the requested filing date was the date the correspondence was deposited in the "Express Mail Post Office to Addressee" service prior to the last scheduled pickup for that day; and

(4) The petition includes a statement which establishes, to the satisfaction of the Commissioner, the original deposit of the correspondence and that the copies of the correspondence, the copy of the "Express Mail" mailing label, the copy of any returned postcard receipt, and any official notation entered by the USPS are true copies of the originally mailed correspondence, original "Express Mail" mailing label, returned postcard receipt, and official notation entered by the USPS.

(f) The Office may require additional evidence to determine if the correspondence was deposited as "Express Mail" with the USPS on the date in question.

[48 Fed. Reg. 2708, Jan. 20, 1983, added effective Feb. 27, 1983; 48 Fed. Reg. 4285, Jan. 31, 1983, paras. (a) & (c), 49 Fed. Reg. 552, Jan. 4, 1984, effective Apr. 1, 1984; paras. (a)-(c) revised and paras. (d) - (f) added, 61 Fed. Reg. 56439, Nov. 1, 1996, effective Dec. 2, 1996; paras. (d) & (e) revised, 62 Fed. Reg. 53131, Oct. 10, 1997, effective Dec. 1, 1997]

any petition under the Rule is that the petition "... is filed promptly after [Petitioner] becomes aware ..." that the filing date may not be correct.

The petition is **granted**, and the petition fee is waived.

The instant file is released to OIPE to correct the filing date so as to accord to the instant application a filing date of 26 April, 2006, and to mail to Petitioner a corrected filing receipt reflecting a filing date of 26 April, 2006.

While telephone inquiries regarding this decision may be directed to the undersigned at (571) 272-3214, it is noted that all practice before the Office is in writing (see: 37 C.F.R. §1.2[3]) and the proper authority for action on any matter in this regard are the statutes (35 U.S.C.), regulations (37 C.F.R.) and the commentary on policy (MPEP). Therefore, no telephone discussion may be controlling or considered authority for Petitioner's action(s).

John J. Gillon, Jr.
Senior Attorney
Office of Petitions

---

[3] The regulations at 37 C.F.R. §1.2 provide:
§1.2 Business to be transacted in writing.
All business with the Patent and Trademark Office should be transacted in writing.The personal attendance of applicants or their attorneys or agents at the Patent and Trademark Office is unnecessary. The action of the Patent and Trademark Office will be based exclusively on the written record in the Office. No attention will be paid to any alleged oral promise, stipulation,or understanding in relation to which there is disagreement or doubt.

UNITED STATES PATENT AND TRADEMARK OFFICE

COMMISSIONER FOR PATENTS
UNITED STATES PATENT AND TRADEMARK OFFICE
P.O. BOX 1450
ALEXANDRIA, VA 22313-1450
WWW.USPTO.GOV

Paper No. None

WOLF GREENFIELD & SACKS, PC
FEDERAL RESERVE PLAZA
600 ATLANTIC AVENUE
BOSTON MA 02210-2206

COPY MAILED
DEC 11 2006
OFFICE OF PETITIONS

In re Application of :
Thomas Quinlan et al. :
Application No. 60/795,763 :
Filed: April 28, 2006 : DECISION ON PETITION UNDER
Attorney Docket No. : 37 C.F.R. §1.182
P0663.70028US00 :
Title: INTELLIGENT DEVICE AND :
DATA NETWORK :

This is a decision on the petition under 37 C.F.R. §1.182, filed on August 14, 2006, requesting that the above-identified application be accorded a filing date of April 28, 2006.

On April 28, 2006, the above-identified application was deposited. On June 13, 2006, the Office of Initial Patent Examination (OIPE) mailed a "Notice of Incomplete Provisional Application - Filing Date Not Granted (notice)", advising applicant that the application was deposited without drawings, and that a filing date would be accorded upon the submission of drawings.

The electronic file has been reviewed, and it is noted that "Appendix B," submitted on filing, contains drawings. Petitioner has set forth "although certain drawings referenced in the specification were inadvertently omitted from the application papers, the drawings that were included in the application were more than sufficient to meet the requirements of 37 C.F.R. §1.53(c) at least with respect to certain subject matter."

The petition is **GRANTED**.

The petition fee of $400 will be refunded to Petitioner's Deposit Account, as authorized in the petition.

The application file is being returned to the Office of Initial Patent Examination for further processing with a filing date of April 28, 2006, and for **mailing of an updated filing receipt,** using only the original application papers filed on that date.

Telephone inquiries regarding *this decision* should be directed to the undersigned at (571) 272-3225[1]. All other inquiries concerning examination procedures or status of the application should be directed to the Technology Center.

Paul Shanoski
Senior Attorney
Office of Petitions
United States Patent and Trademark Office

1 Petitioner will note that all practice before the Office should be in writing, and the action of the Office will be based exclusively on the written record in the Office. See 37 C.F.R. §1.2. As such, Petitioner is reminded that no telephone discussion may be controlling or considered authority for Petitioner's further action(s).

UNITED STATES PATENT AND TRADEMARK OFFICE

Commissioner for Patents
United States Patent and Trademark Office
P.O. Box 1450
Alexandria, VA 22313-1450
www.uspto.gov

FISH & RICHARDSON P.C.
PO BOX 1022
MINNEAPOLIS MN 55440-1022

COPY MAILED

JUL 16 2007

OFFICE OF PETITIONS

In re Application of	:	
Oh et al.	:	DECISION ON PETITION TO
Application No. 60/797782	:	WITHDRAW HOLDING OF
Filed: 05/03/2006	:	ABANDONMENT
Attorney Docket No. 19819-	:	
013P01 / 06FDTV086U	:	

This is a decision on the petition filed on 23 March, 2007, to withdraw the holding of abandonment in the above-identified application.

The petition is **GRANTED**.

The application was held abandoned for failure to timely respond to the Notice to File Missing Parts of Provisional Application mailed on 15 May, 2006, which set a two (2)-month shortened period for reply. No reply having been received, Notice of Abandonment was mailed on 23 January, 2007.

Petitioners aver that a reply was timely filed by facsimile on 1 June, 2006. In support, petitioners submitted with the petition a copy of the reply allegedly filed. The transmittal letter accompanying the reply bears a certificate of transmission by facsimile dated 1 June, 2006, signed by Kathy Jordan. The petition is also accompanied by a declaration by Ms. Jordan attesting to the fact that she personally faxed the response to the USPTO at 571-273-8300 on 1 June, 2006.

Any petition to withdraw the holding of abandonment based on a Certificate of Transmission by facsimile must include the following requirements:

(1) A copy of the original response bearing a signed Certificate of Transmission which includes the date of signing; and

(2) A statement under 37 CFR 1.8(b)(3) attesting to the personal knowledge of transmitting the ***original*** response on the date indicated on the Certificate of Transmission (*see* 37 CFR 1.8 and MPEP 512).

As petitioners have provided convincing evidence that an amendment was transmitted to the USPTO on 1 June, 2006, the showing of record is that a response was timely filed, and there is no abandonment in fact. Any inconvenience caused to applicant is regretted.

The holding of abandonment is withdrawn, and the notice of abandonment is vacated.

The application is being referred to the Office of Initial Patent Examination for further processing.

Telephone inquiries concerning this matter may be directed to the undersigned at (571)272-3231.

DIWood

Douglas I. Wood
Senior Petitions Attorney
Office of Petitions

UNITED STATES PATENT AND TRADEMARK OFFICE

Commissioner for Patents
United States Patent and Trademark Office
P.O. Box 1450
Alexandria, VA22313-1450
www.uspto.gov

JOHN ARMIN HEROLD
408 PACIFIC AVE.
PASO ROBLES CA 93446

COPY MAILED

JUN 13 2007

OFFICE OF PETITIONS

In re Application of
John Armin Herold et al.
Application No. 60/797,804
Filed: May 5, 2006
Title of Invention: **NETWORK SECURITY SWITCH**

ON PETITION

This is a decision on the petition to withdraw the holding of abandoned, filed March 22, 2007, which is treated under 37 CFR 1.181, in accordance with the reasoning of the decision in Delgar Inc. v. Schuyler, 172 USPQ 513.

The petition is **DISMISSED**.

Any request for reconsideration of this decision must be submitted within **TWO (2) MONTHS** from the mail date of this decision. Extensions of time under 37 CFR 1.136(a) are permitted. The reconsideration request should include a cover letter entitled "Renewed Petition under 37 CFR 1.181," or, as explained in more detail below, "...under 37 CFR 1.137(a)" or (b). This is not a final agency decision.

This application became abandoned on July 25, 2006 after the applicant failed to file a timely response to the Notice to File Missing Parts mailed May 24, 2006. Accordingly, a Notice of Abandonment was mailed January 29, 2007.

Petitioner, argues that the Notice mailed July 25, 2006 was not received and that a check of the file for the instant application and other files has been checked to ensure that the Notice wasn't misfiled but that after a check of the files, it has been determined that the Notice was not received.

A review of the file reveals that the Notice was mailed to the address of record on May 24, 2006. There doesn't appear to be any irregularity in the mailing of the Office action, and in the absence of any irregularity in the mailing, there is a strong presumption that the Office action was properly mailed to the address of record. This presumption may be overcome by a showing that the Notice was not in fact received. The showing required to establish the failure to receive an Office action must include a statement from the inventor that the Office communication was not received and attesting to the fact that a search of the docket records indicates that the Office communication was not received. A copy of the docket record where the non-received Office communication

would have been entered had it been received and docketed must be attached to and referenced in petitioner's statement.[1]

It is understood that petitioner is prosecuting this application as a *pro se* inventor and that *pro se* applicants may not have as elaborate a docketing system as a law firm. This does not warrant a total waiver of the requirement of a showing that includes copies of docket records or an adequate proxy for such copies. A *pro se* applicant should have some written records evidencing receipt of communications from and mailing of communications to the Office available to provide proof of nonreceipt. It is suggested that pro se applicants maintain a log of communications from and to the Office, with dates of receipt, due dates and mailing dates of responses and other papers filed noted. Furthermore, applicants may maintain entries on the file jackets noting these important dates. Absent such evidence, applicants may not be able to overcome the presumption that the correspondence was properly mailed and received at the correspondence address of record and thereafter, misplaced by applicants.

ALTERNATIVE VENUES

Petitioner may wish to consider filing a renewed petition under 37 CFR 1.137(a)[2] or 37 CFR 1.137(b),[3] which now provides that where the delay in reply was unintentional, a

---

[1]M.P.E.P. § 711.03(c); See Notice entitled "Withdrawing the Holding of Abandonment When Office Actions Are Not Received," 1156 O.G. 53 (November 16, 1993).

[2]A grantable petition under 37 CFR 1.137(a) must be accompanied by:

(1) the required reply, unless previously filed; In a nonprovisional application abandoned for failure to prosecute, the required reply may be met by the filing of a continuing application. In a nonprovisional utility or plant application filed on or after June 8, 1995, and abandoned for failure to prosecute, the required reply may also be met by the filing of a request for continued examination in compliance with § 1.114. In an application or patent, abandoned or lapsed for failure to pay the issue fee or any portion thereof, the required reply must be the payment of the issue fee or any outstanding balance thereof.

(2) the petition fee as set forth in 37 CFR 1.17(l);

(3) a showing to the satisfaction of the Commissioner that the entire delay in filing the required reply from the due date for the reply until the filing of a grantable petition pursuant to 37 CFR 1.137(a) was unavoidable; and

(4) any terminal disclaimer (and fee as set forth in 37 CFR 1.20(d)) required pursuant to 37 CFR 1.137(c)).

[3]Effective December 1, 1997, the provisions of 37 CFR 1.137(b) now provide that where the delay in reply was unintentional, a petition may be filed to revive an abandoned application or a lapsed patent pursuant to 37 CFR 1.137(b). A grantable petition filed under the provisions of 37 CFR 1.137(b) must be accompanied by:

(1) the required reply, unless previously filed. In a nonprovisional application abandoned for failure to prosecute, the required reply may be met by the filing of a continuing application. In a nonprovisional application filed on or after June 8, 1995, and abandoned for failure to prosecute, the required reply may also be met by the filing of a request for continued examination in compliance with § 1.114. In an application or patent, abandoned or lapsed for failure to pay the issue fee or any portion thereof, the required reply must be the payment of the issue fee or any outstanding balance thereof. In an application abandoned for failure to pay the publication fee, the required

petition may be filed to revive an abandoned application or a lapsed patent pursuant to 37 CFR 1.137(b).

The filing of a petition under the unintentional standard cannot be intentionally delayed and therefore should be filed promptly. A person seeking revival due to unintentional delay cannot make a statement that the delay was unintentional unless the entire delay, including the delay from the date it was discovered that the application was abandoned until the filing of the petition to revive under 37 CFR 1.137(b), was unintentional. A statement that the delay was unintentional is not appropriate if petitioner intentionally delayed the filing of a petition for revival under 37 CFR 1.137(b).

Please note that at this writing (subject to change) the petition fee for a small entity under 37 CFR 1.137(b) is $750.00 and $1,500.00 for a large entity.

Further correspondence with respect to this matter should be addressed as follows:

By mail: Mail Stop Petition
Commissioner for Patents
P.O. Box 1450
Alexandria, VA 22313-1450

By FAX: (571) 273-8300

Telephone inquiries concerning this matter may be directed to the undersigned Petitions Attorney at (571) 272-3212.

Patricia Faison-Ball

Patricia Faison-Ball
Senior Petitions Attorney
Office of Petitions

---

reply must include payment of the publication fee.

(2) the petition fee as set forth in 37 CFR 1.17(m);

(3) a statement that the entire delay in filing the required reply from the due date for the reply until the filing of a grantable petition pursuant to 37 CFR 1.137(b) was unintentional. The Commissioner may required additional information where there is a question whether the delay was unintentional; and

(4) any terminal disclaimer (and fee as set forth in 37 CFR 1.20(d)) required pursuant to 37 CFR 1.137(c)).

UNITED STATES PATENT AND TRADEMARK OFFICE

Commissioner for Patents
United States Patent and Trademark Office
P.O. Box 1450
Alexandria, VA 22313-1450
www.uspto.gov

EDELL, SHAPIRO & FINNAN, LLC
1901 RESEARCH BOULEVARD
SUITE 400
ROCKVILLE MD 20850

COPY MAILED

JUL 30 2009

OFFICE OF PETITIONS

In re Application of	:	
Stacy O'Connor et al.	:	
Application No. 60/798,036	:	ON PETITION
Filed: May 4, 2006	:	
Attorney Docket No. MAT.3Z061P	:	

This is a decision on the petition under the unintentional provisions of 37 CFR 1.137(b), filed April 22, 2009, to revive the above-identified application.

The petition is **DISMISSED AS MOOT**.

The application was filed May 4, 2006. As noted in 35 USC 111(b)(5), "*upon timely request and as prescribed by the Director, a provisional application may be treated as an application filed under subsection (a). Subject to section 119(e)(3) of this title, if no such request is made, the provisional application shall be regarded as abandoned 12 months after the filing date of such application and shall not be subject to revival after such 12-month period.*" As no request for conversion of the instant application to a non-provisional application was timely made, the instant application became abandoned at midnight on May 4, 2007, through operation of law.

Further correspondence with respect to this matter should be addressed as follows:

By Mail: Mail Stop PETITION
Commissioner for Patents
P. O. Box 1450
Alexandria, VA 22313-1450

By hand: U. S. Patent and Trademark Office
Customer Service Window, Mail Stop Petitions
Randolph Building
401 Dulany Street
Alexandria, VA 22314

The centralized facsimile number is **(571) 273-8300.**

Telephone inquiries concerning this decision should be directed to JoAnne Burke at (571) 272-4584.

Ramesh Krishnamurthy

Ramesh Krishnamurthy
Petitions Examiner
Office of Petitions

UNITED STATES PATENT AND TRADEMARK OFFICE

UNITED STATES DEPARTMENT OF COMMERCE
United States Patent and Trademark Office
Address: COMMISSIONER FOR PATENTS
P.O. Box 1450
Alexandria, Virginia 22313-1450
www.uspto.gov

APPL NO.	FILING OR 371 (c) DATE	ART UNIT	FIL FEE REC'D	ATTY.DOCKET NO	DRAWINGS	TOT CLMS	IND CLMS
60/798,070	05/05/2006		200	05003JP (3600-533)	2		

CONFIRMATION NO. 2818

CORRECTED FILING RECEIPT

OC000000019719458

33432
KILYK & BOWERSOX, P.L.L.C.
400 HOLIDAY COURT
SUITE 102
WARRENTON, VA 20186

Date Mailed: 07/24/2006

Receipt is acknowledged of this provisional Patent Application. It will not be examined for patentability and will become abandoned not later than twelve months after its filing date. Be sure to provide the U.S. APPLICATION NUMBER, FILING DATE, NAME OF APPLICANT, and TITLE OF INVENTION when inquiring about this application. Fees transmitted by check or draft are subject to collection. Please verify the accuracy of the data presented on this receipt. **If an error is noted on this Filing Receipt, please mail to the Commissioner for Patents P.O. Box 1450 Alexandria Va 22313-1450. Please provide a copy of this Filing Receipt with the changes noted thereon. If you received a "Notice to File Missing Parts" for this application, please submit any corrections to this Filing Receipt with your reply to the Notice. When the USPTO processes the reply to the Notice, the USPTO will generate another Filing Receipt incorporating the requested corrections (if appropriate).**

Applicant(s)

Yujiro Mizusaki, Fukushima-ken, JAPAN;
Hitoshi Iijima, Tokyo, JAPAN;
Yoshikazu Noguchi, Fukushima-ken, JAPAN;

Power of Attorney:

Luke Kilyk--33251

If Required, Foreign Filing License Granted: 06/27/2006

The country code and number of your priority application, to be used for filing abroad under the Paris Convention, is US60/798,070

Projected Publication Date: None, application is not eligible for pre-grant publication

Non-Publication Request: Not applicable

Early-Publication Request: Not applicable

Title

Tantalum powder and methods of manufacturing same

PROTECTING YOUR INVENTION OUTSIDE THE UNITED STATES

Since the rights granted by a U.S. patent extend only throughout the territory of the United States and have no effect in a foreign country, an inventor who wishes patent protection in another country must apply for a patent in a specific country or in regional patent offices. Applicants may wish to consider the filing of an international application under the Patent Cooperation Treaty (PCT). An international (PCT) application generally has the same effect as a regular national patent application in each PCT-member country. The PCT process **simplifies** the filing of patent applications on the same invention in member countries, but **does not result** in a grant of "an international patent" and does not eliminate the need of applicants to file additional documents and fees in countries where patent protection is desired.

Almost every country has its own patent law, and a person desiring a patent in a particular country must make an application for patent in that country in accordance with its particular laws. Since the laws of many countries differ in various respects from the patent law of the United States, applicants are advised to seek guidance from specific foreign countries to ensure that patent rights are not lost prematurely.

Applicants also are advised that in the case of inventions made in the United States, the Director of the USPTO must issue a license before applicants can apply for a patent in a foreign country. The filing of a U.S. patent application serves as a request for a foreign filing license. The application's filing receipt contains further information and guidance as to the status of applicant's license for foreign filing.

Applicants may wish to consult the USPTO booklet, "General Information Concerning Patents" (specifically, the section entitled "Treaties and Foreign Patents") for more information on timeframes and deadlines for filing foreign patent applications. The guide is available either by contacting the USPTO Contact Center at 800-786-9199, or it can be viewed on the USPTO website at http://www.uspto.gov/web/offices/pac/doc/general/index.html.

For information on preventing theft of your intellectual property (patents, trademarks and copyrights), you may wish to consult the U.S. Government website, http://www.stopfakes.gov. Part of a Department of Commerce initiative, this website includes self-help "toolkits" giving innovators guidance on how to protect intellectual property in specific countries such as China, Korea and Mexico. For questions regarding patent enforcement issues, applicants may call the U.S. Government hotline at 1-866-999-HALT (1-866-999-4158).

LICENSE FOR FOREIGN FILING UNDER
Title 35, United States Code, Section 184
Title 37, Code of Federal Regulations, 5.11 & 5.15

GRANTED

The applicant has been granted a license under 35 U.S.C. 184, if the phrase "IF REQUIRED, FOREIGN FILING LICENSE GRANTED" followed by a date appears on this form. Such licenses are issued in all applications where the conditions for issuance of a license have been met, regardless of whether or not a license may be required as set forth in 37 CFR 5.15. The scope and limitations of this license are set forth in 37 CFR 5.15(a) unless an earlier license has been issued under 37 CFR 5.15(b). The license is subject to revocation upon written notification. The date indicated is the effective date of the license, unless an earlier license of similar scope has been granted under 37 CFR 5.13 or 5.14.

This license is to be retained by the licensee and may be used at any time on or after the effective date thereof unless it is revoked. This license is automatically transferred to any related applications(s) filed under 37 CFR 1.53(d). This license is not retroactive.

The grant of a license does not in any way lessen the responsibility of a licensee for the security of the subject matter as imposed by any Government contract or the provisions of existing laws relating to espionage and the national security or the export of technical data. Licensees should apprise themselves of current regulations especially with respect to certain countries, of other agencies, particularly the Office of Defense Trade Controls, Department of State (with respect to Arms, Munitions and Implements of War (22 CFR 121-128)); the Bureau of

Industry and Security, Department of Commerce (15 CFR parts 730-774); the Office of Foreign Assets Control, Department of Treasury (31 CFR Parts 500+) and the Department of Energy.

NOT GRANTED

No license under 35 U.S.C. 184 has been granted at this time, if the phrase "IF REQUIRED, FOREIGN FILING LICENSE GRANTED" DOES NOT appear on this form. Applicant may still petition for a license under 37 CFR 5.12, if a license is desired before the expiration of 6 months from the filing date of the application. If 6 months has lapsed from the filing date of this application and the licensee has not received any indication of a secrecy order under 35 U.S.C. 181, the licensee may foreign file the application pursuant to 37 CFR 5.15(b).

UNITED STATES PATENT AND TRADEMARK OFFICE

Commissioner for Patents
United States Patent and Trademark Office
P.O. Box 1450
Alexandria, VA 22313-1450
www.uspto.gov

WILLIAM S. PERELL
301 JUNIPERO BOULEVARD, SUITE 220
SAN FRANCISCO CA 94127

COPY MAILED

JUL 23 2007

OFFICE OF PETITIONS

In re Application of	:	
William S. Perell	:	
Application No. 60/798,948	:	DECISION GRANTING PETITION
Filed: May 10, 2006	:	UNDER 37 CFR 1.137(b)
Attorney Docket No. Per 29 Zip.Bub	:	

This is a decision on the petition under 37 CFR 1.137(b), filed March 2, 2007, to revive the above-identified application.

The petition is **GRANTED**.

The petition satisfies the conditions for revival pursuant to the provisions of 37 CFR 1.137(b) in that (1) the reply; (2) the petition fee; and (3) the required statement of unintentional delay have been received. Accordingly, the reply to the Notice To File Missing Parts Of Provisional Application of May 31, 2006, is accepted as having been unintentionally delayed.

Telephone inquiries concerning this decision should be directed to the undersigned at (571) 272-3208.

This matter is being referred to the Office of Initial Patent Examination.

Karen Creasy

Karen Creasy
Petitions Examiner
Office of Petitions

UNITED STATES PATENT AND TRADEMARK OFFICE

Commissioner for Patents
United States Patent and Trademark Office
P.O. Box 1450
Alexandria, VA 22313-1450
www.uspto.gov
DIW Apr-07

LATHROP & GAGE LC
4845 PEARL EAST CIRCLE
SUITE 300
BOULDER CO 80301

COPY MAILED

APR 1 2 2007

OFFICE OF PETITIONS

In re Application of	:	
Macon et al.	:	
Application No. 60/798986	:	DECISION ON PETITION
Filed: 9 May, 2006	:	
Atty Docket No. 450400	:	

This is a decision on the petition filed on 29 November, 2006, under 37 CFR 1.53(e) requesting that the above-identified provisional application be accorded a filing date of 9 May, 2006. This is also a decision on the petition under 37 CFR 1.137(b) filed on 29 March, 2006.

The petition under 37 CFR 1.53(e) is **granted.**

The petition under 37 CFR 1.137(b) is **dismissed as moot.**

The instant provisional application papers as filed consisted of 81 pages containing text and drawings on the same pages. On 1 September, 2006, however, the Office of Initial Patent Examination sent a Notice of Incomplete Provisional Application stating that the specificiation was missing and that the filing date would be the date of receipt of the missing specification.

In reply, the present petition was filed on 29 November, 2006,

Petitioners assert that the specification was present among the 81 pages of text and figures. Specifically, petitioners assert that the first 64 pages of drawings and text constituted the specification, while the remaining 17 pages contained the drawings. Petitioners concede, however, that the Provisional Application Cover Sheet inadvertently identified all 81 pages as drawings.

Pursuant to 35 USC 111(b)(1)(A);(B), in order to obtain a filing date, a provisional application must provide the specification required by 35 USC 112 ¶ 1, and a drawing as prescribed by 35 USC 113. 37 CFR 1.53(c)(1) also requires the inclusion of a cover sheet pursuant to 37 CFR 1.51(c)(1), a condition clearly met

herein on 6 April, 2005, as was the submission of the filing fee required by 35 USC 41. All conditions for obtaining a filing date in this provisional application were clearly met on 6 April, 2005.

Under the facts of this case, this provisional application is entitled, for a filing date, to the date of receipt of the 81 pages of drawings and text. There is no explicit requirement that precludes the obtaining of a filing date for a provisional application when the specification and drawings are, as here, not separated.

However, as petitioner indicated on the Provisional Application Cover Sheet that no pages of specification were present, the petition was necessitated by an error on the part of applicant, and the petition fee will not be refunded.

The Notice of 1 September, 2006, was mailed in error and is vacated.

As the Notice mailed on 1 September, 2006, stated that the application had not been accorded a filing date, the application did not become abandoned. Since the application did not become abandoned, a petition to revive the application under 37 CFR 1.137(b) is inappropriate and will be dismissed as moot. The petition fee will be refunded.

This provisional application is being forwarded to the Office of Initial Patent Examination (OIPE), Customer Corrections, for further processing with a filing date of 9 May, 2006.

Telephone inquiries should be directed to the undersigned at 571-272-3231. Inquiries related to OIPE processing should be directed to OIPE at 571-272-4000.

D Wood

Douglas I. Wood
Senior Petitions Attorney
Office of Petitions

UNITED STATES PATENT AND TRADEMARK OFFICE

Commissioner for Patents
United States Patent and Trademark Office
P.O. Box 1450
Alexandria, VA 22313-1450
www.uspto.gov

GREER, BURNS & CRAIN
300 S WACKER DR
25TH FLOOR
CHICAGO, IL 60606

COPY MAILED

SEP 25 2006

OFFICE OF PETITIONS

In re Application of	:	
Rood, et al.	:	
Application No.: 60/799,269	:	ON PETITION
Filed: May 10, 2006	:	
Attorney Docket No:0321.73283	:	

This is a decision on the petition under 37 CFR 1.28(c), filed June 26, 2006.

The petition is **GRANTED.**

The record reflects that the filing fee for the above-cited provisional application was paid at the small entity rate. The amount paid was $100.00. Petitioner later discovered that the inventive entity did not qualify as a small entity and filed the instant petition, accordingly.

The outstanding amount of $100.00 was received on June 26, 2006

Pursuant to 37 CFR 1.28(d), the payment of the deficient amount will be treated under 37 CFR 1.27(g)(2) as a notification of a loss of entitlement to small entity status.

The application file will be returned to the Files Repository.

Telephone inquiries regarding this decision should be directed to the undersigned at (571) 272-3222.

Kenya A. McLaughlin
Petitions Attorney
Office of Petitions

UNITED STATES PATENT AND TRADEMARK OFFICE

COMMISSIONER FOR PATENTS
UNITED STATES PATENT AND TRADEMARK OFFICE
P.O. BOX 1450
ALEXANDRIA, VA 22313-1450
www.uspto.gov

COPY MAILED

JUN 25 2007

OFFICE OF PETITIONS

SAM FRANKLIN THOMAS
201 NORTH PINE ST.
LAUDERDALE AL 35630

In re Application of :
Thomas : DECISION ON PETITION
Application No. 60/799,721 :
For: April 28, 2006 :
For: USEFUL CONCEPT IDEAS THE :
TOOTH BRUSH AFFECT, THE NUCLEAR :
BULLET/NUCLEAR MACHINE GUN, THE :
NUCLEAR ROCKET LAUNCHER LAZER :
GUIDED MISSILE :

This is a decision on the petition under 37 CFR 1.137(a), filed March 12, 2007, to revive the above-identified application.

The petition under 37 CFR 1.137(a) is **DISMISSED**.

Any request for reconsideration of this decision must be submitted within **TWO (2) MONTHS** from mail date of this decision. Extensions of time under 37 CFR 1.136(a) are permitted. The reconsideration request should include a cover letter entitled "Renewed Petition under 37 CFR 1.137(a)." This is not a final agency decision.

This application became abandoned August 17, 2006 for failure to timely submit a proper reply to the Notice mailed June 16, 2006. The Notice set a two month shortened period of time for review. Notice of Abandonment was mailed February 23, 2007.

A grantable petition under 37 CFR 1.137(a) must be accompanied by: (1) the required reply, unless previously filed; (2) the petition fee as set forth in 37 CFR 1.17(l); (3) a showing to the satisfaction of the Director that the entire delay in filing the required reply from the due date for the reply until the filing of a grantable petition pursuant to 37 CFR 1.137(a) was unavoidable; and (4) any terminal disclaimer (and fee as set forth in 37 CFR 1.20(d)) required pursuant to 37 CFR 1.137(c).

Submission of the required petition fee is a prerequisite prior to treatment on the merits for any petition submitted pursuant to 37 CFR 1.137(a). The instant petition lacks the required fee and as such has not been reviewed on the merits. The current

petition fee required under 37 CFR 1.137(a) is $500.00 for a large entity and $250.00 for a small entity.

Any renewed petition must be accompanied by the required fee.

The correspondence address indicated on the instant petition differs from the correspondence address currently in the record. A courtesy copy of this decision is being dually mailed. However, petitioner is advised that all future correspondence concerning this application shall be directed to the correspondence address of record until appropriate instruction is submitted to the contrary.

Enclosed please find forms that may be useful to petitioner.

Further correspondence with respect to this matter should be addressed as follows:

By mail: Mail Stop Petition
Commissioner for Patents
P.O. Box 1450
Alexandria, VA 22313-1450

By facsimile: (571) 273-8300

By hand: U.S. Patent and Trademark Office
Customer Window
Mail Stop Petition
Randolph Building
Dulany Street
Alexandria, VA 22314

Telephone inquiries concerning this matter may be directed to the undersigned at (571) 272-3205.

Alesia M. Brown
Petitions Attorney
Office of Petitions

Enclosures

CC: SAM FRANKLIN THOMAS
6230 ROBINHOOD LN. #39
HUNTSVILLE, AL 35806

PTO/SB/122 (01-06)
Approved for use through 12/31/2008. OMB 0651-0035
U.S. Patent and Trademark Office; U.S. DEPARTMENT OF COMMERCE
Under the Paperwork Reduction Act of 1995, no persons are required to respond to a collection of information unless it displays a valid OMB control number.

CHANGE OF CORRESPONDENCE ADDRESS
Application

Address to:
Commissioner for Patents
P.O. Box 1450
Alexandria, VA 22313-1450

Application Number	
Filing Date	
First Named Inventor	
Art Unit	
Examiner Name	
Attorney Docket Number	

Please change the Correspondence Address for the above-identified patent application to:

☐ The address associated with Customer Number: [ ]

OR

☐ Firm or Individual Name

Address

City	State	Zip

Country

Telephone	Email

This form cannot be used to change the data associated with a Customer Number. To change the data associated with an existing Customer Number use "Request for Customer Number Data Change" (PTO/SB/124).

I am the:

☐ Applicant/Inventor

☐ Assignee of record of the entire interest.
Statement under 37 CFR 3.73(b) is enclosed. (Form PTO/SB/96).

☐ Attorney or agent of record. Registration Number _____.

☐ Registered practitioner named in the application transmittal letter in an application without an executed oath or declaration. See 37 CFR 1.33(a)(1). Registration Number_____.

Signature

Typed or Printed Name

Date	Telephone

NOTE: Signatures of all the inventors or assignees of record of the entire interest or their representative(s) are required. Submit multiple forms if more than one signature is required, see below*.

☐ *Total of _____forms are submitted.

This collection of information is required by 37 CFR 1.33. The information is required to obtain or retain a benefit by the public which is to file (and by the USPTO to process) an application. Confidentiality is governed by 35 U.S.C. 122 and 37 CFR 1.11 and 1.14. This collection is estimated to take 3 minutes to complete, including gathering, preparing, and submitting the completed application form to the USPTO. Time will vary depending upon the individual case. Any comments on the amount of time you require to complete this form and/or suggestions for reducing this burden, should be sent to the Chief Information Officer, U.S. Patent and Trademark Office, U.S. Department of Commerce, P.O. Box 1450, Alexandria, VA 22313-1450. DO NOT SEND FEES OR COMPLETED FORMS TO THIS ADDRESS. **SEND TO: Commissioner for Patents, P.O. Box 1450, Alexandria, VA 22313-1450.**

If you need assistance in completing the form, call 1-800-PTO-9199 and select option 2.

Privacy Act Statement

The **Privacy Act of 1974 (P.L. 93-579)** requires that you be given certain information in connection with your submission of the attached form related to a patent application or patent. Accordingly, pursuant to the requirements of the Act, please be advised that: (1) the general authority for the collection of this information is 35 U.S.C. 2(b)(2); (2) furnishing of the information solicited is voluntary; and (3) the principal purpose for which the information is used by the U.S. Patent and Trademark Office is to process and/or examine your submission related to a patent application or patent. If you do not furnish the requested information, the U.S. Patent and Trademark Office may not be able to process and/or examine your submission, which may result in termination of proceedings or abandonment of the application or expiration of the patent.

The information provided by you in this form will be subject to the following routine uses:

1. The information on this form will be treated confidentially to the extent allowed under the Freedom of Information Act (5 U.S.C. 552) and the Privacy Act (5 U.S.C 552a). Records from this system of records may be disclosed to the Department of Justice to determine whether disclosure of these records is required by the Freedom of Information Act.
2. A record from this system of records may be disclosed, as a routine use, in the course of presenting evidence to a court, magistrate, or administrative tribunal, including disclosures to opposing counsel in the course of settlement negotiations.
3. A record in this system of records may be disclosed, as a routine use, to a Member of Congress submitting a request involving an individual, to whom the record pertains, when the individual has requested assistance from the Member with respect to the subject matter of the record.
4. A record in this system of records may be disclosed, as a routine use, to a contractor of the Agency having need for the information in order to perform a contract. Recipients of information shall be required to comply with the requirements of the Privacy Act of 1974, as amended, pursuant to 5 U.S.C. 552a(m).
5. A record related to an International Application filed under the Patent Cooperation Treaty in this system of records may be disclosed, as a routine use, to the International Bureau of the World Intellectual Property Organization, pursuant to the Patent Cooperation Treaty.
6. A record in this system of records may be disclosed, as a routine use, to another federal agency for purposes of National Security review (35 U.S.C. 181) and for review pursuant to the Atomic Energy Act (42 U.S.C. 218(c)).
7. A record from this system of records may be disclosed, as a routine use, to the Administrator, General Services, or his/her designee, during an inspection of records conducted by GSA as part of that agency's responsibility to recommend improvements in records management practices and programs, under authority of 44 U.S.C. 2904 and 2906. Such disclosure shall be made in accordance with the GSA regulations governing inspection of records for this purpose, and any other relevant (*i.e.*, GSA or Commerce) directive. Such disclosure shall not be used to make determinations about individuals.
8. A record from this system of records may be disclosed, as a routine use, to the public after either publication of the application pursuant to 35 U.S.C. 122(b) or issuance of a patent pursuant to 35 U.S.C. 151. Further, a record may be disclosed, subject to the limitations of 37 CFR 1.14, as a routine use, to the public if the record was filed in an application which became abandoned or in which the proceedings were terminated and which application is referenced by either a published application, an application open to public inspection or an issued patent.
9. A record from this system of records may be disclosed, as a routine use, to a Federal, State, or local law enforcement agency, if the USPTO becomes aware of a violation or potential violation of law or regulation.

PTO/SB/61 (04-07)
Approved for use through 09/30/2007. OMB 0651-0031
U.S. Patent and Trademark Office; U.S. DEPARTMENT OF COMMERCE
Under the Paperwork Reduction Act of 1995, no persons are required to respond to a collection of information unless it displays a valid OMB control number.

PETITION FOR REVIVAL OF AN APPLICATION FOR PATENT ABANDONED UNAVOIDABLY UNDER 37 CFR 1.137(a)	Docket Number (Optional)

First Named Inventor: Art Unit:

Application Number: Examiner:

Filed:

Title:

Attention: Office of Petitions
Mail Stop Petition
Commissioner for Patents
P.O. Box 1450
Alexandria, VA 22313-1450

NOTE: If information or assistance is needed in completing this form, please contact Petitions Information at (571) 272-3282.

The above-identified application became abandoned for failure to file a timely and proper reply to a notice or action by the United States Patent and Trademark Office. The date of abandonment is the day after the expiration date of the period set for reply in the Office notice or action plus any extensions of time actually obtained.

APPLICANT HEREBY PETITIONS FOR REVIVAL OF THIS APPLICATION.
NOTE: A grantable petition requires the following items:
(1) Petition fee.
(2) Reply and/or issue fee.
(3) Terminal disclaimer with disclaimer fee – required for all utility and plant applications filed before June 8, 1995, and for all design applications; and
(4) Adequate showing of the cause of unavoidable delay.

1. Petition fee

☐ Small entity – fee $_____ (37 CFR 1.17(l)). Applicant claims small entity status. See 37 CFR 1.27.

☐ Other than small entity – fee $_____ (37 CFR 1.17(l)).

2. Reply and/or fee

A The reply and/or fee to the above-noted Office action in the form of _____ (identify the type of reply):

☐ has been filed previously on _____ .

☐ is enclosed herewith.

B The issue fee of $ _____

☐ has been filed previously on _____ .

☐ is enclosed herewith.

This collection of information is required by 37 CFR 1.137(a). The information is required to obtain or retain a benefit by the public which is to file (and by the USPTO to process) an application. Confidentiality is governed by 35 U.S.C. 122 and 37 CFR 1.11 and 1.14. This collection is estimated to take 8 hours to complete, including gathering, preparing, and submitting the completed application form to the USPTO. Time will vary depending upon the individual case. Any comments on the amount of time you require to complete this form and/or suggestions for reducing this burden, should be sent to the Chief Information Officer, U.S. Patent and Trademark Office, U.S. Department of Commerce, P.O. Box 1450, Alexandria, VA 22313-1450. DO NOT SEND FEES OR COMPLETED FORMS TO THIS ADDRESS. **SEND TO: Mail Stop Petition, Commissioner for Patents, P.O. Box 1450, Alexandria, VA 22313-1450.**
If you need assistance in completing the form, call 1-800-PTO-9199 and select option 2.

Under the Paperwork Reduction Act of 1995, no persons are required to respond to a collection of information unless it displays a valid OMB control number.

PETITION FOR REVIVAL OF AN APPLICATION FOR PATENT ABANDONED UNAVOIDABLY UNDER 37 CFR 1.137(a)

3. Terminal disclaimer with disclaimer fee

☐ Since this utility/plant application was filed on or after June 8, 1995, no terminal disclaimer is required.

☐ A terminal disclaimer (and disclaimer fee (37 CFR 1.20(d)) of $ _____ for a small entity or $ _____ for other than a small entity) disclaiming the required period of time is enclosed herewith (see PTO/SB/63).

4. An adequate showing of the cause of the delay, and that the entire delay in filing the required reply from the due date for the reply until the filing of a grantable petition under 37 CFR 1.137(a) was unavoidable, is enclosed.

WARNING:

Petitioner/applicant is cautioned to avoid submitting personal information in documents filed in a patent application that may contribute to identity theft. Personal information such as social security numbers, bank account numbers, or credit card numbers (other than a check or credit card authorization form PTO-2038 submitted for payment purposes) is never required by the USPTO to support a petition or an application. If this type of personal information is included in documents submitted to the USPTO, petitioners/applicants should consider redacting such personal information from the documents before submitting them to the USPTO. Petitioner/applicant is advised that the record of a patent application is available to the public after publication of the application (unless a non-publication request in compliance with 37 CFR 1.213(a) is made in the application) or issuance of a patent. Furthermore, the record from an abandoned application may also be available to the public if the application is referenced in a published application or an issued patent (see 37 CFR 1.14). Checks and credit card authorization forms PTO-2038 submitted for payment purposes are not retained in the application file and therefore are not publicly available.

Signature	Date
Typed or printed name	Registration Number, if applicable
Address	Telephone Number
Address	

Enclosure
☐ Fee Payment
☐ Reply
☐ Terminal Disclaimer Form
☐ Additional sheets containing statements establishing unavoidable delay
☐ _____

CERTIFICATE OF MAILING OR TRANSMISSION (37 CFR 1.8(a))

I hereby certify that this correspondence is being:

☐ deposited with the United States Postal Service on the date shown below with sufficient postage as first class mail in an envelope addressed to **Mail Stop Petition**, Commissioner for Patents, P.O. Box 1450, Alexandria, VA 22313-1450.

☐ transmitted by facsimile on the date shown below to the United States Patent and Trademark Office at (571) 273-8300.

Date	Signature
	Typed or printed name of person signing certificate

Under the Paperwork Reduction Act of 1995, no persons are required to respond to a collection of information unless it displays a valid OMB control number.

PETITION FOR REVIVAL OF AN APPLICATION FOR PATENT ABANDONED UNAVOIDABLY UNDER 37 CFR 1.137(a)

NOTE: The following showing of the cause of unavoidable delay must be signed by all applicants or by any other party who is presenting statements concerning the cause of delay.

Signature	Date
Typed or printed name	Registration Number, if applicable

(In the space provided below, please explain in detail the reasons for the delay in filing a proper reply.)

(Please attach additional sheets if additional space is needed.)

Privacy Act Statement

The **Privacy Act of 1974 (P.L. 93-579)** requires that you be given certain information in connection with your submission of the attached form related to a patent application or patent. Accordingly, pursuant to the requirements of the Act, please be advised that: (1) the general authority for the collection of this information is 35 U.S.C. 2(b)(2); (2) furnishing of the information solicited is voluntary; and (3) the principal purpose for which the information is used by the U.S. Patent and Trademark Office is to process and/or examine your submission related to a patent application or patent. If you do not furnish the requested information, the U.S. Patent and Trademark Office may not be able to process and/or examine your submission, which may result in termination of proceedings or abandonment of the application or expiration of the patent.

The information provided by you in this form will be subject to the following routine uses:

1. The information on this form will be treated confidentially to the extent allowed under the Freedom of Information Act (5 U.S.C. 552) and the Privacy Act (5 U.S.C 552a). Records from this system of records may be disclosed to the Department of Justice to determine whether disclosure of these records is required by the Freedom of Information Act.
2. A record from this system of records may be disclosed, as a routine use, in the course of presenting evidence to a court, magistrate, or administrative tribunal, including disclosures to opposing counsel in the course of settlement negotiations.
3. A record in this system of records may be disclosed, as a routine use, to a Member of Congress submitting a request involving an individual, to whom the record pertains, when the individual has requested assistance from the Member with respect to the subject matter of the record.
4. A record in this system of records may be disclosed, as a routine use, to a contractor of the Agency having need for the information in order to perform a contract. Recipients of information shall be required to comply with the requirements of the Privacy Act of 1974, as amended, pursuant to 5 U.S.C. 552a(m).
5. A record related to an International Application filed under the Patent Cooperation Treaty in this system of records may be disclosed, as a routine use, to the International Bureau of the World Intellectual Property Organization, pursuant to the Patent Cooperation Treaty.
6. A record in this system of records may be disclosed, as a routine use, to another federal agency for purposes of National Security review (35 U.S.C. 181) and for review pursuant to the Atomic Energy Act (42 U.S.C. 218(c)).
7. A record from this system of records may be disclosed, as a routine use, to the Administrator, General Services, or his/her designee, during an inspection of records conducted by GSA as part of that agency's responsibility to recommend improvements in records management practices and programs, under authority of 44 U.S.C. 2904 and 2906. Such disclosure shall be made in accordance with the GSA regulations governing inspection of records for this purpose, and any other relevant (*i.e.*, GSA or Commerce) directive. Such disclosure shall not be used to make determinations about individuals.
8. A record from this system of records may be disclosed, as a routine use, to the public after either publication of the application pursuant to 35 U.S.C. 122(b) or issuance of a patent pursuant to 35 U.S.C. 151. Further, a record may be disclosed, subject to the limitations of 37 CFR 1.14, as a routine use, to the public if the record was filed in an application which became abandoned or in which the proceedings were terminated and which application is referenced by either a published application, an application open to public inspection or an issued patent.
9. A record from this system of records may be disclosed, as a routine use, to a Federal, State, or local law enforcement agency, if the USPTO becomes aware of a violation or potential violation of law or regulation.

UNITED STATES PATENT AND TRADEMARK OFFICE

Commissioner for Patents
United States Patent and Trademark Office
P.O. Box 1450
Alexandria, VA 22313-1450
www.uspto.gov

GERARD F DUNNE
156 FIFTH AVE
SUITE 1223
NEW YORK NY 10010

COPY MAILED

JUL 03 2006

OFFICE OF PETITIONS

In re Application of	:	
Jack Britvan	:	
Application No. 60/799,826	:	DECISION DISMISSING PETITION
Filed: May 11, 2006	:	
Attorney Docket No. 709-001	:	

This is a decision on the petition filed June 13, 2006, to accord the above-identified application a filing date of May 11, 2006, with Figures 10 and 11 of the drawings as part of the original disclosure.

Application papers in the above-identified application were filed on May 11, 2006. However, on June 1, 2006 the Office of Initial Patent Examination mailed applicant a "Notice of Omitted Item(s) in a Provisional Application." Applicant was notified that the application papers had been accorded a filing date; however, Figures 10 and 11 of the drawings appeared to have been omitted. The Notice set a two month extendable period for reply.

In response, on June 13, 2006, applicant filed the present petiiton. Applicant asserts that Figures 10 and 11 were filed on May 11, 2006.

The PTO file is the official record of papers originally filed in this application. A review of the official file reveals that Figures 10 and 11 were not filed on May 11, 2006, since those Figures are not present in the file. An applicant alleging that a paper was filed in the PTO and later misplaced has the burden of proving the allegation by a preponderance of the evidence. The assertions in the petition contain counsel's recall of routine events and are not more persuasive than the record of what was filed as shown by the official file. Moreover, listing drawings on an application cover sheet or transmittal letter does not serve as proof that those drawings were filed, but only demonstrates Applicant's intent to file those drawings.

Furthermore, the Office has a well established and well publicized practice of providing a receipt for papers filed in the Office to any applicant desiring a receipt. The practice requires that any paper for which a receipt is desired be filed in the Office with a self-addressed postcard identifying the paper. A postcard receipt which itemizes and properly identifies the papers which are being filed serves as *prima facie* evidence of receipt in the Office of all the items listed thereon on the date stamped thereon by the Office. See MPEP 503. **Applicant has not submitted a proper return postcard showing that Figures 10 and 11 were filed on May 11, 2006.**

Accordingly, the petition is **DISMISSED**.

Applicant may file a request for reconsideration providing they submit a proper postcard receipt showing that Figures 10 and 11 were filed on May 11, 2006.

As the application is a provisional application and no examination is conducted, the matter is not being forwarded to a Group Art Unit.

Further correspondence with respect to this matter should be addressed as follows:

By mail: Mail Stop Petitions
Commissioner for Patents
P.O. Box 1450
Alexandria VA 22313-1450

By FAX: (571)273-8300
Attn: Office of Petitions

Telephone inquiries related to this decision should be directed to the undersigned at (571)272-3207.

Cliff Congo
Petitions Attorney
Office of Petitions

UNITED STATES PATENT AND TRADEMARK OFFICE

Commissioner for Patents
United States Patent and Trademark Office
P.O. Box 1450
Alexandria, VA 22313-1450
www.uspto.gov

WORKMAN NYDEGGER
1000 EAGLE GATE TOWER
60 EAST SOUTH TEMPLE
SALT LAKE CITY, UT 84111

COPY MAILED

OCT 08 2008

OFFICE OF PETITIONS

In re Application of	:	
Gregory Hyde, et. al.	:	
Application No. 60/799,889	:	DECISION GRANTING
Filed: May 13, 2006	:	PETITION
Attorney Docket No. 8211USL1	:	

This is a decision on the petition filed on March 12, 2008, requesting that the above-identified application be accorded a later filing date of May 13, 2006, rather than the presently accorded date of May 12, 2006.

Petitioner alleges that the application was deposited in Express Mail Service on May 13, 2006. In support, the petition is accompanied by a copy of the USPS Track and Confirm search results, which shows that the package in question was accepted on May 13, 2006 at 9:51 am at Menlo Park, CA 94025. It is noted that the Application Transmittal Letter contains the same Express Mail label number.

The Office considers the date the paper or fee is shown to have been deposited as "Express Mail" to be the "date-in" on the Express Mail label (MPEP 513). However, while petitioner filed the instant petition and provided the Office with evidence that shows the Express Mail number was listed on the Application Transmittal Letter prior to mailing of the correspondence, a true copy of the Express Mail mailing Label was not provided. Further, the petition filed on March 12, 2008 states that the Express Mail Label for this application could not be located. Therefore, petitioner must rely on "other official USPS notation", such as, the USPS Track and Confirm records, which corroborates petitioner's statement of deposit on May 13, 2006.

In view of the above, the evidence is convincing that the application was deposited with the U.S. Postal Service on May 13, 2006. Accordingly, the petition is **GRANTED**.

This application file is being referred to the Office of Patent Application Processing for correction of the filing date to May 13, 2006 and for issuance of a corrected filing receipt.

Telephone inquiries relating to this decision should be directed to the undersigned at (571) 272-3226. Telephone inquiries related to OIPE processing should be directed to their hotline at (571) 272-4000.

Andrea Smith
Petitions Examiner
Office of Petitions

UNITED STATES PATENT AND TRADEMARK OFFICE

UNITED STATES DEPARTMENT OF COMMERCE
United States Patent and Trademark Office
Address: COMMISSIONER FOR PATENTS
P.O. Box 1450
Alexandria, Virginia 22313-1450
www.uspto.gov

APPLICATION NUMBER	FILING OR 371(C) DATE	FIRST NAMED APPLICANT	ATTY. DOCKET NO./TITLE
60/799,889	05/12/2006	Gregory Hyde	~~.8211USL1~~ 170de.37

CONFIRMATION NO. 1491

POA ACCEPTANCE LETTER

57360
WORKMAN NYDEGGER
1000 EAGLE GATE TOWER,
60 EAST SOUTH TEMPLE
SALT LAKE CITY, UT 84111

OC000000032490547

Date Mailed: 10/08/2008

NOTICE OF ACCEPTANCE OF POWER OF ATTORNEY

This is in response to the Power of Attorney filed 03/12/2008.

The Power of Attorney in this application is accepted. Correspondence in this application will be mailed to the above address as provided by 37 CFR 1.33.

/amsmith/

Office of Data Management, Application Assistance Unit (571) 272-4000, or (571) 272-4200, or 1-888-786-0101

UNITED STATES PATENT AND TRADEMARK OFFICE

Commissioner for Patents
United States Patent and Trademark Office
P.O. Box 1450
Alexandria, VA 22313-1450
www.uspto.gov

Edward Barsano
10727 E. Monument Dr.
Scottsdale AZ 85262

COPY MAILED

MAR 19 2007

OFFICE OF PETITIONS

In re Application of :
Edward Barsano :

Application No. 60/800,054 : DECISION ON
Filed: May 12, 2006 : PETITION
Title: Fully :
Automated/Robotic/Adaptive Trading System

This is in response to the "Petition regarding unreadable compact-disc" filed on November 27, 2006.

The application was filed on May 12, 2006. However, on September 27, 2006, the Office of Initial Patent Examination (OIPE) mailed a Notice stating that the application had been accorded a filing date of May 12, 2006 but the compact disc(s) were unreadable. The notice required a new duplicate set of disc(s).

The Office is in receipt of the replacement compact disc submitted with the instant petition.

However, a review of the record shows that petitioner has failed to provide an amendment. For provisional applications, OIPE will provide applicant notification and, where appropriate, require correction for virus infected compact discs, unreadable compact discs (or unreadable files thereon), and missing duplicate discs. An amendment to the material on a compact disc must be done by submitting a replacement compact disc with the amended file(s). *The amendment should include a corresponding amendment to the description of the compact disc and the files contained on the compact disc in the paper portion of the specification.* A replacement compact disc containing the amended files must contain all of the files of the original compact disc that were not amended. This will insure that the Office, printer, and public can quickly access all of the current files in an application or patent by referencing only the latest set of compact discs. See MPEP 608.05

In view thereof, the petition is **DISMISSED.**

Further correspondence with respect to this matter should be addressed as follows:

By mail: Mail Stop Petition
Commissioner for Patents
P.O. Box 1450
Alexandria, VA 22313-1450

By facsimile: (571) 273-8300

By delivery service: (FedEx, UPS, DHL, etc.) U.S. Patent and Trademark Office
Customer Service Window,
Randolph Building
401 Dulany Street
Alexandria, VA 22314

Telephone inquiries specific to this decision may be directed to the undersigned at (571) 272-3215.

Charlema R. Grant

Charlema R. Grant
Petitions Attorney
Office of Petitions

UNITED STATES PATENT AND TRADEMARK OFFICE

Commissioner for Patents
United States Patent and Trademark Office
P.O. Box 1450
Alexandria, VA 22313-1450
www.uspto.gov

Edward Barsano
10727 E. Monument Dr.
Scottsdale AZ 85262

COPY MAILED

SEP 2 6 2007

OFFICE OF PETITIONS

In re Application of :
Edward Barsano :

Application No. 60/800,054 : DECISION DISMISSING
Filed: May 12, 2006 : PETITION
Title: Fully Automated/Robotic/ :
Adaptive Trading System

This is in response to the renewed petition filed on April 9, 2007, in effect requesting that the Office withdraw the Notice to File Missing Parts of Provisional Application.

The application was filed on May 12, 2006. However, on September 27, 2006, the Office of Initial Patent Examination (OIPE) mailed a Notice stating that the application had been accorded a filing date of May 12, 2006 but the compact disc(s) were unreadable. The notice required a new duplicate set of disc(s). The disc originally submitted contained bad media, viruses and or unknown or corrupted filed format.

The Office is in receipt of the replacement compact disc submitted with the instant petition. The disc(s) have been reviewed but determined that the disc(s) contain files that are non-ASCII.

37 CFR 1.52 (e) is applicable to all electronic documents that are to become part of a permanent United States and Patent and Trademark Office records in the File of a Patent Application or Reexamination. 37 CFR 1.52(e)(3)(I) clearly states that each compact disc must be in compliance with American Standard Code for Information Interchange (ASCII). 37 CFR 1.53(e)(4) requires any compact disc must be submitted in duplicate. Petitioner failed to adhere to the requirements of 37 CFR 1.52(e).

The petition will be treated as a proper reply to the Notice to

Omitted Parts, since the information contained on the compact disc is not the type of information that can be submitted on compact disc and applicant cannot submit compliant disc.

In view thereof, the petition is **DISMISSED**.

The petition will be treated as a proper reply to the Notice to File Omitted Parts, since the information contained on the compact disc is not the type of information that can be submitted on compact disc and applicant cannot submit compliant disc.

The compact disc will not be considered as part of the application.

Subject to the provisions of 35 U.S.C. 119(e)(3) and § 1.7(b), a provisional application will not be regarded as pending after twelve months from its filing date under any circumstances.

The application will maintain a filing date of **May 12, 2006** using the application papers deposited on that date. The compact disc will not be considered as part of the application

Telephone inquiries specific to this decision may be directed to the undersigned at (571) 272-3215.

Charlema R. Grant

Charlema R. Grant
Petitions Attorney
Office of Petitions

UNITED STATES PATENT AND TRADEMARK OFFICE

COMMISSIONER FOR PATENTS
UNITED STATES PATENT AND TRADEMARK OFFICE
P.O. BOX 1450
ALEXANDRIA, VA 22313-1450
www.uspto.gov
DIW Oct-06

HELLER EHRMAN LLP
275 MIDDLEFIELD ROAD
MENLO PARK CA 94025-3506

COPY MAILED
OCT 19 2006
OFFICE OF PETITIONS

In re Application of	:	
Cowans et al.	:	
Application No. 60/800,277	:	DECISION ON PETITION
Filed: 12 May, 2006	:	
Atty Docket No. 39740-0026PR2	:	

This is a decision on the petition filed on 31 July, 2006, which is treated as a petition under 37 CFR 1.53 requesting that the above-identified application be accorded a filing date of 12 May, 2006, with Pages 251 through 257 as a part of the original disclosure.

The petition is granted.

The application was filed on 12 May, 2006.

Accordingly, on 31 May, 2006, Initial Patent Examination Division mailed a Notice of Omitted Items in a Provisional Application, stating that the application had been accorded a filing date of 12 May, 2006, but that Pages 251-257 of the specification (description and claims) appeared to have been omitted from the application.

In response, on 31 July, 2006, the present petition and a copy of Pages 251-257 were filed. Petitioners argue that Pages 251-257 were filed with the other application papers on 12 May, 2006, but were subsequently misplaced in the U.S. Patent and Trademark Office (Office). In support, a copy of petitioners' postcard receipt was supplied with the present petition. The postcard receipt shows an "Office date" stamp of "051206" and the above-identified application number, and identifies the application by the first named inventor's name, attorney docket number and invention title, and acknowledges receipt of, *inter alia*, 257 pages of specification. Petitioners request that the application, including Pages 251-257 of the specification, be accorded a filing date of 12 May, 2006.

A review of the record reveals that 250 pages of specification and claims were received on 12 May, 2006. No Pages 251-257 are

located among the specification pages received on that date. However, the evidence is convincing that the application papers deposited on 12 May, 2006, included Pages 251-257, which were subsequently misplaced in the Office. Therefore, the application, including Pages 251-257, is entitled to a filing date of 12 May, 2006.

The "Notice" mailed on 31 May, 2006, is vacated.

In view of the above, the petition is granted. The petition fee will be refunded as the petition was necessitated by Office error.

The application will be processed with the copy of Pages 251-257 of the specification, supplied on 31 July, 2006, as a part of the original disclosure.

The application is being returned to Initial Patent Examination Division for further processing with a filing date of 12 May, 2006, using the application papers filed on that date and the copy of Pages 251-257 of the specification supplied with the present petition.

Telephone inquiries should be directed to the undersigned at 571-272-3231.

D Wood

Douglas I. Wood
Senior Petitions Attorney
Office of Petitions

UNITED STATES PATENT AND TRADEMARK OFFICE

Commissioner for Patents
United States Patent and Trademark Office
P.O. Box 1450
Alexandria, VA 22313-1450
www.uspto.gov

SEED INTELLECTUAL PROPERTY
LAW GROUP PLLC
701 FIFTH AVE
SUITE 6300
SEATTLE WA 98104-7092

COPY MAILED

SEP 2 0 2006

OFFICE OF PETITIONS

In re Application of :
Bothe et al. :
Application No. 60/800,320 :
Filed: May 11, 2006 :
Attorney Docket Number: :
140140.420P1 :

This is a decision on the Petition to Correct Filing Date Under 37 CFR § 1.10(c), filed July 31, 2006. The petition is properly treated under 37 CFR 1.10(d).

This Petition is hereby **granted**.

Petitioner alleges that the application was deposited in Express Mail service on May 11, 2006. In support of this assertion, the petition is accompanied by a copy of Express Mail label No. EV628935588US. A review of the Express Mail label, No. EV628935588US, reveals that the "Date In" indicated thereon is illegible. However, the Express Mail label contains a United States Postal Service (USPS) stamp dated May 11, 2006. The same Express Mail label number was placed on the original application papers located in the official file.

The application is being referred to the Office of Initial Patent Examination for correction of the filing date to May 11, 2006, and for the mailing of a Corrected Filing Receipt.

Telephone inquiries concerning this matter should be directed to Petitions Attorney Derek L. Woods at (571) 272-3232.

Derek L. Woods
Attorney
Office of Petitions

UNITED STATES PATENT AND TRADEMARK OFFICE

Commissioner for Patents
United States Patent and Trademark Office
P.O. Box 1450
Alexandria, VA 22313-1450
www.uspto.gov

GENERAL MILLS, INC.
P.O. BOX 1113
MINNEAPOLIS, MN 55440

COPY MAILED

SEP 2 5 2006

OFFICE OF PETITIONS

In re Application of	:	
Schlueter et al.	:	DECISION ON PETITION
Application No. 60/800,951	:	
Filed: May 17, 2006	:	
Attorney Docket No. GMIR6581	:	

This is a decision on the "PETITION UNDER 37 CFR 1.182" filed July 13, 2006. Petitioner requests that the above-identified application be accorded a filing date of May 17, 2006, with figures 1-4 considered part of the original application disclosure.

Application papers in the above-identified application were filed on May 17, 2006. However, on June 8, 2006, the Office mailed a "Notice of Omitted Item(s) in a Provisional Application," advising applicants that the application papers had been accorded a filing date; however, figures 1,2,3 and 4[1] described in the specification appeared to have been omitted.

In response, applicants timely filed the instant petition. Applicants maintain that all the drawings were indeed provided at the original time of filing. In support thereof, applicants submit a copy of their return postcard from the USPTO. Applicants also submit a copy of the four (4) sheets of drawings.

A postcard receipt, which itemizes and properly identifies the items, which are being filed, serves as *prima facie* evidence of receipt in the Office of all items listed thereon on the date stamped thereon by the Office. See MPEP 503. A review of

[1] These were all of the drawings in the application. Nonetheless, given that the application-as-filed included at least one method claim, the application was accorded a filing date. See MPEP 601.01(f).

petitioner's postcard receipt reveals that: 1) it was date stamped as received by the Office on May 17, 2006 and the papers filed therewith assigned provisional application No. 60/800951; 2) it specifically identifies the items being filed, including "Figs. 1-4 (4 sheets)" and 3) it lacks any annotation of non-receipt of any item denoted on the postcard. Thus, petitioner has shown that the 4 sheets of drawings, containing figures 1-4, were filed on May 17, 2006. It is concluded that petitioner has shown that figures 1-4 were among the items present in the application on the date of deposit and should be included in the original application disclosure.

Accordingly, the petition is **GRANTED**.

Given the basis for granting the petition, the petition fee is being refunded to Deposit Account No. 07-0900, as authorized.

The application is being returned to the Office of Initial Patent Examination (OIPE) for:

· reprocessing with a filing date of May 17, 2006, using the application papers received in the Office and presently accorded that date; and 4 sheets of drawings containing figures 1,2,3 and 4 re-supplied on petition filed July 13, 2006; and

. indication in Office records, as appropriate, that 4 sheets of drawings were present in the application on filing.

Applicants will receive appropriate notifications regarding the fees owed, if any, and other information in due course from OIPE.

Telephone inquiries specific to this decision should be directed to the undersigned at (571) 272-3219.

Nancy Johnson
Senior Petitions Attorney
Office of Petitions

UNITED STATES PATENT AND TRADEMARK OFFICE

COMMISSIONER FOR PATENTS
UNITED STATES PATENT AND TRADEMARK OFFICE
P.O. BOX 1450
ALEXANDRIA, VA 22313-1450
www.uspto.gov

COPY MAILED
AUG 23 2006
OFFICE OF PETITIONS

BARNES & THORNBURG LLP
11 SOUTH MERIDIAN
INDIANAPOLIS, IN 46204

In re Application of
Sherry L. Voytik-Harbin
Application No. 60/801,130
Filed: May 16, 2006
Attorney Docket No. 3220-200207

DECISION GRANTING PETITION

This is a decision on the petition, filed July 13, 2006, under 37 CFR 1.10(c) requesting that the above-identified application be accorded a filing date of May 16, 2006, instead of the presently accorded date of May 17, 2006.

Petitioner alleges that the application was deposited in "Express Mail" service with the United States Postal Service (USPS), on May 16, 2006. In support, petitioners provide, *inter alia*, a copy of the Express Mail label, No. EV 417057226 US showing a "date-in" of "05 16 06." The same Express Mail tracking number appears on the transmittal letter found in the file.

The Office considers the date the paper or fee is shown to have been deposited as "Express Mail" to be the "Date In" on the Express Mail label, MPEP 513. That is the date that verifies that the package was actually mailed. The evidence is convincing that the application was deposited as "Express Mail" with the US Postal Service on May 16, 2006.

The petition is **GRANTED**.

The application is being referred to the Office of Initial Patent Examination (OIPE) for correction of the filing date to **May 16, 2006** and for issuance of a corrected filing receipt.

Telephone inquires related to this decision should be directed to the undersigned at (571) 272-3204. Telephone inquiries related to OIPE processing should be directed to their hotline at (571) 272-4000.

Sherry D. Brinkley
Petitions Examiner
Office of Petitions

UNITED STATES PATENT AND TRADEMARK OFFICE

Commissioner for Patents
United States Patent and Trademark Office
P.O. Box 1450
Alexandria, VA 22313-1450
www.uspto.gov

JJGJR.: 12-07

Paper No: __

MYERS BIGEL
SIBLEY & SAJOVEC, P.A.
P.O. BOX 37428
RALEIGH NC 27627

COPY MAILED

DEC 28 2007

OFFICE OF PETITIONS

In re Application of
Frank, et al. :
Application No. 60/801,237 : DECISION ON PETITION
Filed: 16 May, 2006 :
Attorney Docket No. 9400-260PR (060163) :

This is a decision on the petition filed on 26 July, 2006, and considered under 37 C.F.R. §1.53.

The Office regrets the delay in addressing the matter—the petition was presented to the attorneys in the Office of Petitions only at this writing.

For the reasons set forth below, the petition under 37 C.F.R. §1.53 is **GRANTED**.

BACKGROUND

The instant application was deposited on 16 May, 2006

On 7 June, 2006, the Office of Initial Patent Examination (OIPE) mailed a Filing Receipt; on 10 July, 2006, Petitioner requested a corrected filing receipt (he averred that the receipt and the image file wrapper (IFW) reflected an omitted item (to wit: "Fig. 13" as described in the specification), and thus, the application had been accorded a filing date without that figure; and following a 11 July, 2006, Notice from OIPE that a petition was required in the matter, Petitioner filed the instant petition on 26 July, 2006, .

OIPE indicated that Petitioner's alternatives were to:

- contend via petition that Fig. 13, as described in the specification, had been submitted on deposit and so evidence that condition with the proper supporting documentation (i.e., a date stamped receipt card (see: MPEP §503)) along with a copy of the specification; or

- submit Fig. 13, as described in the specification, and accept the date of submission as the filing date;

and OIPE indicated a two- (2-) month period for reply.

On 26 July, 2006, Petitioner submitted the instant petition, including therewith, *inter alia*, what is averred to be a true copy of Fig. 13, as described in the specification, along with a copy of Petitioner's date-stamped receipt card.

ANALYSIS

A search of the official file reveals that:

- on 16 May, 2006, Petitioner deposited the instant application;

- the Office record reflects that Fig. 13, as described in the specification, was missing upon deposit.

- the date-stamped ("051606") receipt card evidences–in pertinent part–the following:

***
Kindly acknowledge receipt of the accompanying
by placing your receiving date stamp hereon ***
Cover Sheet for Filing Provisional Patent Application (in duplicate):
Application (4 pages, 13 drawings sheets ***) (Emphasis supplied)
***

Because Petitioner's receipt card adequately itemized on the receipt card the contents of the application as to the pages deposited, it is concluded that the application, including Fig. 13, as described in the specification, was deposited with the Office on 16 May, 2006, and Fig. 13, as described in the specification, subsequently was misplaced in the Office.

Accordingly, the application, including Fig. 13, as described in the specification, is entitled to a filing date of 16 May, 2006.

The receipt mailed on 3 July, 2006, was sent in error and is hereby **vacated** to the extent that it stated that the application was filed omitting Fig. 13, as described in the specification.

CONCLUSION

The petition is **granted**; the petition fee waived and it does not appear that one was charged (should Petitioner find that a charge was made, Petitioner may submit a request to the Office of Finance along with a copy of this decision).

This application is released to OIPE for further processing with a filing date of 16 May, 2006, for the entire application including Fig. 13, as described in the specification, with 4 pages of the specification (description, claims, abstract), 47 pages of Appendix thereto and 13 sheets of drawings (Figs. 1 – 13), as described in the specification, using:

- **pages 1 – 4 of (and 47 pages of Appendix to) the specification (description, claims, abstract) and 12 sheets of drawings (Figs. 1 – 12) deposited on 16 May, 2006; and**
- **and Fig. 13, as described in the specification, deposited on 26 July, 2006; and further**

with direction to OIPE to correct Office records and provide to Petitioner a corrected filing receipt setting forth a filing date of 16 May, 2006, and reflecting therein that 4 pages of (and 47 pages of Appendix to) the specification (description, claims, abstract) and 13 sheets of drawings (Figs. 1 – 13) were present on filing.

While telephone inquiries regarding this decision may be directed to the undersigned at (571) 272-3214, it is noted that all practice before the Office is in writing (see: 37 C.F.R. §1.2[1]) and the proper authority for action on any matter in this regard are the statutes (35 U.S.C.), regulations (37 C.F.R.) and the commentary on policy (MPEP). Therefore, no telephone discussion may be controlling or considered authority for Petitioner's/Caller's action(s).

John J. Gillon, Jr.
Senior Attorney
Office of Petitions

---

[1] The regulations at 37 C.F.R. §1.2 provide:

§1.2 Business to be transacted in writing.

All business with the Patent and Trademark Office should be transacted in writing. The personal attendance of applicants or their attorneys or agents at the Patent and Trademark Office is unnecessary. The action of the Patent and Trademark Office will be based exclusively on the written record in the Office. No attention will be paid to any alleged oral promise, stipulation, or understanding in relation to which there is disagreement or doubt.

UNITED STATES PATENT AND TRADEMARK OFFICE

COMMISSIONER FOR PATENTS
UNITED STATES PATENT AND TRADEMARK OFFICE
P.O. BOX 1450
ALEXANDRIA, VA 22313-1450
www.uspto.gov
DIW Nov-06

LAW OFFICES OF DAVID L. HOFFMAN
27023 MCBEAN PKWY
SUITE 422
VALENCIA CA 91355

COPY MAILED
NOV 07 2006
OFFICE OF PETITIONS

In re Application of	:	
David Duncan	:	
Application No. 60/801,480	:	ON PETITION
Filed: 17 May, 2006	:	
Atty Docket No. 06-10062	:	

This is a decision on the paper filed on 14 August, 2006, which is treated as a petition under 37 CFR 1.53 requesting that the above-identified provisional application, including three (3) sheets of drawings, be accorded a filing date of 17 May, 2006.

The petition is **GRANTED**.

The application was filed on 17 May, 2006. Accordingly, on 8 June, 2006, Initial Patent Examination Division mailed a Notice of Incomplete Provisional Application stating that the application had not been accorded a filing date because been deposited without drawings.

In response, on 14 August, 2006, the present petition and a copy of three (3) sheets of drawings, were filed. Petitioner argues that three (3) drawing sheets was filed with the other application papers on 17 May, 2006, but were subsequently misplaced in the U.S. Patent and Trademark Office (Office). In support, a copy of petitioner's postcard receipt was supplied with the present petition. The postcard receipt shows an "Office-date" stamp dated "051706" and contains the above-identified application number. The postcard receipt identifies the application by the attorney docket number and acknowledges receipt of, *inter alia*, three (3) sheet(s) of drawings. Petitioner request that the application, including the three (3) sheets of drawings, be accorded a filing date of 17 May, 2006.

A review of the record reveals that no sheets of drawings received on 17 May, 2006, are located among the application papers received on that date. However, the evidence is convincing that the application papers deposited on 17 May, 2006, included three (3) sheets of drawings, which were subsequently misplaced in the Office. Therefore, the application, including three (3) sheets of drawings, is entitled to a filing date of 17 May, 2006.

In view of the above, the petition is granted. The Notice of Incomplete Provisional Application is withdrawn. As the petition was necessitated by an error on the part of the Office, no petition fee is due. The fee paid will be refunded to counsel.

The application will be processed with the copy of the three (3) sheets of drawings supplied on 14 August, 2006, as a part of the original disclosure.

The application is being referred to Initial Patent Examination Division for further processing with a filing date of 17 May, 2006, using the application papers filed on that date, and the copy of three (3) sheets of drawings supplied with the present petition, and for an indication in Office records that three (3) sheets of drawings were present on filing.

Telephone inquiries specific to this matter should be directed to the undersigned at 571 272-3231.

D Wood

Douglas I. Wood
Senior Petitions Attorney
Office of Petitions

UNITED STATES PATENT AND TRADEMARK OFFICE

Commissioner for Patents
United States Patent and Trademark Office
P.O. Box 1450
Alexandria, VA 22313-1450
www.uspto.gov

HOWARD CHEN, ESQ.
PRESTON GATES & ELLIS LLP
SUITE 1700
55 SECOND STREET
SAN FRANCISCO, CA 94105

COPY MAILED

APR 0 3 2007

OFFICE OF PETITIONS

In re Application of	:	
Hedayat et al.	:	
Application No. 60/801,935	:	ON PETITION
Filed: May 19, 2006	:	
Attorney Docket No. NV46 Prov	:	

This is a decision on the petition under 37 C.F.R. § 1.182, filed January 23, 2007, to change the name of an inventor.

The petition is **GRANTED.**

The name will be changed from REZA HEDAYAT to AHMADREZA HEDAYAT.

Petitioner submitted $130.00 towards payment of the $400.00 petition fee. Accordingly, an additional $270.00 will be charged to petitioner's deposit account as previously authorized.

Telephone inquiries regarding this decision should be directed to the undersigned at (571) 272-3206.

Liana Walsh
Petitions Examiner
Office of Petitions

Enclosure: Corrected Filing Receipt

UNITED STATES PATENT AND TRADEMARK OFFICE

UNITED STATES DEPARTMENT OF COMMERCE
United States Patent and Trademark Office
Address: COMMISSIONER FOR PATENTS
P.O. Box 1450
Alexandria, Virginia 22313-1450
www.uspto.gov

APPL NO.	FILING OR 371(c) DATE	ART UNIT	FIL FEE REC'D	ATTY.DOCKET NO	TOT CLMS	IND CLMS
60/801,935	05/19/2006		100	NV46 Prov		

CONFIRMATION NO. 9942
CORRECTED FILING RECEIPT
OC000000023189355
OC000000023189355

Howard Chen, Esq.
Preston Gates & Ellis LLP
Suite 1700
55 Second Street
San Francisco, CA 94105

Date Mailed: 03/30/2007

Receipt is acknowledged of this provisional Patent Application. It will not be examined for patentability and will become abandoned not later than twelve months after its filing date. Be sure to provide the U.S. APPLICATION NUMBER, FILING DATE, NAME OF APPLICANT, and TITLE OF INVENTION when inquiring about this application. Fees transmitted by check or draft are subject to collection. Please verify the accuracy of the data presented on this receipt. **If an error is noted on this Filing Receipt, please mail to the Commissioner for Patents P.O. Box 1450 Alexandria Va 22313-1450. Please provide a copy of this Filing Receipt with the changes noted thereon. If you received a "Notice to File Missing Parts" for this application, please submit any corrections to this Filing Receipt with your reply to the Notice. When the USPTO processes the reply to the Notice, the USPTO will generate another Filing Receipt incorporating the requested corrections (if appropriate).**

Applicant(s)

Ahmadreza Hedayat, Richardson, TX;
Hang Jin, Plano, TX;
Li Guo, Irving, TX;
John Grabner, Plano, TX;

Power of Attorney:
Ting-Mao Chao--L0119

If Required, Foreign Filing License Granted: 06/07/2006

The country code and number of your priority application, to be used for filing abroad under the Paris Convention, is US60/801,935

Projected Publication Date: None, application is not eligible for pre-grant publication

Non-Publication Request: Not applicable

Early-Publication Request: Not applicable

**** SMALL ENTITY ****

Title

Optimized diversity combining scheme

PROTECTING YOUR INVENTION OUTSIDE THE UNITED STATES

Since the rights granted by a U.S. patent extend only throughout the territory of the United States and have no effect in a foreign country, an inventor who wishes patent protection in another country must apply for a patent in a specific country or in regional patent offices. Applicants may wish to consider the filing of an international application under the Patent Cooperation Treaty (PCT). An international (PCT) application generally has the same effect as a regular national patent application in each PCT-member country. The PCT process **simplifies** the filing of patent applications on the same invention in member countries, but **does not result** in a grant of "an international patent" and does not eliminate the need of applicants to file additional documents and fees in countries where patent protection is desired.

Almost every country has its own patent law, and a person desiring a patent in a particular country must make an application for patent in that country in accordance with its particular laws. Since the laws of many countries differ in various respects from the patent law of the United States, applicants are advised to seek guidance from specific foreign countries to ensure that patent rights are not lost prematurely.

Applicants also are advised that in the case of inventions made in the United States, the Director of the USPTO must issue a license before applicants can apply for a patent in a foreign country. The filing of a U.S. patent application serves as a request for a foreign filing license. The application's filing receipt contains further information and guidance as to the status of applicant's license for foreign filing.

Applicants may wish to consult the USPTO booklet, "General Information Concerning Patents" (specifically, the section entitled "Treaties and Foreign Patents") for more information on timeframes and deadlines for filing foreign patent applications. The guide is available either by contacting the USPTO Contact Center at 800-786-9199, or it can be viewed on the USPTO website at http://www.uspto.gov/web/offices/pac/doc/general/index.html.

For information on preventing theft of your intellectual property (patents, trademarks and copyrights), you may wish to consult the U.S. Government website, http://www.stopfakes.gov. Part of a Department of Commerce initiative, this website includes self-help "toolkits" giving innovators guidance on how to protect intellectual property in specific countries such as China, Korea and Mexico. For questions regarding patent enforcement issues, applicants may call the U.S. Government hotline at 1-866-999-HALT (1-866-999-4158).

LICENSE FOR FOREIGN FILING UNDER
Title 35, United States Code, Section 184
Title 37, Code of Federal Regulations, 5.11 & 5.15

GRANTED

The applicant has been granted a license under 35 U.S.C. 184, if the phrase "IF REQUIRED, FOREIGN FILING LICENSE GRANTED" followed by a date appears on this form. Such licenses are issued in all applications where the conditions for issuance of a license have been met, regardless of whether or not a license may be required as set forth in 37 CFR 5.15. The scope and limitations of this license are set forth in 37 CFR 5.15(a) unless an earlier license has been issued under 37 CFR 5.15(b). The license is subject to revocation upon written notification. The date indicated is the effective date of the license, unless an earlier license of similar scope has been granted under 37 CFR 5.13 or 5.14.

This license is to be retained by the licensee and may be used at any time on or after the effective date thereof unless it is revoked. This license is automatically transferred to any related applications(s) filed under 37 CFR 1.53(d). This license is not retroactive.

The grant of a license does not in any way lessen the responsibility of a licensee for the security of the subject

matter as imposed by any Government contract or the provisions of existing laws relating to espionage and the national security or the export of technical data. Licensees should apprise themselves of current regulations especially with respect to certain countries, of other agencies, particularly the Office of Defense Trade Controls, Department of State (with respect to Arms, Munitions and Implements of War (22 CFR 121-128)); the Bureau of Industry and Security, Department of Commerce (15 CFR parts 730-774); the Office of Foreign Assets Control, Department of Treasury (31 CFR Parts 500+) and the Department of Energy.

NOT GRANTED

No license under 35 U.S.C. 184 has been granted at this time, if the phrase "IF REQUIRED, FOREIGN FILING LICENSE GRANTED" DOES NOT appear on this form. Applicant may still petition for a license under 37 CFR 5.12, if a license is desired before the expiration of 6 months from the filing date of the application. If 6 months has lapsed from the filing date of this application and the licensee has not received any indication of a secrecy order under 35 U.S.C. 181, the licensee may foreign file the application pursuant to 37 CFR 5.15(b).

UNITED STATES PATENT AND TRADEMARK OFFICE

Commissioner for Patents
United States Patent and Trademark Office
P.O. Box 1450
Alexandria, VA 22313-1450
www.uspto.gov

JJGJr: 08-06

BROOKS & CAMERON, PLLC
1221 NICOLLET MALL #500
MINNEAPOLIS MN 55403

COPY MAILED
SEP 1 1 2006
OFFICE OF PETITIONS

In re Application of	:	
Ide, et al.	:	
Application No. 60/802,190	:	ON PETITION
Receipt/Filed: 19 May, 2006	:	
Attorney Docket No. 154.007999P	:	

This is a decision on the petition filed on 16 June, 2006, to obtain a filing date for the instant application, and considered here under 37 C.F.R. §1.53.

For the reasons set forth below, the petition is **DISMISSED**.

BACKGROUND

The record reflects that:

- the instant application was deposited on 19 May, 2006;
- on 8 June, 2006, the Office mailed a Notice of Incomplete Provisional Application (the Notice) stating that the application had not been accorded a filing date because it had been deposited without drawings as required under 35 U.S.C. §113 (first sentence).

OIPE indicated that Petitioner might:

- contend via petition that the drawings were submitted, or that they were not necessary for a filing date; or
- file a new provisional application in that amendment of provisional applications is not permitted (see: MPEP §601.01(b).).

OIPE set a two- (2-) month period for reply.

On 16 June, 2006, Petitioner submitted the instant petition, including therewith, *inter alia*, a receipt card (see: MPEP §503[1])–however, it clearly bears no date stamp as to receipt by the Office–and a transmittal form (which only indicates what Petitioner may have planned to deposit rather than what Petitioner in fact deposited), seeking a 19 May, 2006, filing date for the application. Petitioner avers therein that the figures were included on filing.

ANALYSIS

A search of the official file reveals that:

- on 19 May, 2006, Petitioner deposited the instant application;
- the receipt card bears no evidence of receipt and/or acknowledgment of receipt of the figure in question by the Office;

---

[1] MPEP §503 provides in pertinent part:

§503 Application Number and Filing Receipt

* * *

A return postcard should be attached to *each* patent application for which a receipt is desired. It is important that the return postcard itemize all of the components of the application. If the postcard does not itemize each of the components of the application, it will not serve as evidence that any component which was not itemized was received by the United States Patent and Trademark Office (USPTO). It should be recognized that the identification of an application by application number does not necessarily signify that the USPTO has accepted the application as complete (37 C.F.R. §1.53(a)).

* * *

RETURN POSTCARD

If a receipt of any item (e.g., paper or fee) filed in the USPTO is desired, it may be obtained by enclosing with the paper a self-addressed postcard specifically identifying the item. The USPTO will stamp the receipt date on the postcard and place it in the outgoing mail. A postcard receipt which itemizes and properly identifies the items which are being filed serves as *prima facie* evidence of receipt in the USPTO of all the items listed thereon on the date stamped thereon by the USPTO.

The identifying data on the postcard should be so complete as to clearly identify the item for which receipt is requested. For example, the postcard should identify the applicant's name, application number (if known), confirmation number (if known), filing date, interference number, title of the invention, etc. The postcard should also identify the type of paper being filed, e.g., new application, affidavit, amendment, notice of appeal, appeal brief, drawings, fees, motions, supplemental oath or declaration, petition, etc., and the number of pages being submitted. If a new application is being filed, all parts of the application being submitted should be separately listed on the postcard, e.g., the number of pages of specification (including written description, claims and abstract), number of claims, number of sheets of drawings, number of pages of oath/declaration, number of pages of cover sheet (provisional application).

The postcard receipt will not serve as *prima facie* evidence of receipt of any item which is not adequately itemized on the postcard. For example, merely listing on the postcard "a complete application" or "patent application" will not serve as a proper receipt for each of the required components of an application (e.g., specification (including claims), drawings (if necessary), oath or declaration and the application filing fee) or missing portions (e.g., pages, sheets of drawings) of an application if one of the components or portion of a component is found to be missing by the USPTO. Each separate component should be specifically and properly itemized on the postcard. Furthermore, merely incorporating by reference in the postcard receipt, the items listed in a transmittal letter will not serve as *prima facie* evidence of receipt of those items.

The person receiving the item(s) in the USPTO will check the listing on the postcard against the item(s) being filed to be sure they are properly identified and that all the items listed on the postcard are presently being submitted to the USPTO. If any of the items listed on the postcard are not being submitted to the USPTO, those items will be crossed off and the post-card initialed by the person receiving the items. Upon return of a postcard receipt from the USPTO, the postcard receipt should be promptly reviewed by the person who filed the items to ensure that every item specifically denoted on the postcard was received by the USPTO. If the postcard receipt has been annotated to indicate that a particular item denoted on the postcard was not received by the USPTO, the postcard receipt will not serve as *prima facie* evidence of receipt of that item in the USPTO. (Emphasis supplied.)

Petitioner avers that the receipt card and the transmittal page support Petitioner's averment.

As indicated above, this clearly is incorrect–there are no documents provided by Petitioner evidencing Office receipt of the figure in question.

CONCLUSION

The petition is **dismissed**; the error was not of the Office and the fee is not waived. The 8 June, 2006, Notice of Incomplete Provisional Application will not be disturbed.

Petitioner may file a new application.

The instant application is released to OIPE for further processing as necessary consistent with this decision.

While telephone inquiries regarding this decision may be directed to the undersigned at (571) 272-3214, it is noted that all practice before the Office is in writing (see: 37 C.F.R. §1.2[2]) and the proper authority for action on any matter in this regard are the statutes (35 U.S.C.), regulations (37 C.F.R.) and the commentary on policy (MPEP). Therefore, no telephone discussion may be controlling or considered authority for Petitioner's action(s).

John J. Gillon, Jr.
Senior Attorney
Office of Petitions

---

[2] The regulations at 37 C.F.R. §1.2 provide:
§1.2 Business to be transacted in writing.
All business with the Patent and Trademark Office should be transacted in writing.The personal attendance of applicants or their attorneys or agents at the Patent and Trademark Office is unnecessary. The action of the Patent and Trademark Office will be based exclusively on the written record in the Office. No attention will be paid to any alleged oral promise, stipulation,or understanding in relation to which there is disagreement or doubt.

UNITED STATES PATENT AND TRADEMARK OFFICE

Commissioner for Patents
United States Patent and Trademark Office
P.O. Box 1450
Alexandria, VA 22313-1450
www.uspto.gov

JJGJr: 02-07

BROOKS & CAMERON, PLLC
1221 NICOLLET MALL #500
MINNEAPOLIS MN 55403

COPY MAILED

MAR 0 1 2007

OFFICE OF PETITIONS

In re Application of :
Ide, et al. :
Application No. 60/802,190 : ON PETITION
Receipt/Filed: 19 May, 2006 :
Attorney Docket No. 154.007999P :

This is a decision on the renewed petition filed on 25 September, 2006, to obtain a filing date for the instant application, and considered here under 37 C.F.R. §1.53.

For the reasons set forth below, the petition is **GRANTED**.

BACKGROUND

The record reflects that:

- the instant application was deposited on 19 May, 2006;
- on 8 June, 2006, the Office mailed a Notice of Incomplete Provisional Application (the Notice) stating that the application had not been accorded a filing date because it had been deposited without drawings as required under 35 U.S.C. §113 (first sentence).

OIPE indicated that Petitioner might:

- contend via petition that the drawings were submitted, or that they were not necessary for a filing date; or
- file a new provisional application in that amendment of provisional applications is not permitted (see: MPEP §601.01(b).).

OIPE set a two- (2-) month period for reply.

On 16 June, 2006, Petitioner submitted the original petition, including therewith, *inter alia*, a receipt card (see: MPEP §503[1])–however, it clearly bears no date stamp as to receipt by the Office–and a transmittal form (which only indicates what Petitioner may have planned to deposit rather than what Petitioner in fact deposited), seeking a 19 May, 2006, filing date for the application. Petitioner avers therein that the figures were included on filing. Because Petitioner failed to make a proper showing, the petition was dismissed on 11 September, 2006. Petitioner refiled his petition, this time including therewith a copy of the date-stamped ("051906") receipt card.

ANALYSIS

A search of the official file reveals that:

- on 19 May, 2006, Petitioner deposited the instant application;

---

[1] MPEP §503 provides in pertinent part:

§503 Application Number and Filing Receipt

* * *

A return postcard should be attached to *each* patent application for which a receipt is desired. It is important that the return postcard itemize all of the components of the application. If the postcard does not itemize each of the components of the application, it will not serve as evidence that any component which was not itemized was received by the United States Patent and Trademark Office (USPTO). It should be recognized that the identification of an application by application number does not necessarily signify that the USPTO has accepted the application as complete (37 C.F.R. §1.53(a)).

* * *

RETURN POSTCARD

If a receipt of any item (e.g., paper or fee) filed in the USPTO is desired, it may be obtained by enclosing with the paper a self-addressed postcard specifically identifying the item. The USPTO will stamp the receipt date on the postcard and place it in the outgoing mail. A postcard receipt which itemizes and properly identifies the items which are being filed serves as *prima facie* evidence of receipt in the USPTO of all the items listed thereon on the date stamped thereon by the USPTO.

The identifying data on the postcard should be so complete as to clearly identify the item for which receipt is requested. For example, the postcard should identify the applicant's name, application number (if known), confirmation number (if known), filing date, interference number, title of the invention, etc. The postcard should also identify the type of paper being filed, e.g., new application, affidavit, amendment, notice of appeal, appeal brief, drawings, fees, motions, supplemental oath or declaration, petition, etc., and the number of pages being submitted. If a new application is being filed, all parts of the application being submitted should be separately listed on the postcard, e.g., the number of pages of specification (including written description, claims and abstract), number of claims, number of sheets of drawings, number of pages of oath/declaration, number of pages of cover sheet (provisional application).

The postcard receipt will not serve as *prima facie* evidence of receipt of any item which is not adequately itemized on the postcard. For example, merely listing on the postcard "a complete application" or "patent application" will not serve as a proper receipt for each of the required components of an application (e.g., specification (including claims), drawings (if necessary), oath or declaration and the application filing fee) or missing portions (e.g., pages, sheets of drawings) of an application if one of the components or portion of a component is found to be missing by the USPTO. Each separate component should be specifically and properly itemized on the postcard. Furthermore, merely incorporating by reference in the postcard receipt, the items listed in a transmittal letter will not serve as *prima facie* evidence of receipt of those items.

The person receiving the item(s) in the USPTO will check the listing on the postcard against the item(s) being filed to be sure they are properly identified and that all the items listed on the postcard are presently being submitted to the USPTO. If any of the items listed on the postcard are not being submitted to the USPTO, those items will be crossed off and the post-card initialed by the person receiving the items. Upon return of a postcard receipt from the USPTO, the postcard receipt should be promptly reviewed by the person who filed the items to ensure that every item specifically denoted on the postcard was received by the USPTO. If the postcard receipt has been annotated to indicate that a particular item denoted on the postcard was not received by the USPTO, the postcard receipt will not serve as *prima facie* evidence of receipt of that item in the USPTO. (Emphasis supplied.)

- the date-stamped receipt card evidences–in pertinent part–the following:

* * *

> Receipt is hereby acknowledged for the following in the United States Patent and Trademark Office: Contents: *** Formal Drawings (1 pg) *** .

* * *

Because Petitioner's receipt card adequately itemized the contents of the application as to the drawing on the receipt card, it is concluded that the application, including 1 sheet of drawings ([Fig.] 1/1), as described in the specification, was deposited with the Office on 19 May, 2006, and Fig. 1/1, as described in the specification, subsequently was misplaced in the Office.

Accordingly, the application, including Fig. 1/1, as described in the specification, is entitled to a filing date of 19 May, 2006.

The Notice mailed on 8 June, 2006, was sent in error and is hereby **vacated** to the extent that it stated that the application was filed without drawings–that is, omitting Fig. 1/1, as described in the specification.

CONCLUSION

The petition is **granted** and the petition fee waived.

This application is released to OIPE for further processing with a filing date of 19 May, 2006, for the entire application including Fig. 1/1, as described in the specification, with pages 1 - 5 of the specification (description, abstract), and 1 sheet of drawings (Fig. 1/1), as described in the specification, using:

- **pages 1 - 5 of the specification (description, abstract) deposited on 19 May, 2006; and**

- **and 1 sheet of drawings, Fig. 1/1, as described in the specification and deposited on 16 June, 2006; and further**

with direction to OIPE to correct Office records and provide to Petitioner a corrected filing receipt setting forth a filing date of 19 May, 2006, and reflecting therein that 5 pages of specification (description, abstract) and 1 sheet of drawings (Fig. 1/1) were present on filing.

While telephone inquiries regarding this decision may be directed to the undersigned at (571) 272-3214, it is noted that all practice before the Office is in writing (see: 37 C.F.R. §1.2[2]) and the proper authority for action on any matter in this regard are the statutes (35 U.S.C.), regulations (37 C.F.R.) and the commentary on policy (MPEP). Therefore, no telephone discussion may be controlling or considered authority for Petitioner's action(s).

John J. Gillon, Jr.
Senior Attorney
Office of Petitions

[2] The regulations at 37 C.F.R. §1.2 provide:
§1.2 Business to be transacted in writing.
All business with the Patent and Trademark Office should be transacted in writing.The personal attendance of applicants or their attorneys or agents at the Patent and Trademark Office is unnecessary. The action of the Patent and Trademark Office will be based exclusively on the written record in the Office. No attention will be paid to any alleged oral promise, stipulation,or understanding in relation to which there is disagreement or doubt.

UNITED STATES PATENT AND TRADEMARK OFFICE

Commissioner for Patents
United States Patent and Trademark Office
P.O. Box 1450
Alexandria, VA 22313-1450
www.uspto.gov

John Wurst, Patent Counsel
Suite 825
4660 La Jolla Village Drive
San Diego CA 92212-4613

COPY MAILED

MAY 14 2007

OFFICE OF PETITIONS

In re Application of :
Weers et al. :
Application No. 60/802,339 : DECISION ON PETITION
Filed: 05/22/2006 :
Attorney Docket No. PROV.06-01 :

This is in response to the petition filed November 13, 2006 (certificate of mailing dated November 8, 2006).

On June 9, 2006, the Office mailed a Notice to File Missing Parts of a Provisional Application, stating that petitioner must submit a provisional application cover sheet, which identifies either the city and state or the city and foreign country of the residence of each inventor. On November 13, 2006, petitioner filed the present petition, a Statement of Facts Under 37 CFR 1.47, and a provisional application cover sheet. The provisional cover sheet indicates the residence of inventor Cindy Johnson as unknown. Petitioner stated that petitioner could not locate Ms. Johnson after diligent effort, and thus, her city and state could not be provided. Petitioner provided Ms. Johnson's last known address in the petition.

Pursuant to 37 CFR 1.51(c)(1), the cover sheet must state that it is for a provisional application, identify the residence of the inventor(s), and provide the title of the invention. The Office notes that ordinarily, the last known address will be the last known residence of the inventor. Therefore, petitioner should include the city and state of the last known address of Ms. Johnson on the provisional application cover sheet. The filing of a petition under 37 CFR 1.47 is inappropriate and is hereby **dismissed**.

The cover sheet may be filed with the Office of Initial Patent Examination without the need for a petition. This matter does **not** require any further review by the Office of Petitions.

Any inquiries related to this decision should be directed to the undersigned at (571) 272-3211.

C. T. Donnell

Christina Tartera Donnell
Senior Petitions Attorney
Office of Petitions

UNITED STATES PATENT AND TRADEMARK OFFICE

Commissioner for Patents
United States Patent and Trademark Office
P.O. Box 1450
Alexandria, VA 22313-1450
www.uspto.gov

KOLISCH HARTWELL, P.C.
200 PACIFIC BUILDING
520 SW YAMHILL STREET
PORTLAND OR 97204

COPY MAILED
NOV 22 2006
OFFICE OF PETITIONS

In re Application of :
Adams, et al. :
Application No. 60/802,602 :
Filed: May 24, 2006 :
Attorney Docket No. NPW 393P :
For: SELF-REGULATING FEEDSTOCK DELIVERY SYSTEMS AND HYDROGEN-GENERATING FUEL PROCESSING ASSEMBLIES AND FUEL CELL SYSTEMS INCORPORATING THE SAME

ON PETITION

This is a decision on the petition filed August 22, 2006 (certificate of mailing date August 18, 2006) under 37 CFR 1.10(d), requesting that the above-identified application be accorded a filing date of May 22, 2006, rather than the presently accorded filing date of May 24, 2006.

The petition under 37 CFR 1.10(d) is **GRANTED**.

Petitioners request the earlier filing date on the basis that the application was deposited in Express Mail service on May 22, 2006, pursuant to the requirements of 37 CFR 1.10. The petition is accompanied by a printout of the United States Postal Service Track/Confirm for the package associated with Express Mail label EV380368231US that shows the package was accepted by the USPS on May 22, 2006. The same Express Mail label number is found on the original application transmittal letter. It is noted the "date-in" on the Express Mail label in question is "5 24 06".

Paragraph (d) of 37 CFR 1.10 states that:

Any person filing correspondence under this section that was received by the Office and delivered by the "Express Mail Post Office to Addressee" service of the USPS, who can show that the "date-in" on the "Express Mail" mailing label or other official notation entered by the USPS was incorrectly entered or omitted by the USPS, may petition the Director to accord the correspondence a filing date as of the date the correspondence is shown to have been deposited with the USPS, provided that:

(1) The petition is filed promptly after the person becomes aware that the Office has accorded, or will accord, a filing date based upon an incorrect entry by the USPS;

(2) The number of the "Express Mail" mailing label was placed on the paper(s) or fee(s) that constitute the correspondence prior to the original mailing by "Express Mail"; and

(3) The petition includes a showing, which establishes to the satisfaction of the Director, that the requested filing date was the date the correspondence was deposited in "Express Mail Post Office to Addressee" service prior to the last scheduled pickup for that day. Any showing pursuant to this paragraph must be corroborated by evidence from the USPS or that came into being after deposit and within one business day of the deposit of the correspondence in the "Express Mail Post Office to Addressee" service of the USPS.

A grantable petition under 37 CFR 1.10(d) must include "a showing which establishes to the satisfaction of the Director that the requested filing date was the date the correspondence was deposited in "Express Mail Post Office to Addressee" service prior to the last scheduled pick-up for that day." In addition, the showing "must be corroborated by evidence from the USPS or that came into being after deposit and within one business day of the deposit of the correspondence in the 'Express Mail Post Office to Addressee' service of the USPS."

The petition filed August 22, 2006 (certificate of mailing date August 18, 2006), is accompanied by the corroborating evidence required by the rule. Accordingly, the petition is granted.

The $400.00 petition fee charged on August 23, 2006 will be credited to deposit account no. 11-1540.

The application is being returned to the Office of Initial Patent Examination for correction of the filing date to **May 22, 2006** and the mailing of a corrected filing receipt.

Any inquiries related to this decision should be directed to the undersigned at (571) 272-3230.

Shirene Willis Brantley
Senior Petitions Attorney
Office of Petitions

UNITED STATES PATENT AND TRADEMARK OFFICE

Commissioner for Patents
United States Patent and Trademark Office
P.O. Box 1450
Alexandria, VA 22313-1450
www.uspto.gov

KOLISCH HARTWELL, P.C.
200 PACIFIC BUILDING
520 SW YAMHILL STREET
PORTLAND OR 97204

COPY MAILED
APR 13 2007
OFFICE OF PETITIONS

In re Application of :
Beliveau, et al. :
Application No. 60/802,715 : ON PETITION
Filed: May 24, 2006 :
Attorney Docket No. NPW 392P :
For: HYDROGEN-PRODUCING FUEL PROCESSING SYSTEMS WITH A LIQUID LEAK DETECTION SYSTEM

This is a decision on the petition filed August 22, 2006 (certificate of mailing date August 18, 2006) under 37 CFR 1.10(d), requesting that the above-identified application be accorded a filing date of May 22, 2006, rather than the presently accorded filing date of May 24, 2006.

The petition under 37 CFR 1.10(d) is **GRANTED**.

Petitioners request the earlier filing date on the basis that the application was deposited in Express Mail service on May 22, 2006, pursuant to the requirements of 37 CFR 1.10. The petition is accompanied by a printout of the United States Postal Service Track/Confirm for the package associated with Express Mail label EV380368228US that shows the package was accepted by the USPS on May 22, 2006. The same Express Mail label number is found on the original Provisional Application for Patent Cover Sheet. It is noted the "date-in" on the Express Mail label in question is "5 24 06".

Paragraph (d) of 37 CFR 1.10 states that:

Any person filing correspondence under this section that was received by the Office and delivered by the "Express Mail Post Office to Addressee" service of the USPS, who can show that the "date-in" on the "Express Mail" mailing label or other official notation entered by the USPS was incorrectly entered or omitted by the USPS, may petition the Director to accord the correspondence a filing date as of the date the correspondence is shown to have been deposited with the USPS, provided that:

(1) The petition is filed promptly after the person becomes aware that the Office has accorded, or will accord, a filing date based upon an incorrect entry by the USPS;

(2) The number of the "Express Mail" mailing label was placed on the paper(s) or fee(s) that constitute the correspondence prior to the original mailing by "Express Mail"; and

(3) The petition includes a showing, which establishes to the satisfaction of the Director, that the requested filing date was the date the correspondence was deposited in "Express Mail Post Office to Addressee" service prior to the last scheduled pickup for that day. Any showing pursuant to this paragraph must be corroborated by evidence from the USPS or that came into being after deposit and within one business day of the deposit of the correspondence in the "Express Mail Post Office to Addressee" service of the USPS.

A grantable petition under 37 CFR 1.10(d) must include "a showing which establishes to the satisfaction of the Director that the requested filing date was the date the correspondence was deposited in "Express Mail Post Office to Addressee" service prior to the last scheduled pick-up for that day." In addition, the showing "must be corroborated by evidence from the USPS or that came into being after deposit and within one business day of the deposit of the correspondence in the 'Express Mail Post Office to Addressee' service of the USPS."

The petition filed August 22, 2006 (certificate of mailing date August 18, 2006), is accompanied by the corroborating evidence required by the rule. Accordingly, the petition is granted. Petitioners were charged a $400.00 petition fee on accounting date August 23, 2006. Pursuant to petitioners' request, this fee will be credited to deposit account no. 11-1540.

The application is being returned to the Office of Initial Patent Examination for correction of the filing date to **May 22, 2006** and the mailing of a corrected filing receipt.

Any inquiries related to this decision should be directed to the undersigned at (571) 272-3230.

Shirene Willis Brantley

Shirene Willis Brantley
Senior Petitions Attorney
Office of Petitions

UNITED STATES PATENT AND TRADEMARK OFFICE

Commissioner for Patents
United States Patent and Trademark Office
P.O. Box 1450
Alexandria, VA 22313-1450
www.uspto.gov

KOLISCH HARTWELL, P.C.
200 PACIFIC BUILDING
520 SW YAMHILL STREET
PORTLAND OR 97204

COPY MAILED

MAR 30 2007

OFFICE OF PETITIONS

In re Application of :
Pledger, et al. :
Application No. 60/802,716 :
Filed: May 24, 2006 :
Attorney Docket No. NPW 394P :
For: HYDROGEN-PRODUCING FUEL PROCESSING ASSEMBLIES AND MEMBRANE-BASED SEPARATION ASSEMBLIES FOR USE THEREWITH

ON PETITION

This is a decision on the petition filed July 17, 2006 (certificate of mailing date July 12, 2006) under 37 CFR 1.10(d), requesting that the above-identified application be accorded a filing date of May 22, 2006, rather than the presently accorded filing date of May 24, 2006.

The petition under 37 CFR 1.10(d) is **GRANTED**.

Petitioners request the earlier filing date on the basis that the application was deposited in Express Mail service on May 22, 2006, pursuant to the requirements of 37 CFR 1.10. The petition is accompanied by a printout of the United States Postal Service Track/Confirm for the package associated with Express Mail label EV380368262US that shows the package was accepted by the USPS on May 22, 2006. The same Express Mail label number is found on the Provisional Application for Patent Coversheet found in the application file. It is noted the "date-in" on the Express Mail label in question is "5 24 06".

Paragraph (d) of 37 CFR 1.10 states that:

Any person filing correspondence under this section that was received by the Office and delivered by the "Express Mail Post Office to Addressee" service of the USPS, who can show that the "date-in" on the "Express Mail" mailing label or other official notation entered by the USPS was incorrectly entered or omitted by the USPS, may petition the Director to accord the correspondence a filing date as of the date the correspondence is shown to have been deposited with the USPS, provided that:

(1) The petition is filed promptly after the person becomes aware that the Office has accorded, or will accord, a filing date based upon an incorrect entry by the USPS;

(2) The number of the "Express Mail" mailing label was placed on the paper(s) or fee(s) that constitute the correspondence prior to the original mailing by "Express Mail"; and

(3) The petition includes a showing, which establishes to the satisfaction of the Director, that the requested filing date was the date the correspondence was deposited in "Express Mail Post Office to Addressee" service prior to the last scheduled pickup for that day. Any showing pursuant to this paragraph must be corroborated by evidence from the USPS or that came into being after deposit and within one business day of the deposit of the correspondence in the "Express Mail Post Office to Addressee" service of the USPS.

A grantable petition under 37 CFR 1.10(d) must include "a showing which establishes to the satisfaction of the Director that the requested filing date was the date the correspondence was deposited in "Express Mail Post Office to Addressee" service prior to the last scheduled pick-up for that day." In addition, the showing "must be corroborated by evidence from the USPS or that came into being after deposit and within one business day of the deposit of the correspondence in the 'Express Mail Post Office to Addressee' service of the USPS."

The petition filed July 17, 2006 (certificate of mailing date July 12, 2006), is accompanied by the corroborating evidence required by the rule. Accordingly, the petition is granted. The $130.00 petition fee submitted with the present petition will be credited to deposit account no. 11-1540.

The application is being returned to the Office of Initial Patent Examination for correction of the filing date to **May 22, 2006** and the mailing of a corrected filing receipt.

Any inquiries related to this decision should be directed to the undersigned at (571) 272-3230.

Shirene Willis Brantley

Shirene Willis Brantley
Senior Petitions Attorney
Office of Petitions

UNITED STATES PATENT AND TRADEMARK OFFICE

Commissioner for Patents
United States Patent and Trademark Office
P.O. Box 1450
Alexandria, VA 22313-1450
www.uspto.gov

COPY MAILED
DEC 13 2006
OFFICE OF PETITIONS

LAHIVE & COCKFIELD, LLP
ONE POST OFFICE SQUARE
BOSTON, MA 02109-2127

In re Application of	:	
NO INVENTOR NAMED	:	
Application No. 60/802,858	:	DECISION GRANTING PETITION
Filed: May 22, 2006	:	
Attorney Docket No. BBI-245-1	:	

This is a decision on the petition filed September 21, 2006, under 37 CFR 1.10(c) requesting that the above-cited application be accorded a filing date of May 22, 2006, rather than the presently accorded filing date of May 23, 2006.

Petitioner alleges that the application was deposited with the Express Mail Service on May 22, 2006. In support of the allegation, the petition is accompanied by a copy of the Express Mail receipt with a tracking number EV681302314US showing a "date-in" of May 22, 2006. The tracking number cited is the same number found on the application transmittal sheet that accompanied the original application papers. The evidence is convincing that the application papers were deposited on May 22, 2006.

In view of the above, the petition is granted. The new filing date for the above-cited application is May 22, 2006.

The Office of Initial Patent Examination will further process the application with a filing date of May 22, 2006, and issue a corrected filing receipt.

Any inquiries related to this decision should be directed to the undersigned at (571)272-3222.

Kenya A. McLaughlin
Petitions Attorney
Office of Petitions

UNITED STATES PATENT AND TRADEMARK OFFICE

Commissioner for Patents
United States Patent and Trademark Office
P.O. Box 1450
Alexandria, VA 22313-1450
www.uspto.gov

CHRISTENSEN, O'CONNOR, JOHNSON, KINDNESS, PLLC
1420 FIFTH AVENUE
SUITE 2800
SEATTLE, WA 98101-2347

COPY MAILED

AUG 0 1 2006

OFFICE OF PETITIONS

In re Application of	:	
Pudipeddi, et al.	:	
Filed: May 23, 2006	:	ON PETITION
Application No. 60/802,922	:	
Atty. Dkt. No.: MSFT127607	:	

This decision is in response to the petition to accorded the above-identified application a filing date of June 27, 2006, 2006 with six sheets of drawings as part of the original application as filed.

The application was filed May 23, 2006. A Notice of Incomplete Provisional Application (Notice) was mailed June 12, 2006 and indicated that the application had not been accorded a filing date because the application appeared to have been submitted out drawings in accordance with 35 USC 113.

In response, the petitioners herein argue that the application as deposited included six sheets of drawings and have presented as proof of mailing and proof of receipt of the six sheets of drawings a date stamped return postcard. A copy of the six sheets of drawings purportedly filed with the application on May 23, 2006 was submitted herewith.

The original six sheets of drawings have not been located. However, in view of the evidence presented, the petition to accord the application a filing date of May 23, 2006 is GRANTED.

Since the original six sheets of drawings cannot be located in the Office, the copy submitted herewith will be used for examination purposes.

No petition fee is due in connection with this matter. A refund has been requested on behalf of petitioner.

This application will be returned to the Office of Initial Patent Examination for further processing with a filing date of May 23, 2006.

Telephone inquiries related to this decision may be directed to the undersigned at (571) 272-3205.

Alesia M. Brown
Petitions Attorney
Office of Petitions

UNITED STATES PATENT AND TRADEMARK OFFICE

Commissioner for Patents
United States Patent and Trademark Office
P.O. Box 1450
Alexandria, VA 22313-1450
www.uspto.gov

BROWDY AND NEIMARK, P.L.L.C.
624 NINTH STREET, NW
SUITE 300
WASHINGTON DC 20001-5303

COPY MAILED
MAR 06 2007
OFFICE OF PETITIONS

In re Application of	:	
Zaban et al.	:	
Application No. 60/803,390	:	ON PETITION
Filing or 371(c) Date: 05/30/2006	:	
Title of Invention:	:	
SOLAR CELLS ARRANGEMENT	:	

This Decision is in response to a "Petition and Response to Notice of Omitted Item(s) in a Nonprovisional Application", filed November 1, 2006, requesting that the application be accorded a filing date of May 30, 2006, including Figures 6A, 6B and 7.

Background

Application papers in the above-identified application were filed on May 30, 2006. This Office mailed a Notice of Omitted Item(s) in a Nonprovisional Application (Notice) on September 1, 2006, informing Applicant that the a filing date had been accorded the application; however, Figures 6A, 6B and 7 described in the specification appeared to have been omitted from the application.

The present petition

In response to the Notice, Applicant files the present petition and avers that drawing Figures 6A, 6B and 7were included among 11 sheets of drawings filed with the application on May 30, 2006. In support of this assertion, Applicant files a copy of his return-receipt postcard.

Applicant's return receipt postcard

A review of the postcard reveals that this Office acknowledged receipt of 11 pages of drawings[1], in the above-identified application on May 30, 2006.

[1] This Office received 11 sheets of drawings. The drawing sheets did not contain page numbers.

The application file

A review of the application file reveals that this Office received 11 sheets of drawings, including

Sheet 1:	Figures 1 and 2
Sheet 2:	Figures 3A and 3B
Sheet 3:	Figure 3C
Sheet 4:	Figures 4 and 5
Sheet 5:	Labeled Figures 6A, 6B and 7, **but no Figures are present on the page**.
Sheet 6:	Figures 8A and 8B
Sheet 7:	Figures 9 and 10
Sheet 8:	Figures 11A, 11B, 11C, 12A and 12B
Sheet 9:	Figures 13 and 14
Sheet 10:	Figure 15
Sheet 11:	Figure 16

(Emphasis supplied)

Applicant is advised that this Office received 11 pages of drawings as annotated on the Acknowledgment Receipt; however, the page containing the labels for Figures 6A, 6B and 7 do not include any Figures.

The USPTO file is the official record of the papers actually received or filed. In this instance, Applicant filed, and this Office received, 11 sheets of drawings. However, Applicant has failed to demonstrate that Figures 6A, 6B and 7 were present in this Office on May 30, 2006.

Applicant may attempt entry of the drawing Figures by was of preliminary amendment. The issue of new matter is appropriately addressed by the Examiner.

Further correspondence with respect to this matter should be addressed as follows:

By mail:	Commissioner for Patents PO Box 1450 Alexandria, VA 22313-1450
By FAX:	(571) 273-8300 Attn: Office of Petitions
By hand:	Customer Service Window Randolph Building 401 Dulany Street Alexandria, VA 22314

Telephone inquiries concerning this matter should be directed to the undersigned at (571) 272-3232.

Derek L. Woods
Attorney
Office of Petitions

UNITED STATES PATENT AND TRADEMARK OFFICE

Commissioner for Patents
United States Patent and Trademark Office
P.O. Box 1450
Alexandria, VA 22313-1450
www.uspto.gov

ADE & COMPANY INC.
2157 Henderson Highway
WINNIPEG MB R2G1P-9 CA
CANADA

COPY MAILED

FEB 19 2008

In re Application of	:	
Melvin	:	
Application No. 60/804,106	:	DECISION
Filed: 25 July, 2002	:	
Attorney Docket No. 57084-C	:	

This is a decision on the petition filed on 6 March, 2007, to revive an application under 37 C.F.R. §1.137(b) as having been abandoned due to unintentional delay.

The Office regrets the delay in addressing the instant matter, however, the petition was presented to the attorneys in the Office of Petitions only at this writing.

The petition as considered under 37 C.F.R. §1.137(b) is **GRANTED**.

BACKGROUND

The record reflects that:

- Petitioner failed to reply timely and properly to the Notice to File Missing Parts mailed on 9 June, 2006, with reply due under a non-extendable deadline on or before 9 August, 2006;
- the application went abandoned by operation of law after midnight 9 August, 2006;
- the Office mailed the Notice of Abandonment on 26 February, 2007;

- on 6 March, 2007, Petitioner submitted the instant petition with fee, the reply in the form of the surcharge and application data sheet (ADS), and made the statement of unintentional delay—notably, while the filer of the application appears to have been Adrian Battison (Reg. No. 31,726) and the Petitioner herein is Ryan Dupuis (Reg. No. 47,345), both agents are and have been associated with the Customer No. 23,529, which number is associated with the mailing address herein, and for that reason Petitioner's averment as to the nature of the delay herein has been accepted—however, if that is not Petitioner's appreciation of the facts herein, Petitioner is placed on notice that he must so inform the Office without delay in conformance with Petitioner's duty of candor to the Office.

The availability of applications and application papers online to applicants/practitioners who diligently associate their Customer Number with the respective application(s) now provides an applicant/practitioner on-demand information as to events/transactions in an application.

Out of an abundance of caution, Petitioners always should note that those registered to practice *and* all others who make representations before the Office are reminded to inquire into the underlying facts of representations made to the Office and support averments with the appropriate documentation–since all owe to the Office the continuing duty to disclose.[1]

STATUTES, REGULATIONS AND ANALYSIS

Congress has authorized the Commissioner to "revive an application if the delay is shown to the satisfaction of the Commissioner to have been "unavoidable." 35 U.S.C. §133 (1994).[2]

The regulations at 37 C.F.R. §1.137(a) and (b) set forth the requirements for a petitioner to revive a previously unavoidably or unintentionally, respectively, abandoned application under this congressional grant of authority. The language of 35 U.S.C. §133 and 37 C.F.R. §1.137(a) is clear, unambiguous, and without qualification: the delay in tendering the reply to the outstanding Office action, as well as filing the first petition seeking revival, must have been unavoidable for the reply now to be accepted on petition.

Delays in responding properly raise the question whether delays are unavoidable. Where there is a question whether the delay was unavoidable, Petitioners must meet the burden of establishing that the delay was unavoidable within the meaning of 35 U.S.C. §133 and 37 C.F.R. §1.137(a).[3]

And the Petitioner must be diligent in attending to the matter.[4] Failure to do so does not constitute the care required under Pratt, and so cannot satisfy the test for diligence and due care.

---

[1] See supplement of 17 June, 1999. The Patent and Trademark Office is relying on petitioner's duty of candor and good faith and accepting a statement made by Petitioner. See Changes to Patent Practice and Procedure, 62 Fed. Reg. at 53160 and 53178, 1203 Off. Gaz. Pat. Office at 88 and 103 (responses to comments 64 and 109)(applicant obligated under 37 C.F.R. §10.18 to inquire into the underlying facts and circumstances when providing statements to the Patent and Trademark Office).

[2] See: In re Application of G, 11 USPQ2d 1378, 1380 (Comm'r Pats. 1989).

[3] See: *Changes to Patent Practice and Procedure*; *Final Rule Notice*, 62 *Fed. Reg.* at 53158-59 (October 10, 1997), 1203 *Off. Gaz. Pat. Office* at 86-87 (October 21, 1997).

(By contrast, unintentional delays are those that do not satisfy the very strict statutory and regulatory requirements of unavoidable delay, and also, by definition, are not intentional.[5]))

As to Allegations
of Unintentional Delay

The requirements for a grantable petition under 37 C.F.R. §1.137(b) are the petition and fee, a proper reply, a statement/showing of unintentional delay, and–where appropriate—a terminal disclaimer and fee.

Petitioner appears to have satisfied the requirements under the regulation.

CONCLUSION

The instant petition under 37 C.F.R. §1.137(b) is **granted**.

The instant application is released to IFW storage.

While telephone inquiries regarding this decision may be directed to the undersigned at (571) 272-3214, it is noted that all practice before the Office is in writing (see: 37 C.F.R. §1.2[6]) and the proper authority for action on any matter in this regard are the statutes (35 U.S.C.), regulations (37 C.F.R.) and the commentary on policy (MPEP). Therefore, no telephone discussion may be controlling or considered authority for Petitioner's action(s).

John J. Gillon, Jr.
Senior Attorney
Office of Petitions

---

[4] See: Diligence in Filing Petitions to Revive and Petitions to Withdraw the Holding of Abandonment, 1124 Off. Gaz. Pat. Office 33 (March 19, 1991). It was and is Petitioner's burden to exercise diligence in seeking either to have the holding of abandonment withdrawn or the application revived. See 1124 Off. Gaz. Pat. Office supra.

[5] Therefore, by example, an unintentional delay in the reply might occur if the reply and transmittal form are to be prepared for shipment by the US Postal Service, but other pressing matters distract one's attention and the mail is not timely deposited for shipment.

[6] The regulations at 37 C.F.R. §1.2 provide:

§1.2 Business to be transacted in writing.
All business with the Patent and Trademark Office should be transacted in writing. The personal attendance of applicants or their attorneys or agents at the Patent and Trademark Office is unnecessary. The action of the Patent and Trademark Office will be based exclusively on the written record in the Office. No attention will be paid to any alleged oral promise, stipulation, or understanding in relation to which there is disagreement or doubt.

UNITED STATES PATENT AND TRADEMARK OFFICE

Commissioner for Patents
United States Patent and Trademark Office
P.O. Box 1450
Alexandria, VA 22313-1450
www.uspto.gov

JULIE ARCURI
791 BONITA AVE.
ELK GROVE VILLAGE, IL 60007

COPY MAILED

JUL 18 2008

In re Application of	:	
Arcuri, Julie	:	
Application No. 60/804,339	:	ON PETITION
Filed: June 9, 2006	:	
Title: BEER TENDER	:	

This is a decision on the petition under 37 C.F.R. § 1.137(b), filed April 9, 2007, April 16, 2007 and May 10, 2007, to revive the above-identified application.

The petition is **DISMISSED**.

The rules and statutory provisions governing the operations of the U.S. Patent and Trademark Office require payment of a fee on filing each petition to revive an abandoned application for patent based on unintentional delay or to accept an unintentionally delayed payment of a fee for issuing a patent. In this instance, the fee required by law is $1,540.00. If applicant can qualify as a "small entity" and does so prior to or together with the payment of the fee, the fee will be one-half of the amount indicated. See 37 CFR 1.27.

The petition in the above-identified application was not accompanied by payment of the required fee. No consideration on the merits can be given to the petition until the required fee is received.

Further correspondence with respect to this matter should be addressed as follows:

By mail: Mail Stop PETITIONS
Commissioner for Patents
Post Office Box 1450
Alexandria, VA 22313-1450

By hand: Customer Window located at:

U.S. Patent and Trademark Office
Customer Service Window Randolph Building
401 Dulany Street
Alexandria, VA 22314

By fax: (571) 273-8300
ATTN: Office of Petitions

Any questions concerning this matter may be directed to the undersigned at (571) 272-3206.

Liana Walsh
Petitions Examiner
Office of Petitions

UNITED STATES PATENT AND TRADEMARK OFFICE

Commissioner for Patents
United States Patent and Trademark Office
P.O. Box 1450
Alexandria, VA 22313-1450
www.uspto.gov

NOVAK DRUCE & QUIGG, LLP
1300 EYE STREET NW
SUITE 1000 WEST TOWER
WASHINGTON DC 20005

COPY MAILED

APR 26 2007

OFFICE OF PETITIONS

In re Application of	:
Trent Victor	:
Application No. 60/804,444	: DECISION GRANTING PETITION
Filed: June 11, 2006	: UNDER 37 CFR 1.137(b)
Attorney Docket No. 7589.346.PZUS00	:

This is a decision on the petition under 37 CFR 1.137(b), filed January 22, 2007, to revive the above-identified application.

The petition is **GRANTED**.

The petition satisfies the conditions for revival pursuant to the provisions of 37 CFR 1.137(b) in that (1) the reply in the form of an provisional application for patent cover sheet and the required fees; (2) the petition fee; and (3) the required statement of unintentional delay have been received. Accordingly, the reply to the Notice To File Missing Parts Of Provisional Application of June 16, 2006, is accepted as having been unintentionally delayed.

Telephone inquiries concerning this decision should be directed to the undersigned at (571) 272-3208.

This matter is being referred to the Office of Initial Patent Examination.

Karen Creasy

Karen Creasy
Petitions Examiner
Office of Petitions

UNITED STATES PATENT AND TRADEMARK OFFICE

Commissioner for Patents
United States Patent and Trademark Office
P.O. Box 1450
Alexandria, VA 22313-1450
www.uspto.gov

NOVAK DRUCE & QUIGG, LLP
1300 EYE STREET NW
SUITE 1000 WEST TOWER
WASHINGTON DC 20005

COPY MAILED

APR 26 2007

OFFICE OF PETITIONS

In re Application of	:	
Agneta Sjogren et al	:	
Application No. 60/804,445	:	DECISION GRANTING PETITION
Filed: June 11, 2006	:	UNDER 37 CFR 1.137(b)
Attorney Docket No. 7589.347.PZUS00	:	

This is a decision on the petition under 37 CFR 1.137(b), filed January 22, 2007, to revive the above-identified application.

The petition is **GRANTED**.

The petition satisfies the conditions for revival pursuant to the provisions of 37 CFR 1.137(b) in that (1) the reply in the form of an provisional application for patent cover sheet, and the required fees; (2) the petition fee; and (3) the required statement of unintentional delay have been received. Accordingly, the reply to the Notice To File Missing Parts Of Provisional Application of June 16, 2006, is accepted as having been unintentionally delayed.

Telephone inquiries concerning this decision should be directed to the undersigned at (571) 272-3208.

This matter is being referred to the Office of Initial Patent Examination.

Karen Creasy

Karen Creasy
Petitions Examiner
Office of Petitions

UNITED STATES PATENT AND TRADEMARK OFFICE

Commissioner for Patents
United States Patent and Trademark Office
P.O. Box 1450
Alexandria, VA 22313-1450
www.uspto.gov

HOVEY WILLIAMS LLP
2405 GRAND BLVD., SUITE 400
KANSAS CITY, MO 64108

COPY MAILED

NOV 06 2006

OFFICE OF PETITIONS

In re Application of	:	
Ding, et al.	:	
Application No. 60/804,876	:	ON PETITION
Filed: June 15, 2006	:	
Attorney Docket No. 37375-PRO	:	

This is a decision on the petition under 37 CFR 1.182(a), filed July 12, 2006, to correct the name of the first named joint inventor.

The petition is **GRANTED.**

A corrected filing receipt is enclosed.

Telephone inquiries concerning this matter may be directed to the undersigned at (571) 272-3222.

Kenya A. McLaughlin
Petitions Attorney
Office of Petitions

Enclosure: Corrected Filing Receipt

UNITED STATES PATENT AND TRADEMARK OFFICE

UNITED STATES DEPARTMENT OF COMMERCE
United States Patent and Trademark Office
Address: COMMISSIONER FOR PATENTS
P.O. Box 1450
Alexandria, Virginia 22313-1450
www.uspto.gov

APPL NO.	FILING OR 371 (c) DATE	ART UNIT	FIL FEE REC'D	ATTY.DOCKET NO	DRAWINGS	TOT CLMS	IND CLMS
60/804,876	06/15/2006		200	37375-PRO			

CONFIRMATION NO. 7446

CORRECTED FILING RECEIPT

OC000000021068667

23589
HOVEY WILLIAMS LLP
2405 GRAND BLVD., SUITE 400
KANSAS CITY, MO 64108

Date Mailed: 11/01/2006

Receipt is acknowledged of this provisional Patent Application. It will not be examined for patentability and will become abandoned not later than twelve months after its filing date. Be sure to provide the U.S. APPLICATION NUMBER, FILING DATE, NAME OF APPLICANT, and TITLE OF INVENTION when inquiring about this application. Fees transmitted by check or draft are subject to collection. Please verify the accuracy of the data presented on this receipt. **If an error is noted on this Filing Receipt, please mail to the Commissioner for Patents P.O. Box 1450 Alexandria Va 22313-1450. Please provide a copy of this Filing Receipt with the changes noted thereon. If you received a "Notice to File Missing Parts" for this application, please submit any corrections to this Filing Receipt with your reply to the Notice. When the USPTO processes the reply to the Notice, the USPTO will generate another Filing Receipt incorporating the requested corrections (if appropriate).**

Applicant(s)

Beijing Ding, Kansas City, MO;
Darin Stephens, Independence, MO;

Power of Attorney:

Thomas Luebbering--37874

If Required, Foreign Filing License Granted: 06/22/2006

The country code and number of your priority application, to be used for filing abroad under the Paris Convention, is US60/804,876

Projected Publication Date: None, application is not eligible for pre-grant publication

Non-Publication Request: Not applicable

Early-Publication Request: Not applicable

Title

Trail Camera with Automatic Daytime/Nighttime Feature

PROTECTING YOUR INVENTION OUTSIDE THE UNITED STATES

Since the rights granted by a U.S. patent extend only throughout the territory of the United States and have no effect in a foreign country, an inventor who wishes patent protection in another country must apply for a patent in a specific country or in regional patent offices. Applicants may wish to consider the filing of an international application under the Patent Cooperation Treaty (PCT). An international (PCT) application generally has the same effect as a regular national patent application in each PCT-member country. The PCT process **simplifies** the filing of patent applications on the same invention in member countries, but **does not result** in a grant of "an international patent" and does not eliminate the need of applicants to file additional documents and fees in countries where patent protection is desired.

Almost every country has its own patent law, and a person desiring a patent in a particular country must make an application for patent in that country in accordance with its particular laws. Since the laws of many countries differ in various respects from the patent law of the United States, applicants are advised to seek guidance from specific foreign countries to ensure that patent rights are not lost prematurely.

Applicants also are advised that in the case of inventions made in the United States, the Director of the USPTO must issue a license before applicants can apply for a patent in a foreign country. The filing of a U.S. patent application serves as a request for a foreign filing license. The application's filing receipt contains further information and guidance as to the status of applicant's license for foreign filing.

Applicants may wish to consult the USPTO booklet, "General Information Concerning Patents" (specifically, the section entitled "Treaties and Foreign Patents") for more information on timeframes and deadlines for filing foreign patent applications. The guide is available either by contacting the USPTO Contact Center at 800-786-9199, or it can be viewed on the USPTO website at http://www.uspto.gov/web/offices/pac/doc/general/index.html.

For information on preventing theft of your intellectual property (patents, trademarks and copyrights), you may wish to consult the U.S. Government website, http://www.stopfakes.gov. Part of a Department of Commerce initiative, this website includes self-help "toolkits" giving innovators guidance on how to protect intellectual property in specific countries such as China, Korea and Mexico. For questions regarding patent enforcement issues, applicants may call the U.S. Government hotline at 1-866-999-HALT (1-866-999-4158).

LICENSE FOR FOREIGN FILING UNDER
Title 35, United States Code, Section 184
Title 37, Code of Federal Regulations, 5.11 & 5.15

GRANTED

The applicant has been granted a license under 35 U.S.C. 184, if the phrase "IF REQUIRED, FOREIGN FILING LICENSE GRANTED" followed by a date appears on this form. Such licenses are issued in all applications where the conditions for issuance of a license have been met, regardless of whether or not a license may be required as set forth in 37 CFR 5.15. The scope and limitations of this license are set forth in 37 CFR 5.15(a) unless an earlier license has been issued under 37 CFR 5.15(b). The license is subject to revocation upon written notification. The date indicated is the effective date of the license, unless an earlier license of similar scope has been granted under 37 CFR 5.13 or 5.14.

This license is to be retained by the licensee and may be used at any time on or after the effective date thereof unless it is revoked. This license is automatically transferred to any related applications(s) filed under 37 CFR 1.53(d). This license is not retroactive.

The grant of a license does not in any way lessen the responsibility of a licensee for the security of the subject matter as imposed by any Government contract or the provisions of existing laws relating to espionage and the national security or the export of technical data. Licensees should apprise themselves of current regulations especially with respect to certain countries, of other agencies, particularly the Office of Defense Trade Controls, Department of State (with respect to Arms, Munitions and Implements of War (22 CFR 121-128)); the Bureau of Industry and Security, Department of Commerce (15 CFR parts 730-774); the Office of Foreign Assets Control, Department of Treasury (31 CFR Parts 500+) and the Department of Energy.

NOT GRANTED

No license under 35 U.S.C. 184 has been granted at this time, if the phrase "IF REQUIRED, FOREIGN FILING LICENSE GRANTED" DOES NOT appear on this form. Applicant may still petition for a license under 37 CFR 5.12, if a license is desired before the expiration of 6 months from the filing date of the application. If 6 months has lapsed from the filing date of this application and the licensee has not received any indication of a secrecy order under 35 U.S.C. 181, the licensee may foreign file the application pursuant to 37 CFR 5.15(b).

UNITED STATES PATENT AND TRADEMARK OFFICE

Commissioner for Patents
United States Patent and Trademark Office
P.O. Box 1450
Alexandria, VA 22313-1450
www.uspto.gov

COPY MAILED
SEP 15 2006
OFFICE OF PETITIONS

NEAL, GERBER, & EISENBERG
SUITE 2200
2 NORTH LASALLE STREET
CHICAGO, IL 60602

In re Application of	:	
Snediker, et al.	:	
Application No. 60/804,959	:	ON PETITION
Filed: June 16, 2006	:	
Attorney Docket No.: 017074.01US1	:	

This is a decision on the petition under 37 CFR 1.182, filed July 10, 2006, requesting that the above-identified application retain the presently accorded filing date with the alleged omitted figures including as part of the original disclosure.

The petition is **dismissed**.

On June 16, 2006, the above-identified application was filed. However, on June 21, 2006, the Office of Initial Patent Examination mailed a "Notice of Omitted Items of Provisional Application", stating that application had been accorded a filing date of June 16, 2006, and advising applicant that Figures 9-12, 18-20, 25-34, and Figure 44 as described in the specification appeared to have been omitted.

In response, on July 10, 2006, applicant filed the present petition. Applicant supplies the omitted figures and request that the application be amended to include the figures as part of the original disclosure.

Petitioner's attention is directed to section 601.01(b) of the *Manual of Patent Examining Procedure* (MPEP) which states, in pertinent part:

> [a] provisional application will be given a filing date in accordance with 37 CFR 1.53(c) as of the date the written description and any necessary drawings are filed in the Office. The filing date requirements for a provisional application sent forth the 37 CFR 1.53(c) parallel the requirements of a nonprovisional application set forth in 37 CFR 1.53(b), except that no claim is required. Amendments, other than those required to make the provisional application comply with applicable regulations, are not permitted after the filing date of the provisional application.

Further, section 601.01(d) of the MPEP provides that:

> . . . in view of the relatively low filing fee for provisional applications, and the USPTO's desire to minimize the processing of provisional application, the USPTO will not grant petition under 37 CFR 1.182 to accept omitted page(s) or drawing(s) and accord an application filing date as of the date of such submission in provisional applications. The applicant should simply file a new completed provisional application.

The petition is dismissed, accordingly. The instant provisional application will retain the filing date of June 16, 2006, with only those papers filed on that date. The figures supplied on July 10, 2006, will not be included in the disclosure.

Deposit Account 50-2261 will be charged $400.00 for the instant petition fee.

The application is file is being directed to the Office of Initial Patent Examination for further processing.

Telephone inquiries concerning this decision may be directed to the undersigned at (571) 272-3222.

Kenya A. McLaughlin
Petitions Attorney
Office of Petitions

UNITED STATES PATENT AND TRADEMARK OFFICE

Commissioner for Patents
United States Patent and Trademark Office
P.O. Box 1450
Alexandria, VA 22313-1450
www.uspto.gov
DIW Sep-08

PETER A. HAAS, ESQUIRE
1929 SW 13TH AVENUE
PORTLAND OR 97201

COPY MAILED
SEP 10 2008

In re Application of	:	
Clarke McAllister	:	
Application Number: 60/805777	:	ON PETITION
Filing Date: July 11, 2008	:	
Attorney Docket Number: ADA-06-PROV-05	:	

This is a decision on the petition filed on July 11, 2008, which is treated as a petition under 37 CFR 1.53 to accord the application a filing date of June 26, 2006.

The petition is dismissed.

The application was transmitted via the USPTO's Electronic Filing System (EFS) on June 26, 2006. The application documents transmitted on June 26, 2006, consisted of two (2) pages of an N417 Electronic Patent Application Fee Transmittal, including the provisional application filing fee.

Accordingly, on July 7, 2008, the Office of Patent Application Processing mailed a Notice of Incomplete Provisional Application, stating that the application had not been accorded a filing date because the application had been deposited without a specification. The Notice stated that the application would be accorded a filing date as of the date of the receipt of the missing specification. A provisional application cover sheet was also required.

On July 11, 2007, 35 pages of specification, including five (5) pages containing claims, one (1) page of abstract, 12 sheets of drawings, and a Provisional Application for Patent Cover Sheet were filed, along with the present petition and petition fee.

Petitioner asserts that the specification and drawings were filed via EFS-Web on "26 June 2008" (*sic*). It appears that petitioner is asserting that a complete application was filed on June 26, 2006. In support, petitioner has submitted a copy of the Electronic Acknowledgement Receipt showing receipt of 2 pages of Fee Worksheet (PTO-875) on June 26, 2006.

Petitioner's argument has been considered, but is not persuasive.

A review of the electronic acknowledgement receipt located in the original file indicates that only 2 pages of the PTO-875 Fee Worksheet were received on June 26, 2006. No other documents, or pages, are listed on the acknowledgement receipt.

Petitioner has presented no evidence that the specification for the subject application was filed on June 26, 2006, or on any date prior to July 11, 2008. On July 11, 2008, the specification was received. As such, the application will be accorded a filing date of July 11, 2008.

In the absence of convincing evidence that the specification was filed on June 26, 2006, the petition must be dismissed.

The "Notice" mailed on July 11, 2008, was correct in stating that the specification was missing. Therefore, the "Notice" was properly mailed and will not be withdrawn.

The present petition was not necessitated by any error on the part of the Office and the $400.00 petition was required upon filing and will not be refunded.

Further correspondence with respect to this matter should be addressed as follows:

By mail: Mail Stop Petition
Commissioner for Patents
P.O. Box 1450
Alexandria, VA 22313-1450

By FAX: (571) 273-8300
Attn: Office of Petitions

By hand: Customer Service Window
Mail Stop Petition
Randolph Building
401 Dulany Street
Alexandria, VA 22314

Telephone inquiries specific to this matter should be directed to the undersigned at 571 272-3231.

D Wood

Douglas I. Wood
Senior Petitions Attorney
Office of Petitions

UNITED STATES PATENT AND TRADEMARK OFFICE

Commissioner for Patents
United States Patent and Trademark Office
P.O. Box 1450
Alexandria, VA 22313-1450
www.uspto.gov

COOLEY GODWARD KRONISH LLP
3000 EL CAMINO REAL
5 PALO ALTO SQUARE
PALO ALTO CA 94306

COPY MAILED

APR 13 2007

OFFICE OF PETITIONS

In re Application of :
Adler et al. :
Application No. 60/805830 : ON PETITION
Filed: September 5, 2006 :
Attorney Docket No. CHUM-001/00US :

This is a decision on the petition filed September 20, 2006, requesting that the above-identified application be accorded a filing date of June 26, 2006, instead of the present filing date of September 5, 2006.

On June 26, 2006, applicants deposited that above-identified application. On July 21, 2006, the Office of Initial Patent Examination mailed a Notice of Incomplete Provisional Application, stating that the application had not been accorded a filing date as the application was deposited without a specification. The Notice also stated a provisional application cover sheet under 37 CFR 1.51(c)(1), or an application data sheet (37 CFR 1.76), identifying either city and state or city and foreign country of the residence of each inventor and the names of the inventors was required. The Notice indicated that the filing date would be the date of receipt of the required item(s) and that any assertion that the item(s) were submitted, or not necessary for a filing date, must be made by way of a petition accompanied by a fee.

On September 5, 2006, applicants filed 40 pages of specification; 30 sheets of drawings; an Acknowledgement Receipt; a Provisional Application Cover Sheet; and an authorization to charge any necessary fees to the Deposit Account. Thereafter, the Office accorded the provisional application a filing date of September 5, 2006, the date of receipt of the required items.

On September 20, 2006, applicants filed the present petition. In support of their assertion, applicants provided the Office with copies of the specification, Provisional Application Cover Sheet, and Acknowledgement Receipt for Patent Electronic Filing, and the Statement of Rula Lopez an assistant with the law firm, who electronically filed the application on behalf of Kevin Zimmer. Applicants asserted they electronically deposited the documents necessary to obtain a serial number

and filing date, including the specification, with the USPTO via "EFS-Web" on June 26, 2006. Applicants averred that the specification was electronically deposited with the Office on June 26, 2006 via the "EFS-Web" process.

Specifically, applicants argued:

> The Acknowledgement Receipt was generated after the specification for the above-identified application had been electronically submitted in accordance with the procedures outlined on the USPTO web site and did not indicate any error in acceptance/transmission of the specification (see attached STATEMENT of Exhibit C). Moreover, the Acknowledgement Receipt of Exhibit B provides further indicia of apparently successful electronic filing of the above-identified application in the form an EFS ID (i.e., "1092433"), Application Number (i.e., "60805830"), Confirmation Number (i.e., "1022"), Receipt Date (i.e., "26-JUN-2006") and Application Type ("Provisional"), all of which indicate successful deposit of the above-identified application via the EFS-Web process.

As stated in the Legal Framework for EFS-Web,[1] the Acknowledgement Receipt establishes the date of receipt by the USPTO of the electronic documents itemized in the receipt. The Acknowledgement Receipt contains a full listing of the documents submitted to the USPTO as described by applicant during the submission process, including the count of pages and/or byte sizes for each document. Thus, the Acknowledgement Receipt is the electronic equivalent of the postcard receipt described in MPEP 503.

The official filing date is noted on the Filing Receipt, after the submitted application parts are reviewed for compliance with 35 U.S.C. 111 and based on the dates indicated on the Acknowledgement Receipt, assuming that after review, the documents submitted are found to be entitled to an application filing date. The Office notes that the Acknowledgement Receipt only indicates that the Office received what was actually sent, as opposed to what an applicant may have intended to transmit.

"The filing date of a provisional application shall be the date on which the specification and any required drawing are **received in the Patent and Trademark Office**." 35 U.S.C. 111(b)(4) (emphasis added). Therefore, the date of filing of an application officially submitted through EFS-Web is the date in the Eastern Standard Time zone at the time of submission. As such, the submission's "date of receipt," as shown on the Acknowledgement Receipt, is the Eastern Standard Time date that the documents are fully, successfully, and officially received at the USPTO. This date is controlling for filing date purposes of a newly filed application.

After considering applicants' assertions and supporting documents, and consulting with the Electronic Business Center, the Office does not find the arguments persuasive. The Office file is the official record of the papers originally filed in this application. The Acknowledgement Receipt of June 26,

---

[1] "The Legal Framework provides guidance on the background statutes, regulations and policies that support the Electronic Filing System – Web (EFS-Web) project."

2006, supports the USPTO's records that applicants submitted only a fee sheet and paid a fee on that date. No other application papers were received in the USPTO on June 26, 2006. Therefore, the Notice of Incomplete was proper. Additionally, the provisional application is entitled to the date on which the specification and any required drawing are received in the USPTO (i.e. September 5, 2006.)

Accordingly, the petition is **dismissed**. Any request for reconsideration should be filed within TWO (2) MONTHS of the date of this decision in order to be considered timely. 37 CFR 1.181(f). This time period may not be extended pursuant to 37 CFR 1.136.

Further correspondence with respect to this matter should be addressed as follows:

By mail: Mail Stop Petition
Commissioner for Patents
P.O. Box 1450
Alexandria, VA 22313-1450

By FAX: (571) 273-8300
Attn: Office of Petitions

By hand: Customer Service Window
Randolph Building
401 Dulany Street
Alexandria, VA 22314

Any inquiries related to this decision should be directed to the undersigned at (571) 272-3211.

Christina Tartera Donnell

Christina Tartera Donnell
Senior Petitions Attorney
Office of Petitions

UNITED STATES PATENT AND TRADEMARK OFFICE

Commissioner for Patents
United States Patent and Trademark Office
P.O. Box 1450
Alexandria, VA 22313-1450
www.uspto.gov

COOLEY GODWARD KRONISH LLP
3000 EL CAMINO REAL
5 PALO ALTO SQUARE
PALO ALTO CA 94306

COPY MAILED

SEP 28 2007

OFFICE OF PETITIONS

In re Application of	:	
Adler et al.	:	
Application No. 60/805830	:	ON PETITION
Filed: September 5, 2006	:	
Attorney Docket No. CHUM-001/00US	:	

This is a decision on the renewed petition filed June 12, 2007, requesting that the above-identified application be accorded a filing date of June 26, 2006, instead of the present filing date of September 5, 2006.

On June 26, 2006, applicants deposited that above-identified application. On July 21, 2006, the Office of Initial Patent Examination mailed a Notice of Incomplete Provisional Application, stating that the application had not been accorded a filing date as the application was deposited without a specification. The Notice also stated a provisional application cover sheet under 37 CFR 1.51(c)(1), or an application data sheet (37 CFR 1.76), identifying either city and state or city and foreign country of the residence of each inventor and the names of the inventors was required. The Notice indicated that the filing date would be the date of receipt of the required item(s) and that any assertion that the item(s) were submitted, or not necessary for a filing date, must be made by way of a petition accompanied by a fee.

On September 5, 2006, applicants filed 40 pages of specification; 30 sheets of drawings; an Acknowledgement Receipt; a Provisional Application Cover Sheet; and an authorization to charge any necessary fees to the Deposit Account. Thereafter, the Office accorded the provisional application a filing date of September 5, 2006, the date of receipt of the required items.

On September 20, 2006, applicants filed the original petition, which was dismissed by the decision of April 13, 2007. In the original petition, applicants asserted they electronically deposited the documents necessary to obtain a serial number and filing date, including the specification, with the USPTO via "EFS-Web" on June 26, 2006. In support of their assertion, applicants provided the Office with copies of the specification, Provisional Application Cover Sheet, and Acknowledgement Receipt for Patent Electronic Filing, and the Statement of Rula Lopez an assistant with the law firm, who electronically filed the application on behalf of Kevin Zimmer.

Applicants averred that the specification was electronically deposited with the Office on June 26, 2006 via the "EFS-Web" process.

Specifically, applicants argued:

> The Acknowledgement Receipt was generated after the specification for the above-identified application had been electronically submitted in accordance with the procedures outlined on the USPTO web site and did not indicate any error in acceptance/transmission of the specification (see attached STATEMENT of Exhibit C). Moreover, the Acknowledgement Receipt of Exhibit B provides further indicia of apparently successful electronic filing of the above-identified application in the form an EFS ID (i.e., "1092433"), Application Number (i.e., "60805830"), Confirmation Number (i.e., "1022"), Receipt Date (i.e., "26-JUN-2006") and Application Type ("Provisional"), all of which indicate successful deposit of the above-identified application via the EFS-Web process.

Petition dated 09/20/06, p.2.

On June 12, 2007, applicants filed the present renewed petition, in which applicants presented essentially the same arguments as raised in their original petition of September 20, 2006. On renewed petition, applicants asserted that "in view of the possibility that a malfunction or other error occurred during the transmission of the papers electronically filed in this application, the [application should] be accorded the requested filing date of June 26, 2006." *Petition dated 06/12/07, p. 2.* The Office notes that pursuant to 35 U.S.C. 111(b)(4), "The filing date of a provisional application shall be the date on which the specification and any required drawing **are received in the Patent and Trademark Office**." (emphasis added). Despite applicants' argument, the USPTO does not have the authority to suspend or waive a requirement of a statute. See 37 CFR 1.183.

The Legal Framework for EFS-Web[1] notes that the Acknowledgement Receipt establishes the date of receipt by the USPTO of the electronic documents itemized in the receipt. The Acknowledgement Receipt contains a full listing of the documents submitted to the USPTO as described by applicant during the submission process, including the count of pages and/or byte sizes for each document. Thus, the Acknowledgement Receipt is the electronic equivalent of the postcard receipt described in MPEP 503. The official filing date is indicated on the Filing Receipt, after the submitted application parts are reviewed for compliance with 35 U.S.C. 111 and based on the dates indicated on the Acknowledgement Receipt, assuming that after review, the documents submitted are found to be entitled to an application filing date.

[1] http://www.uspto.gov/ebc/portal/efs/legal.htm. The Legal Framework provides guidance on the background statutes, regulations and policies that support the Electronic Filing System – Web (EFS-Web) project.

The Office notes that the Acknowledgement Receipt only indicates that the Office received what was actually sent, as opposed to what an applicant may have intended to transmit. The Office acknowledges applicants' argument that they did not only intend to transmit all of the documents necessary to obtain a filing date, but adhered to USPTO's policies regarding such electronic filing. However, after two separate consultations with the Electronic Business Center and a further review of the papers submitted on June 26, 2006, there is no record or indication of receipt of the application papers required to accord the provisional application the requested filing date.

With regard to applicants' assertion that the Acknowledgement Receipt was generated after the specification had been electronically submitted in accordance with the USPTO's procedures and did not indicate any error in acceptance/transmission of the specification, the Office notes that EFS-Web does not perform any checks regarding the completeness of an application before filing. Moreover, the electronic Acknowledgment Receipt does not guarantee that the application meets all of the requirements for a filing date. The Legal Framework for EFS-Web indicates: "One advantage of filing an application via EFS-Web is that the applicant may view the submission in PAIR and file a paper directly into the application on the same day as the filing date of the application." "In certain situations, applicant may correct an error by filing a missing item(s) on the same day as the filing date of the application." Id.

It is applicants' responsibility to make sure that the application is complete and the all the filing date requirements have been met. As such, it was incumbent on applicants to timely review the Acknowledgement Receipt and the submission in PAIR to verify that the proper documents were filed in the USPTO. A review of the Acknowledgement Receipt of June 26, 2006 by applicants would have revealed that only a fee sheet and a fee were transmitted to the USPTO on that date.

The Office has conducted a thorough review of applicants' assertions and supporting documents, as well as consulted with the Electronic Business Center for a second time; however, the Office does not find applicants' arguments persuasive. The Office file is the official record of the papers originally filed in this application. The Acknowledgement Receipt of June 26, 2006, supports the USPTO's records that applicants submitted only a fee sheet and paid a fee on that date. No other application papers were received in the USPTO on June 26, 2006. Therefore, the Notice of Incomplete was proper. The provisional application is not entitled to the earlier filing date of June 26, 2006. Rather, the filing date for the present provisional application will remain September 5, 2006, the date on which the specification and any required drawing were received in the USPTO.

Accordingly, the petition is **dismissed**. Any request for reconsideration should be filed within TWO (2) MONTHS of the date of this decision in order to be considered timely. 37 CFR 1.181(f). This time period may not be extended pursuant to 37 CFR 1.136.

Further correspondence with respect to this matter should be addressed as follows:

By mail: Mail Stop Petition
Commissioner for Patents
P.O. Box 1450
Alexandria, VA 22313-1450

By FAX: (571) 273-8300
Attn: Office of Petitions

By hand: Customer Service Window
Randolph Building
401 Dulany Street
Alexandria, VA 22314

Any inquiries related to this decision should be directed to the undersigned at (571) 272-3211.

Christina T. Donnell

Christina Tartera Donnell
Senior Petitions Attorney
Office of Petitions

UNITED STATES PATENT AND TRADEMARK OFFICE

Commissioner for Patents
United States Patent and Trademark Office
P.O. Box 1450
Alexandria, VA22313-1450
www.uspto.gov

WEYERHAEUSER COMPANY
INTELLECTUAL PROPERTY DEPT.,
CH 1J27
P.O. BOX 9777
FEDERAL WAY, WA 98063

COPY MAILED

AUG 0 8 2007

OFFICE OF PETITIONS

In re Application of
Anthony P. Swanda
Application No. 60/805,919
Filed: June 27, 2006
Attorney Docket No. 25944

ON PETITION

This is a decision on the petition filed April 11, 2007, to revive the above identified application under 37 CFR 1.137(b).[1]

The petition is **GRANTED**.

This application became abandoned on September 6, 2006, for failure to file a timely response to the Notice to File Missing Parts "Notice" mailed July 5, 2006, which set a two (2) month shortened statutory period for reply. No extensions of the time for reply under 37 CFR 1.136(a) were obtained. The instant petition and this decision precede the mailing of the Notice of Abandonment.

The Provisional Application Cover Sheet , in the form of an Application Data Sheet, has been provided and thus, this matter is being forwarded to the Office of Initial Patent Examination for further processing.

Telephone inquiries concerning this matter may be directed to the undersigned Petitions Attorney at (571) 272-3212.

Patricia Faison-Ball
Senior Petitions Attorney
Office of Petitions

---

[1] A grantable petition filed under the provisions of 37 CFR 1.137(b) must be accompanied by:

(1) the required reply, unless previously filed. In a nonprovisional application abandoned for failure to prosecute, the required reply may be met by the filing of a continuing application. In a nonprovisional utility or plant application filed on or after June 8, 1995, and abandoned for failure to prosecute, the required reply may also be met by the filing of a request for continued examination in compliance with § 1.114. In an application or patent, abandoned or lapsed for failure to pay the issue fee or any portion thereof, the required reply must be the payment of the issue fee or any outstanding balance thereof.

(2) the petition fee as set forth in 37 CFR 1.17(m);

(3) a statement that the entire delay in filing the required reply from the due date for the reply until the filing of a grantable petition pursuant to 37 CFR 1.137(b) was unintentional. The Commissioner may required additional information where there is a question whether the delay was unintentional; and

(4) any terminal disclaimer (and fee as set forth in 37 CFR 1.20(d)) required pursuant to 37 CFR 1.137(c)).

UNITED STATES PATENT AND TRADEMARK OFFICE

Commissioner for Patents
United States Patent and Trademark Office
P.O. Box 1450
Alexandria, VA 22313-1450
www.uspto.gov

Global IP Services, PLLC
198 F, 27th Cross, 3rd Block
Jayanagar, Bangalore 560 011
INDIA

COPY MAILED

OCT 2 5 2007

OFFICE OF PETITIONS

In re Application of Sankaran et al. :
Application No. 60/806,107 : Decision on Petition
Filing Date: June 29, 2006 :
Attorney Docket No. 00014.001PRV :

This is a decision on the petition under 37 CFR 1.181, filed July 9, 2007, to withdraw the holding of abandonment.

The petition is **granted.**

This application was held abandoned for failure to timely respond to the Office action of July 12, 2006, which set a two (2) month extendable period for reply. Accordingly, absent payment for an extension of time, a reply was due on or before September 12, 2006. A Notice of Abandonment was mailed on March 20, 2007.

Petitioner has proven non-receipt of the Notice of Missing Parts mailed July 12, 2006. Therefore, the Notice of Abandonment is hereby vacated and the holding of abandonment withdrawn.

The Office of Patent Application Processing will be informed of the instant decision and will mail a new Notice to File Missing Parts. A new Notice of Allowance and Fee(s) Due will be mailed and the period for reply will be re-started. The time period for responding to the new Notice will be set to run from the mailing date of the new Notice.

Telephone inquiries regarding this communication should be directed to Petitions Attorney Steven Brantley at (571) 272-3203.

Charles Steven Brantley
Senior Petitions Attorney
Office of Petitions

UNITED STATES PATENT AND TRADEMARK OFFICE

Commissioner for Patents
United States Patent and Trademark Office
P.O. Box 1450
Alexandria, VA 22313-1450
www.uspto.gov

TOWNSEND AND TOWNSEND AND CREW, LLP
TWO EMBARCADERO CENTER, 8th FLOOR
SAN FRANCISCO CA 94111-3834

COPY MAILED

NOV 07 2006

OFFICE OF PETITIONS

In re Application of	:	
ERLANSON	:	
Application No. 60/806,414	:	DECISION ON PETITION
Filed: June 30, 2006	:	TO WITHDRAW
Attorney Docket No. 025951-000300US	:	FROM RECORD
	:	

This is a decision on the Request to Withdraw as attorney or agent of record under 37 C.F.R. § 1.36(b), filed October 17, 2006.

The request is **NOT APPROVED**.

A grantable request to withdraw as attorney/agent of record must be signed by every attorney/agent seeking to withdraw or contain a clear indication that one attorney is signing on behalf of another/others. A request to withdraw will not be approved unless at least 30 (thirty) days would remain between the date of approval and the later of the expiration date of a time to file a response or the expiration date of the maximum time period which can be extended under 37 C.F.R. § 1.136(a).

The Office cannot approve the request at this time since the reasons provided do not meet any of the conditions under the mandatory or permissive categories enumerated in 37 CFR 10.40. Section 10.40 of Title 37 of the Code of Federal Regulation states, "[a] practitioner shall not withdraw from employment in a proceeding before the Office without permission from the Office[.]" More specifically, 37 CFR 10.40 states, "[i]f paragraph (b) of this section is not applicable, a practitioner may not request permission to withdraw in matter pending before the Office unless such request or such withdrawal is" for one the permissive reasons listed in 37 CFR 10.40(c). The reasons set forth in the request, "assignee instructed application be transferred", does not meet any of the conditions set forth in 37 CFR 10.40.

In order to request or take action in a patent matter, the assignee must establish its ownership of the patent to the satisfaction of the Director. In this regard, a Statement under 37 CFR 3.73(b) must have either: (i) documentary evidence of a chain of title from the original owner to the assignee (*e.g.*, copy of an executed assignment), and a statement affirming that the documentary evidence of the chain of title from the original owner to the assignee was or concurrently is being

submitted for recordation pursuant to § 3.11; or (ii) a statement specifying where documentary evidence of a chain of title from the original owner to the assignee is recorded in the assignment records of the Office (*e.g.*, reel and frame number).

All future communications from the Office will continue to be directed to the above-listed address until otherwise notified by applicant.

Telephone inquiries concerning this decision should be directed to the undersigned at 571-272-7253.

Monica A. Graves
Petitions Examiner
Office of Petitions

cc: **Paul Hastings**
JANOFSKY & WALKER LLP
3579 Valley Centre Drive
San Diego, CA 92130

UNITED STATES PATENT AND TRADEMARK OFFICE

Commissioner for Patents
United States Patent and Trademark Office
P.O. Box 1450
Alexandria, VA 22313-1450
www.uspto.gov

EITAN MEHULAL LAW GROUP
116 JOHN ST.
SUITE 1201
NEW YORK NY 10038

COPY MAILED

OCT 29 2007

OFFICE OF PETITIONS

In re Application of :
Boaz Zilberman :
Application No. 60/806,745 : DECISION GRANTING PETITION
Filed: July 7, 2006 : UNDER 37 CFR 1.137(b)
Attorney Docket No. P-9878-USP :

This is a decision on the petition under 37 CFR 1.137(b), filed May 10, 2007, to revive the above-identified application.

The petition is **GRANTED**.

The petition satisfies the conditions for revival pursuant to the provisions of 37 CFR 1.137(b) in that (1) the reply; (2) the petition fee; and (3) the required statement of unintentional delay have been received. Accordingly, the reply to the Notice To File Missing Parts Of Provisional Application of July 13, 2006, is accepted as having been unintentionally delayed.

Telephone inquiries concerning this decision should be directed to the undersigned at (571) 272-3208.

This matter is being referred to the Office of Initial Patent Examination.

Karen Creasy

Karen Creasy
Petitions Examiner
Office of Petitions

UNITED STATES PATENT AND TRADEMARK OFFICE

Commissioner for Patents
United States Patent and Trademark Office
P.O. Box 1450
Alexandria, VA 22313-1450
www.uspto.gov

OREN RECHES
RECHES PATENTS
POB 913
13 HADAFNA
ZORAN 42823 IL ISRAEL

COPY MAILED

APR 0 4 2008

OFFICE OF PETITIONS

ON PETITION

In re Application of :
Vladimir Koifman :
Application No. 60/807,848 :
Filed: July 20, 2006 :
Attorney Docket No. Adva03 :

This is a decision on the petition under the unintentional provisions of 37 CFR 1.137(b), filed August 1, 2007, to revive the above-identified application.

The petition is **DISMISSED**.

Any request for reconsideration of this decision must be submitted within TWO (2) MONTHS from the mail date of this decision. Extensions of time under 37 CFR 1.136(a) are permitted. The reconsideration request should include a cover letter entitled "Renewed Petition under 37 CFR 1.137(b)." This is **not** a final agency action within the meaning of 5 U.S.C. § 704.

The application became abandoned for failure to reply in a timely manner to the Notice To File Missing Parts Of Provisional Application mailed September 15, 2006.

A grantable petition under 37 CFR 1.137(b) must be accompanied by: (1) the required reply, unless previously filed; (2) the petition fee as set forth in 37 CFR 1.17(m); (3) a statement that the entire delay in filing the required reply from the due date for the reply until the filing of a grantable petition pursuant to 37 CFR 1.137(b) was unintentional; and (4) any terminal disclaimer (and fee as set forth in 37 CFR 1.20(d)) required by 37 CFR 1.137(d). Where there is a question as to whether either the abandonment or the delay in filing a petition under 37 CFR 1.137 was unintentional, the Director may require additional information. See MPEP 711.03(c)(II)(C) and (D). The instant petition lacks item(s) (1).

The Notice mailed September 15, 2006 required applicant to submit the provisional application cover sheet under 37 CFR 1.51(c)(1), which may be an application data sheet (37 CFR 1.76), identifying either city and state or city and foreign country of the residence of each inventor and the name(s) of the inventor(s).

Further correspondence with respect to this matter should be addressed as follows:

By Mail: Mail Stop PETITION
Commissioner for Patents
P. O. Box 1450
Alexandria, VA 22313-1450

By hand: U. S. Patent and Trademark Office
Customer Service Window, Mail Stop Petitions
Randolph Building
401 Dulany Street
Alexandria, VA 22314

The centralized facsimile number is **(571) 273-8300.**

Telephone inquiries concerning this decision should be directed to the undersigned at (571) 272-3208.

Karen Creasy

Karen Creasy
Petitions Examiner
Office of Petitions

UNITED STATES PATENT AND TRADEMARK OFFICE

Commissioner for Patents
United States Patent and Trademark Office
P.O. Box 1450
Alexandria, VA 22313-1450
www.uspto.gov

OREN RECHES
RECHES PATENTS
POB 913
HADAFNA 13
ZORAN 42823 IL ISRAEL

COPY MAILED

AUG 2 2 2007

OFFICE OF PETITIONS

In re Application of	:	
Wald, Ofer	:	
Application No. 60/807,935	:	ON PETITION
Filed: July 21, 2006	:	
Attorney Docket No. Oversi3	:	

This is a decision on the petition under 37 C.F.R. § 1.137(b), filed August 14, 2007, to revive the above-identified application.

The petition is **DISMISSED**.

Any request for reconsideration must be submitted within TWO (2) MONTHS from the mail date of this decision. No further petition fee is required for the request. Extensions of time under 37 CFR 1.136(a) are permitted. The reconsideration request should include a cover letter entitled "Renewed Petition under 37 CFR 1.137(b)." This is **not** a final agency action within the meaning of 5 U.S.C. § 704.

The above-identified application became abandoned for failure to reply in a timely manner to the Notice to File Missing Parts of Application (Notice) mailed August 23, 2006. The Notice set a period for reply of two (2) months from the mail date of the Notice. No extensions of time under the provisions of 37 CFR 1.136(a) were obtained. Accordingly, the above-identified application became abandoned on October 24, 2006. A Notice of Abandonment was mailed on May 4, 2007.

A grantable petition under 37 CFR 1.137(b) must be accompanied by:
(1) the required reply,[1]
(2) the petition fee,
(3) a statement that the entire delay in filing the required reply from the due date for the reply until the filing of a grantable petition pursuant to 37 CFR 1.137(b) was unintentional, and
(4) a terminal disclaimer and fee if the application was filed on or before June 8, 1995 or if the application is a design application.

Where there is a question as to whether either the abandonment or the delay in filing a petition under 37 CFR 1.137 was unintentional, the Commissioner may require additional information.[2]

[1] In a nonprovisional application abandoned for failure to prosecute, the required reply may be met by the filing of a continuing application. In an application or patent, abandoned or lapsed for failure to pay the issue fee or any portion thereof, the required reply must be the payment of the issue fee or any outstanding balance thereof.

The instant petition lacks item (1). The petition did not include a response to the Notice mailed August 23, 2006. Specifically, it did not include a provisional application cover sheet or the $25.00 surcharge. A copy of the Notice is enclosed.

Petitioner should be advised that a provisional application may be revived so as to be pending for a period no longer than 12 months from its filing date. If revived, this application will be deemed revived until July 21, 2007, when it would have been abandoned as a matter of law.

Further correspondence with respect to this matter should be addressed as follows:

By mail: Mail Stop PETITIONS
Commissioner for Patents
Post Office Box 1450
Alexandria, VA 22313-1450

By hand: Customer Window located at:

U.S. Patent and Trademark Office
Customer Service Window Randolph Building
401 Dulany Street
Alexandria, VA 22314

By fax: (571) 273-8300
ATTN: Office of Petitions

Any questions concerning this matter may be directed to the undersigned at (571) 272-3206.

Liana Walsh
Petitions Examiner
Office of Petitions

Enclosure: Notice to File Missing Parts of Provisional Application

---

[2] See MPEP 711.03(c)(III)(C) and (D).

UNITED STATES PATENT AND TRADEMARK OFFICE

UNITED STATES DEPARTMENT OF COMMERCE
United States Patent and Trademark Office
Address: COMMISSIONER FOR PATENTS
P.O. Box 1450
Alexandria, Virginia 22313-1450
www.uspto.gov

APPLICATION NUMBER	FILING OR 371 (c) DATE	FIRST NAMED APPLICANT	ATTORNEY DOCKET NUMBER
60/807,935	07/21/2006	Ofer Wald	Oversi3

CONFIRMATION NO. 9688

FORMALITIES LETTER

Oren Reches
Reches Patents
POB 913
Hadafna 13
Zoran, 42823
ISRAEL

Date Mailed: 08/23/2006

NOTICE TO FILE MISSING PARTS OF PROVISIONAL APPLICATION

FILED UNDER 37 CFR 1.53(c)

Filing Date Granted

An application number and filing date have been accorded to this provisional application. The items indicated below, however, are missing. Applicant is given **TWO MONTHS** from the date of this Notice within which to file all required items and pay any fees required below to avoid abandonment. Extensions of time may be obtained by filing a petition accompanied by the extension fee under the provisions of 37 CFR 1.136(a).

- The provisional application cover sheet under 37 CFR 1.51(c)(1), which may be an application data sheet (37 CFR 1.76), is required identifying either city and state or city and foreign country of the residence of each inventor and the name(s) of the inventor(s).

The applicant needs to satisfy supplemental fees problems indicated below.

The required item(s) identified below must be timely submitted to avoid abandonment:

- To avoid abandonment, a surcharge (for late submission of filing fee or cover sheet) as set forth in 37 CFR 1.16(g) of $25 for a small entity in compliance with 37 CFR 1.27, must be submitted with the missing items identified in this letter.

SUMMARY OF FEES DUE:

Total additional fee(s) required for this application is **$25** for a small entity

- **$25** Surcharge.

Replies should be mailed to: Mail Stop Missing Parts
Commissioner for Patents
P.O. Box 1450
Alexandria VA 22313-1450

A copy of this notice MUST be returned with the reply.

Office of Initial Patent Examination (571) 272-4000, or 1-800-PTO-9199, or 1-800-972-6382

PART 3 - OFFICE COPY

UNITED STATES PATENT AND TRADEMARK OFFICE

Commissioner for Patents
United States Patent and Trademark Office
P.O. Box 1450
Alexandria, VA 22313-1450
www.uspto.gov

Paper No.

ECOLAB INC.
MAIL STOP ESC-F7,
655 LONE OAK DRIVE
EAGAN MN 55121

COPY MAILED

JUL 09 2007

OFFICE OF PETITIONS

In re Application of	:	
Chopskie et al.	:	
Application No. 60/807,956	:	DECISION
Filed: July 21, 2006	:	ON PETITION
Atty Docket No. 2306USP1	:	

This is in response to the "COMMUNICATION REGARDING NOTICE OF INCOMPLETE PROVISIONAL APPLICATION," filed January 26, 2007. This paper is properly treated as a petition to accord a filing date of July 21, 2006.

Application papers in the above-identified application were deposited on July 21, 2006. However, on December 27, 2006, the Office of Initial Patent Examination mailed a "Notice of Incomplete Provisional Application," stating that the application had not been accorded a filing date because the application was deposited without drawings.

In response, applicant timely filed the instant petition. The required $400 petition fee has been charged to petitioner's Deposit Account, as authorized. Applicants submit drawings but assert that drawings are not necessary for the understanding of the subject matter of the application.

A review of the specification reveals that it refers to drawing figures, but no drawings were in the application-as-filed. It has been USPTO practice to treat an application that contains at

least one process or method claim as an application for which a drawing is not necessary for an understanding of the invention under 35 U.S.C. 113 (first sentence). See MPEP 601.01(f). However, the instant application has no claims. Thus, it was proper for the Office to mail a Notice of Incomplete Provisional Application. Nonetheless, in view of petitioner's contention that drawings are not necessary, it is concluded that this provisional application is entitled to a filing date.

In view thereof, the petition is **GRANTED** to the extent that the provisional application is accorded a filing date of July 21, 2006 with no drawings present in the application.

Furthermore, this provisional application cannot be amended to include drawings. Petitioner is reminded that as stated in 37 CFR 1.53(c):

> No amendment, other than to make the provisional application comply with the patent statute and all applicable regulations, may be made to the provisional application after the filing date of the provisional application.

Moreover, the Office will not enter drawings and accord the application a later filing date. As discussed in MPEP 601.01, in view of the relatively low filing fee for provisional applications, and the USPTO's desire to minimize the processing of provisional applications, the USPTO will not grant petitions under 37 CFR 1.182 to accept omitted page(s) and accord an application filing date as of the date of such submission in provisional applications. The applicant should simply file a new completed provisional application.

The Office of Initial Patent Examination (OIPE) has been advised of this decision. OIPE will **correct the filing date to July 21, 2006**, with "0" drawings present in the application.

The drawings filed January 26, 2007 will not be entered.

Applicants will receive appropriate notifications regarding the fees owed, if any, and other information in due course from OIPE.

Telephone inquiries specific to this decision may be directed to the undersigned at (571) 272-3219.

Nancy Johnson
Senior Petitions Attorney
Office of Petitions

UNITED STATES PATENT AND TRADEMARK OFFICE

UNITED STATES DEPARTMENT OF COMMERCE
United States Patent and Trademark Office
Address: COMMISSIONER FOR PATENTS
P.O. Box 1450
Alexandria, Virginia 22313-1450
www.uspto.gov

APPL NO.	FILING OR 371 (c) DATE	ART UNIT	FIL FEE REC'D	ATTY.DOCKET NO	DRAWINGS	TOT CLMS	IND CLMS
60/808,277	05/25/2006		200	2302P			

CONFIRMATION NO. 7662

CORRECTED FILING RECEIPT

OC000000019507509

27310
PIONEER HI-BRED INTERNATIONAL, INC.
7250 N.W. 62ND AVENUE
P.O. BOX 552
JOHNSTON, IA 50131-0552

Date Mailed: 07/06/2006

Receipt is acknowledged of this provisional Patent Application. It will not be examined for patentability and will become abandoned not later than twelve months after its filing date. Be sure to provide the U.S. APPLICATION NUMBER, FILING DATE, NAME OF APPLICANT, and TITLE OF INVENTION when inquiring about this application. Fees transmitted by check or draft are subject to collection. Please verify the accuracy of the data presented on this receipt. **If an error is noted on this Filing Receipt, please mail to the Commissioner for Patents P.O. Box 1450 Alexandria Va 22313-1450. Please provide a copy of this Filing Receipt with the changes noted thereon. If you received a "Notice to File Missing Parts" for this application, please submit any corrections to this Filing Receipt with your reply to the Notice. When the USPTO processes the reply to the Notice, the USPTO will generate another Filing Receipt incorporating the requested corrections (if appropriate).**

Applicant(s)

Jurgen Debaveye, Ledeberg, BELGIUM;
Xu Hu, Johnston, IA;
Guihua Lu, Johnston, IA;
Irene Nooren, Gent, NETHERLANDS;
Jennifer S. Tallman, Des Moines, IA;
Marc Van de Craen, Aalter, BELGIUM;

Power of Attorney: The patent practitioners associated with Customer Number **27310**.

If Required, Foreign Filing License Granted: 06/02/2006

The country code and number of your priority application, to be used for filing abroad under the Paris Convention, is US60/808,277

Projected Publication Date: None, application is not eligible for pre-grant publication

Non-Publication Request: Not applicable

Early-Publication Request: Not applicable

Title

RNAi targets for nematode control; target 13

PROTECTING YOUR INVENTION OUTSIDE THE UNITED STATES

Since the rights granted by a U.S. patent extend only throughout the territory of the United States and have no effect in a foreign country, an inventor who wishes patent protection in another country must apply for a patent in a specific country or in regional patent offices. Applicants may wish to consider the filing of an international application under the Patent Cooperation Treaty (PCT). An international (PCT) application generally has the same effect as a regular national patent application in each PCT-member country. The PCT process **simplifies** the filing of patent applications on the same invention in member countries, but **does not result** in a grant of "an international patent" and does not eliminate the need of applicants to file additional documents and fees in countries where patent protection is desired.

Almost every country has its own patent law, and a person desiring a patent in a particular country must make an application for patent in that country in accordance with its particular laws. Since the laws of many countries differ in various respects from the patent law of the United States, applicants are advised to seek guidance from specific foreign countries to ensure that patent rights are not lost prematurely.

Applicants also are advised that in the case of inventions made in the United States, the Director of the USPTO must issue a license before applicants can apply for a patent in a foreign country. The filing of a U.S. patent application serves as a request for a foreign filing license. The application's filing receipt contains further information and guidance as to the status of applicant's license for foreign filing.

Applicants may wish to consult the USPTO booklet, "General Information Concerning Patents" (specifically, the section entitled "Treaties and Foreign Patents") for more information on timeframes and deadlines for filing foreign patent applications. The guide is available either by contacting the USPTO Contact Center at 800-786-9199, or it can be viewed on the USPTO website at http://www.uspto.gov/web/offices/pac/doc/general/index.html.

For information on preventing theft of your intellectual property (patents, trademarks and copyrights), you may wish to consult the U.S. Government website, http://www.stopfakes.gov. Part of a Department of Commerce initiative, this website includes self-help "toolkits" giving innovators guidance on how to protect intellectual property in specific countries such as China, Korea and Mexico. For questions regarding patent enforcement issues, applicants may call the U.S. Government hotline at 1-866-999-HALT (1-866-999-4158).

LICENSE FOR FOREIGN FILING UNDER
Title 35, United States Code, Section 184
Title 37, Code of Federal Regulations, 5.11 & 5.15

GRANTED

The applicant has been granted a license under 35 U.S.C. 184, if the phrase "IF REQUIRED, FOREIGN FILING LICENSE GRANTED" followed by a date appears on this form. Such licenses are issued in all applications where the conditions for issuance of a license have been met, regardless of whether or not a license may be required as set forth in 37 CFR 5.15. The scope and limitations of this license are set forth in 37 CFR 5.15(a) unless an earlier license has been issued under 37 CFR 5.15(b). The license is subject to revocation upon written notification. The date indicated is the effective date of the license, unless an earlier license of similar scope has been granted under 37 CFR 5.13 or 5.14.

This license is to be retained by the licensee and may be used at any time on or after the effective date thereof unless it is revoked. This license is automatically transferred to any related applications(s) filed under 37 CFR 1.53(d). This license is not retroactive.

The grant of a license does not in any way lessen the responsibility of a licensee for the security of the subject matter as imposed by any Government contract or the provisions of existing laws relating to espionage and the national security or the export of technical data. Licensees should apprise themselves of current regulations

especially with respect to certain countries, of other agencies, particularly the Office of Defense Trade Controls, Department of State (with respect to Arms, Munitions and Implements of War (22 CFR 121-128)); the Bureau of Industry and Security, Department of Commerce (15 CFR parts 730-774); the Office of Foreign Assets Control, Department of Treasury (31 CFR Parts 500+) and the Department of Energy.

NOT GRANTED

No license under 35 U.S.C. 184 has been granted at this time, if the phrase "IF REQUIRED, FOREIGN FILING LICENSE GRANTED" DOES NOT appear on this form. Applicant may still petition for a license under 37 CFR 5.12, if a license is desired before the expiration of 6 months from the filing date of the application. If 6 months has lapsed from the filing date of this application and the licensee has not received any indication of a secrecy order under 35 U.S.C. 181, the licensee may foreign file the application pursuant to 37 CFR 5.15(b).

UNITED STATES PATENT AND TRADEMARK OFFICE

Commissioner for Patents
United States Patent and Trademark Office
P.O. Box 1450
Alexandria, VA 22313-1450
www.uspto.gov

SCULLY SCOTT MURPHY & PRESSER, PC
400 GARDEN CITY PLAZA
SUITE 300
GARDEN CITY NY 11530

COPY MAILED

MAY 17 2007

OFFICE OF PETITIONS

In re Application of	:	
Khew-Goodall et al.	:	
Application No. 60/808,735	:	ON PETITION
Filed: May 26, 2006	:	
Attorney Docket No. P19904	:	

This is a decision on the petition under 37 CFR 1.137(b), filed March 11, 2007, to revive the above-identified application.

The petition is **GRANTED**.

The instant petition requests revival of the application. Petitioner has met the requirements to revive the above-identified application pursuant to 37 CFR 1.137(b). Therefore, the petition is granted and the application is revived.

A provisional application may be revived so as to be pending for a period no longer than 12 months from its filing date. This application is hereby deemed revived until May 26, 2007, when it will go abandoned as a matter of law.

This matter will be referred to the Office of Initial Patent Examination for further processing.

Telephone inquiries regarding this decision should be directed to the undersigned at (571) 272-3282.

Liana Walsh
Petitions Examiner
Office of Petitions

UNITED STATES PATENT AND TRADEMARK OFFICE

UNITED STATES DEPARTMENT OF COMMERCE
United States Patent and Trademark Office
Address: COMMISSIONER FOR PATENTS
P.O. Box 1450
Alexandria, Virginia 22313-1450
www.uspto.gov

APPL NO.	FILING OR 371 (c) DATE	ART UNIT	FIL FEE REC'D	ATTY.DOCKET NO	DRAWINGS	TOT CLMS	IND CLMS
60/808,767	05/25/2006		100	187782/US	11		

CONFIRMATION NO. 1140

CORRECTED FILING RECEIPT

OC000000019881626

Richard F. Trecartin
Dorsey & Whitney LLP
Intellectual Property Department
555 California Street, Suite 1000
San Francisco, CA 94104-1513

Date Mailed: 08/03/2006

Receipt is acknowledged of this provisional Patent Application. It will not be examined for patentability and will become abandoned not later than twelve months after its filing date. Be sure to provide the U.S. APPLICATION NUMBER, FILING DATE, NAME OF APPLICANT, and TITLE OF INVENTION when inquiring about this application. Fees transmitted by check or draft are subject to collection. Please verify the accuracy of the data presented on this receipt. **If an error is noted on this Filing Receipt, please mail to the Commissioner for Patents P.O. Box 1450 Alexandria Va 22313-1450. Please provide a copy of this Filing Receipt with the changes noted thereon. If you received a "Notice to File Missing Parts" for this application, please submit any corrections to this Filing Receipt with your reply to the Notice. When the USPTO processes the reply to the Notice, the USPTO will generate another Filing Receipt incorporating the requested corrections (if appropriate).**

Applicant(s)

Reinhold Penner, Honolulu, HI;

Power of Attorney: The patent practitioners associated with Customer Number **32940**.

If Required, Foreign Filing License Granted: 06/12/2006

The country code and number of your priority application, to be used for filing abroad under the Paris Convention, is US60/808,767

Projected Publication Date: None, application is not eligible for pre-grant publication

Non-Publication Request: Not applicable

Early-Publication Request: Not applicable

**** SMALL ENTITY ****

Title

Methods of screening for TRPM4 modulators of insulin secretion

PROTECTING YOUR INVENTION OUTSIDE THE UNITED STATES

Since the rights granted by a U.S. patent extend only throughout the territory of the United States and have no effect in a foreign country, an inventor who wishes patent protection in another country must apply for a patent in a specific country or in regional patent offices. Applicants may wish to consider the filing of an international application under the Patent Cooperation Treaty (PCT). An international (PCT) application generally has the same effect as a regular national patent application in each PCT-member country. The PCT process **simplifies** the filing of patent applications on the same invention in member countries, but **does not result** in a grant of "an international patent" and does not eliminate the need of applicants to file additional documents and fees in countries where patent protection is desired.

Almost every country has its own patent law, and a person desiring a patent in a particular country must make an application for patent in that country in accordance with its particular laws. Since the laws of many countries differ in various respects from the patent law of the United States, applicants are advised to seek guidance from specific foreign countries to ensure that patent rights are not lost prematurely.

Applicants also are advised that in the case of inventions made in the United States, the Director of the USPTO must issue a license before applicants can apply for a patent in a foreign country. The filing of a U.S. patent application serves as a request for a foreign filing license. The application's filing receipt contains further information and guidance as to the status of applicant's license for foreign filing.

Applicants may wish to consult the USPTO booklet, "General Information Concerning Patents" (specifically, the section entitled "Treaties and Foreign Patents") for more information on timeframes and deadlines for filing foreign patent applications. The guide is available either by contacting the USPTO Contact Center at 800-786-9199, or it can be viewed on the USPTO website at http://www.uspto.gov/web/offices/pac/doc/general/index.html.

For information on preventing theft of your intellectual property (patents, trademarks and copyrights), you may wish to consult the U.S. Government website, http://www.stopfakes.gov. Part of a Department of Commerce initiative, this website includes self-help "toolkits" giving innovators guidance on how to protect intellectual property in specific countries such as China, Korea and Mexico. For questions regarding patent enforcement issues, applicants may call the U.S. Government hotline at 1-866-999-HALT (1-866-999-4158).

LICENSE FOR FOREIGN FILING UNDER
Title 35, United States Code, Section 184
Title 37, Code of Federal Regulations, 5.11 & 5.15

GRANTED

The applicant has been granted a license under 35 U.S.C. 184, if the phrase "IF REQUIRED, FOREIGN FILING LICENSE GRANTED" followed by a date appears on this form. Such licenses are issued in all applications where the conditions for issuance of a license have been met, regardless of whether or not a license may be required as set forth in 37 CFR 5.15. The scope and limitations of this license are set forth in 37 CFR 5.15(a) unless an earlier license has been issued under 37 CFR 5.15(b). The license is subject to revocation upon written notification. The date indicated is the effective date of the license, unless an earlier license of similar scope has been granted under 37 CFR 5.13 or 5.14.

This license is to be retained by the licensee and may be used at any time on or after the effective date thereof unless it is revoked. This license is automatically transferred to any related applications(s) filed under 37 CFR 1.53(d). This license is not retroactive.

The grant of a license does not in any way lessen the responsibility of a licensee for the security of the subject matter as imposed by any Government contract or the provisions of existing laws relating to espionage and the national security or the export of technical data. Licensees should apprise themselves of current regulations especially with respect to certain countries, of other agencies, particularly the Office of Defense Trade Controls, Department of State (with respect to Arms, Munitions and Implements of War (22 CFR 121-128)); the Bureau of Industry and Security, Department of Commerce (15 CFR parts 730-774); the Office of Foreign Assets Control, Department of Treasury (31 CFR Parts 500+) and the Department of Energy.

NOT GRANTED

No license under 35 U.S.C. 184 has been granted at this time, if the phrase "IF REQUIRED, FOREIGN FILING LICENSE GRANTED" DOES NOT appear on this form. Applicant may still petition for a license under 37 CFR 5.12, if a license is desired before the expiration of 6 months from the filing date of the application. If 6 months has lapsed from the filing date of this application and the licensee has not received any indication of a secrecy order under 35 U.S.C. 181, the licensee may foreign file the application pursuant to 37 CFR 5.15(b).

UNITED STATES PATENT AND TRADEMARK OFFICE

UNITED STATES DEPARTMENT OF COMMERCE
United States Patent and Trademark Office
Address: COMMISSIONER FOR PATENTS
P.O. Box 1450
Alexandria, Virginia 22313-1450
www.uspto.gov

APPL NO.	FILING OR 371 (c) DATE	ART UNIT	FIL FEE REC'D	ATTY.DOCKET NO	DRAWINGS	TOT CLMS	IND CLMS
60/808,768	05/25/2006		100	23540-11659 (UC2006-615-1	5		

CONFIRMATION NO. 1125

CORRECTED FILING RECEIPT

OC000000019942177

00758
FENWICK & WEST LLP
SILICON VALLEY CENTER
801 CALIFORNIA STREET
MOUNTAIN VIEW, CA 94041

Date Mailed: 08/08/2006

Receipt is acknowledged of this provisional Patent Application. It will not be examined for patentability and will become abandoned not later than twelve months after its filing date. Be sure to provide the U.S. APPLICATION NUMBER, FILING DATE, NAME OF APPLICANT, and TITLE OF INVENTION when inquiring about this application. Fees transmitted by check or draft are subject to collection. Please verify the accuracy of the data presented on this receipt. **If an error is noted on this Filing Receipt, please mail to the Commissioner for Patents P.O. Box 1450 Alexandria Va 22313-1450. Please provide a copy of this Filing Receipt with the changes noted thereon. If you received a "Notice to File Missing Parts" for this application, please submit any corrections to this Filing Receipt with your reply to the Notice. When the USPTO processes the reply to the Notice, the USPTO will generate another Filing Receipt incorporating the requested corrections (if appropriate).**

Applicant(s)

Melikhan Tanyeri, Champaign, IL;
Richard Perron, Davis, CA;
Ian M. Kennedy, Davis, CA;

Power of Attorney:

Jennifer Bush–50784

Projected Publication Date: None, application is not eligible for pre-grant publication

Non-Publication Request: Not applicable

Early-Publication Request: Not applicable

**** SMALL ENTITY ****

Title

Method for encapsulating an ultrasound contrast agent

PROTECTING YOUR INVENTION OUTSIDE THE UNITED STATES

Since the rights granted by a U.S. patent extend only throughout the territory of the United States and have no

effect in a foreign country, an inventor who wishes patent protection in another country must apply for a patent in a specific country or in regional patent offices. Applicants may wish to consider the filing of an international application under the Patent Cooperation Treaty (PCT). An international (PCT) application generally has the same effect as a regular national patent application in each PCT-member country. The PCT process **simplifies** the filing of patent applications on the same invention in member countries, but **does not result** in a grant of "an international patent" and does not eliminate the need of applicants to file additional documents and fees in countries where patent protection is desired.

Almost every country has its own patent law, and a person desiring a patent in a particular country must make an application for patent in that country in accordance with its particular laws. Since the laws of many countries differ in various respects from the patent law of the United States, applicants are advised to seek guidance from specific foreign countries to ensure that patent rights are not lost prematurely.

Applicants also are advised that in the case of inventions made in the United States, the Director of the USPTO must issue a license before applicants can apply for a patent in a foreign country. The filing of a U.S. patent application serves as a request for a foreign filing license. The application's filing receipt contains further information and guidance as to the status of applicant's license for foreign filing.

Applicants may wish to consult the USPTO booklet, "General Information Concerning Patents" (specifically, the section entitled "Treaties and Foreign Patents") for more information on timeframes and deadlines for filing foreign patent applications. The guide is available either by contacting the USPTO Contact Center at 800-786-9199, or it can be viewed on the USPTO website at http://www.uspto.gov/web/offices/pac/doc/general/index.html.

For information on preventing theft of your intellectual property (patents, trademarks and copyrights), you may wish to consult the U.S. Government website, http://www.stopfakes.gov. Part of a Department of Commerce initiative, this website includes self-help "toolkits" giving innovators guidance on how to protect intellectual property in specific countries such as China, Korea and Mexico. For questions regarding patent enforcement issues, applicants may call the U.S. Government hotline at 1-866-999-HALT (1-866-999-4158).

LICENSE FOR FOREIGN FILING UNDER
Title 35, United States Code, Section 184
Title 37, Code of Federal Regulations, 5.11 & 5.15

GRANTED

The applicant has been granted a license under 35 U.S.C. 184, if the phrase "IF REQUIRED, FOREIGN FILING LICENSE GRANTED" followed by a date appears on this form. Such licenses are issued in all applications where the conditions for issuance of a license have been met, regardless of whether or not a license may be required as set forth in 37 CFR 5.15. The scope and limitations of this license are set forth in 37 CFR 5.15(a) unless an earlier license has been issued under 37 CFR 5.15(b). The license is subject to revocation upon written notification. The date indicated is the effective date of the license, unless an earlier license of similar scope has been granted under 37 CFR 5.13 or 5.14.

This license is to be retained by the licensee and may be used at any time on or after the effective date thereof unless it is revoked. This license is automatically transferred to any related applications(s) filed under 37 CFR 1.53(d). This license is not retroactive.

The grant of a license does not in any way lessen the responsibility of a licensee for the security of the subject matter as imposed by any Government contract or the provisions of existing laws relating to espionage and the national security or the export of technical data. Licensees should apprise themselves of current regulations especially with respect to certain countries, of other agencies, particularly the Office of Defense Trade Controls, Department of State (with respect to Arms, Munitions and Implements of War (22 CFR 121-128)); the Bureau of Industry and Security, Department of Commerce (15 CFR parts 730-774); the Office of Foreign Assets Control, Department of Treasury (31 CFR Parts 500+) and the Department of Energy.

NOT GRANTED

No license under 35 U.S.C. 184 has been granted at this time, if the phrase "IF REQUIRED, FOREIGN FILING LICENSE GRANTED" DOES NOT appear on this form. Applicant may still petition for a license under 37 CFR 5.12, if a license is desired before the expiration of 6 months from the filing date of the application. If 6 months has lapsed from the filing date of this application and the licensee has not received any indication of a secrecy order under 35 U.S.C. 181, the licensee may foreign file the application pursuant to 37 CFR 5.15(b).

UNITED STATES PATENT AND TRADEMARK OFFICE

UNITED STATES DEPARTMENT OF COMMERCE
United States Patent and Trademark Office
Address: COMMISSIONER FOR PATENTS
P.O. Box 1450
Alexandria, Virginia 22313-1450
www.uspto.gov

APPL NO.	FILING OR 371 (c) DATE	ART UNIT	FIL FEE REC'D	ATTY.DOCKET NO	DRAWINGS	TOT CLMS	IND CLMS
60/809,090	05/26/2006		100	34414-508 PRO	5		

CONFIRMATION NO. 1351

CORRECTED FILING RECEIPT

OC000000019657333

Richard M. Lehrer
MINTZ, LEVIN, COHN, FERRIS,
GLOVSKY AND POPEO, P.C.
666 Third Avenue, 24th Floor
New York, NY 10017

Date Mailed: 07/18/2006

Receipt is acknowledged of this provisional Patent Application. It will not be examined for patentability and will become abandoned not later than twelve months after its filing date. Be sure to provide the U.S. APPLICATION NUMBER, FILING DATE, NAME OF APPLICANT, and TITLE OF INVENTION when inquiring about this application. Fees transmitted by check or draft are subject to collection. Please verify the accuracy of the data presented on this receipt. **If an error is noted on this Filing Receipt, please mail to the Commissioner for Patents P.O. Box 1450 Alexandria Va 22313-1450. Please provide a copy of this Filing Receipt with the changes noted thereon. If you received a "Notice to File Missing Parts" for this application, please submit any corrections to this Filing Receipt with your reply to the Notice. When the USPTO processes the reply to the Notice, the USPTO will generate another Filing Receipt incorporating the requested corrections (if appropriate).**

Applicant(s)

Blackman A. John, Boca Raton, FL;

Power of Attorney: The patent practitioners associated with Customer Number **35437**.

If Required, Foreign Filing License Granted: 06/13/2006

The country code and number of your priority application, to be used for filing abroad under the Paris Convention, is US60/809,090

Projected Publication Date: None, application is not eligible for pre-grant publication

Non-Publication Request: Not applicable

Early-Publication Request: Not applicable

**** SMALL ENTITY ****

Title

Clamshell blister packaging

PROTECTING YOUR INVENTION OUTSIDE THE UNITED STATES

Since the rights granted by a U.S. patent extend only throughout the territory of the United States and have no effect in a foreign country, an inventor who wishes patent protection in another country must apply for a patent in a specific country or in regional patent offices. Applicants may wish to consider the filing of an international application under the Patent Cooperation Treaty (PCT). An international (PCT) application generally has the same effect as a regular national patent application in each PCT-member country. The PCT process **simplifies** the filing of patent applications on the same invention in member countries, but **does not result** in a grant of "an international patent" and does not eliminate the need of applicants to file additional documents and fees in countries where patent protection is desired.

Almost every country has its own patent law, and a person desiring a patent in a particular country must make an application for patent in that country in accordance with its particular laws. Since the laws of many countries differ in various respects from the patent law of the United States, applicants are advised to seek guidance from specific foreign countries to ensure that patent rights are not lost prematurely.

Applicants also are advised that in the case of inventions made in the United States, the Director of the USPTO must issue a license before applicants can apply for a patent in a foreign country. The filing of a U.S. patent application serves as a request for a foreign filing license. The application's filing receipt contains further information and guidance as to the status of applicant's license for foreign filing.

Applicants may wish to consult the USPTO booklet, "General Information Concerning Patents" (specifically, the section entitled "Treaties and Foreign Patents") for more information on timeframes and deadlines for filing foreign patent applications. The guide is available either by contacting the USPTO Contact Center at 800-786-9199, or it can be viewed on the USPTO website at http://www.uspto.gov/web/offices/pac/doc/general/index.html.

For information on preventing theft of your intellectual property (patents, trademarks and copyrights), you may wish to consult the U.S. Government website, http://www.stopfakes.gov. Part of a Department of Commerce initiative, this website includes self-help "toolkits" giving innovators guidance on how to protect intellectual property in specific countries such as China, Korea and Mexico. For questions regarding patent enforcement issues, applicants may call the U.S. Government hotline at 1-866-999-HALT (1-866-999-4158).

LICENSE FOR FOREIGN FILING UNDER
Title 35, United States Code, Section 184
Title 37, Code of Federal Regulations, 5.11 & 5.15

GRANTED

The applicant has been granted a license under 35 U.S.C. 184, if the phrase "IF REQUIRED, FOREIGN FILING LICENSE GRANTED" followed by a date appears on this form. Such licenses are issued in all applications where the conditions for issuance of a license have been met, regardless of whether or not a license may be required as set forth in 37 CFR 5.15. The scope and limitations of this license are set forth in 37 CFR 5.15(a) unless an earlier license has been issued under 37 CFR 5.15(b). The license is subject to revocation upon written notification. The date indicated is the effective date of the license, unless an earlier license of similar scope has been granted under 37 CFR 5.13 or 5.14.

This license is to be retained by the licensee and may be used at any time on or after the effective date thereof unless it is revoked. This license is automatically transferred to any related applications(s) filed under 37 CFR 1.53(d). This license is not retroactive.

The grant of a license does not in any way lessen the responsibility of a licensee for the security of the subject matter as imposed by any Government contract or the provisions of existing laws relating to espionage and the national security or the export of technical data. Licensees should apprise themselves of current regulations especially with respect to certain countries, of other agencies, particularly the Office of Defense Trade Controls, Department of State (with respect to Arms, Munitions and Implements of War (22 CFR 121-128)); the Bureau of Industry and Security, Department of Commerce (15 CFR parts 730-774); the Office of Foreign Assets Control, Department of Treasury (31 CFR Parts 500+) and the Department of Energy.

NOT GRANTED

No license under 35 U.S.C. 184 has been granted at this time, if the phrase "IF REQUIRED, FOREIGN FILING LICENSE GRANTED" DOES NOT appear on this form. Applicant may still petition for a license under 37 CFR 5.12, if a license is desired before the expiration of 6 months from the filing date of the application. If 6 months has lapsed from the filing date of this application and the licensee has not received any indication of a secrecy order under 35 U.S.C. 181, the licensee may foreign file the application pursuant to 37 CFR 5.15(b).

UNITED STATES PATENT AND TRADEMARK OFFICE

Commissioner for Patents
United States Patent and Trademark Office
P.O. Box 1450
Alexandria, VA 22313-1450
www.uspto.gov

GEOFFREY PARDO
SPRAY VENTURE PARTNERS
2330 WASHINGTON STREET
NEWTON, MA 02462

COPY MAILED

AUG 0 8 2007

OFFICE OF PETITIONS

In re Application of :
Geoffrey Pardo et al. :
Application No. 60/809,278 :
Filed: April 18, 2006 :
Title of Invention: INTRAOCULAR PRESSURE :
ATTENUATION DEVICE

ON PETITION

This is a decision on the petition under 37 CFR 1.137(b),[1] filed March 21, 2007, to revive the above-identified application.

The petition under 37 CFR 1.137(b) is **GRANTED**.

This application became abandoned August 17, 2006, for failure to timely reply to the Notice to File Missing Parts mailed on June 16, 2006, which set a two (2) month shortened period for reply. No response having been timely filed, the application became abandoned. Accordingly, a Notice of Abandonment was mailed February 23, 2007.

---

[1]Effective December 1, 1997, the provisions of 37 CFR 1.137(b) now provide that where the delay in reply was unintentional, a petition may be filed to revive an abandoned application or a lapsed patent pursuant to 37 CFR 1.137(b). A grantable petition filed under the provisions of 37 CFR 1.137(b) must be accompanied by:

(1) the required reply, unless previously filed. In a nonprovisional application abandoned for failure to prosecute, the required reply may be met by the filing of a continuing application. In a nonprovisional application filed on or after June 8, 1995, and abandoned for failure to prosecute, the required reply may also be met by the filing of a request for continued examination in compliance with § 1.114. In an application or patent, abandoned or lapsed for failure to pay the issue fee or any portion thereof, the required reply must be the payment of the issue fee or any outstanding balance thereof. In an application abandoned for failure to pay the publication fee, the required reply must include payment of the publication fee.

(2) the petition fee as set forth in 37 CFR 1.17(m);

(3) a statement that the entire delay in filing the required reply from the due date for the reply until the filing of a grantable petition pursuant to 37 CFR 1.137(b) was unintentional. The Commissioner may required additional information where there is a question whether the delay was unintentional; and

(4) any terminal disclaimer (and fee as set forth in 37 CFR 1.20(d)) required pursuant to 37 CFR 1.137(c)).

Receipt of the additional filing fees as required by the Notice to File Missing Parts is acknowledged.

Additionally, there is no indication that petitioner herein was ever empowered to prosecute the instant application. If petitioner desires to receive future correspondence regarding this application, the appropriate power of attorney documentation must be submitted. A courtesy copy of this decision will be mailed to petitioner. However, all future correspondence will be directed to the address of record until such time as appropriate instructions are received to the contrary.

The application is being forwarded to the Office of Initial Patent Examination for further processing with a filing date of May 31, 2006, using the application papers filed on that date, without Figures 32A-49 as a part of the original disclosure.

Telephone inquiries concerning this matter should be directed to the undersigned Petitions Attorney at (571) 272-3212.

Patricia Faison-Ball

Patricia Faison-Ball
Senior Petitions Attorney
Office of Petitions

cc:

ORRICK, HERRINGTON & SUTCLIFFE, LLP
IP PROSECUTION DEPARTMENT
4 PARK PLAZA
SUITE 1600
IRVINE, CA 92614-2558

UNITED STATES PATENT AND TRADEMARK OFFICE

Commissioner for Patents
United States Patent and Trademark Office
P.O. Box 1450
Alexandria, VA 22313-1450
www.uspto.gov

INTELLECTUAL PROPERTY / TECHNOLOGY LAW
PO BOX 14329
RESEARCH TRIANGLE PARK NC 27709

COPY MAILED
AUG 0 7 2006
OFFICE OF PETITIONS

In re Application of	:
Roeder, et al.	: DECISION GRANTING
Application No. 60/809,292	: PETITION
Filed: May 31, 2006	:
Attorney Docket No. 2771-798-PRV	:
For: STORAGE AND TRANSPORT CONTAINER FOR MATERIALS SUSCEPTIBLE TO PHYSICAL STATE CHANGE UNDER VARIABLE AMBIENT TEMPERATURE CONDITIONS	

This is a decision on the petition, filed June 16, 2006, requesting that the above-identified application be accorded a filing date of May 30, 2006 rather than the presently accorded filing date of May 31, 2006. The petition will be treated under 37 CFR 1.10(c).

Petitioners contend that the above-identified application was deposited in the United States Postal Service (USPS) Express Mail service on May 30, 2006. In support of this contention, petitioners have supplied with the present petition a copy of the Express Mail label, receipt no. EO009341452US, showing a Date-In of 5/31/06 and a postal date stamp of MAY 30 2006. In addition, petitioners have submitted a copy of a USPS Track and Confirm printout that shows a package associated with Express Mail label no. EO009341452US was accepted by the USPS on May 30, 2006. A review of the application file reveals that the Provisonal Application for Patent Cover Sheet references Express Mail Receipt Number: EO009341452US.

The evidence presented establishes that the Express Mail package associated with Express Mail label no. EO009341452US was deposited with the USPS on May 30, 2006.

Accordingly, the petition is granted.

No fee has been or will be charged in connection with this petition.

The application is being returned to the Office of Initial Patent Examination for correction of the filing date to **May 30, 2006**.

Any inquiries related to this decision should be directed to the undersigned at (571) 272-3230.

Shirene Willis Brantley
Petitions Attorney
Office of Petitions

UNITED STATES PATENT AND TRADEMARK OFFICE

Commissioner for Patents
United States Patent and Trademark Office
P.O. Box 1450
Alexandria, VA 22313-1450
www.uspto.gov

NIXON PEABODY, LLP
401 9TH STREET, NW
SUITE 900
WASHINGTON DC 20004-2128

COPY MAILED

JUN 04 2007

OFFICE OF PETITIONS

In re Application of	:	
Simonelli et al.	:	
Application No. 60/809345	:	
Filing or 371(c) Date: 05/31/2006	:	
Attorney Docket Number:	:	DECISION
032228-130099	:	ON PETITION

This is a decision on the "Petition in Response to Notice of Incomplete Provisional Application", filed August 14, 2006, requesting the above-identified application be accorded a filing date of May 31, 2006. The delay in treating this petition is regretted.

The petition is granted.

The application was filed on May 31, 2006. On June 27, 2006, the Office of Initial Patent Examination mailed a Notice of Incomplete Provisional Application (hereinafter "Notice"), informing Applicant that the application had NOT been accorded a filing date because the application had been deposited without drawings.

Applicant responds with the instant petition and avers that fourteen (14) sheets of drawings were filed in the application on May 31, 2006. In support of this assertion, Applicant files a copy of his return-receipt postcard acknowledging receipt of fourteen (14) sheets of drawings (Figs. 1-16) by this Office on May 31, 2006.

"A postcard receipt which itemizes and properly identifies the papers which are being filed serves as *prima facie* evidence of receipt in the PTO of all items listed thereon by the PTO." MPEP § 503.

Accordingly, the petition is granted.

In view of the above, the Notice was mailed in error and is hereby withdrawn.

A refund of the petition fee has been credited to Petitioner's deposit account as authorized in the petition.

The copy of fourteen (14) sheets of drawings (Figs. 1-16), filed with the instant petition, will be used for examination purposes.

This application is being forwarded to the Office of Initial Patent Examination, Customer Corrections, for further processing, with the filing date of May 31, 2006, and an indication that fourteen (14) sheets of drawings (Figs. 1-16), were present on May 31, 2006, using the fourteen (14) sheets of drawings (Figs. 1-16), filed with the present petition on August 14, 2006.

Telephone inquiries concerning this matter should be directed to the undersigned at (571-272-3232.

Derek L. Woods
Attorney
Office of Petitions

UNITED STATES PATENT AND TRADEMARK OFFICE

Commissioner for Patents
United States Patent and Trademark Office
P.O. Box 1450
Alexandria, VA 22313-1450
www.uspto.gov

STERNE, KESSLER, GOLDSTEIN & FOX
1100 NEW YORK AVENUE, N.W.
WASHINGTON DC 20005

COPY MAILED

DEC 0 4 2006

OFFICE OF PETITIONS

In re Application of
Sumant Ranganathan et al
Application No. 60/809,393
Filed: May 31, 2006
Attorney Docket No. 1875.9390000

: DECISION GRANTING FILING
: DATE OF **MAY 31, 2006**

This is a decision on the petition filed July 14, 2006 under 37 CFR 1.53(e), stating that four (4) sheets of drawings Figures 1-4 were present on filing of the above-identified application.

The petition is **granted**.

The application was deposited on May 31, 2006. However, on June 15, 2006, the Office of Initial Patent Examination Division mailed a "Notice Of Incomplete Provisional Application," stating that the application was deposited without drawings.

In response, on July 14, 2006, the instant petition and a copy of four (4) sheets of drawings, Figures 1-4 were submitted. The papers were accompanied by a copy of applicant's postcard receipt that acknowledges receipt of four (4) sheets of drawings, Figures 1-4 on May 31, 2006. A review of the application file indicates the presence of the four (4) sheets of drawings, Figures 1-4 on May 31, 2006. The drawings were incorrectly scanned in with the abstract.

MPEP 503 states that "A postcard receipt which itemizes and properly identifies the papers which are being filed serves as prima facie evidence of receipt in the PTO of all the items listed thereon on the date stamped thereon by the PTO." Further, as stated above, the drawings were incorrectly scanned in with the abstract which was filed on May 31, 2006.

In view of the above, the Notice mailed June 15, 2006 is vacated and the petition fee of $400 is being credited to deposit account no. 19-0036 as authorized.

This matter is being referred to the Office of Initial Patent Examination Division for processing with a filing date of **May 31, 2006**, and for an indication that four (4) sheets of drawings, Figures 1-4 were present on filing and for mailing of a corrected filing receipt.

Telephone inquiries concerning this matter may be directed to the undersigned at (571) 272-3208.

Karen Creasy

Karen Creasy
Petitions Examiner
Office of Petitions

UNITED STATES PATENT AND TRADEMARK OFFICE

Commissioner for Patents
United States Patent and Trademark Office
P.O. Box 1450
Alexandria, VA 22313-1450
www.uspto.gov

COPY MAILED

JAN 22 2007

OFFICE OF PETITIONS

INTELLECTUAL PROPERTY/TECHNOLOGY LAW
PO BOX 14329
RESEARCH TRIANGLE PARK NC 27709

In re Application of	:
Daniel J. Vestyck et al	:DECISION GRANTING FILING
Application No. 60/809,448	:DATE OF **MAY 30, 2006**
Filed: May 30, 2006	:
Attorney Docket No. 2771-767-PRV2	:

This is a decision on the petition filed September 19, 2006 which is being treated under 37 CFR 1.10, requesting that the above-identified application be accorded a filing date of May 30, 2006, rather than the presently accorded date of May 31, 2006.

Petitioner requests the earlier filing date on the basis that the application was purportedly deposited with the U.S. Postal Service (USPS) as Express Mail on May 30, 2006 pursuant to 37 CFR 1.10. In support, petitioner has submitted a copy of the USPS Express Mail Label No. EO009328014US with a date stamped of May 30, 2006 in Chapel Hill NC. Also, provided is a copy of the Intranet Track Confirmation which verifies the acceptance date of May 30, 2006 in Chapel Hill NC. The same Express Mail receipt number appears on the original " Provisional Application Transmittal."

In view of the above, it is concluded that the application was deposited as "Express Mail" with the USPS on May 30, 2006.

The petition is **granted**.

The application file is being referred to the Office of Initial Patent Examination for processing with a filing date of **May 30, 2006,** and for the mailing of a corrected Filing Receipt.

Telephone inquiries specific to this decision on petition should be directed to Karen Creasy at (571) 272-3208.

Karen Creasy

Karen Creasy
Petitions Examiner
Office of Petitions

UNITED STATES PATENT AND TRADEMARK OFFICE

Commissioner for Patents
United States Patent and Trademark Office
P.O. Box 1450
Alexandria, VA 22313-1450
www.uspto.gov

PHARMACEUTICAL PATENT ATTORNEYS, LLC
55 MADISON AVENUE
4TH FLOOR
MORRISTOWN, NJ 07960-7397

COPY MAILED
JUN 23 2006
OFFICE OF PETITIONS

In re Application of	:	
Walter E. Kozachuk	:	
Application No. 60/809,787	:	
Deposited: June 12, 2006	:	
Title of Invention:	:	DECISION
SAFER OBESITY TREATMENT PROTOCOL	:	ON PETITION

This is in response to the Petition, filed June 6, 2006. The petition is properly treated under 37 CFR 1.53, requesting the Office accord a filing date of May 31, 2006, to the Application.

Application papers in the above-identified application were deposited on May 31, 2006, but did not include a specification. In response, this Office mailed a Notice of Incomplete Provisional Application, informing Applicant that a filing date had NOT been accorded the application because the application had been deposited without a specification.

Applicant files the instant petition and avers that the application as deposited on May 31, 2006, included a specification. Applicant provides no documentary support for this assertion.

Applicant is advised that, in order to demonstrate the contents of any filing with this Office, section 503 of the Manual of Patent Examining Procedure ("MPEP"), provides that

> [i]f a receipt of any item (e.g., paper or fee) filed in the USPTO is desired, it may be obtained by enclosing with the paper a self-addressed postcard specifically identifying the item. The USPTO will stamp the receipt date on the postcard and place it in the outgoing mail. A postcard receipt which itemizes and properly identifies the items which are being filed serves as prima facie evidence of receipt in the

> USPTO of all items listed thereon on the date stamped thereon by the USPTO.

Applicant has not provided any evidence, outside of Applicant's assertion, that would demonstrate that the specification was filed with this Office on May 31, 2006. The Office file is the Official record of what was deposited on May 31, 2006. The petition is dismissed without prejudice. If Applicant has documentary evidence, e.g. a copy of a return receipt postcard, to support his assertion that the Application was deposited on May 31, 2006, Applicant should submit such evidence in any renewed petition.

The MPEP cautions applicants that

> [I]f a new application is being filed, all parts of the application being submitted should be separately listed on the post card, e.g. the number of pages of specification (including written description, claims and abstract), number of claims, number of sheets of drawings, number of pages of oath/declaration, number of pages of cover sheet (provisional application).
>
> The postcard receipt will not serve as prima facie evidence of receipt of any item which is not adequately itemized on the postcard. For example, merely listing on the postcard 'a complete application' or 'patent application' will not serve as a proper receipt for each of the required components of an application (e.g., specification (including claims), drawings (if necessary), oath or declaration and the application filing fee[] or missing portions (e.g., pages, sheets of drawings) of an application if one of the components or portions of a component is found to be missing by the USPTO. Each separate component should be specifically and properly itemized on the postcard.

MPEP § 503

Applicant is further advised that, in order to obtain a filing date, an application must, at a minimum contain a specification, claims, and any drawings necessary for an understanding of the invention. The Notice indicated that Applicant failed to comply with 35 U.S.C. § 112 because there was no specification present.

The specification did not comply with the statute because it was absent. Applicant's assertion - that the Notice was sent anonymously - is without merit. The Notice clearly identified the Office from which it was issued, and where a reply should be sent. It is also immaterial to the issue if the granting of a filing date.

The application is being returned to the Office of Initial Patent Examination to accord the application a filing date of June 12, 2006, and for further processing of the papers filed with the instant petition on June 12, 2006.

Telephone inquiries concerning this decision should be directed to the undersigned at (571) 272-3232.

Derek L. Woods
Attorney
Office of Petitions

UNITED STATES PATENT AND TRADEMARK OFFICE

Commissioner for Patents
United States Patent and Trademark Office
P.O. Box 1450
Alexandria, VA 22313-1450
www.uspto.gov

WENDEROTH, LIND & PONACK, L.L.P.
2033 K STREET N.W.
SUITE 800
WASHINGTON DC 20006-1021

COPY MAILED

MAR 17 2008

OFFICE OF PETITIONS

In re Application of	:	
Jong-Shing Guo et al	:	
Application No. 60/809,846	:	ON PETITION
Filed: June 1, 2006	:	
Attorney Docket No. PR06 0855A	:	

This is a decision on the petition under the unintentional provisions of 37 CFR 1.137(b), filed July 27, 2007, to revive the above-identified application.

The petition is **DISMISSED**.

Any request for reconsideration of this decision must be submitted within TWO (2) MONTHS from the mail date of this decision. Extensions of time under 37 CFR 1.136(a) are permitted. The reconsideration request should include a cover letter entitled "Renewed Petition under 37 CFR 1.137(b)." This is **not** a final agency action within the meaning of 5 U.S.C. § 704.

The application became abandoned for failure to reply in a timely manner to the Notice To File Missing Parts Of Provisional Application (Notice) mailed June 19, 2006.

A grantable petition under 37 CFR 1.137(b) must be accompanied by: (1) the required reply, unless previously filed; (2) the petition fee as set forth in 37 CFR 1.17(m); (3) a statement that the entire delay in filing the required reply from the due date for the reply until the filing of a grantable petition pursuant to 37 CFR 1.137(b) was unintentional; and (4) any terminal disclaimer (and fee as set forth in 37 CFR 1.20(d)) required by 37 CFR 1.137(d). Where there is a question as to whether either the abandonment or the delay in filing a petition under 37 CFR 1.137 was unintentional, the Director may require additional information. See MPEP 711.03(c)(II)(C) and (D). The instant petition lacks item(s) (1).

The reply submitted on July 27, 2007, failed to provide an **provisional application cover sheet** under 37 CFR 1.51(c)(1), which may be an **application data sheet** (37 CFR 1.76), identifying the names of the inventors, either city and state or city and foreign country of the residence of each inventor as required in the Notice mailed June 19, 2006.

Further correspondence with respect to this matter should be addressed as follows:

By Mail: Mail Stop PETITION
Commissioner for Patents
P. O. Box 1450
Alexandria, VA 22313-1450

By hand: U. S. Patent and Trademark Office
Customer Service Window, Mail Stop Petitions
Randolph Building
401 Dulany Street
Alexandria, VA 22314

The centralized facsimile number is **(571) 273-8300.**

Telephone inquiries concerning this decision should be directed to the undersigned at (571) 272-3208.

Karen Creasy
Petitions Examiner
Office of Petitions

UNITED STATES PATENT AND TRADEMARK OFFICE

Commissioner for Patents
United States Patent and Trademark Office
P.O. Box 1450
Alexandria, VA 22313-1450
www.uspto.gov

WENDEROTH, LIND & PONACK, L.L.P.
2033 K STREET N.W.
SUITE 800
WASHINGTON DC 20006-1021

COPY MAILED
AUG 18 2008

In re Application of	:
Jong-Shing Guo et al	:
Application No. 60/809,846	: DECISION GRANTING PETITION
Filed: June 1, 2006	: UNDER 37 CFR 1.137(b)
Attorney Docket No. PR06 0855A	:

This is a decision on the renewed petition under 37 CFR 1.137(b), filed March 21, 2008, to revive the above-identified application.

The petition is **GRANTED**.

The petition satisfies the conditions for revival pursuant to the provisions of 37 CFR 1.137(b), in that (1) the reply in the form of an Application Data Sheet and surcharge fee ; (2) the petition fee; and (3) the required statement of unintentional delay have been received. Accordingly, the reply to the Notice To File Missing Parts Of Provisional Application mailed June 19, 2006, is accepted as having been unintentionally delayed.

Telephone inquiries concerning this decision should be directed to the undersigned at (571) 272-3208.

This matter is being referred to the Office of Patent Application Processing.

Karen Creasy
Petitions Examiner
Office of Petitions

UNITED STATES PATENT AND TRADEMARK OFFICE

Commissioner for Patents
United States Patent and Trademark Office
P.O. Box 1450
Alexandria, VA 22313-1450
www.uspto.gov

WENDEROTH, LIND & PONACK, L.L.P.
2033 K STREET N.W.
SUITE 800
WASHINGTON DC 20006-1021

COPY MAILED

MAR 17 2008

OFFICE OF PETITIONS

In re Application of	:	
Jong-Shing Guo et al	:	
Application No. 60/809,847	:	ON PETITION
Filed: June 1, 2006	:	
Attorney Docket No. PR06 0856A	:	

This is a decision on the petition under the unintentional provisions of 37 CFR 1.137(b), filed July 27, 2007, to revive the above-identified application.

The petition is **DISMISSED**.

Any request for reconsideration of this decision must be submitted within TWO (2) MONTHS from the mail date of this decision. Extensions of time under 37 CFR 1.136(a) are permitted. The reconsideration request should include a cover letter entitled "Renewed Petition under 37 CFR 1.137(b)." This is **not** a final agency action within the meaning of 5 U.S.C. § 704.

The application became abandoned for failure to reply in a timely manner to the Notice To File Missing Parts Of Provisional Application (Notice) mailed June 19, 2006.

A grantable petition under 37 CFR 1.137(b) must be accompanied by: (1) the required reply, unless previously filed; (2) the petition fee as set forth in 37 CFR 1.17(m); (3) a statement that the entire delay in filing the required reply from the due date for the reply until the filing of a grantable petition pursuant to 37 CFR 1.137(b) was unintentional; and (4) any terminal disclaimer (and fee as set forth in 37 CFR 1.20(d)) required by 37 CFR 1.137(d). Where there is a question as to whether either the abandonment or the delay in filing a petition under 37 CFR 1.137 was unintentional, the Director may require additional information. See MPEP 711.03(c)(II)(C) and (D). The instant petition lacks item(s) (1).

The reply submitted on July 27, 2007, failed to provide an **provisional application cover sheet** under 37 CFR 1.51(c)(1), which may be an **application data sheet** (37 CFR 1.76), identifying the names of the inventors, either city and state or city and foreign country of the residence of each inventor as required in the Notice mailed June 19, 2006.

Further correspondence with respect to this matter should be addressed as follows:

By Mail: Mail Stop PETITION
Commissioner for Patents
P. O. Box 1450
Alexandria, VA 22313-1450

By hand: U. S. Patent and Trademark Office
Customer Service Window, Mail Stop Petitions
Randolph Building
401 Dulany Street
Alexandria, VA 22314

The centralized facsimile number is **(571) 273-8300.**

Telephone inquiries concerning this decision should be directed to the undersigned at (571) 272-3208.

Karen Creasy

Karen Creasy
Petitions Examiner
Office of Petitions

UNITED STATES PATENT AND TRADEMARK OFFICE

Commissioner for Patents
United States Patent and Trademark Office
P.O. Box 1450
Alexandria, VA 22313-1450
www.uspto.gov

WENDEROTH, LIND & PONACK,L.L.P.
2033 K STREET N.W.
SUITE 800
WASHINGTON DC 20006-1021

COPY MAILED

SEP 23 2008

OFFICE OF PETITIONS

In re Application of	:	
Jong-Shing Guo et al	:	
Application No. 60/809,847	:	DECISION GRANTING PETITION
Filed: June 1, 2006	:	UNDER 37 CFR 1.137(b)
Attorney Docket No. PR06 0856A	:	

This is a decision on the renewed petition under 37 CFR 1.137(b), filed March 21, 2008, to revive the above-identified application.

The petition is **GRANTED**.

The petition satisfies the conditions for revival pursuant to the provisions of 37 CFR 1.137(b) in that (1) the reply in the form of an Application Data Sheet; (2) the petition fee; and (3) the required statement of unintentional delay have been received. Accordingly, the reply to the Notice To File Missing Parts Of Provisional Application mailed June 19, 2006, is accepted as having been unintentionally delayed.

Telephone inquiries concerning this decision should be directed to the undersigned at (571) 272-3208.

This matter is being referred to the Office of Patent Application Processing.

Karen Creasy

Karen Creasy
Petitions Examiner
Office of Petitions

UNITED STATES PATENT AND TRADEMARK OFFICE

Commissioner for Patents
United States Patent and Trademark Office
P.O. Box 1450
Alexandria, VA 22313-1450
www.uspto.gov

Michael de Angeli
60 Intrepid Lane
Jamestown RI 02835

COPY MAILED

AUG 0 1 2006

OFFICE OF PETITIONS

In re Application of :
Selby : DECISION ON PETITION
Application No. 60/809,852 :
Filed: June 1, 2006 :
Attorney Docket No. HWS-261 :

This is a decision on the "PETITION IN RESPONSE TO NOTICE OF OMITTED ITEM(S) IN PROVISIONAL APPLICATION" filed June 30, 2006. Petitioner requests that the above-identified application be accorded a filing date of June 1, 2006, with page 9 of the specification considered part of the original application disclosure.

Application papers in the above-identified application were filed on June 1, 2006. However, on June 19, 2006, the Office mailed a "Notice of Omitted Item(s) in a Provisional Application," advising applicant that the application papers had been accorded a filing date; however, page 9 of the specification appeared to have been omitted.

In response, applicant timely filed the instant petition. Applicant maintains that the allegedly omitted page was in fact received by the PTO with the application papers. In support thereof, applicant submitted *inter alia* a copy of their return postcard from the USPTO. Applicant also submitted a copy of page 9 of the specification.

A postcard receipt, which itemizes and properly identifies the items, which are being filed, serves as *prima facie* evidence of receipt in the Office of all items listed thereon on the date stamped thereon by the Office. See MPEP 503. A review of petitioner's postcard receipt reveals that: 1) it was date stamped as received by the Office on June 1, 2006 and the papers filed therewith assigned provisional application No. 60/809852; 2) it specifically identifies the items being filed, including

"11 pages text" and 3) it lacks any annotation of non-receipt of any item denoted on the postcard. Thus, petitioner has shown that the items denoted were filed on June 1, 2006.

The application papers already considered received in the Office on June 1, 2006, were reviewed along with page 9 submitted on petition. These papers together constitute the items described on the postcard receipt as "11 pages text." However, petitioner is advised that in the future use of the word "text" instead of "specification" may deem the itemization on the postcard insufficient to be *prima facie* evidence or even persuasive evidence of the receipt of papers in the Office. The word "text" may not be sufficiently clear for the reviewer of the postcard to acknowledge receipt of pages of specification versus pages of an appendix or other papers filed with the application papers. See MPEP 503. Nonetheless, in this instance, the evidence is persuasive. It is concluded that petitioner has shown that page 9 of the specification was among the items present in the application on the date of deposit and should be included in the original application disclosure.

Accordingly, the petition is **GRANTED**.

Given the basis for granting the petition, the petition fee is subject to refund. Accordingly, although authorized, no petition fee is being charged to petitioner's Deposit Account.

The application is being returned to the Office of Initial Patent Examination (OIPE) for:

- reprocessing with a filing date of June 1, 2006, using the application papers received in the Office and presently accorded that date; and page 9 of the specification re-supplied on petition filed June 30, 2006.

Telephone inquiries specific to this decision should be directed to the undersigned at (571) 272-3219.

Nancy Johnson

Nancy Johnson
Senior Petitions Attorney
Office of Petitions

UNITED STATES PATENT AND TRADEMARK OFFICE

Commissioner for Patents
United States Patent and Trademark Office
P.O. Box 1450
Alexandria, VA 22313-1450
www.uspto.gov

BIRCH STEWART KOLASCH & BIRCH
PO BOX 747
FALLS CHURCH, VA 22040-0747

COPY MAILED

APR 1 1 2008

OFFICE OF PETITIONS

In re Application of :
Yasunori Moritani et al :
Application No. 60/810,149 : DECISION ON PETITION
Filed: June 2, 2006 :
Attorney Docket No. 0020-5491PUS1 :

This is a decision on the petition under 37 CFR 1.182, filed, October 18, 2007, to change the name of the third named inventor "Mariko Furukawa" to – Mariko Oi --.

The petition is **GRANTED**.

Office records have been updated to reflect the inventor's change of name. A corrected Filing Receipt, which reflects the inventor's change of name, accompanies this decision on petition.

Any questions concerning this matter may be directed to Irvin Dingle at (571) 272-3210.

Any questions concerning the examination procedures or status of the application should be directed to the Technology Center.

Irvin Dingle
Petition Examiner
Office of Petitions

Attachment: corrected Filing Receipt

UNITED STATES PATENT AND TRADEMARK OFFICE

UNITED STATES DEPARTMENT OF COMMERCE
United States Patent and Trademark Office
Address: COMMISSIONER FOR PATENTS
P.O. Box 1450
Alexandria, Virginia 22313-1450
www.uspto.gov

APPLICATION NUMBER	FILING or 371(c) DATE	GRP ART UNIT	FIL FEE REC'D	ATTY.DOCKET.NO	TOT CLAIMS	IND CLAIMS
60/810,149	06/02/2006		200	0020-5491PUS1		

CONFIRMATION NO. 7092

CORRECTED FILING RECEIPT

2292
BIRCH STEWART KOLASCH & BIRCH
PO BOX 747
FALLS CHURCH, VA 22040-0747

OC000000029316402

Date Mailed: 04/10/2008

Receipt is acknowledged of this provisional patent application. It will not be examined for patentability and will become abandoned not later than twelve months after its filing date. Any correspondence concerning the application must include the following identification information: the U.S. APPLICATION NUMBER, FILING DATE, NAME OF APPLICANT, and TITLE OF INVENTION. Fees transmitted by check or draft are subject to collection. Please verify the accuracy of the data presented on this receipt. **If an error is noted on this Filing Receipt, please write to the Office of Initial Patent Examination's Filing Receipt Corrections. Please provide a copy of this Filing Receipt with the changes noted thereon. If you received a "Notice to File Missing Parts" for this application, please submit any corrections to this Filing Receipt with your reply to the Notice. When the USPTO processes the reply to the Notice, the USPTO will generate another Filing Receipt incorporating the requested corrections**

Applicant(s)

Yasunori Moritani, Osaka-shi, JAPAN;
Kimihiro Shirai, Osaka-shi, JAPAN;
Mariko Oi, Osaka-shi, JAPAN;

Power of Attorney:
Gerald Murphy Jr--28977

If Required, Foreign Filing License Granted: 10/10/2006
The country code and number of your priority application, to be used for filing abroad under the Paris Convention, is **US 60/810,149**
Projected Publication Date: None, application is not eligible for pre-grant publication
Non-Publication Request: No
Early Publication Request: No
Title

Pyrazolo[1,5-a]pyrimidine compound

PROTECTING YOUR INVENTION OUTSIDE THE UNITED STATES

Since the rights granted by a U.S. patent extend only throughout the territory of the United States and have no effect in a foreign country, an inventor who wishes patent protection in another country must apply for a patent in a specific country or in regional patent offices. Applicants may wish to consider the filing of an international application under the Patent Cooperation Treaty (PCT). An international (PCT) application generally has the same effect as a regular national patent application in each PCT-member country. The PCT process **simplifies** the filing of patent applications on the same invention in member countries, but **does not result** in a grant of "an international

patent" and does not eliminate the need of applicants to file additional documents and fees in countries where patent protection is desired.

Almost every country has its own patent law, and a person desiring a patent in a particular country must make an application for patent in that country in accordance with its particular laws. Since the laws of many countries differ in various respects from the patent law of the United States, applicants are advised to seek guidance from specific foreign countries to ensure that patent rights are not lost prematurely.

Applicants also are advised that in the case of inventions made in the United States, the Director of the USPTO must issue a license before applicants can apply for a patent in a foreign country. The filing of a U.S. patent application serves as a request for a foreign filing license. The application's filing receipt contains further information and guidance as to the status of applicant's license for foreign filing.

Applicants may wish to consult the USPTO booklet, "General Information Concerning Patents" (specifically, the section entitled "Treaties and Foreign Patents") for more information on timeframes and deadlines for filing foreign patent applications. The guide is available either by contacting the USPTO Contact Center at 800-786-9199, or it can be viewed on the USPTO website at http://www.uspto.gov/web/offices/pac/doc/general/index.html.

For information on preventing theft of your intellectual property (patents, trademarks and copyrights), you may wish to consult the U.S. Government website, http://www.stopfakes.gov. Part of a Department of Commerce initiative, this website includes self-help "toolkits" giving innovators guidance on how to protect intellectual property in specific countries such as China, Korea and Mexico. For questions regarding patent enforcement issues, applicants may call the U.S. Government hotline at 1-866-999-HALT (1-866-999-4158).

LICENSE FOR FOREIGN FILING UNDER

Title 35, United States Code, Section 184

Title 37, Code of Federal Regulations, 5.11 & 5.15

GRANTED

The applicant has been granted a license under 35 U.S.C. 184, if the phrase "IF REQUIRED, FOREIGN FILING LICENSE GRANTED" followed by a date appears on this form. Such licenses are issued in all applications where the conditions for issuance of a license have been met, regardless of whether or not a license may be required as set forth in 37 CFR 5.15. The scope and limitations of this license are set forth in 37 CFR 5.15(a) unless an earlier license has been issued under 37 CFR 5.15(b). The license is subject to revocation upon written notification. The date indicated is the effective date of the license, unless an earlier license of similar scope has been granted under 37 CFR 5.13 or 5.14.

This license is to be retained by the licensee and may be used at any time on or after the effective date thereof unless it is revoked. This license is automatically transferred to any related applications(s) filed under 37 CFR 1.53(d). This license is not retroactive.

The grant of a license does not in any way lessen the responsibility of a licensee for the security of the subject matter as imposed by any Government contract or the provisions of existing laws relating to espionage and the national security or the export of technical data. Licensees should apprise themselves of current regulations especially with respect to certain countries, of other agencies, particularly the Office of Defense Trade Controls, Department of State (with respect to Arms, Munitions and Implements of War (22 CFR 121-128)); the Bureau of Industry and

Security, Department of Commerce (15 CFR parts 730-774); the Office of Foreign AssetsControl, Department of Treasury (31 CFR Parts 500+) and the Department of Energy.

NOT GRANTED

No license under 35 U.S.C. 184 has been granted at this time, if the phrase "IF REQUIRED, FOREIGN FILING LICENSE GRANTED" DOES NOT appear on this form. Applicant may still petition for a license under 37 CFR 5.12, if a license is desired before the expiration of 6 months from the filing date of the application. If 6 months has lapsed from the filing date of this application and the licensee has not received any indication of a secrecy order under 35 U.S.C. 181, the licensee may foreign file the application pursuant to 37 CFR 5.15(b).

UNITED STATES PATENT AND TRADEMARK OFFICE

Commissioner for Patents
United States Patent and Trademark Office
P.O. Box 1450
Alexandria, VA 22313-1450
www.uspto.gov

CHOATE, HALL & STEWART LLP
TWO INTERNATIONAL PLACE
BOSTON, MA 02110

COPY MAILED
OCT 1 2 2006
OFFICE OF PETITIONS

In re Application of	:	
Vernon Leon Alvarez	:	
Application No. 60/810,279	:	DECISION GRANTING PETITION
Filed: June 3, 2006	:	
Attorney Docket No. 2006636-0065	:	

This is a decision on the petition filed July 10, 2006, under 37 CFR 1.10(c) requesting that the above-cited application be accorded a filing date of June 3, 2006, rather than the presently accorded filing date of June 2, 2006.

Petitioner alleges that the application was deposited with the Express Mail Service on June 3, 2006. In support of the allegation, the petition is accompanied by a copy of the Express Mail postcard with a tracking number EV780262713US showing a "date-in" of June 3, 2006. The tracking number cited is the same number found on the application transmittal sheet that accompanied the original application papers. The evidence is convincing that the application papers were deposited on June 3, 2006.

In view of the above, the petition is granted. The new filing date for the above-cited application is June 3, 2006.

The Office of Initial Patent Examination will further process the application with a filing date of June 3, 2006, and issue a corrected filing receipt.

Any inquiries related to this decision should be directed to the undersigned at (571)272-3222.

Kenya A. McLaughlin
Petitions Attorney
Office of Petitions

UNITED STATES PATENT AND TRADEMARK OFFICE

Commissioner for Patents
United States Patent and Trademark Office
P.O. Box 1450
Alexandria, VA 22313-1450
www.uspto.gov

PFIZER INC
Steve T. Zelson
5TH FLOOR - STOP 49
150 EAST 42ND STREET
NEW YORK, NY 10017-5612

COPY MAILED

MAY 16 2008

OFFICE OF PETITIONS

In re Application of Gualberto et al. :
Application No. 60/810,811 :
Filing Date: June 2, 2006 :
Attorney Docket No. PC33353 :

Decision on Petition

This is a decision on the petition under 37 CFR 1.181, filed May 22, 2007, to withdraw the holding of abandonment.

The petition is **granted.**

Facts:

The cover sheet and Application Data Sheet (ADS) filed June 2, 2006, failed to include address information for several inventors.

The Office mailed a Notice to File Missing Parts on June 15, 2006. The Notice required the submission of a proper cover sheet, which could be in the form of an ADS, providing address information for all of the inventors.

The June 15, 2006 Notice set a two month period for reply.

The Office did not receive a reply to the June 15, 2006 Notice. As a result, a Notice of Abandonment was mailed February 23, 2007.

The instant petition was filed May 22, 2007.

Discussion:

Petitioner requests the Office withdraw the holding of abandonment.

The Office has considered the evidence provided by petitioner and is persuaded petitioner never received the June 15, 2006. Therefore, the application did not become abandoned on August 16, 2006.

The Notice of Abandonment mailed February 23, 2007, is hereby vacated.

Although the application did not become abandoned on August 16, 2006, the application did become abandoned on Tuesday, June 5, 2007.[1]

Office records will be changed to indicate the application became abandoned on June 5, 2007, rather than August 16, 2006.

A search of Office computer records fails to indicate petitioner has filed any nonprovisional applications claiming priority based on the instant provisional application. If any such applications have in fact been filed, the Office recommends petitioner file a new cover sheet, or ADS, in the instant application that includes the address information for all of the inventors.

Telephone inquiries regarding this communication should be directed to Petitions Attorney Steven Brantley at (571) 272-3203.

Charles Steven Brantley
Senior Petitions Attorney
Office of Petitions

[1] A provisional application will automatically be abandoned 12 months after its filing date and will not be subject to revival to restore it to pending status thereafter. See 35 U.S.C. 111(b)(5). If the date 12 months after the filing date is a Saturday, Sunday, or Federal holiday within the District of Columbia, the period of pendency is extended to the next secular or business day. See 35 U.S.C. 119(e)(3).

UNITED STATES PATENT AND TRADEMARK OFFICE

UNITED STATES DEPARTMENT OF COMMERCE
United States Patent and Trademark Office
Address: COMMISSIONER FOR PATENTS
P.O. Box 1450
Alexandria, Virginia 22313-1450
www.uspto.gov

APPL NO.	FILING OR 371 (c) DATE	ART UNIT	FIL FEE REC'D	ATTY.DOCKET NO	DRAWINGS	TOT CLMS	IND CLMS
60/811,039	06/05/2006		200	930111-2001.2	32		

CONFIRMATION NO. 1302

CORRECTED FILING RECEIPT

OC000000019640749

20999
FROMMER LAWRENCE & HAUG
745 FIFTH AVENUE- 10TH FL.
NEW YORK, NY 10151

Date Mailed: 07/17/2006

Receipt is acknowledged of this provisional Patent Application. It will not be examined for patentability and will become abandoned not later than twelve months after its filing date. Be sure to provide the U.S. APPLICATION NUMBER, FILING DATE, NAME OF APPLICANT, and TITLE OF INVENTION when inquiring about this application. Fees transmitted by check or draft are subject to collection. Please verify the accuracy of the data presented on this receipt. **If an error is noted on this Filing Receipt, please mail to the Commissioner for Patents P.O. Box 1450 Alexandria Va 22313-1450. Please provide a copy of this Filing Receipt with the changes noted thereon. If you received a "Notice to File Missing Parts" for this application, please submit any corrections to this Filing Receipt with your reply to the Notice. When the USPTO processes the reply to the Notice, the USPTO will generate another Filing Receipt incorporating the requested corrections (if appropriate).**

Applicant(s)

Luis Fernando Cabrera y Lopez Caram, Mexico City, MEXICO;

Power of Attorney:

Ronald Santucci–28988

If Required, Foreign Filing License Granted: 06/14/2006

The country code and number of your priority application, to be used for filing abroad under the Paris Convention, is US60/811,039

Projected Publication Date: None, application is not eligible for pre-grant publication

Non-Publication Request: Not applicable

Early-Publication Request: Not applicable

Title

Fiber mat forming apparatus and method of preserving the hydrodynamic processes needed to form a paper sheet

PROTECTING YOUR INVENTION OUTSIDE THE UNITED STATES

Since the rights granted by a U.S. patent extend only throughout the territory of the United States and have no effect in a foreign country, an inventor who wishes patent protection in another country must apply for a patent in a specific country or in regional patent offices. Applicants may wish to consider the filing of an international application under the Patent Cooperation Treaty (PCT). An international (PCT) application generally has the same effect as a regular national patent application in each PCT-member country. The PCT process **simplifies** the filing of patent applications on the same invention in member countries, but **does not result** in a grant of "an international patent" and does not eliminate the need of applicants to file additional documents and fees in countries where patent protection is desired.

Almost every country has its own patent law, and a person desiring a patent in a particular country must make an application for patent in that country in accordance with its particular laws. Since the laws of many countries differ in various respects from the patent law of the United States, applicants are advised to seek guidance from specific foreign countries to ensure that patent rights are not lost prematurely.

Applicants also are advised that in the case of inventions made in the United States, the Director of the USPTO must issue a license before applicants can apply for a patent in a foreign country. The filing of a U.S. patent application serves as a request for a foreign filing license. The application's filing receipt contains further information and guidance as to the status of applicant's license for foreign filing.

Applicants may wish to consult the USPTO booklet, "General Information Concerning Patents" (specifically, the section entitled "Treaties and Foreign Patents") for more information on timeframes and deadlines for filing foreign patent applications. The guide is available either by contacting the USPTO Contact Center at 800-786-9199, or it can be viewed on the USPTO website at http://www.uspto.gov/web/offices/pac/doc/general/index.html.

For information on preventing theft of your intellectual property (patents, trademarks and copyrights), you may wish to consult the U.S. Government website, http://www.stopfakes.gov. Part of a Department of Commerce initiative, this website includes self-help "toolkits" giving innovators guidance on how to protect intellectual property in specific countries such as China, Korea and Mexico. For questions regarding patent enforcement issues, applicants may call the U.S. Government hotline at 1-866-999-HALT (1-866-999-4158).

LICENSE FOR FOREIGN FILING UNDER
Title 35, United States Code, Section 184
Title 37, Code of Federal Regulations, 5.11 & 5.15

GRANTED

The applicant has been granted a license under 35 U.S.C. 184, if the phrase "IF REQUIRED, FOREIGN FILING LICENSE GRANTED" followed by a date appears on this form. Such licenses are issued in all applications where the conditions for issuance of a license have been met, regardless of whether or not a license may be required as set forth in 37 CFR 5.15. The scope and limitations of this license are set forth in 37 CFR 5.15(a) unless an earlier license has been issued under 37 CFR 5.15(b). The license is subject to revocation upon written notification. The date indicated is the effective date of the license, unless an earlier license of similar scope has been granted under 37 CFR 5.13 or 5.14.

This license is to be retained by the licensee and may be used at any time on or after the effective date thereof unless it is revoked. This license is automatically transferred to any related applications(s) filed under 37 CFR 1.53(d). This license is not retroactive.

The grant of a license does not in any way lessen the responsibility of a licensee for the security of the subject matter as imposed by any Government contract or the provisions of existing laws relating to espionage and the national security or the export of technical data. Licensees should apprise themselves of current regulations especially with respect to certain countries, of other agencies, particularly the Office of Defense Trade Controls, Department of State (with respect to Arms, Munitions and Implements of War (22 CFR 121-128)); the Bureau of Industry and Security, Department of Commerce (15 CFR parts 730-774); the Office of Foreign Assets Control, Department of Treasury (31 CFR Parts 500+) and the Department of Energy.

NOT GRANTED

No license under 35 U.S.C. 184 has been granted at this time, if the phrase "IF REQUIRED, FOREIGN FILING LICENSE GRANTED" DOES NOT appear on this form. Applicant may still petition for a license under 37 CFR 5.12, if a license is desired before the expiration of 6 months from the filing date of the application. If 6 months has lapsed from the filing date of this application and the licensee has not received any indication of a secrecy order under 35 U.S.C. 181, the licensee may foreign file the application pursuant to 37 CFR 5.15(b).

UNITED STATES PATENT AND TRADEMARK OFFICE

Commissioner for Patents
United States Patent and Trademark Office
P.O. Box 1450
Alexandria, VA 22313-1450
www.uspto.gov

DUGAN & DUGAN PC
55 SOUTH BROADWAY
TARRYTOWN, NY 10591

COPY MAILED

FEB 20 2007

OFFICE OF PETITIONS

In re Application of	:	
Donald J. K. Olgado et al	:	
Application No. 60/811,161	:	DECISION GRANTING
Filed: June 5, 2006	:	PETITION
Attorney Docket No.	:	
10859/L/PPC/CMP/CKIM		

This is a decision on the petition, filed July 18, 2006, requesting that the above-identified application be accorded a filing date of June 5, 2006, rather than the presently accorded date of June 6, 2006. The petition is properly treated as a petition under 37 CFR 1.10(c).

Petitioner alleges that the application was deposited in Express Mail Service on June 5, 2006. In support of this allegation, the petition is accompanied by a copy of Express Mail receipt No. EV605116378US (the same Express Mail number found on the original application papers located in the official file) showing a "date in" of June 5, 2006, as well as a USPS stamped receipt date of June 5, 2006.

The Office considers the date the paper or fee is shown to have been deposited as "Express Mail" to be the "date-in" on the Express Mail label; MPEP 513. The evidence is convincing that the application was deposited as "Express Mail" with the U. S. Postal Service on June 5, 2006.

In view of the above, the petition is **GRANTED**. Office records have been corrected to reflect that this application has been accorded a filing date of June 5, 2006. A corrected filing receipt has been mailed under separate cover.

No fee is due for the petition under 37 CFR 1.10(c). Accordingly, the $130 fee assessed to this petition will be credited in due course.

Telephone inquiries relating to this decision should be directed the undersigned at (571) 272-3218.

This application is referred to the Office of Initial Patent Examination for further processing with a filing date of June 5, 2006.

Frances Hicks
Petitions Examiner
Office of Petitions

UNITED STATES PATENT AND TRADEMARK OFFICE

UNITED STATES DEPARTMENT OF COMMERCE
United States Patent and Trademark Office
Address: COMMISSIONER FOR PATENTS
P.O. Box 1450
Alexandria, Virginia 22313-1450
www.uspto.gov

APPL NO.	FILING OR 371 (c) DATE	ART UNIT	FIL FEE REC'D	ATTY.DOCKET NO	DRAWINGS	TOT CLMS	IND CLMS
60/811,258	06/05/2006		100	50425/208	8		

CONFIRMATION NO. 3150

CORRECTED FILING RECEIPT

OC000000022578109

1912
AMSTER, ROTHSTEIN & EBENSTEIN LLP
90 PARK AVENUE
NEW YORK, NY 10016

Date Mailed: 02/21/2007

Receipt is acknowledged of this provisional Patent Application. It will not be examined for patentability and will become abandoned not later than twelve months after its filing date. Be sure to provide the U.S. APPLICATION NUMBER, FILING DATE, NAME OF APPLICANT, and TITLE OF INVENTION when inquiring about this application. Fees transmitted by check or draft are subject to collection. Please verify the accuracy of the data presented on this receipt. **If an error is noted on this Filing Receipt, please mail to the Commissioner for Patents P.O. Box 1450 Alexandria Va 22313-1450. Please provide a copy of this Filing Receipt with the changes noted thereon. If you received a "Notice to File Missing Parts" for this application, please submit any corrections to this Filing Receipt with your reply to the Notice. When the USPTO processes the reply to the Notice, the USPTO will generate another Filing Receipt incorporating the requested corrections (if appropriate).**

Applicant(s)

Yousef Al-Abed, New York, NY;

Power of Attorney:

Elie Gendloff--44704

If Required, Foreign Filing License Granted: 06/22/2006

The country code and number of your priority application, to be used for filing abroad under the Paris Convention, is US60/811,258

Projected Publication Date: None, application is not eligible for pre-grant publication

Non-Publication Request: Not applicable

Early-Publication Request: Not applicable

**** SMALL ENTITY ****

Title

Oxime derivatives as inhibitors of macrophage migration inhibitory factor

PROTECTING YOUR INVENTION OUTSIDE THE UNITED STATES

Since the rights granted by a U.S. patent extend only throughout the territory of the United States and have no effect in a foreign country, an inventor who wishes patent protection in another country must apply for a patent in a specific country or in regional patent offices. Applicants may wish to consider the filing of an international application under the Patent Cooperation Treaty (PCT). An international (PCT) application generally has the same effect as a regular national patent application in each PCT-member country. The PCT process **simplifies** the filing of patent applications on the same invention in member countries, but **does not result** in a grant of "an international patent" and does not eliminate the need of applicants to file additional documents and fees in countries where patent protection is desired.

Almost every country has its own patent law, and a person desiring a patent in a particular country must make an application for patent in that country in accordance with its particular laws. Since the laws of many countries differ in various respects from the patent law of the United States, applicants are advised to seek guidance from specific foreign countries to ensure that patent rights are not lost prematurely.

Applicants also are advised that in the case of inventions made in the United States, the Director of the USPTO must issue a license before applicants can apply for a patent in a foreign country. The filing of a U.S. patent application serves as a request for a foreign filing license. The application's filing receipt contains further information and guidance as to the status of applicant's license for foreign filing.

Applicants may wish to consult the USPTO booklet, "General Information Concerning Patents" (specifically, the section entitled "Treaties and Foreign Patents") for more information on timeframes and deadlines for filing foreign patent applications. The guide is available either by contacting the USPTO Contact Center at 800-786-9199, or it can be viewed on the USPTO website at http://www.uspto.gov/web/offices/pac/doc/general/index.html.

For information on preventing theft of your intellectual property (patents, trademarks and copyrights), you may wish to consult the U.S. Government website, http://www.stopfakes.gov. Part of a Department of Commerce initiative, this website includes self-help "toolkits" giving innovators guidance on how to protect intellectual property in specific countries such as China, Korea and Mexico. For questions regarding patent enforcement issues, applicants may call the U.S. Government hotline at 1-866-999-HALT (1-866-999-4158).

LICENSE FOR FOREIGN FILING UNDER
Title 35, United States Code, Section 184
Title 37, Code of Federal Regulations, 5.11 & 5.15

GRANTED

The applicant has been granted a license under 35 U.S.C. 184, if the phrase "IF REQUIRED, FOREIGN FILING LICENSE GRANTED" followed by a date appears on this form. Such licenses are issued in all applications where the conditions for issuance of a license have been met, regardless of whether or not a license may be required as set forth in 37 CFR 5.15. The scope and limitations of this license are set forth in 37 CFR 5.15(a) unless an earlier license has been issued under 37 CFR 5.15(b). The license is subject to revocation upon written notification. The date indicated is the effective date of the license, unless an earlier license of similar scope has been granted under 37 CFR 5.13 or 5.14.

This license is to be retained by the licensee and may be used at any time on or after the effective date thereof unless it is revoked. This license is automatically transferred to any related applications(s) filed under 37 CFR 1.53(d). This license is not retroactive.

The grant of a license does not in any way lessen the responsibility of a licensee for the security of the subject matter as imposed by any Government contract or the provisions of existing laws relating to espionage and the national security or the export of technical data. Licensees should apprise themselves of current regulations especially with respect to certain countries, of other agencies, particularly the Office of Defense Trade Controls, Department of State (with respect to Arms, Munitions and Implements of War (22 CFR 121-128)); the Bureau of

Industry and Security, Department of Commerce (15 CFR parts 730-774); the Office of Foreign Assets Control, Department of Treasury (31 CFR Parts 500+) and the Department of Energy.

NOT GRANTED

No license under 35 U.S.C. 184 has been granted at this time, if the phrase "IF REQUIRED, FOREIGN FILING LICENSE GRANTED" DOES NOT appear on this form. Applicant may still petition for a license under 37 CFR 5.12, if a license is desired before the expiration of 6 months from the filing date of the application. If 6 months has lapsed from the filing date of this application and the licensee has not received any indication of a secrecy order under 35 U.S.C. 181, the licensee may foreign file the application pursuant to 37 CFR 5.15(b).

UNITED STATES PATENT AND TRADEMARK OFFICE

UNITED STATES DEPARTMENT OF COMMERCE
United States Patent and Trademark Office
Address: COMMISSIONER FOR PATENTS
P.O. Box 1450
Alexandria, Virginia 22313-1450
www.uspto.gov

APPL NO.	FILING OR 371(c) DATE	ART UNIT	FIL FEE REC'D	ATTY.DOCKET NO	TOT CLMS	IND CLMS
60/811,292	06/05/2006		100	079719-010100/US		

CONFIRMATION NO. 3420

CORRECTED FILING RECEIPT

OC000000022996538

64494
GREENBERG TRAURIG, LLP (SV)
IP DOCKETING
2450 COLORADO AVENUE
SUITE 400E
SANTA MONICA, CA 90404

Date Mailed: 03/20/2007

Receipt is acknowledged of this provisional Patent Application. It will not be examined for patentability and will become abandoned not later than twelve months after its filing date. Be sure to provide the U.S. APPLICATION NUMBER, FILING DATE, NAME OF APPLICANT, and TITLE OF INVENTION when inquiring about this application. Fees transmitted by check or draft are subject to collection. Please verify the accuracy of the data presented on this receipt. **If an error is noted on this Filing Receipt, please mail to the Commissioner for Patents P.O. Box 1450 Alexandria Va 22313-1450. Please provide a copy of this Filing Receipt with the changes noted thereon. If you received a "Notice to File Missing Parts" for this application, please submit any corrections to this Filing Receipt with your reply to the Notice. When the USPTO processes the reply to the Notice, the USPTO will generate another Filing Receipt incorporating the requested corrections (if appropriate).**

Applicant(s)

Julie Lewis, San Mateo, CA;
Patricia Gardner, San Carlos, CA;
Dominik Kacprzak, San Jose, CA;

Power of Attorney:

John Ward--40216

If Required, Foreign Filing License Granted: 06/21/2006

The country code and number of your priority application, to be used for filing abroad under the Paris Convention, is US60/811,292

Projected Publication Date: None, application is not eligible for pre-grant publication

Non-Publication Request: Not applicable

Early-Publication Request: Not applicable

**** SMALL ENTITY ****

Title

Method and apparatus for displaying and editing heterogeneous data

PROTECTING YOUR INVENTION OUTSIDE THE UNITED STATES

Since the rights granted by a U.S. patent extend only throughout the territory of the United States and have no effect in a foreign country, an inventor who wishes patent protection in another country must apply for a patent in a specific country or in regional patent offices. Applicants may wish to consider the filing of an international application under the Patent Cooperation Treaty (PCT). An international (PCT) application generally has the same effect as a regular national patent application in each PCT-member country. The PCT process **simplifies** the filing of patent applications on the same invention in member countries, but **does not result** in a grant of "an international patent" and does not eliminate the need of applicants to file additional documents and fees in countries where patent protection is desired.

Almost every country has its own patent law, and a person desiring a patent in a particular country must make an application for patent in that country in accordance with its particular laws. Since the laws of many countries differ in various respects from the patent law of the United States, applicants are advised to seek guidance from specific foreign countries to ensure that patent rights are not lost prematurely.

Applicants also are advised that in the case of inventions made in the United States, the Director of the USPTO must issue a license before applicants can apply for a patent in a foreign country. The filing of a U.S. patent application serves as a request for a foreign filing license. The application's filing receipt contains further information and guidance as to the status of applicant's license for foreign filing.

Applicants may wish to consult the USPTO booklet, "General Information Concerning Patents" (specifically, the section entitled "Treaties and Foreign Patents") for more information on timeframes and deadlines for filing foreign patent applications. The guide is available either by contacting the USPTO Contact Center at 800-786-9199, or it can be viewed on the USPTO website at http://www.uspto.gov/web/offices/pac/doc/general/index.html.

For information on preventing theft of your intellectual property (patents, trademarks and copyrights), you may wish to consult the U.S. Government website, http://www.stopfakes.gov. Part of a Department of Commerce initiative, this website includes self-help "toolkits" giving innovators guidance on how to protect intellectual property in specific countries such as China, Korea and Mexico. For questions regarding patent enforcement issues, applicants may call the U.S. Government hotline at 1-866-999-HALT (1-866-999-4158).

LICENSE FOR FOREIGN FILING UNDER
Title 35, United States Code, Section 184
Title 37, Code of Federal Regulations, 5.11 & 5.15

GRANTED

The applicant has been granted a license under 35 U.S.C. 184, if the phrase "IF REQUIRED, FOREIGN FILING LICENSE GRANTED" followed by a date appears on this form. Such licenses are issued in all applications where the conditions for issuance of a license have been met, regardless of whether or not a license may be required as set forth in 37 CFR 5.15. The scope and limitations of this license are set forth in 37 CFR 5.15(a) unless an earlier license has been issued under 37 CFR 5.15(b). The license is subject to revocation upon written notification. The date indicated is the effective date of the license, unless an earlier license of similar scope has been granted under 37 CFR 5.13 or 5.14.

This license is to be retained by the licensee and may be used at any time on or after the effective date thereof unless it is revoked. This license is automatically transferred to any related applications(s) filed under 37 CFR 1.53(d). This license is not retroactive.

The grant of a license does not in any way lessen the responsibility of a licensee for the security of the subject

matter as imposed by any Government contract or the provisions of existing laws relating to espionage and the national security or the export of technical data. Licensees should apprise themselves of current regulations especially with respect to certain countries, of other agencies, particularly the Office of Defense Trade Controls, Department of State (with respect to Arms, Munitions and Implements of War (22 CFR 121-128)); the Bureau of Industry and Security, Department of Commerce (15 CFR parts 730-774); the Office of Foreign Assets Control, Department of Treasury (31 CFR Parts 500+) and the Department of Energy.

NOT GRANTED

No license under 35 U.S.C. 184 has been granted at this time, if the phrase "IF REQUIRED, FOREIGN FILING LICENSE GRANTED" DOES NOT appear on this form. Applicant may still petition for a license under 37 CFR 5.12, if a license is desired before the expiration of 6 months from the filing date of the application. If 6 months has lapsed from the filing date of this application and the licensee has not received any indication of a secrecy order under 35 U.S.C. 181, the licensee may foreign file the application pursuant to 37 CFR 5.15(b).

UNITED STATES PATENT AND TRADEMARK OFFICE

Commissioner for Patents
United States Patent and Trademark Office
P.O. Box 1450
Alexandria, VA 22313-1450
www.uspto.gov

MORGAN, LEWIS & BOCKIUS, LLP.
2 PALO ALTO SQUARE
3000 EL CAMINO REAL
PALO ALTO CA 94306

COPY MAILED

MAR 30 2007

OFFICE OF PETITIONS
ON PETITION

In re Application of :
Beekley, et al. :
Application No. 60/811,317 :
Filed: June 5, 2006 :
Attorney Docket No. 066823-5002-PR :
For: THERMALLY ENHANCED
MEMORY MODULE

This is a decision on the petition under 37 CFR 1.137(a), filed March 8, 2007, and the petition under 37 CFR 1.137(b), filed March 19, 2007, to revive the above-identified application.

The petition under 37 CFR 1.137(b) is **GRANTED**.

The petition under 37 CFR 1.137(a) is **DISMISSED AS MOOT**.

This application became abandoned for failure to timely reply to the Notice to File Missing Parts of Provisional Application mailed June 15, 2006, which set a two month shortened statutory period for reply. No extensions of time having been obtained pursuant to 37 CFR 1.136(a) and no reply being received in the Office, this application became abandoned on August 16, 2006. A Notice of Abandonment was mailed on February 23, 2007.

Applicants have submitted a proper reply to the June 15, 2006 Notice in the form of an ADS and a surcharge, an acceptable statement of the unintentional nature of the delay in responding to the June 15, 2006 Notice, and the petition fee. Accordingly, the petition under 37 CFR 1.137(b) is granted.

Petitioners requested that the Office not consider the petition under 37 CFR 1.137(a), filed on March 8, 2007, on the first page of the petition under 37 CFR 1.137(b), filed on March 19, 2007. Therefore, the petition under 37 CFR 1.137(a) is dismissed as moot and the petition fee will be credited to deposit account no. 50-0310.

After the mailing of this decision, the file will be returned to the Office of Initial Patent Examination for further processing.

Telephone inquiries concerning this matter may be directed to the undersigned at (571) 272-3230.

Shirene Willis Brantley

Shirene Willis Brantley
Senior Petitions Attorney
Office of Petitions

UNITED STATES PATENT AND TRADEMARK OFFICE

COMMISSIONER FOR PATENTS
UNITED STATES PATENT AND TRADEMARK OFFICE
P.O. BOX 1450
ALEXANDRIA, VA 22313-1450
www.uspto.gov

MCNEELY BODENDORF LLP
P.O. BOX 19010
WASHINGTON, DC 20036

COPY MAILED

OCT 24 2007

OFFICE OF PETITIONS

In re Application of :
Michael Y. Huang :
Application No. 60/811,424 : DECISION ON PETITION
Filed: June 7, 2006 :
Attorney Docket No. HUANG-001P01 :

This is a decision on the petition under 37 CFR 1.182, filed June 6, 2007, to correct the name of inventor "Michael Y. Huang" to – Yuanlin Huang --.

The petition is **GRANTED**.

Office records have been updated to reflect the correction of the inventor's name. A corrected Filing Receipt, which reflects the inventor's name, accompanies this decision on petition.

As authorized, the $400 fee for the petition under 37 CFR 1.182 has been assessed to petitioner's deposit account.

Any questions concerning this matter may be directed to the undersigned at (571) 272-3204.

Sherry D. Brinkley
Petitions Examiner
Office of Petitions

ATTACHMENT: Corrected Filing Receipt

UNITED STATES PATENT AND TRADEMARK OFFICE

UNITED STATES DEPARTMENT OF COMMERCE
United States Patent and Trademark Office
Address: COMMISSIONER FOR PATENTS
P.O. Box 1450
Alexandria, Virginia 22313-1450
www.uspto.gov

APPLICATION NUMBER	FILING or 371(c) DATE	GRP ART UNIT	FIL FEE REC'D	ATTY.DOCKET.NO	TOT CLAIMS	IND CLAIMS
60/811,424	06/07/2006		100	HUANG-001P01		

CONFIRMATION NO. 2992

CORRECTED FILING RECEIPT

48356
MCNEELY BODENDORF LLP
P.O. BOX 19010
WASHINGTON, DC 20036

OC000000026341316

Date Mailed: 10/19/2007

Receipt is acknowledged of this provisional patent application. It will not be examined for patentability and will become abandoned not later than twelve months after its filing date. Any correspondence concerning the application must include the following identification information: the U.S. APPLICATION NUMBER, FILING DATE, NAME OF APPLICANT, and TITLE OF INVENTION. Fees transmitted by check or draft are subject to collection. Please verify the accuracy of the data presented on this receipt. **If an error is noted on this Filing Receipt, please write to the Office of Initial Patent Examination's Filing Receipt Corrections. Please provide a copy of this Filing Receipt with the changes noted thereon. If you received a "Notice to File Missing Parts" for this application, please submit any corrections to this Filing Receipt with your reply to the Notice. When the USPTO processes the reply to the Notice, the USPTO will generate another Filing Receipt incorporating the requested corrections**

Applicant(s)

Yuanlin Huang, Sterling, VA;

Power of Attorney:
Andrew Bodendorf--39537

If Required, Foreign Filing License Granted: 06/23/2006

The country code and number of your priority application, to be used for filing abroad under the Paris Convention, is **US 60/811,424**

Projected Publication Date: None, application is not eligible for pre-grant publication

Non-Publication Request: No

Early Publication Request: No
**** SMALL ENTITY ****
Title

RFID based parking management

PROTECTING YOUR INVENTION OUTSIDE THE UNITED STATES

Since the rights granted by a U.S. patent extend only throughout the territory of the United States and have no effect in a foreign country, an inventor who wishes patent protection in another country must apply for a patent in a specific country or in regional patent offices. Applicants may wish to consider the filing of an international application under the Patent Cooperation Treaty (PCT). An international (PCT) application generally has the same effect as a regular national patent application in each PCT-member country. The PCT process **simplifies** the filing of patent applications on the same invention in member countries, but **does not result** in a grant of "an international

patent" and does not eliminate the need of applicants to file additional documents and fees in countries where patent protection is desired.

Almost every country has its own patent law, and a person desiring a patent in a particular country must make an application for patent in that country in accordance with its particular laws. Since the laws of many countries differ in various respects from the patent law of the United States, applicants are advised to seek guidance from specific foreign countries to ensure that patent rights are not lost prematurely.

Applicants also are advised that in the case of inventions made in the United States, the Director of the USPTO must issue a license before applicants can apply for a patent in a foreign country. The filing of a U.S. patent application serves as a request for a foreign filing license. The application's filing receipt contains further information and guidance as to the status of applicant's license for foreign filing.

Applicants may wish to consult the USPTO booklet, "General Information Concerning Patents" (specifically, the section entitled "Treaties and Foreign Patents") for more information on timeframes and deadlines for filing foreign patent applications. The guide is available either by contacting the USPTO Contact Center at 800-786-9199, or it can be viewed on the USPTO website at http://www.uspto.gov/web/offices/pac/doc/general/index.html.

For information on preventing theft of your intellectual property (patents, trademarks and copyrights), you may wish to consult the U.S. Government website, http://www.stopfakes.gov. Part of a Department of Commerce initiative, this website includes self-help "toolkits" giving innovators guidance on how to protect intellectual property in specific countries such as China, Korea and Mexico. For questions regarding patent enforcement issues, applicants may call the U.S. Government hotline at 1-866-999-HALT (1-866-999-4158).

LICENSE FOR FOREIGN FILING UNDER

Title 35, United States Code, Section 184

Title 37, Code of Federal Regulations, 5.11 & 5.15

GRANTED

The applicant has been granted a license under 35 U.S.C. 184, if the phrase "IF REQUIRED, FOREIGN FILING LICENSE GRANTED" followed by a date appears on this form. Such licenses are issued in all applications where the conditions for issuance of a license have been met, regardless of whether or not a license may be required as set forth in 37 CFR 5.15. The scope and limitations of this license are set forth in 37 CFR 5.15(a) unless an earlier license has been issued under 37 CFR 5.15(b). The license is subject to revocation upon written notification. The date indicated is the effective date of the license, unless an earlier license of similar scope has been granted under 37 CFR 5.13 or 5.14.

This license is to be retained by the licensee and may be used at any time on or after the effective date thereof unless it is revoked. This license is automatically transferred to any related applications(s) filed under 37 CFR 1.53(d). This license is not retroactive.

The grant of a license does not in any way lessen the responsibility of a licensee for the security of the subject matter as imposed by any Government contract or the provisions of existing laws relating to espionage and the national security or the export of technical data. Licensees should apprise themselves of current regulations especially with respect to certain countries, of other agencies, particularly the Office of Defense Trade Controls, Department of State (with respect to Arms, Munitions and Implements of War (22 CFR 121-128)); the Bureau of Industry and

Security, Department of Commerce (15 CFR parts 730-774); the Office of Foreign AssetsControl, Department of Treasury (31 CFR Parts 500+) and the Department of Energy.

NOT GRANTED

No license under 35 U.S.C. 184 has been granted at this time, if the phrase "IF REQUIRED, FOREIGN FILING LICENSE GRANTED" DOES NOT appear on this form. Applicant may still petition for a license under 37 CFR 5.12, if a license is desired before the expiration of 6 months from the filing date of the application. If 6 months has lapsed from the filing date of this application and the licensee has not received any indication of a secrecy order under 35 U.S.C. 181, the licensee may foreign file the application pursuant to 37 CFR 5.15(b).

UNITED STATES PATENT AND TRADEMARK OFFICE

Commissioner for Patents
United States Patent and Trademark Office
P.O. Box 1450
Alexandria, VA 22313-1450
www.uspto.gov

TOWNSEND AND TOWNSEND AND CREW LLP
TWO EMBARCADERO CENTER, EIGHTH FLOOR
SAN FRANCISCO, CA 94111-3834

COPY MAILED

FEB 2 0 2007

OFFICE OF PETITIONS

In re Application of	:	
David A. Hinds et al	:	
Application No. 60/811,465	:	DECISION GRANTING
Filed: June 5, 2006	:	PETITION
Attorney Docket No. 020654-001800US	:	

This is a decision on the petition, filed July 12 2006, requesting that the above-identified application be accorded a filing date of June 5, 2006, rather than the presently accorded date of June 6, 2006. The petition is properly treated as a petition under 37 CFR 1.10(c).

Petitioner alleges that the application was deposited in Express Mail Service on June 5, 2006. In support of this allegation, the petition is accompanied by a copy of Express Mail receipt No. EV656871733US (the same Express Mail number found on the original application papers located in the official file) showing a "date in" of June 5, 2006, as well as a USPS stamped receipt date of June 5, 2006, and a USPS track confirm record which discloses that the Express Mail package in question was accepted at the San Francisco, CA, USPS on June 5, 2006.

The Office considers the date the paper or fee is shown to have been deposited as "Express Mail" to be the "date-in" on the Express Mail label; MPEP 513. The evidence is convincing that the application was deposited as "Express Mail" with the U. S. Postal Service on June 5, 2006.

In view of the above, the petition is **GRANTED**. This application file is being referred to the Office of Initial Patent Examination for processing with a filing date of **June 5, 2006** and for mailing of a corrected Filing Receipt.

Telephone inquiries relating to this decision should be directed the undersigned at (571) 272-3218.

Frances Hicks
Petitions Examiner
Office of Petitions

UNITED STATES PATENT AND TRADEMARK OFFICE

Commissioner for Patents
United States Patent and Trademark Office
P.O. Box 1450
Alexandria, VA 22313-1450
www.uspto.gov

Womble Carlyle Sandridge & Rice, PLLC
Attn: Patent Docketing 32nd Floor
P.O. Box 7037
Atlanta, GA 30357-0037

COPY MAILED
OCT 1 0 2006
OFFICE OF PETITIONS

In re Application of :
Lee Schilling :
Application No. 60/811,705 : ON PETITION
Filed: June 7, 2006 :
Attorney Docket No. C245 1180.P1 :

This is a decision on the petition filed July 10, 2006, requesting that the above-identified application be accorded a filing date of June 7, 2006, rather than the presently accorded filing date of June 6, 2006.

Petitioner asserts the above-identified application was deposited with the United States Postal Service (USPS) using "Express Mail Service" on June 7, 2006. A copy of Express Mail label No. EV641490089US accompanies the petition. Although the "date-in" indicated on the Express Mail label is June 6, 2006, the label contains a USPS stamp of June 7, 2006. Additionally, petitioner submits a USPS Track & Confirm receipt, indicating that the USPS accepted a package bearing Express Mail label No. EV641490089US on June 7, 2006, at 4:50 P.M. in Atlanta, Georgia, 30309. The same Express Mail label number was placed on the original application papers located in the official file.

Accordingly, the petition is **granted**.

The Office of Initial Patent Examination is directed to correct the filing date of the above-identified application to June 7, 2006, and to mail a corrected filing receipt.

Telephone inquiries regarding this matter should be directed to the undersigned at (571) 272-3211.

Christina Tartera Donnell

Christina Tartera Donnell
Senior Petitions Attorney
Office of Petitions

UNITED STATES PATENT AND TRADEMARK OFFICE

UNITED STATES DEPARTMENT OF COMMERCE
United States Patent and Trademark Office
Address: COMMISSIONER FOR PATENTS
P.O. Box 1450
Alexandria, Virginia 22313-1450
www.uspto.gov

APPL NO.	FILING OR 371 (c) DATE	ART UNIT	FIL FEE REC'D	ATTY.DOCKET NO	DRAWINGS	TOT CLMS	IND CLMS
60/811,899	06/07/2006		100	89188.0156	6		

CONFIRMATION NO. 7024

CORRECTED FILING RECEIPT

OC000000021957294

26021
HOGAN & HARTSON L.L.P.
1999 AVENUE OF THE STARS
SUITE 1400
LOS ANGELES, CA 90067

Date Mailed: 01/11/2007

Receipt is acknowledged of this provisional Patent Application. It will not be examined for patentability and will become abandoned not later than twelve months after its filing date. Be sure to provide the U.S. APPLICATION NUMBER, FILING DATE, NAME OF APPLICANT, and TITLE OF INVENTION when inquiring about this application. Fees transmitted by check or draft are subject to collection. Please verify the accuracy of the data presented on this receipt. **If an error is noted on this Filing Receipt, please mail to the Commissioner for Patents P.O. Box 1450 Alexandria Va 22313-1450. Please provide a copy of this Filing Receipt with the changes noted thereon. If you received a "Notice to File Missing Parts" for this application, please submit any corrections to this Filing Receipt with your reply to the Notice. When the USPTO processes the reply to the Notice, the USPTO will generate another Filing Receipt incorporating the requested corrections (if appropriate).**

Applicant(s)

John Tower, Los Angeles, CA;

Power of Attorney:

Lawrence McClure--44228

If Required, Foreign Filing License Granted: 07/07/2006

The country code and number of your priority application, to be used for filing abroad under the Paris Convention, is US60/811,899

Projected Publication Date: None, application is not eligible for pre-grant publication

Non-Publication Request: Not applicable

Early-Publication Request: Not applicable

****SMALL ENTITY ****

Title

Sex-specific regulation of aging and apoptosis

PROTECTING YOUR INVENTION OUTSIDE THE UNITED STATES

Since the rights granted by a U.S. patent extend only throughout the territory of the United States and have no effect in a foreign country, an inventor who wishes patent protection in another country must apply for a patent in a specific country or in regional patent offices. Applicants may wish to consider the filing of an international application under the Patent Cooperation Treaty (PCT). An international (PCT) application generally has the same effect as a regular national patent application in each PCT-member country. The PCT process **simplifies** the filing of patent applications on the same invention in member countries, but **does not result** in a grant of "an international patent" and does not eliminate the need of applicants to file additional documents and fees in countries where patent protection is desired.

Almost every country has its own patent law, and a person desiring a patent in a particular country must make an application for patent in that country in accordance with its particular laws. Since the laws of many countries differ in various respects from the patent law of the United States, applicants are advised to seek guidance from specific foreign countries to ensure that patent rights are not lost prematurely.

Applicants also are advised that in the case of inventions made in the United States, the Director of the USPTO must issue a license before applicants can apply for a patent in a foreign country. The filing of a U.S. patent application serves as a request for a foreign filing license. The application's filing receipt contains further information and guidance as to the status of applicant's license for foreign filing.

Applicants may wish to consult the USPTO booklet, "General Information Concerning Patents" (specifically, the section entitled "Treaties and Foreign Patents") for more information on timeframes and deadlines for filing foreign patent applications. The guide is available either by contacting the USPTO Contact Center at 800-786-9199, or it can be viewed on the USPTO website at http://www.uspto.gov/web/offices/pac/doc/general/index.html.

For information on preventing theft of your intellectual property (patents, trademarks and copyrights), you may wish to consult the U.S. Government website, http://www.stopfakes.gov. Part of a Department of Commerce initiative, this website includes self-help "toolkits" giving innovators guidance on how to protect intellectual property in specific countries such as China, Korea and Mexico. For questions regarding patent enforcement issues, applicants may call the U.S. Government hotline at 1-866-999-HALT (1-866-999-4158).

LICENSE FOR FOREIGN FILING UNDER
Title 35, United States Code, Section 184
Title 37, Code of Federal Regulations, 5.11 & 5.15

GRANTED

The applicant has been granted a license under 35 U.S.C. 184, if the phrase "IF REQUIRED, FOREIGN FILING LICENSE GRANTED" followed by a date appears on this form. Such licenses are issued in all applications where the conditions for issuance of a license have been met, regardless of whether or not a license may be required as set forth in 37 CFR 5.15. The scope and limitations of this license are set forth in 37 CFR 5.15(a) unless an earlier license has been issued under 37 CFR 5.15(b). The license is subject to revocation upon written notification. The date indicated is the effective date of the license, unless an earlier license of similar scope has been granted under 37 CFR 5.13 or 5.14.

This license is to be retained by the licensee and may be used at any time on or after the effective date thereof unless it is revoked. This license is automatically transferred to any related applications(s) filed under 37 CFR 1.53(d). This license is not retroactive.

The grant of a license does not in any way lessen the responsibility of a licensee for the security of the subject matter as imposed by any Government contract or the provisions of existing laws relating to espionage and the national security or the export of technical data. Licensees should apprise themselves of current regulations especially with respect to certain countries, of other agencies, particularly the Office of Defense Trade Controls,

Department of State (with respect to Arms, Munitions and Implements of War (22 CFR 121-128)); the Bureau of Industry and Security, Department of Commerce (15 CFR parts 730-774); the Office of Foreign Assets Control, Department of Treasury (31 CFR Parts 500+) and the Department of Energy.

NOT GRANTED

No license under 35 U.S.C. 184 has been granted at this time, if the phrase "IF REQUIRED, FOREIGN FILING LICENSE GRANTED" DOES NOT appear on this form. Applicant may still petition for a license under 37 CFR 5.12, if a license is desired before the expiration of 6 months from the filing date of the application. If 6 months has lapsed from the filing date of this application and the licensee has not received any indication of a secrecy order under 35 U.S.C. 181, the licensee may foreign file the application pursuant to 37 CFR 5.15(b).

UNITED STATES PATENT AND TRADEMARK OFFICE

Commissioner for Patents
United States Patent and Trademark Office
P.O. Box 1450
Alexandria, VA 22313-1450
www.uspto.gov

John W. Goldschmidt, Jr. Esquire
Dilworth Paxon LLP
3200 Mellon Bank Center
1735 Market Street
Philadelphia, PA 19103

COPY MAILED
OCT 1 0 2006
OFFICE OF PETITIONS

In re Application of	:	
Julie G. Allickson	:	
Application No. 60/811,935	:	ON PETITION
Filed: June 7, 2006	:	
Attorney Docket No. 06-1042	:	

This is a decision on the petition under 37 CFR 1.53(e), filed September 22, 2006, requesting that the above-identified application be accorded a filing date of June 7, 2006.

On June 7, 2006, applicant deposited the above-identified application. On July 19, 2006, the Office mailed a Notice of Incomplete Provisional Application, stating that the application was deposited without a specification and that the filing date would be the date of receipt of the omitted item.

In response, on September 22, 2006, applicant submitted the present petition, 12 pages of specification, and an authorization to charge the Deposit Account for the petition fee. Additionally, applicant provided a copy of a returned, date-stamped postcard receipt, acknowledging receipt of "Specification (12 pages)" in the United States Patent and Trademark Office (USPTO) on June 7, 2006.

Upon review of the record, the 12 pages of specification, deposited on June 7, 2006, have not been located among the application papers. However, the evidence is convincing that the application papers deposited on June 7, 2006, contained 12 pages of specification, which were subsequently misplaced in the USPTO. Therefore, the application, including the 12 pages of specification, was complete on filing and will be granted a filing date of June 7, 2006.

Accordingly, the petition is **granted**.

The Notice of Incomplete Provisional Application was sent in error and is hereby vacated. Thus, the petition fee is unnecessary and will be refunded to the Deposit Account.

The Office of Initial Patent Examination is directed **to accord the above-identified application a filing date of June 7, 2006,** using the 12 pages of specification submitted on September 22, 2006, as part of the original disclosure, and to mail a filing receipt.

Any inquiries related to this decision should be directed to the undersigned at (571) 272-3211.

Christina Tartera Donnell

Christina Tartera Donnell
Senior Petitions Attorney
Office of Petitions

UNITED STATES PATENT AND TRADEMARK OFFICE

COMMISSIONER FOR PATENTS
UNITED STATES PATENT AND TRADEMARK OFFICE
P.O. BOX 1450
ALEXANDRIA, VA 22313-1450
www.uspto.gov

JOHN V. BIERNACKI
JONES DAY
NORTH POINT
901 LAKESIDE AVENUE
CLEVELAND, OH 44114

COPY MAILED

MAY 18 2007

OFFICE OF PETITIONS

In re Application of
Martin J. Bartel, et al.
Application No. 60/812,023
Filed: June 8, 2006
Attorney Docket No. 300363-620001

ON PETITION

This is a decision in response to the petition under 37 CFR 1.182, filed May 4, 2007, requesting expedited consideration of the petition filed March 16, 2007 to revive the above-identified application under the provisions of 37 CFR 1.137(b).

The petition under 37 CFR 1.182 is **GRANTED**. A decision on the petition under 37 CFR 1.137(b) follows.

A review of the record discloses that the application became abandoned for a failure to reply in a timely manner to the Notice to File Missing Parts of Provisional Application (Notice), mailed June 26, 2006. The Notice set a period for reply of two (2) months from the mail date of the Notice. It is noted that on February 27, 2007, a response was filed with an untimely 5-month petition for extension of time. Consequently, on March 12, 2007 A Notice of Abandonment was mailed. In response, on March 16, 2007, the petition under 37 CFR 1.137 was filed.

The petition satisfies the requirements of 37 CFR 1.137(b) in that petitioner has supplied (1) the reply in the form of a corrected provisional application cover sheet under 37 CFR 1.51(c)(1) and payment of the fee required under 37 CFR 1.16(g) of $50; (2) the petition fee of $1,500; and (3) a proper statement of unintentional delay.

Extensions of time under 37 CFR 1.136 are available only if asked for prior to or within the response period set by statute. In no case, however, may an applicant respond later than the maximum time period set by statute. The extension of time submitted February 27, 2006 was filed when the provisions of 37 CFR 1.136 could no longer be used. The latest date the 5-month extension of time could have been accepted was January 26, 2007. Therefore, this application became abandoned when the unextended time for response had expired, i.e., August 26, 2006. Since no extension of time fees are due as a condition for revival, the extension fees submitted after abandonment are being credited to counsel's deposit account.

The application is being referred to the Office of Initial Patent Examination (OIPE) for further processing.

Telephone inquires related to this decision should be directed to the undersigned at (571) 272-3204. Telephone inquiries related to OIPE processing should be directed to their hotline at (571) 272-4000.

Sherry D. Brinkley
Petitions Examiner
Office of Petitions

UNITED STATES PATENT AND TRADEMARK OFFICE

Commissioner for Patents
United States Patent and Trademark Office
P.O. Box 1450
Alexandria, VA 22313-1450
www.uspto.gov

Paper No.

HARNESS, DICKEY & PIERCE P.L.C.
5445 CORPORATE DRIVE
SUITE 400
TROY MI 48098

COPY MAILED
OCT 0 2 2006
OFFICE OF PETITIONS

In re Application of	:	
Zhang et al.	:	DECISION ON
Application No. 60/812,452	:	PETITION
Filed: June 9, 2006	:	
Atty Docket No. MP1147PR2	:	

This is in response to the "PETITION FOR ACCORDANCE OF FILING DATE," filed August 30, 2006.

Application papers in the above-identified provisional application were deposited on June 9, 2006. However, on June 30, 2006, the Initial Patent Examination Division (IPED) mailed a "Notice of Incomplete Provisional Application," notifying applicants that the provisional application papers had not been accorded a filing date because the application was deposited without drawings.

In response, applicants timely filed the instant petition (and petition fee). Applicants submit that the drawings are not necessary for the understanding of the subject matter to be patented.

A review of the specification reveals that it refers to drawing figures, but no drawings were in the application-as-filed. It has been USPTO practice to treat an application that contains at least one process or method claim as an application for which a drawing is not necessary for an understanding of the invention under 35 U.S.C. 113 (first sentence). See MPEP 601.01(f). However, the instant application has no claims. Thus, it was proper for the Office to mail a Notice of Incomplete Provisional Application. Nonetheless, in view of petitioner's contention

that drawings are not necessary, it is concluded that this provisional application is entitled to a filing date.

In view thereof, the petition is **GRANTED**.

The Office of Initial Patent Examination (OIPE) has been advised of this decision. OIPE will **correct the filing date to June 9, 2006, with "0" drawings present in the application**.

Applicants will receive appropriate notifications regarding the fees owed, if any, and other information in due course from OIPE.

Telephone inquiries related to this decision may be directed to the undersigned at (571) 272-3219.

Nancy Johnson
Senior Petitions Attorney
Office of Petitions

UNITED STATES PATENT AND TRADEMARK OFFICE

UNITED STATES DEPARTMENT OF COMMERCE
United States Patent and Trademark Office
Address: COMMISSIONER FOR PATENTS
P.O. Box 1450
Alexandria, Virginia 22313-1450
www.uspto.gov

APPL NO.	FILING OR 371 (c) DATE	ART UNIT	FIL FEE REC'D	ATTY.DOCKET NO	DRAWINGS	TOT CLMS	IND CLMS
60/812,549	06/08/2006		100	30008-506 PRO	11		

CONFIRMATION NO. 9101

CORRECTED FILING RECEIPT

OC000000020531920

MINTZ, LEVIN, COHN, FERRIS
GLOVSKY AND POPEO, P.C.
CHRYSLER CENTER
666 Third Avenue, 24th Floor
New York, NY 10017

Date Mailed: 09/21/2006

Receipt is acknowledged of this provisional Patent Application. It will not be examined for patentability and will become abandoned not later than twelve months after its filing date. Be sure to provide the U.S. APPLICATION NUMBER, FILING DATE, NAME OF APPLICANT, and TITLE OF INVENTION when inquiring about this application. Fees transmitted by check or draft are subject to collection. Please verify the accuracy of the data presented on this receipt. **If an error is noted on this Filing Receipt, please mail to the Commissioner for Patents P.O. Box 1450 Alexandria Va 22313-1450. Please provide a copy of this Filing Receipt with the changes noted thereon. If you received a "Notice to File Missing Parts" for this application, please submit any corrections to this Filing Receipt with your reply to the Notice. When the USPTO processes the reply to the Notice, the USPTO will generate another Filing Receipt incorporating the requested corrections (if appropriate).**

Applicant(s)

Ofer Yodfat, Maccabim-Reut, ISRAEL;

Power of Attorney:

Brian Hopkins--42669
Boris Matvenko--48165

If Required, Foreign Filing License Granted: 06/29/2006

The country code and number of your priority application, to be used for filing abroad under the Paris Convention, is US60/812,549

Projected Publication Date: None, application is not eligible for pre-grant publication

Non-Publication Request: Not applicable

Early-Publication Request: Not applicable

**** SMALL ENTITY ****

Title

Method for detecting occlusion in a tube

PROTECTING YOUR INVENTION OUTSIDE THE UNITED STATES

Since the rights granted by a U.S. patent extend only throughout the territory of the United States and have no effect in a foreign country, an inventor who wishes patent protection in another country must apply for a patent in a specific country or in regional patent offices. Applicants may wish to consider the filing of an international application under the Patent Cooperation Treaty (PCT). An international (PCT) application generally has the same effect as a regular national patent application in each PCT-member country. The PCT process **simplifies** the filing of patent applications on the same invention in member countries, but **does not result** in a grant of "an international patent" and does not eliminate the need of applicants to file additional documents and fees in countries where patent protection is desired.

Almost every country has its own patent law, and a person desiring a patent in a particular country must make an application for patent in that country in accordance with its particular laws. Since the laws of many countries differ in various respects from the patent law of the United States, applicants are advised to seek guidance from specific foreign countries to ensure that patent rights are not lost prematurely.

Applicants also are advised that in the case of inventions made in the United States, the Director of the USPTO must issue a license before applicants can apply for a patent in a foreign country. The filing of a U.S. patent application serves as a request for a foreign filing license. The application's filing receipt contains further information and guidance as to the status of applicant's license for foreign filing.

Applicants may wish to consult the USPTO booklet, "General Information Concerning Patents" (specifically, the section entitled "Treaties and Foreign Patents") for more information on timeframes and deadlines for filing foreign patent applications. The guide is available either by contacting the USPTO Contact Center at 800-786-9199, or it can be viewed on the USPTO website at http://www.uspto.gov/web/offices/pac/doc/general/index.html.

For information on preventing theft of your intellectual property (patents, trademarks and copyrights), you may wish to consult the U.S. Government website, http://www.stopfakes.gov. Part of a Department of Commerce initiative, this website includes self-help "toolkits" giving innovators guidance on how to protect intellectual property in specific countries such as China, Korea and Mexico. For questions regarding patent enforcement issues, applicants may call the U.S. Government hotline at 1-866-999-HALT (1-866-999-4158).

LICENSE FOR FOREIGN FILING UNDER
Title 35, United States Code, Section 184
Title 37, Code of Federal Regulations, 5.11 & 5.15

GRANTED

The applicant has been granted a license under 35 U.S.C. 184, if the phrase "IF REQUIRED, FOREIGN FILING LICENSE GRANTED" followed by a date appears on this form. Such licenses are issued in all applications where the conditions for issuance of a license have been met, regardless of whether or not a license may be required as set forth in 37 CFR 5.15. The scope and limitations of this license are set forth in 37 CFR 5.15(a) unless an earlier license has been issued under 37 CFR 5.15(b). The license is subject to revocation upon written notification. The date indicated is the effective date of the license, unless an earlier license of similar scope has been granted under 37 CFR 5.13 or 5.14.

This license is to be retained by the licensee and may be used at any time on or after the effective date thereof unless it is revoked. This license is automatically transferred to any related applications(s) filed under 37 CFR 1.53(d). This license is not retroactive.

The grant of a license does not in any way lessen the responsibility of a licensee for the security of the subject matter as imposed by any Government contract or the provisions of existing laws relating to espionage and the national security or the export of technical data. Licensees should apprise themselves of current regulations especially with respect to certain countries, of other agencies, particularly the Office of Defense Trade Controls, Department of State (with respect to Arms, Munitions and Implements of War (22 CFR 121-128)); the Bureau of

Industry and Security, Department of Commerce (15 CFR parts 730-774); the Office of Foreign Assets Control, Department of Treasury (31 CFR Parts 500+) and the Department of Energy.

NOT GRANTED

No license under 35 U.S.C. 184 has been granted at this time, if the phrase "IF REQUIRED, FOREIGN FILING LICENSE GRANTED" DOES NOT appear on this form. Applicant may still petition for a license under 37 CFR 5.12, if a license is desired before the expiration of 6 months from the filing date of the application. If 6 months has lapsed from the filing date of this application and the licensee has not received any indication of a secrecy order under 35 U.S.C. 181, the licensee may foreign file the application pursuant to 37 CFR 5.15(b).

UNITED STATES PATENT AND TRADEMARK OFFICE

COMMISSIONER FOR PATENTS
UNITED STATES PATENT AND TRADEMARK OFFICE
P.O. BOX 1450
ALEXANDRIA, VA 22313-1450
www.uspto.gov

BARNES & THORNBURG, LLP
11 SOUTH MERIDIAN
INDIANAPOLIS, IN 46204

COPY MAILED

OCT 17 2006

OFFICE OF PETITIONS

In re Application of
James Daniel Bryant, et. al.
Application No. 60/812,785
Filed: June 12, 2006
Attorney Docket No. 41060-79194

DECISION ON PETITION

This is a decision on the petition filed August 8, 2006, requesting that the above-identified application be accorded a filing date of June 9, 2006, instead of the presently accorded date of June 12, 2006. This petition is properly treated as a petition under 37 CFR 1.10(d).

Petitioner requests the earlier filing date on the basis that the application was purportedly deposited with the U. S. Postal Service (USPS) as Express Mail on June 9, 2006. In support, petitioner provides a copy of the Express Mail Label, No. EV 417058615 US, and a copy of the Pickup Service Statement for Express Mail, Global Express Guaranteed, Priority Mail or Parcel Post, which was signed by a USPS employee. The same Express Mail receipt number appears on the original transmittal letter found in the file.

Paragraph (d) of 37 CFR 1.10 states that:

> Any person filing correspondence under this section that was received by the Office and delivered by the "Express Mail Post Office to Addressee" service of the USPS, who can show that the "date-in" on the "Express Mail" mailing label or other official notation entered by the USPS was incorrectly entered or omitted by the USPS, may petition the Director to accord the correspondence a filing date as of the date the correspondence is shown to have been deposited with the USPS, provided that:
>
> (1) The petition is filed promptly after the person becomes aware that the Office has accorded, or will accord, a filing date based upon an incorrect entry by the USPS;
>
> (2) The number of the "Express Mail" mailing label was placed on the paper(s) or fee(s) that constitute the correspondence prior to the original mailing by "Express Mail"; and
>
> (3) The petition includes a showing which establishes, to the satisfaction of the Director, that the requested filing date was the date the correspondence was deposited in the "Express Mail Post Office to Addressee" service prior to the last scheduled pickup for that day. Any showing pursuant to this paragraph

must be corroborated by evidence from the USPS or that came into being after deposit and within one business day of the deposit of the correspondence in the "Express Mail Post Office to Addressee" service of the USPS.

A review of the Express Mail label shows a "date-in" of June 12, 2006. It is noted that while petitioner provided the Office with a copy of the Pickup Service Statement for Express Mail, Global Express Guaranteed, Priority Mail or Parcel Post, the handwritten date of pickup is not legible. Further, it cannot be determined if the handwritten date of pickup was changed by a representative of the USPS or someone else.

Since the "date-in" on the Express Mail mailing label is June 12, 2006 and the handwritten date of pickup on the Pickup Service Statement for Express Mail, Global Express Guaranteed, Priority Mail or Parcel Post label is not legible, restoration of the USPS Track and Confirm records for the Express Mail label in question was requested. The USPS Track and Confirm records disclose that Express Mail Label No. EV 417058615 US was accepted and enroute on June 12, 2006 at 8:23 pm at the Indianapolis, IN 46251 USPS location.

If the "date-in" on Express Mail Label No. EV 417058615 and the handwritten date on the Pickup Service Statement were incorrectly entered by the USPS employee, it was petitioner's responsibility to obtain correction of the "date-in" on the Express Mail label and Pickup Service Statement, or obtain a statement from USPS that would corroborate that the package in question was in the hands of the USPS employee on June 9, 2006.

Unfortunately, petitioner's argument is not well taken. Therefore, the petition is **DISMISSED** and the filing date will remain June 12, 2006.

Any request for reconsideration of this decision should be filed within **TWO MONTHS** of the date of this decision and should be addressed as follows:

By mail: Mail Stop PETITION
Commissioner for Patents
Post Office Box 1450
Alexandria, VA 22313-1450

By hand: U.S. Patent and Trademark Office
Customer Service Window, Mail Stop PETITION
Randolph Building
401 Dulany Street
Alexandria, VA 22314

The Centralized facsimile number is **(571) 273-8300**, and documentation to this number should be addressed to the Office of Petitions.

Any questions concerning this matter may be directed to Andrea Smith at (571) 272-3226.

Frances Hicks
Petitions Examiner

UNITED STATES PATENT AND TRADEMARK OFFICE

UNITED STATES DEPARTMENT OF COMMERCE
United States Patent and Trademark Office
Address: COMMISSIONER FOR PATENTS
P.O. Box 1450
Alexandria, Virginia 22313-1450
www.uspto.gov

APPL NO.	FILING OR 371 (c) DATE	ART UNIT	FIL FEE REC'D	ATTY.DOCKET NO	DRAWINGS	TOT CLMS	IND CLMS
60/813,238	06/13/2006		100	1941/A02	2		

CONFIRMATION NO. 3009

CORRECTED FILING RECEIPT

OC000000019619438

02101
BROMBERG & SUNSTEIN LLP
125 SUMMER STREET
BOSTON, MA 02110-1618

Date Mailed: 07/14/2006

Receipt is acknowledged of this provisional Patent Application. It will not be examined for patentability and will become abandoned not later than twelve months after its filing date. Be sure to provide the U.S. APPLICATION NUMBER, FILING DATE, NAME OF APPLICANT, and TITLE OF INVENTION when inquiring about this application. Fees transmitted by check or draft are subject to collection. Please verify the accuracy of the data presented on this receipt. **If an error is noted on this Filing Receipt, please mail to the Commissioner for Patents P.O. Box 1450 Alexandria Va 22313-1450. Please provide a copy of this Filing Receipt with the changes noted thereon. If you received a "Notice to File Missing Parts" for this application, please submit any corrections to this Filing Receipt with your reply to the Notice. When the USPTO processes the reply to the Notice, the USPTO will generate another Filing Receipt incorporating the requested corrections (if appropriate).**

Applicant(s)

Clemens M. Zierhofer, Kundl, AUSTRIA;
Erwin Hochmair, Axams, AUSTRIA;

Power of Attorney:

Alexander Smolenski Jr–47953

If Required, Foreign Filing License Granted: 07/05/2006

The country code and number of your priority application, to be used for filing abroad under the Paris Convention, is US60/813,238

Projected Publication Date: None, application is not eligible for pre-grant publication

Non-Publication Request: Not applicable

Early-Publication Request: Not applicable

**** SMALL ENTITY ****

Title

Cochlear implant power system and methodology

PROTECTING YOUR INVENTION OUTSIDE THE UNITED STATES

Since the rights granted by a U.S. patent extend only throughout the territory of the United States and have no effect in a foreign country, an inventor who wishes patent protection in another country must apply for a patent in a specific country or in regional patent offices. Applicants may wish to consider the filing of an international application under the Patent Cooperation Treaty (PCT). An international (PCT) application generally has the same effect as a regular national patent application in each PCT-member country. The PCT process **simplifies** the filing of patent applications on the same invention in member countries, but **does not result** in a grant of "an international patent" and does not eliminate the need of applicants to file additional documents and fees in countries where patent protection is desired.

Almost every country has its own patent law, and a person desiring a patent in a particular country must make an application for patent in that country in accordance with its particular laws. Since the laws of many countries differ in various respects from the patent law of the United States, applicants are advised to seek guidance from specific foreign countries to ensure that patent rights are not lost prematurely.

Applicants also are advised that in the case of inventions made in the United States, the Director of the USPTO must issue a license before applicants can apply for a patent in a foreign country. The filing of a U.S. patent application serves as a request for a foreign filing license. The application's filing receipt contains further information and guidance as to the status of applicant's license for foreign filing.

Applicants may wish to consult the USPTO booklet, "General Information Concerning Patents" (specifically, the section entitled "Treaties and Foreign Patents") for more information on timeframes and deadlines for filing foreign patent applications. The guide is available either by contacting the USPTO Contact Center at 800-786-9199, or it can be viewed on the USPTO website at http://www.uspto.gov/web/offices/pac/doc/general/index.html.

For information on preventing theft of your intellectual property (patents, trademarks and copyrights), you may wish to consult the U.S. Government website, http://www.stopfakes.gov. Part of a Department of Commerce initiative, this website includes self-help "toolkits" giving innovators guidance on how to protect intellectual property in specific countries such as China, Korea and Mexico. For questions regarding patent enforcement issues, applicants may call the U.S. Government hotline at 1-866-999-HALT (1-866-999-4158).

LICENSE FOR FOREIGN FILING UNDER
Title 35, United States Code, Section 184
Title 37, Code of Federal Regulations, 5.11 & 5.15

GRANTED

The applicant has been granted a license under 35 U.S.C. 184, if the phrase "IF REQUIRED, FOREIGN FILING LICENSE GRANTED" followed by a date appears on this form. Such licenses are issued in all applications where the conditions for issuance of a license have been met, regardless of whether or not a license may be required as set forth in 37 CFR 5.15. The scope and limitations of this license are set forth in 37 CFR 5.15(a) unless an earlier license has been issued under 37 CFR 5.15(b). The license is subject to revocation upon written notification. The date indicated is the effective date of the license, unless an earlier license of similar scope has been granted under 37 CFR 5.13 or 5.14.

This license is to be retained by the licensee and may be used at any time on or after the effective date thereof unless it is revoked. This license is automatically transferred to any related applications(s) filed under 37 CFR 1.53(d). This license is not retroactive.

The grant of a license does not in any way lessen the responsibility of a licensee for the security of the subject matter as imposed by any Government contract or the provisions of existing laws relating to espionage and the national security or the export of technical data. Licensees should apprise themselves of current regulations especially with respect to certain countries, of other agencies, particularly the Office of Defense Trade Controls, Department of State (with respect to Arms, Munitions and Implements of War (22 CFR 121-128)); the Bureau of Industry and Security, Department of Commerce (15 CFR parts 730-774); the Office of Foreign Assets Control, Department of Treasury (31 CFR Parts 500+) and the Department of Energy.

NOT GRANTED

No license under 35 U.S.C. 184 has been granted at this time, if the phrase "IF REQUIRED, FOREIGN FILING LICENSE GRANTED" DOES NOT appear on this form. Applicant may still petition for a license under 37 CFR 5.12, if a license is desired before the expiration of 6 months from the filing date of the application. If 6 months has lapsed from the filing date of this application and the licensee has not received any indication of a secrecy order under 35 U.S.C. 181, the licensee may foreign file the application pursuant to 37 CFR 5.15(b).

UNITED STATES PATENT AND TRADEMARK OFFICE

UNITED STATES DEPARTMENT OF COMMERCE
United States Patent and Trademark Office
Address: COMMISSIONER FOR PATENTS
P.O. Box 1450
Alexandria, Virginia 22313-1450
www.uspto.gov

APPL NO.	FILING OR 371 (c) DATE	ART UNIT	FIL FEE REC'D	ATTY.DOCKET NO	DRAWINGS	TOT CLMS	IND CLMS
60/813,261	06/12/2006		950	30906/41393	24		

CONFIRMATION NO. 3622

CORRECTED FILING RECEIPT

OC000000019714106

04743
MARSHALL, GERSTEIN & BORUN LLP
233 S. WACKER DRIVE, SUITE 6300
SEARS TOWER
CHICAGO, IL 60606

Date Mailed: 07/21/2006

Receipt is acknowledged of this provisional Patent Application. It will not be examined for patentability and will become abandoned not later than twelve months after its filing date. Be sure to provide the U.S. APPLICATION NUMBER, FILING DATE, NAME OF APPLICANT, and TITLE OF INVENTION when inquiring about this application. Fees transmitted by check or draft are subject to collection. Please verify the accuracy of the data presented on this receipt. **If an error is noted on this Filing Receipt, please mail to the Commissioner for Patents P.O. Box 1450 Alexandria Va 22313-1450. Please provide a copy of this Filing Receipt with the changes noted thereon. If you received a "Notice to File Missing Parts" for this application, please submit any corrections to this Filing Receipt with your reply to the Notice. When the USPTO processes the reply to the Notice, the USPTO will generate another Filing Receipt incorporating the requested corrections (if appropriate).**

Applicant(s)

Peter Armstrong Thompson, Bellevue, WA;
Jeffrey A. Ledbetter, Shoreline, WA;
Martha Susan Hayden-Ledbetter, Shoreline, WA;
William Brady, Bothell, WA;

Power of Attorney: The patent practitioners associated with Customer Number **04743**.

If Required, Foreign Filing License Granted: 07/05/2006

The country code and number of your priority application, to be used for filing abroad under the Paris Convention, is US60/813,261

Projected Publication Date: None, application is not eligible for pre-grant publication

Non-Publication Request: Not applicable

Early-Publication Request: Not applicable

Title

Single-chain multi-specific binding proteins with effector function

PROTECTING YOUR INVENTION OUTSIDE THE UNITED STATES

Since the rights granted by a U.S. patent extend only throughout the territory of the United States and have no effect in a foreign country, an inventor who wishes patent protection in another country must apply for a patent in a specific country or in regional patent offices. Applicants may wish to consider the filing of an international application under the Patent Cooperation Treaty (PCT). An international (PCT) application generally has the same effect as a regular national patent application in each PCT-member country. The PCT process **simplifies** the filing of patent applications on the same invention in member countries, but **does not result** in a grant of "an international patent" and does not eliminate the need of applicants to file additional documents and fees in countries where patent protection is desired.

Almost every country has its own patent law, and a person desiring a patent in a particular country must make an application for patent in that country in accordance with its particular laws. Since the laws of many countries differ in various respects from the patent law of the United States, applicants are advised to seek guidance from specific foreign countries to ensure that patent rights are not lost prematurely.

Applicants also are advised that in the case of inventions made in the United States, the Director of the USPTO must issue a license before applicants can apply for a patent in a foreign country. The filing of a U.S. patent application serves as a request for a foreign filing license. The application's filing receipt contains further information and guidance as to the status of applicant's license for foreign filing.

Applicants may wish to consult the USPTO booklet, "General Information Concerning Patents" (specifically, the section entitled "Treaties and Foreign Patents") for more information on timeframes and deadlines for filing foreign patent applications. The guide is available either by contacting the USPTO Contact Center at 800-786-9199, or it can be viewed on the USPTO website at http://www.uspto.gov/web/offices/pac/doc/general/index.html.

For information on preventing theft of your intellectual property (patents, trademarks and copyrights), you may wish to consult the U.S. Government website, http://www.stopfakes.gov. Part of a Department of Commerce initiative, this website includes self-help "toolkits" giving innovators guidance on how to protect intellectual property in specific countries such as China, Korea and Mexico. For questions regarding patent enforcement issues, applicants may call the U.S. Government hotline at 1-866-999-HALT (1-866-999-4158).

LICENSE FOR FOREIGN FILING UNDER
Title 35, United States Code, Section 184
Title 37, Code of Federal Regulations, 5.11 & 5.15

GRANTED

The applicant has been granted a license under 35 U.S.C. 184, if the phrase "IF REQUIRED, FOREIGN FILING LICENSE GRANTED" followed by a date appears on this form. Such licenses are issued in all applications where the conditions for issuance of a license have been met, regardless of whether or not a license may be required as set forth in 37 CFR 5.15. The scope and limitations of this license are set forth in 37 CFR 5.15(a) unless an earlier license has been issued under 37 CFR 5.15(b). The license is subject to revocation upon written notification. The date indicated is the effective date of the license, unless an earlier license of similar scope has been granted under 37 CFR 5.13 or 5.14.

This license is to be retained by the licensee and may be used at any time on or after the effective date thereof unless it is revoked. This license is automatically transferred to any related applications(s) filed under 37 CFR 1.53(d). This license is not retroactive.

The grant of a license does not in any way lessen the responsibility of a licensee for the security of the subject matter as imposed by any Government contract or the provisions of existing laws relating to espionage and the national security or the export of technical data. Licensees should apprise themselves of current regulations especially with respect to certain countries, of other agencies, particularly the Office of Defense Trade Controls, Department of State (with respect to Arms, Munitions and Implements of War (22 CFR 121-128)); the Bureau of

Industry and Security, Department of Commerce (15 CFR parts 730-774); the Office of Foreign Assets Control, Department of Treasury (31 CFR Parts 500+) and the Department of Energy.

NOT GRANTED

No license under 35 U.S.C. 184 has been granted at this time, if the phrase "IF REQUIRED, FOREIGN FILING LICENSE GRANTED" DOES NOT appear on this form. Applicant may still petition for a license under 37 CFR 5.12, if a license is desired before the expiration of 6 months from the filing date of the application. If 6 months has lapsed from the filing date of this application and the licensee has not received any indication of a secrecy order under 35 U.S.C. 181, the licensee may foreign file the application pursuant to 37 CFR 5.15(b).

UNITED STATES PATENT AND TRADEMARK OFFICE

Commissioner for Patents
United States Patent and Trademark Office
P.O. Box 1450
Alexandria, VA 22313-1450
www.uspto.gov

JUL 14 2005

STANLEY J. YAVNER
SUITE 203
120 NORTH MAIN STREET
NEW CITY NY 10956

In re Application of	:
Richard A. Leese et al	:
Serial No.: 10/881,160	: CONVERSION TO PROVISIONAL
Filed: July 1, 2004	:
Attorney Docket No.: 2221	:

This is in response to applicants' request, filed June 13, 2005, to convert this application to a provisional application

The petition is **GRANTED**.

Should there be any questions with regard to this letter please contact William R. Dixon, Jr. by letter addressed to the Director, Technology Center 1600, PO BOX 1450, ALEXANDRIA, VA 22313-1450, or by telephone at 571-272-0519 or by facsimile transmission at Office facsimile number, 571-273-8300.

William R. Dixon, Jr.
Special Program Examiner
Technology Center 1600

Copied from 10881160 on 09/01/2006

UNITED STATES PATENT AND TRADEMARK OFFICE

Commissioner for Patents
United States Patent and Trademark Office
P.O. Box 1450
Alexandria, VA 22313-1450
www.uspto.gov

MAIL

AUG 14 2006

DIRECTOR OFFICE
TECHNOLOGY CENTER 2600

FISH & RICHARDSON P.C.
P.O. Box 1022
MINNEAPOLIS MN 55440-1022

In re Application of:
Terence S. DOWLING, et al.
Serial No.: 11/351,553
Filed: February 10, 2006
For: **COARSE GRID ALIGNED COUNTERS**

DECISION ON PETITION
TO CONVERT APPLICATION

This is a decision on the petition under 37 C.F.R. § 1.53(b)(2)(ii), filed March 1, 2006, to convert the above-identified application to a provisional application under 35 U.S.C. § 111(b) and 37 C.F.R. § 1.53(b)(2).

The petition is **GRANTED.**

The application is being returned to the Office of Initial Patent Examination (OIPE) for further processing as a PROVISIONAL application under 35 U.S.C. § 111(b) and 37 C.F.R. § 1.53(b)(2), including the assignment of a new provisional application number.

The new provisional application number will be communicated to the applicant by OIPE in due course.

Krista Zele
Special Program Examiner
Technology Center 2600
Communications
(571) 272-7288

Copied from 11351553 on 09/01/2006

UNITED STATES PATENT AND TRADEMARK OFFICE

UNITED STATES DEPARTMENT OF COMMERCE
United States Patent and Trademark Office
Address: COMMISSIONER FOR PATENTS
P.O. Box 1450
Alexandria, Virginia 22313-1450
www.uspto.gov

APPLICATION NUMBER	FILING OR 371(c) DATE	FIRST NAMED APPLICANT	ATTY. DOCKET NO.
~~11/324,188~~ 60/813589	12/29/2005	Denise Demarais	578568010US

CONFIRMATION NO.

25096
PERKINS COIE LLP
PATENT-SEA
P.O. BOX 1247
SEATTLE, WA 98111-1247

Date Mailed: 09/06/2006

DECISION GRANTING REQUEST TO CONVERT TO PROVISIONAL

This is a decision on the request under 37 CFR 1.53(c)(2) received in the U.S. Patent and Trademark Office on **02/27/2006,** to convert the above-identified application to a provisional application under 35 U.S.C. 111(b) and 37 CFR 1.53(c).

The request is granted.

The application will be processed in the Office of Initial Patent Examination (OIPE) as a provisional application under 35 U.S.C. 111(b) and 37 CFR 1.53(c), including the assignment of a new provisional application number.

The provisional application number is **60/813,589.** The filing receipt for the provisional application number will be mailed to the applicant by OIPE in due course.

JANICE L TIRPETT
Office of Initial Patent Examination
(571) 272-4000, or 1-800-PTO-9199, or 1-800-972-6382

PART 2 - OFFICE COPY

UNITED STATES PATENT AND TRADEMARK OFFICE

UNITED STATES DEPARTMENT OF COMMERCE
United States Patent and Trademark Office
Address: COMMISSIONER FOR PATENTS
P.O. Box 1450
Alexandria, Virginia 22313-1450
www.uspto.gov

APPLICATION NUMBER	FILING OR 371(c) DATE	FIRST NAMED APPLICANT	ATTY. DOCKET NO.
~~11/369,047~~ 60/813590	03/06/2006	Naveen Kakani	037145-3825 (NC46871US)

CONFIRMATION NO.

27433
FOLEY & LARDNER LLP
321 NORTH CLARK STREET
SUITE 2800
CHICAGO, IL 60610-4764

Date Mailed: 09/11/2006

DECISION GRANTING REQUEST TO CONVERT TO PROVISIONAL

This is a decision on the request under 37 CFR 1.53(c)(2) received in the U.S. Patent and Trademark Office on **04/13/2006,** to convert the above-identified application to a provisional application under 35 U.S.C. 111(b) and 37 CFR 1.53(c).

The request is granted.

The application will be processed in the Office of Initial Patent Examination (OIPE) as a provisional application under 35 U.S.C. 111(b) and 37 CFR 1.53(c), including the assignment of a new provisional application number.

The provisional application number is **60/813,590.** The filing receipt for the provisional application number will be mailed to the applicant by OIPE in due course.

JANICE L TIPPETT
Office of Initial Patent Examination
(571) 272-4000, or 1-800-PTO-9199, or 1-800-972-6382

PART 2 - OFFICE COPY

UNITED STATES PATENT AND TRADEMARK OFFICE

UNITED STATES DEPARTMENT OF COMMERCE
United States Patent and Trademark Office
Address: COMMISSIONER FOR PATENTS
P.O. Box 1450
Alexandria, Virginia 22313-1450
www.uspto.gov

APPLICATION NUMBER	FILING OR 371(c) DATE	FIRST NAMED APPLICANT	ATTY. DOCKET NO.
11/428,835	07/06/2006	James Ingraham	

CONFIRMATION NO.

James Ingraham
9100 Andrews Highway
Apartment #1412
Odessa, TX 79765

Date Mailed: 09/13/2006

DECISION GRANTING REQUEST TO CONVERT TO PROVISIONAL

This is a decision on the request under 37 CFR 1.53(c)(2) received in the U.S. Patent and Trademark Office on **09/07/2006,** to convert the above-identified application to a provisional application under 35 U.S.C. 111(b) and 37 CFR 1.53(c).

The request is granted.

The application will be processed in the Office of Initial Patent Examination (OIPE) as a provisional application under 35 U.S.C. 111(b) and 37 CFR 1.53(c), including the assignment of a new provisional application number.

The provisional application number is **60/813,591.** The filing receipt for the provisional application number will be mailed to the applicant by OIPE in due course.

JANICE L TIPPETT
Office of Initial Patent Examination
(571) 272-4000, or 1-800-PTO-9199, or 1-800-972-6382

PART 2 - OFFICE COPY

Copied from 11428835 on 10/10/2006

UNITED STATES PATENT AND TRADEMARK OFFICE

UNITED STATES DEPARTMENT OF COMMERCE
United States Patent and Trademark Office
Address: COMMISSIONER FOR PATENTS
P.O. Box 1450
Alexandria, Virginia 22313-1450
www.uspto.gov

APPLICATION NUMBER	FILING OR 371(c) DATE	FIRST NAMED APPLICANT	ATTY. DOCKET NO.
11/163,417	10/18/2005	J. William Mauchly	CISCO15471

60/813592

CONFIRMATION NO.

21921
DOV ROSENFELD
5507 COLLEGE AVE
SUITE 2
OAKLAND, CA 94618

Date Mailed: 10/02/2006

DECISION GRANTING REQUEST TO CONVERT TO PROVISIONAL

This is a decision on the request under 37 CFR 1.53(c)(2) received in the U.S. Patent and Trademark Office on **09/25/2006,** to convert the above-identified application to a provisional application under 35 U.S.C. 111(b) and 37 CFR 1.53(c).

The request is granted.

The application will be processed in the Office of Initial Patent Examination (OIPE) as a provisional application under 35 U.S.C. 111(b) and 37 CFR 1.53(c), including the assignment of a new provisional application number.

The provisional application number is **60/813,592.** The filing receipt for the provisional application number will be mailed to the applicant by OIPE in due course.

JANICE L TIPPETT
Office of Initial Patent Examination
(571) 272-4000, or 1-800-PTO-9199, or 1-800-972-6382

PART 2 - OFFICE COPY

UNITED STATES PATENT AND TRADEMARK OFFICE

UNITED STATES DEPARTMENT OF COMMERCE
United States Patent and Trademark Office
Address: COMMISSIONER FOR PATENTS
P.O. Box 1450
Alexandria, Virginia 22313-1450
www.uspto.gov

APPLICATION NUMBER	FILING OR 371(c) DATE	FIRST NAMED APPLICANT	ATTY. DOCKET NO.
~~11/055,960~~ 60/813594	02/10/2005	James Daniel Wagner	PSC0839

CONFIRMATION NO.

33451
PSC SCANNING, INC. - STOEL RIVES LLP
C/O STOEL RIVES LLP
900 SW 5TH AVENUE
SUITE 2600
PORTLAND, OR 97204

Date Mailed: 10/24/2006

DECISION GRANTING REQUEST TO CONVERT TO PROVISIONAL

This is a decision on the request under 37 CFR 1.53(c)(2) received in the U.S. Patent and Trademark Office on **12/19/2005,** to convert the above-identified application to a provisional application under 35 U.S.C. 111(b) and 37 CFR 1.53(c).

The request is granted.

The application will be processed in the Office of Initial Patent Examination (OIPE) as a provisional application under 35 U.S.C. 111(b) and 37 CFR 1.53(c), including the assignment of a new provisional application number.

The provisional application number is **60/813,594.** The filing receipt for the provisional application number will be mailed to the applicant by OIPE in due course.

JANICE L TIPPETT
Office of Initial Patent Examination
(571) 272-4000, or 1-800-PTO-9199, or 1-800-972-6382

PART 2 - OFFICE COPY

UNITED STATES PATENT AND TRADEMARK OFFICE

Commissioner for Patents
United States Patent and Trademark Office
P.O. Box 1450
Alexandria, VA 22313-1450
www.uspto.gov

PSC SCANNING, INC. - STOEL RIVES LLP
C/O STOEL RIVES LLP
900 SW 5TH AVENUE
SUITE 2600
PORTLAND OR 97204

MAIL

OCT 03 2006

DIRECTOR OFFICE
TECHNOLOGY CENTER 2600

In re Application of:
James Daniel Wagner, et al.
Serial No.: 11/055,960
Filed: February 10, 2005
For: **RFID POWER RAMPING FOR TAG SINGULATION**

DECISION ON PETITION
TO CONVERT APPLICATION

This is a decision on the petition under 37 C.F.R. § 1.53(b)(2)(ii), filed December 19, 2005, to convert the above-identified application to a provisional application under 35 U.S.C. § 111(b) and 37 C.F.R. § 1.53(b)(2).

The petition is **GRANTED.**

The application is being returned to the Office of Initial Patent Examination (OIPE) for further processing as a PROVISIONAL application under 35 U.S.C. § 111(b) and 37 C.F.R. § 1.53(b)(2), including the assignment of a new provisional application number.

The new provisional application number will be communicated to the applicant by OIPE in due course.

Krista Zele
Special Program Examiner
Technology Center 2600
Communications
(571) 272-7288

Copied from 11055960 on 10/26/2006

UNITED STATES PATENT AND TRADEMARK OFFICE

Commissioner for Patents
United States Patent and Trademark Office
P.O. Box 1450
Alexandria, VA 22313-1450
www.uspto.gov

MAIL

AUG 14 2006

DIRECTOR OFFICE
TECHNOLOGY CENTER 2600

PSC SCANNING, INC. - STOEL RIVES LLP
C/O STOEL RIVES LLP
900 SW 5TH AVENUE
SUITE 2600
PORTLAND OR 97204

In re Application of:
Robert Wayne HOUGEN, et al.
Serial No.: 11/131,082
Filed: May 16, 2005
For: **APPARATUS AND SYSTEM FOR A DATA READER**

DECISION ON PETITION
TO CONVERT APPLICATION

This is a decision on the petition under 37 C.F.R. § 1.53(b)(2)(ii), filed March 6, 2006, to convert the above-identified application to a provisional application under 35 U.S.C. § 111(b) and 37 C.F.R. § 1.53(b)(2).

The petition is **GRANTED.**

The application is being returned to the Office of Initial Patent Examination (OIPE) for further processing as a PROVISIONAL application under 35 U.S.C. § 111(b) and 37 C.F.R. § 1.53(b)(2), including the assignment of a new provisional application number.

The new provisional application number will be communicated to the applicant by OIPE in due course.

Krista Zele
Special Program Examiner
Technology Center 2600
Communications
(571) 272-7288

Copied from 11131082 on 10/26/2006

UNITED STATES PATENT AND TRADEMARK OFFICE

Commissioner for Patents
United States Patent and Trademark Office
P.O. Box 1450
Alexandria, VA 22313-1450
www.uspto.gov

Woodcock Washburn LLP
One Liberty Place
46th Floor
Philadelphia, PA 19103

MAILED
FROM DIRECTOR'S OFFICE

OCT 17 2006

TECHNOLOGY CENTER 3600

In re application of :
HOPKINS, John Chandler III :
Application No. 11/321,973 :
Filed: December 29, 2005 :
Attorney Docket No. USAA-0012/US-0070.01 :
For: PERSONALIZED FINANCIAL :
EXPOSURE PROTECTION :

DECISION ON PETITION
TO CONVERT TO A
PROVISIONAL APPLICATION

This is a decision on the petition under 37 CFR 1.53(c)(2) filed February 24, 2006 to convert the above-identified application to a provisional application under 35 U.S.C. 111(b) and 37 CFR 1.53(c)(2).

The requirements for granting the conversion are: (A) a petition requesting conversion and the petition fee set forth in 37 CFR 1.17(q), and (B) the petition must be filed prior to the abandonment of the 37 CFR 1.53(b) application, the payment of the issue fee, the expiration of 12 months after the filing date of the application, or the filing of a request for a statutory invention registration under 37 CFR 1.293, whichever event is earlier. Upon granting the petition, no fees properly paid in the 37 CFR 1.53(b) application are entitled to be refunded.

Since all of the requirements for conversion to a provisional application under 37 CFR 1.53(c)(2) have been met, the petition is **GRANTED**.

The application will be assigned a new provisional application number and will be further processed by the Office of National Application Review (ONAR) as a **PROVISIONAL** application under 35 U.S.C. 111(b) and 37 CFR 1.53(c)(2). The new provisional application number will be communicated to applicant by ONAR in due course.

Wynn Coggins, Director
Technology Center 3600
(571) 272-5350

WC/kd: 10/10/06

Copied from 11321973 on 10/26/2006

UNITED STATES PATENT AND TRADEMARK OFFICE

UNITED STATES DEPARTMENT OF COMMERCE
United States Patent and Trademark Office
Address: COMMISSIONER FOR PATENTS
P.O. Box 1450
Alexandria, Virginia 22313-1450
www.uspto.gov

APPLICATION NUMBER	FILING OR 371(c) DATE	FIRST NAMED APPLICANT	ATTY. DOCKET NO.
11/207,276	08/19/2005	Hin Young Lim Tung	

60/813600

CONFIRMATION NO.

HIN YOUNG LIM TUNG
P.O. BOX 6009
ASTORIA, NY 11106

Date Mailed: 08/31/2006

DECISION GRANTING REQUEST TO CONVERT TO PROVISIONAL

This is a decision on the request under 37 CFR 1.53(c)(2) received in the U.S. Patent and Trademark Office on **07/26/2006,** to convert the above-identified application to a provisional application under 35 U.S.C. 111(b) and 37 CFR 1.53(c).

The request is granted.

The application will be processed in the Office of Initial Patent Examination (OIPE) as a provisional application under 35 U.S.C. 111(b) and 37 CFR 1.53(c), including the assignment of a new provisional application number.

The provisional application number is **60/813,600.** The filing receipt for the provisional application number will be mailed to the applicant by OIPE in due course.

JOHN S DILL
Office of Initial Patent Examination
(571) 272-4000, or 1-800-PTO-9199, or 1-800-972-6382

PART 2 - OFFICE COPY

UNITED STATES PATENT AND TRADEMARK OFFICE

UNITED STATES DEPARTMENT OF COMMERCE
United States Patent and Trademark Office
Address: COMMISSIONER FOR PATENTS
P.O. Box 1450
Alexandria, Virginia 22313-1450
www.uspto.gov

APPLICATION NUMBER	FILING OR 371(c) DATE	FIRST NAMED APPLICANT	ATTY. DOCKET NO.
~~11/365,004~~ 60/813606	02/28/2006	Glynn Thomas Faircloth	4126-4038

CONFIRMATION NO.

MORGAN & FINNEGAN, L.L.P.
3 World Financial Center
New York, NY 10281-2101

Date Mailed: 09/12/2006

DECISION GRANTING REQUEST TO CONVERT TO PROVISIONAL

This is a decision on the request under 37 CFR 1.53(c)(2) received in the U.S. Patent and Trademark Office on **02/28/2006,** to convert the above-identified application to a provisional application under 35 U.S.C. 111(b) and 37 CFR 1.53(c).

The request is granted.

The application will be processed in the Office of Initial Patent Examination (OIPE) as a provisional application under 35 U.S.C. 111(b) and 37 CFR 1.53(c), including the assignment of a new provisional application number.

The provisional application number is **60/813,606.** The filing receipt for the provisional application number will be mailed to the applicant by OIPE in due course.

Shirley Holmes

SHIRLEY A HOLMES
Office of Initial Patent Examination
(571) 272-4000, or 1-800-PTO-9199, or 1-800-972-6382

PART 2 - OFFICE COPY

UNITED STATES PATENT AND TRADEMARK OFFICE

Commissioner for Patents
United States Patent and Trademark Office
P.O. Box 1450
Alexandria, VA 22313-1450
www.uspto.gov

FEB 10 2006

CAMPBELL & FLORES LLP
4370 LA JOLLA VILLAGE DRIVE
7TH FLOOR
SAN DIEGO CA 92122

In re Application of	:
Robert T. Abraham et al	:
Serial No.: 10/165,216	: CONVERSION TO PROVISIONAL
Filed: June 6, 2002	:
Attorney Docket No.: 66654-713	:

This is in response to applicants' request, filed June 6, 2003, to convert this application to a provisional application. The delay in acting on this petition is regretted.

The petition is **GRANTED**.

Should there be any questions with regard to this letter please contact William R. Dixon, Jr. by letter addressed to the Director, Technology Center 1600, PO BOX 1450, ALEXANDRIA, VA 22313-1450, or by telephone at 571-272-0519 or by facsimile transmission at Office facsimile number, 571-273-8300.

William R. Dixon, Jr.
Special Program Examiner
Technology Center 1600

Copied from 10165216 on 11/29/2006

UNITED STATES PATENT AND TRADEMARK OFFICE

Commissioner for Patents
United States Patent and Trademark Office
P.O. Box 1450
Alexandria, VA 22313-1450
www.uspto.gov

WORKMAN NYDEGGER
(F/K/A WORKMAN NYDEGGER & SEELEY)
60 EAST SOUTH TEMPLE
1000 EAGLE GATE TOWER
SALT LAKE CITY UT 84111

In re Application of: HARRIS, THOMAS D. Serial No.: 11/366,159 Filed: March 2, 2006 Docket: 16640.1 Title: AIR CONDITIONING SYSTEM	DECISION ON PETITION FOR CONVERSON to PROVISIONAL APPLICATION UNDER 37 CFR 1.153(C)(2) and MPEP 601.01(C)

This is a decision on the petition for conversion to a provisional application under 37 CFR 1.53 (C)(2).

The petition filed on Aug. 3, 2006 requests conversion to a provisional application under 37 CFR 1.53(C)(2) and includes the required petition and the required fees as set forth in 37 CFR 1.17(q) and 1.16(k). It was also filed within the time frames as set forth in 37 CFR 1.53 (C)(2) (i-iii).

The fee of $50.00 was charged against the Deposit Account # 233178 in accordance with 37 CFR 1.17(q) as authorized in the petition.

The petition is **GRANTED**. The application is being forwarded to the Office of Initial Patent Examination for further processing.

Greg Vidovich for

Karen M. Young, Director
Technology Center 3700

Copied from 11366159 on 11/29/2006

UNITED STATES PATENT AND TRADEMARK OFFICE

Commissioner for Patents
United States Patent and Trademark Office
P.O. Box 1450
Alexandria, VA 22313-1450
www.uspto.gov

SEP 21 2006

SUTHERLAND ASBILL & BRENNAN LLP
999 PEACHTREE STREET, N.E.
ATLANTA GA 30309

In re Application of	:
David Bear	:
Serial No.: 11/392,450	: CONVERSION TO PROVISIONAL
Filed: March 29, 2006	:
Attorney Docket No.: 25917-0010	:

This is in response to applicants' request, filed August 22, 2006, to convert this application to a provisional application

The petition is **GRANTED**.

Should there be any questions with regard to this letter please contact William R. Dixon, Jr. by letter addressed to the Director, Technology Center 1600, PO BOX 1450, ALEXANDRIA, VA 22313-1450, or by telephone at 571-272-0519 or by facsimile transmission at Office facsimile number, 571-273-8300.

William R. Dixon, Jr.
Special Program Examiner
Technology Center 1600

Copied from 11392450 on 11/29/2006

UNITED STATES PATENT AND TRADEMARK OFFICE

Commissioner for Patents
United States Patent and Trademark Office
P.O. Box 1450
Alexandria, VA 22313-1450
www.uspto.gov

SEP 21 2006

LEON R. YANKWICH
YANKWICH & ASSOCIATES
201 BROADWAY
CAMBRIDGE MA 02139

In re Application of	:
Hedy Adari et al	:
Serial No.: 11/145,783	: CONVERSION TO PROVISIONAL
Filed: June 6, 2005	:
Attorney Docket No.: AVA-435.0	:

This is in response to applicants' request, filed May 31, 2006, to convert this application to a provisional application

The petition is **GRANTED**.

Should there be any questions with regard to this letter please contact William R. Dixon, Jr. by letter addressed to the Director, Technology Center 1600, PO BOX 1450, ALEXANDRIA, VA 22313-1450, or by telephone at 571-272-0519 or by facsimile transmission at Office facsimile number, 571-273-8300.

William R. Dixon, Jr.
Special Program Examiner
Technology Center 1600

Copied from 11145783 on 01/03/2007

UNITED STATES PATENT AND TRADEMARK OFFICE

Commissioner for Patents
United States Patent and Trademark Office
P.O. Box 1450
Alexandria, VA 22313-1450
www.uspto.gov

FEB - 7 2006

WOODCOCK WASHBURN LLP
ONE LIBERTY PLACE, 46TH FLOOR
1650 MARKET STREET
PHILADELPHIA PA 19103

In re Application of	:
Qi Chao et al	:
Serial No.: 11/210,936	: CONVERSION TO PROVISIONAL
Filed: August 24, 2005	:
Attorney Docket No.: SALM-0002	:

This is in response to applicants' request, filed January 10, 2006, to convert this application to a provisional application

The petition is **GRANTED**.

Should there be any questions with regard to this letter please contact William R. Dixon, Jr. by letter addressed to the Director, Technology Center 1600, PO BOX 1450, ALEXANDRIA, VA 22313-1450, or by telephone at 571-272-0519 or by facsimile transmission at Office facsimile number, 571-273-8300.

William R. Dixon, Jr.
Special Program Examiner
Technology Center 1600

Copied from 11210936 on 11/29/2006

UNITED STATES PATENT AND TRADEMARK OFFICE

OCT 3 2006

Commissioner for Patents
United States Patent and Trademark Office
P.O. Box 1450
Alexandria, VA 22313-1450
www.uspto.gov

MANELLI DENISON & SELTER
2000 M STREET NW SUITE 700
WASHINGTON DC 20036-3307

In re Application of	:
Liren Huang et al	:
Serial No.: 11/214,772	: CONVERSION TO PROVISIONAL
Filed: August 31, 2005	:
Attorney Docket No.: 46-431	:

This is in response to applicants' request, filed August 31, 2006, to convert this application to a provisional application

The petition is **GRANTED**.

Should there be any questions with regard to this letter please contact William R. Dixon, Jr. by letter addressed to the Director, Technology Center 1600, PO BOX 1450, ALEXANDRIA, VA 22313-1450, or by telephone at 571-272-0519 or by facsimile transmission at Office facsimile number, 571-273-8300.

William R. Dixon, Jr.
Special Program Examiner
Technology Center 1600

Copied from 11214772 on 11/29/2006

UNITED STATES PATENT AND TRADEMARK OFFICE

UNITED STATES DEPARTMENT OF COMMERCE
United States Patent and Trademark Office
Address: COMMISSIONER FOR PATENTS
P.O. Box 1450
Alexandria, Virginia 22313-1450
www.uspto.gov

APPLICATION NUMBER	FILING OR 371(c) DATE	FIRST NAMED APPLICANT	ATTY. DOCKET NO.
11/381,355	05/02/2006	Ving Lee	64507-5021-PR

CONFIRMATION NO.

43850
MORGAN, LEWIS & BOCKIUS LLP (SF)
2 PALO ALTO SQUARE
3000 El Camino Real, Suite 700
PALO ALTO, CA 94306

Date Mailed: 12/21/2006

DECISION GRANTING REQUEST TO CONVERT TO PROVISIONAL

This is a decision on the request under 37 CFR 1.53(c)(2) received in the U.S. Patent and Trademark Office on **09/06/2006,** to convert the above-identified application to a provisional application under 35 U.S.C. 111(b) and 37 CFR 1.53(c).

The request is granted.

The application will be processed in the Office of Initial Patent Examination (OIPE) as a provisional application under 35 U.S.C. 111(b) and 37 CFR 1.53(c), including the assignment of a new provisional application number.

The provisional application number is **60/813,623.** The filing receipt for the provisional application number will be mailed to the applicant by OIPE in due course.

JOHN S DILL for
Office of Initial Patent Examination
(571) 272-4000, or 1-800-PTO-9199, or 1-800-972-6382

PART 1 - ATTORNEY/APPLICANT COPY

UNITED STATES PATENT AND TRADEMARK OFFICE

UNITED STATES DEPARTMENT OF COMMERCE
United States Patent and Trademark Office
Address: COMMISSIONER FOR PATENTS
P.O. Box 1450
Alexandria, Virginia 22313-1450
www.uspto.gov

APPLICATION NUMBER	FILING OR 371(c) DATE	FIRST NAMED APPLICANT	ATTY. DOCKET NO.
11/381,355	05/02/2006	Ving Lee	64507-5021-PR

CONFIRMATION NO.

43850
MORGAN, LEWIS & BOCKIUS LLP (SF)
2 PALO ALTO SQUARE
3000 El Camino Real, Suite 700
PALO ALTO, CA 94306

Date Mailed: 12/21/2006

DECISION GRANTING REQUEST TO CONVERT TO PROVISIONAL

This is a decision on the request under 37 CFR 1.53(c)(2) received in the U.S. Patent and Trademark Office on **09/06/2006,** to convert the above-identified application to a provisional application under 35 U.S.C. 111(b) and 37 CFR 1.53(c).

The request is granted.

The application will be processed in the Office of Initial Patent Examination (OIPE) as a provisional application under 35 U.S.C. 111(b) and 37 CFR 1.53(c), including the assignment of a new provisional application number.

The provisional application number is **60/813,623.** The filing receipt for the provisional application number will be mailed to the applicant by OIPE in due course.

JOHN S DILL
Office of Initial Patent Examination
(571) 272-4000, or 1-800-PTO-9199, or 1-800-972-6382

PART 2 - OFFICE COPY

Copied from 11381355 on 01/04/2007

UNITED STATES PATENT AND TRADEMARK OFFICE

UNITED STATES DEPARTMENT OF COMMERCE
United States Patent and Trademark Office
Address: COMMISSIONER FOR PATENTS
P.O. Box 1450
Alexandria, Virginia 22313-1450
www.uspto.gov

APPLICATION NUMBER	FILING OR 371(c) DATE	FIRST NAMED APPLICANT	ATTY. DOCKET NO.
~~11/183,202~~ 60813625	07/15/2005	Scott Hendricks	20612.044/P30688US00

CONFIRMATION NO.

28381
ARNOLD & PORTER LLP
ATTN: IP DOCKETING DEPT.
555 TWELFTH STREET, N.W.
WASHINGTON, DC 20004-1206

Date Mailed: 01/30/2007

DECISION GRANTING REQUEST TO CONVERT TO PROVISIONAL

This is a decision on the request under 37 CFR 1.53(c)(2) received in the U.S. Patent and Trademark Office on **06/30/2006,** to convert the above-identified application to a provisional application under 35 U.S.C. 111(b) and 37 CFR 1.53(c).

The request is granted.

The application will be processed in the Office of Initial Patent Examination (OIPE) as a provisional application under 35 U.S.C. 111(b) and 37 CFR 1.53(c), including the assignment of a new provisional application number.

The provisional application number is **60/813,625.** The filing receipt for the provisional application number will be mailed to the applicant by OIPE in due course.

JOHN S DILL
Office of Initial Patent Examination
(571) 272-4000, or 1-800-PTO-9199, or 1-800-972-6382

PART 2 - OFFICE COPY

UNITED STATES PATENT AND TRADEMARK OFFICE

Commissioner for Patents
United States Patent and Trademark Office
P.O. Box 1450
Alexandria, VA 22313-1450
www.uspto.gov

MAILED
FROM DIRECTOR'S OFFICE

DEC 0 6 2006

TECHNOLOGY CENTER 3600

McGarry Bair PC
171 Monroe Avenue, N.W.
Suite 600
Grand Rapids, MI 49503

In re application of Thomas J. Newhouse et al. Application No. 11/426,110 Filed: June 23, 2006 For: MODULAR SOFT SEATING STUDY FURNITURE	DECISION ON PETITION TO CONVERT TO A PROVISIONAL APPLICATION

This is a decision on the petition under 37 CFR 1.53(c)(2) filed October 13, 2006, to convert the above-identified application to a provisional application under 35 U.S.C. 111(b) and 37 CFR 1.53(c)(2).

The requirements for the granting of such a petition are: (A) a petition requesting conversion and the petition fee set forth in 37 CFR 1.17(q), and (B) the petition must be filed prior to the abandonment of the 37 CFR 1.53(b) application, the payment of the issue fee, the expiration of 12 months after the applications filing date, or the filing of a request for a statutory invention registration under 37 CFR 1.293, whichever event is earlier. Upon the grant of such a petition no fees properly paid in the 37 CFR 1.53(b) application are entitled to be refunded.

Since all of the requirements for conversion to a provisional application under 37 CFR 1.53(c)(2) have been met, the petition is **GRANTED**.

The application will be assigned a new provisional application number and will be further processed by the Office of Initial Patent Examination (OIPE) as a **PROVISIONAL** application under 35 U.S.C. 111(b) and 37 CFR 1.53(c)(2). The new provisional application number will be communicated to applicant by OIPE in due course.

Wynn Coggins, Director
Patent Technology Center 3600
(571) 272-5350

kjd :11/28/06

Copied from 11426110 on 01/03/2007

UNITED STATES PATENT AND TRADEMARK OFFICE

UNITED STATES DEPARTMENT OF COMMERCE
United States Patent and Trademark Office
Address: COMMISSIONER FOR PATENTS
P.O. Box 1450
Alexandria, Virginia 22313-1450
www.uspto.gov

APPLICATION NUMBER	FILING OR 371(c) DATE	FIRST NAMED APPLICANT	ATTY. DOCKET NO.
11/428,452	07/03/2006	Joe Madigan	MAD.001US0

CONFIRMATION NO.

40280
STEVEN VOSEN
1563 SOLANO AVENUE #206
BERKELEY, CA 94707

Date Mailed: 12/21/2006

DECISION GRANTING REQUEST TO CONVERT TO PROVISIONAL

This is a decision on the request under 37 CFR 1.53(c)(2) received in the U.S. Patent and Trademark Office on **09/18/2006,** to convert the above-identified application to a provisional application under 35 U.S.C. 111(b) and 37 CFR 1.53(c).

The request is granted.

The application will be processed in the Office of Initial Patent Examination (OIPE) as a provisional application under 35 U.S.C. 111(b) and 37 CFR 1.53(c), including the assignment of a new provisional application number.

The provisional application number is **60/813,635.** The filing receipt for the provisional application number will be mailed to the applicant by OIPE in due course.

JOHN S DILL
Office of Initial Patent Examination
(571) 272-4000, or 1-800-PTO-9199, or 1-800-972-6382

PART 2 - OFFICE COPY

UNITED STATES PATENT AND TRADEMARK OFFICE

Commissioner for Patents
United States Patent and Trademark Office
P.O. Box 1450
Alexandria, VA 22313-1450
www.uspto.gov

BRACEWELL & GIULIANI LLP
P.O. BOX 61389
HOUSTON TX 77208-1389

COPY MAILED

SEP 29 2006

OFFICE OF PETITIONS

In re Application of
Eric P. Hanson
Application No. 60/814,005
Filed: June 15, 2006
Attorney Docket No. 070320.000003

DECISION ON PETITION

This is a decision on the petition filed September 14, 2006 in response to the Notice of Omitted Items mailed July 13,2 006, which is treated under 37 CFR 1.182.

On June 15, 2006, the application was filed. On July 13, 2006, the Office of Initial Patent Examination mailed a Notice of Omitted Items in a Provisional Application stating that the application had been accorded a filing date of June 15, 2006, but that Figure 13 described in the specification appeared to have been omitted.

In response, petitioners assert that the application as filed included fifty (50) sheets of drawings, that the drawings included Figures 1-50, that Figure 13 was on sheet 12/50 and that the postcard receipt is proof that fifty (50) sheets were filed on June 15, 2006.

The argument and evidence supplied with the petition have been carefully considered, but are not totally persuasive. The USPTO has a well-established and well-publicized practice of providing a receipt for papers filed in the USPTO to any applicant desiring a receipt. The practice requires that any paper for which a receipt is desired be filed in the USPTO with a self-addressed postcard identifying the paper. A postcard receipt which itemizes and properly identifies the papers which are being filed serves as prima facie evidence of receipt in the USPTO of all the items listed thereon on the date stamped thereon by the USPTO. See section 503, Manual of Patent Examining Procedure (MPEP 503).

Unfortunately, in this instance, the postcard receipt does not show an Office date stamp and is not properly itemized. The postcard identifies the number of drawing sheets not the number of Figures. Thus it cannot be determined whether the application as filed included 49 or 50 sheets of drawings and it cannot be determined if the application as filed included Figure 13.

The petition is therefore **DISMISSED**.

Petitioners are advised that for provisional applications, the option to take the later filing date, *i.e.*, the date of submission of the omitted page(s) or drawing(s), is not available.[1]

Since proof of prior receipt of the omitted items has not been established, no refund is due.

The application is being returned to the Office of Initial Patent Examination for further processing with a filing date of June 15, 2006, using only the application papers filed on November 10, 2004 and not the twelve (12) sheets of drawings submitted on petition.

Telephone inquiries regarding this decision should be directed to the undersigned Petitions Attorney at (571) 272-3212.

Patricia Faison-Ball

Patricia Faison-Ball
Senior Petitions Attorney
Office of Petitions

[1]MPEP 601.01(d). In view of the relatively low filing fee for provisional applications, and the USPTO's desire to minimize the processing of provisional applications, the USPTO will not grant petitions under 37 CFR 1.182 to accept omitted page(s) or drawing(s) and accord an application filing date as of the date of submission in provisional applications. The applicant should simply file a new completed provisional application. Id.

UNITED STATES PATENT AND TRADEMARK OFFICE

Commissioner for Patents
United States Patent and Trademark Office
P.O. Box 1450
Alexandria, VA 22313-1450
www.uspto.gov

ROBERT LEE NEVINS SR.
ROUTE 28A
BOX 5
BOICEVILLE, NY 12412

COPY MAILED

SEP 01 2009

OFFICE OF PETITIONS

In re Application of	:	
Robert Lee NEVINS, et al	:	
Application No. 60/814,039	:	DECISION ON PETITION
Filed: June 16, 2006	:	TO MAKE SPECIAL UNDER
Attorney Docket No.	:	37 CFR 1.102(c)(1)
	:	

This is a decision on the petition under 37 CFR 1.102(c)(1), filed April 2, 2009, to make the above-identified application special based on applicant's age as set forth in M.P.E.P. § 708.02, Section IV.

The petition is **GRANTED**.

A grantable petition to make an application special under 37 CFR 1.102(c)(1) and MPEP § 708.02, Section IV: Applicant's Age must be accompanied by evidence showing that at least one of the applicants is 65 years of age, or more, such as a birth certificate or a statement by applicant. No fee is required

The instant petition includes a statement signed by Applicant Robert Lee Nevins. Accordingly, the above-identified application has been accorded "special" status.

This application is being referred back to the Office of Data Management for further processing. This application will be accorded "special" status when pre-examination processing is done.

Telephone inquiries concerning this decision should be directed to the undersigned at 571-272-6735.

/Diane Goodwyn/
Petitions Examiner
Office of Petitions

UNITED STATES PATENT AND TRADEMARK OFFICE

Commissioner for Patents
United States Patent and Trademark Office
P.O. Box 1450
Alexandria, VA 22313-1450
www.uspto.gov

KENYON & KENYON LLP
ONE BROADWAY
NEW YORK NY 10004

COPY MAILED

DEC 03 2007

OFFICE OF PETITIONS

In re Application of	:	
Valeriano Merli et al	:	
Application No. 60/814,246	:	DECISION GRANTING
Filed: June 15, 2006	:	PETITION
Attorney Docket No. 12670/47201	:	

This is a decision on the petition, filed May 23, 2007, requesting that the above-identified application be accorded a filing date of June 15, 2006, rather than the presently accorded date of June 16, 2006. The petition is properly treated as a petition under 37 CFR 1.10(c).

Petitioner alleges that the application was deposited in Express Mail Service on June 15, 2006. In support, the petition is accompanied by a copy of Express Mail receipt No. EV320250204US (the same Express Mail number found on the original application papers located in the official file) showing a "date in" of June 15, 2006.

The Office considers the date the paper or fee is shown to have been deposited as "Express Mail" to be the "date-in" on the Express Mail label; MPEP 513. The evidence is convincing that the application was deposited as "Express Mail" with the U. S. Postal Service on .

In view of the above, the petition is **GRANTED**.

This application file is being referred to the Office of Initial Patent Examination (OIPE) for correction of the filing date to **June 15, 2006** and for issuance of a corrected filing receipt.

Telephone inquiries relating to this decision should be directed to the undersigned at (571) 272-3208. Telephone inquiries related to OIPE processing should be directed to their hotline at (571) 272-4100.

Karen Creasy

Karen Creasy
Petitions Examiner
Office of Petitions

UNITED STATES PATENT AND TRADEMARK OFFICE

Commissioner for Patents
United States Patent and Trademark Office
P.O. Box 1450
Alexandria, VA 22313-1450
www.uspto.gov

LEWIS B. STERNFELS
LAW OFFICES OF CLARK D. GROSS
SUITE 1200
12424 WILSHIRE BOULEVARD
LOS ANGELES CA 90025-1031

COPY MAILED

OCT 07 2008

OFFICE OF PETITIONS

In re Application of	:	
Higgins et al.	:	
Application Number: 60/814279	:	ON PETITION
Filing Date: 06/16/2006	:	
Attorney Docket Number: 7148-134-PR	:	

This is a decision on the "PETITION TO ALLOCATE A FILING DATE OF 16 JUNE 2006 OR TO REVIVE UNDER 37 CFR 1.137(b)," filed on July 29, 2008, which, in the absence of a fee, is being treated as a petition under 37 CFR 1.181 to withdraw the holding of abandonment.[1]

The petition is **dismissed**.

A proper petition should be submitted within **TWO (2) MONTHS** from the mail date of this decision. **This time period is not extendable.**[2]

This application became abandoned on December 8, 2006, for failure to file a timely file a proper reply to the Notice to File Missing Parts of Provisional Application, mailed on July 7, 2006, which set a two (2) month shortened period for reply. A proposed reply and a petition and the fee for a three (3) month extension of time were filed on November, 20, 2006. On December 13, 2006, a Notice of Incomplete Reply (Provisional) was mailed, stating that the reply filed on November 20, 2006 was incomplete, and that the time period remains as set forth in the Notice mailed on July 7, 2006. Notice of Abandonment was mailed on May 27, 2008. The subject petition was filed on July 29, 2008.

---

[1] In the absence of the petition fee, which is required by law, the PTO can only treat the instant petition as a (feeless 1.181) petition to withdraw the holding of abandonment. See Krahn v. Comm'r, 15 USPQ2d 1823, 1825 (E.D. Va. 1990).

[2] 37 CFR 1.181(f).

Petitioner requests that the holding of abandonment be withdrawn, or, in the alternative, that the application be revived under 37 CFR 1.137(b).

A review of the record reveals the following:

1. On June 16, 2006, the subject provisional application was filed. The application as filed included a compact disc (hereinafter "CD").

2. On July 7, 2006, a Notice to File Missing Parts of Provisional Application was mailed, stating that the CD submission failed to comply with 37 CFR 1.52(e) in that only one copy of the CD was submitted.

3. On November 20, 2006, in reply, two (2) more copies of the CD were submitted, along with a three (3)-month extension of time.

4. On December 13, 2006, a Notice of Incomplete Reply (Provisional) was mailed, stating that the CDs again failed to comply with 37 CFR 1.52(e) in that the CDs were not in the proper format and also the CD contained material which was not appropriate for submission on a CD. The Notice mailed on December 13, 2006, further stated that the time period set forth in the Notice mailed on July 7, 2006 remained in effect.

5. On February 27, 2007, the applicant filed a letter asking the Office to disregard the CDs, stating they were filed in error and were not needed for a complete application.

6. On May 27, 2008, a Notice of Abandonment was mailed, stating the reply of February 27, 2007 was untimely.

7. On July 29, 2008, the subject petition was filed.

Petitioners argue that the holding of abandonment should be withdrawn because the Office did not timely inform petitioners, in the Notice to File Missing Parts of Provisional Application mailed on July 7, 2006, that the material filed on the CD was not of the type which could be submitted on a CD.

Petitioners' argument has been considered, but is not persuasive. The Notice to File Missing Parts and the Notice of Incomplete Reply were both necessitated by an error on the part of applicant in filing the unnecessary CDs, and applicant did not filed the correct extensions of time with the reply to the Notice of Incomplete Reply.

Further, it is the applicant's responsibility, not the Office's, to file the application in the proper format. The filing of application information in an incorrect format for the type of subject matter being submitted is an avoidable mistake. Withdrawal of the holding of abandonment is not merited when the abandonment is the result of an avoidable mistake.

Accordingly, the petition is **dismissed**.

With regard to the request for a petition under 37 CFR 1.137(b), 35 U.S.C. 41(a)(7) provides that a petition for the revival of an unintentionally abandoned application or for the unintentionally delayed payment of the issue fee must be accompanied by the petition fee set forth in 37 CFR 1.17(m), unless the petition is filed under 35 U.S.C. 133 or 151 (on the basis of unavoidable delay), in which case the fee is set forth in 37 CFR 1.17(l). The USPTO will not reach the merits of any petition under 37 CFR 1.137 lacking the requisite petition fee.[3]

Thus, unless the circumstances warrant the withdrawal of the holding of abandonment (i.e., it is determined that the application is not properly held abandoned), the payment of a petition fee to obtain the revival of an abandoned application is a statutory prerequisite to revival of the abandoned application, and cannot be waived.[4]

A review of the papers filed with the present petition reveals that no payment of the petition fee has been provided. Furthermore, no authorization to charge counsel's deposit account can be located among the papers located in the official file.

In summary, as withdrawal of the holding of abandonment is warranted, a proper petition under 37 CFR 1.137(b), including the requisite petition fee, must be filed.

---

[3] See Krahn v. Comm'r, 15 USPQ2d 1823, 1825 (E.D. Va. 1990).

[4] In addition, the phrase "[o]n filing" in 35 U.S.C. 41(a)(7) means that the petition fee is required for the filing (and not merely the grant) of a petition under 37 CFR 1.137. See H.R. Rep. No. 542, 97th Cong., 2d Sess. 6 (1982), reprinted in 1982 U.S.C.C.A.N. 770 ("[t]he fees set forth in this section are due on filing the petition"). Therefore, the Office: (A) will not refund the petition fee required by 37 CFR 1.17(l) or 1.17(m), regardless of whether the petition under 37 CFR 1.137 is dismissed or denied; and (B) will not reach the merits of any petition under 37 CFR 1.137 lacking the requisite petition fee.

Should petitioner decide to file a petition under 37 CFR 1.137(b), the petition fee due would be $810.00 for a small entity.

A copy of the form for filing a petition under 37 CFR 1.137(b) to revive an application unintentionally abandoned is enclosed herewith for petitioner's convenience.

Further correspondence with respect to this matter should be addressed as follows:

By mail: Mail Stop Petition
Commissioner for Patents
P.O. Box 1450
Alexandria, VA 22313-1450

By FAX: (571) 273-8300
Attn: Office of Petitions

By hand: Customer Service Window
Mail Stop Petition
Randolph Building
401 Dulany Street
Alexandria, VA 22314

Telephone inquiries concerning this matter may be directed to the undersigned at (571) 272-3231.

D Wood

Douglas I. Wood
Senior Petitions Attorney
Office of Petitions

Enclosure: Form PTO/SB/64

PTO/SB/64 (09-08)
Approved for use through 10/31/2008. OMB 0651-0031
U.S. Patent and Trademark Office; U.S. DEPARTMENT OF COMMERCE
Under the Paperwork Reduction Act of 1995, no persons are required to respond to a collection of information unless it displays a valid OMB control number.

PETITION FOR REVIVAL OF AN APPLICATION FOR PATENT ABANDONED UNINTENTIONALLY UNDER 37 CFR 1.137(b)

Docket Number (Optional)

First named inventor:

Application No.: Art Unit:

Filed: Examiner:

Title:

Attention: Office of Petitions
Mail Stop Petition
Commissioner for Patents
P.O. Box 1450
Alexandria, VA 22313-1450
FAX (571) 273-8300

NOTE: If information or assistance is needed in completing this form, please contact Petitions Information at (571) 272-3282.

The above-identified application became abandoned for failure to file a timely and proper reply to a notice or action by the United States Patent and Trademark Office. The date of abandonment is the day after the expiration date of the period set for reply in the office notice or action plus an extensions of time actually obtained.

APPLICANT HEREBY PETITIONS FOR REVIVAL OF THIS APPLICATION

NOTE: A grantable petition requires the following items:
(1) Petition fee;
(2) Reply and/or issue fee;
(3) Terminal disclaimer with disclaimer fee - required for all utility and plant applications filed before June 8, 1995; and for all design applications; and
(4) Statement that the entire delay was unintentional.

1. Petition fee

☐ Small entity-fee $ _____ (37 CFR 1.17(m)). Applicant claims small entity status. See 37 CFR 1.27.

☐ Other than small entity – fee $ _____ (37 CFR 1.17(m))

2. Reply and/or fee

A. The reply and/or fee to the above-noted Office action in the form of _____(identify type of reply):

☐ has been filed previously on _____.
☐ is enclosed herewith.

B. The issue fee and publication fee (if applicable) of $ _____.

☐ has been paid previously on _____.
☐ is enclosed herewith.

This collection of information is required by 37 CFR 1.137(b). The information is required to obtain or retain a benefit by the public which is to file (and by the USPTO to process) an application. Confidentiality is governed by 35 U.S.C. 122 and 37 CFR 1.11 and 1.14. This collection is estimated to take 1.0 hour to complete, including gathering, preparing, and submitting the completed application form to the USPTO. Time will vary depending upon the individual case. Any comments on the amount of time you require to complete this form and/or suggestions for reducing this burden, should be sent to the Chief Information Officer, U.S. Patent and Trademark Office, U.S. Department of Commerce, P.O. Box 1450, Alexandria, VA 22313-1450. DO NOT SEND FEES OR COMPLETED FORMS TO THIS ADDRESS. **SEND TO: Mail Stop Petition, Commissioner for Patents, P.O. Box 1450, Alexandria, VA 22313-1450.**

If you need assistance in completing the form, call 1-800-PTO-9199 and select option 2.

Under the Paperwork Reduction Act of 1995, no persons are required to respond to a collection of information unless it displays a valid OMB control number.

3. Terminal disclaimer with disclaimer fee

☐ Since this utility/plant application was filed on or after June 8, 1995, no terminal disclaimer is required.

☐ A terminal disclaimer (and disclaimer fee (37 CFR 1.20(d)) of $ _____ for a small entity or $ _____ for other than a small entity) disclaiming the required period of time is enclosed herewith (see PTO/SB/63).

4. STATEMENT: The entire delay in filing the required reply from the due date for the required reply until the filing of a grantable petition under 37 CFR 1.137(b) was unintentional. [NOTE: The United States Patent and Trademark Office may require additional information if there is a question as to whether either the abandonment or the delay in filing a petition under 37 CFR 1.137(b) was unintentional (MPEP 711.03(c), subsections (III)(C) and (D)).]

WARNING:

Petitioner/applicant is cautioned to avoid submitting personal information in documents filed in a patent application that may contribute to identity theft. Personal information such as social security numbers, bank account numbers, or credit card numbers (other than a check or credit card authorization form PTO-2038 submitted for payment purposes) is never required by the USPTO to support a petition or an application. If this type of personal information is included in documents submitted to the USPTO, petitioners/applicants should consider redacting such personal information from the documents before submitting them to the USPTO. Petitioner/applicant is advised that the record of a patent application is available to the public after publication of the application (unless a non-publication request in compliance with 37 CFR 1.213(a) is made in the application) or issuance of a patent. Furthermore, the record from an abandoned application may also be available to the public if the application is referenced in a published application or an issued patent (see 37 CFR 1.14). Checks and credit card authorization forms PTO-2038 submitted for payment purposes are not retained in the application file and therefore are not publicly available.

Signature	Date
Typed or printed name	Registration Number, if applicable
Address	Telephone Number
Address	

Enclosures: ☐ Fee Payment

☐ Reply

☐ Terminal Disclaimer Form

☐ Additional sheets containing statements establishing unintentional delay

☐ Other: _____

CERTIFICATE OF MAILING OR TRANSMISSION [37 CFR 1.8(a)]

I hereby certify that this correspondence is being:

☐ Deposited with the United States Postal Service on the date shown below with sufficient postage as first class mail in an envelope addressed to: Mail Stop Petition, Commissioner for Patents, P. O. Box 1450, Alexandria, VA 22313-1450.

☐ Transmitted by facsimile on the date shown below to the United States Patent and Trademark Office at (571) 273-8300.

Date	Signature
	Typed or printed name of person signing certificate

Privacy Act Statement

The **Privacy Act of 1974 (P.L. 93-579)** requires that you be given certain information in connection with your submission of the attached form related to a patent application or patent. Accordingly, pursuant to the requirements of the Act, please be advised that: (1) the general authority for the collection of this information is 35 U.S.C. 2(b)(2); (2) furnishing of the information solicited is voluntary; and (3) the principal purpose for which the information is used by the U.S. Patent and Trademark Office is to process and/or examine your submission related to a patent application or patent. If you do not furnish the requested information, the U.S. Patent and Trademark Office may not be able to process and/or examine your submission, which may result in termination of proceedings or abandonment of the application or expiration of the patent.

The information provided by you in this form will be subject to the following routine uses:

1. The information on this form will be treated confidentially to the extent allowed under the Freedom of Information Act (5 U.S.C. 552) and the Privacy Act (5 U.S.C 552a). Records from this system of records may be disclosed to the Department of Justice to determine whether disclosure of these records is required by the Freedom of Information Act.
2. A record from this system of records may be disclosed, as a routine use, in the course of presenting evidence to a court, magistrate, or administrative tribunal, including disclosures to opposing counsel in the course of settlement negotiations.
3. A record in this system of records may be disclosed, as a routine use, to a Member of Congress submitting a request involving an individual, to whom the record pertains, when the individual has requested assistance from the Member with respect to the subject matter of the record.
4. A record in this system of records may be disclosed, as a routine use, to a contractor of the Agency having need for the information in order to perform a contract. Recipients of information shall be required to comply with the requirements of the Privacy Act of 1974, as amended, pursuant to 5 U.S.C. 552a(m).
5. A record related to an International Application filed under the Patent Cooperation Treaty in this system of records may be disclosed, as a routine use, to the International Bureau of the World Intellectual Property Organization, pursuant to the Patent Cooperation Treaty.
6. A record in this system of records may be disclosed, as a routine use, to another federal agency for purposes of National Security review (35 U.S.C. 181) and for review pursuant to the Atomic Energy Act (42 U.S.C. 218(c)).
7. A record from this system of records may be disclosed, as a routine use, to the Administrator, General Services, or his/her designee, during an inspection of records conducted by GSA as part of that agency's responsibility to recommend improvements in records management practices and programs, under authority of 44 U.S.C. 2904 and 2906. Such disclosure shall be made in accordance with the GSA regulations governing inspection of records for this purpose, and any other relevant (*i.e.*, GSA or Commerce) directive. Such disclosure shall not be used to make determinations about individuals.
8. A record from this system of records may be disclosed, as a routine use, to the public after either publication of the application pursuant to 35 U.S.C. 122(b) or issuance of a patent pursuant to 35 U.S.C. 151. Further, a record may be disclosed, subject to the limitations of 37 CFR 1.14, as a routine use, to the public if the record was filed in an application which became abandoned or in which the proceedings were terminated and which application is referenced by either a published application, an application open to public inspection or an issued patent.
9. A record from this system of records may be disclosed, as a routine use, to a Federal, State, or local law enforcement agency, if the USPTO becomes aware of a violation or potential violation of law or regulation.

UNITED STATES PATENT AND TRADEMARK OFFICE

Commissioner for Patents
United States Patent and Trademark Office
P.O. Box 1450
Alexandria, VA 22313-1450
www.uspto.gov
DIW Dec-08

LEWIS B. STERNFELS
LAW OFFICES OF CLARK D. GROSS
SUITE 1200
12424 WILSHIRE BOULEVARD
LOS ANGELES CA 90025-1031

COPY MAILED

DEC 03 2008

OFFICE OF PETITIONS

In re Application of :
Higgins et al. :
Application Number: 60/814279 :
Filing Date: 06/16/2006 : ON PETITION
Attorney Docket Number: 7148-134-PR :

This is a decision on the petition under 37 CFR 1.137(b)[1] filed on November 6, 2008, to revive the above-identified application.

The petition is **GRANTED**.

This application became abandoned on December 8, 2006, for failure to file a timely file a proper reply to the Notice to File Missing Parts of Provisional Application, mailed on July 7, 2006, which set a two (2) month shortened period for reply. A proposed reply and a petition and the fee for a three (3) month extension of time were filed on November, 20, 2006. On December 13, 2006, a Notice of Incomplete Reply (Provisional) was mailed, stating that the reply filed on November 20, 2006 was incomplete, and that the time period remains as set forth in the Notice mailed on July 7, 2006. Notice of Abandonment was mailed on May

[1] Effective December 1, 1997, the provisions of 37 CFR 1.137(b) now provide that where the delay in reply was unintentional, a petition may be filed to revive an abandoned application or a lapsed patent pursuant to 37 CFR 1.137(b). A grantable petition filed under the provisions of 37 CFR 1.137(b) must be accompanied by:

(1) the required reply, unless previously filed. In a nonprovisional application abandoned for failure to prosecute, the required reply may be met by the filing of a continuing application. In a nonprovisional application filed on or after June 8, 1995, and abandoned for failure to prosecute, the required reply may also be met by the filing of a request for continued examination in compliance with § 1.114. In an application or patent, abandoned or lapsed for failure to pay the issue fee or any portion thereof, the required reply must be the payment of the issue fee or any outstanding balance thereof. In an application abandoned for failure to pay the publication fee, the required reply must include payment of the publication fee.

(2) the petition fee as set forth in 37 CFR 1.17(m);

(3) a statement that the entire delay in filing the required reply from the due date for the reply until the filing of a grantable petition pursuant to 37 CFR 1.137(b) was unintentional. The Director may required additional information where there is a question whether the delay was unintentional; and

(4) any terminal disclaimer (and fee as set forth in 37 CFR 1.20(d)) required pursuant to 37 CFR 1.137(c)).

27, 2008. The petition filed on July 29, 2008 was dismissed on October 7, 2008.

The application is referred to the Office of Patent Application Processing for further processing.

Telephone inquiries concerning this matter may be directed to the undersigned at (571) 272-3231.

D Wood

Douglas I. Wood
Senior Petitions Attorney
Office of Petitions

UNITED STATES PATENT AND TRADEMARK OFFICE

Commissioner for Patents
United States Patent and Trademark Office
P.O. Box 1450
Alexandria, VA 22313-1450
www.uspto.gov

Roetzel & Andress
222 South Main St.
Akron, Ohio 44308

COPY MAILED
SEP 27 2006
OFFICE OF PETITIONS

In re Application of :
El Khoury et al. :
Application No. 60/814,335 : DECISION ON PETITION
Filed: June 16, 2006 :
Attorney Docket No. 089498.0630 :

This is a decision on the petition filed July 31, 2006, requesting that the above-identified application be accorded a filing date of June 16, 2006, with Figure 1a as part of the original disclosure.

The application was filed on June 16, 2006. On July 12, 2006, the Office of Initial Patent Examination mailed a Notice of Omitted Item(s) in a Provisional Application (Notice), stating that the application had been accorded a filing date of June 16, 2006, but that Figures 1a and 1c appeared to have been omitted.

On July 31, 2006, petitioner submitted the present petition, an authorization to charge the deposit account for the petition fee, and a copy of the application (including Figure 1a). In the petition, petitioner asserted:

> The Office is correct that Figure 1c was not submitted with the original application papers. The reference to Figure 1c did remain in the specification. The subject matter of Figure 1c is in fact part of Figure 1b. Figure 1a was submitted, as evidenced by the attached copy of the application as filed.
>
> Petitioner requests that the enclosed Figure 1a be considered part of the original filing.

The Office file is the official record of the papers originally filed in this application. A review of the official file reveals that Figures labeled 1a and 1c were not located among the original application papers as filed. A petitioner alleging that a paper was filed in the Office and later misplaced has the burden of proving the allegation by a preponderance of the evidence.

The Office has a well-established and well-publicized practice of providing a receipt for papers filed in the Office to any applicant desiring a receipt. The practice requires that any paper for which a receipt is desired, be filed in the Office with a self-addressed postcard identifying the paper. A postcard receipt, which itemizes and properly identifies the papers that are being filed, serves as prima facie

evidence of receipt in the Office of all the items listed thereon on the date stamped by the Office. See MPEP 503.

Unfortunately, petitioner did not provide a copy of a returned, dated-stamped postcard receipt itemizing the papers filed on June 16, 2006. Instead, petitioner submitted a copy of the application as evidence of receipt of Figure 1a in the USPTO on June 16, 2006. The Office notes that the submission of a copy of the application papers alone is not sufficient evidence that Figure 1a was filed and received by the USPTO with the application papers on June 16, 2006. Therefore, petitioner did not submit sufficient prima facie evidence that Figures 1a was filed with the original application papers on June 16, 2006.

In view of the above, the petition is **dismissed**. The $400.00 petition fee will be charged to the Deposit Account as authorized.

Any request for reconsideration should be filed within **TWO (2) MONTHS** of the date of this decision in order to be considered timely. 37 CFR 1.181(f). This time period may not be extended pursuant to 37 CFR 1.136.

Further correspondence with respect to this matter should be addressed as follows and to the attention of Senior Petitions Attorney Christina Tartera Donnell:

By mail: Mail Stop Petition
Commissioner for Patents
P.O. Box 1450
Alexandria, VA 22313-1450

By FAX: (571) 273-8300
Attn: Office of Petitions

By hand: Customer Services Window
Randolph Building
401 Dulany Street
Alexandria, VA 22314

This matter is being referred to the Office of Initial Patent Examination for further processing with a filing date of June 16, 2006, using only Figures 1b, 2a, 2b, 3, 4, 5, and 6, submitted on filing.

Telephone inquiries should be directed to the undersigned at (571) 272-3211.

C. T. Donnell

Christina Tartera Donnell
Senior Petitions Attorney
Office of Petitions

UNITED STATES PATENT AND TRADEMARK OFFICE

UNITED STATES DEPARTMENT OF COMMERCE
United States Patent and Trademark Office
Address: COMMISSIONER FOR PATENTS
P.O. Box 1450
Alexandria, Virginia 22313-1450
www.uspto.gov

APPL NO.	FILING OR 371 (c) DATE	ART UNIT	FIL FEE REC'D	ATTY.DOCKET NO	DRAWINGS	TOT CLMS	IND CLMS
60/814,338	06/15/2006		100	21882-531 PRO2	1		

CONFIRMATION NO. 7837

35437
MINTZ LEVIN COHN FERRIS GLOVSKY & POPEO
666 THIRD AVENUE
NEW YORK, NY 10017

CORRECTED FILING RECEIPT

OC000000019858998

Date Mailed: 08/02/2006

Receipt is acknowledged of this provisional Patent Application. It will not be examined for patentability and will become abandoned not later than twelve months after its filing date. Be sure to provide the U.S. APPLICATION NUMBER, FILING DATE, NAME OF APPLICANT, and TITLE OF INVENTION when inquiring about this application. Fees transmitted by check or draft are subject to collection. Please verify the accuracy of the data presented on this receipt. **If an error is noted on this Filing Receipt, please mail to the Commissioner for Patents P.O. Box 1450 Alexandria Va 22313-1450. Please provide a copy of this Filing Receipt with the changes noted thereon. If you received a "Notice to File Missing Parts" for this application, please submit any corrections to this Filing Receipt with your reply to the Notice. When the USPTO processes the reply to the Notice, the USPTO will generate another Filing Receipt incorporating the requested corrections (if appropriate).**

Applicant(s)

Anders Haegerstrand, Danderyd, SWEDEN;
Jarkko Kortesmaa, Stockholm, SWEDEN;
Jonas Frisen, Stockholm, SWEDEN;
Goran Bertilsson, Vasterhaninge, SWEDEN;

Power of Attorney:

Eric Sinn--40177

If Required, Foreign Filing License Granted: 07/12/2006

The country code and number of your priority application, to be used for filing abroad under the Paris Convention, is US60/814,338

Projected Publication Date: None, application is not eligible for pre-grant publication

Non-Publication Request: Not applicable

Early-Publication Request: Not applicable

**** SMALL ENTITY ****

Title

Method for the treatment of CNS cancers

PROTECTING YOUR INVENTION OUTSIDE THE UNITED STATES

Since the rights granted by a U.S. patent extend only throughout the territory of the United States and have no effect in a foreign country, an inventor who wishes patent protection in another country must apply for a patent in a specific country or in regional patent offices. Applicants may wish to consider the filing of an international application under the Patent Cooperation Treaty (PCT). An international (PCT) application generally has the same effect as a regular national patent application in each PCT-member country. The PCT process **simplifies** the filing of patent applications on the same invention in member countries, but **does not result** in a grant of "an international patent" and does not eliminate the need of applicants to file additional documents and fees in countries where patent protection is desired.

Almost every country has its own patent law, and a person desiring a patent in a particular country must make an application for patent in that country in accordance with its particular laws. Since the laws of many countries differ in various respects from the patent law of the United States, applicants are advised to seek guidance from specific foreign countries to ensure that patent rights are not lost prematurely.

Applicants also are advised that in the case of inventions made in the United States, the Director of the USPTO must issue a license before applicants can apply for a patent in a foreign country. The filing of a U.S. patent application serves as a request for a foreign filing license. The application's filing receipt contains further information and guidance as to the status of applicant's license for foreign filing.

Applicants may wish to consult the USPTO booklet, "General Information Concerning Patents" (specifically, the section entitled "Treaties and Foreign Patents") for more information on timeframes and deadlines for filing foreign patent applications. The guide is available either by contacting the USPTO Contact Center at 800-786-9199, or it can be viewed on the USPTO website at http://www.uspto.gov/web/offices/pac/doc/general/index.html.

For information on preventing theft of your intellectual property (patents, trademarks and copyrights), you may wish to consult the U.S. Government website, http://www.stopfakes.gov. Part of a Department of Commerce initiative, this website includes self-help "toolkits" giving innovators guidance on how to protect intellectual property in specific countries such as China, Korea and Mexico. For questions regarding patent enforcement issues, applicants may call the U.S. Government hotline at 1-866-999-HALT (1-866-999-4158).

LICENSE FOR FOREIGN FILING UNDER
Title 35, United States Code, Section 184
Title 37, Code of Federal Regulations, 5.11 & 5.15

GRANTED

The applicant has been granted a license under 35 U.S.C. 184, if the phrase "IF REQUIRED, FOREIGN FILING LICENSE GRANTED" followed by a date appears on this form. Such licenses are issued in all applications where the conditions for issuance of a license have been met, regardless of whether or not a license may be required as set forth in 37 CFR 5.15. The scope and limitations of this license are set forth in 37 CFR 5.15(a) unless an earlier license has been issued under 37 CFR 5.15(b). The license is subject to revocation upon written notification. The date indicated is the effective date of the license, unless an earlier license of similar scope has been granted under 37 CFR 5.13 or 5.14.

This license is to be retained by the licensee and may be used at any time on or after the effective date thereof unless it is revoked. This license is automatically transferred to any related applications(s) filed under 37 CFR 1.53(d). This license is not retroactive.

The grant of a license does not in any way lessen the responsibility of a licensee for the security of the subject matter as imposed by any Government contract or the provisions of existing laws relating to espionage and the national security or the export of technical data. Licensees should apprise themselves of current regulations especially with respect to certain countries, of other agencies, particularly the Office of Defense Trade Controls,

Department of State (with respect to Arms, Munitions and Implements of War (22 CFR 121-128)); the Bureau of Industry and Security, Department of Commerce (15 CFR parts 730-774); the Office of Foreign Assets Control, Department of Treasury (31 CFR Parts 500+) and the Department of Energy.

NOT GRANTED

No license under 35 U.S.C. 184 has been granted at this time, if the phrase "IF REQUIRED, FOREIGN FILING LICENSE GRANTED" DOES NOT appear on this form. Applicant may still petition for a license under 37 CFR 5.12, if a license is desired before the expiration of 6 months from the filing date of the application. If 6 months has lapsed from the filing date of this application and the licensee has not received any indication of a secrecy order under 35 U.S.C. 181, the licensee may foreign file the application pursuant to 37 CFR 5.15(b).

UNITED STATES PATENT AND TRADEMARK OFFICE

Commissioner for Patents
United States Patent and Trademark Office
P.O. Box 1450
Alexandria, VA 22313-1450
www.uspto.gov

PILLSBURY WINTHROP SHAW PITTMAN LLP
P O BOX 10500
McLEAN, VA 22102

COPY MAILED
SEP 19 2006
OFFICE OF PETITIONS

In re Application of	:
Hubertus Johannes Gertrudus Simons	:
Application No. 60/814,531	: DECISION ON PETITIONS
Filed: June 19, 2006	: UNDER 37 CFR 182
Attorney Docket No. 081468-0355742	:

This is a decision on the petitions under 37 CFR 1.182 to (1) correct the inventor's nickname from "Geert Simons" to his full legal name of - Hubertus Johannes Gertrudus Simons -, and (2) to expedite consideration of the petition to correct the inventor's name.

The petitions are **GRANTED**.

Office records have been changed to reflect the above-noted inventor's full legal name. A Corrected Filing Receipt which reflects this change in the inventor's name accompanies this decision on petition.

As authorized, a $400 fee for each of the petitions under 37 CFR 1.182 has been assessed to petitioner's deposit account as authorized.

Inquiries concerning this decision on petition may be directed to the undersigned at (571) 272-3218.

Frances Hicks
Frances Hicks
Petitions Examiner
Office of Petitions

ATTACHMENT: Corrected Filing Receipt

UNITED STATES PATENT AND TRADEMARK OFFICE

UNITED STATES DEPARTMENT OF COMMERCE
United States Patent and Trademark Office
Address: COMMISSIONER FOR PATENTS
P.O. Box 1450
Alexandria, Virginia 22313-1450
www.uspto.gov

APPL NO.	FILING OR 371 (c) DATE	ART UNIT	FIL FEE REC'D	ATTY.DOCKET NO	DRAWINGS	TOT CLMS	IND CLMS
60/814,531	06/19/2006		200	081468-0355742	10		

CONFIRMATION NO. 7895

CORRECTED FILING RECEIPT

OC000000020491070

00909
PILLSBURY WINTHROP SHAW PITTMAN, LLP
P.O. BOX 10500
MCLEAN, VA 22102

Date Mailed: 09/19/2006

Receipt is acknowledged of this provisional Patent Application. It will not be examined for patentability and will become abandoned not later than twelve months after its filing date. Be sure to provide the U.S. APPLICATION NUMBER, FILING DATE, NAME OF APPLICANT, and TITLE OF INVENTION when inquiring about this application. Fees transmitted by check or draft are subject to collection. Please verify the accuracy of the data presented on this receipt. **If an error is noted on this Filing Receipt, please mail to the Commissioner for Patents P.O. Box 1450 Alexandria Va 22313-1450. Please provide a copy of this Filing Receipt with the changes noted thereon. If you received a "Notice to File Missing Parts" for this application, please submit any corrections to this Filing Receipt with your reply to the Notice. When the USPTO processes the reply to the Notice, the USPTO will generate another Filing Receipt incorporating the requested corrections (if appropriate).**

Applicant(s)

Hubertus Johannes Gertrudus Simons, Veldhoven, NETHERLANDS;

Power of Attorney: The patent practitioners associated with Customer Number **00909**.

If Required, Foreign Filing License Granted: 07/24/2006

The country code and number of your priority application, to be used for filing abroad under the Paris Convention, is US60/814,531

Projected Publication Date: None, application is not eligible for pre-grant publication

Non-Publication Request: Not applicable

Early-Publication Request: Not applicable

Title

Method of correcting a process recipe for grid deformations in a lithographic apparatus and lithographic assembly using the same

PROTECTING YOUR INVENTION OUTSIDE THE UNITED STATES

Since the rights granted by a U.S. patent extend only throughout the territory of the United States and have no

effect in a foreign country, an inventor who wishes patent protection in another country must apply for a patent in a specific country or in regional patent offices. Applicants may wish to consider the filing of an international application under the Patent Cooperation Treaty (PCT). An international (PCT) application generally has the same effect as a regular national patent application in each PCT-member country. The PCT process **simplifies** the filing of patent applications on the same invention in member countries, but **does not result** in a grant of "an international patent" and does not eliminate the need of applicants to file additional documents and fees in countries where patent protection is desired.

Almost every country has its own patent law, and a person desiring a patent in a particular country must make an application for patent in that country in accordance with its particular laws. Since the laws of many countries differ in various respects from the patent law of the United States, applicants are advised to seek guidance from specific foreign countries to ensure that patent rights are not lost prematurely.

Applicants also are advised that in the case of inventions made in the United States, the Director of the USPTO must issue a license before applicants can apply for a patent in a foreign country. The filing of a U.S. patent application serves as a request for a foreign filing license. The application's filing receipt contains further information and guidance as to the status of applicant's license for foreign filing.

Applicants may wish to consult the USPTO booklet, "General Information Concerning Patents" (specifically, the section entitled "Treaties and Foreign Patents") for more information on timeframes and deadlines for filing foreign patent applications. The guide is available either by contacting the USPTO Contact Center at 800-786-9199, or it can be viewed on the USPTO website at http://www.uspto.gov/web/offices/pac/doc/general/index.html.

For information on preventing theft of your intellectual property (patents, trademarks and copyrights), you may wish to consult the U.S. Government website, http://www.stopfakes.gov. Part of a Department of Commerce initiative, this website includes self-help "toolkits" giving innovators guidance on how to protect intellectual property in specific countries such as China, Korea and Mexico. For questions regarding patent enforcement issues, applicants may call the U.S. Government hotline at 1-866-999-HALT (1-866-999-4158).

LICENSE FOR FOREIGN FILING UNDER
Title 35, United States Code, Section 184
Title 37, Code of Federal Regulations, 5.11 & 5.15

GRANTED

The applicant has been granted a license under 35 U.S.C. 184, if the phrase "IF REQUIRED, FOREIGN FILING LICENSE GRANTED" followed by a date appears on this form. Such licenses are issued in all applications where the conditions for issuance of a license have been met, regardless of whether or not a license may be required as set forth in 37 CFR 5.15. The scope and limitations of this license are set forth in 37 CFR 5.15(a) unless an earlier license has been issued under 37 CFR 5.15(b). The license is subject to revocation upon written notification. The date indicated is the effective date of the license, unless an earlier license of similar scope has been granted under 37 CFR 5.13 or 5.14.

This license is to be retained by the licensee and may be used at any time on or after the effective date thereof unless it is revoked. This license is automatically transferred to any related applications(s) filed under 37 CFR 1.53(d). This license is not retroactive.

The grant of a license does not in any way lessen the responsibility of a licensee for the security of the subject matter as imposed by any Government contract or the provisions of existing laws relating to espionage and the national security or the export of technical data. Licensees should apprise themselves of current regulations especially with respect to certain countries, of other agencies, particularly the Office of Defense Trade Controls, Department of State (with respect to Arms, Munitions and Implements of War (22 CFR 121-128)); the Bureau of Industry and Security, Department of Commerce (15 CFR parts 730-774); the Office of Foreign Assets Control, Department of Treasury (31 CFR Parts 500+) and the Department of Energy.

NOT GRANTED

No license under 35 U.S.C. 184 has been granted at this time, if the phrase "IF REQUIRED, FOREIGN FILING LICENSE GRANTED" DOES NOT appear on this form. Applicant may still petition for a license under 37 CFR 5.12, if a license is desired before the expiration of 6 months from the filing date of the application. If 6 months has lapsed from the filing date of this application and the licensee has not received any indication of a secrecy order under 35 U.S.C. 181, the licensee may foreign file the application pursuant to 37 CFR 5.15(b).

UNITED STATES PATENT AND TRADEMARK OFFICE

Commissioner for Patents
United States Patent and Trademark Office
P.O. Box 1450
Alexandria, VA 22313-1450
www.uspto.gov

BAKER & BOTTS LLP
30 ROCKEFELLER PLAZA
44TH FLOOR
NEW YORK, NY 10112-4498

COPY MAILED

MAR 0 1 2007

OFFICE OF PETITIONS

In re Application of	:	
Myers et al.	:	
Application No. 60/814,672	:	
Filing or 371(c) Date: 06/16/2006	:	ON PETITION
Attorney Docket Number:	:	
070050.3160	:	

This is a decision on the Petition Under 37 C.F.R. 1.183, filed September 14, 2006. The petition requests waiver of the extra page fees for tables submitted on compact discs ("CDs"). The delay in treating this petition is regretted.

This Petition is hereby **dismissed**.

Any further petition to revive the above-identified application must be submitted within TWO (2) MONTHS from the mail date of this decision. Extensions of time under 37 CFR 1.136(a) are permitted. The reconsideration request should include a cover letter entitled "Request for Reconsideration of Petition under 37 CFR 1.183". This is **not** final agency action within the meaning of 5 U.S.C. § 704.

Background

The above-identified application was filed on June 16, 2006. On July 11, 2006, the Office mailed a Notice to File Missing parts of Nonprovisional Application, requiring a replacement CD, and additional page fees of $14,625.00.

Applicant files the instant petition and requests waiver of the extra page fees for tables submitted on CD.

Applicable Law, Rules and MPEP

35 U.S.C. § 41, Patent fees; patent and trademark search systems, states in pertinent part:

(a) GENERAL FEES. — The Director shall charge the following fees:
(1) FILING AND BASIC NATIONAL FEES. —

(A) On filing each application for an original patent, except for design, plant, or provisional applications, $300.
(B) On filing each application for an original design patent, $200.
(C) On filing each application for an original plant patent, $200.
(D) On filing each provisional application for an original patent, $200.
(E) On filing each application for the reissue of a patent, $300.
(F) The basic national fee for each international application filed under the treaty defined in section 351(a) of this title entering the national stage under section 371 of this title, $300.
(G) In addition, excluding any sequence listing or computer program listing filed in electronic medium as prescribed by the Director, for any application the specification and drawings of which exceed 100 sheets of paper (or equivalent as prescribed by the Director if filed in an electronic medium), $250 for each additional 50 sheets of paper (or equivalent as prescribed by the Director if filed in an electronic medium) or fraction thereof[1].

OPINION

The Director is required, under 35 U.S.C. § 41, to charge an application filing fee, and a fee for each specification and drawings of which exceed 100 sheets of paper (or equivalent as prescribed by the Director if filed in an electronic medium), $250 for each additional 50 sheets of paper (or equivalent as prescribed by the Director if filed in an electronic medium) or fraction thereof.

DECISION

Petitioner is reminded that the use of "shall" appears in 35 USC § 41 pertaining to collection of fees upon the filing of an application with the PTO. It is well settled that the use of "shall" in a statute is the language of command, and where the directions of a statute are mandatory, strict compliance with the statutory terms is essential. Farrel Corp. v. U.S. Int'l Trade Comm'n, 942 F.2d 1147, 20 USPQ2d 1912 (Fed. Cir. 1991). That is, it is mandatory that the Director charge, and the applicant pay, the fees specified by statute upon presentation of a request for a service by the PTO. See BEC Pressure Controls Corp. v. Dwyer Instruments, Inc., 380 F.Supp. 1397, 1399, 182 USPQ 190, 192 (N.D. Ind. 1974). As such, the additional page fees were due when such was submitted to the PTO. The language of the statute does not permit the Director any discretion with respect to charging the fees set forth therein. Id.

---

[1] The Office is also implementing the provision in 35 U.S.C. 41(a)(1)(G) to prescribe the paper size equivalent of an application filed in whole or in part in an electronic medium for purposes of the application size fee specified in 35 U.S.C. 41(a)(1)(G) (§ 1.16(s) and § 1.492(j)). A 21.6 cm by 27.9 cm (8½ by 11 inches) sheet of paper with a top margin of 2.0 cm (¾ inch), a left side margin of 2.5 cm (1 inch), a right side margin of 2.0 cm (¾ inch), and a bottom margin of 2.0 cm (¾ inch), will contain about 30 lines of text with double line spacing, with each line having about 50 to 65 characters. An ASCII text (the only format permitted by § 1.52(e)) document containing 30 lines of text, each line having about 50 to 65 characters, will be slightly less than two kilobytes in size. Since the Office permits text with a line spacing of 1½ (notwithstanding that ASCII does not permit 1½ line spacing), the Office is providing that each three kilobytes (rounding up) of content submitted on an electronic medium shall be counted as a sheet of paper for purposes of the application size fee specified in 35 U.S.C. 41(a)(1)(G) (§ 1.16(s) and § 1.492(j)). 70 Fed. Reg. 30360, at 3061 (May 26, 2005). *See, Also*, 37 CFR 1.52.

Further correspondence with respect to this matter should be addressed as follows:

By mail: Commissioner for Patents
PO Box 1450
Alexandria, VA 22313-1450

By FAX: (571) 273-8300
Attn: Office of Petitions

By hand: Customer Service Window
Randolph Building
401 Dulany Street
Alexandria, VA 22314

Telephone inquiries concerning this matter should be directed to the undersigned at (571) 272-3232.

Derek L. Woods
Attorney
Office of Petitions

UNITED STATES PATENT AND TRADEMARK OFFICE

Commissioner for Patents
United States Patent and Trademark Office
P.O. Box 1450
Alexandria, VA 22313-1450
www.uspto.gov

BAKER & BOTTS LLP
30 ROCKEFELLER PLAZA
44TH FLOOR
NEW YORK, NY 10112-4498

COPY MAILED

MAY 01 2007

OFFICE OF PETITIONS

In re Application of	:	
Myers et al.	:	
Application No. 60/814,672	:	CORRECTED
Filing or 371(c) Date: 06/16/2006	:	DECISION
Attorney Docket Number:	:	ON PETITION
070050.3160	:	

This is a corrected decision on the Petition Under 37 C.F.R. 1.183, filed September 14, 2006. The petition requested waiver of the extra page fees for tables submitted on compact discs ("CDs"). The correction is to clarify the status of the application.

This Petition is hereby **dismissed**.

Any further petition must be submitted within TWO (2) MONTHS from the mail date of this decision[1]. Extensions of time under 37 CFR 1.136(a) are permitted. The reconsideration request should include a cover letter entitled "Request for Reconsideration of Petition under 37 CFR 1.183". This is **not** final agency action within the meaning of 5 U.S.C. § 704.

Background

The above-identified application was filed on June 16, 2006. On July 11, 2006, the Office mailed a Notice to File Missing parts of Nonprovisional Application, requiring a replacement CD, and additional page fees of $14,625.00.

Applicant files the instant petition and requests waiver of the extra page fees for tables submitted on CD.

Applicable Law, Rules and MPEP

35 U.S.C. § 41, Patent fees; patent and trademark search systems, states in pertinent part:

(a) GENERAL FEES. — The Director shall charge the following fees:
(1) FILING AND BASIC NATIONAL FEES. —

[1] The original Decision stated that "[a]ny further petition to revive the application...." That language has been removed.

(A) On filing each application for an original patent, except for design, plant, or provisional applications, $300.
(B) On filing each application for an original design patent, $200.
(C) On filing each application for an original plant patent, $200.
(D) On filing each provisional application for an original patent, $200.
(E) On filing each application for the reissue of a patent, $300.
(F) The basic national fee for each international application filed under the treaty defined in section 351(a) of this title entering the national stage under section 371 of this title, $300.
(G) In addition, excluding any sequence listing or computer program listing filed in electronic medium as prescribed by the Director, for any application the specification and drawings of which exceed 100 sheets of paper (or equivalent as prescribed by the Director if filed in an electronic medium), $250 for each additional 50 sheets of paper (or equivalent as prescribed by the Director if filed in an electronic medium) or fraction thereof. (Emphasis supplied).

37 CFR 1.16(s), provides:

Application size fee for any application under 35 U.S.C. § 111, filed on or after December 8, 2004, the specification and drawings of which exceed 100 sheets of paper, for each additional 50 sheets or fraction thereof (see § 1.52(f) for applications submitted in whole or in part on an electronic medium):

By a small entity (§ 1.27(a))..... $125.00
By other than a small entity..... $250.00

OPINION

The Director is required, under 35 U.S.C. § 41, to charge an application filing fee, and a fee for each specification and drawings of which exceed 100 sheets of paper (or equivalent as prescribed by the Director if filed in an electronic medium), $250 for each additional 50 sheets of paper (or equivalent as prescribed by the Director if filed in an electronic medium) or fraction thereof.

DECISION

Petitioner is reminded that the use of "shall" appears in 35 USC § 41 pertaining to collection of fees upon the filing of an application with the PTO. It is well settled that the use of "shall" in a statute is the language of command, and where the directions of a statute are mandatory, strict compliance with the statutory terms is essential. Farrel Corp. v. U.S. Int'l Trade Comm'n, 942 F.2d 1147, 20 USPQ2d 1912 (Fed. Cir. 1991). That is, it is mandatory that the Director charge, and the applicant pay, the fees specified by statute upon presentation of a request for a service by the PTO. See BEC Pressure Controls Corp. v. Dwyer Instruments, Inc., 380 F.Supp. 1397, 1399, 182 USPQ 190, 192 (N.D. Ind. 1974). As such, the additional page fees were due when such was submitted to the PTO on April 15, 2005, and was paid in the correct amount. Id. The language of the statute does not permit the Director any discretion with respect to charging the fees set forth therein. Id.

Further correspondence with respect to this matter should be addressed as follows:

By mail: Commissioner for Patents
PO Box 1450
Alexandria, VA 22313-1450

By FAX: (571) 273-8300
Attn: Office of Petitions

By hand: Customer Service Window
Randolph Building
401 Dulany Street
Alexandria, VA 22314

Telephone inquiries concerning this matter should be directed to the undersigned at (571) 272-3232.

Derek L. Woods
Attorney
Office of Petitions

UNITED STATES PATENT AND TRADEMARK OFFICE

Commissioner for Patents
United States Patent and Trademark Office
P.O. Box 1450
Alexandria, VA 22313-1450
www.uspto.gov

BAKER & BOTTS LLP
30 ROCKEFELLER PLAZA
44TH FLOOR
NEW YORK, NY 10112-4498

COPY MAILED

JUL 08 2008

OFFICE OF PETITIONS

In re Application of	:	
Myers et al.	:	
Application No. 60/814,672	:	
Filing or 371(c) Date: 06/16/2006	:	DECISION
Attorney Docket Number:	:	ON PETITION
070050.3160	:	

This is a decision on the Petition, filed June 30, 2008, requesting withdrawal of the holding of abandonment. The petition is properly treated under 37 C.F.R. 1.181.

This Petition is hereby **granted**.

Background

A Decision on petition was mailed March 1, 2007, incorrectly setting a two (2) month period for reply. An attempt to correct the Decision was mailed May 1, 2007; however, the Decision mailed May 1, 2007 also improperly contained language setting a two (2) month period for reply to the Decision. A Notice of Abandonment was mailed May 12, 2008.

In view of the foregoing, the petition is granted. The holding of abandonment is hereby withdrawn.

No petition fee has been charged and none is due.

The application will be referred to the Office of Patent Application Processing for withdrawal of the holding of abandonment.

Telephone inquiries concerning this matter should be directed to the undersigned at (571) 272-3232.

Derek L. Woods
Attorney
Office of Petitions

UNITED STATES PATENT AND TRADEMARK OFFICE

Commissioner for Patents
United States Patent and Trademark Office
P.O. Box 1450
Alexandria, VA 22313-1450
www.uspto.gov

T.L. GARRETT, PLC
P.O. BOX 1065
FENTON, MI 48430

COPY MAILED

FEB 05 2007

OFFICE OF PETITIONS

In re Application of	:	
Erickson	:	
Filed: June 19, 2006	:	ON PETITION
Application No. 60/814,798	:	
Atty. Dkt. No.: TLG-00015-006	:	

This decision is in response to the "PETITION FOR CORRECTION OF FILING RECEIPT TO INCLUDE ADDITIONAL DRAWING," filed July 31, 2006. This matter is being treated as a petition to accord the above-identified application a filing date of June 19, 2006 with Fig. 3 as part of the original application as filed.

The application was filed June 19, 2006. The Notice mailed July 13, 2006 indicated that the application had been accorded a filing date but that Fig. 3 appeared to have been omitted from the application as filed.

In response, the petitioner herein argues that the application as deposited included Fig. 3 of the specification and have presented as proof of mailing and proof of receipt of the pages of specification in question a return postcard date stamped by the Office on June 19, 2006. A copy of item purportedly filed with the application was submitted herewith.

The original drawing sheet containing Fig. 3 of the specification has not been located. However, in view of the evidence presented, the petition to accord the application a filing date of June 19, 2006 is GRANTED.

Since the original of drawing sheet containing Fig. 3 of the specification cannot be located in the Office, the copy submitted herewith will be used for examination purposes.

No petition fee is due in connection with this matter. A refund has been requested on petitioner's behalf.

This application will be returned to the Office of Initial Patent Examination for further processing with a filing date of June 19, 2006.

Telephone inquiries related to this decision may be directed to the undersigned at (571) 272-3205.

Alesia M. Brown
Petitions Attorney
Office of Petitions

UNITED STATES PATENT AND TRADEMARK OFFICE

Commissioner for Patents
United States Patent and Trademark Office
P.O. Box 1450
Alexandria, VA 22313-1450
www.uspto.gov

COPY MAILED
OCT 0 2 2006
OFFICE OF PETITIONS

TOWNSEND AND TOWNSEND AND CREW, LLP
TWO EMBARCADERO CENTER
EIGHTH FLOOR
SAN FRANCISCO, CA 94111-3834

In re Application of	:	
Ayman Hammad	:	
Application No. 60/815,059	:	DECISION GRANTING PETITION
Filed: June 19, 2006	:	
Attorney Docket No. 1622U-024400US	:	

This is concerning the petition under 37 CFR 1.53 to accord the application a filing date.

On June 19, 2006, the application was deposited.

On July 12, 2006, the Office of Initial Patent Examination mailed a Notice stating that drawings were not present, but were believed to be required, and that a filing date had not been accorded the application. The Notice further indicated that the filing date would be the date of receipt of the drawings. The instant petition was filed on August 18, 2006, asserting that drawings were not necessary to understand the invention claimed, and requesting a filing date of June 19, 2006.

The Office has determined that drawings are not necessary to understand at least one claim within the meaning of the first sentence of 35 USC 113. It has been PTO practice to treat an application that contains at least one process or method claim as an application for which a drawing is not necessary for an understanding of the invention under 35 U.S.C. 113 (first sentence). A review of the record reveals that several of the claims in the subject application are method claims. Therefore, the present application is deemed to be an application that does not require a drawing for an understanding of the invention. Accordingly, the application, as filed, is entitled to a filing date.

In view of the above, the petition is **granted.**

The petition fee of $400.00 will be refunded in due course.

The application is being forwarded to the Office of Initial Patent Examination for further processing with a filing date of June 19,2 006. **A filing receipt should be issued reflecting the application filing date of June 19, 2006.**

Any inquiries related to this decision should be directed to the undersigned at (571) 272-3222.

Kenya A. McLaughlin
Petitions Attorney
Office of Petitions

UNITED STATES PATENT AND TRADEMARK OFFICE

UNITED STATES DEPARTMENT OF COMMERCE
United States Patent and Trademark Office
Address: COMMISSIONER FOR PATENTS
P.O. Box 1450
Alexandria, Virginia 22313-1450
www.uspto.gov

APPL NO.	FILING OR 371 (c) DATE	ART UNIT	FIL FEE REC'D	ATTY.DOCKET NO	DRAWINGS	TOT CLMS	IND CLMS
60/815,399	06/20/2006		100	34419-504 PRO			

CONFIRMATION NO. 4361

CORRECTED FILING RECEIPT

OC000000019979095

35437
MINTZ LEVIN COHN FERRIS GLOVSKY & POPEO
666 THIRD AVENUE
NEW YORK, NY 10017

Date Mailed: 08/10/2006

Receipt is acknowledged of this provisional Patent Application. It will not be examined for patentability and will become abandoned not later than twelve months after its filing date. Be sure to provide the U.S. APPLICATION NUMBER, FILING DATE, NAME OF APPLICANT, and TITLE OF INVENTION when inquiring about this application. Fees transmitted by check or draft are subject to collection. Please verify the accuracy of the data presented on this receipt. **If an error is noted on this Filing Receipt, please mail to the Commissioner for Patents P.O. Box 1450 Alexandria Va 22313-1450. Please provide a copy of this Filing Receipt with the changes noted thereon. If you received a "Notice to File Missing Parts" for this application, please submit any corrections to this Filing Receipt with your reply to the Notice. When the USPTO processes the reply to the Notice, the USPTO will generate another Filing Receipt incorporating the requested corrections (if appropriate).**

Applicant(s)

Mark Weinreb, Melville, NY;
Wayne A. Marasco, Boston, MA;

Power of Attorney:

Eric Sinn–40177

If Required, Foreign Filing License Granted: 07/13/2006

The country code and number of your priority application, to be used for filing abroad under the Paris Convention, is US60/815,399

Projected Publication Date: None, application is not eligible for pre-grant publication

Non-Publication Request: Not applicable

Early-Publication Request: Not applicable

**** SMALL ENTITY ****

Title

Processing procedure for peripheral blood stem cells

PROTECTING YOUR INVENTION OUTSIDE THE UNITED STATES

Since the rights granted by a U.S. patent extend only throughout the territory of the United States and have no effect in a foreign country, an inventor who wishes patent protection in another country must apply for a patent in a specific country or in regional patent offices. Applicants may wish to consider the filing of an international application under the Patent Cooperation Treaty (PCT). An international (PCT) application generally has the same effect as a regular national patent application in each PCT-member country. The PCT process **simplifies** the filing of patent applications on the same invention in member countries, but **does not result** in a grant of "an international patent" and does not eliminate the need of applicants to file additional documents and fees in countries where patent protection is desired.

Almost every country has its own patent law, and a person desiring a patent in a particular country must make an application for patent in that country in accordance with its particular laws. Since the laws of many countries differ in various respects from the patent law of the United States, applicants are advised to seek guidance from specific foreign countries to ensure that patent rights are not lost prematurely.

Applicants also are advised that in the case of inventions made in the United States, the Director of the USPTO must issue a license before applicants can apply for a patent in a foreign country. The filing of a U.S. patent application serves as a request for a foreign filing license. The application's filing receipt contains further information and guidance as to the status of applicant's license for foreign filing.

Applicants may wish to consult the USPTO booklet, "General Information Concerning Patents" (specifically, the section entitled "Treaties and Foreign Patents") for more information on timeframes and deadlines for filing foreign patent applications. The guide is available either by contacting the USPTO Contact Center at 800-786-9199, or it can be viewed on the USPTO website at http://www.uspto.gov/web/offices/pac/doc/general/index.html.

For information on preventing theft of your intellectual property (patents, trademarks and copyrights), you may wish to consult the U.S. Government website, http://www.stopfakes.gov. Part of a Department of Commerce initiative, this website includes self-help "toolkits" giving innovators guidance on how to protect intellectual property in specific countries such as China, Korea and Mexico. For questions regarding patent enforcement issues, applicants may call the U.S. Government hotline at 1-866-999-HALT (1-866-999-4158).

LICENSE FOR FOREIGN FILING UNDER
Title 35, United States Code, Section 184
Title 37, Code of Federal Regulations, 5.11 & 5.15

GRANTED

The applicant has been granted a license under 35 U.S.C. 184, if the phrase "IF REQUIRED, FOREIGN FILING LICENSE GRANTED" followed by a date appears on this form. Such licenses are issued in all applications where the conditions for issuance of a license have been met, regardless of whether or not a license may be required as set forth in 37 CFR 5.15. The scope and limitations of this license are set forth in 37 CFR 5.15(a) unless an earlier license has been issued under 37 CFR 5.15(b). The license is subject to revocation upon written notification. The date indicated is the effective date of the license, unless an earlier license of similar scope has been granted under 37 CFR 5.13 or 5.14.

This license is to be retained by the licensee and may be used at any time on or after the effective date thereof unless it is revoked. This license is automatically transferred to any related applications(s) filed under 37 CFR 1.53(d). This license is not retroactive.

The grant of a license does not in any way lessen the responsibility of a licensee for the security of the subject matter as imposed by any Government contract or the provisions of existing laws relating to espionage and the national security or the export of technical data. Licensees should apprise themselves of current regulations especially with respect to certain countries, of other agencies, particularly the Office of Defense Trade Controls, Department of State (with respect to Arms, Munitions and Implements of War (22 CFR 121-128)); the Bureau of Industry and Security, Department of Commerce (15 CFR parts 730-774); the Office of Foreign Assets Control, Department of Treasury (31 CFR Parts 500+) and the Department of Energy.

NOT GRANTED

No license under 35 U.S.C. 184 has been granted at this time, if the phrase "IF REQUIRED, FOREIGN FILING LICENSE GRANTED" DOES NOT appear on this form. Applicant may still petition for a license under 37 CFR 5.12, if a license is desired before the expiration of 6 months from the filing date of the application. If 6 months has lapsed from the filing date of this application and the licensee has not received any indication of a secrecy order under 35 U.S.C. 181, the licensee may foreign file the application pursuant to 37 CFR 5.15(b).

UNITED STATES PATENT AND TRADEMARK OFFICE

Commissioner for Patents
United States Patent and Trademark Office
P.O. Box 1450
Alexandria, VA 22313-1450
www.uspto.gov

BAMBI FAIVRE WALTERS
PO BOX 3822
CARY NC 27519

COPY MAILED

DEC 2 6 2006

OFFICE OF PETITIONS

In re Application of
Thomas Brothers
Application No. 60/815,405
Filed: June 21, 2006
Attorney Docket Number: BS060183PROV

: DECISION GRANTING
: PETITION

This is a decision on the petition filed November 14, 2006, under 37 CFR 1.53, in response to the Notice of Incomplete Provisional Application mailed July 20, 2006, requesting that the above identified application be accorded a filing date of June 21, 2006.

On June 21, 2006, the application was filed. On November July 20, 2006, the Office of Initial Patent Examination mailed a "Notice of Incomplete Povisional Application" stating that the application had not been accorded a filing date because the application was deposited without drawings and that the filing date of the application would be the date of receipt of the drawings.

The instant petition claims that one informal sheet of drawings was included as APPENDIX B and was filed with the other application papers on June 21, 2006. Petitioner proffers as proof of submission of drawings, a postcard receipt which shows an official USPTO date-stamp of June 21, 2006, and the above-identified application number, and acknowledges receipt of, *inter alia*, 1 sheet of informal drawings ass having been supplied with the application papers filed June 21, 2006.

Upon review of the record, APPENDIX B is of record and contains the one sheet of informal drawings. The evidence is therefore convincing that the application papers deposited on June 21, 2006 included drawings and thus the application was complete on filing and entitled to a filing date of June 21, 2006.

In view of the above, the petition is **GRANTED**.

The Notice of Incomplete Nonprovisional Application mailed July 20, 2006 is withdrawn. While the petition indicates that the petition fee in the amount of $400 was to be

charged to an American Express Card, our records don't show that it was actually charged. Since no fees are due and since no charges were actually made, no refund need be issued.

The application is being returned to the Office of Initial Patent Examination for reprocessing with a filing date of June 21, 2006, using the application papers filed on June 21, 2006 including the informal drawing sheet contained in APPENDIX B, a copy of which was supplied with the instant petition.

Telephone inquiries related to this decision should be directed to the undersigned Petitions Attorney at (571) 272-3212.

Patricia Faison-Ball

Patricia Faison-Ball
Senior Petitions Attorney
Office of Petitions

UNITED STATES PATENT AND TRADEMARK OFFICE

Commissioner for Patents
United States Patent and Trademark Office
P.O. Box 1450
Alexandria, VA 22313-1450
www.uspto.gov

COPY MAILED
SEP 25 2006
OFFICE OF PETITIONS

EDGAR SPIELMAN
ALBEMARLE CORPORATION
451 FLORIDA BLVD
BATON ROUGE LA 70801

In re Application of	:	
Herbiet, et al.	:	
Application No. 60/815,426	:	DECISION ON PETITION
Filed: June 21, 2006	:	
Attorney Docket No. F2-7570	:	

This is a decision on the petition filed July 31, 2006, to accord the above-identified application a filing date of June 21, 2006.

The petition is **GRANTED**.

The application was deposited on June 21, 2006. However, on July 20, 2006, the Initial Patent Examination Division mailed a "Notice of Incomplete Provisional Application", notifying applicants that the application papers had not been accorded a filing dated because the application was deposited without drawings, and stating that the filing date of the application would be the date of receipt of the omitted drawings.

As stated in MPEP 601.01(f), it is the practice of the PTO to treat a provisional application that contains at least some disclosure of a process or method as an application for which a drawing is not necessary for an understanding of the invention under 35 U.S.C. 113 (first sentence).

MPEP 601.01(f) also states that:

> A nonprovisional application having at least one claim, or a provisional application having at least some disclosure, directed to the subject matter discussed above for which a drawing is usually not considered essential for a filing date, describing drawing figure(s) in the specification, but filed without drawings will be treated as an application filed without all of the drawing figures referred to in the specification as discussed in MPEP 601.01(g), so long as the application contains something that can be construed as a written description and the name of all the inventors.

The instant provisional application contains claims directed to a composition. Therefore, the application should have been treated as an application filed without all of the drawing figures referred to in the specification as discussed in MPEP 601.01(g).

In view of the above, the "Notice of Incomplete Provisional Application" mailed July 20, 2006, was mailed in error and is hereby **vacated**.

The drawings submitted with the instant petition will remain in the file, but will not be considered to have been filed on June 21, 2006.

As the instant petition was due to USPTO error, the $400 petition fee has been refunded to Deposit Account No. 01-0659.

The application is being forwarded to the Office of Initial Patent Examination for further processing as a provisional application with a filing date of June 21, 2006, and for indication on the file wrapper label to show that "0" sheets of drawings were present on filing.

Telephone inquiries specific to this decision may be directed to the undersigned at (571)272-3207.

Cliff Congo
Petitions Attorney
Office of Petitions

UNITED STATES PATENT AND TRADEMARK OFFICE

Commissioner for Patents
United States Patent and Trademark Office
P.O. Box 1450
Alexandria, VA 22313-1450
www.uspto.gov

EDGAR SPIELMAN
ALBEMARLE CORPORATION
451 FLORIDA BLVD.
BATON ROUGE LA 70801

COPY MAILED
OCT 1 3 2006
OFFICE OF PETITIONS

In re Application of :
Herbiet, et al. :
Application No. 60/815,515 : ON PETITION
Deposit date: June 21, 2006 :
Attorney Docket No. F2-7569 :
For: IMPROVED PROCESS FOR THE PRODUCTION OF ALUMINUM HYDROXIDE

This is a decision on the petition filed August 30, 2006 to accord a filing date of June 21, 2006 to the above-identified application.

The application was deposited on June 21, 2006. However, on August 2, 2006, the Office of Initial Patent Examination mailed a "Notice of Incomplete Provisional Application" requiring drawings of applicants' invention and stating that the filing date would be the date of receipt of the omitted drawing(s). It is noted that the specification filed on June 21, 2006 refers to a drawing figure.

As stated in MPEP 601.01(f), it is the practice of the United States Patent and Trademark Office (PTO) to treat an application that contains at least one process or method claim as an application for which a drawing is not necessary for an understanding of the invention under 35 U.S.C. 113 (first sentence.)

MPEP 601.01(f) also states that:

> ... [A] provisional application having at least some disclosure ...for which a drawing is usually not considered essential for a filing date, describing drawing figures in the specification, and filed without drawings will be treated as an application filed without all of the drawing figures referred to in the specification as discussed in MPEP 601.01(g), so long as the application contains something that can be construed as a written description.

This provisional application contains process claims and a detailed written description. Therefore, the application should have been accorded a filing date without drawings.

In view of the above, the "Notice" mailed August 2, 2006 was mailed in error and is hereby withdrawn. The application is entitled to a filing date of June 21, 2006. The petition is **granted**.

Pursuant to petitioners' request, the $400.00 petition fee will be credited to deposit account no. 01-0659.

Petitioners admit that figures were inadvertently not filed on June 21, 2006. Petitioners seek to add the omitted figures to the present application. However, it is not permissible to amend a provisional application. 37 CFR 1.53(c). Therefore, the 6 sheets of drawings supplied with the instant petition will **not** be processed.

The application is being returned to the Office of Initial Patent Examination for further processing with a filing date of June 21, 2006 and for indication in PTO records that "0" sheets of drawings were present on filing.

Telephone inquiries specific to this matter should be directed to the undersigned at (571) 272-3230.

Shirene Willis Brantley

Shirene Willis Brantley
Petitions Attorney
Office of Petitions

UNITED STATES PATENT AND TRADEMARK OFFICE

Commissioner for Patents
United States Patent and Trademark Office
P.O. Box 1450
Alexandria, VA 22313-1450
www.uspto.gov

FITZPATRICK CELLA HARPER & SCINTO
30 ROCKEFELLER PLAZA
NEW YORK, NY 10112

COPY MAILED
OCT 1 2 2006
OFFICE OF PETITIONS

In re Application of :
Unlu, et al. :
Application No. 60/815,682 : DECISION ON PETITION
Filed: June 21, 2006 :
Attorney Docket No. 02280.003950 :

This is a decision on the petition under 37 CFR 1.10(d), filed August 8, 2006, to accord the application a filing date of June 21, 2006.

The petition is **granted**.

The record reflects that the subject application arrived at the Patent and Trademark Office in an Express Mail envelope with Express Mail label EV095152180US showing a date-in of June 22, 2006. By the instant petition, the argument is made that the application should have been accorded a filing date of June 21, 2006, as that was date the application was deposited with the United States Postal service (USPS) Express Mail service.

Title 37, Section 1.10(d) of the Code of Federal Regulations reads, in pertinent part:

> Any person filing correspondence under this section that was received by the Office and delivered by the "Express Mail Post Office to Addressee" service of the USPS who can show that the "date-in" on the "Express Mail" mailing label or other official notation entered by the USPS was incorrectly entered or omitted by the USPS, may petition the Commissioner to accord the correspondence a filing date as of the date the correspondence is shown to have been deposited with the USPS, provided that:
>
> (1) The petition is filed promptly after the person becomes aware that the Office has accorded or will accord, a filing date based upon an incorrect entry by USPS;
>
> (2) The number of the "Express Mail" mailing label was placed on the paper(s) or fee(s) that constitute the correspondence prior to the original mailing by "Express Mail"; and
>
> (3) The petition includes a showing which establishes, to the satisfaction of the Commissioner, that the requested filing date was the date the correspondence was deposited in the "Express Mail Post Office to Addressee" service prior to the last scheduled pickup for that day. Any showing pursuant to this paragraph must be corroborated by evidence from the USPS or that came into being after deposit within one business day of the deposit of the correspondence in the "Express Mail Post Office to Addressee" service of the USPS.

All of the above requirements have been met. The application will, therefore, be accorded a filing date of June 21, 2006.

The application file is being forwarded to the Office of Initial Patent Examination where the application will be accorded a filing date of June 21, 2006, and a corrected filing receipt generated.

Telephone injuries regarding this decision should be directed to the undersigned at (571) 272-3222.

Kenya A. McLaughlin
Petitions Attorney
Office of Petitions

UNITED STATES PATENT AND TRADEMARK OFFICE

COMMISSIONER FOR PATENTS
UNITED STATES PATENT AND TRADEMARK OFFICE
P.O. BOX 1450
ALEXANDRIA, VA 22313-1450
www.uspto.gov

FITZPATRICK CELLA HARPER & SCINTO
30 ROCKEFELLER PLAZA
NEW YORK, NY 10112

COPY MAILED

JUN 05 2007

OFFICE OF PETITIONS

In re Application of	:	
Emine Unlu, et. al.	:	
Application No. 60/815,686	:	DECISION GRANTING
Filed: June 21, 2006	:	PETITION
Attorney Docket No. 02280.003960	:	

This is a decision on the petition filed August 8, 2006, requesting that the above-identified application be accorded a filing date of June 21, 2006, rather than the presently accorded date of June 22, 2006.

Petitioner alleges that the United States Postal Service (USPS) inadvertently failed to fill in the "date in" section on the Express Mail label. Petitioner also states that the round stamp used by the USPS, which evidenced the June 21, 2006 date of deposit, was defective and produced an almost illegible mark on the customer copy. In support, petitioner provided a statement from the Customer Service Supervisor of the USPS, who corroborates the statement that the round stamp was defective and that the actual date did not appear on the customer copy. It is also noted that USPS Track and Confirm search results show that Express Mail No. EV095153675US was accepted and enroute on June 22, 2006. The Provisional Application Coversheet contained the same Express Mail number.

The Office considers the date the paper or fee is shown to have been deposited as "Express Mail" to be the "date-in" on the Express Mail label, MPEP 513. However, since the original date stamp on the Express Mailing Label for this application was defective and illegible, petitioner must rely on "other official USPS notation", such as the re-stamped customer copy and the statement from the USPS to prove that the package in question was actually accepted on June 21, 2006.

Paragraph (c) of 37 CFR 1.10 (c) states:

> Any person filing correspondence under this section that was received by the Office and delivered by the "Express Mail Post Office to Addressee" service of the USPS, who can show that there is a discrepancy between the filing date accorded by the Office to the correspondence and the date of deposit as shown by the "date-in " on the "Express Mail" mailing label or other official USPS notation, may petition the Director to accord the correspondence a filing date as of the "date-in " on the "Express Mail " mailing label or other official USPS notation, provided that:

(1) The petition is filed promptly after the person becomes aware that the Office has accorded, or will accord, a filing date other than the USPS deposit date;
(2) The number of the "Express Mail " mailing label was placed on the paper(s) or fee(s) that constitute the correspondence prior to the original mailing by "Express Mail"; and
(3) The petition includes a true copy of the "Express Mail " mailing label showing the "date-in", and of any other official notation by the USPS relied upon to show the date of deposit.

Since the evidence is convincing that the application was accepted on June 21, 2006, the petition is **GRANTED**.

This application file is being forwarded to the Office of Initial Patent Examination (OIPE) **for correction of the filing date to June 21, 2006 and for issuance of a corrected filing receipt**.

Telephone inquiries relating to this decision should be directed Andrea Smith at (571) 272-3226. Telephone inquiries related to OIPE processing should be directed to their hotline at (571) 272-4000.

Frances Hicks
Petitions Examiner
Office of Petitions

UNITED STATES PATENT AND TRADEMARK OFFICE

Commissioner for Patents
United States Patent and Trademark Office
P.O. Box 1450
Alexandria, VA22313-1450
www.uspto.gov

FISH & RICHARDSON PC
P.O. BOX 1022
MINNEAPOLIS MN 55440-1022

COPY MAILED

MAR 3 0 2007

OFFICE OF PETITIONS

In re Application of
Kevin C. O'Connor et al. :
Application No. 60/815,698 : ON PETITION
Filed: June 22, 2006 :
Attorney Docket Number: **05311-046P01 / BWH 1211** :

This is a decision on the petition under 37 CFR 1.182 filed November 13, 2006, to Correct the Name of the Inventor due to marriage.

The petition is **GRANTED**.

Petitioner has requested that the inventor formerly known as Katherine Weichsel be listed as Katherine McLaughlin. The petition fee, an ADS identifying the inventor as Katherine McLaughlin and of how the change was effected, marriage, has been submitted in compliance with 37 CFR 1.182.

In view of the instant request, the following inventor name data will be changed.

Inventor 4) Katherine McLaughlin

This matter is being referred to the Office of Initial Patent Examination for further processing.

Telephone inquiries concerning this matter should be directed to the undesigned Petitions Attorney at (571) 272-3212.

Patricia Faison-Ball

Patricia Faison-Ball
Senior Petitions Attorney
Office of Petitions

ATTACHMENT: Corrected Filing Receipt

UNITED STATES PATENT AND TRADEMARK OFFICE

UNITED STATES DEPARTMENT OF COMMERCE
United States Patent and Trademark Office
Address: COMMISSIONER FOR PATENTS
P.O. Box 1450
Alexandria, Virginia 22313-1450
www.uspto.gov

APPL NO.	FILING OR 371(c) DATE	ART UNIT	FIL FEE REC'D	ATTY.DOCKET NO	TOT CLMS	IND CLMS
60/815,698	06/22/2006		100	05311-046P01 / BWH 1211		

CONFIRMATION NO. 4792

CORRECTED FILING RECEIPT

OC000000023140269

26161
FISH & RICHARDSON PC
P.O. BOX 1022
MINNEAPOLIS, MN 55440-1022

Date Mailed: 03/28/2007

Receipt is acknowledged of this provisional Patent Application. It will not be examined for patentability and will become abandoned not later than twelve months after its filing date. Be sure to provide the U.S. APPLICATION NUMBER, FILING DATE, NAME OF APPLICANT, and TITLE OF INVENTION when inquiring about this application. Fees transmitted by check or draft are subject to collection. Please verify the accuracy of the data presented on this receipt. **If an error is noted on this Filing Receipt, please mail to the Commissioner for Patents P.O. Box 1450 Alexandria Va 22313-1450. Please provide a copy of this Filing Receipt with the changes noted thereon. If you received a "Notice to File Missing Parts" for this application, please submit any corrections to this Filing Receipt with your reply to the Notice. When the USPTO processes the reply to the Notice, the USPTO will generate another Filing Receipt incorporating the requested corrections (if appropriate).**

Applicant(s)

Kevin C. O'Connor, Braintree, MA;
David A. Hafler, Newton, MA;
Kai W. Wucherpfennig, Brookline, MA;
Katherine McLaughlin, Brookline, MA;
William H. Robinson, Palo Alto, CA;
Lawrence Steinman, Stanford, CA;

Power of Attorney:

Janice DeYoung–50429

If Required, Foreign Filing License Granted: 07/17/2006

The country code and number of your priority application, to be used for filing abroad under the Paris Convention, is US60/815,698

Projected Publication Date: None, application is not eligible for pre-grant publication

Non-Publication Request: Not applicable

Early-Publication Request: Not applicable

**** SMALL ENTITY ****

Title

Diagnosis of autoimmune disease

PROTECTING YOUR INVENTION OUTSIDE THE UNITED STATES

Since the rights granted by a U.S. patent extend only throughout the territory of the United States and have no effect in a foreign country, an inventor who wishes patent protection in another country must apply for a patent in a specific country or in regional patent offices. Applicants may wish to consider the filing of an international application under the Patent Cooperation Treaty (PCT). An international (PCT) application generally has the same effect as a regular national patent application in each PCT-member country. The PCT process **simplifies** the filing of patent applications on the same invention in member countries, but **does not result** in a grant of "an international patent" and does not eliminate the need of applicants to file additional documents and fees in countries where patent protection is desired.

Almost every country has its own patent law, and a person desiring a patent in a particular country must make an application for patent in that country in accordance with its particular laws. Since the laws of many countries differ in various respects from the patent law of the United States, applicants are advised to seek guidance from specific foreign countries to ensure that patent rights are not lost prematurely.

Applicants also are advised that in the case of inventions made in the United States, the Director of the USPTO must issue a license before applicants can apply for a patent in a foreign country. The filing of a U.S. patent application serves as a request for a foreign filing license. The application's filing receipt contains further information and guidance as to the status of applicant's license for foreign filing.

Applicants may wish to consult the USPTO booklet, "General Information Concerning Patents" (specifically, the section entitled "Treaties and Foreign Patents") for more information on timeframes and deadlines for filing foreign patent applications. The guide is available either by contacting the USPTO Contact Center at 800-786-9199, or it can be viewed on the USPTO website at http://www.uspto.gov/web/offices/pac/doc/general/index.html.

For information on preventing theft of your intellectual property (patents, trademarks and copyrights), you may wish to consult the U.S. Government website, http://www.stopfakes.gov. Part of a Department of Commerce initiative, this website includes self-help "toolkits" giving innovators guidance on how to protect intellectual property in specific countries such as China, Korea and Mexico. For questions regarding patent enforcement issues, applicants may call the U.S. Government hotline at 1-866-999-HALT (1-866-999-4158).

LICENSE FOR FOREIGN FILING UNDER
Title 35, United States Code, Section 184
Title 37, Code of Federal Regulations, 5.11 & 5.15

GRANTED

The applicant has been granted a license under 35 U.S.C. 184, if the phrase "IF REQUIRED, FOREIGN FILING LICENSE GRANTED" followed by a date appears on this form. Such licenses are issued in all applications where the conditions for issuance of a license have been met, regardless of whether or not a license may be required as set forth in 37 CFR 5.15. The scope and limitations of this license are set forth in 37 CFR 5.15(a) unless an earlier license has been issued under 37 CFR 5.15(b). The license is subject to revocation upon written notification. The date indicated is the effective date of the license, unless an earlier license of similar scope has been granted under 37 CFR 5.13 or 5.14.

This license is to be retained by the licensee and may be used at any time on or after the effective date thereof unless it is revoked. This license is automatically transferred to any related applications(s) filed under 37 CFR 1.53(d). This license is not retroactive.

The grant of a license does not in any way lessen the responsibility of a licensee for the security of the subject matter as imposed by any Government contract or the provisions of existing laws relating to espionage and the national security or the export of technical data. Licensees should apprise themselves of current regulations especially with respect to certain countries, of other agencies, particularly the Office of Defense Trade Controls, Department of State (with respect to Arms, Munitions and Implements of War (22 CFR 121-128)); the Bureau of Industry and Security, Department of Commerce (15 CFR parts 730-774); the Office of Foreign Assets Control, Department of Treasury (31 CFR Parts 500+) and the Department of Energy.

NOT GRANTED

No license under 35 U.S.C. 184 has been granted at this time, if the phrase "IF REQUIRED, FOREIGN FILING LICENSE GRANTED" DOES NOT appear on this form. Applicant may still petition for a license under 37 CFR 5.12, if a license is desired before the expiration of 6 months from the filing date of the application. If 6 months has lapsed from the filing date of this application and the licensee has not received any indication of a secrecy order under 35 U.S.C. 181, the licensee may foreign file the application pursuant to 37 CFR 5.15(b).

UNITED STATES PATENT AND TRADEMARK OFFICE

COMMISSIONER FOR PATENTS
UNITED STATES PATENT AND TRADEMARK OFFICE
P.O. BOX 1450
ALEXANDRIA, VA 22313-1450
www.uspto.gov

FITZPATRICK CELLA HARPER & SCINTO
30 ROCKEFELLER PLAZA
NEW YORK, NY 10112

COPY MAILED

JUN 05 2007

OFFICE OF PETITIONS

In re Application of	:	
Emine Unlu, et. al.	:	
Application No. 60/815,713	:	DECISION GRANTING
Filed: June 21, 2006	:	PETITION
Attorney Docket No. 02280.003970	:	

This is a decision on the petition filed August 9, 2006, requesting that the above-identified application be accorded a filing date of June 21, 2006, rather than the presently accorded date of June 22, 2006.

Petitioner alleges that the United States Postal Service (USPS) inadvertently failed to fill in the "date in" section on the Express Mail label. Petitioner also states that the round stamp used by the USPS, which evidenced the June 21, 2006 date of deposit, was defective and produced an almost illegible mark on the customer copy. In support, petitioner provided a statement from the Customer Service Supervisor of the USPS, who corroborates the statement that the round stamp was defective and that the actual date did not appear on the customer copy. It is also noted that USPS Track and Confirm search results show that Express Mail No. EV095152366US was accepted and enroute on June 22, 2006. The Provisional Application Coversheet contained the same Express Mail number.

The Office considers the date the paper or fee is shown to have been deposited as "Express Mail" to be the "date-in" on the Express Mail label, MPEP 513. However, since the original date stamp on the Express Mailing Label for this application was defective and illegible, petitioner must rely on "other official USPS notation", such as the re-stamped customer copy and the statement from the USPS to prove that the package in question was actually accepted on June 21, 2006.

Paragraph (c) of 37 CFR 1.10 (c) states:

> Any person filing correspondence under this section that was received by the Office and delivered by the "Express Mail Post Office to Addressee" service of the USPS, who can show that there is a discrepancy between the filing date accorded by the Office to the correspondence and the date of deposit as shown by the "date-in " on the "Express Mail" mailing label or other official USPS notation, may petition the Director to accord the correspondence a filing date as of the "date-in " on the "Express Mail " mailing label or other official USPS notation, provided that:

(1) The petition is filed promptly after the person becomes aware that the Office has accorded, or will accord, a filing date other than the USPS deposit date;
(2) The number of the "Express Mail " mailing label was placed on the paper(s) or fee(s) that constitute the correspondence prior to the original mailing by "Express Mail"; and
(3) The petition includes a true copy of the "Express Mail " mailing label showing the "date-in", and of any other official notation by the USPS relied upon to show the date of deposit.

Since the evidence is convincing that the application was accepted on June 21, 2006, the petition is **GRANTED**.

This application file is being forwarded to the Office of Initial Patent Examination (OIPE) for further processing.

Telephone inquiries relating to this decision should be directed Andrea Smith at (571) 272-3226. Telephone inquiries related to OIPE processing should be directed to their hotline at (571) 272-4000.

Frances Hicks
Petitions Examiner
Office of Petitions

UNITED STATES PATENT AND TRADEMARK OFFICE

Commissioner for Patents
United States Patent and Trademark Office
P.O. Box 1450
Alexandria, VA 22313-1450
www.uspto.gov

BAKER & BOTTS
30 ROCKEFELLER PLAZA
44TH FLOOR
NEW YORK NY 10112

COPY MAILED

OCT 0 2 2006

OFFICE OF PETITIONS

In re Application of Von Gutfeld et al.	:	
Application No. 60/815,790 Filed: June 22, 2006 Attorney Docket No. 070050.3130	:	DECISION ON PETITION

This is in response to the petition filed August 18, 2006, requesting to accept figures 1-17 as part of the original disclosure received in the Office on June 22, 2006.

Application papers in the above-identified provisional application were filed on June 22, 2006. However, on July 18, 2006, the Office of Initial Patent Examination mailed a "Notice of Omitted Item(s) in Provisional Application ",stating that the application had been accorded a filing date of June 22, 2006 and advising applicant that figures 1-17 as described in the specification appeared to have been omitted.

In response, on August 18, 2006, the present petition was filed. Petitioner does not contend the omitted figures were submitted. However, petitioner contends that the above-identified application incorporated by reference PCT International Application No. PCT/US06/04329 which contains the same drawings. Thus, petitioner contends the drawings should be entered because they do not constitute new matter.

Application papers not present in this application on filing cannot be considered part of the original application disclosure.

The filing date of a provisional application is the date on which a specification as prescribed by the first paragraph of 35 U.S.C. 112, and any drawing required by § 1.81(a) are filed in the Patent and Trademark Office. No amendment, other than to

make the provisional application comply with the patent statute and all applicable regulations, may be made to the provisional application after the filing date of the provisional application. See 35 U.S.C. 111(b)(4) and 37 C.F.R. 1.53(c). Thus, in a provisional application, petitioner does not have the option of amending the application to include figures on the basis that those figures do not constitute new matter.

Furthermore, with regard to omitted figures in provisional applications, MPEP 601.01(d) specifically provides that:

> The submission of omitted page(s) or drawing(s) in a nonprovisional application and acceptance of the date of such submission as the application filing date is tantamount to simply filing a new application. Thus, applicants should consider filing a new application as an alternative to submitting a petition under 37 C.F.R. 1.182 (with the petition fee under 37 C.F.R. 1.17(h)) with any omitted page(s) or drawing(s), which is a cost effective alternative in instances in which a nonprovisional application is deposited without filing fees. Likewise, in view of the relatively low filing fee for provisional applications, and the USPTO's desire to minimize the processing of provisional applications, the USPTO will not grant petitions under 37 C.F.R. 1.182 to accept omitted page(s) or drawing(s) and accord an application filing date as of the date of such submission in provisional applications. The applicant should simply file a new completed provisional application.

Thus, it is concluded that applicants do not have the option of amending this provisional application to include the inadvertently omitted figures.

The petition is **Dismissed**.

The petition fee will not be refunded because it was not necessitated by Office error.

The drawings containing figures 1-17 submitted August 18, 2006 will **not** be entered.

The application will maintain a filing date of **June 22, 2006**

using the application papers deposited on that date.

Telephone inquiries related to this decision may be directed to the undersigned at (571) 272-3215.

Charlema R. Grant

Charlema R. Grant
Petitions Attorney
Office of Petitions

UNITED STATES PATENT AND TRADEMARK OFFICE

Commissioner for Patents
United States Patent and Trademark Office
P.O. Box 1450
Alexandria, VA 22313-1450
www.uspto.gov

EVEREST INTELLECTUAL
PROPERTY LAW GROUP
P. O. BOX 708
NORTHBROOK IL 60065

COPY MAILED

MAY 1 9 2008

OFFICE OF PETITIONS

In re Application of :
Anderson, et al. :
Application No. 60/815,806 : DECISION
Filed: 22 June, 2006 :
Attorney Docket 115207-003 :

This is a decision on the petition filed on 22 June, 2007, to revive an application under 37 C.F.R. §1.137(b) as having been abandoned due to unintentional delay.

The Office regrets the delay in addressing this matter, however, the instant petition was presented to the attorneys in the Office of Petitions only at this writing.

The petition under 37 C.F.R. §1.137(b) is **GRANTED**.

As to the Allegations
of Unintentional Delay

The requirements of a grantable petition pursuant to 37 C.F.R. §1.137(b) are the petition and fee therefor, a reply (here in the form of fees due), a proper statement of unintentional delay under the regulation, and, where applicable, a terminal disclaimer and fee. (However, no terminal disclaimer and fee are due here.)

It appears that Petitioner has satisfied the requirements of the regulation, to wit:

BACKGROUND

The record reflects that:

Petitioner failed to reply timely and properly to the Notice of Missing Parts (fees) mailed on 18 July, 2006, with reply due absent an extension of time on or before 18 September, 2006.

The application went abandoned by operation of law after midnight 18 September, 2006.

The Office mailed the Notice of Abandonment on 27 March, 2007.

On 22 June, 2007, Petitioner filed the instant petition with fee and, *inter alia*, a reply in the form of fees dues, and made a proper statement of unintentional delay.

The availability of applications and application papers online to applicants/practitioners who diligently associate their Customer Number with the respective application(s) now provides an applicant/practitioner on-demand information as to events/transactions in an application. Thus, now if one wishes to know the progress in and/or status of an application or the accuracy of the data therein, one need only look at the file online.

Out of an abundance of caution, Petitioners always are reminded that those registered to practice *and* all others who make representations before the Office must inquire into the underlying facts of representations made to the Office and support averments with the appropriate documentation–since all owe to the Office the continuing duty to disclose.[1]

STATUTES, REGULATIONS

Congress has authorized the Commissioner to "revive an application if the delay is shown to the satisfaction of the Commissioner to have been "unavoidable." 35 U.S.C. §133 (1994).

The regulations at 37 C.F.R. §1.137(a) and (b) set forth the requirements for a Petitioner to revive a previously unavoidably or unintentionally, respectively, abandoned application.[2],[3]

---

[1] See supplement of 17 June, 1999. The Patent and Trademark Office is relying on petitioner's duty of candor and good faith and accepting a statement made by Petitioner. See Changes to Patent Practice and Procedure, 62 Fed. Reg. at 53160 and 53178, 1203 Off. Gaz. Pat. Office at 88 and 103 (responses to comments 64 and 109)(applicant obligated under 37 C.F.R. §10.18 to inquire into the underlying facts and circumstances when providing statements to the Patent and Trademark Office). See specifically, the regulations at 37 C.F.R. §10.18.

[2] See: Changes to Patent Practice and Procedure; Final Rule Notice, 62 Fed. Reg. at 53158-59 (October 10, 1997), 1203 Off. Gaz. Pat. Office at 86-87 (October 21, 1997).

[3] The language of 35 U.S.C. §133 and 37 C.F.R. §1.137(a) is clear, unambiguous, and without qualification: the delay in tendering the reply to the outstanding Office action, as well as filing the first petition seeking revival, must have been unavoidable for the reply now to be accepted on petition. (Therefore, by example; an unavoidable delay in the payment of the Filing Fee might occur if a reply is shipped by the US Postal

CONCLUSION

The instant petition under 37 C.F.R. §1.137(b) is **granted**.

The instant application is released to IFW Repository in due course.

Petitioner may find it beneficial to view Private PAIR within a fortnight of the instant decision to ensure that the revival has been acknowledged if necessary by the Technology Center/AU in response to this decision. It is noted that all inquiries with regard to any failure of that change in status should be directed to the Technology Center where that change of status must be effected—that does not occur in the Office of Petitions.

While telephone inquiries regarding this decision may be directed to the undersigned at (571) 272-3214, it is noted that all practice before the Office is in writing (see: 37 C.F.R. §1.2[9]) and the proper authority for action on any matter in this regard are the statutes (35 U.S.C.), regulations (37 C.F.R.) and the commentary on policy (MPEP). Therefore, no telephone discussion may be controlling or considered authority for Petitioner's action(s).

John J. Gillon, Jr.
Senior Attorney
Office of Petitions

Service, but due to catastrophic accident, the delivery is not made.) Delays in responding properly raise the question whether delays are unavoidable. Where there is a question whether the delay was unavoidable, Petitioners must meet the burden of establishing that the delay was unavoidable within the meaning of 35 U.S.C. §133 and 37 C.F.R. §1.137(a) And the Petitioner must be diligent in attending to the matter. Failure to do so does not constitute the care required under Pratt, and so cannot satisfy the test for diligence and due care. (By contrast, unintentional delays are those that do not satisfy the very strict statutory and regulatory requirements of unavoidable delay, and also, by definition, are not intentional.))

[9] The regulations at 37 C.F.R. §1.2 provide:

§1.2 Business to be transacted in writing.

All business with the Patent and Trademark Office should be transacted in writing. The personal attendance of applicants or their attorneys or agents at the Patent and Trademark Office is unnecessary. The action of the Patent and Trademark Office will be based exclusively on the written record in the Office. No attention will be paid to any alleged oral promise, stipulation, or understanding in relation to which there is disagreement or doubt.

UNITED STATES PATENT AND TRADEMARK OFFICE

UNITED STATES DEPARTMENT OF COMMERCE
United States Patent and Trademark Office
Address: COMMISSIONER FOR PATENTS
P.O. Box 1450
Alexandria, Virginia 22313-1450
www.uspto.gov

APPL NO.	FILING OR 371(c) DATE	ART UNIT	FIL FEE REC'D	ATTY.DOCKET NO	TOT CLMS	IND CLMS
60/816,003	06/23/2006		200	KMUS127714		

CONFIRMATION NO. 8836

CORRECTED FILING RECEIPT

OC000000023651787

26389
CHRISTENSEN, O'CONNOR, JOHNSON, KINDNESS, PLLC
1420 FIFTH AVENUE
SUITE 2800
SEATTLE, WA 98101-2347

Date Mailed: 05/02/2007

Receipt is acknowledged of this provisional Patent Application. It will not be examined for patentability and will become abandoned not later than twelve months after its filing date. Be sure to provide the U.S. APPLICATION NUMBER, FILING DATE, NAME OF APPLICANT, and TITLE OF INVENTION when inquiring about this application. Fees transmitted by check or draft are subject to collection. Please verify the accuracy of the data presented on this receipt. **If an error is noted on this Filing Receipt, please mail to the Commissioner for Patents P.O. Box 1450 Alexandria Va 22313-1450. Please provide a copy of this Filing Receipt with the changes noted thereon. If you received a "Notice to File Missing Parts" for this application, please submit any corrections to this Filing Receipt with your reply to the Notice. When the USPTO processes the reply to the Notice, the USPTO will generate another Filing Receipt incorporating the requested corrections (if appropriate).**

Applicant(s)

John E. Svensson, Vashon, WA;

Power of Attorney: The patent practitioners associated with Customer Number **26389**.

If Required, Foreign Filing License Granted: 07/19/2006

The country code and number of your priority application, to be used for filing abroad under the Paris Convention, is US60/816,003

Projected Publication Date: None, application is not eligible for pre-grant publication

Non-Publication Request: Not applicable

Early-Publication Request: Not applicable

Title

Nordic ski boot support and attachment structure

PROTECTING YOUR INVENTION OUTSIDE THE UNITED STATES

Since the rights granted by a U.S. patent extend only throughout the territory of the United States and have no effect in a foreign country, an inventor who wishes patent protection in another country must apply for a patent in a specific country or in regional patent offices. Applicants may wish to consider the filing of an international application under the Patent Cooperation Treaty (PCT). An international (PCT) application generally has the same effect as a regular national patent application in each PCT-member country. The PCT process **simplifies** the filing of patent applications on the same invention in member countries, but **does not result** in a grant of "an international patent" and does not eliminate the need of applicants to file additional documents and fees in countries where patent protection is desired.

Almost every country has its own patent law, and a person desiring a patent in a particular country must make an application for patent in that country in accordance with its particular laws. Since the laws of many countries differ in various respects from the patent law of the United States, applicants are advised to seek guidance from specific foreign countries to ensure that patent rights are not lost prematurely.

Applicants also are advised that in the case of inventions made in the United States, the Director of the USPTO must issue a license before applicants can apply for a patent in a foreign country. The filing of a U.S. patent application serves as a request for a foreign filing license. The application's filing receipt contains further information and guidance as to the status of applicant's license for foreign filing.

Applicants may wish to consult the USPTO booklet, "General Information Concerning Patents" (specifically, the section entitled "Treaties and Foreign Patents") for more information on timeframes and deadlines for filing foreign patent applications. The guide is available either by contacting the USPTO Contact Center at 800-786-9199, or it can be viewed on the USPTO website at http://www.uspto.gov/web/offices/pac/doc/general/index.html.

For information on preventing theft of your intellectual property (patents, trademarks and copyrights), you may wish to consult the U.S. Government website, http://www.stopfakes.gov. Part of a Department of Commerce initiative, this website includes self-help "toolkits" giving innovators guidance on how to protect intellectual property in specific countries such as China, Korea and Mexico. For questions regarding patent enforcement issues, applicants may call the U.S. Government hotline at 1-866-999-HALT (1-866-999-4158).

LICENSE FOR FOREIGN FILING UNDER
Title 35, United States Code, Section 184
Title 37, Code of Federal Regulations, 5.11 & 5.15

GRANTED

The applicant has been granted a license under 35 U.S.C. 184, if the phrase "IF REQUIRED, FOREIGN FILING LICENSE GRANTED" followed by a date appears on this form. Such licenses are issued in all applications where the conditions for issuance of a license have been met, regardless of whether or not a license may be required as set forth in 37 CFR 5.15. The scope and limitations of this license are set forth in 37 CFR 5.15(a) unless an earlier license has been issued under 37 CFR 5.15(b). The license is subject to revocation upon written notification. The date indicated is the effective date of the license, unless an earlier license of similar scope has been granted under 37 CFR 5.13 or 5.14.

This license is to be retained by the licensee and may be used at any time on or after the effective date thereof unless it is revoked. This license is automatically transferred to any related applications(s) filed under 37 CFR 1.53(d). This license is not retroactive.

The grant of a license does not in any way lessen the responsibility of a licensee for the security of the subject matter as imposed by any Government contract or the provisions of existing laws relating to espionage and the national security or the export of technical data. Licensees should apprise themselves of current regulations especially with respect to certain countries, of other agencies, particularly the Office of Defense Trade Controls, Department of State (with respect to Arms, Munitions and Implements of War (22 CFR 121-128)); the Bureau of Industry and Security, Department of Commerce (15 CFR parts 730-774); the Office of Foreign Assets Control, Department of Treasury (31 CFR Parts 500+) and the Department of Energy.

NOT GRANTED

No license under 35 U.S.C. 184 has been granted at this time, if the phrase "IF REQUIRED, FOREIGN FILING LICENSE GRANTED" DOES NOT appear on this form. Applicant may still petition for a license under 37 CFR 5.12, if a license is desired before the expiration of 6 months from the filing date of the application. If 6 months has lapsed from the filing date of this application and the licensee has not received any indication of a secrecy order under 35 U.S.C. 181, the licensee may foreign file the application pursuant to 37 CFR 5.15(b).

UNITED STATES PATENT AND TRADEMARK OFFICE

UNITED STATES DEPARTMENT OF COMMERCE
United States Patent and Trademark Office
Address: COMMISSIONER FOR PATENTS
P.O. Box 1450
Alexandria, Virginia 22313-1450
www.uspto.gov

APPL NO.	FILING OR 371 (c) DATE	ART UNIT	FIL FEE REC'D	ATTY.DOCKET NO	DRAWINGS	TOT CLMS	IND CLMS
60/816,104	06/22/2006		200	ASMINT.094PRF	4		

CONFIRMATION NO. 8442

CORRECTED FILING RECEIPT

OC000000020028771

20995
KNOBBE MARTENS OLSON & BEAR LLP
2040 MAIN STREET
FOURTEENTH FLOOR
IRVINE, CA 92614

Date Mailed: 08/15/2006

Receipt is acknowledged of this provisional Patent Application. It will not be examined for patentability and will become abandoned not later than twelve months after its filing date. Be sure to provide the U.S. APPLICATION NUMBER, FILING DATE, NAME OF APPLICANT, and TITLE OF INVENTION when inquiring about this application. Fees transmitted by check or draft are subject to collection. Please verify the accuracy of the data presented on this receipt. **If an error is noted on this Filing Receipt, please mail to the Commissioner for Patents P.O. Box 1450 Alexandria Va 22313-1450. Please provide a copy of this Filing Receipt with the changes noted thereon. If you received a "Notice to File Missing Parts" for this application, please submit any corrections to this Filing Receipt with your reply to the Notice. When the USPTO processes the reply to the Notice, the USPTO will generate another Filing Receipt incorporating the requested corrections (if appropriate).**

Applicant(s)

Suvi P. Haukka, Helsinki, FINLAND;
Tanja Claasen, Amsterdam, NETHERLANDS;
Peter Zagwijn, Nijkerk, NETHERLANDS;

Power of Attorney: The patent practitioners associated with Customer Number **20995**.

If Required, Foreign Filing License Granted: 07/19/2006

The country code and number of your priority application, to be used for filing abroad under the Paris Convention, is US60/816,104

Projected Publication Date: None, application is not eligible for pre-grant publication

Non-Publication Request: Not applicable

Early-Publication Request: Not applicable

Title

Method to deposit complex nitride films

PROTECTING YOUR INVENTION OUTSIDE THE UNITED STATES

Since the rights granted by a U.S. patent extend only throughout the territory of the United States and have no effect in a foreign country, an inventor who wishes patent protection in another country must apply for a patent in a specific country or in regional patent offices. Applicants may wish to consider the filing of an international application under the Patent Cooperation Treaty (PCT). An international (PCT) application generally has the same effect as a regular national patent application in each PCT-member country. The PCT process **simplifies** the filing of patent applications on the same invention in member countries, but **does not result** in a grant of "an international patent" and does not eliminate the need of applicants to file additional documents and fees in countries where patent protection is desired.

Almost every country has its own patent law, and a person desiring a patent in a particular country must make an application for patent in that country in accordance with its particular laws. Since the laws of many countries differ in various respects from the patent law of the United States, applicants are advised to seek guidance from specific foreign countries to ensure that patent rights are not lost prematurely.

Applicants also are advised that in the case of inventions made in the United States, the Director of the USPTO must issue a license before applicants can apply for a patent in a foreign country. The filing of a U.S. patent application serves as a request for a foreign filing license. The application's filing receipt contains further information and guidance as to the status of applicant's license for foreign filing.

Applicants may wish to consult the USPTO booklet, "General Information Concerning Patents" (specifically, the section entitled "Treaties and Foreign Patents") for more information on timeframes and deadlines for filing foreign patent applications. The guide is available either by contacting the USPTO Contact Center at 800-786-9199, or it can be viewed on the USPTO website at http://www.uspto.gov/web/offices/pac/doc/general/index.html.

For information on preventing theft of your intellectual property (patents, trademarks and copyrights), you may wish to consult the U.S. Government website, http://www.stopfakes.gov. Part of a Department of Commerce initiative, this website includes self-help "toolkits" giving innovators guidance on how to protect intellectual property in specific countries such as China, Korea and Mexico. For questions regarding patent enforcement issues, applicants may call the U.S. Government hotline at 1-866-999-HALT (1-866-999-4158).

LICENSE FOR FOREIGN FILING UNDER
Title 35, United States Code, Section 184
Title 37, Code of Federal Regulations, 5.11 & 5.15

GRANTED

The applicant has been granted a license under 35 U.S.C. 184, if the phrase "IF REQUIRED, FOREIGN FILING LICENSE GRANTED" followed by a date appears on this form. Such licenses are issued in all applications where the conditions for issuance of a license have been met, regardless of whether or not a license may be required as set forth in 37 CFR 5.15. The scope and limitations of this license are set forth in 37 CFR 5.15(a) unless an earlier license has been issued under 37 CFR 5.15(b). The license is subject to revocation upon written notification. The date indicated is the effective date of the license, unless an earlier license of similar scope has been granted under 37 CFR 5.13 or 5.14.

This license is to be retained by the licensee and may be used at any time on or after the effective date thereof unless it is revoked. This license is automatically transferred to any related applications(s) filed under 37 CFR 1.53(d). This license is not retroactive.

The grant of a license does not in any way lessen the responsibility of a licensee for the security of the subject matter as imposed by any Government contract or the provisions of existing laws relating to espionage and the national security or the export of technical data. Licensees should apprise themselves of current regulations especially with respect to certain countries, of other agencies, particularly the Office of Defense Trade Controls, Department of State (with respect to Arms, Munitions and Implements of War (22 CFR 121-128)); the Bureau of Industry and Security, Department of Commerce (15 CFR parts 730-774); the Office of Foreign Assets Control, Department of Treasury (31 CFR Parts 500+) and the Department of Energy.

NOT GRANTED

No license under 35 U.S.C. 184 has been granted at this time, if the phrase "IF REQUIRED, FOREIGN FILING LICENSE GRANTED" DOES NOT appear on this form. Applicant may still petition for a license under 37 CFR 5.12, if a license is desired before the expiration of 6 months from the filing date of the application. If 6 months has lapsed from the filing date of this application and the licensee has not received any indication of a secrecy order under 35 U.S.C. 181, the licensee may foreign file the application pursuant to 37 CFR 5.15(b).

UNITED STATES PATENT AND TRADEMARK OFFICE

COMMISSIONER FOR PATENTS
UNITED STATES PATENT AND TRADEMARK OFFICE
P.O. BOX 1450
ALEXANDRIA, VA 22313-1450
WWW.USPTO.GOV

Paper No. None

BUSKOP LAW GROUP, P.C.
1776 YORKTOWN
SUITE 550
HOUSTON TX 77056

COPY MAILED
OCT 0 2 2006
OFFICE OF PETITIONS

In re Application of :
Charles A. Reese, Jr. et al. :
Application No. 60/816,161 : DECISION ON PETITION
Filed: June 23, 2006 :
Attorney Docket No.: :
1482.001 :
Title: REINFORCED STRUCTURE AND :
METHOD OF MAKING :

This is a decision on the petition filed July 25, 2006, requesting that the above-identified application, including Figures one through three, be accorded a filing date of June 23, 2006 as part of the original disclosure.

The application was deposited on June 23, 2006. However, on July 20, 2006, the Office of Initial Patent Examination (OIPE) mailed a "Notice of Incomplete Nonprovisional Application" (notice), stating that the application had not been accorded a filing date, and advising applicants that a filing date would be accorded upon the deposit of drawings.

In response, on July 25, 2006, applicants filed the present petition. The petition is further accompanied by a copy of three sheets of drawings containing Figures one through three, along with a copy of applicants' postcard receipt acknowledging receipt of "Drawings 3 pages [Figs: 1, 2 +3]" in the United States Patent and Trademark Office (Office) on June 23, 2006. Applicants request that Figures one through three be accorded a filing date of June 23, 2006.

No sheets of drawings have been located among the application papers in the electronic file. However, the evidence is

convincing that the application papers deposited on June 23, 2006 included three sheets of drawings, and each of these sheets was subsequently misplaced in the Office.

Therefore, the application, including Figures one through three, was complete on filing and entitled to a filing date of June 23, 2006 as part of the original disclosure.

Accordingly, the petition is **GRANTED**.

The notice mailed July 20, 2006 was sent in error, and is hereby **VACATED**. Therefore, no petition fee is necessary, and the petition fee will be refunded to Petitioner's Deposit Account in due course.

OIPE will be notified that the application should receive a filing date of June 23, 2006, using the original application papers filed on that date, as well as Figures one through three submitted on July 25, 2006, and it will be noted in Office records that these three sheets of drawings were present on filing.

The general phone number for the Office of Petitions which should be used for status requests is (571) 272-3282. Telephone inquiries regarding this decision should be directed to the undersigned at (571) 272-3225.

Paul Shanoski
Senior Attorney
Office of Petitions
United States Patent and Trademark Office

UNITED STATES PATENT AND TRADEMARK OFFICE

Commissioner for Patents
United States Patent and Trademark Office
P.O. Box 1450
Alexandria, VA22313-1450
www.uspto.gov

WEATHERLY KERVEN & SEIGEL LLC
115 PERIMETER CENTER PLACE
SUITE 1082
ATLANTA GA 30346-1245

COPY MAILED

MAR 14 2007

OFFICE OF PETITIONS

In re Application of
Eric R. Stephens
Application No. 60/816,400
Filed: June 26, 2006
Attorney Docket No. I004.P001.U1

ON PETITION

This is a decision on the "Petition to Accord Filing Date", filed February 14, 2007 which is treated under 37 CFR1.53.

While no notice was sent, petitioners argue that a review of the USPTO file record for the above-identified application indicates that drawings are not of record. Petitioners argue that five sheets of drawings were filed with the application on June 26, 2006, and thus that the application was complete on June 26, 2006. In furtherance of their claim that a complete application was filed on June 26, 2006, petitioner proffers a copy of a date stamped return receipt, which corroborates petitioners assertion that the application had been filed with drawings, and copies of the drawings previously filed with the application.

In view of the foregoing, the petition is **GRANTED**.

Given the basis for granting the petition, no petition fees are due and none have been charged.

This application is being forwarded to the Office of Initial Patent Examination (OIPE) for further processing with a **filing date of June 26, 2006**, using the application papers received in the Office on that date and the application papers, which includes the five sheets of drawings filed with the petition. As well, a Corrected Filing Receipt will be sent with an indication that five sheets of drawings were present on filing. Applicant will receive appropriate notifications regarding the fees owed, if any, and other information in due course from OIPE.

Telephone inquiries regarding this decision should be directed to the undersigned Petitions Attorney at (571) 272-3212.

Patricia Faison-Ball

Patricia Faison-Ball
Senior Petitions Attorney
Office of Petitions

UNITED STATES PATENT AND TRADEMARK OFFICE

Commissioner for Patents
United States Patent and Trademark Office
P.O. Box 1450
Alexandria, VA 22313-1450
www.uspto.gov

MORGAN, LEWIS & BOCKIUS, LLP (SF)
2 PALO ALTO SQUARE
3000 El Camino Real, Suite 700
PALO ALTO, CA 94306

COPY MAILED

MAR 12 2008

OFFICE OF PETITIONS

In re Application of	:	
Alan Gin, et. al.	:	
Application No. 60/816,584	:	DECISION GRANTING
Filed: June 25, 2006	:	PETITION
Attorney Docket No. 10455.0005/US	:	

This is a decision on the petition under 37 CFR 1.10(c) filed on May 14, 2007, requesting that the above-identified application be accorded a filing date of June 25, 2006, rather than the presently accorded date of June 26, 2006.

Petitioner alleges that the application was deposited in Express Mail Service on June 25, 2006. In support, the petition is accompanied by a copy of Express Mail receipt No. EV820694555US, which contains a "date-in" of June 25, 2006. It is noted that the Application Transmittal Letter contained the same Express Mail label number.

The Office considers the date the paper or fee is shown to have been deposited as "Express Mail" to be the "date-in" on the Express Mail label, MPEP 513. The evidence is convincing that the application was deposited as "Express Mail" with the U. S. Postal Service on June 25, 2006.

In view of the above, the petition is **GRANTED.**

This application file is being forwarded to the Office of Patent Application Processing (OPAP) for **correction of the filing date to June 25, 2006 and for issuance of a corrected filing receipt.**

Telephone inquiries relating to this decision should be directed to Andrea Smith at (571) 272-3226. Telephone inquiries related to OIPE processing should be directed to their hotline at (571) 272-4000.

Andrea Smith
Petitions Examiner
Office of Petitions

UNITED STATES PATENT AND TRADEMARK OFFICE

Commissioner for Patents
United States Patent and Trademark Office
P.O. Box 1450
Alexandria, VA 22313-1450
www.uspto.gov

ABELMAN, FRAYNE & SCHWAB
666 THIRD AVENUE, 10TH FLOOR
NEW YORK, NY 10017

COPY MAILED

JUL 18 2007

OFFICE OF PETITIONS

In re Application of :
Lior Frenkel, et al :
Application No. 60/816,924 : DECISION GRANTING PETITION
Filed: June 26, 2006 :
Attorney Docket No. 207.671 :

This is a decision on the petition filed December 28, 2006, requesting that the above-identified application be accorded a filing date of June 26, 2006, instead of the presently accorded date of June 27, 2006

Petitioner requests the earlier filing date on the basis that the application was purportedly deposited with the U. S. Postal Service (USPS) as Express Mail on June 26, 2006. In support, petitioner provides a copy of the Express Mail label, No. ER059676927US. The same Express Mail tracking number appears on the original transmittal letter found in the file.

It is noted that while the "date-in" is not entered on the copy of the Express Mail mailing label, the label includes a USPS receipt date stamp of "JUN 26 2006." Accordingly, the evidence is convincing that the application was deposited as "Express Mail" with the U.S. Postal Service on June 26, 2006.

The petition is **GRANTED**.

No petition fee was charged to counsel's deposit account, nor is one due.

The application is being referred to Office of Initial Patent Examination (OIPE) for correction of the filing date to **June 26, 2006**, and issuance of a Corrected Official Filing Receipt.

Telephone inquires related to this decision should be directed to the undersigned at (571) 272-3204. Telephone inquiries related to OIPE processing should be directed to their hotline at (571) 272-4000.

Sherry D. Brinkley
Petitions Examiner
Office of Petitions

UNITED STATES PATENT AND TRADEMARK OFFICE

Commissioner for Patents
United States Patent and Trademark Office
P.O. Box 1450
Alexandria, VA 22313-1450
www.uspto.gov

COPY MAILED
NOV 14 2006
OFFICE OF PETITIONS

JOHN R WETHERELL PHD
PILLSBURY WINTHROP SHAW PITTMAN LLP
SUITE 200
11682 EL CAMINO REAL
SAN DIEGO CA 92130-2092

In re Application of	:	
Lemire, et al.	:	
Application No. 60/817,528	:	DECISION DISMISSING PETITION
Filed: June 28, 2006	:	
Attorney Docket No. 606253000700	:	

This is a decision on the petition filed September 25, 2006, to accord the above-identified application a filing date of June 28, 2006, with Figure 3 of the drawings as part of the original disclosure.

Application papers in the above-identified application were filed on June 28, 2006. However, on July 20, 2006 the Office of Initial Patent Examination mailed applicant a "Notice of Omitted Item(s) in a Provisional Application." Applicant was notified that the application papers had been accorded a filing date; however, Figure 3 of the drawings appeared to have been omitted. The Notice set a two month extendable period for reply.

In response, on September 25, 2006, applicants filed the present petition (made timely by including a Certificate of Mailing dated September 20, 2006). Petitioner has submitted Figure 3 and requested that the application, including Figure 3, be accorded a the filing date of June 28, 2006. However, petitioner has submitted no proof (e.g. a USPTO date stamped postcard receipt) to establish that Figure 3 was present on filing.

The PTO file is the official record of papers originally filed in this application. An applicant alleging that a paper was filed in the PTO and later misplaced has the burden of proving the allegation by a preponderance of the evidence. A review of the official file reveals that Figure 3 was not filed on June 28, 2006, since that Figure is not present in the file.

In view thereof, the petition is **DISMISSED**.

The drawing sheet containing Figure 3 will remain in the file, but will not be considered to have been filed on June 28, 2006. If applicant has proof that Figure 3 was included with the application papers filed on June 28, 2006, applicant may include such with a request for reconsideration of this decision. No fee is required for a request for reconsideration.

The matter is being returned to the Office of Initial Patent Examination for pre-examination processing, using the application papers filed on June 28, 2006.

Telephone inquiries related to this decision should be directed to the undersigned at (571)272-3207.

Cliff Congo
Petitions Attorney
Office of Petitions

UNITED STATES PATENT AND TRADEMARK OFFICE

Commissioner for Patents
United States Patent and Trademark Office
P.O. Box 1450
Alexandria, VA 22313-1450
www.uspto.gov

CHARLES A. WILKINSON, ESQ.
68 EAST BROAD STREET
P.O. BOX 1426
BETHLEHEM, PA 18016-1426

COPY MAILED

MAY 2 0 2008

OFFICE OF PETITIONS

In re Application of	:	
William Burns Moore, et. al.	:	
Application No. 60/818,384	:	ON PETITION
Filed: July 5, 2006	:	
Attorney Docket No. 042806-01	:	

This is a decision on the petition under 37 CFR 1.137(b), filed on June 1, 2007, to revive the above-identified application.

The application became abandoned for failure to reply in a timely manner to the Notice to File Missing Parts of Provisional Application mailed July 24, 2006. A Notice of Abandonment was mailed on March 30, 2007.

It is not apparent whether the person signing the instant petition was ever given a power of attorney or authorization of agent to prosecute the above-identified application. However, in accordance with 37 CFR 1.34(a), the signature appearing on the petition shall constitute a representation to the United States Patent and Trademark Office that he is authorized to represent the particular party in whose behalf he acts.

The petition satisfies the requirements of 37 CFR 1.137(b), in that, petitioner has supplied (1) the reply in the form of $20 to complete the filing fee and $25 for the surcharge; (2) the petition fee of $750; and (3) a proper statement of unintentional delay. Therefore, the petition is **GRANTED**.

This application file is being referred to the Office of Patent Application Processing.

Telephone inquiries concerning this decision should be directed to the undersigned at (571) 272-3226.

Andrea Smith
Petitions Examiner
Office of Petitions

UNITED STATES PATENT AND TRADEMARK OFFICE

Commissioner for Patents
United States Patent and Trademark Office
P.O. Box 1450
Alexandria, VA 22313-1450
www.uspto.gov

JAMES MARC LEAS
37 BUTLER DRIVE
S. BURLINGTON VT 05403

COPY MAILED

SEP 29 2008

OFFICE OF PETITIONS

In re Application of

Arms, et al.

Application No. 60/818,567

Filed: July 5, 2006

Attorney Docket No. 115-039

DECISION ON PETITION

This is a decision on the petition under 37 CFR §1.137(b), May 28, 2008, to revive the above-identified application.

The petition is **dismissed**.

Any request for reconsideration of this decision must be submitted within TWO (2) MONTHS from the mail date of this decision. Extensions of time under 37 CFR 1.136(a) are permitted. The reconsideration request should include a cover letter entitled "Renewed Petition" under 37 CFR 1.137(b)."

This application became abandoned for failure to respond in a timely manner to the Notice to File Missing Parts of Provisional Application mailed July 28, 2006. The notice set a shortened period for reply of two months from its mailing date. Extensions of time were available pursuant to 37 CFR 1.136(a). No response was received within the allowable period and the application became abandoned on September 29, 2006. A Notice of Abandonment was mailed on May 23, 2008.

Effective December 1, 1997, the provisions of 37 CFR 1.137(b) now provide that where the delay in reply was unintentional, a petition may be filed to revive an abandoned application or a lapsed patent pursuant to 37 CFR 1.137(b). A grantable petition pursuant to 37 CFR 1.137(b) must be accompanied by:

(1) the required reply, unless previously filed. In a non-provisional application abandoned for failure to prosecute, the required reply may be met by the filing of a continuing application. In an application or patent, abandoned or lapsed for failure to pay the issue fee, or any portion thereof, the required reply must be the payment of the issue fee or any outstanding balance thereof.

(2) the petition fee as set forth in 37 CFR 1.17(m);

(3) a statement that the entire delay in filing the required reply from the due date for the reply until the filing of a grantable petition pursuant to 37 CFR 1.137(b) was unintentional. The Commissioner may require additional information where there is a question whether the delay was unintentional; and

(4) any terminal disclaimer (and fee set forth in 37 CFR 1.20(d)) required pursuant to 37 CFR 1.137(c).

The instant petition does not satisfy the requirements of items (2), and (3) above.

As to item (2), the fee for the instant petition is $770.00, but the petition was only accompanied by a fee of $750.00 . The renewed petition must be accompanied by the remaining amount due for the petition fee--$20.00.

As to item (3), the petition did not include the required statement that "the entire delay in filing the required reply form the due date for the reply until the filing of a grantable petition pursuant to 37 CFR 1.137(b) was unintentional." Any renewed petition must include the required statement.

It is noted that the instant provisional application expired by operation of law on July 6, 2007.

Further correspondence with respect to this matter should be addressed as follows:

By mail: Mail Stop Petitions
Commissioner for Patents
United States Patent and Trademark Office
Box 1450
Alexandria, VA 22313-1450

By facsimile: (571) 273-8300
Attn: Office of Petitions

Telephone inquiries concerning this matter may be directed to the undersigned at (571) 272-3222.

Kenya A. McLaughlin
Petitions Attorney
Office of Petitions

UNITED STATES PATENT AND TRADEMARK OFFICE

Commissioner for Patents
United States Patent and Trademark Office
P.O. Box 1450
Alexandria, VA 22313-1450
www.uspto.gov

JAMES MARC LEAS
37 BUTLER DRIVE
S. BURLINGTON VT 05403

COPY MAILED
OCT 27 2008

In re Application of

Arms, et al.

Application No. 60/818,567

Filed: July 5, 2006

Attorney Docket No. 115-039

: DECISION ON PETITION

This is a decision on the renewed petition under 37 CFR §1.137(b), October 6, 2008, to revive the above-identified application.

The renewed petition is **dismissed**.

Any request for reconsideration of this decision must be submitted within TWO (2) MONTHS from the mail date of this decision. Extensions of time under 37 CFR 1.136(a) are permitted. The reconsideration request should include a cover letter entitled "Renewed Petition" under 37 CFR 1.137(b)."

This application became abandoned for failure to respond in a timely manner to the Notice to File Missing Parts of Provisional Application mailed July 28, 2006. The notice set a shortened period for reply of two months from its mailing date. Extensions of time were available pursuant to 37 CFR 1.136(a). No response was received within the allowable period and the application became abandoned on September 29, 2006. A Notice of Abandonment was mailed on May 23, 2008.

Effective December 1, 1997, the provisions of 37 CFR 1.137(b) now provide that where the delay in reply was unintentional, a petition may be filed to revive an abandoned application or a lapsed patent pursuant to 37 CFR 1.137(b). A grantable petition pursuant to 37 CFR 1.137(b) must be accompanied by:

(1) the required reply, unless previously filed. In a non-provisional application abandoned for failure to prosecute, the required reply may be met by the filing of a continuing application. In an application or patent, abandoned or lapsed for failure to pay the issue fee, or any portion thereof, the required reply must be the payment of the issue fee or any outstanding balance thereof.

(2) the petition fee as set forth in 37 CFR 1.17(m);

(3) a statement that the entire delay in filing the required reply from the due date for the reply until the filing of a grantable petition pursuant to 37 CFR 1.137(b) was unintentional. The Commissioner may require additional information where there is a question whether the delay was unintentional; and

(4) any terminal disclaimer (and fee set forth in 37 CFR 1.20(d)) required pursuant to 37 CFR 1.137(c).

The instant petition does not satisfy the requirements of item (2) above.

As to item (2), effective October 2, 2008, the fee for the instant petition is $810.00. The renewed petition must be accompanied by an additional $40.00 in order to be considered grantable.

It is noted that the instant provisional application expired by operation of law on July 6, 2007.

Further correspondence with respect to this matter should be addressed as follows:

By mail: Mail Stop Petitions
Commissioner for Patents
United States Patent and Trademark Office
Box 1450
Alexandria, VA 22313-1450

By facsimile: (571) 273-8300
Attn: Office of Petitions

Telephone inquiries concerning this matter may be directed to the undersigned at (571) 272-3222.

Kenya A. McLaughlin
Petitions Attorney
Office of Petitions

UNITED STATES PATENT AND TRADEMARK OFFICE

Commissioner for Patents
United States Patent and Trademark Office
P.O. Box 1450
Alexandria, VA 22313-1450
www.uspto.gov

JAMES MARC LEAS
37 BUTLER DRIVE
S. BURLINGTON, VT 05403

RECEIVED
DEC 22 2008
OFFICE OF PETITIONS

In re Application of

Arms, et al.

Application No. 60/818,567

Filed: July 5, 2006

Attorney Docket No. 115-039

DECISION ON PETITION

This is a decision on the renewed petition under 37 CFR §1.137(b), November 10, 2008, to revive the above-identified application.

The petition is **granted**.

This application became abandoned for failure to respond in a timely manner to the Notice to File Missing Parts of Provisional Application mailed July 28, 2006. The notice set a shortened period for reply of two months from its mailing date. Extensions of time were available pursuant to 37 CFR 1.136(a). No response was received within the allowable period and the application became abandoned on September 29, 2006. A Notice of Abandonment was mailed May 23, 2008.

The indication, filed May 28, 2008, that the CD-ROM is not necessary for the application is noted.

A provisional application may be revived so as to be pending for a period no longer than twelve months from its filing date. See 35 USC 11(b)(5). This application is now expired as a matter of law.

Telephone inquiries concerning this decision may be directed to the undersigned at (571) 272-3222.

Kenya A. McLaughlin
Petitions Attorney
Office of Petitions

UNITED STATES PATENT AND TRADEMARK OFFICE

Commissioner for Patents
United States Patent and Trademark Office
P.O. Box 1450
Alexandria, VA 22313-1450
www.uspto.gov
DIW Nov-06

SCULLY SCOTT MURPHY & PRESSER, PC
400 GARDEN CITY PLAZA
SUITE 300
GARDEN CITY NY 11530

COPY MAILED
NOV 28 2006
OFFICE OF PETITIONS

In re Application of	:	
Crook et al.	:	
Application No. 60/818,780	:	ON PETITION
Filed: 6 July, 2006	:	
Atty Docket No. P20035	:	

This is a decision on the petition under 37 CFR 1.53(e), filed on 25 September, 2006, requesting that the above-identified provisional application be accorded a filing date of 6 July, 2006.

The petition is **GRANTED**.

The application was filed on 6 July, 2006, without drawings. Accordingly, on 25 July, 2006, Initial Patent Examination Division mailed a Notice of Incomplete Provisional Application stating that the application had been deposited without drawings.

On 25 September, 2006, the present petition was filed. Petitioners argue that drawings are not necessary for an understanding of the subject matter sought to be patented, and so request that the application be accorded a filing date of 6 July, 2006, without drawings.

As stated in MPEP 601.01(f), it is the practice of the PTO to treat a provisional application that contains at least some disclosure of a process or method as an application for which a drawing is not necessary for an understanding of the invention under 35 U.S.C. 113 (first sentence).

MPEP 601.01(f) also states that:

> A nonprovisional application having at least one claim, or a provisional application having at least some disclosure, directed to the subject matter discussed above for which a drawing is usually not considered essential for a filing

date, describing drawing figure(s) in the specification, but filed without drawings will be treated as an application filed without all of the drawing figures referred to in the specification as discussed in MPEP 601.01(g), so long as the application contains something that can be construed as a written description and the names of all the inventors.

As a review of the official file reveals that the application includes at least one method claim. Therefore, this application contains disclosure relating to a process or method.

In view of the above, the "Notice" mailed 25 July, 2006, was mailed in error and is hereby withdrawn.

The application will be processed using the application papers present on filing on 6 July, 2006.

The application is accorded a filing date of 6 July, 2006, without drawings as a part of the original disclosure. The petition fee paid of $400.00 will be credited to counsel's deposit account.

The application is being returned to the Office of Initial Patent Examination for further processing with a filing date of 6 July, 2006, using only the application papers filed on that date.

Telephone inquiries specific to this matter should be directed to the undersigned at 571 272-3231.

D Wood

Douglas I. Wood
Senior Petitions Attorney
Office of Petitions

UNITED STATES PATENT AND TRADEMARK OFFICE

Commissioner for Patents
United States Patent and Trademark Office
P.O. Box 1450
Alexandria, VA 22313-1450
www.uspto.gov

WENDEROTH, LIND & PONACK, L.L.P.
2033 K STREET N. W.
SUITE 800
WASHINGTON DC 20006-1021

COPY MAILED

SEP 25 2007

OFFICE OF PETITIONS

In re Application of :
Leo TERNORUTSKY et al. :
Application No. 60/818,969 :
Filed: July 7, 2006 :
Attorney Docket No. PR06 1104A :

DECISION ON PETITION

This is a decision on the petition under 37 CFR 1.137(b), filed July 25, 2007, to revive the above-identified application.

The petition is **DISMISSED**.

Any request for reconsideration of this decision must be submitted within TWO (2) MONTHS from the mail date of this decision. Extensions of time under 37 CFR 1.136(a) are permitted. The reconsideration request should include a cover letter entitled "Renewed Petition under 37 CFR 1.137(b)." This is **not** a final agency action within the meaning of 5 U.S.C. § 704.

The above-identified application became abandoned for failure to reply to the Notice to File Missing Parts of a Nonprovisional Application ("Notice"), mailed July 26, 2006, which set a shortened statutory period for reply of two (2) months. No extensions of time under the provisions of 37 CFR 1.136(a) were obtained. Accordingly, the above-identified application became abandoned on September 27, 2006.

A grantable petition under 37 CFR 1.137(b) must be accompanied by: (1) the required reply, unless previously filed; (2) the petition fee as set forth in 37 CFR 1.17(m); (3) a statement that the entire delay in filing the required reply from the due date for the reply until the filing of a grantable petition pursuant to 37 CFR 1.137(b) was unintentional; and (4) any terminal disclaimer (and fee as set forth in 37 CFR 1.20(d)) required by 37 CFR 1.137(d). Where there is a question as to whether either the abandonment or the delay in filing a petition under 37 CFR 1.137 was unintentional, the Commissioner may require additional information. See MPEP 711.03(c)(III)(C) and (D). The instant petition lacks item(s) (1). The petitioner has not submitted the required reply. The petitioner has not submitted an application data sheet pursuant to 37 CFR 1.76 as required by the Notice.

Further correspondence with respect to this matter should be addressed as follows:

By Mail: Mail Stop PETITION
Commissioner for Patents
P. O. Box 1450
Alexandria, VA 22313-1450

By hand: U. S. Patent and Trademark Office
Customer Service Window, Mail Stop Petitions
Randolph Building
401 Dulany Street
Alexandria, VA 22314

The centralized facsimile number is **(571) 273-8300.**

Telephone inquiries concerning this decision should be directed to Brian Sines at (571) 272-6051 or in his absence, the undersigned at (571) 272-7099.

David Bucci
Petitions Examiner
Office of Petitions

UNITED STATES PATENT AND TRADEMARK OFFICE

Commissioner for Patents
United States Patent and Trademark Office
P.O. Box 1450
Alexandria, VA 22313-1450
www.uspto.gov

WENDEROTH, LIND & PONACK, L.L.P.
2033 K STREET N. W.
SUITE 800
WASHINGTON DC 20006-1021

COPY MAILED

JAN 29 2008

OFFICE OF PETITIONS

ON PETITION

In re Application of :
Leo TERNORUTSKY et al :
Application No. 60/818,969 :
Filed: July 7, 2006 :
Attorney Docket No. PR06 1104A :

This is a decision on the renewed petition under 37 CFR 1.137(b), filed October 1, 2007, to revive the above-identified application.

The petition is **GRANTED**.

The above-identified application became abandoned for failure to reply in a timely manner to the notice to file missing parts of provisional application mailed July 26, 2006, which set a shortened statutory period for reply of two (2) months. No extension of time under the provisions of 37 CFR 1.136(a) was obtained. Accordingly, the above-identified application became abandoned on September 27, 2006.

The petition satisfies the conditions for revival pursuant to the provisions of 37 CFR 1.137(b) in that (1) the reply in the form of application data sheet pursuant to 37 CFR 1.76 and surcharge; (2) the petition fee of $1500; and (3) the required statement of unintentional delay have been received. Accordingly, the reply to the notice to file missing parts of provisional application of July 26, 2006 is accepted as having been unintentionally delayed.

Telephone inquiries concerning this decision should be directed to Quyen Leung at (571) 272-6051 or in her absence, the undersigned at (571) 272-7099.

The application file is being referred to the Office of Initial Patent Examination (OIPE) for appropriate processing of the application data sheet.

David A. Bucci
Petitions Examiner
Office of Petitions

UNITED STATES PATENT AND TRADEMARK OFFICE

Commissioner for Patents
United States Patent and Trademark Office
P.O. Box 1450
Alexandria, VA 22313-1450
www.uspto.gov

PERKINS COIE LLP
PO BOX 2168
MENLO PARK CA 94026

COPY MAILED
OCT 0 2 2006
OFFICE OF PETITIONS

In re Application of	:	
Christopher G. Atwood	:	
Application No. 60/819,025	:	DECISION ON PETITION
Filed: July 7, 2006	:	
Attorney Docket No. 38547-8014	:	

This is a decision on the "Petition in Response to Notice of Omitted Item(s) in a Provisional Application", filed September 1, 2006, to accord the application a filing date of July 7, 2006 with Figure 19 of the drawings as part of the original disclosure.

The petition is **GRANTED** to the extent indicated herein.

Application papers in the above-identified application were filed on July 7, 2006. However, on July 26, 2006, the Initial Patent Examination Division mailed Applicant a "Notice of Omitted Item(s) in a Provisional Application." Applicant was notified that the application papers had been accorded a filing date; however, Figure 19 of the drawings appeared to have been omitted.

On petition, applicant has not supplied a copy of a postcard receipt evidencing receipt of Figure 19. Accordingly, the drawing sheet of Figure 19 supplied on petition will remain in the file, but will not be considered to have been filed on July 7, 2006. However, page 25 of the specification has a drawing labeled Figure 19 interspersed with the text.

As the Notice was correct in stating that Figure 19 appeared to have been omitted (as no drawing sheet containing Figure 19 is found in the file), the petition fee will not be refunded.

The application is being forwarded to the Office of Initial Patent Examination (OIPE) for further processing with a filing date of July 7, 2006, using the application papers received in the Office on that date and for indication that 10 sheets of drawings were received on filing.

Telephone inquiries related to this decision should be directed to the undersigned at 571-272-3207.

Cliff Congo
Petitions Attorney
Office of Petitions

UNITED STATES PATENT AND TRADEMARK OFFICE

UNITED STATES DEPARTMENT OF COMMERCE
United States Patent and Trademark Office
Address: COMMISSIONER FOR PATENTS
P.O. Box 1450
Alexandria, Virginia 22313-1450
www.uspto.gov

APPL NO.	FILING OR 371 (c) DATE	ART UNIT	FIL FEE REC'D	ATTY.DOCKET NO	DRAWINGS	TOT CLMS	IND CLMS
60/819,086	07/07/2006		500	01997.060000.PV	19		

CONFIRMATION NO. 5521

UPDATED FILING RECEIPT

OC000000020663975

45743
FITZPATRICK CELLA (WYETH)
30 ROCKEFELLER PLAZA
NEW YORK, NY 10112-3800

Date Mailed: 10/02/2006

Receipt is acknowledged of this provisional Patent Application. It will not be examined for patentability and will become abandoned not later than twelve months after its filing date. Be sure to provide the U.S. APPLICATION NUMBER, FILING DATE, NAME OF APPLICANT, and TITLE OF INVENTION when inquiring about this application. Fees transmitted by check or draft are subject to collection. Please verify the accuracy of the data presented on this receipt. **If an error is noted on this Filing Receipt, please mail to the Commissioner for Patents P.O. Box 1450 Alexandria Va 22313-1450. Please provide a copy of this Filing Receipt with the changes noted thereon. If you received a "Notice to File Missing Parts" for this application, please submit any corrections to this Filing Receipt with your reply to the Notice. When the USPTO processes the reply to the Notice, the USPTO will generate another Filing Receipt incorporating the requested corrections (if appropriate).**

Applicant(s)

Andrew Wood, Newtown, PA;
Alan Katz, Lawrenceville, NJ;
Ying Gao, East Brunswick, NJ;
Brian G. Bates, Chelmsford, MA;
Patrick Doherty, Twickenham, UNITED KINGDOM;
Gareth Williams, Iiford, UNITED KINGDOM;

Power of Attorney:
Joseph Pieroni--53469

If Required, Foreign Filing License Granted: 07/25/2006

The country code and number of your priority application, to be used for filing abroad under the Paris Convention, is US60/819,086

Projected Publication Date: None, application is not eligible for pre-grant publication

Non-Publication Request: Not applicable

Early-Publication Request: Not applicable

Title

Nogo receptor functional motifs, peptide mimetics and mutated functional motifs related thereto,

and methods of using the same

PROTECTING YOUR INVENTION OUTSIDE THE UNITED STATES

Since the rights granted by a U.S. patent extend only throughout the territory of the United States and have no effect in a foreign country, an inventor who wishes patent protection in another country must apply for a patent in a specific country or in regional patent offices. Applicants may wish to consider the filing of an international application under the Patent Cooperation Treaty (PCT). An international (PCT) application generally has the same effect as a regular national patent application in each PCT-member country. The PCT process **simplifies** the filing of patent applications on the same invention in member countries, but **does not result** in a grant of "an international patent" and does not eliminate the need of applicants to file additional documents and fees in countries where patent protection is desired.

Almost every country has its own patent law, and a person desiring a patent in a particular country must make an application for patent in that country in accordance with its particular laws. Since the laws of many countries differ in various respects from the patent law of the United States, applicants are advised to seek guidance from specific foreign countries to ensure that patent rights are not lost prematurely.

Applicants also are advised that in the case of inventions made in the United States, the Director of the USPTO must issue a license before applicants can apply for a patent in a foreign country. The filing of a U.S. patent application serves as a request for a foreign filing license. The application's filing receipt contains further information and guidance as to the status of applicant's license for foreign filing.

Applicants may wish to consult the USPTO booklet, "General Information Concerning Patents" (specifically, the section entitled "Treaties and Foreign Patents") for more information on timeframes and deadlines for filing foreign patent applications. The guide is available either by contacting the USPTO Contact Center at 800-786-9199, or it can be viewed on the USPTO website at http://www.uspto.gov/web/offices/pac/doc/general/index.html.

For information on preventing theft of your intellectual property (patents, trademarks and copyrights), you may wish to consult the U.S. Government website, http://www.stopfakes.gov. Part of a Department of Commerce initiative, this website includes self-help "toolkits" giving innovators guidance on how to protect intellectual property in specific countries such as China, Korea and Mexico. For questions regarding patent enforcement issues, applicants may call the U.S. Government hotline at 1-866-999-HALT (1-866-999-4158).

LICENSE FOR FOREIGN FILING UNDER
Title 35, United States Code, Section 184
Title 37, Code of Federal Regulations, 5.11 & 5.15

GRANTED

The applicant has been granted a license under 35 U.S.C. 184, if the phrase "IF REQUIRED, FOREIGN FILING LICENSE GRANTED" followed by a date appears on this form. Such licenses are issued in all applications where the conditions for issuance of a license have been met, regardless of whether or not a license may be required as set forth in 37 CFR 5.15. The scope and limitations of this license are set forth in 37 CFR 5.15(a) unless an earlier license has been issued under 37 CFR 5.15(b). The license is subject to revocation upon written notification. The date indicated is the effective date of the license, unless an earlier license of similar scope has been granted under 37 CFR 5.13 or 5.14.

This license is to be retained by the licensee and may be used at any time on or after the effective date thereof unless it is revoked. This license is automatically transferred to any related applications(s) filed under 37 CFR 1.53(d). This license is not retroactive.

The grant of a license does not in any way lessen the responsibility of a licensee for the security of the subject matter as imposed by any Government contract or the provisions of existing laws relating to espionage and the

national security or the export of technical data. Licensees should apprise themselves of current regulations especially with respect to certain countries, of other agencies, particularly the Office of Defense Trade Controls, Department of State (with respect to Arms, Munitions and Implements of War (22 CFR 121-128)); the Bureau of Industry and Security, Department of Commerce (15 CFR parts 730-774); the Office of Foreign Assets Control, Department of Treasury (31 CFR Parts 500+) and the Department of Energy.

NOT GRANTED

No license under 35 U.S.C. 184 has been granted at this time, if the phrase "IF REQUIRED, FOREIGN FILING LICENSE GRANTED" DOES NOT appear on this form. Applicant may still petition for a license under 37 CFR 5.12, if a license is desired before the expiration of 6 months from the filing date of the application. If 6 months has lapsed from the filing date of this application and the licensee has not received any indication of a secrecy order under 35 U.S.C. 181, the licensee may foreign file the application pursuant to 37 CFR 5.15(b).

UNITED STATES PATENT AND TRADEMARK OFFICE

UNITED STATES DEPARTMENT OF COMMERCE
United States Patent and Trademark Office
Address: COMMISSIONER FOR PATENTS
P.O. Box 1450
Alexandria, Virginia 22313-1450
www.uspto.gov

APPL NO.	FILING OR 371 (c) DATE	ART UNIT	FIL FEE REC'D	ATTY.DOCKET NO	DRAWINGS	TOT CLMS	IND CLMS
60/819,118	07/06/2006		200	6212P010Z	4		

CONFIRMATION NO. 4793

CORRECTED FILING RECEIPT

OC000000020175854

08791
BLAKELY SOKOLOFF TAYLOR & ZAFMAN
12400 WILSHIRE BOULEVARD
SEVENTH FLOOR
LOS ANGELES, CA 90025-1030

Date Mailed: 08/24/2006

Receipt is acknowledged of this provisional Patent Application. It will not be examined for patentability and will become abandoned not later than twelve months after its filing date. Be sure to provide the U.S. APPLICATION NUMBER, FILING DATE, NAME OF APPLICANT, and TITLE OF INVENTION when inquiring about this application. Fees transmitted by check or draft are subject to collection. Please verify the accuracy of the data presented on this receipt. **If an error is noted on this Filing Receipt, please mail to the Commissioner for Patents P.O. Box 1450 Alexandria Va 22313-1450. Please provide a copy of this Filing Receipt with the changes noted thereon. If you received a "Notice to File Missing Parts" for this application, please submit any corrections to this Filing Receipt with your reply to the Notice. When the USPTO processes the reply to the Notice, the USPTO will generate another Filing Receipt incorporating the requested corrections (if appropriate).**

Applicant(s)

Ruey-Kang Chang, Culver City, CA;

Power of Attorney:

William Babbitt--39591

If Required, Foreign Filing License Granted: 07/24/2006

The country code and number of your priority application, to be used for filing abroad under the Paris Convention, is US60/819,118

Projected Publication Date: None, application is not eligible for pre-grant publication

Non-Publication Request: Not applicable

Early-Publication Request: Not applicable

Title

Device and method for screening congenital heart disease

PROTECTING YOUR INVENTION OUTSIDE THE UNITED STATES

Since the rights granted by a U.S. patent extend only throughout the territory of the United States and have no effect in a foreign country, an inventor who wishes patent protection in another country must apply for a patent in a specific country or in regional patent offices. Applicants may wish to consider the filing of an international application under the Patent Cooperation Treaty (PCT). An international (PCT) application generally has the same effect as a regular national patent application in each PCT-member country. The PCT process **simplifies** the filing of patent applications on the same invention in member countries, but **does not result** in a grant of "an international patent" and does not eliminate the need of applicants to file additional documents and fees in countries where patent protection is desired.

Almost every country has its own patent law, and a person desiring a patent in a particular country must make an application for patent in that country in accordance with its particular laws. Since the laws of many countries differ in various respects from the patent law of the United States, applicants are advised to seek guidance from specific foreign countries to ensure that patent rights are not lost prematurely.

Applicants also are advised that in the case of inventions made in the United States, the Director of the USPTO must issue a license before applicants can apply for a patent in a foreign country. The filing of a U.S. patent application serves as a request for a foreign filing license. The application's filing receipt contains further information and guidance as to the status of applicant's license for foreign filing.

Applicants may wish to consult the USPTO booklet, "General Information Concerning Patents" (specifically, the section entitled "Treaties and Foreign Patents") for more information on timeframes and deadlines for filing foreign patent applications. The guide is available either by contacting the USPTO Contact Center at 800-786-9199, or it can be viewed on the USPTO website at http://www.uspto.gov/web/offices/pac/doc/general/index.html.

For information on preventing theft of your intellectual property (patents, trademarks and copyrights), you may wish to consult the U.S. Government website, http://www.stopfakes.gov. Part of a Department of Commerce initiative, this website includes self-help "toolkits" giving innovators guidance on how to protect intellectual property in specific countries such as China, Korea and Mexico. For questions regarding patent enforcement issues, applicants may call the U.S. Government hotline at 1-866-999-HALT (1-866-999-4158).

LICENSE FOR FOREIGN FILING UNDER
Title 35, United States Code, Section 184
Title 37, Code of Federal Regulations, 5.11 & 5.15

GRANTED

The applicant has been granted a license under 35 U.S.C. 184, if the phrase "IF REQUIRED, FOREIGN FILING LICENSE GRANTED" followed by a date appears on this form. Such licenses are issued in all applications where the conditions for issuance of a license have been met, regardless of whether or not a license may be required as set forth in 37 CFR 5.15. The scope and limitations of this license are set forth in 37 CFR 5.15(a) unless an earlier license has been issued under 37 CFR 5.15(b). The license is subject to revocation upon written notification. The date indicated is the effective date of the license, unless an earlier license of similar scope has been granted under 37 CFR 5.13 or 5.14.

This license is to be retained by the licensee and may be used at any time on or after the effective date thereof unless it is revoked. This license is automatically transferred to any related applications(s) filed under 37 CFR 1.53(d). This license is not retroactive.

The grant of a license does not in any way lessen the responsibility of a licensee for the security of the subject matter as imposed by any Government contract or the provisions of existing laws relating to espionage and the national security or the export of technical data. Licensees should apprise themselves of current regulations especially with respect to certain countries, of other agencies, particularly the Office of Defense Trade Controls, Department of State (with respect to Arms, Munitions and Implements of War (22 CFR 121-128)); the Bureau of Industry and Security, Department of Commerce (15 CFR parts 730-774); the Office of Foreign Assets Control, Department of Treasury (31 CFR Parts 500+) and the Department of Energy.

NOT GRANTED

No license under 35 U.S.C. 184 has been granted at this time, if the phrase "IF REQUIRED, FOREIGN FILING LICENSE GRANTED" DOES NOT appear on this form. Applicant may still petition for a license under 37 CFR 5.12, if a license is desired before the expiration of 6 months from the filing date of the application. If 6 months has lapsed from the filing date of this application and the licensee has not received any indication of a secrecy order under 35 U.S.C. 181, the licensee may foreign file the application pursuant to 37 CFR 5.15(b).

UNITED STATES PATENT AND TRADEMARK OFFICE

UNITED STATES DEPARTMENT OF COMMERCE
United States Patent and Trademark Office
Address: COMMISSIONER FOR PATENTS
P.O. Box 1450
Alexandria, Virginia 22313-1450
www.uspto.gov

APPL NO.	FILING OR 371 (c) DATE	ART UNIT	FIL FEE REC'D	ATTY.DOCKET NO	DRAWINGS	TOT CLMS	IND CLMS
60/819,281	07/06/2006		100	57892/M1006	6		

CONFIRMATION NO. 5829

CORRECTED FILING RECEIPT

OC000000020181240

23363
CHRISTIE, PARKER & HALE, LLP
PO BOX 7068
PASADENA, CA 91109-7068

Date Mailed: 08/24/2006

Receipt is acknowledged of this provisional Patent Application. It will not be examined for patentability and will become abandoned not later than twelve months after its filing date. Be sure to provide the U.S. APPLICATION NUMBER, FILING DATE, NAME OF APPLICANT, and TITLE OF INVENTION when inquiring about this application. Fees transmitted by check or draft are subject to collection. Please verify the accuracy of the data presented on this receipt. **If an error is noted on this Filing Receipt, please mail to the Commissioner for Patents P.O. Box 1450 Alexandria Va 22313-1450. Please provide a copy of this Filing Receipt with the changes noted thereon. If you received a "Notice to File Missing Parts" for this application, please submit any corrections to this Filing Receipt with your reply to the Notice. When the USPTO processes the reply to the Notice, the USPTO will generate another Filing Receipt incorporating the requested corrections (if appropriate).**

Applicant(s)

Mehrdad Zomorrodi, West Hills, CA;

Power of Attorney:

Raymond Tabandeh--43945

If Required, Foreign Filing License Granted: 07/24/2006

The country code and number of your priority application, to be used for filing abroad under the Paris Convention, is US60/819,281

Projected Publication Date: None, application is not eligible for pre-grant publication

Non-Publication Request: Not applicable

Early-Publication Request: Not applicable

**** SMALL ENTITY ****

Title

Method and apparatus for DC switching lamp driver

PROTECTING YOUR INVENTION OUTSIDE THE UNITED STATES

Since the rights granted by a U.S. patent extend only throughout the territory of the United States and have no effect in a foreign country, an inventor who wishes patent protection in another country must apply for a patent in a specific country or in regional patent offices. Applicants may wish to consider the filing of an international application under the Patent Cooperation Treaty (PCT). An international (PCT) application generally has the same effect as a regular national patent application in each PCT-member country. The PCT process **simplifies** the filing of patent applications on the same invention in member countries, but **does not result** in a grant of "an international patent" and does not eliminate the need of applicants to file additional documents and fees in countries where patent protection is desired.

Almost every country has its own patent law, and a person desiring a patent in a particular country must make an application for patent in that country in accordance with its particular laws. Since the laws of many countries differ in various respects from the patent law of the United States, applicants are advised to seek guidance from specific foreign countries to ensure that patent rights are not lost prematurely.

Applicants also are advised that in the case of inventions made in the United States, the Director of the USPTO must issue a license before applicants can apply for a patent in a foreign country. The filing of a U.S. patent application serves as a request for a foreign filing license. The application's filing receipt contains further information and guidance as to the status of applicant's license for foreign filing.

Applicants may wish to consult the USPTO booklet, "General Information Concerning Patents" (specifically, the section entitled "Treaties and Foreign Patents") for more information on timeframes and deadlines for filing foreign patent applications. The guide is available either by contacting the USPTO Contact Center at 800-786-9199, or it can be viewed on the USPTO website at http://www.uspto.gov/web/offices/pac/doc/general/index.html.

For information on preventing theft of your intellectual property (patents, trademarks and copyrights), you may wish to consult the U.S. Government website, http://www.stopfakes.gov. Part of a Department of Commerce initiative, this website includes self-help "toolkits" giving innovators guidance on how to protect intellectual property in specific countries such as China, Korea and Mexico. For questions regarding patent enforcement issues, applicants may call the U.S. Government hotline at 1-866-999-HALT (1-866-999-4158).

LICENSE FOR FOREIGN FILING UNDER
Title 35, United States Code, Section 184
Title 37, Code of Federal Regulations, 5.11 & 5.15

GRANTED

The applicant has been granted a license under 35 U.S.C. 184, if the phrase "IF REQUIRED, FOREIGN FILING LICENSE GRANTED" followed by a date appears on this form. Such licenses are issued in all applications where the conditions for issuance of a license have been met, regardless of whether or not a license may be required as set forth in 37 CFR 5.15. The scope and limitations of this license are set forth in 37 CFR 5.15(a) unless an earlier license has been issued under 37 CFR 5.15(b). The license is subject to revocation upon written notification. The date indicated is the effective date of the license, unless an earlier license of similar scope has been granted under 37 CFR 5.13 or 5.14.

This license is to be retained by the licensee and may be used at any time on or after the effective date thereof unless it is revoked. This license is automatically transferred to any related applications(s) filed under 37 CFR 1.53(d). This license is not retroactive.

The grant of a license does not in any way lessen the responsibility of a licensee for the security of the subject matter as imposed by any Government contract or the provisions of existing laws relating to espionage and the national security or the export of technical data. Licensees should apprise themselves of current regulations especially with respect to certain countries, of other agencies, particularly the Office of Defense Trade Controls, Department of State (with respect to Arms, Munitions and Implements of War (22 CFR 121-128)); the Bureau of Industry and Security, Department of Commerce (15 CFR parts 730-774); the Office of Foreign Assets Control, Department of Treasury (31 CFR Parts 500+) and the Department of Energy.

NOT GRANTED

No license under 35 U.S.C. 184 has been granted at this time, if the phrase "IF REQUIRED, FOREIGN FILING LICENSE GRANTED" DOES NOT appear on this form. Applicant may still petition for a license under 37 CFR 5.12, if a license is desired before the expiration of 6 months from the filing date of the application. If 6 months has lapsed from the filing date of this application and the licensee has not received any indication of a secrecy order under 35 U.S.C. 181, the licensee may foreign file the application pursuant to 37 CFR 5.15(b).

UNITED STATES PATENT AND TRADEMARK OFFICE

UNITED STATES DEPARTMENT OF COMMERCE
United States Patent and Trademark Office
Address: COMMISSIONER FOR PATENTS
P.O. Box 1450
Alexandria, Virginia 22313-1450
www.uspto.gov

APPL NO.	FILING OR 371 (c) DATE	ART UNIT	FIL FEE REC'D	ATTY.DOCKET NO	DRAWINGS	TOT CLMS	IND CLMS
60/819,356	07/07/2006		100	30008-508 PRO			

CONFIRMATION NO. 5913

CORRECTED FILING RECEIPT

OC000000020497423

MINTZ, LEVIN, COHN, FERRIS,
GLOVSKY AND POPEO, P.C.
CHRYSLER CENTER
666 Third Avenue, 24th Floor
New York, NY 10017

Date Mailed: 09/20/2006

Receipt is acknowledged of this provisional Patent Application. It will not be examined for patentability and will become abandoned not later than twelve months after its filing date. Be sure to provide the U.S. APPLICATION NUMBER, FILING DATE, NAME OF APPLICANT, and TITLE OF INVENTION when inquiring about this application. Fees transmitted by check or draft are subject to collection. Please verify the accuracy of the data presented on this receipt. **If an error is noted on this Filing Receipt, please mail to the Commissioner for Patents P.O. Box 1450 Alexandria Va 22313-1450. Please provide a copy of this Filing Receipt with the changes noted thereon. If you received a "Notice to File Missing Parts" for this application, please submit any corrections to this Filing Receipt with your reply to the Notice. When the USPTO processes the reply to the Notice, the USPTO will generate another Filing Receipt incorporating the requested corrections (if appropriate).**

Applicant(s)

Ofer Yodfat, Maccabim-Reut, ISRAEL;
Nir-Shafrir Ido, Yokneam, ISRAEL;

Power of Attorney:

Brian Hopkins--42669

If Required, Foreign Filing License Granted: 07/25/2006

The country code and number of your priority application, to be used for filing abroad under the Paris Convention, is US60/819,356

Projected Publication Date: None, application is not eligible for pre-grant publication

Non-Publication Request: Not applicable

Early-Publication Request: Not applicable

**** SMALL ENTITY ****

Title

Systems and methods of communications of a medicinal fluid delivery system

PROTECTING YOUR INVENTION OUTSIDE THE UNITED STATES

Since the rights granted by a U.S. patent extend only throughout the territory of the United States and have no effect in a foreign country, an inventor who wishes patent protection in another country must apply for a patent in a specific country or in regional patent offices. Applicants may wish to consider the filing of an international application under the Patent Cooperation Treaty (PCT). An international (PCT) application generally has the same effect as a regular national patent application in each PCT-member country. The PCT process **simplifies** the filing of patent applications on the same invention in member countries, but **does not result** in a grant of "an international patent" and does not eliminate the need of applicants to file additional documents and fees in countries where patent protection is desired.

Almost every country has its own patent law, and a person desiring a patent in a particular country must make an application for patent in that country in accordance with its particular laws. Since the laws of many countries differ in various respects from the patent law of the United States, applicants are advised to seek guidance from specific foreign countries to ensure that patent rights are not lost prematurely.

Applicants also are advised that in the case of inventions made in the United States, the Director of the USPTO must issue a license before applicants can apply for a patent in a foreign country. The filing of a U.S. patent application serves as a request for a foreign filing license. The application's filing receipt contains further information and guidance as to the status of applicant's license for foreign filing.

Applicants may wish to consult the USPTO booklet, "General Information Concerning Patents" (specifically, the section entitled "Treaties and Foreign Patents") for more information on timeframes and deadlines for filing foreign patent applications. The guide is available either by contacting the USPTO Contact Center at 800-786-9199, or it can be viewed on the USPTO website at http://www.uspto.gov/web/offices/pac/doc/general/index.html.

For information on preventing theft of your intellectual property (patents, trademarks and copyrights), you may wish to consult the U.S. Government website, http://www.stopfakes.gov. Part of a Department of Commerce initiative, this website includes self-help "toolkits" giving innovators guidance on how to protect intellectual property in specific countries such as China, Korea and Mexico. For questions regarding patent enforcement issues, applicants may call the U.S. Government hotline at 1-866-999-HALT (1-866-999-4158).

LICENSE FOR FOREIGN FILING UNDER
Title 35, United States Code, Section 184
Title 37, Code of Federal Regulations, 5.11 & 5.15

GRANTED

The applicant has been granted a license under 35 U.S.C. 184, if the phrase "IF REQUIRED, FOREIGN FILING LICENSE GRANTED" followed by a date appears on this form. Such licenses are issued in all applications where the conditions for issuance of a license have been met, regardless of whether or not a license may be required as set forth in 37 CFR 5.15. The scope and limitations of this license are set forth in 37 CFR 5.15(a) unless an earlier license has been issued under 37 CFR 5.15(b). The license is subject to revocation upon written notification. The date indicated is the effective date of the license, unless an earlier license of similar scope has been granted under 37 CFR 5.13 or 5.14.

This license is to be retained by the licensee and may be used at any time on or after the effective date thereof unless it is revoked. This license is automatically transferred to any related applications(s) filed under 37 CFR 1.53(d). This license is not retroactive.

The grant of a license does not in any way lessen the responsibility of a licensee for the security of the subject matter as imposed by any Government contract or the provisions of existing laws relating to espionage and the national security or the export of technical data. Licensees should apprise themselves of current regulations especially with respect to certain countries, of other agencies, particularly the Office of Defense Trade Controls, Department of State (with respect to Arms, Munitions and Implements of War (22 CFR 121-128)); the Bureau of

Industry and Security, Department of Commerce (15 CFR parts 730-774); the Office of Foreign Assets Control, Department of Treasury (31 CFR Parts 500+) and the Department of Energy.

NOT GRANTED

No license under 35 U.S.C. 184 has been granted at this time, if the phrase "IF REQUIRED, FOREIGN FILING LICENSE GRANTED" DOES NOT appear on this form. Applicant may still petition for a license under 37 CFR 5.12, if a license is desired before the expiration of 6 months from the filing date of the application. If 6 months has lapsed from the filing date of this application and the licensee has not received any indication of a secrecy order under 35 U.S.C. 181, the licensee may foreign file the application pursuant to 37 CFR 5.15(b).

UNITED STATES PATENT AND TRADEMARK OFFICE

Commissioner for Patents
United States Patent and Trademark Office
P.O. Box 1450
Alexandria, VA 22313-1450
www.uspto.gov

BIRCH STEWART KOLASCH & BIRCH
PO BOX 747
FALLS CHURCH VA 22040-0747

COPY MAILED
NOV 09 2007
OFFICE OF PETITIONS

In re Application of	:	
Oi, et al.	:	
Application No. 60/819,388	:	DECISION ON PETITION
Filed: July 5\10, 2006	:	
Attorney Docket No. 0020-5498PUS1	:	

This is a decision on the petition under 37 CFR 1.182, filed, July 5, 2007, to change the name of inventor "Mariko Furukawa" to – Mariko Oi --.

The petition is **GRANTED**.

Office records have been updated to reflect the inventor's change of name. A corrected Filing Receipt, which reflects the inventor's change of name, accompanies this decision on petition.

Any questions concerning this matter may be directed to the undersigned at (571) 272-3205.

Alesia M. Brown
Petitions Attorney
Office of Petitions

ATTACHMENT: Corrected Filing Receipt

APPL NO.	FILING OR 371(c) DATE	ART UNIT	FIL FEE REC'D	ATTY.DOCKET NO	TOT CLMS	IND CLMS
60/819,388	07/10/2006		200	0020-5498PUS1		

CONFIRMATION NO. 6597

CORRECTED FILING RECEIPT

OC000000026656855

2292
BIRCH STEWART KOLASCH & BIRCH
PO BOX 747
FALLS CHURCH, VA 22040-0747

Applicant(s)

Mariko Oi, Osaka-shi, JAPAN;
Yasunori Tsuboi, Osaka-shi, JAPAN;
Yasunori Moritani, Osaka-shi, JAPAN;

Power of Attorney:

Gerald Murphy Jr--28977

If Required, Foreign Filing License Granted: 11/07/2007

The country code and number of your priority application, to be used for filing abroad under the Paris Convention, is US60/819,388

Projected Publication Date: None, application is not eligible for pre-grant publication

Non-Publication Request: Not applicable

Early-Publication Request: Not applicable

Title

Pyrazolo [1,5-A] pyrimidine compounds

UNITED STATES PATENT AND TRADEMARK OFFICE

Commissioner for Patents
United States Patent and Trademark Office
P.O. Box 1450
Alexandria, VA 22313-1450
www.uspto.gov

DOCKET CLERK
P.O. DRAWER 800889
DALLAS TX 75380

COPY MAILED

MAR 26 2007

OFFICE OF PETITIONS

In re Application of	:	
Griffis et al.	:	
Application No. 60/819,995	:	DECISION GRANTING PETITION
Filed: 11 July, 2006	:	
Atty Dckt No. PRES06-00384	:	

This is a decision in reference to the petition filed on 14 August, 2006, under 37 CFR 1.10(c), requesting that the above-identified application be accorded a filing date of 11 July, 2006, rather than the currently-accorded filing date of 10 July, 2006.

The petition is **granted**.

Petitioners assert that the application was deposited in Express Mail Service on 11 July, 2006. In support, petitioners have provided a copy of the Express Mail Customer Label EV915226827US (the same Express Mail number found on the itemized provisional application cover sheet sheet accompanying the original application papers located in the official file). The "date-in" on the Express Mail label is "7-11-06".

As such, the showing of record is that the correct date of deposit in Express Mail is 11 July, 2006.

In view of the above, the petition is granted. No fee is required and none has been charged.

The application is being referred to the Office of Initial Patent Examination (OIPE) for correction of the filing date to 11 July, 2006, and for issuance of a corrected Filing Receipt.

Telephone inquiries related to this decision should be directed to the undersigned at 571-272-3231.

D Wood

Douglas I. Wood
Senior Petitions Attorney
Office of Petitions

UNITED STATES PATENT AND TRADEMARK OFFICE

COMMISSIONER FOR PATENTS
UNITED STATES PATENT AND TRADEMARK OFFICE
P.O. BOX 1450
ALEXANDRIA, VA 22313-1450
www.uspto.gov

COPY MAILED

DEC 10 2007

OFFICE OF PETITIONS

JOHN R. LANSDOWNE, P.C
6121 INDIAN SCHOOL, N.E. STE. 101
ALBUQUERQUE, NM 87110

In re Application of
Louis S. Camilli
Application No. 60/820,031
Filed: July 21, 2006
Attorney Docket No. None

ON PETITION

This is a decision on the petition under 37 CFR 1.137(b), filed by June 15, 2007, to revive the above-identified application.

The petition is **GRANTED**.

The application became abandoned for failure to timely respond to a Notice to File Missing Parts mailed September 18, 2006. The notice set a two-month period to respond and required (1) a provisional application cover sheet under 37 CFR 1.51(c)(1), or an Application Data Sheet (ADS) identifying either the city and state or city and foreign country of the residence of each inventor and (2) the surcharge as set forth in 37 CFR 1.16(g) of $25. A Notice of Abandonment was mailed on May 22, 2007. On June 15, 2007, the present petition was filed.

The petition satisfies the requirements of 37 CFR 1.137(b) in that petitioner has supplied (1) the reply in the form of a provisional application cover sheet and the $25 surcharge; (2) the petition fee of $750; and (3) an adequate statement of unintentional delay. Accordingly, the failure to timely reply to the Notice of September 18, 2006 is accepted as being unintentionally delayed.

Subject to the provisions of 35 U.S.C. § 119(e)(3) and § 1.7(b), a provisional application will not be regarded as pending after twelve months from its filing date under any circumstances.

The file does not indicate a change of address has been submitted, although the address given on the petition differs from the address of record. If appropriate, a change of address should be filed in accordance with MPEP 601.03. A courtesy copy of this decision is being mailed to the address given on the petition; however, the Office will mail all future correspondence solely to the address of record.

Telephone inquires related to this decision should be directed to the undersigned at (571) 272-3204.

Sherry D. Brinkley
Petitions Examiner
Office of Petitions

cc: JOHN R. LANSDOWNE
2155 LOUISIANA BLVD N.E., STE. 8500
ALBUQUERQUE NM 87110

UNITED STATES PATENT AND TRADEMARK OFFICE

Commissioner for Patents
United States Patent and Trademark Office
P.O. Box 1450
Alexandria, VA 22313-1450
www.uspto.gov

NOVARTIS
CORPORATE INTELLECTUAL PROPERTY
ONE HEALTH PLAZA 104/3
EAST HANOVER NJ 07936-1080

COPY MAILED
NOV 26 2007
OFFICE OF PETITIONS

In re Application of
Timothy Brian Hurley et al. :
Application No. 60/820,367 : ON PETITION
Filed: July 26, 2006 :
Attorney Docket Number: 50073-US-PSP :

This is a decision on the petition under 37 CFR 1.182 filed October 11, 2007 to correct the name of the inventor due to error on the part of the applicant.

The petition is **GRANTED**.

Petitioner has requested that the inventor incorrectly listed on the application as Brian Hurley be correctly listed as Timothy Brian Hurley. A declaration by the inventor explains that the error was without deceptive intent. As well. A Supplemental Application Data Sheet was filed May 17, 2007.

In view of the instant request, the first named inventor's name data has been changed.

Inventor 1) Timothy Brian Hurley

The application is being forwarded to the Office of Patent Application Processing for the mailing of a corrected filing receipt.

Telephone inquiries concerning this matter should be directed to the undesigned Petitions Attorney at (571) 272-3212.

Patricia Faison-Ball

Patricia Faison-Ball
Senior Petitions Attorney
Office of Petitions

UNITED STATES PATENT AND TRADEMARK OFFICE

Commissioner for Patents
United States Patent and Trademark Office
P.O. Box 1450
Alexandria, VA 22313-1450
www.uspto.gov

JAIME ZACHARIAS
AV. LUIS PASTEUR 5917 - VITACURA
SANTIAGO 66707-75 CL CHILE

COPY MAILED

FEB 2 7 2008

OFFICE OF PETITIONS

In re Application of	:	
Jaime Zacharias	:	
Application No. 60/820,792	:	ON PETITION
Filed: July 30, 2006	:	
Attorney Docket No.	:	

This is a decision on the petition under the unintentional provisions of 37 CFR 1.137(b), filed May 24, 2007, to revive the above-identified application.

The petition is **DISMISSED**.

Any request for reconsideration of this decision must be submitted within TWO (2) MONTHS from the mail date of this decision. Extensions of time under 37 CFR 1.136(a) are permitted. The reconsideration request should include a cover letter entitled "Renewed Petition under 37 CFR 1.137(b)." This is **not** a final agency action within the meaning of 5 U.S.C. § 704.

The application became abandoned for failure to reply in a timely manner to the Notice to File Missing Parts of Nonprovisional Application (Notice), mailed August 14, 2006. The Notice set a period for reply of two (2) months from the mail date of the Notice. No extensions of time under the provisions of 37 CFR 1.136(a) was obtained. Accordingly, the application became abandoned on October 16, 2006. The Notice of Abandonment was mailed April 27, 2007.

A grantable petition under 37 CFR 1.137(b) must be accompanied by: (1) the required reply, unless previously filed; (2) the petition fee as set forth in 37 CFR 1.17(m); (3) a statement that the entire delay in filing the required reply from the due date for the reply until the filing of a grantable petition pursuant to 37 CFR 1.137(b) was unintentional; and (4) any terminal disclaimer (and fee as set forth in 37 CFR 1.20(d)) required by 37 CFR 1.137(d). Where there is a question as to whether either the abandonment or the delay in filing a petition under 37 CFR 1.137 was unintentional, the Director may require additional information. See MPEP 711.03(c)(II)(C) and (D). The instant petition lacks item(s) (2).

The petition in the above-identified application was not accompanied by payment of the required fee. No consideration on the merits can be given that petition until the required fee is received.

Further correspondence with respect to this matter should be addressed as follows:

By Mail: Mail Stop PETITION
Commissioner for Patents
P. O. Box 1450
Alexandria, VA 22313-1450

By hand: U. S. Patent and Trademark Office
Customer Service Window, Mail Stop Petitions
Randolph Building
401 Dulany Street
Alexandria, VA 22314

The centralized facsimile number is **(571) 273-8300.**

Telephone inquiries concerning this decision should be directed to Terri Williams at (571) 272-2991.

Liana Walsh
Petitions Examiner
Office of Petitions

UNITED STATES PATENT AND TRADEMARK OFFICE

Commissioner for Patents
United States Patent and Trademark Office
P.O. Box 1450
Alexandria, VA 22313-1450
www.uspto.gov

FOREST LABORATORIES, INC.
ATT: MICHAEL CIRAOLO
48 MALL DRIVE
COMMACK NY 11725

COPY MAILED

JUN 0 4 2007

OFFICE OF PETITIONS

In re Application of	:	
Matthew Ronsheim	:	
Application No. 60/821,141	:	DECISION ON PETITION
Filed: August 2, 2006	:	
For: INDAZOLONE DERVATIVES	:	

This is a decision on the request filed October 6, 2006, which is being treated as a petition under 37 CFR 1.181 (no fee), requesting refund of the filing fee for the above-identified application.

The petition is **GRANTED**.

Petitioner asserts that the instant application was an unintended duplicate filing via EFS-Web.

37 CFR 1.26(a) states, in part: "The Director may refund any fee paid by mistake or in excess of that required. A change of purpose after the payment of a fee, such as when a party desires to withdraw a patent filing for which the fee was paid, including an application, an appeal, or a request for an oral hearing, will not entitle a party to a refund of such fee."

However, the Office may find a mistake pursuant to 37 CFR 1.26, waive the presumption in 37 CFR 1.26 that applications are not entitled to filing fee refunds, and refund the filing fees associated with unintended duplicate application filings via EFS-Web.

The Office has accepted petitioner's statement as an assertion that the duplicate application was filed by mistake. Accordingly, the filing fee of $200, submitted on August 2, 2006, has been credited to petitioner's deposit account no. 50-3899.

As no further action will be taken in this application, the request for refund of the filing fee is also being construed as a request to expressly abandon the above-mentioned application. Accordingly, this matter is being referred to the Office of Patent Publication for express abandonment of the subject application.

Telephone inquiries concerning this decision should be directed to the undersigned at (571) 272-3208.

Karen Creasy

Karen Creasy
Petitions Examiner
Office of Petitions

UNITED STATES PATENT AND TRADEMARK OFFICE

Commissioner for Patents
United States Patent and Trademark Office
P.O. Box 1450
Alexandria, VA 22313-1450
www.uspto.gov

JERRY A SCHULMAN
1 S 376 SUMMIT
COURT C
OAKBROOK TERRACE IL 60181

COPY MAILED

NOV 29 2007

OFFICE OF PETITIONS

In re Application of		
Uri Rapoport	:	
Application No. 60/821,167	:	DECISION ON
Filed: August 2, 2006	:	PETITION
Attorney Docket No. 10253-2-3	:	

This is in response to the petition to revive under 37 CFR 1.137(b), filed August 1, 2007, which is also being treated as a petition to revive in the alternative under 37 CFR 1.137(a), in light of applicant's request.

The petition under 37 CFR 1.137(a) is **DISMISSED**.

The petition under 37 CFR 1.137(b) is **GRANTED**.

The above-identified application became abandoned for failure to timely file a reply to the Notice to File Missing Parts of Provisional Application, mailed August 11, 2006. This Notice set an extendable period for reply of two (2) months. No extensions of time under 37 CFR 1.136(a) were obtained. No reply having been received, the application became abandoned on October 12, 2006. The Office mailed a Notice of Abandonment on April 25, 2007.

Petition Under 37 CFR 1.137(a):

A grantable petition under 37 CFR 1.137(a) must be accompanied by: (1) the reply required to the outstanding Office action or notice, unless previously filed; (2) the petition fee set forth in 37 CFR 1.17(l); (3) a showing to the satisfaction of the Commissioner that the entire delay in filing the required reply from the due date for the reply until the filing of a grantable petition pursuant to this paragraph was unavoidable; and (4) any terminal disclaimer (and fee as set forth in 37 CFR 1.20(d)) required pursuant to 37 CFR 1.137(d). The instant petition lacks item (2).

Applicants did not submit the fee for a petition to revive under 37 CFR 1.137(a). The petition fee required for a petition to revive is required for the filing, not merely the grant, of the petition.[1] Accordingly, the petition under 37 CFR 1.137(a) must be dismissed.

Petition Under 37 CFR 1.137(b):

A grantable petition under 37 CFR 1.137(b) must be accompanied by: (1) the required reply, unless previously filed; (2) the petition fee as set forth in 37 CFR 1.17(m); (3) a statement that the entire delay in filing the required reply from the due date for the reply until the filing of a grantable petition pursuant to 37 CFR 1.137(b) was unintentional; and (4) any terminal disclaimer (and fee as set forth in 37 CFR 1.20(d)) required by 37 CFR 1.137(d).

With the instant petition, petitioner paid the petition fee, submitted the required reply in the form of an ADS, and made the proper statement of unintentional delay.

The matter is being forwarded to the Office of Patent Application Processing for pre-examination processing.

Telephone inquiries related to this decision should be directed to the undersigned at 571-272-3207.

Cliff Congo
Petitions Attorney
Office of Petitions

---

[1] See MPEP 711.03(c)(II)(B).

UNITED STATES PATENT AND TRADEMARK OFFICE

Commissioner for Patents
United States Patent and Trademark Office
P.O. Box 1450
Alexandria, VA 22313-1450
www.uspto.gov

JERRY A SCHULMAN
1 S 376 SUMMIT
COURT C
OAKBROOK TERRACE IL 60181

COPY MAILED

NOV 29 2007

OFFICE OF PETITIONS

In re Application of
Ehud Katznelson :
Application No. 60/821,179 : DECISION ON
Filed: August 2, 2006 : PETITION
Attorney Docket No. 10217-2-25 :

This is in response to the petition to revive under 37 CFR 1.137(b), filed August 1, 2007, which is also being treated as a petition to revive in the alternative under 37 CFR 1.137(a), in light of applicant's request.

The petition under 37 CFR 1.137(a) is **DISMISSED**.

The petition under 37 CFR 1.137(b) is **GRANTED**.

The above-identified application became abandoned for failure to timely file a reply to the Notice to File Missing Parts of Provisional Application, mailed August 14, 2006. This Notice set an extendable period for reply of two (2) months. No extensions of time under 37 CFR 1.136(a) were obtained. No reply having been received, the application became abandoned on October 15, 2006. The Office mailed a Notice of Abandonment on April 27, 2007.

Petition Under 37 CFR 1.137(a):

A grantable petition under 37 CFR 1.137(a) must be accompanied by: (1) the reply required to the outstanding Office action or notice, unless previously filed; (2) the petition fee set forth in 37 CFR 1.17(l); (3) a showing to the satisfaction of the Commissioner that the entire delay in filing the required reply from the due date for the reply until the filing of a grantable petition pursuant to this paragraph was unavoidable; and (4) any terminal disclaimer (and fee as set forth in 37 CFR 1.20(d)) required pursuant to 37 CFR 1.137(d). The instant petition lacks item (2).

Applicants did not submit the fee for a petition to revive under 37 CFR 1.137(a). The petition fee required for a petition to revive is required for the filing, not merely the grant, of the petition.[1] Accordingly, the petition under 37 CFR 1.137(a) must be dismissed.

Petition Under 37 CFR 1.137(b):

A grantable petition under 37 CFR 1.137(b) must be accompanied by: (1) the required reply, unless previously filed; (2) the petition fee as set forth in 37 CFR 1.17(m); (3) a statement that the entire delay in filing the required reply from the due date for the reply until the filing of a grantable petition pursuant to 37 CFR 1.137(b) was unintentional; and (4) any terminal disclaimer (and fee as set forth in 37 CFR 1.20(d)) required by 37 CFR 1.137(d).

With the instant petition, petitioner paid the petition fee, submitted the required reply in the form of an ADS, and made the proper statement of unintentional delay.

The matter is being forwarded to the Office of Patent Application Processing for pre-examination processing.

Telephone inquiries related to this decision should be directed to the undersigned at 571-272-3207.

Cliff Congo
Petitions Attorney
Office of Petitions

---

[1] See MPEP 711.03(c)(II)(B).

UNITED STATES PATENT AND TRADEMARK OFFICE

Commissioner for Patents
United States Patent and Trademark Office
P.O. Box 1450
Alexandria, VA 22313-1450
www.uspto.gov

J. GORDON THOMSON
P.O. BOX 8865
VICTORIA BC V8V 3Z1
CANADA

COPY MAILED

AUG 17 2007

OFFICE OF PETITIONS

In re Application of	:	
PAUL LEM	:	
Application No. 60/821,240	:	ON PETITION
Filed: 08/02/2006	:	
Attorney Docket No. Lem-01	:	

This is a decision on the petition under 37 CFR 1.137(a), filed May 9, 2007, to revive the above-identified application.

The petition is **GRANTED.**

The application became abandoned for failure to reply in a timely manner to the Notice to File Missing Parts of Nonprovisional Application (Notice), mailed August 11, 2006. The Notice set a period for reply of two (2) months from the mail date of the Notice. No extensions of time under the provisions of 37 CFR 1.136(a) were obtained. Accordingly, the application became abandoned on October 12, 2006. A Notice of Abandonment was mailed on April 25, 2007.

The petition satisfies the requirements of 37 CFR 1.137(a) in that petitioner has supplied (1) the required reply in the form of a provisional cover sheet and surcharge; (2) the petition fee of $250.00; and (3) a showing to the satisfaction of the Director that the entire delay was unavoidable.

This application is being referred to the Office of Initial Patent Examination for further processing.

Telephone inquiries concerning this decision should be directed to the undersigned at (571) 272-3211.

Christina Tartera Donnell

Christina Tartera Donnell
Senior Petitions Attorney
Office of Petitions

UNITED STATES PATENT AND TRADEMARK OFFICE

Commissioner for Patents
United States Patent and Trademark Office
P.O. Box 1450
Alexandria, VA 22313-1450
www.uspto.gov

SINA MAJIDI
35 GRETMAN CRES
THORNHILL, L3T 5L9
CANADA

COPY MAILED

NOV 19 2007

OFFICE OF PETITIONS

In re Application of
Sina MAJIDI
Application No. 60/821,266
Filed: August 3, 2006
Attorney Docket No.

DECISION ON PETITION

This is a decision on the petition under the unintentional provisions of 37 CFR 1.137(b), filed May 29, 2007, and supplemented on September 27, 2007 and October 22, 2007, to revive the above-identified application.

The petition is **GRANTED**.

The application became abandoned for failure to reply in a timely manner to the Notice to File Missing Parts of Nonprovisional Application (Notice), mailed August 22, 2006. The Notice set a period for reply of two (2) months from the mail date of the Notice. No extensions of time under the provisions of 37 CFR 1.136(a) were obtained. Accordingly, the application became abandoned on October 23, 2006.

The petition satisfies the requirements of 37 CFR 1.137(b) in that petitioner has supplied (1) the reply in the form of a the required fee, (2) the petition fee of $750; and (3) an adequate statement of unintentional delay.

Telephone inquiries concerning this decision should be directed to Diane Goodwyn at (571)272-6735.

This application is being referred to the Office of Initial Patent Examination.

April Wise
Petitions Examiner
Office of Petitions

UNITED STATES PATENT AND TRADEMARK OFFICE

Commissioner for Patents
United States Patent and Trademark Office
P.O. Box 1450
Alexandria, VA 22313-1450
www.uspto.gov

GIFFORD, KRASS, SPRINKLE, ANDERSON & CITKOWSKI, P.C.
PO BOX 7021
TROY MI 48007-7021

COPY MAILED
DEC 17 2008

In re Application of	:	
Charles Keller	:	
Application No. 60/821,318	:	DECISION ON PETITION
Filed: August 3, 2006	:	
Attorney Docket No. UTX-11581/38	:	

This is a decision on the request filed October 19, 2006 and resubmitted on December 12, 2008, which is being treated as a petition under 37 CFR 1.181 (no fee), requesting refund of the filing fee for the above-identified application.

The petition is **GRANTED**.

Petitioner asserts that the instant application was an unintended duplicate filing via EFS-Web.

37 CFR 1.26(a) states, in part: "The Director may refund any fee paid by mistake or in excess of that required. A change of purpose after the payment of a fee, such as when a party desires to withdraw a patent filing for which the fee was paid, including an application, an appeal, or a request for an oral hearing, will not entitle a party to a refund of such fee."

However, the Office may find a mistake pursuant to 37 CFR 1.26, waive the presumption in 37 CFR 1.26 that applications are not entitled to filing fee refunds, and refund the filing fees associated with unintended duplicate application filings via EFS-Web.

The Office has accepted petitioner's statement as an assertion that the duplicate application was filed by mistake. Accordingly, the filing fee of $100, submitted on August 3, 2006, has been credited to petitioner's credit card account.

As no further action will be taken in this application, the request for refund of the filing fee is also being construed as a request to expressly abandon the above-mentioned application. Accordingly, this matter is being referred to the Office of Data Management for express abandonment of the subject application.

Telephone inquiries concerning this decision should be directed to the undersigned at (571) 272-3208.

Karen Creasy
Petitions Examiner
Office of Petitions

UNITED STATES PATENT AND TRADEMARK OFFICE

COMMISSIONER FOR PATENTS
UNITED STATES PATENT AND TRADEMARK OFFICE
P.O. BOX 1450
ALEXANDRIA, VA 22313-1450
WWW.USPTO.GOV

Paper No.

MORGAN, LEWIS & BOCKIUS, LLP.
2 PALO ALTO SQUARE
3000 EL CAMINO REAL
PALO ALTO CA 94306

COPY MAILED

AUG 16 2007

OFFICE OF PETITIONS

In re Application of :
Vanessa Fox et al. :
Application No. 60/821,560 : DECISION ON PETITION
Filed: August 4, 2006 :
Attorney Docket No. 60963-5242-PR :
Title: SYSTEM AND METHOD FOR :
MANAGING MULTIPLE DOMAIN NAMES FOR A :
WEBSITE IN A WEBSITE INDEXING SYSTEM :

This is a decision on the "Petition for a filing date under 37 CFR 1.57(b)," filed September 8, 2006, requesting that the above-identified application be accorded a filing date of August 4, 2006. The petition is properly treated as a petition pursuant to 37 C.F.R. § 1.53(e)(2)[1].

The application was deposited on August 4, 2006. However, on August 11, 2006, the Office of Initial Patent Examination (OIPE) mailed a "Notice of Incomplete Provisional Application - Filing Date not Granted" (notice) stating that the application had not been accorded a filing date, and advising applicants that a filing date would be accorded upon the deposit of drawings. The notice set a two-month period for response.

1 Any request for review of a notification pursuant to paragraph (e)(1) of this section, or a notification that the original application papers lack a portion of the specification or drawing(s), must be by way of a petition pursuant to this paragraph accompanied by the fee set forth in § 1.17(f). In the absence of a timely (§ 1.181(f)) petition pursuant to this paragraph, the filing date of an application in which the applicant was notified of a filing error pursuant to paragraph (e)(1) of this section will be the date the filing error is corrected.

On September 8, 2006, Petitioner filed the present petition, along with the petition fee, and asserted that although drawings were inadvertently omitted on filing, the specification of the present application incorporates by reference applications 60/686,492, 11/172,764, and 60/686,494. Consequently, Petitioner has requested that the Office accord a filing date of August 4, 2006 to Figures 1-7, provided with the present petition, as these Figures are present in applications 60/686,492, 11/172,764, and 60/686,494.

Applicants request that the application be amended to include the inadvertently omitted drawings on the basis that the application as filed contained an incorporation by reference statement, which incorporated three prior filed applications in their entirety. Applicants have not provided copies of these applications in which the inadvertently omitted drawings are found, but have provided copies of said drawings.

Petitioner's arguments and evidence have been considered. However, it is controlling that a review of the application confirms that as filed the application contained at least one method claim. MPEP 601.01(f) provides that:

> It has been USPTO practice to treat an application that contains at least one process or method claim as an application for which a drawing is not necessary for an understanding of the invention under 35 U.S.C. 113 (first sentence).

Thus, pursuant to § 601.01(f), a drawing is not considered essential for a filing date. Thus, the application is entitled to a filing date without drawings present in the application.

Accordingly, the Office should have mailed a Notice of Omitted Items and not a Notice of Incomplete Provisional Application.

No petition is required.

To the extent the present petition requests a filing date of August 4, 2006 with no drawings present in the application, the petition is **GRANTED**.

Given the basis for granting this petition, the petition fee is being refunded to Deposit Account No. 50-0310, as authorized.

The Office of Initial Patent Examination (OIPE) has been advised of this decision. Pursuant to this decision, the application has been referred to OIPE for:

- **correction of the filing date to August 4, 2006;**
- **for indication in Office records, as appropriate, that "0" sheets of drawings were present on filing and**
- **for issuance of a filing receipt.**

Petitioner will note that the present provisional application cannot claim priority to applications 60/686,492, 11/172,764, or 60/686,494, because a provisional application is not entitled to the right of priority under 35 U.S.C. 119 or 365(a) or § 1.55, or to the benefit of an earlier filing date under 35 U.S.C. §§ 120, 121 or 365(c) or 37 C.F.R. § 1.78 of any other application[2].

Moreover, the amendment which requests the entry of the above-mentioned drawings, submitted concurrently with this petition, cannot be entered. Petitioner is reminded that Provisional applications cannot be amended[3].

Telephone inquiries regarding *this decision* should be directed to Senior Attorney Paul Shanoski at (571) 272-3225[4].

Charles Pearson
Director
Office of Petitions

2 See 37 C.F.R. § 1.53(c)(4)
3 See 37 C.F.R. §1.53(c). See also MPEP 601.01(b).
4 Petitioner will note that all practice before the Office should be in writing, and the action of the Office will be based exclusively on the written record in the Office. See 37 C.F.R. §1.2. As such, Petitioner is reminded that no telephone discussion may be controlling or considered authority for Petitioner's further action(s).

UNITED STATES PATENT AND TRADEMARK OFFICE

COMMISSIONER FOR PATENTS
UNITED STATES PATENT AND TRADEMARK OFFICE
P.O. BOX 1450
ALEXANDRIA, VA 22313-1450
WWW.USPTO.GOV

Paper No.

MORGAN, LEWIS & BOCKIUS, LLP.
2 PALO ALTO SQUARE
3000 EL CAMINO REAL
PALO ALTO CA 94306

In re Application of	:	
Vanessa Fox et al.	:	
Application No. 60/821,561	:	DECISION ON PETITION
Filed: August 4, 2006	:	
Attorney Docket No. 60963-5243-PR	:	
Title: SYSTEM AND METHOD FOR	:	
VERIFYING AND REVOKING OWNERSHIP	:	
RIGHTS WITH RESPECT TO A WEBSITE IN	:	
A WEBSITE INDEXING SYSTEM	:	

This is a decision on the "Petition for a filing date under 37 CFR 1.57(b)," filed September 8, 2006, requesting that the above-identified application be accorded a filing date of August 4, 2006. The petition is properly treated as a petition pursuant to 37 C.F.R. § 1.53(e)(2)[1].

The application was deposited on August 4, 2006. However, on August 11, 2006, the Office of Initial Patent Examination (OIPE) mailed a "Notice of Incomplete Provisional Application - Filing Date not Granted" (notice) stating that the application had not been accorded a filing date, and advising applicants that a filing date would be accorded upon the deposit of drawings. The notice set a two-month period for response.

---

1 Any request for review of a notification pursuant to paragraph (e)(1) of this section, or a notification that the original application papers lack a portion of the specification or drawing(s), must be by way of a petition pursuant to this paragraph accompanied by the fee set forth in § 1.17(f). In the absence of a timely (§ 1.181(f)) petition pursuant to this paragraph, the filing date of an application in which the applicant was notified of a filing error pursuant to paragraph (e)(1) of this section will be the date the filing error is corrected.

On September 8, 2006, Petitioner filed the present petition, along with the petition fee, and asserted that although drawings were inadvertently omitted on filing, the specification of the present application incorporates by reference applications 60/686,492, 11/172,764, and 60/686,494. Consequently, Petitioner has requested that the Office accord a filing date of August 4, 2006 to Figures 1-7, provided with the present petition, as these Figures are present in applications 60/686,492, 11/172,764, and 60/686,494.

Applicants request that the application be amended to include the inadvertently omitted drawings on the basis that the application as filed contained an incorporation by reference statement, which incorporated three prior filed applications in their entirety. Applicants have not provided copies of these applications in which the inadvertently omitted drawings are found, but have provided copies of said drawings.

Petitioner's arguments and evidence have been considered. However, it is controlling that a review of the application confirms that as filed the application contained at least one method claim. MPEP 601.01(f) provides that:

> It has been USPTO practice to treat an application that contains at least one process or method claim as an application for which a drawing is not necessary for an understanding of the invention under 35 U.S.C. 113 (first sentence).

Thus, pursuant to § 601.01(f), a drawing is not considered essential for a filing date. Thus, the application is entitled to a filing date without drawings present in the application.

Accordingly, the Office should have mailed a Notice of Omitted Items and not a Notice of Incomplete Provisional Application.

No petition is required.

To the extent the present petition requests a filing date of August 4, 2006 with no drawings present in the application, the petition is **GRANTED**.

Given the basis for granting this petition, the petition fee is being refunded to Deposit Account No. 50-0310, as authorized.

The Office of Initial Patent Examination (OIPE) has been advised of this decision. Pursuant to this decision, the application has been referred to OIPE for:

- **correction of the filing date to August 4, 2006;**
- **for indication in Office records, as appropriate, that "0" sheets of drawings were present on filing and**
- **for issuance of a filing receipt.**

Petitioner will note that the present provisional application cannot claim priority to applications 60/686,492, 11/172,764, or 60/686,494, because a provisional application is not entitled to the right of priority under 35 U.S.C. 119 or 365(a) or § 1.55, or to the benefit of an earlier filing date under 35 U.S.C. §§ 120, 121 or 365(c), or 37 C.F.R. § 1.78 of any other application[2].

Moreover, the amendment which requests the entry of the above-mentioned drawings, submitted concurrently with this petition, cannot be entered. Petitioner is reminded that Provisional applications cannot be amended[3].

Telephone inquiries regarding *this decision* should be directed to Senior Attorney Paul Shanoski at (571) 272-3225[4].

Charles Pearson
Director
Office of Petitions

2 See 37 C.F.R. § 1.53(c)(4)
3 See 37 C.F.R. §1.53(c). See also MPEP 601.01(b).
4 Petitioner will note that all practice before the Office should be in writing, and the action of the Office will be based exclusively on the written record in the Office. See 37 C.F.R. §1.2. As such, Petitioner is reminded that no telephone discussion may be controlling or considered authority for Petitioner's further action(s).

UNITED STATES PATENT AND TRADEMARK OFFICE

Commissioner for Patents
United States Patent and Trademark Office
P.O. Box 1450
Alexandria, VA 22313-1450
www.uspto.gov

KUNZLER & MCKENZIE
8 EAST BROADWAY
SUITE 600
SALT LAKE CITY UT 84111

COPY MAILED

JUL 13 2007

OFFICE OF PETITIONS

In re Application of	:	
Wieczorrk, et al.	:	DECISION ON PETITION
Application No. 60/821,804	:	
Filed: August 8, 2006	:	
Attorney Docket No. 8-02-4763	:	

This is a decision on the "PETITION TO REVIVE UNDER 37 CFR 1.378 and REQUEST FOR CORRECTED FILING RECEIPT", filed June 12, 2007, which is being treated as a petition under 37 CFR 1.137(b).

The petition is **GRANTED**.

The above-identified application became abandoned for failure to timely reply to the Notice to File Missing Parts of Provisional Application, mailed September 15, 2006. This Notice set an extendable period for reply of two months from the mailing date of the Notice to submit a provisional application cover sheet or ADS, together with a $25 surcharge for its late filing. No repy having been received, the application became abandoned on November 16, 2006. A Notice of Abandonment was mailed on May 22, 2007.

With the instant petition, petitioner paid the petition fee, made the proper statement of unintentional delay, and submitted an ADS, together with the late surcharge.

The change of status to large entity has been processed. A corrected Filing Receipt is enclosed.

The matter is being forwarded to the Office of Initial Patent Examination for pre-examination processing.

Telephone inquiries related to this decision should be directed to the undersigned at (571)272-3207.

Cliff Congo
Petitions Attorney
Office of Petitions

Enc: Corrected Filing Receipt (2 pages)

UNITED STATES PATENT AND TRADEMARK OFFICE

UNITED STATES DEPARTMENT OF COMMERCE
United States Patent and Trademark Office
Address: COMMISSIONER FOR PATENTS
P.O. Box 1450
Alexandria, Virginia 22313-1450
www.uspto.gov

APPL NO.	FILING OR 371(c) DATE	ART UNIT	FIL FEE REC'D	ATTY.DOCKET NO	TOT CLMS	IND CLMS
60/821,804	08/08/2006		250	8-02-4763		

CONFIRMATION NO. 6666
CORRECTED FILING RECEIPT
OC000000024693595
OC000000024693595

36491
Kunzler & McKenzie
8 EAST BROADWAY
SUITE 600
SALT LAKE CITY, UT 84111

Date Mailed: 07/06/2007

Receipt is acknowledged of this provisional Patent Application. It will not be examined for patentability and will become abandoned not later than twelve months after its filing date. Be sure to provide the U.S. APPLICATION NUMBER, FILING DATE, NAME OF APPLICANT, and TITLE OF INVENTION when inquiring about this application. Fees transmitted by check or draft are subject to collection. Please verify the accuracy of the data presented on this receipt. **If an error is noted on this Filing Receipt, please mail to the Commissioner for Patents P.O. Box 1450 Alexandria Va 22313-1450. Please provide a copy of this Filing Receipt with the changes noted thereon. If you received a "Notice to File Missing Parts" for this application, please submit any corrections to this Filing Receipt with your reply to the Notice. When the USPTO processes the reply to the Notice, the USPTO will generate another Filing Receipt incorporating the requested corrections (if appropriate).**

Applicant(s)

Mark T. Wieczorek, Cookeville, TX;
Gerard Malgorn, Residence Not Provided;

Power of Attorney: The patent practitioners associated with Customer Number **36491**.

If Required, Foreign Filing License Granted: 09/14/2006

The country code and number of your priority application, to be used for filing abroad under the Paris Convention, is
US60/821,804

Projected Publication Date: None, application is not eligible for pre-grant publication

Non-Publication Request: Not applicable

Early-Publication Request: Not applicable

Title

QUICK DRAIN FILTER

PROTECTING YOUR INVENTION OUTSIDE THE UNITED STATES

Since the rights granted by a U.S. patent extend only throughout the territory of the United States and have no effect in a foreign country, an inventor who wishes patent protection in another country must apply for a patent in a specific country or in regional patent offices. Applicants may wish to consider the filing of an international application under the Patent Cooperation Treaty (PCT). An international (PCT) application generally has the same effect as a regular national patent application in each PCT-member country. The PCT process **simplifies** the filing of patent applications on the same invention in member countries, but **does not result** in a grant of "an international patent" and does not eliminate the need of applicants to file additional documents

and fees in countries where patent protection is desired.

Almost every country has its own patent law, and a person desiring a patent in a particular country must make an application for patent in that country in accordance with its particular laws. Since the laws of many countries differ in various respects from the patent law of the United States, applicants are advised to seek guidance from specific foreign countries to ensure that patent rights are not lost prematurely.

Applicants also are advised that in the case of inventions made in the United States, the Director of the USPTO must issue a license before applicants can apply for a patent in a foreign country. The filing of a U.S. patent application serves as a request for a foreign filing license. The application's filing receipt contains further information and guidance as to the status of applicant's license for foreign filing.

Applicants may wish to consult the USPTO booklet, "General Information Concerning Patents" (specifically, the section entitled "Treaties and Foreign Patents") for more information on timeframes and deadlines for filing foreign patent applications. The guide is available either by contacting the USPTO Contact Center at 800-786-9199, or it can be viewed on the USPTO website at http://www.uspto.gov/web/offices/pac/doc/general/index.html.

For information on preventing theft of your intellectual property (patents, trademarks and copyrights), you may wish to consult the U.S. Government website, http://www.stopfakes.gov. Part of a Department of Commerce initiative, this website includes self-help "toolkits" giving innovators guidance on how to protect intellectual property in specific countries such as China, Korea and Mexico. For questions regarding patent enforcement issues, applicants may call the U.S. Government hotline at 1-866-999-HALT (1-866-999-4158).

LICENSE FOR FOREIGN FILING UNDER
Title 35, United States Code, Section 184
Title 37, Code of Federal Regulations, 5.11 & 5.15

GRANTED

The applicant has been granted a license under 35 U.S.C. 184, if the phrase "IF REQUIRED, FOREIGN FILING LICENSE GRANTED" followed by a date appears on this form. Such licenses are issued in all applications where the conditions for issuance of a license have been met, regardless of whether or not a license may be required as set forth in 37 CFR 5.15. The scope and limitations of this license are set forth in 37 CFR 5.15(a) unless an earlier license has been issued under 37 CFR 5.15 (b). The license is subject to revocation upon written notification. The date indicated is the effective date of the license, unless an earlier license of similar scope has been granted under 37 CFR 5.13 or 5.14.

This license is to be retained by the licensee and may be used at any time on or after the effective date thereof unless it is revoked. This license is automatically transferred to any related applications(s) filed under 37 CFR 1.53(d). This license is not retroactive.

The grant of a license does not in any way lessen the responsibility of a licensee for the security of the subject matter as imposed by any Government contract or the provisions of existing laws relating to espionage and the national security or the export of technical data. Licensees should apprise themselves of current regulations especially with respect to certain countries, of other agencies, particularly the Office of Defense Trade Controls, Department of State (with respect to Arms, Munitions and Implements of War (22 CFR 121-128)); the Bureau of Industry and Security, Department of Commerce (15 CFR parts 730-774); the Office of Foreign Assets Control, Department of Treasury (31 CFR Parts 500+) and the Department of Energy.

NOT GRANTED

No license under 35 U.S.C. 184 has been granted at this time, if the phrase "IF REQUIRED, FOREIGN FILING LICENSE GRANTED" DOES NOT appear on this form. Applicant may still petition for a license under 37 CFR 5.12, if a license is desired before the expiration of 6 months from the filing date of the application. If 6 months has lapsed from the filing date of this application and the licensee has not received any indication of a secrecy order under 35 U.S.C. 181, the licensee may foreign file the application pursuant to 37 CFR 5.15(b).

UNITED STATES PATENT AND TRADEMARK OFFICE

Commissioner for Patents
United States Patent and Trademark Office
P.O. Box 1450
Alexandria, VA 22313-1450
www.uspto.gov

APPLICATION NUMBER	FILING/RECEIPT DATE	FIRST NAMED APPLICANT	ATTORNEY DOCKET NUMBER
60/822,660		Richard Monetti	388700-505

INSKEEP INTELLECTUAL PROPERTY GROUP, INC
2281 W. 190TH STREET
SUITE 200
TORRANCE CA 90504

DATE MAILED: August 22, 2006

DECISION DISMISSING PETITION UNDER 37 CFR 1.138(d)
The declaration of express abandonment will not be recognized

This is in response to the petition under 37 CFR 1.138(d) filed on August 18, 2006, requesting for a refund of any previously paid search fee and excess claims fee in the above-identified application.

The petition is dismissed.

The express abandonment will **not** be recognized for the reason(s) indicated below:

~ 1. The petition was not filed in sufficient time to permit the appropriate officials to recognize the abandonment before an examination has been made of the application. See 37 CFR 1.138(d).

~ 2. The application is not an application filed under 35 U.S.C. 111(a) on or after December 8, 2004.

~ 3. The petition was not signed by a party authorized by 37 CFR 1.33(b)(1), (3) or (4).

Any inquiries concerning this decision should be directed to the Pre-Grant Publication Division at (703) 605-4283.

Barbara J. Debnam
Pre-Grant Publication Division

UNITED STATES PATENT AND TRADEMARK OFFICE

Commissioner for Patents
United States Patent and Trademark Office
P.O. Box 1450
Alexandria, VA 22313-1450
www.uspto.gov

ASHKAN NAJAFI, P.A.
6817 SOUTHPOINT PARKWAY
SUITE 2301
JACKSONVILLE FL 32216

COPY MAILED

JAN 04 2008

OFFICE OF PETITIONS

In re Application of
Victoria Edema
Application No. 60/822,995
Filed: August 21, 2006
Attorney Dkt. No.: 19298

ON PETITION

This is a decision on the petition under 37 CFR 1.181 to withdraw the holding of abandonment, filed June 4, 2007.

The petition to withdraw the holding of abandonment is **Dismissed**.

Any request for reconsideration should be filed within **TWO MONTHS** of the mailing date of this decision in order to be considered timely. 37 CFR 1.181(f). This time period may not be extended pursuant to 37 CFR 1.136.

This above-identified application became abandoned for failure to file a response to the Notice to File Missing Parts mailed on September 8, 2006. The Notice to File Missing Parts set an extendable two (2) month period for reply. No timely request for extension of time was obtained under the provisions of 37 CFR §1.136(a). Accordingly, this application became abandoned on November 9, 20076 A Notice of Abandonment was mailed on May 17, 2007.

Petitioner contends the holding of abandonment should be withdrawn because petitioner replied to the Notice to File Missing Parts on November 1, 2006. In support petitioner has provided a copy of a transmittal form which contains a certificate of mailing statement pursuant to 37 CFR 1.8. Petitioner has also provided a copy of an Electronic Acknowledgment Receipt.

Petitioner's evidence has been considered but deemed to be unpersuasive. Petitioner

has submitted a copy of the transmittal form and an Electronic Acknowledgment Receipt. A review of the transmittal form shows that a certificate of transmission/mailing pursuant to 37 CFR 1.8[1] was provided. The transmittal, form shows that a "2 page amendment in response to Notice Dates 9-8-06 and copy of a Notice dated 9-8-06" were supplied. The box for submission of an amendment or reply is also checked. However, it is noted that there is no indication that the required fees were submitted. Petitioner does not reference the submission of a check, authorization to charge a deposit account or a credit card authorization. It is further noted that neither the fee transmittal form box nor the fee attached boxes have been checked. Thus, the transmittal form fails to establish that the $100.00 filing fee and $25.00 surcharge were submitted on November 1, 2006.

Review of the Electronic Acknowledgment Receipt shows that the receipt is for application no. 60/822,996 for which attorney Najafi is listed as maintaining the correspondence address of record. The Revenue Accounting and Management records show that $100.00 was received for application no. 60,822,996 on August 21, 2006. Thus the Electronic Acknowledgment Receipt does not serve as prima facie evidence that the $100.00 filing fee was received for application no. 60/822,995.

Accordingly, petitioner has failed to establish that a timely reply was submitted in reply to the September 8, 2006 Notice to File Missing Parts.

Petitioner is also reminded subject to section 119(e)(3) of this title, if no such request is made, the provisional application shall be regarded as abandoned 12 months after the filing date of such application and shall not be subject to revival after such 12-month

---

[1]Pursuant to 37 CFR 1.8(b):
In the event that correspondence is considered timely filed by being mailed or transmitted in accordance with paragraph (a) of this section, but not received in the U.S. Patent and Trademark Office after a reasonable amount of time has elapsed from the time of mailing or transmitting of the correspondence, or after the application is held to be abandoned, or after the proceeding is dismissed, terminated, or decided with prejudice, the correspondence will be considered timely if the party who forwarded such correspondence:
(1) Informs the Office of the previous mailing or transmission of the correspondence promptly after becoming aware that the Office has no evidence of receipt of the correspondence;
(2) Supplies an additional copy of the previously mailed or transmitted correspondence and certificate; and
(3) Includes a statement which attests on a personal knowledge basis or to the satisfaction of the Director to the previous timely mailing or transmission. If the correspondence was sent by facsimile transmission, a copy of the sending unit's report confirming transmission may be used to support this statement.
(c) The Office may require additional evidence to determine if the correspondence was timely filed.

period.

Further correspondence with respect to this matter should be addressed as follows:

By mail:	Mail Stop Petition Commissioner for Patents P.O. Box 1450 Alexandria, VA 22313-1450
By facsimile:	(571) 273-8300
By delivery service: (FedEx, UPS, DHL, etc.)	U.S. Patent and Trademark Office Customer Service Window, Randolph Building 401 Dulany Street Alexandria, VA 22314

Telephone inquiries concerning this matter should be directed to the undersigned at (571) 272-3215.

Charlema R. Grant

Charlema R. Grant
Petitions Attorney
Office of Petitions

UNITED STATES PATENT AND TRADEMARK OFFICE

Commissioner for Patents
United States Patent and Trademark Office
P.O. Box 1450
Alexandria, VA 22313-1450
www.uspto.gov

JJGJR.: 12-07

Paper No: __

PROSKAUER ROSE LLP
1001 PENNSYLVANIA AVE, N.W.,
SUITE 400 SOUTH
WASHINGTON DC 20004

COPY MAILED
DEC 28 2007
OFFICE OF PETITIONS

In re Application of
Hao, et al. :
Application No. 60/823,042 : DECISION ON PETITION
Filed: 21 August, 2006 :
Attorney Docket No. 76897-073PR :

This is a decision on the petition filed on 26 October, 2006, and considered under 37 C.F.R. §1.53.

The Office regrets the delay in addressing the matter—the petition was presented to the attorneys in the Office of Petitions only at this writing.

For the reasons set forth below, the petition under 37 C.F.R. §1.53 is **DISMISSED**.

BACKGROUND

The instant application was deposited on 21 August, 2006

On 1 September, 2006, the Office of Initial Patent Examination (OIPE) mailed a Notice of Omitted Items—to wit: "Fig 3, as described in the specification"—thus, the application had been accorded a filing date without that figure.

OIPE indicated that Petitioner might:

- contend via petition that Fig. 3, as described in the specification had been submitted on deposit and so evidence that condition with the proper supporting documentation (i.e., a date stamped receipt card (see: MPEP §503)) along with a copy of the specification; or

- accept the application as filed.

OIPE set a two- (2-) month period for reply.

Petitioner has, in fact, selected for neither of those options.

On 26 October, 2006, Petitioner instead submitted the instant petition, including therewith, *inter alia*, what is averred to be a true copy of Fig. 3 as described in the specification, however, Petitioner contemporaneously averred that substance of the figure was present, but improvidently mislabeled as "Fig. 2," and Petitioner included a copy of the figure mislabeled as "Fig. 2 and a copy of the figure properly labeled as "Fig. 3."

Petitioner encounters two equally fatal problems with the instant petition:

- clearly Petitioner admits that there was, in fact, no Fig. 3 included by Petitioner with/in this application on deposit on 21 August, 2006, and thus any attempt to add a Fig. 3 to the application would be improper unless Petitioner to accepted a new filing date with the submission, which not only is not the relief which Petitioner has sought herein, but would not be proper in any case; because

- the addition of new matter and acceptance of a later filing date, or (what is really Petitioner's intent herein) to attempt to submit a relabeled "Fig. 2" as a "Fig. 3" is, by definition, in either case an attempt to amend a provisional application, however, Petitioner makes that attempt in the face of the explicit bar thereto (see: 37 C.F.R. §1.53(c) and MPEP §506.).

ANALYSIS

A search of the official file reveals that:

- on 21 August, 2006, Petitioner deposited the instant application;

- the Office record reflects that Fig.3, as described in the specification was missing upon deposit;

- there is no the date-stamped receipt card submitted by Petitioner, and, in fact, Petitioner admits that no Fig. 3 was submitted; rather, he explains, the figure that was intended to be Fig.3 was mislabeled as "Fig. 2."

And the resolution that Petitioner seeks is, in essence, to substitute for the mislabeled "Fig. 2" the correctly labeled "Fig. 3."

The process that Petitioner seeks is termed "amendment," and that process is not permitted in the realm of a provisional application.

Petitioner may, if he wishes, file a new provisional application.

Accordingly, the instant petition must be dismissed.

The Notice mailed on 1 September, 2006, was properly sent and will not be disturbed.

CONCLUSION

The petition is **dismissed**; the petition fee will not be refunded because there is no indication as of this writing of error on the part of the Office.

While telephone inquiries regarding this decision may be directed to the undersigned at (571) 272-3214, it is noted that all practice before the Office is in writing (see: 37 C.F.R. §1.2[1]) and the proper authority for action on any matter in this regard are the statutes (35 U.S.C.), regulations (37 C.F.R.) and the commentary on policy (MPEP). Therefore, no telephone discussion may be controlling or considered authority for Petitioner's/Caller's action(s).

John J. Gillon, Jr.
Senior Attorney
Office of Petitions

---

[1] The regulations at 37 C.F.R. §1.2 provide:

§1.2 Business to be transacted in writing.

All business with the Patent and Trademark Office should be transacted in writing. The personal attendance of applicants or their attorneys or agents at the Patent and Trademark Office is unnecessary. The action of the Patent and Trademark Office will be based exclusively on the written record in the Office. No attention will be paid to any alleged oral promise, stipulation, or understanding in relation to which there is disagreement or doubt.

UNITED STATES PATENT AND TRADEMARK OFFICE

Commissioner for Patents
United States Patent and Trademark Office
P.O. Box 1450
Alexandria, VA 22313-1450
www.uspto.gov

RIMROCK MFG.
18544 RIMROCK RD.
HAYDEN ID 83835-9360

COPY MAILED

SEP 2 3 2008

OFFICE OF PETITIONS

In re Application of :
Wright et al. :
Application No. 60/823,737 :
Filed: August 25, 2008 :
Title: ARCHERY EQUIPMENT VIBRATION :
DAMPENER ACCESSORY :

DECISION ON PETITION

This is a decision on the communication filed August 25, 2008, which is being treated as a petition under 37 CFR 1.53(e).

On August 28, 2006, applicants deposited the above-identified application. On August 1, 2008, the Office mailed a Notice of Incomplete Provisional Application, stating that the specification was missing and that the filing date would be the date of receipt of the specification. Additionally, the Notice required a provisional application cover sheet.

On August 25, 2008, applicants submitted a specification, claims, abstract, drawings, a provisional application cover sheet, and a $400.00 petition fee. After a review of the documents submitted on August 25, 2008, the Office has concluded that the application is now complete. Thus, the application will be accorded a filing date of August 25, 2008, the date on which the specification as prescribed by the first paragraph of 35 U.S.C. 112, and drawings required by § 1.81(a) were filed in the Patent and Trademark Office. See 37 CFR 1.53(c). Accordingly, the petition is granted.

The Office notes that the provisional application cover sheet identified the inventors as Stuart D. Wright and Becky Wright. However, only Stuart D. Wright signed the cover sheet. The Office notes that any paper submitted to the Office must be signed by both inventors (i.e. Stuart D. Wright and Becky Wright).

In view of this decision, the $400.00 petition fee is unnecessary and will be refunded in due course.

This matter is being referred to the Office of Patent Application Processing to accord the above-identified provisional application a filing date of **August 25, 2008,** using the papers submitted on that date.

Any inquiries related to this decision should be directed to the undersigned at (571) 272-3211.

C. T. Donnell

Christina Tartera Donnell
Senior Petitions Attorney
Office of Petitions

UNITED STATES PATENT AND TRADEMARK OFFICE

Commissioner for Patents
United States Patent and Trademark Office
P.O. Box 1450
Alexandria, VA 22313-1450
www.uspto.gov

GENERAL INSTRUMENT CORPORATION DBA THE CONNECTED HOME SOLUTIONS BUSINESS OF MOTOROLA, INC.
101 TOURNAMENT DRIVE
HORSHAM PA 19044

COPY MAILED

SEP 21 2007

OFFICE OF PETITIONS

In re Application of	:	
Sprunk, Eric	:	
Application No. 60/823,738	:	ON PETITION
Filed: August 28, 2006	:	
Attorney Docket No. P4000	:	

This is a decision on the petition under 37 C.F.R. § 1.137(b), filed July 13, 2007, to revive the above-identified application.

The petition is **DISMISSED**.

Any request for reconsideration must be submitted within TWO (2) MONTHS from the mail date of this decision. No further petition fee is required for the request. Extensions of time under 37 CFR 1.136(a) are permitted. The reconsideration request should include a cover letter entitled "Renewed Petition under 37 CFR 1.137(b)." This is **not** a final agency action within the meaning of 5 U.S.C. § 704.

The above-identified application became abandoned for failure to reply in a timely manner to the Notice to File Missing Parts of Application (Notice) mailed September 14, 2006. The Notice set a period for reply of two (2) months from the mail date of the Notice. No extensions of time under the provisions of 37 CFR 1.136(a) were timely obtained. Accordingly, the above-identified application became abandoned on November 15, 2006. A Notice of Abandonment was mailed on May 21, 2007.

A grantable petition under 37 CFR 1.137(b) must be accompanied by:
(1) the required reply,[1]
(2) the petition fee,
(3) a statement that the entire delay in filing the required reply from the due date for the reply until the filing of a grantable petition pursuant to 37 CFR 1.137(b) was unintentional, and
(4) a terminal disclaimer and fee if the application was filed on or before June 8, 1995 or if the application is a design application.

Where there is a question as to whether either the abandonment or the delay in filing a petition under 37 CFR 1.137 was unintentional, the Commissioner may require additional information.[2]

---

[1] In a nonprovisional application abandoned for failure to prosecute, the required reply may be met by the filing of a continuing application. In an application or patent, abandoned or lapsed for failure to pay the issue fee or any portion thereof, the required reply must be the payment of the issue fee or any outstanding balance thereof.

[2] See MPEP 711.03(c)(III)(C) and (D).

The instant petition lacks item (1). The Notice mailed on September 14, 2006 required that a provisional application cover sheet, along with a $50.00 surcharge be submitted. Neither has been submitted at this time.

An extension of time under 37 CFR 1.136 must be filed prior to the expiration of the maximum extendable period for reply. See In re Application of S., 8 USPQ2d 1630, 1631 (Comm'r Pats. 1988). Accordingly, since the $2160.00 extension of time fee submitted with the petition on July 13, 2007, was subsequent to the maximum extendable period for reply, this fee is unnecessary and will be credited to petitioner's deposit account as authorized.

Further correspondence with respect to this matter should be addressed as follows:

By mail: Mail Stop PETITIONS
Commissioner for Patents
Post Office Box 1450
Alexandria, VA 22313-1450

By hand: Customer Window located at:

U.S. Patent and Trademark Office
Customer Service Window Randolph Building
401 Dulany Street
Alexandria, VA 22314

By fax: (571) 273-8300
ATTN: Office of Petitions

Any questions concerning this matter may be directed to the undersigned at (571) 272-3206.

Liana Walsh
Petitions Examiner
Office of Petitions

UNITED STATES PATENT AND TRADEMARK OFFICE

Commissioner for Patents
United States Patent and Trademark Office
P.O. Box 1450
Alexandria, VA 22313-1450
www.uspto.gov

COPY MAILED

MAR 0 1 2007

OFFICE OF PETITIONS

PATREA L. PABST
PABST PATENT GROUP LLP
400 COLONY SQUARE, SUITE 1200
1201 PEACHTREE STREET
ATLANTA GA 30361

In re Application of	:	
Vergnaut et al.	:	DECISION GRANTING
Application No. 60/824,054	:	PETITION
Deposited: August 30, 2006	:	
Attorney Docket No. SCI 101	:	

This is a decision on the petition filed January 2, 2007, requesting that the above-identified provisional application be accorded a filing date of August 30, 2006.

The application was deposited on August 30, 2006. However, on December 27, 2006, the Office of Initial Patent Examination (OIPE) mailed a "Notice of Incomplete Provisional Application" advising applicant that the application papers had not been accorded a filing date because the application was deposited without drawings.

In response, on January 2, 2007, the present petition was filed. Petitioner states that drawings are not necessary for an understanding of the claimed subject matter and, therefore, the application should be accorded the September 15, 2006 filing date without any drawings.

As stated in MPEP 601.01(f), it is the practice of the PTO to treat a provisional application that contains at least some disclosure of a process or method as an application for which a drawing is <u>not</u> necessary for an understanding of the invention under 35 USC 113 (first sentence). The same practice has been followed in composition applications. The above application contains at least one composition claim.

A review of the record shows that there is at least one method/composition claim.

Since the petition contains a statement that drawings are not necessary for an understanding of the invention and the petition is signed by a registered practitioner, on petition, the application will be accorded the requested filing date without any drawings.

The petition is granted. Deposit account no. 50-3129 will be credited the $400.00.

The application will be processed with only the papers present on filing and is hereby accorded a filing date of **August 30, 2006**, without drawings as part of the original disclosure

Telephone inquiries related to this decision may be directed to the undersigned at (571) 272-3215.

Charlema R. Grant

Charlema R. Grant
Petition Attorney
Office of Petitions

UNITED STATES PATENT AND TRADEMARK OFFICE

COMMISSIONER FOR PATENTS
UNITED STATES PATENT AND TRADEMARK OFFICE
P.O. BOX 1450
ALEXANDRIA, VA 22313-1450
www.uspto.gov

Paper No.

TEXAS INSTRUMENTS
INCORPORATED
P O BOX 655474, M/S 3999
DALLAS TX 75265

COPY MAILED

JAN 18 2007

OFFICE OF PETITIONS

In re Application of :
Chang et al. :
Application No. 60/824,356 : DECISION ON PETITION
Filed: September 1, 2006 :
Attorney Docket No.TI-63271PS1:

This is a decision on "PETITION FOR AWARD OF FILING DATE AND REFUND OF PETITION FEE" filed November 13, 2006, requesting that the Office accord the above-identified provisional application a filing date of September 1, 2006.

Application papers in the above-identified application were deposited on September 1, 2006. However, on October 30, 2006, the Initial Patent Examination Division mailed applicants a "Notice of Incomplete Provisional Application." Applicants were notified that the application papers had not been accorded a filing date because the application was deposited without drawings.

In reply, applicants timely filed the instant petition, asserting that the last five pages of the Specification filed September 1, 2006 are five figures of drawings, on separate pages. Applicants argue that any failure to properly number the views or sheets of the drawings, improper inclusion of textual matter in the drawings, improper inclusion of the drawings within the specification, or the like, relates only to matters of formality which may be objectionable and subject to requirement for correction, but does not constitute grounds for denying the filing date.

It is obvious from the petition that drawings were present in the application on September 1, 2006. The drawing sheets were not labelled as Fig.1 - 5, included textual matter and were within the specification as a result of applicants' filing error.

Accordingly, the petition is GRANTED to the extent that the application is entitled to a filing date of September 1, 2006.

The petition fee is required, since the petition was necessary due to the condition of the application on filing.

This application is being forwarded to the Office of Initial Patent Examination for correction of the filing date to September 1, 2006, using the drawings received on that date and for indication in Office records that 5 sheets of drawings were present on filing.

Telephone inquiries related to this decision should be directed to the undersigned at 571-272-3219.

Nancy Johnson
Senior Petitions Attorney
Office of Petitions

UNITED STATES PATENT AND TRADEMARK OFFICE

COMMISSIONER FOR PATENTS
UNITED STATES PATENT AND TRADEMARK OFFICE
P.O. BOX 1450
ALEXANDRIA, VA 22313-1450
WWW.USPTO.GOV

Paper No. None

TEXAS INSTRUMENTS INCORPORATED
P O BOX 655474, M/S 3999
DALLAS TX 75265

COPY MAILED
FEB 21 2007
OFFICE OF PETITIONS

In re Application of :
Shereef Shehata et al. :
Application No. 60/824,372 : DECISION ON PETITION
Filed: September 1, 2006 :
Attorney Docket No.: :
TI-63276PS :
Title: VIDEO COLOR PROCESSOR IN :
THE COLOR APPEARANCE MODEL :
SPACE CIECAM02 :

This is a decision on the petition filed November 13, 2006, requesting that the above-identified application, including a plurality of drawings, be accorded a filing date of September 1, 2006, as part of the original disclosure.

The application was deposited on September 1, 2006. However, on October 31, 2006, the Office of Initial Patent Examination (OIPE) mailed a "Notice of Incomplete Provisional Application" (notice), stating that the application had not been accorded a filing date, and advising applicants that a filing date would be accorded upon the deposit of drawings.

In response, on November 13, 2006, applicants filed the present petition along with the petition fee. Petitioner alleges that drawings were submitted on filing, albeit both unlabelled and embedded within the text of the specification.

The application exists as an electronic image file, and the electronic file has been reviewed. It is clear that drawings were present on filing, and appear on pages two through six of the electronic file, and also embedded within the text of pages eighteen through twenty-one, twenty-six through twenty-seven,

thirty, thirty-three, thirty-five through thirty-seven, and thirty-nine through forty.

Since the application included at least one drawing, the application was complete on filing and entitled to a filing date of September 1, 2006 as part of the original disclosure.

Accordingly, the petition is **GRANTED**.

The notice mailed October 31, 2006 was sent in error, and is hereby **VACATED**. Therefore, no petition fee is necessary, and the petition fee will be refunded to the Deposit Account of Petitioner's representative in due course.

OIPE will process the application with a filing date of September 1, 2006, using the original application papers filed on that date, including the drawings on pages two through six of the electronic file, and also embedded within the text of pages eighteen through twenty-one, twenty-six through twenty-seven, thirty, thirty-three, thirty-five through thirty-seven, and thirty-nine through forty. OIPE will mail a Notice to File Corrected Application Papers requiring replacement drawings in compliance with 37 C.F.R. §§1.84 and 1.121(d). It is noted, for example, that the drawings contain excessive text and are not labeled. Any such amendment will have to be reviewed by the Examiner for new matter[1].

The general phone number for the Office of Petitions which should be used for status requests is (571) 272-3282. Telephone inquiries regarding this decision should be directed to the undersigned at (571) 272-3225.

Paul Shanoski
Senior Attorney
Office of Petitions
United States Patent and Trademark Office

1 See MPEP 608.02(h) and 608.04.

UNITED STATES PATENT AND TRADEMARK OFFICE

Commissioner for Patents
United States Patent and Trademark Office
P.O. Box 1450
Alexandria, VA 22313-1450
www.uspto.gov

LEWIS AND ROCA LLP
40 N. CENTRAL AVENUE
SUITE 1900
PHOENIX AZ 85004-4429

COPY MAILED

SEP 1 8 2007

OFFICE OF PETITIONS

In re Application of

FORDYCE, Edward W. III
Application No. 60/824,426
Filed: September 01, 2006
Attorney Docket No. **P00968PRV2 46763-00251**

DECISION ON PETITION
TO WITHDRAW
FROM RECORD

This is a decision on the Request to Withdraw as attorney or agent of record under 37 C.F.R. § 1.36(b), filed August 15, 2007.

The request is **NOT APPROVED**.

A grantable request to withdraw as attorney/agent of record must be signed by every attorney/agent seeking to withdraw or contain a clear indication that one attorney is signing on behalf of another/others. A request to withdraw will not be approved unless at least 30 (thirty) days would remain between the date of approval and the later of the expiration date of a time to file a response or the expiration date of the maximum time period which can be extended under 37 C.F.R. § 1.136(a).

The Office cannot approve the request at this time since the reasons provided do not meet any of the conditions under the mandatory or permissive categories enumerated in 37 CFR 10.40. Section 10.40 of Title 37 of the Code of Federal Regulation states, "[a] practitioner shall not withdraw from employment in a proceeding before the Office without permission from the Office[.]" More specifically, 37 CFR 10.40 states, "[i]f paragraph (b) of this section is not applicable, a practitioner may not request permission to withdraw in matter pending before the Office unless such request or such withdrawal is" for one the permissive reasons listed in 37 CFR 10.40(c). The reasons set forth in the request, patent application has been transferred to new attorney, does not meet any of the conditions set forth in 37 CFR 10.40.

All future communications from the Office will continue to be directed to the above-listed address until otherwise notified by applicant.

Telephone inquiries concerning this decision should be directed to Tredelle Jackson at 571-272- 2783.

Monica A. Graves
Petitions Examiner
Office of Petitions

cc: **BRAD DESANDRO**
QUARLES AND BRADY LLP
TWO N. CENTRAL AVENUE
ONE RENAISSANCE SQUARE
PHOENIX, AZ 85004-2391

UNITED STATES PATENT AND TRADEMARK OFFICE

Commissioner for Patents
United States Patent and Trademark Office
P.O. Box 1450
Alexandria, VA 22313-1450
www.uspto.gov

ROBERT D. FISH
RUTAN & TUCKER LLP
611 ANTON BLVD 14TH FLOOR
COSTA MESA CA 92626-1931

COPY MAILED

APR 16 2007

OFFICE OF PETITIONS

In re Application of
Lander
Application No. 60/824,651
Deposited: September 6,2006
Attorney Docket No. 101304.0002PRO3
Title of Invention: Hoof Boot

DECISION GRANTING PETITION

This is a decision on the petition filed October 12, 2006, requesting that the above-identified provisional application be accorded a filing date of September 6, 2006.

The application was deposited on September 6, 2006. However, on September 20, 2006, the Office of Initial Patent Examination (OIPE) mailed a "Notice of Incomplete Provisional Application" advising applicants that the application papers had not been accorded a filing date because the application was deposited without a specification.

In response, on October 12 2006, the present petition was filed. Petitioner states that the drawings are sufficient to satisfy the embodiment of the invention.

Since the petition contains a statement that the drawings provided meet the requirements of the first paragraph of 35 USC 112 and the petition is signed by a registered practitioner the application will be accorded the requested filing date.[1]

The petition is granted.

The petition fee will not be refunded because the petition was not necessitated by Office error.

---

[1]It is also noted the drawings contain some text.

The application will be processed with only the papers present on filing and is hereby accorded a filing date of **September 6, 2006**.

The application is being returned to the Office of Initial Patent Examination for further processing.

Telephone inquiries related to this decision may be directed to the undersigned at (571) 272-3215.

Charlema R. Grant

Charlema R. Grant
Petition Attorney
Office of Petitions

UNITED STATES PATENT AND TRADEMARK OFFICE

UNITED STATES DEPARTMENT OF COMMERCE
United States Patent and Trademark Office
Address: COMMISSIONER FOR PATENTS
P.O. Box 1450
Alexandria, Virginia 22313-1450
www.uspto.gov

APPL NO.	FILING OR 371(c) DATE	ART UNIT	FIL FEE REC'D	ATTY.DOCKET NO	TOT CLMS	IND CLMS
60/824,795	09/07/2006		200	681954-381US P62950020		

CONFIRMATION NO. 8449

CORRECTED FILING RECEIPT

OC000000026235233

570
AKIN GUMP STRAUSS HAUER & FELD L.L.P.
ONE COMMERCE SQUARE
2005 MARKET STREET, SUITE 2200
PHILADELPHIA, PA 19103

Date Mailed: 10/11/2007

Receipt is acknowledged of this provisional patent application. It will not be examined for patentability and will become abandoned not later than twelve months after its filing date. Any correspondence concerning the application must include the following identification information: the U.S. APPLICATION NUMBER, FILING DATE, NAME OF APPLICANT, and TITLE OF INVENTION. Fees transmitted by check or draft are subject to collection. Please verify the accuracy of the data presented on this receipt. **If an error is noted on this Filing Receipt, please write to the Office of Initial Patent Examination's Filing Receipt Corrections. Please provide a copy of this Filing Receipt with the changes noted thereon. If you received a "Notice to File Missing Parts" for this application, please submit any corrections to this Filing Receipt with your reply to the Notice. When the USPTO processes the reply to the Notice, the USPTO will generate another Filing Receipt incorporating the requested corrections (if appropriate).**

Applicant(s)

Shih-Hung Chen, Sindian City, TAIWAN;
Ming-Dou Ker, Hsinchu City, TAIWAN;

Power of Attorney: The patent practitioners associated with Customer Number **00570**.

If Required, Foreign Filing License Granted: 09/21/2006

The country code and number of your priority application, to be used for filing abroad under the Paris Convention, is US60/824,795

Projected Publication Date: None, application is not eligible for pre-grant publication

Non-Publication Request: Not applicable

Early-Publication Request: Not applicable

Title

CDM ESD Protection Circuit Using Self-Biased Current Trigger Technique and Pumping Source Mechanism

PROTECTING YOUR INVENTION OUTSIDE THE UNITED STATES

Since the rights granted by a U.S. patent extend only throughout the territory of the United States and have no effect in a foreign country, an inventor who wishes patent protection in another country must apply for a patent in a specific country or in regional patent offices. Applicants may wish to consider the filing of an international application under the Patent Cooperation Treaty (PCT). An international (PCT) application generally has the same effect as a regular national patent application in each PCT-member country. The PCT process **simplifies** the filing of patent applications on the same invention in member countries, but **does not result** in a grant of "an international patent" and does not eliminate the need of applicants to file additional documents and fees in countries where patent protection is desired.

Almost every country has its own patent law, and a person desiring a patent in a particular country must make an application for patent in that country in accordance with its particular laws. Since the laws of many countries differ in various respects from the patent law of the United States, applicants are advised to seek guidance from specific foreign countries to ensure that patent rights are not lost prematurely.

Applicants also are advised that in the case of inventions made in the United States, the Director of the USPTO must issue a license before applicants can apply for a patent in a foreign country. The filing of a U.S. patent application serves as a request for a foreign filing license. The application's filing receipt contains further information and guidance as to the status of applicant's license for foreign filing.

Applicants may wish to consult the USPTO booklet, "General Information Concerning Patents" (specifically, the section entitled "Treaties and Foreign Patents") for more information on timeframes and deadlines for filing foreign patent applications. The guide is available either by contacting the USPTO Contact Center at 800-786-9199, or it can be viewed on the USPTO website at http://www.uspto.gov/web/offices/pac/doc/general/index.html.

For information on preventing theft of your intellectual property (patents, trademarks and copyrights), you may wish to consult the U.S. Government website, http://www.stopfakes.gov. Part of a Department of Commerce initiative, this website includes self-help "toolkits" giving innovators guidance on how to protect intellectual property in specific countries such as China, Korea and Mexico. For questions regarding patent enforcement issues, applicants may call the U.S. Government hotline at 1-866-999-HALT (1-866-999-4158).

LICENSE FOR FOREIGN FILING UNDER
Title 35, United States Code, Section 184
Title 37, Code of Federal Regulations, 5.11 & 5.15

GRANTED

The applicant has been granted a license under 35 U.S.C. 184, if the phrase "IF REQUIRED, FOREIGN FILING LICENSE GRANTED" followed by a date appears on this form. Such licenses are issued in all applications where the conditions for issuance of a license have been met, regardless of whether or not a license may be required as set forth in 37 CFR 5.15. The scope and limitations of this license are set forth in 37 CFR 5.15(a) unless an earlier license has been issued under 37 CFR 5.15(b). The license is subject to revocation upon written notification. The date indicated is the effective date of the license, unless an earlier license of similar scope has been granted under 37 CFR 5.13 or 5.14.

This license is to be retained by the licensee and may be used at any time on or after the effective date thereof unless it is revoked. This license is automatically transferred to any related applications(s) filed under 37 CFR 1.53(d). This license is not retroactive.

The grant of a license does not in any way lessen the responsibility of a licensee for the security of the subject matter as imposed by any Government contract or the provisions of existing laws relating to espionage and the national security or the export of technical data. Licensees should apprise themselves of current regulations especially with respect to certain countries, of other agencies, particularly the Office of Defense Trade Controls, Department of State (with respect to Arms, Munitions and Implements of War (22 CFR 121-128)); the Bureau of

Industry and Security, Department of Commerce (15 CFR parts 730-774); the Office of Foreign Assets Control, Department of Treasury (31 CFR Parts 500+) and the Department of Energy.

NOT GRANTED

No license under 35 U.S.C. 184 has been granted at this time, if the phrase "IF REQUIRED, FOREIGN FILING LICENSE GRANTED" DOES NOT appear on this form. Applicant may still petition for a license under 37 CFR 5.12, if a license is desired before the expiration of 6 months from the filing date of the application. If 6 months has lapsed from the filing date of this application and the licensee has not received any indication of a secrecy order under 35 U.S.C. 181, the licensee may foreign file the application pursuant to 37 CFR 5.15(b).

UNITED STATES PATENT AND TRADEMARK OFFICE

Commissioner for Patents
United States Patent and Trademark Office
P.O. Box 1450
Alexandria, VA 22313-1450
www.uspto.gov

JAMES H. SELLERS, JR.
1357 TIMBERLAND DRIVE
MARIETTA GA 30067

COPY MAILED

MAY 1 0 2007

OFFICE OF PETITIONS

In re Application of	:	
James H. Sellers, Jr.	:	
Application No. 60/825,450	:	DECISION ON PETITION
Filed: September 13, 2006	:	
For: PFOETRY FRAME AND METHOD OF PROCESS	:	

This is a decision on the request filed September 25, 2006, which is being treated as a petition under 37 CFR 1.181 (no fee), requesting refund of the filing fee for the above-identified application.

The petition is **GRANTED**.

Petitioner states that the instant application was an unintended duplicate filing via EFS-Web.

37 CFR 1.26(a) states, in part: "The Director may refund any fee paid by mistake or in excess of that required. A change of purpose after the payment of a fee, such as when a party desires to withdraw a patent filing for which the fee was paid, including an application, an appeal, or a request for an oral hearing, will not entitle a party to a refund of such fee."

However, the Office may find a mistake pursuant to 37 CFR 1.26, waive the presumption in 37 CFR 1.26 that applications are not entitled to filing fee refunds, and refund the filing fees associated with unintended duplicate application filings via EFS-Web.

The Office has accepted petitioner's statement as an assertion that the duplicate application was filed by mistake. Accordingly, the filing fee of $100, submitted on September 13, 2006, will be credited to petitioner's credit card as requested.

As no further action will be taken in this application, the request for refund of the filing fee is also being construed as a request to expressly abandon the above-mentioned application. Accordingly, this matter is being referred to the Office of Patent Publication for express abandonment of the subject application.

Telephone inquiries concerning this decision should be directed to the undersigned at (571) 272-3208.

Karen Creasy

Karen Creasy
Petitions Examiner
Office of Petitions

UNITED STATES PATENT AND TRADEMARK OFFICE

Commissioner for Patents
United States Patent and Trademark Office
P.O. Box 1450
Alexandria, VA 22313-1450
www.uspto.gov

Townsend and Townsend and Crew, LLP
Two Embarcadero Center
Eighth Floor
San Francisco, CA 94111-3834

COPY MAILED

AUG 2 0 2007

OFFICE OF PETITIONS

In re Application of	:	
Simon Eric Miani Barber	:	
Application No. 60/826,212	:	DECISION ON PETITION
Filed: September 19, 2006	:	TO WITHDRAW
Attorney Docket No. 021380-001100US	:	FROM RECORD
	:	

This is a decision on the Request to Withdraw as attorney or agent of record under 37 C.F.R. § 1.36(b), filed April 10, 2007.

The request is **APPROVED**.

A grantable request to withdraw as attorney/agent of record must be signed by every attorney/agent seeking to withdraw or contain a clear indication that one attorney is signing on behalf of another/others. A request to withdraw will not be approved unless at least 30 (thirty) days would remain between the date of approval and the later of the expiration date of a time to file a response or the expiration date of the maximum time period which can be extended under 37 C.F.R. § 1.136(a).

The request was signed by Philip H. Albert on behalf of all attorneys of record. All attorneys/agents have been withdrawn. Applicant is reminded that there is no attorney of record at this time.

The request to change the correspondence of record is not acceptable as the requested correspondence address is not that of: (1) the first named signing inventor; or (2) an intervening assignee of the entire interest under 37 C.F.R 3.71. All future communications from the Office will be directed to the first named signing inventor at the first copied address below until otherwise properly notified by the applicant.

There is no outstanding Office action at this time.

The Revocation and Power of Attorney filed June 18, 2007 has not been accepted because a proper 37 CFR 3.73(b) was not filed.

Telephone inquiries concerning this decision should be directed to Terri Williams at 571-272-2991.

T. Williams

Terri Williams
Petitions Examiner
Office of Petitions

cc: **Simon Eric Miani Barber**
517 Mississippi Street
San Francisco, CA 94107

cc: **Daniel Kloke**
Carr & Ferrell
2200 Geng Road
Palo Alto, CA 94303

UNITED STATES PATENT AND TRADEMARK OFFICE

UNITED STATES DEPARTMENT OF COMMERCE
United States Patent and Trademark Office
Address: COMMISSIONER FOR PATENTS
P.O. Box 1450
Alexandria, Virginia 22313-1450
www.uspto.gov

APPLICATION NUMBER	FILING OR 371 (c) DATE	FIRST NAMED APPLICANT	ATTY. DOCKET NO./TITLE
60/826,212	09/19/2006	Simon Eric Miani Barber	021380-001100US

CONFIRMATION NO. 4256

OC000000025452596

20350
TOWNSEND AND TOWNSEND AND CREW, LLP
TWO EMBARCADERO CENTER
EIGHTH FLOOR
SAN FRANCISCO, CA 94111-3834

Date Mailed: 08/20/2007

NOTICE REGARDING CHANGE OF POWER OF ATTORNEY

This is in response to the Power of Attorney filed 04/10/2007.

- The withdrawal as attorney in this application has been accepted. Future correspondence will be mailed to the new address of record. 37 CFR 1.33.

Jeffi Williams

Office of Initial Patent Examination (571) 272-4000, or 1-800-PTO-9199

FORMER ATTORNEY/AGENT COPY

UNITED STATES PATENT AND TRADEMARK OFFICE

Commissioner for Patents
United States Patent and Trademark Office
P.O. Box 1450
Alexandria, VA 22313-1450
www.uspto.gov

BROUSE MCDOWELL LPA
388 SOUTH MAIN STREET
SUITE 500
AKRON OH 44311

COPY MAILED

MAY 10 2007

OFFICE OF PETITIONS

In re Application of	:	
James A. Kost et al	:	
Application No. 60/826,447	:	DECISION ON PETITION
Filed: September 21, 2006	:	
Attorney Docket No. 20720.28215	:	

This is a decision on the petition filed November 21, 2006 which is being treated as a petition under under 37 CFR 1.181 (no fee), requesting refund of the filing fee for the above-identified application.

The petition is **GRANTED**.

Petitioner states that the instant application was an unintended duplicate filing via EFS-Web.

37 CFR 1.26(a) states, in part: "The Director may refund any fee paid by mistake or in excess of that required. A change of purpose after the payment of a fee, such as when a party desires to withdraw a patent filing for which the fee was paid, including an application, an appeal, or a request for an oral hearing, will not entitle a party to a refund of such fee."

However, the Office may find a mistake pursuant to 37 CFR 1.26, waive the presumption in 37 CFR 1.26 that applications are not entitled to filing fee refunds, and refund the filing fees associated with unintended duplicate application filings via EFS-Web.

The Office has accepted petitioner's statement as an assertion that the duplicate application was filed by mistake. Accordingly, the filing fee of $200, submitted on September 21, 2006, has been credited to petitioner's deposit account no. 50-1210 as authorized .

As no further action will be taken in this application, the request for refund of the filing fee is also being construed as a request to expressly abandon the above-mentioned application. Accordingly, this matter is being referred to the Office of Patent Publication for express abandonment of the subject application.

Telephone inquiries concerning this decision should be directed to the undersigned at (571) 272-3208.

Karen Creasy

Karen Creasy
Petitions Examiner
Office of Petitions

UNITED STATES PATENT AND TRADEMARK OFFICE

COMMISSIONER FOR PATENTS
UNITED STATES PATENT AND TRADEMARK OFFICE
P.O. BOX 1450
ALEXANDRIA, VA 22313-1450
WWW.USPTO.GOV

Paper No. None

PHILIP S. JOHNSON
JOHNSON & JOHNSON
ONE JOHNSON & JOHNSON PLAZA
NEW BRUNSWICK NJ 08933-7003

COPY MAILED

FEB 16 2007

OFFICE OF PETITIONS

In re Application of :
Min A. Xiang :
Application No. 60/826,671 :
Filed: September 22, 2006 :
Attorney Docket No. PRD2726USPSP :
Title: SUBSTITUTED :
SPIROHETEROCYCLES :

DECISION ON PETITION UNDER 37 C.F.R. §1.53

This is a decision on the petition pursuant to 37 C.F.R. §1.53, filed on October 16, 2006. Petitioner's Representative has requested that the present application be accorded a filing date of September 22, 2006.

On September 22, 2006, the above-identified application was deposited. On October 4, 2006, the Office of Initial Patent Examination (OIPE) mailed a "Notice of Incomplete Provisional Application - Filing Date Not Granted (notice)", stating that the application had not been accorded a filing date, and advising applicants that a filing date would be accorded upon the receipt of a specification. The Notice set a two-month period for response.

On October 16, 2006, Petitioner's Representative submitted the present petition under 37 C.F.R. §1.53. The petition is further accompanied by a copy of an electronic Acknowledgement Receipt, which indicates that a seventy-eight page file entitled "2726spec.PDF" was received in the Office on September 22, 2006. Applicant requests that the application, including this document, be accorded a filing date of September 22, 2006.

The evidence is convincing that on September 22, 2006, a seventy-eight page document was submitted via EFS-Web that included a specification.

Therefore, the application, including a specification, was complete on September 22, 2006, and entitled to a filing date of September 22, 2006.

Accordingly, the petition is **GRANTED**.

The notice mailed October 4, 2006, was sent in error, and is hereby **VACATED**. Therefore, no petition fee is necessary. The petition fee has not been charged to the Deposit Account of Petitioner's Representative.

OIPE will be notified of this decision so that this application may receive further processing with a filing date of September 22, 2006, using the original application papers filed on that date, as well as the contents of file 2726spec.PDF which has been located, and for noting in Office records that the specification was present on September 22, 2006.

Telephone inquiries regarding *this decision* should be directed to the undersigned at (571) 272-3225[1]. All other inquiries concerning examination procedures or status of the application should be directed to the Technology Center.

Paul Shanoski
Senior Attorney
Office of Petitions
United States Patent and Trademark Office

1 Petitioner's Representative will note that all practice before the Office should be in writing, and the action of the Office will be based exclusively on the written record in the Office. See 37 C.F.R. §1.2. As such, Petitioner's Representative is reminded that no telephone discussion may be controlling or considered authority for any further action(s) of Petitioner's Representative.

UNITED STATES PATENT AND TRADEMARK OFFICE

COMMISSIONER FOR PATENTS
UNITED STATES PATENT AND TRADEMARK OFFICE
P.O. BOX 1450
ALEXANDRIA, VA 22313-1450
www.uspto.gov

FLIESLER MEYER LLP
650 CALIFORNIA STREET
14TH FLOOR
SAN FRANCISCO, CA 94108

COPY MAILED

JUL 13 2007

OFFICE OF PETITIONS

In re Application of
Adam Bosworth, et al.
Application No. 60/826,691
Filed: September 22, 2006
Attorney Docket No. BEAS-01537US8

DECISION ON PETITION

This is a decision on the petition filed November 15, 2006, which is being treated under 37 CFR 1.53(e)(2), requesting that the above-identified application be accorded a filing date of September 22, 2006.

The petition is **GRANTED**.

The application was deposited on September 22, 2006. However, on October 10, 2006, Initial Patent Examination Division mailed a Notice stating that a filing date had not been accorded to the application papers since the application was deposited without drawings.

In response, on November 15, 2006, the present petition and requisite petition fee were filed. Petitioner argues that drawings were included with the application papers deposited on September 22, 2006. Petitioner explains the drawings are included as part of the main text. Accordingly, petitioner requests that the application be accorded a filing date.

A review of the application confirms that drawings were included in the text of the application. This was not the proper form. A provisional application should preferably conform to the arrangement guidelines for nonprovisional applications (for example, should include a Brief description of the several views of the drawing. (See MPEP § 608.01(f)). As amendments, other than those required to make the provisional application comply with applicable regulations, are not permitted after the filing date of the provisional application, the application will be accepted as filed.

The "Notice Of Incomplete Provisional Application, was correct in stating that drawings appeared to have been omitted. The "Notice" was properly mailed and will not be withdrawn.

Since the present petition was not necessitated by any error on the part of the Office, the $400.00 petition fee will **not** be refunded.

The application is being returned to Initial Patent Examination Division for further processing with a filing date of September 22, 2006, using the application papers filed on that date.

It is noted that the address given on the petition differs from the address of record. If appropriate, a change of address should be filed in accordance with MPEP 601.03. A courtesy copy of this decision is being mailed to the address given on the petition; however, the Office will mail all future correspondence solely to the address of record.

Telephone inquires related to this decision should be directed to the undersigned at (571) 272-3204. Telephone inquiries related to Initial Patent Examination Division processing should be directed to their hotline at (571) 272-4000.

Sherry D. Brinkley
Petitions Examiner
Office of Petitions

cc: FLIESLER MEYER LLP
FOUR EMBARCADERO CENTER, SUITE 400
SAN FRANCISCO, CA 94111-4156

UNITED STATES PATENT AND TRADEMARK OFFICE

COMMISSIONER FOR PATENTS
UNITED STATES PATENT AND TRADEMARK OFFICE
P.O. BOX 1450
ALEXANDRIA, VA 22313-1450
www.uspto.gov

Paper No.

QUALCOMM INCORPORATED
5775 MOREHOUSE DR.
SAN DIEGO CA 92121

COPY MAILED
DEC 17 2007
OFFICE OF PETITIONS

In re Application of :
Dorbie et al. : DECISION ON PETITION
Application No. 60/826,908 :
Filed: September 26, 2006 :
Attorney Docket No. 060977P1 :

This is in response to the CORRECTIVE PETITION FOR REVIVAL OF AN APPLICATION FOR PATENT ABANDONED UNINTENTIONALLY UNDER 37 CFR 1.137(b) filed July 11, 2007. This petition corrects the Petition filed July 6, 2007, by including the correct application number on the petition.

The above-identified provisional application became abandoned for failure to respond to the Notice to File Missing Parts of Provisional Application mailed October 13, 2006. The Notice set a two-month time limit for applicant to file a cover sheet under 37 CFR 1.51(c)(1) identifying either city and state or city and foreign country of the residence of each inventor. No response was filed and no extension of time obtained. Accordingly, the above-identified application became abandoned on December 14, 2006[1]. The instant petition filing precedes the mailing of a courtesy Notice of Abandonment.

Within one year of the abandonment, applicants filed the instant petition. Accompanying the petition was the required reply in the form of an ADS signed by an attorney of record and payment of the $50 surcharge, and payment of the petition fee. The petition includes a statement that this application became abandoned unintentionally. The statement of unintentional delay

[1] As no four month extension of time was filed within the period for filing such an extension, petitioner is incorrect when she states that the application became abandoned on April 13, 2007.

varies from the required language in 37 CFR § 1.137(b). Applicant's statement is being construed as the statement required by 37 CFR § 1.137(b). If this is not a correct reading of the statement appearing in the petition, petitioner must promptly notify the Office. No terminal disclaimer is required.

Petitioner is reminded that as stated in 37 CFR 1.137(g), a provisional application, abandoned for failure to timely respond to an Office requirement, may be revived pursuant to this section. However, subject to the provisions of 35 U.S.C. 119(e)(3) and § 1.7(b), a provisional application will not be regarded as pending after twelve months from its filing date under any circumstances. In other words, a provisional application may be abandoned prior to 12 months from its filing date for failure to reply to an Office requirement (e.g., failure to submit the filing fee and/or cover sheet). Applicant may petition to have an abandoned provisional application revived as a pending provisional application for a period of no longer than 12 months from the filing date of the provisional application where the delay was unavoidable or unintentional.

The Office of Patent Application Processing has been advised of this decision. The application is thereby forwarded for processing of the response, the ADS, filed on petition filed July 11, 2007.

Telephone inquiries related to this decision should be directed to the undersigned at (571) 272-3219.

Nancy Johnson
Senior Petitions Attorney
Office of Petitions

UNITED STATES PATENT AND TRADEMARK OFFICE

Commissioner for Patents
United States Patent and Trademark Office
P.O. Box 1450
Alexandria, VA 22313-1450
www.uspto.gov

COPY MAILED

MAY 15 2007

OFFICE OF PETITIONS

SHIYU WANG
1055 MANGROVE LN
ALAMEDA CA 94502

In re Application of	:	
Shiyu Wang	:	
Application No. 60/827,059	:	DECISION ON PETITION
Filed: September 27, 2006	:	
For: PRE-FIT TEMPORARY IMPLANT	:	
ABUTMENT-CROWN SYSTEM	:	

This is a decision on the request filed October 5, 2006, which is being treated as a petition under 37 CFR 1.181 (no fee), requesting refund of the filing fee for the above-identified application.

The petition is **DISMISSED**.

Petitioner asserts that the instant application was an unintended duplicate filing via EFS-Web.

37 CFR 1.26(a) states, in part: "The Director may refund any fee paid by mistake or in excess of that required. A change of purpose after the payment of a fee, such as when a party desires to withdraw a patent filing for which the fee was paid, including an application, an appeal, or a request for an oral hearing, will not entitle a party to a refund of such fee."

However, the Office may find a mistake pursuant to 37 CFR 1.26, waive the presumption in 37 CFR 1.26 that applications are not entitled to filing fee refunds, and refund the filing fees associated with unintended duplicate application filings via EFS-Web when the following conditions have been met:

(1) Applicant must certify that they had filed the duplicate application(s) prior to receiving appropriate confirmation from the Office that the initial application filing via EFS-Web was received by the Office;

(2) the request for a refund must be filed within three months from the filing date of the first application receiving an appropriate acknowledgement;

(3) the request must include a statement which attests on a personal knowledge basis or to the satisfaction of the Director that the duplicate application was intended to be the original application;

(4) the duplicate application must have been filed via EFS-Web on or after March 16, 2006;

(5) the request must list the other application(s) of which the instant application is deemed to be a "duplicate"; and

(6) the request should include a statement of express abandonment of the instant application as it was filed in error.

When the above conditions have been met, the Office will generally accept the statement as an assertion that the duplicate application was filed by mistake without requiring further information.

The instant petition lacks items (5) and (6) above.

Accordingly, the petition for refund of a duplicate filing fee under 37 CFR 1.181 cannot be granted at this time.

Further correspondence with respect to this matter should be addressed as follows:

By Mail: Mail Stop PETITION
Commissioner for Patents
P. O. Box 1450
Alexandria, VA 22313-1450

By facsimile: **(571) 273-8300**
Attn: Office of Petitions

By hand: U. S. Patent and Trademark Office
Customer Service Window, Mail Stop Petitions
Randolph Building
401 Dulany Street
Alexandria, VA 22314

Telephone inquiries concerning this decision should be directed to the undersigned at (571) 272-3208.

Karen Creasy

Karen Creasy
Petitions Examiner
Office of Petitions

UNITED STATES PATENT AND TRADEMARK OFFICE

Commissioner for Patents
United States Patent and Trademark Office
P.O. Box 1450
Alexandria, VA 22313-1450
www.uspto.gov

DARBY & DARBY P.C.
P. O. BOX 5257
NEW YORK NY 10150-5257

COPY MAILED

MAY 03 2007

OFFICE OF PETITIONS

In re Application of	:	
Kehler et al.	:	
Application No. 60/827,292	:	DECISION GRANTING
Filed: September 28, 2006	:	PETITION
Attorney Docket No. 05432/0205543-US0	:	

This is a decision on the petition filed November 8, 2006, which is being treated under 37 CFR §1.53(e)(2)[1] to accord the above-identified application a filing date of September 28, 2006.

The petition is **GRANTED**.

The application was deposited on September 28, 2006. However, the Office of Initial Patent Examination (OIPE) mailed a "Notice of Incomplete Nonprovisional Application" (Notice) on October 13, 2006, stating that the application was deposited without drawings.

In reply to the Notice, applicant filed the petition stating the drawings referenced in the application are not necessary for the understanding of the subject matter sought to be patented.

Since drawings are not necessary for an understanding of the invention, the application will be accorded a filing date of September 28, 2006.

This matter is being referred to OIPE for further **processing with a filing date of September 28, 2006,** and an indication in the Office records that "0" sheets of drawing were present on filing.

Telephone inquiries concerning this matter may be directed to Petitions Examiner Liana Walsh at (571) 272-3206.

Frances Hicks
Petitions Examiner
Office of Petitions

---

[1] §1.53(e)(2) provides that "Any request for review of a notification pursuant to paragraph (e)(1) of this section, or a notification that the original application papers lack a portion of the specification or drawing(s), must be by way of a petition pursuant to this paragraph. ... In the absence of a timely (§1.181(f)) petition pursuant to this paragraph, the filing date of an application in which the applicant was notified of a filing error pursuant to paragraph (e)(1) of this section will be the date the filing error is corrected."

UNITED STATES PATENT AND TRADEMARK OFFICE

Commissioner for Patents
United States Patent and Trademark Office
P.O. Box 1450
Alexandria, VA 22313-1450
www.uspto.gov
DIW Jan-07

LEXMARK INTERNATIONAL, INC.
INTELLECTUAL PROPERTY LAW DEPARTMENT
740 WEST NEW CIRCLE ROAD
BLDG. 082-1
LEXINGTON KY 40550-0999

COPY MAILED

JAN 23 2007

OFFICE OF PETITIONS

In re Application of	:	
Zhigang Xiao	:	
Application No. 60/827,379	:	DECISION ON PETITION
Filed: 28 September, 2006	:	
Atty Docket No. 2006-0210.03	:	

Receipt is acknowledged of the petition filed on 6 November, 2006, which is treated as a petition to withdraw the Notice of Omitted Items in a Provisional Application mailed on 11 October, 2006.

The petition is **DISMISSED**.

The application was filed on 28 September, 2006. However, on 11 October, 2006, Initial Patent Examination Division mailed a "Notice" stating that the application had been accorded a filing date of 28 September, 2006, and advising applicant that Figure 2 described in the specification appeared to have been omitted.

In response, the present petition was filed on 6 November, 2006. Petitioner explains that Figure 2 was not missing on 28 September, 2006. Instead, states petitioner, Figure 2 is present on the same sheet of drawings which contain Figure 1, but is inadvertently not labeled. Petitioners have supplied with the petition a duplicate copy of the drawing sheet containing Figure 2.

It is obvious from the petition that no drawing was actually missing on 28 September, 2006. Rather, the drawing of Figure 2 was simply unlabeled as a result of the applicant's filing error. However, the "Notice" mailed on 11 October, 2006, was correct in stating that Figure 2 described in the specification appeared to have been omitted. Therefore, the "Notice" was properly mailed and will not be withdrawn.

As the present petition was not necessitated by any error on the part of the Office, the petition fee will not be refunded.

The application will be processed using only the application papers filed on 28 September, 2006. The copies of the drawing sheets supplied with the present petition on 6 November, 2006, will not be used for processing, but will be retained in the application file.

The application is being returned to the Office of Initial Patent Examination for further processing with a filing date of 28 September, 2006, using only the application papers filed on that date.

Telephone inquiries concerning this matter may be directed to the undersigned at (571) 272-3231.

D Wood

Douglas I. Wood
Senior Petitions Attorney
Office of Petitions

UNITED STATES PATENT AND TRADEMARK OFFICE

Commissioner for Patents
United States Patent and Trademark Office
P.O. Box 1450
Alexandria, VA 22313-1450
www.uspto.gov

FENWICK & WEST LLP
SILICON VALLEY CENTER
801 CALIFORNIA STREET
MOUNTAIN VIEW, CA 94041

COPY MAILED

MAR 2 8 2007

OFFICE OF PETITIONS

In re Application of :
Geoffrey R. Hendrey :
Application No.: 60/827,665 :
Filed: NO FILING DATE ACCORDED :
Attorney Docket No. 20662-12074 :

ON PETITION

This a decision on the petition filed January 16, 2007. The petition will be treated under 37 CFR 1.182.

The petition is **dismissed.**

The application was deposited on September 29, 2006. On January 3, 2007, the Initial Patent Examination Division mailed the Notice stating that the application had not been accorded a filing date because drawings were not found with the application papers. The Notice allowed a non-extendable period for reply of two months from its mailing date.

The present petition was filed on January 16, 2007, responsively. Petitioner therein argued that Figure 1 accompanied the original application papers. The petition was not accompanied by evidence to corroborate petitioner's contention that Figure 1 accompanied the original application papers.

The argument has been considered, but is not persuasive. The Patent and Trademark Office (the AOffice) file is the official record of the papers originally filed in this application. A review of the application file reveals no drawings filed on September 29, 2006. An applicant alleging that a paper was filed in the Office and later misplaced has the burden of proving the allegation by a preponderance of the evidence. The fact that petitioner asserts that Figure 1 was among papers originally filed is not more persuasive than the papers shown to have been received by the official file. Further, petitioner did not provide a copy of an itemized Office date-stamped postcard whereby the Office would have acknowledged receiving the drawing and that would serve as *prima facie* evidence that Figure 1 was received on September 29, 2006.

The petition is dismissed.

Petitioner is directed to section 601.01(b) of the *Manual of Patent Examining Procedure* (MPEP) which states, in pertinent part:

> [a] provisional application will be given a filing date in accordance with 37 CFR 1.53(c) as of the date the written description and any necessary drawings are filed in the Office. The filing date requirements for a provisional application sent forth the 37 CFR 1.53(c) parallel the requirements of a nonprovisional application set forth in 37 CFR 1.53(b), except that no claim is required. Amendments, other than those required to make the provisional application comply with applicable regulations, are not permitted after the filing date of the provisional application.

Further, section 601.01(d) of the MPEP provides that:

> . . . in view of the relatively low filing fee for provisional applications, and the USPTO's desire to minimize the processing of provisional application, the USPTO will not grant petition under 37 CFR 1.182 to accept omitted page(s) or drawing(s) and accord an application filing date as of the date of such submission in provisional applications. The applicant should simply file a new completed provisional application.

Accordingly, if petitioner is not able to establish that Figure 1 was present on September 29, 2006, by *prima facie evidence*, i.e., an Office date-stamped postcard, a new completed provisional application must be filed to have the Figure 1 included.

The application is being directed to the Office of Initial Patent Examination for further processing

Telephone inquiries concerning this matter may be directed to the undersigned at (571) 272-3222.

Kenya A. McLaughlin
Petitions Attorney
Office of Petitions

UNITED STATES PATENT AND TRADEMARK OFFICE

Commissioner for Patents
United States Patent and Trademark Office
P.O. Box 1450
Alexandria, VA 22313-1450
www.uspto.gov
DIW Nov-07

COPY MAILED

NOV 26 2007

OFFICE OF PETITIONS

FENWICK & WEST LLP
SILICON VALLEY CENTER
801 CALIFORNIA STREET
MOUNTAIN VIEW, CA 94041

In re Application of :
Geoffrey R. Hendry :
Application No. 60/827,665 : DECISION ON PETITION
Filed: September 29, 2006 :
Atty Docket No. 20662-12074 :

This is a decision on the renewed petition filed on October 1, 2007, under 37 CFR 1.53(e) requesting that the above-identified provisional application be accorded a filing date of September 29, 2006.

The petition under 37 CFR 1.53(e) is **granted.**

The application was deposited on September 29, 2006. On January 3, 2007, the Office of Initial Patent Examination mailed a Notice stating that the application had not been accorded a filing date because drawings were not found with the application papers. The Notice allowed a non-extendable period for reply of two-months from its mailing date.

A petition was first filed on January 16, 2007, and dismissed by a decision mailed March 28, 2007. The instant renewed petition was filed on October 1, 2007. Petitioner maintains that one drawing figure accompanied the original application papers on September 29, 2006, and the application is entitled to a filing date of September 29, 2006, accordingly.

A review of the application file reveals that a figure was incorporated in the specification for the application on page six of the specification. It is noted that the figure was not labeled.

Pursuant to 35 USC 111(b)(1)(A);(B), in order to obtain a filing date, a provisional application must provide the specification required by 35 USC 112 ¶ 1, and a drawing as prescribed by 35 USC 113. 37 CFR 1.53(c)(1) also requires the inclusion of a cover sheet pursuant to 37 CFR 1.51(c)(1), a condition clearly met herein on September 29, 2006, as was the submission of the filing

fee required by 35 USC 41. All conditions for obtaining a filing date in this provisional application were clearly met on September 29, 2006.

Under the facts of this case, this provisional application is entitled, for a filing date, to the date of receipt of the 62 pages of text and figure. There is no explicit requirement that precludes the obtaining of a filing date for a provisional application when the specification and drawings are, as here, not separated. The disclosure will include only those papers filed on September 29, 2006, as a provisional application cannot be amended after filing.

However, as the drawings figure was unlabeled, the petition was necessitated by an error on the part of applicant, and the petition fee will not be refunded. It is noted that the petition was paid twice, so the petition fee paid with the renewed petition will be refunded in due course.

This provisional application is being forwarded to the Office of Patent Application Processing where a filing date of September 29, 2006 will be accorded the application.

Telephone inquiries should be directed to the undersigned at 571-272-3222.

Kenya A. McLaughlin
Petitions Attorney
Office of Petitions

UNITED STATES PATENT AND TRADEMARK OFFICE

Commissioner for Patents
United States Patent and Trademark Office
P.O. Box 1450
Alexandria, VA 22313-1450
www.uspto.gov

Qualcomm Incorporated
5775 Morehouse Drive
San Diego, CA 92121

COPY MAILED

JUN 18 2008

OFFICE OF PETITIONS

In re Application of	:	
Gurvinder Chhabra	:	
Application No. 60/827,678	:	DECISION ON PETITION
Filed: September 29, 2006	:	
Attorney Docket No. 070037P1	:	

This is a decision on the petition under the unintentional provisions of 37 CFR 1.137(b), filed September 27, 2007, to revive the above-identified application.

The petition is **GRANTED**.

The application became abandoned for failure to reply in a timely manner to the Notice to File Missing Parts of Provisional Application (Notice), mailed January 3, 2007. The Notice set a period for reply of two (2) months from the mail date of the Notice. No extensions of time under the provisions of 37 CFR 1.136(a) were obtained. Accordingly the application became abandoned on March 4, 2007. A Notice of Abandonment was mailed on September 12, 2007.

The petition satisfies the requirements of 37 CFR 1.137(b) in that petitioner has supplied (1) the reply in the form of a provisional application cover sheet, and a $50 surcharge fee (2) the petition fee of $1500, and (3) a proper statement of unintentional delay.

It is not apparent whether the person signing the statement of unintentional delay was in a position to have firsthand or direct knowledge of the facts and circumstances of the delay at issue. Nevertheless, such statement is being treated as having been made as the result of a reasonable inquiry into the facts and circumstances of such delay. See 37 CFR 10.18(b) and Changes to Patent Practice and Procedure; Final Rule Notice, 62 Fed. Reg. 53131, 53178 (October 10, 1997), 1203 Off. Gaz. Pat. Office 63, 103 (October 21, 1997). In the event that such an inquiry has not been made, petitioner must make such an inquiry. If such inquiry results in the discovery that it is not correct that the entire delay in filing the required reply from the due date for the reply until the filing of a grantable petition pursuant to 37 CFR 1.137(b) was unintentional, petitioner must notify the Office.

There is no indication that the person signing the instant petition was ever given a power of attorney or authorization of agent to prosecute the above-identified application. However, in accordance with 37 CFR 1.34(a), the signature appearing on the petition shall constitute a representation to the United States Patent and Trademark Office that he/she is authorized to represent the particular party in whose behalf he/she acts.

Telephone inquiries concerning this decision should be directed to Kimberly Inabinet at (571) 272-4618.

Andrea Smith
Petitions Examiner
Office of Petitions

UNITED STATES PATENT AND TRADEMARK OFFICE

Commissioner for Patents
United States Patent and Trademark Office
P.O. Box 1450
Alexandria, VA 22313-1450
www.uspto.gov

HISCOCK & BARCLAY, LLP
2000 HSBC PLAZA
100 Chestnut Street
ROCHESTER, NY 14604-2404

COPY MAILED

MAY 0 9 2008

OFFICE OF PETITIONS

In re Application of

Suresh Sunderrajan

Application No. 60/827,718

Filed: October 1, 2006

Attorney Docket No.

DECISION ON PETITION

This is a decision on the petition under 37 CFR §1.137(b), January 31, 2008, to revive the above-identified application.

The petition is **granted**.

This application became abandoned for failure to respond in a timely manner to the Notice to File Missing Parts of Provisional Application mailed January 16, 2007. The notice set a shortened period for reply of two months from its mailing date. Extensions of time were available pursuant to 37 CFR 1.136(a). No response was received within the allowable period and the application became abandoned in March 17, 2007. A Notice of Abandonment was mailed October 3, 2007.

The Application Data Sheet filed January 31, 2008, is noted.

The surcharge of $25.00 will be charged deposit account 50-3010.

A provisional application may be revived so as to be pending for a period no longer than twelve months from its filing date. See 35 USC 11(b)(5). This application is now expired as a matter of law.

The power of attorney filed January 31, 2008, is noted and made of record.

Telephone inquiries concerning this decision may be directed to the undersigned at (571) 272-3222.

Kenya A. McLaughlin
Petitions Attorney
Office of Petitions

UNITED STATES PATENT AND TRADEMARK OFFICE

Commissioner for Patents
United States Patent and Trademark Office
P.O. Box 1450
Alexandria, VA 22313-1450
www.uspto.gov

BROUSE MCDOWELL LPA
388 SOUTH MAIN STREET
SUITE 500
AKRON OH 44311

COPY MAILED

MAY 10 2007

OFFICE OF PETITIONS

In re Application of	:	
James A. Kost et al	:	
Application No. 60/827,895	:	DECISION ON PETITION
Filed: October 3, 2006	:	
Attorney Docket No. 20720.28215	:	

This is a decision on the petition filed November 21, 2006, whichis being treated as a petition under 37 CFR 1.181 (no fee), requesting refund of the filing fee for the above-identified application.

The petition is **GRANTED**.

Petitioner states that the instant application was an unintended duplicate filing via EFS-Web.

37 CFR 1.26(a) states, in part: "The Director may refund any fee paid by mistake or in excess of that required. A change of purpose after the payment of a fee, such as when a party desires to withdraw a patent filing for which the fee was paid, including an application, an appeal, or a request for an oral hearing, will not entitle a party to a refund of such fee."

However, the Office may find a mistake pursuant to 37 CFR 1.26, waive the presumption in 37 CFR 1.26 that applications are not entitled to filing fee refunds, and refund the filing fees associated with unintended duplicate application filings via EFS-Web.

The Office has accepted petitioner's statement as an assertion that the duplicate application was filed by mistake. Accordingly, the filing fee of $200, submitted on October 3, 2006, has been credited to petitioner's deposit account no. 50-1210 as authorized.

As no further action will be taken in this application, the request for refund of the filing fee is also being construed as a request to expressly abandon the above-mentioned application. Accordingly, this matter is being referred to the Office of Patent Publication for express abandonment of the subject application.

Telephone inquiries concerning this decision should be directed to the undersigned at (571) 272-3208.

Karen Creasy
Petitions Examiner
Office of Petitions

UNITED STATES PATENT AND TRADEMARK OFFICE

Commissioner for Patents
United States Patent and Trademark Office
P.O. Box 1450
Alexandria, VA 22313-1450
www.uspto.gov

PANITCH SCHWARZE BELISARIO & NADEL LLP
ONE COMMERCE SQUARE
2005 MARKET STREET, SUITE 2200
PHILADELPHIA PA 19103

COPY MAILED

MAR 3 1 2008

OFFICE OF PETITIONS

In re Application of	:	
Huang et al.	:	
Application No. 60/828,450	:	DECISION ON PETITION
Filed: October 6, 2006	:	
Attorney Docket No. 681942-36US (HC0012)	:	

This is a decision on the "Request to Correct Inventorship" filed October 5, 2007. This petition is properly treated as a request to change the spelling of the name due to a typographical error.

The petition is **Dismissed** as a petition is not required.

When a typographical or transliteration error in the spelling of an inventor's name is discovered during pendency of an application, a petition is not required, nor is a new oath or declaration under 37 CFR 1.63 needed. However, applicants are strongly encouraged to use an application data sheet. See MPEP 605.04(b). Further review of the record shows the typographical error was discovered during the pendency of the application

Office records have been corrected to reflect the correct spelling of the above-named inventor. A corrected Filing Receipt, which sets forth the correct spelling of the above-named inventor, accompanies this decision on petition.

Any questions concerning this matter may be directed to the undersigned at (571) 272-3215.

The matter is being referred to the Files Repository.

Charlema Grant
Petitions Attorney
Office of Petitions

ATTACHMENT: Corrected Filing Receipt

UNITED STATES PATENT AND TRADEMARK OFFICE

UNITED STATES DEPARTMENT OF COMMERCE
United States Patent and Trademark Office
Address: COMMISSIONER FOR PATENTS
P.O. Box 1450
Alexandria, Virginia 22313-1450
www.uspto.gov

APPLICATION NUMBER	FILING or 371(c) DATE	GRP ART UNIT	FIL FEE REC'D	ATTY.DOCKET.NO	TOT CLAIMS	IND CLAIMS
60/828,450	10/06/2006		100	681942-36US (HC0012)		

CONFIRMATION NO. 3486

CORRECTED FILING RECEIPT

570
PANITCH SCHWARZE BELISARIO & NADEL LLP
ONE COMMERCE SQUARE
2005 MARKET STREET, SUITE 2200
PHILADELPHIA, PA 19103

OC000000029151759

Date Mailed: 03/28/2008

Receipt is acknowledged of this provisional patent application. It will not be examined for patentability and will become abandoned not later than twelve months after its filing date. Any correspondence concerning the application must include the following identification information: the U.S. APPLICATION NUMBER, FILING DATE, NAME OF APPLICANT, and TITLE OF INVENTION. Fees transmitted by check or draft are subject to collection. Please verify the accuracy of the data presented on this receipt. **If an error is noted on this Filing Receipt, please write to the Office of Initial Patent Examination's Filing Receipt Corrections. Please provide a copy of this Filing Receipt with the changes noted thereon. If you received a "Notice to File Missing Parts" for this application, please submit any corrections to this Filing Receipt with your reply to the Notice. When the USPTO processes the reply to the Notice, the USPTO will generate another Filing Receipt incorporating the requested corrections**

Applicant(s)

Wen-Cheng Huang, Taipei, TAIWAN;
Wen-Chun Kuo, Taipei, TAIWAN;
Henrich Cheng, Taipei, TAIWAN;

Power of Attorney: The patent practitioners associated with Customer Number 00570

If Required, Foreign Filing License Granted: 12/28/2006

The country code and number of your priority application, to be used for filing abroad under the Paris Convention, is **US 60/828,450**

Projected Publication Date: None, application is not eligible for pre-grant publication

Non-Publication Request: No

Early Publication Request: No

**** SMALL ENTITY ****

Title

METHOD FOR PROMOTING AXONAL RE-GROWTH AND BEHAVIOR RECOVERY IN SPINAL CORD INJURY

PROTECTING YOUR INVENTION OUTSIDE THE UNITED STATES

Since the rights granted by a U.S. patent extend only throughout the territory of the United States and have no effect in a foreign country, an inventor who wishes patent protection in another country must apply for a patent in a specific country or in regional patent offices. Applicants may wish to consider the filing of an international application under the Patent Cooperation Treaty (PCT). An international (PCT) application generally has the same effect as a regular national patent application in each PCT-member country. The PCT process **simplifies** the filing

of patent applications on the same invention in member countries, but **does not result** in a grant of "an international patent" and does not eliminate the need of applicants to file additional documents and fees in countries where patent protection is desired.

Almost every country has its own patent law, and a person desiring a patent in a particular country must make an application for patent in that country in accordance with its particular laws. Since the laws of many countries differ in various respects from the patent law of the United States, applicants are advised to seek guidance from specific foreign countries to ensure that patent rights are not lost prematurely.

Applicants also are advised that in the case of inventions made in the United States, the Director of the USPTO must issue a license before applicants can apply for a patent in a foreign country. The filing of a U.S. patent application serves as a request for a foreign filing license. The application's filing receipt contains further information and guidance as to the status of applicant's license for foreign filing.

Applicants may wish to consult the USPTO booklet, "General Information Concerning Patents" (specifically, the section entitled "Treaties and Foreign Patents") for more information on timeframes and deadlines for filing foreign patent applications. The guide is available either by contacting the USPTO Contact Center at 800-786-9199, or it can be viewed on the USPTO website at http://www.uspto.gov/web/offices/pac/doc/general/index.html.

For information on preventing theft of your intellectual property (patents, trademarks and copyrights), you may wish to consult the U.S. Government website, http://www.stopfakes.gov. Part of a Department of Commerce initiative, this website includes self-help "toolkits" giving innovators guidance on how to protect intellectual property in specific countries such as China, Korea and Mexico. For questions regarding patent enforcement issues, applicants may call the U.S. Government hotline at 1-866-999-HALT (1-866-999-4158).

LICENSE FOR FOREIGN FILING UNDER

Title 35, United States Code, Section 184

Title 37, Code of Federal Regulations, 5.11 & 5.15

GRANTED

The applicant has been granted a license under 35 U.S.C. 184, if the phrase "IF REQUIRED, FOREIGN FILING LICENSE GRANTED" followed by a date appears on this form. Such licenses are issued in all applications where the conditions for issuance of a license have been met, regardless of whether or not a license may be required as set forth in 37 CFR 5.15. The scope and limitations of this license are set forth in 37 CFR 5.15(a) unless an earlier license has been issued under 37 CFR 5.15(b). The license is subject to revocation upon written notification. The date indicated is the effective date of the license, unless an earlier license of similar scope has been granted under 37 CFR 5.13 or 5.14.

This license is to be retained by the licensee and may be used at any time on or after the effective date thereof unless it is revoked. This license is automatically transferred to any related applications(s) filed under 37 CFR 1.53(d). This license is not retroactive.

The grant of a license does not in any way lessen the responsibility of a licensee for the security of the subject matter as imposed by any Government contract or the provisions of existing laws relating to espionage and the national security or the export of technical data. Licensees should apprise themselves of current regulations especially with respect to certain countries, of other agencies, particularly the Office of Defense Trade Controls, Department of

State (with respect to Arms, Munitions and Implements of War (22 CFR 121-128)); the Bureau of Industry and Security, Department of Commerce (15 CFR parts 730-774); the Office of Foreign AssetsControl, Department of Treasury (31 CFR Parts 500+) and the Department of Energy.

NOT GRANTED

No license under 35 U.S.C. 184 has been granted at this time, if the phrase "IF REQUIRED, FOREIGN FILING LICENSE GRANTED" DOES NOT appear on this form. Applicant may still petition for a license under 37 CFR 5.12, if a license is desired before the expiration of 6 months from the filing date of the application. If 6 months has lapsed from the filing date of this application and the licensee has not received any indication of a secrecy order under 35 U.S.C. 181, the licensee may foreign file the application pursuant to 37 CFR 5.15(b).

UNITED STATES PATENT AND TRADEMARK OFFICE

Commissioner for Patents
United States Patent and Trademark Office
P.O. Box 1450
Alexandria, VA 22313-1450
www.uspto.gov

GLENN PATENT GROUP
3475 EDISON WAY, SUITE L
MENLO PARK CA 94025

COPY MAILED

AUG 1 0 2007

OFFICE OF PETITIONS

In re Application of

GOLDBERG, Netanel et al.
Application No. 60/828,569
Filed: October 06, 2006
Attorney Docket No. **AMIM0010PR**

DECISION ON PETITION
TO WITHDRAW
FROM RECORD

This is a decision on the Request to Withdraw as attorney or agent of record under 37 C.F.R. § 1.36(b), filed June 12, 2007.

The request is **NOT APPROVED**.

A grantable request to withdraw as attorney/agent of record must be signed by every attorney/agent seeking to withdraw or contain a clear indication that one attorney is signing on behalf of another/others. A request to withdraw will not be approved unless at least 30 (thirty) days would remain between the date of approval and the later of the expiration date of a time to file a response or the expiration date of the maximum time period which can be extended under 37 C.F.R. § 1.136(a).

The request cannot be approved because no reasons for withdrawal have been provided. The Office cannot, at this time, determine whether practitioner's request is one of the mandatory or permissive reasons enumerated in 37 CFR 10.40. Any subsequent requests must include reasons for withdrawal. Please note that there is a space provided for on PTO/SB/83 (Request to Withdraw as Attorney or Agent) to supply practitioner's reasons.

All future communications from the Office will continue to be directed to the above-listed address until otherwise notified by applicant.

Telephone inquiries concerning this decision should be directed to Tredelle Jackson at 571-272- 2783.

Monica A. Graves
Petitions Examiner
Office of Petitions

cc: **CHARLES BARBAS**
CESARI AND MCKENNA
BOSTON, MA 02210

UNITED STATES PATENT AND TRADEMARK OFFICE

Commissioner for Patents
United States Patent and Trademark Office
P.O. Box 1450
Alexandria, VA 22313-1450
www.uspto.gov

TREGO, HINES & LADENHEIM, PLLC
9300 HARRIS CORNERS PARKWAY
SUITE 210
CHARLOTTE NC 28269-3797

COPY MAILED

JAN 25 2008

OFFICE OF PETITIONS

In re Application of Jeffrey Jennings Application No.60/828,657 Filed: October 8, 2006 Attorney Docket No. JDJ100806 Title of Invention: Precision Elastomeric Metering Valve	: : : : : : :	DECISION ON PETITION

This is a decision on the petition under 37 CFR §1.137(b), filed July 20, 2007, to revive the above-identified application.

This above-identified application became abandoned for failure to file a response to a Notice to file Missing Parts of a Nonprovisional Application which was mailed on November 6, 2006. The Notice to File Missing Parts set an extendable two (2) month period for reply. No extensions of time were obtained under the provisions of 37 CFR §1.136(a). Accordingly, this application became abandoned on January 7, 2007. A Notice of Abandonment was mailed on July 12, 2007.

The requirements for a grantable petition under 37 CFR §1.137(b) have been met. This petition is hereby **Granted**.

The Office acknowledges receipt of the application data sheet which identifies the inventor's residence for the above-identified application. The Office is also in receipt of the $25.00 surcharge.

Subject to the provisions of 35 U.S.C. 119(e)(3) and § 1.7(b), a provisional application will not be regarded as pending after twelve months from its filing date under any circumstances.

This application is being forwarded to the Office of Patent Application Processing for further processing of the application.

Telephone inquiries concerning this matter should be directed to the undersigned at (571) 272-3215.

Charlema R. Grant

Charlema R. Grant
Petitions Attorney
Office of Petitions

UNITED STATES PATENT AND TRADEMARK OFFICE

Commissioner for Patents
United States Patent and Trademark Office
P.O. Box 1450
Alexandria, VA 22313-1450
www.uspto.gov

DINSMORE & SHOHL LLP
ONE DAYTON CENTRE ONE SOUTH MAIN STREET
SUITE 1300
DAYTON OH 45402-2023

COPY MAILED

APR 0 2 2007

OFFICE OF PETITIONS

In re Application of	:	
Bhatia, et al.	:	
Application No. 60/829,631	:	DECISION ON PETITION
Filed: October 16, 2006	:	
Attorney Docket No. COR 20254 MA	:	

This is a decision on the petition under 37 CFR 1.53, filed January 5, 2007, to accord the above-identified application a filing date of October 16, 2006.

The petition is **GRANTED**.

Application papers in the above-identified application were filed on October 16, 2006. However, on December 22, 2006, the Initial Patent Examination Division mailed Applicants a "Notice of Incomplete Provisional Application." Applicants were notified that the application papers had not been accorded a filing date because the application was deposited without drawings.

It is obvious from reviewing the file that the specification contains a written description interspersed with drawings. Accordingly, the provisional application will be accorded a filing date of October 16, 2006, using the pages of drawings interspersed with specification filed on that date.

Given the basis for granting the petition, the $400 petition fee will be refunded to petitioner under separate cover.

The application is being forwarded to the Office of Initial Patent Examination (OIPE) for further processing with a filing date of October 16, 2006, using the application papers received in the Office on that date (26 pages of specification interspersed with 5 drawing figures).

Telephone inquiries related to this decision should be directed to the undersigned at 571-272-3207.

Cliff Congo
Petitions Attorney
Office of Petitions

UNITED STATES PATENT AND TRADEMARK OFFICE

Commissioner for Patents
United States Patent and Trademark Office
P.O. Box 1450
Alexandria, VA 22313-1450
www.uspto.gov

VAN PELT, YI & JAMES LLP
10050 N. FOOTHILL BLVD #200
CUPERTINO CA 95014

COPY MAILED

JUN 27 2007

OFFICE OF PETITIONS

In re Application of	:	
Tariq et al.	:	
Application No. 60/830,037	:	ON PETITION
Filed: July 11, 2006	:	
Attorney Docket No. RADIP020+	:	

This is a decision on the petition under 37 CFR 1.137(b), filed May 8, 2007, to revive the above-identified application.

The petition is **GRANTED.**

The petition satisfies the conditions for revival pursuant to the provisions of 37 CFR 1.137(b) in that (1) the reply in the form of an Application Data Sheet (ADS) and the surcharge; (2) the petition fee; and (3) the required statement of unintentional delay have been received. Accordingly, the response has been accepted as having been unintentionally delayed.

Petitioner has met the requirements to revive the above-identified application pursuant to 37 CFR 1.137(b). Therefore, the petition is granted and the application is revived.

A provisional application may be revived so as to be pending for a period no longer than 12 months from its filing date. This application is hereby deemed revived until July 11, 2007, when it will go abandoned as a matter of law.

Telephone inquiries regarding this decision should be directed to the undersigned at (571) 272-3206.

Liana Walsh
Petitions Examiner
Office of Petitions

UNITED STATES PATENT AND TRADEMARK OFFICE

Commissioner for Patents
United States Patent and Trademark Office
P.O. Box 1450
Alexandria, VA 22313-1450
www.uspto.gov

THOMTE, MAZOUR & NIEBERGALL, L.L.C.
2120 S. 72ND STREET, SUITE 1111
OMAHA, NE 68124

COPY MAILED
OCT 1 2 2006
OFFICE OF PETITIONS

In re Application of :
Pruch, et al. :
Application No. 60/830,982 :
Filed: July 13, 2006 :
Attorney Docket No. fnbo :

DECISION ON PETITION

This is a decision on the petition under 37 CFR 1.10(d), filed August 11, 2006, to accord the application a filing date of July 13, 2006.

The petition is **granted**.

The record reflects that the subject application arrived at the Patent and Trademark Office in an Express Mail envelope with Express Mail label EV746335852US showing a date-in of July 13, 2006. By the instant petition, the argument is made that the application should have been accorded a filing date of July 13, 2006, as that was date the application was deposited with the United States Postal service (USPS) Express Mail service.

Title 37, Section 1.10(d) of the Code of Federal Regulations reads, in pertinent part:

> Any person filing correspondence under this section that was received by the Office and delivered by the "Express Mail Post Office to Addressee" service of the USPS who can show that the "date-in" on the "Express Mail" mailing label or other official notation entered by the USPS was incorrectly entered or omitted by the USPS, may petition the Commissioner to accord the correspondence a filing date as of the date the correspondence is shown to have been deposited with the USPS, provided that:
>
> (1) The petition is filed promptly after the person becomes aware that the Office has accorded or will accord, a filing date based upon an incorrect entry by USPS;
>
> (2) The number of the "Express Mail" mailing label was placed on the paper(s) or fee(s) that constitute the correspondence prior to the original mailing by "Express Mail"; and
>
> (3) The petition includes a showing which establishes, to the satisfaction of the Commissioner, that the requested filing date was the date the correspondence was deposited in the "Express Mail Post Office to Addressee" service prior to the last scheduled pickup for that day. Any showing pursuant to this paragraph must be corroborated by evidence from the USPS or that came into being after deposit within one business day of the deposit of the correspondence in the "Express Mail Post Office to Addressee" service of the USPS.

All of the above requirements have been met. The application will, therefore, be accorded a filing date of July 13, 2006.

The application file is being forwarded to the Office of Initial Patent Examination where the application will be accorded a filing date of July 13, 2006, and a corrected filing receipt generated.

Telephone injuries regarding this decision should be directed to the undersigned at (571) 272-3222.

Kenya A. McLaughlin
Petitions Attorney
Office of Petitions

UNITED STATES PATENT AND TRADEMARK OFFICE

Commissioner for Patents
United States Patent and Trademark Office
P.O. Box 1450
Alexandria, VA 22313-1450
www.uspto.gov

MERCK AND CO., INC
P O BOX 2000
RAHWAY NJ 07065-0907

COPY MAILED

DEC 3 1 2007

OFFICE OF PETITIONS

In re Application of
Williams et al
Application No. 60/831,415
Filed: July 17, 2006
Attorney Docket No. 22099PV

DECISION ON PETITION

This is a decision on the petition under 37 CFR 1.182, filed, July 11, 2007, to change the name of inventor "H. Marie Moritz" to – H. Marie Langford --.

The petition is **DISMISSED**.

Any request for reconsideration should be filed within **TWO MONTHS** of the mailing date of this decision in order to be considered timely. 37 CFR 1.181(f). This time period may not be extended pursuant to 37 CFR 1.136.

Pursuant to MPEP 605.04(c), the petition to change the name of inventor Moritz must include an appropriate petition fee and a statement signed by the inventor setting forth both names and the procedure whereby the change of name was effected, or a copy of the court order.

Applicants are also strongly encouraged to submit an application data sheet (37 CFR 1.76) showing the new name. An ADS filed with the application is not required to be signed unless the ADS includes a nonpublication request. 37 CFR 1.33(b) requires that amendments and other papers, except for written assertions pursuant to 37 CFR 1.27(c)(2)(ii), filed in the application must be signed by an appropriate party. Therefore, an ADS or a supplemental ADS filed after the filing of an application must be signed in accordance with 37 CFR 1.33(b).

The Office is in receipt of $130.00. However, the current petition fee is $400.00. Accordingly, deposit account no. 13-2755 will be assessed the $270.00 difference.

In view of the above, the petition under § 1.182 cannot be granted at this time to change the inventor's name.

Further correspondence with respect to this matter should be addressed as follows:

By mail: Mail Stop PETITIONS

Commissioner for Patents
Post Office Box 1450
Alexandria, VA 22313-1450

By hand: Customer Service Window
Mail Stop Petitions
Randolph Building
401 Dulany Street
Alexandria, VA 22314

By fax: (571) 273-8300
ATTN: Office of Petitions

Any questions concerning this matter may be directed to the undersigned at (571) 272-3215.

Charlema Grant
Petitions Attorney
Office of Petitions

UNITED STATES PATENT AND TRADEMARK OFFICE

Commissioner for Patents
United States Patent and Trademark Office
P.O. Box 1450
Alexandria, VA 22313-1450
www.uspto.gov

MERCK AND CO., INC
P O BOX 2000
RAHWAY NJ 07065-0907

COPY MAILED

MAR 1 7 2008

OFFICE OF PETITIONS

In re Application of :
Williams et al. :
Application No. 60/831,415 : DECISION ON PETITION
Filed: July 17, 2006 :
Attorney Docket No. 22099PV :

This is a decision on the renewed petition under 37 CFR 1.182, filed, January 22, 2008, to change the name of inventor "H. Marie Moritz" to – H. Marie Langford --.

The petition is **GRANTED**.

Office records have been updated to reflect the inventor's change of name. A corrected Filing Receipt, which reflects the inventor's change of name, accompanies this decision on petition.

Any questions concerning this matter may be directed to the undersigned at (571) 272-3215.

This application is being referred to the Files Repository.

Charlema Grant
Petitions Attorney
Office of Petitions

ATTACHMENT: Corrected Filing Receipt

UNITED STATES PATENT AND TRADEMARK OFFICE

UNITED STATES DEPARTMENT OF COMMERCE
United States Patent and Trademark Office
Address: COMMISSIONER FOR PATENTS
P.O. Box 1450
Alexandria, Virginia 22313-1450
www.uspto.gov

APPLICATION NUMBER	FILING or 371(c) DATE	GRP ART UNIT	FIL FEE REC'D	ATTY.DOCKET.NO	TOT CLAIMS	IND CLAIMS
60/831,415	07/17/2006		200	22099PV		

CONFIRMATION NO. 6960

CORRECTED FILING RECEIPT

210
MERCK AND CO., INC
P O BOX 2000
RAHWAY, NJ 07065-0907

OC000000028888161

Date Mailed: 03/17/2008

Receipt is acknowledged of this provisional patent application. It will not be examined for patentability and will become abandoned not later than twelve months after its filing date. Any correspondence concerning the application must include the following identification information: the U.S. APPLICATION NUMBER, FILING DATE, NAME OF APPLICANT, and TITLE OF INVENTION. Fees transmitted by check or draft are subject to collection. Please verify the accuracy of the data presented on this receipt. **If an error is noted on this Filing Receipt, please write to the Office of Initial Patent Examination's Filing Receipt Corrections. Please provide a copy of this Filing Receipt with the changes noted thereon. If you received a "Notice to File Missing Parts" for this application, please submit any corrections to this Filing Receipt with your reply to the Notice. When the USPTO processes the reply to the Notice, the USPTO will generate another Filing Receipt incorporating the requested corrections**

Applicant(s)

Peter D. Williams, Harleysville, PA;
Shankar Venkatraman, Lansdale, PA;
H. Marie Langford, Phoenixville, PA;
Boyoung Kim, Lansdale, PA;
Theresa Booth, Warminster, PA;
Jay A. Grobler, Gwynedd, PA;

Power of Attorney:
Kenneth Walton--32951

Projected Publication Date: None, application is not eligible for pre-grant publication
Non-Publication Request: No
Early Publication Request: No
Title

1-Hydroxy naphthyridine compounds as anti-HIV agents

PROTECTING YOUR INVENTION OUTSIDE THE UNITED STATES

Since the rights granted by a U.S. patent extend only throughout the territory of the United States and have no effect in a foreign country, an inventor who wishes patent protection in another country must apply for a patent in a specific country or in regional patent offices. Applicants may wish to consider the filing of an international application under the Patent Cooperation Treaty (PCT). An international (PCT) application generally has the same effect as a regular national patent application in each PCT-member country. The PCT process **simplifies** the filing of patent applications on the same invention in member countries, but **does not result** in a grant of "an international

patent" and does not eliminate the need of applicants to file additional documents and fees in countries where patent protection is desired.

Almost every country has its own patent law, and a person desiring a patent in a particular country must make an application for patent in that country in accordance with its particular laws. Since the laws of many countries differ in various respects from the patent law of the United States, applicants are advised to seek guidance from specific foreign countries to ensure that patent rights are not lost prematurely.

Applicants also are advised that in the case of inventions made in the United States, the Director of the USPTO must issue a license before applicants can apply for a patent in a foreign country. The filing of a U.S. patent application serves as a request for a foreign filing license. The application's filing receipt contains further information and guidance as to the status of applicant's license for foreign filing.

Applicants may wish to consult the USPTO booklet, "General Information Concerning Patents" (specifically, the section entitled "Treaties and Foreign Patents") for more information on timeframes and deadlines for filing foreign patent applications. The guide is available either by contacting the USPTO Contact Center at 800-786-9199, or it can be viewed on the USPTO website at http://www.uspto.gov/web/offices/pac/doc/general/index.html.

For information on preventing theft of your intellectual property (patents, trademarks and copyrights), you may wish to consult the U.S. Government website, http://www.stopfakes.gov. Part of a Department of Commerce initiative, this website includes self-help "toolkits" giving innovators guidance on how to protect intellectual property in specific countries such as China, Korea and Mexico. For questions regarding patent enforcement issues, applicants may call the U.S. Government hotline at 1-866-999-HALT (1-866-999-4158).

LICENSE FOR FOREIGN FILING UNDER

Title 35, United States Code, Section 184

Title 37, Code of Federal Regulations, 5.11 & 5.15

GRANTED

The applicant has been granted a license under 35 U.S.C. 184, if the phrase "IF REQUIRED, FOREIGN FILING LICENSE GRANTED" followed by a date appears on this form. Such licenses are issued in all applications where the conditions for issuance of a license have been met, regardless of whether or not a license may be required as set forth in 37 CFR 5.15. The scope and limitations of this license are set forth in 37 CFR 5.15(a) unless an earlier license has been issued under 37 CFR 5.15(b). The license is subject to revocation upon written notification. The date indicated is the effective date of the license, unless an earlier license of similar scope has been granted under 37 CFR 5.13 or 5.14.

This license is to be retained by the licensee and may be used at any time on or after the effective date thereof unless it is revoked. This license is automatically transferred to any related applications(s) filed under 37 CFR 1.53(d). This license is not retroactive.

The grant of a license does not in any way lessen the responsibility of a licensee for the security of the subject matter as imposed by any Government contract or the provisions of existing laws relating to espionage and the national security or the export of technical data. Licensees should apprise themselves of current regulations especially with respect to certain countries, of other agencies, particularly the Office of Defense Trade Controls, Department of State (with respect to Arms, Munitions and Implements of War (22 CFR 121-128)); the Bureau of Industry and

Security, Department of Commerce (15 CFR parts 730-774); the Office of Foreign AssetsControl, Department of Treasury (31 CFR Parts 500+) and the Department of Energy.

NOT GRANTED

No license under 35 U.S.C. 184 has been granted at this time, if the phrase "IF REQUIRED, FOREIGN FILING LICENSE GRANTED" DOES NOT appear on this form. Applicant may still petition for a license under 37 CFR 5.12, if a license is desired before the expiration of 6 months from the filing date of the application. If 6 months has lapsed from the filing date of this application and the licensee has not received any indication of a secrecy order under 35 U.S.C. 181, the licensee may foreign file the application pursuant to 37 CFR 5.15(b).

UNITED STATES PATENT AND TRADEMARK OFFICE

Commissioner for Patents
United States Patent and Trademark Office
P.O. Box 1450
Alexandria, VA 22313-1450
www.uspto.gov

BROWDY AND NEIMARK, P.L.L.C.
624 NINTH STREET, NW
SUITE 300
WASHINGTON DC 20001-5303

COPY MAILED

OCT 0 2 2006

OFFICE OF PETITIONS

In re Application of :
Peles et al. :
Application No. 60/831,669 : DECISION GRANTING PETITION
Deposited: July 19, 2006 :
Attorney Docket No. PELES3 :
Title of Invention: Regulation of :
Mylelination By Nectin-Like (NECL) :
Molecules :

This is a decision on the petition filed August 9, 2006, requesting that the above-identified application be accorded a filing date of July 19, 2006.

On July 19, 2006, applicant deposited the above-identified application. On August 7, 2006, the Office of Initial Patent Examination mailed a "Notice of Incomplete Provisional Application," stating that the application had not been accorded a filing date as the application was deposited without drawings. Accordingly, the filing date would be the date of receipt of the drawings.

The present petition was filed wherein Petitioner contends 9 sheets of drawings were present upon filing on July 19, 2006. In support, the petition is accompanied by a copy of applicants' return postcard receipt which lists nine (9) sheets of drawings and a copy of the nine sheets of drawings.

Applicant's postcard receipt is prima facie evidence that nine sheets of drawings were received on July 19, 2006, but the nine sheets of drawings are not present in the file. Hence, it is clear that the papers for this application were mishandled by the Office. Therefore, it is concluded that nine sheets of drawings were received on July 19, 2006, as shown in counsel's file, and later misplaced in the office.

Since original drawings cannot be located in the Office, the drawings supplied on August 9, 2006 will be used for processing purposes.

The petition is **granted**. No petition fee is due and none has been

charged.

The application will be returned to the Office of Initial Patent Examination for further processing with a **filing date of July 19, 2006**, using the substitute 9 sheets of drawings supplied on August 9, 2006.

Any inquiries related to this decision should be directed to the undersigned at (571) 272-3215.

Charlema R. Grant
Petitions Attorney
Office of Petitions

UNITED STATES PATENT AND TRADEMARK OFFICE

UNITED STATES DEPARTMENT OF COMMERCE
United States Patent and Trademark Office
Address: COMMISSIONER FOR PATENTS
P.O. Box 1450
Alexandria, Virginia 22313-1450
www.uspto.gov

APPL NO.	FILING OR 371(c) DATE	ART UNIT	FIL FEE REC'D	ATTY.DOCKET NO	TOT CLMS	IND CLMS
60/831,727	07/18/2006		250	17-29-PRO		

CONFIRMATION NO. 7886

CORRECTED FILING RECEIPT

OC000000023873861

58727
STAHL LAW FIRM
2 MEADOWSWEET LANE
SAN CARLOS, CA 94070

Date Mailed: 05/15/2007

Receipt is acknowledged of this provisional Patent Application. It will not be examined for patentability and will become abandoned not later than twelve months after its filing date. Be sure to provide the U.S. APPLICATION NUMBER, FILING DATE, NAME OF APPLICANT, and TITLE OF INVENTION when inquiring about this application. Fees transmitted by check or draft are subject to collection. Please verify the accuracy of the data presented on this receipt. **If an error is noted on this Filing Receipt, please mail to the Commissioner for Patents P.O. Box 1450 Alexandria Va 22313-1450. Please provide a copy of this Filing Receipt with the changes noted thereon. If you received a "Notice to File Missing Parts" for this application, please submit any corrections to this Filing Receipt with your reply to the Notice. When the USPTO processes the reply to the Notice, the USPTO will generate another Filing Receipt incorporating the requested corrections (if appropriate).**

Applicant(s)

Liangfen Fan, Spring, TX;
Glenn Friedrich, Houston, TX;
Laurie Jeanette Minze, Katy, TX;
Charles Montgomery, Conroe, TX;
Bobby Joe Payne, The Woodlands, TX;
Carolina Rangel, The Woodlands, TX;
Arthur T. Sands, The Woodlands, TX;
Tracy Ellen Willis Sevaux, Conroe, TX;
Zheng-Zheng Shi, The Woodlands, TX;
Mary Jean Sparks, Magnolia, TX;
Peter Vogel, The Woodlands, TX;
Brian Zambrowicz, The Woodlands, TX;

Power of Attorney:

Norbert Stahl--44350

If Required, Foreign Filing License Granted: 08/03/2006

The country code and number of your priority application, to be used for filing abroad under the Paris Convention, is US60/831,727

Projected Publication Date: None, application is not eligible for pre-grant publication

Non-Publication Request: Not applicable

Early-Publication Request: Not applicable

Title

Genetically engineered and phenotyped mice and stem cell clones for producing the same

PROTECTING YOUR INVENTION OUTSIDE THE UNITED STATES

Since the rights granted by a U.S. patent extend only throughout the territory of the United States and have no effect in a foreign country, an inventor who wishes patent protection in another country must apply for a patent in a specific country or in regional patent offices. Applicants may wish to consider the filing of an international application under the Patent Cooperation Treaty (PCT). An international (PCT) application generally has the same effect as a regular national patent application in each PCT-member country. The PCT process **simplifies** the filing of patent applications on the same invention in member countries, but **does not result** in a grant of "an international patent" and does not eliminate the need of applicants to file additional documents and fees in countries where patent protection is desired.

Almost every country has its own patent law, and a person desiring a patent in a particular country must make an application for patent in that country in accordance with its particular laws. Since the laws of many countries differ in various respects from the patent law of the United States, applicants are advised to seek guidance from specific foreign countries to ensure that patent rights are not lost prematurely.

Applicants also are advised that in the case of inventions made in the United States, the Director of the USPTO must issue a license before applicants can apply for a patent in a foreign country. The filing of a U.S. patent application serves as a request for a foreign filing license. The application's filing receipt contains further information and guidance as to the status of applicant's license for foreign filing.

Applicants may wish to consult the USPTO booklet, "General Information Concerning Patents" (specifically, the section entitled "Treaties and Foreign Patents") for more information on timeframes and deadlines for filing foreign patent applications. The guide is available either by contacting the USPTO Contact Center at 800-786-9199, or it can be viewed on the USPTO website at http://www.uspto.gov/web/offices/pac/doc/general/index.html.

For information on preventing theft of your intellectual property (patents, trademarks and copyrights), you may wish to consult the U.S. Government website, http://www.stopfakes.gov. Part of a Department of Commerce initiative, this website includes self-help "toolkits" giving innovators guidance on how to protect intellectual property in specific countries such as China, Korea and Mexico. For questions regarding patent enforcement issues, applicants may call the U.S. Government hotline at 1-866-999-HALT (1-866-999-4158).

LICENSE FOR FOREIGN FILING UNDER
Title 35, United States Code, Section 184
Title 37, Code of Federal Regulations, 5.11 & 5.15

GRANTED

The applicant has been granted a license under 35 U.S.C. 184, if the phrase "IF REQUIRED, FOREIGN FILING LICENSE GRANTED" followed by a date appears on this form. Such licenses are issued in all applications where the conditions for issuance of a license have been met, regardless of whether or not a license may be required as set forth in 37 CFR 5.15. The scope and limitations of this license are set forth in 37 CFR 5.15(a) unless an earlier license has been issued under 37 CFR 5.15(b). The license is subject to revocation upon written notification. The date indicated is the effective date of the license, unless an earlier license of similar scope has been granted under 37 CFR 5.13 or 5.14.

This license is to be retained by the licensee and may be used at any time on or after the effective date thereof unless it is revoked. This license is automatically transferred to any related applications(s) filed under 37 CFR 1.53(d). This license is not retroactive.

The grant of a license does not in any way lessen the responsibility of a licensee for the security of the subject matter as imposed by any Government contract or the provisions of existing laws relating to espionage and the national security or the export of technical data. Licensees should apprise themselves of current regulations especially with respect to certain countries, of other agencies, particularly the Office of Defense Trade Controls, Department of State (with respect to Arms, Munitions and Implements of War (22 CFR 121-128)); the Bureau of Industry and Security, Department of Commerce (15 CFR parts 730-774); the Office of Foreign Assets Control, Department of Treasury (31 CFR Parts 500+) and the Department of Energy.

NOT GRANTED

No license under 35 U.S.C. 184 has been granted at this time, if the phrase "IF REQUIRED, FOREIGN FILING LICENSE GRANTED" DOES NOT appear on this form. Applicant may still petition for a license under 37 CFR 5.12, if a license is desired before the expiration of 6 months from the filing date of the application. If 6 months has lapsed from the filing date of this application and the licensee has not received any indication of a secrecy order under 35 U.S.C. 181, the licensee may foreign file the application pursuant to 37 CFR 5.15(b).

UNITED STATES PATENT AND TRADEMARK OFFICE

COMMISSIONER FOR PATENTS
UNITED STATES PATENT AND TRADEMARK OFFICE
P.O. BOX 1450
ALEXANDRIA, VA 22313-1450
www.uspto.gov

MARSHALL, GERSTEIN & BORUN LLP
233 S. WACKER DRIVE, SUITE 6300
SEARS TOWER
CHICAGO, IL 60606

COPY MAILED
NOV 20 2006
OFFICE OF PETITIONS

In re Application of :
Franquiz, et al. :
Filed: July 20, 2006 : ON PETITION
Application No. 60/832,021 :
Atty. Dkt. No.: 29171/41895 :

This decision is in response to the petition, filed October 2, 2006, requesting withdrawal of the Notice mailed August 1, 2006.

The petition is hereby GRANTED TO THE EXTENT INDICATED HEREIN.

The above-identified application was filed July 20, 2006. The Notice of Omitted Items in a Nonprovisional Application ("Notice") mailed August 1, 2006 indicated that Figures 9b-c and 10b-c appeared to have been omitted from the application as filed.

The Notice permits applicant to either: (I) establish prior receipt in the PTO of Figure 2 of the drawings; (II) submit the omitted figure and accept the date of such submission as the application filing date. An assertion that the missing page of specification was in fact deposited in the PTO with the application papers must made by way of petition (and the appropriate petition fee) with evidence of such deposit. An applicant desiring to submit the omitted item in a nonprovisional application and accept the date of such submission as the application filing date must file any omitted item with an oath or declaration in compliance with 37 CFR 1.63 and 1.64 referring to such item and a petition under 37 CFR 1.182 (with the petition fee under 37 CFR 1.17(h)) requesting the later filing date within two months of the date of the Notice (37 CFR 1.181(f)); or (III) take no action thereby constructively accepting the application as deposited in the USPTO.

Petitioners contend that the application as filed contained no omissions and that the figures in question were merely mislabeled.

Since it is obvious from the petition that no figures were actually missing on July 20, 2006, the application will be processed using the drawings filed on July 20, 2006.

However, the Notice was correct in advising applicants that Figures 9b-c and 10b-c appeared to have been omitted. Therefore, the Notice was properly mailed and will not be withdrawn and the petition fee will not be refunded since the petition was not necessary to correct any PTO error.

The application is being returned to Initial Patent Examination Division for further processing with a filing date of July 20, 2006, using the drawing sheets filed on that date.

Telephone inquiries related to this decision may be directed to the undersigned at (571) 272-3205.

Alesia M. Brown
Petitions Attorney
Office of Petitions

UNITED STATES PATENT AND TRADEMARK OFFICE

Commissioner for Patents
United States Patent and Trademark Office
P.O. Box 1450
Alexandria, VA 22313-1450
www.uspto.gov
DIW Dec-06

MCANDREWS HELD & MALLOY, LTD
500 WEST MADISON STREET
SUITE 3400
CHICAGO IL 60661

COPY MAILED
DEC 0 8 2006
OFFICE OF PETITIONS

In re Application of	:
Tony Cantrell	:
Application No. 60/832,178	: DECISION DISMISSING PETITION
Filed: 19 July, 2006	:
Attorney Docket No. 17737US01	:

This is a decision in reference to the petition filed on 2 October, 2006, requesting that the above-identified application be accorded a filing date of 19 July, 2006, with one sheet of drawings containing Figure 107 described in the specification as a part of the original disclosure.

The petition is dismissed.

On 19 July, 2006, the application was filed.

Accordingly, on 2 August, 2006, Initial Patent Examination Division mailed a Notice of Omitted Item(s) in a Provisional Application stating that Figure 107 described in the specification appeared to have been omitted from the application. In response, on 2 October, 2006, the present petition and a copy of one (1) sheet of drawings containing Figure 107 were filed.

Petitioner asserts that the one (1) sheet of drawings containing Figure 107 not missing from the application papers filed on 19 July, 2006.

Petitioner's argument has been considered, but is not persuasive. The U.S. Patent and Trademark Office (Office) file is the official record of the papers originally filed in this application. A review of the papers originally filed reveals that 76 sheets of drawings, comprising Figures 1-69 and 100-106, were filed on 19 July, 2006. No sheet of drawings containing Figure 107 was filed on 19 July, 2006, since no such sheet of

drawings is present among the application papers received on that date. An applicant alleging that a paper was filed in the Office and later misplaced has the burden of proving the allegation by a preponderance of the evidence.

It is noted that the USPTO has a long-established and well publicized practice for *prima facie* establishing the date of receipt of correspondence that has either been mailed or otherwise delivered to the PTO, and is asserted to have been subsequently misplaced: the itemized postcard receipt practice of MPEP 503.[1] This practice requires that any paper(s) for which a receipt is desired be filed in the USPTO with a self-addressed postcard identifying the paper(s). A postcard receipt which itemizes and properly identifies the paper(s) which is being filed serves as *prima facie* evidence of receipt in the USPTO of all the items listed thereon on the date stamped thereon by the USPTO.

However, due to the absence in the record of a postcard receipt itemized with respect to the drawings that bears a USPTO date stamp of 19 July, 2006, showing that 77 sheets of drawings were received in the USPTO on 19 July, 2006, the application cannot be accorded a filing date of 19 July, 2006, with one sheet of drawings containing Figure 107 as a part of the original disclosure.

As petitioner states that a postcard was filed with the application papers, petitioner should submit a copy of any itemized return receipt postcard stamped by the Office with any renewed petition.

As this petition was necessitated by applicant's filing error rather than an error on the part of the Office, the petition fee of $400.00 will not be refunded.

The application will be processed using only the application papers present on filing. The one (1) sheet of drawings containing Figure 107 will not be processed or examined, but will be retained in the application file.

---

[1] The public was afforded a "reminder" of the then extent post card receipt practice at 857 *Off. Gaz. Pat. Off.* 667 (*O.G.*) (Nov. 21, 1968). This specific notice is usually repeated annually, in a January "Consolidated Listing" section of the *O.G.* that contains important *O.G.* notices of continuing relevance.

Any request for reconsideration should be filed within **TWO MONTHS** of the date of this decision in order to be considered timely. This time period may not be extended pursuant to 37 CFR 1.136.

Further correspondence with respect to this matter should be addressed as follows:

By mail: Mail Stop Petition
Commissioner for Patents
P.O. Box 1450
Alexandria, VA 22313-1450

By FAX: (571) 273-8300
Attn: Office of Petitions

By hand: Customer Service Window
Mail Stop Petition
Randolph Building
401 Dulany Street
Alexandria, VA 22314

The application is being forwarded to the Office of Initial Patent Examination for further processing with a filing date of 19 July, 2006, using only the application papers filed on that date.

Telephone inquiries concerning this matter may be directed to the undersigned at (571) 272-3231.

D Wood

Douglas I. Wood
Senior Petitions Attorney
Office of Petitions

UNITED STATES PATENT AND TRADEMARK OFFICE

Commissioner for Patents
United States Patent and Trademark Office
P.O. Box 1450
Alexandria, VA 22313-1450
www.uspto.gov
DIW May-07

MCANDREWS HELD & MALLOY, LTD
500 WEST MADISON STREET
SUITE 3400
CHICAGO IL 60661

COPY MAILED

MAY 09 2007

OFFICE OF PETITIONS

In re Application of	:	
Tony Cantrell	:	
Application No. 60/832,178	:	ON PETITION
Filed: 19 July, 2006	:	
Atty Docket No. 17737US01	:	

This is a decision in reference to the renewed petition filed on 8 February, 2007, requesting that the above-identified application be accorded a filing date of 19 July, 2006, with Figure 107 described in the specification as a part of the original disclosure.

The petition is dismissed.

On 19 July, 2006, the application was filed.

On 2 August, 2006, Initial Patent Examination Division mailed a Notice of Omitted Item(s) in a Nonprovisional Application stating that the application had been accorded a filing date of 19 July, 2006, but that Figure 107 described in the specification appeared to have been omitted from the application. The petition filed on 2 October, 2006, was dismissed on 8 December, 2006.

The present renewed petition was filed on 8 February, 2007. Petitioner again asserts that one (1) sheet of drawings containing Figure 107 was among the application papers deposited on 19 July, 2006. In support petitioner presents a postcard itemizing the filing of, *inter alia*, 107 sheets of drawings. The postcard has been annotated, however, to indicate that that the Office "did not receive one page of drawing".

The U.S. Patent and Trademark Office (Office) file is the official record of the papers originally filed in this application. A review of the papers originally filed reveals

that 76 sheets of drawings, comprising Figures 1-69 and 100-106, were filed on 19 July, 2006. No sheet of drawings containing Figure 107 was filed on 19 July, 2006, since no such sheet of drawings is present among the application papers received on that date.

As stated previously, it is noted that the USPTO has a long-established and well publicized practice for *prima facie* establishing the date of receipt of correspondence that has either been mailed or otherwise delivered to the PTO, and is asserted to have been subsequently misplaced: the itemized postcard receipt practice of MPEP 503.[1] This practice requires that any paper(s) for which a receipt is desired be filed in the USPTO with a self-addressed postcard identifying the paper(s). A postcard receipt which itemizes and properly identifies the paper(s) which is being filed serves as *prima facie* evidence of receipt in the USPTO of all the items listed thereon on the date stamped thereon by the USPTO. In this case, petitioners postcard has been annotated to indicate that one (1) sheet of drawings was not received, which corroborates the official record.

Petitioner essentially argues that the annotation on the postcard should be disregarded because the USPTO did not cross off on the postcard the item(s) not received, and the person crossing off the items(s) did not initial the postcard.

Specifically, petitioner argues that the handwritten text cannot rebut the postcard's value as *prima facie* evidence because (1) it is not clear that the text was written by the USPTO, and (2) because the USPTO failed to follow its "mandatory procedure" set forth in MPEP 503.

Petitioner's arguments have been considered, but are unpersuasive. At the outset, petitioner concedes that the annotation was not present when the postcard was placed in the envelope with the application papers for mailing to the USPTO. As such, the annotation was placed on the postcard after the envelope was opened, and the postcard removed. The postcard was then sent back to applicant via the USPS. As such, the only reasonable inference is that the annotation was placed on the postcard by a USPTO employee after reviewing the papers contained

---

[1] The public was afforded a "reminder" of the then extent post card receipt practice at 857 *Off. Gaz. Pat. Off.* 667 (*O.G.*) (Nov. 21, 1968). This specific notice is usually repeated annually, in a January "Consolidated Listing" section of the *O.G.* that contains important *O.G.* notices of continuing relevance.

in the envelope, and determining that one sheet of drawings (*i.e.*, the sheet containing Figure 107), had been omitted.

Likewise, petitioner's argument that the annotation must be ignored because the person receiving the items did not cross off and initial the omitted item is not well taken. While the MPEP describes a procedure for crossing off and initialling items found to be omitted, MPEP 503 further states that if the postcard receipt has been **annotated** to indicate that a particular item denoted on the postcard was not received by the USPTO, the postcard receipt will not serve as *prima facie* evidence of receipt of that item in the USPTO. The showing of record is that the postcard has been annotated to show that one sheet of drawings was not received. This annotation further corroborates the showing of the official record, which is that 76, not 77, sheets of drawings were received on 19 July, 2006. As such, the postcard cannot reasonably be construed as *prima facie* evidence of receipt of 77 sheets of drawings.

As such, the petition is **dismissed**.

The application will be processed using only the application papers present on filing.

The application is being forwarded to the Office of Initial Patent Examination for further processing with a filing date of 19 July, 2006, using only the application papers filed on that date.

Telephone inquiries concerning this matter may be directed to the undersigned at (571) 272-3231.

DWood

Douglas I. Wood
Senior Petitions Attorney
Office of Petitions

UNITED STATES PATENT AND TRADEMARK OFFICE

Commissioner for Patents
United States Patent and Trademark Office
P.O. Box 1450
Alexandria, VA 22313-1450
www.uspto.gov

FOLEY HOAG, LLP
PATENT GROUP,
WORLD TRADE CENTER WEST
155 SEAPORT BLVD.
BOSTON, MA 02110

COPY MAILED

FEB 2 5 2009

OFFICE OF PETITIONS

In re Application of
Christian Sampson et al
Application No. 60/832,240
Filed: July 19, 2006
For: SUB-ATMOSPHERIC PRESSURE CHAMBER FOR MECHANICAL ASSISTANCE OF BLOOD FLOW

DECISION ON PETITION

This is a decision on the petition under the unintentional provisions of 37 CFR 1.137(b), filed January 27, 2009, to revive the above-identified application.

The petition is **GRANTED**.

The petition satisfies the conditions for revival pursuant to the provisions of 37 CFR 1.137(b) in that (1) the reply; (2) the petition fee; and (3) the required statement of unintentional delay have been received. Accordingly, the reply to the Notice of August 1, 2006, is accepted as having been unintentionally delayed.

This application has been abandoned for an extended period of time. The U.S. Patent and Trademark Office is relying on petitioner's duty of candor and good faith and accepting the statement that "the entire delay in filing the required reply from the due date for the reply until the filing of a grantable petition pursuant to 37 CFR 1.137(b) was unintentional." *See* Changes to Patent Practice and Procedure, 62 Fed. Reg., at 53160 and 53178; 1203 Off. Gaz. Pat. Office, at 88 and 103 (responses to comments 64 and 109) (applicant obligated under 37 CFR 10.18 to inquire into the underlying facts and circumstances when providing the statement required by 37 CFR 1.137(b) to the U.S. Patent and Trademark Office).

An extension of time under 37 CFR 1.136 must be filed prior to the expiration of the maximum extendable period for reply. *See* In re Application of S., 8 USPQ2d 1630, 1631 (Comm'r Pats. 1988). Since the $65.00 extension of time fee submitted with the

petition on January 27, 2009 was subsequent to the maximum extendable period for reply, petitioner may request a refund of this fee by writing to the Office of Finance, Refund Section. A copy of this decision should accompany the request.

Additionally, the power of attorney submitted on January 27, 2009 is not proper. Petitioner should submit a proper power of attorney to include the application number.

Telephone inquiries concerning this decision should be directed to the undersigned at (571) 272-3208.

This application is being referred to the Office of Patent Application Processing for pre-examination processing.

Karen Creasy

Karen Creasy
Petitions Examiner
Office of Petitions

UNITED STATES PATENT AND TRADEMARK OFFICE

UNITED STATES DEPARTMENT OF COMMERCE
United States Patent and Trademark Office
Address: COMMISSIONER FOR PATENTS
P.O. Box 1450
Alexandria, Virginia 22313-1450
www.uspto.gov

APPL NO.	FILING OR 371 (c) DATE	ART UNIT	FIL FEE REC'D	ATTY.DOCKET NO	DRAWINGS	TOT CLMS	IND CLMS
60/833,099	07/25/2006		100	YEH-P100	1		

CONFIRMATION NO. 6106

CORRECTED FILING RECEIPT

OC000000020179872

23290
HOLLANDER LAW FIRM, P.L.C.
SUITE 305
10300 EATON PLACE
FAIRFAX, VA 22030

Date Mailed: 08/24/2006

Receipt is acknowledged of this provisional Patent Application. It will not be examined for patentability and will become abandoned not later than twelve months after its filing date. Be sure to provide the U.S. APPLICATION NUMBER, FILING DATE, NAME OF APPLICANT, and TITLE OF INVENTION when inquiring about this application. Fees transmitted by check or draft are subject to collection. Please verify the accuracy of the data presented on this receipt. **If an error is noted on this Filing Receipt, please mail to the Commissioner for Patents P.O. Box 1450 Alexandria Va 22313-1450. Please provide a copy of this Filing Receipt with the changes noted thereon. If you received a "Notice to File Missing Parts" for this application, please submit any corrections to this Filing Receipt with your reply to the Notice. When the USPTO processes the reply to the Notice, the USPTO will generate another Filing Receipt incorporating the requested corrections (if appropriate).**

Applicant(s)

Henry Yeh, McLean, VA;
Cheng-Hao Lee, Oakton, VA;

Power of Attorney: The patent practitioners associated with Customer Number **23290**.

If Required, Foreign Filing License Granted: 08/02/2006

The country code and number of your priority application, to be used for filing abroad under the Paris Convention, is US60/833,099

Projected Publication Date: None, application is not eligible for pre-grant publication

Non-Publication Request: Not applicable

Early-Publication Request: Not applicable

**** SMALL ENTITY ****

Title

Method for customization of karaoke music product

PROTECTING YOUR INVENTION OUTSIDE THE UNITED STATES

Since the rights granted by a U.S. patent extend only throughout the territory of the United States and have no effect in a foreign country, an inventor who wishes patent protection in another country must apply for a patent in a specific country or in regional patent offices. Applicants may wish to consider the filing of an international application under the Patent Cooperation Treaty (PCT). An international (PCT) application generally has the same effect as a regular national patent application in each PCT-member country. The PCT process **simplifies** the filing of patent applications on the same invention in member countries, but **does not result** in a grant of "an international patent" and does not eliminate the need of applicants to file additional documents and fees in countries where patent protection is desired.

Almost every country has its own patent law, and a person desiring a patent in a particular country must make an application for patent in that country in accordance with its particular laws. Since the laws of many countries differ in various respects from the patent law of the United States, applicants are advised to seek guidance from specific foreign countries to ensure that patent rights are not lost prematurely.

Applicants also are advised that in the case of inventions made in the United States, the Director of the USPTO must issue a license before applicants can apply for a patent in a foreign country. The filing of a U.S. patent application serves as a request for a foreign filing license. The application's filing receipt contains further information and guidance as to the status of applicant's license for foreign filing.

Applicants may wish to consult the USPTO booklet, "General Information Concerning Patents" (specifically, the section entitled "Treaties and Foreign Patents") for more information on timeframes and deadlines for filing foreign patent applications. The guide is available either by contacting the USPTO Contact Center at 800-786-9199, or it can be viewed on the USPTO website at http://www.uspto.gov/web/offices/pac/doc/general/index.html.

For information on preventing theft of your intellectual property (patents, trademarks and copyrights), you may wish to consult the U.S. Government website, http://www.stopfakes.gov. Part of a Department of Commerce initiative, this website includes self-help "toolkits" giving innovators guidance on how to protect intellectual property in specific countries such as China, Korea and Mexico. For questions regarding patent enforcement issues, applicants may call the U.S. Government hotline at 1-866-999-HALT (1-866-999-4158).

LICENSE FOR FOREIGN FILING UNDER
Title 35, United States Code, Section 184
Title 37, Code of Federal Regulations, 5.11 & 5.15

GRANTED

The applicant has been granted a license under 35 U.S.C. 184, if the phrase "IF REQUIRED, FOREIGN FILING LICENSE GRANTED" followed by a date appears on this form. Such licenses are issued in all applications where the conditions for issuance of a license have been met, regardless of whether or not a license may be required as set forth in 37 CFR 5.15. The scope and limitations of this license are set forth in 37 CFR 5.15(a) unless an earlier license has been issued under 37 CFR 5.15(b). The license is subject to revocation upon written notification. The date indicated is the effective date of the license, unless an earlier license of similar scope has been granted under 37 CFR 5.13 or 5.14.

This license is to be retained by the licensee and may be used at any time on or after the effective date thereof unless it is revoked. This license is automatically transferred to any related applications(s) filed under 37 CFR 1.53(d). This license is not retroactive.

The grant of a license does not in any way lessen the responsibility of a licensee for the security of the subject matter as imposed by any Government contract or the provisions of existing laws relating to espionage and the national security or the export of technical data. Licensees should apprise themselves of current regulations especially with respect to certain countries, of other agencies, particularly the Office of Defense Trade Controls, Department of State (with respect to Arms, Munitions and Implements of War (22 CFR 121-128)); the Bureau of Industry and Security, Department of Commerce (15 CFR parts 730-774); the Office of Foreign Assets Control, Department of Treasury (31 CFR Parts 500+) and the Department of Energy.

NOT GRANTED

No license under 35 U.S.C. 184 has been granted at this time, if the phrase "IF REQUIRED, FOREIGN FILING LICENSE GRANTED" DOES NOT appear on this form. Applicant may still petition for a license under 37 CFR 5.12, if a license is desired before the expiration of 6 months from the filing date of the application. If 6 months has lapsed from the filing date of this application and the licensee has not received any indication of a secrecy order under 35 U.S.C. 181, the licensee may foreign file the application pursuant to 37 CFR 5.15(b).

UNITED STATES PATENT AND TRADEMARK OFFICE

Commissioner for Patents
United States Patent and Trademark Office
Washington, D.C. 20231
www.uspto.gov

Paper No.

Judy Jarecki-Black, Ph.D.,J.D
3239 Satellite Blvd.
Duluth GA 30096

COPY MAILED

JUN 2 8 2007

OFFICE OF PETITIONS

In re Application of
Audonnet et al.
Application No. 60/833,208
Filed: July 25, 2006
Attorney Docket No. MER 06-072P

DECISION ON PETITION

This is a decision on the petition filed on May 3, 2007, pursuant to 37 CFR 1.137(b), to revive the above-identified provisional application.

The petition is **DISMISSED.**

Any request for reconsideration of this decision must be submitted within TWO (2) MONTHS from the mail date of this decision. Extensions of time under 37 CFR 1.136(a) are permitted. The reconsideration request should include a cover letter entitled "Renewed Petition under 37 CFR 1.137(b)."

The above-identified provisional application became abandoned for failure to reply in a timely manner to the "Notice to File Missing Parts of Provisional Application" mailed August 10, 2006. The Notice required applicant to submit a provisional application cover sheet under 37 CFR 1.51(c)(1)(or supplemental Application Data Sheet under 37 CFR 1.76) identifying either the city and state or city and foreign country of residence of each inventor, along with a $50 surcharge. This Notice set a period for reply of two (2) months from the mail date of the Notice, with extensions of time under the provisions of 37 C.F.R. § 1.136(a) permitted. No reply having been received and no extension obtained, the above-identified provisional application became abandoned on January 22, 2002. The present petition precedes the mailing of a courtesy Notice of Abandonment.

A grantable petition pursuant to 37 CFR 1.137(b) must be accompanied by:

(1) The reply required to the outstanding Office action or notice, unless previously filed;

(2) The petition fee as set forth in § 1.17(m);

(3) A statement that the entire delay in filing the required reply from the due date for the reply until the filing of a grantable petition pursuant to this paragraph was unintentional. The Commissioner may require additional information where there is a question whether the delay was unintentional; and

(4) Any terminal disclaimer (and fee as set forth in § 1.20(d)) required pursuant to paragraph (d) of this section.

37 CFR 1.137(g) further provides that:

A provisional application, abandoned for failure to timely respond to an Office requirement, may be revived pursuant to

> this section. Subject to the provisions of 35 U.S.C. 119(e)(3) and § 1.7(b), a provisional application will not be regarded as pending after twelve months from its filing date under any circumstances.

The instant petition does not satisfy requirement(1). The required reply within the meaning of § 1.137(b)(1) is the reply that would have been sufficient to avoid abandonment of the application. On petition, petitioner submits an extension of time fee and a request that the provisional application be revived for copendency with a later filed nonprovisional application. No reply to the requirement to submit a provisional cover sheet identifying the residence of each inventor is provided. This is not acceptable.

As stated in MPEP 711.03(c)

> 37 CFR 1.137 is applicable to a provisional application abandoned for failure to reply to an Office requirement. A petition under 37 CFR 1.137(a) or (b) must be accompanied by any outstanding reply to an Office requirement, since 37 CFR 1.137(a)(1) and 1.137(b)(1) permit the filing of a continuing application in lieu of the required reply only in a nonprovisional application.

In order for the provisional application to be revived and be considered pending for the twelve month period ending July 25, 2007, petitioner must submit the required reply, a provisional cover sheet (or supplemental ADS) and the $50 surcharge.

Further correspondence with respect to this matter should be addressed as follows:

By mail:	Mail Stop Petition Commissioner for Patents P.O. Box 1450 Alexandria, VA 22313-1450
By FAX:	(571) 273-8300 ATTN: NANCY JOHNSON SENIOR PETITIONS ATTORNEY
By hand:	Customer Service Window Randolph Building 401 Dulany Street Alexandria, VA 22314

Telephone inquiries concerning this decision should be directed to the undersigned at (571) 272-3219.

Nancy Johnson
Senior Petitions Attorney
Office of Petitions

07-23-07

DAC

OIPE IAP70 JUL 20 2007 PATENT & TRADEMARK OFFICE

PATENT
MER 06-072P
574313-3317

IN THE UNITED STATES PATENT AND TRADEMARK OFFICE

Applicant(s)	:	Jean-Christophe Audonnet et al.
Serial No.	:	60/833,208
For	:	Vaccines Against Vesicular Stomatitis
Filed	:	July 25, 2006

EXPRESS MAIL

Mailing Label Number: EV846432503US

Date of Deposit: July 20, 2007

I hereby certify that this paper or fee is being deposited with the United States Postal Service "Express Mail Post Office to Addressee" Service under 37 CFR 1.10 on the date indicated above and is addressed to: **Mail Stop Petition, Commissioner for Patents, P.O. Box 1450, Alexandria, VA 22313-1450.**

Tiki S. Cantrell
(Typed or printed name of person mailing paper or fee)

(Signature of person mailing paper or fee)

REQUEST FOR RECONSIDERATION OF DECISION ON PETITION UNDER 37 C.F.R. § 1.137(b) TO REVIVE AN UNINTENTIONALLY ABANDONED APPLICATION

Attention: Office of Petitions
Mail Stop Petition
Commissioner for Patents
P.O. Box 1450
Alexandria, VA 22313-1450

07/24/2007 EEKUBAY1 00000012 502354 60833208
01 FC:1453 1500.00 DA

Dear Sir:

This is a request for reconsideration of the Decision on Petition under 37 C.F.R. § 1.137(b) to revive the above-identified application which was unintentionally abandoned as a result of a failure to respond to an Notice to File Missing Parts within the statutory period of two months from the mailing date of the Notice to File Missing Parts.

Enclosed is the provisional patent application cover sheet identifying the residence of each inventor. The Commissioner is hereby authorized to charge the amount of **$50.00** as to

07/24/2007 EEKUBAY1 00000011 502354 60833208
01 FC:1254 1590.00 DA

07/24/2007 EEKUBAY1 00000010 502354 60833208
01 FC:1052 50.00 DA

Deposit Account No. 50-2354 for the surcharge fee.

The failure to timely respond to the Notice to File Missing Parts was unintentional.

The entire delay to timely respond to the Notice to File Missing Parts was unintentional.

It is respectfully requested that this application be revived due to unintentional abandonment.

It is respectfully requested that this application be revived to establish copendency with U.S. application Serial No. 11/505,064. Applicant herewith petitions the Director of the United States Patent and Trademark Office to extend the time for reply to the Office action dated August 10, 2006 for four (4) months from October 10, 2006 to February 10, 2007. The Commissioner is hereby authorized to charge the amount of **$1,590.00** as required by 37 CFR § 1.17(a)(4) to Deposit Account No. 50-2354.

This petition to revive has been prepared and filed without intentional delay. Applicant hereby petitions for revival of this application.

The entire delay in filing the required reply from the due date for the required reply until the filing of a grantable petition under 37 C.F.R. § 1.137(b) was unintentional.

The Commissioner is hereby authorized to charge the amount of **$1500.00** as required by 37 CFR § 1.17(m) as well as any additional fee for this paper or credit any overpayment to Deposit Account No. 50-2354.

APPLICANT HEREBY PETITIONS FOR REVIVAL OF THIS APPLICATION:

1. A reply to the outstanding Notice to File Missing Parts along with authorization for $50.00 for the surcharge fee.
2. Authorization for $1500.00 for the petition fee for revival of this application accompanies this Petition.
3. Authorization for $1,590.00 for the four month extension of time fee for reply to the Notice to File Missing Parts dated August 10, 2006 accompanies this Petition.
4. Please charge any additional fees which may be incurred by reason of this Petition or credit any overpayment to Deposit Account No. 50-2354.
5. Verified Statement:

The delay caused by the abandonment of this application was unintentional.

I hereby declare that all statements made herein of my own knowledge are true and that all statements made on information and belief are believed to be true; and further that these statements were made with the knowledge that willful false statements and the like so made are punishable by fine or imprisonment, or both, under Section 1001 of Title 18 of the United States Code, and that such willful false statements may jeopardize the validity of this application, any patent issuing thereon, or any patent to which this verified statement is directed.

The Commissioner is authorized to charge any deficiency or credit any overpayment in these fees for this paper to Deposit Account No. 50-2354.

Respectfully submitted,
MERIAL LIMITED

By: _____
Judy Jarecki-Black, Ph.D.
Reg. No. 44,170

July 20, 2007

3239 Satellite Blvd.
Duluth, Georgia 30096-4640
Tel. No. (678) 638-3805
Fax No. (678) 638-3350

OIPE IAP70
JUL 20 2007
PATENT & TRADEMARK OFFICE

PTO/SB/16 (01-04)
Approved for use through 07/31/2006. OMB 0651-0032
U.S. Patent and Trademark Office; U.S. DEPARTMENT OF COMMERCE

Under the Paperwork Reduction Act of 1995, no persons are required to respond to a collection of information unless it displays a valid OMB control number.

PROVISIONAL APPLICATION FOR PATENT COVER SHEET

This is a request for filing a PROVISIONAL APPLICATION FOR PATENT under 37 CFR 1.53(c).

Express Mail Label No. EV846433044US

INVENTOR(S)

Given Name (first and middle [if any])	Family Name or Surname	Residence (City and either State or Foreign Country)
Jean-Christophe	AUDONNET	Lyon, France
Jules Maarten	MINKE	Corbas, France

Additional inventors are being named on the 1 *separately numbered sheets attached hereto*

TITLE OF THE INVENTION (500 characters max)

Vaccines Against Vesicular Stomatitis

Direct all correspondence to: **CORRESPONDENCE ADDRESS**

☑ Customer Number:

OR

☑ Firm or Individual Name	Judy Jarecki-Black, Ph.D.,J.D				
Address	3239 Satellite Blvd.				
Address					
City	Duluth	State	Georgia	Zip	30096
Country	United States	Telephone	678-638-3805	Fax	678-638-3350

ENCLOSED APPLICATION PARTS *(check all that apply)*

☑ Specification *Number of Pages* 30

☑ Drawing(s) *Number of Sheets* 11

☐ Application Data Sheet. See 37 CFR 1.76

☐ CD(s), Number

☐ Other (specify)

METHOD OF PAYMENT OF FILING FEES FOR THIS PROVISIONAL APPLICATION FOR PATENT

☐ Applicant claims small entity status. See 37 CFR 1.27.

☐ A check or money order is enclosed to cover the filing fees.

☑ The Director is herby authorized to charge filing fees or credit any overpayment to Deposit Account Number: 502354

☐ Payment by credit card. Form PTO-2038 is attached.

FILING FEE Amount ($): 200.00

The invention was made by an agency of the United States Government or under a contract with an agency of the United States Government.

☑ No.

☐ Yes, the name of the U.S. Government agency and the Government contract number are:

Respectfully submitted,

SIGNATURE

TYPED or PRINTED NAME Judy Jarecki-Black, Ph.D,J.D

TELEPHONE 678-638-3805

Date July 24, 2006

REGISTRATION NO. 44,170
(if appropriate)
Docket Number: MER 06-072P

USE ONLY FOR FILING A PROVISIONAL APPLICATION FOR PATENT

This collection of information is required by 37 CFR 1.51. The information is required to obtain or retain a benefit by the public which is to file (and by the USPTO to process) an application. Confidentiality is governed by 35 U.S.C. 122 and 37 CFR 1.14. This collection is estimated to take 8 hours to complete, including gathering, preparing, and submitting the completed application form to the USPTO. Time will vary depending upon the individual case. Any comments on the amount of time you require to complete this form and/or suggestions for reducing this burden, should be sent to the Chief Information Officer, U.S. Patent and Trademark Office, U.S. Department of Commerce, P.O. Box 1450, Alexandria, VA 22313-1450. DO NOT SEND FEES OR COMPLETED FORMS TO THIS ADDRESS. **SEND TO: Mail Stop Provisional Application, Commissioner for Patents, P.O. Box 1450, Alexandria, VA 22313-1450.**

If you need assistance in completing the form, call 1-800-PTO-9199 and select option 2.

PROVISIONAL APPLICATION COVER SHEET
Additional Page

PTO/SB/16 (08-03)
Approved for use through 07/31/2006. OMB 0651-0032
U.S. Patent and Trademark Office; U.S. DEPARTMENT OF COMMERCE
Under the Paperwork Reduction Act of 1995, no persons are required to respond to a collection of information unless it displays a valid OMB control number.

Docket Number MER 06-072P

INVENTOR(S)/APPLICANT(S)

Given Name (first and middle [if any])	Family or Surname	Residence (City and either State or Foreign Country)
Jiansheng	YAO	North York, ON

Number _____ of_____

WARNING: Information on this form may become public. Credit card information should not be included on this form. Provide credit card information and authorization on PTO-2038.

UNITED STATES PATENT AND TRADEMARK OFFICE

UNITED STATES DEPARTMENT OF COMMERCE
United States Patent and Trademark Office
Address: COMMISSIONER FOR PATENTS
P.O. Box 1450
Alexandria, Virginia 22313-1450
www.uspto.gov

APPL NO.	FILING OR 371 (c) DATE	ART UNIT	FIL FEE REC'D	ATTY.DOCKET NO	DRAWINGS	TOT CLMS	IND CLMS
60/834,078	07/26/2006		200	06-0726-MBMT	5		

CONFIRMATION NO. 2585

CORRECTED FILING RECEIPT

OC000000020906285

26357
ROBERT M. HUNTER PLLC
P.O. BOX 2709
KAMUELA, HI 96743

Date Mailed: 10/19/2006

Receipt is acknowledged of this provisional Patent Application. It will not be examined for patentability and will become abandoned not later than twelve months after its filing date. Be sure to provide the U.S. APPLICATION NUMBER, FILING DATE, NAME OF APPLICANT, and TITLE OF INVENTION when inquiring about this application. Fees transmitted by check or draft are subject to collection. Please verify the accuracy of the data presented on this receipt. **If an error is noted on this Filing Receipt, please mail to the Commissioner for Patents P.O. Box 1450 Alexandria Va 22313-1450. Please provide a copy of this Filing Receipt with the changes noted thereon. If you received a "Notice to File Missing Parts" for this application, please submit any corrections to this Filing Receipt with your reply to the Notice. When the USPTO processes the reply to the Notice, the USPTO will generate another Filing Receipt incorporating the requested corrections (if appropriate).**

Applicant(s)

Ian Ashdown, West Vancouver, CA;
Ingo Speier, Vancouver, CA;
Damien Loveland, Richmond, CA;

Power of Attorney: The patent practitioners associated with Customer Number **26357**.

If Required, Foreign Filing License Granted: 08/11/2006

The country code and number of your priority application, to be used for filing abroad under the Paris Convention, is US60/834,078

Projected Publication Date: None, application is not eligible for pre-grant publication

Non-Publication Request: Not applicable

Early-Publication Request: Not applicable

Title

Optical emission feedback method and apparatus

PROTECTING YOUR INVENTION OUTSIDE THE UNITED STATES

Since the rights granted by a U.S. patent extend only throughout the territory of the United States and have no effect in a foreign country, an inventor who wishes patent protection in another country must apply for a patent in a specific country or in regional patent offices. Applicants may wish to consider the filing of an international application under the Patent Cooperation Treaty (PCT). An international (PCT) application generally has the same effect as a regular national patent application in each PCT-member country. The PCT process **simplifies** the filing of patent applications on the same invention in member countries, but **does not result** in a grant of "an international patent" and does not eliminate the need of applicants to file additional documents and fees in countries where patent protection is desired.

Almost every country has its own patent law, and a person desiring a patent in a particular country must make an application for patent in that country in accordance with its particular laws. Since the laws of many countries differ in various respects from the patent law of the United States, applicants are advised to seek guidance from specific foreign countries to ensure that patent rights are not lost prematurely.

Applicants also are advised that in the case of inventions made in the United States, the Director of the USPTO must issue a license before applicants can apply for a patent in a foreign country. The filing of a U.S. patent application serves as a request for a foreign filing license. The application's filing receipt contains further information and guidance as to the status of applicant's license for foreign filing.

Applicants may wish to consult the USPTO booklet, "General Information Concerning Patents" (specifically, the section entitled "Treaties and Foreign Patents") for more information on timeframes and deadlines for filing foreign patent applications. The guide is available either by contacting the USPTO Contact Center at 800-786-9199, or it can be viewed on the USPTO website at http://www.uspto.gov/web/offices/pac/doc/general/index.html.

For information on preventing theft of your intellectual property (patents, trademarks and copyrights), you may wish to consult the U.S. Government website, http://www.stopfakes.gov. Part of a Department of Commerce initiative, this website includes self-help "toolkits" giving innovators guidance on how to protect intellectual property in specific countries such as China, Korea and Mexico. For questions regarding patent enforcement issues, applicants may call the U.S. Government hotline at 1-866-999-HALT (1-866-999-4158).

LICENSE FOR FOREIGN FILING UNDER
Title 35, United States Code, Section 184
Title 37, Code of Federal Regulations, 5.11 & 5.15

GRANTED

The applicant has been granted a license under 35 U.S.C. 184, if the phrase "IF REQUIRED, FOREIGN FILING LICENSE GRANTED" followed by a date appears on this form. Such licenses are issued in all applications where the conditions for issuance of a license have been met, regardless of whether or not a license may be required as set forth in 37 CFR 5.15. The scope and limitations of this license are set forth in 37 CFR 5.15(a) unless an earlier license has been issued under 37 CFR 5.15(b). The license is subject to revocation upon written notification. The date indicated is the effective date of the license, unless an earlier license of similar scope has been granted under 37 CFR 5.13 or 5.14.

This license is to be retained by the licensee and may be used at any time on or after the effective date thereof unless it is revoked. This license is automatically transferred to any related applications(s) filed under 37 CFR 1.53(d). This license is not retroactive.

The grant of a license does not in any way lessen the responsibility of a licensee for the security of the subject matter as imposed by any Government contract or the provisions of existing laws relating to espionage and the national security or the export of technical data. Licensees should apprise themselves of current regulations especially with respect to certain countries, of other agencies, particularly the Office of Defense Trade Controls, Department of State (with respect to Arms, Munitions and Implements of War (22 CFR 121-128)); the Bureau of Industry and Security, Department of Commerce (15 CFR parts 730-774); the Office of Foreign Assets Control, Department of Treasury (31 CFR Parts 500+) and the Department of Energy.

NOT GRANTED

No license under 35 U.S.C. 184 has been granted at this time, if the phrase "IF REQUIRED, FOREIGN FILING LICENSE GRANTED" DOES NOT appear on this form. Applicant may still petition for a license under 37 CFR 5.12, if a license is desired before the expiration of 6 months from the filing date of the application. If 6 months has lapsed from the filing date of this application and the licensee has not received any indication of a secrecy order under 35 U.S.C. 181, the licensee may foreign file the application pursuant to 37 CFR 5.15(b).

UNITED STATES PATENT AND TRADEMARK OFFICE

Commissioner for Patents
United States Patent and Trademark Office
P.O. Box 1450
Alexandria, VA 22313-1450
www.uspto.gov

MEYER UNKOVIC & SCOTT LLP
1300 OLIVER BUILDING
PITTSBURGH, PA 15222

COPY MAILED
OCT 1 0 2006
OFFICE OF PETITIONS

In re Application of Langworthy et al. :
Application No. 60/834,506 : Decision on Petition
Filing Date: July 31, 2006 :
Attorney Docket No. 276993.100 :

This is a decision in response to the petition filed September 19, 2006, requesting the application be accorded a filing date of July 31, 2006.

The petition is **granted**.

The application was filed July 31, 2006.

Petitioner filed 4 oversized drawings with the application. The oversized drawings were not scanned into the image wrapper but instead placed into an artifact folder.

The Office of Initial Patent Examination mailed a "Notice of Incomplete Nonprovisional Application" on August 11, 2006. The Notice stated drawings did not appear to be part of the application as filed and that a filing date would be accorded upon the submission of drawings.

In response, the present petition was filed. Petitioner alleges, and has established, drawings were filed with the original application. Therefore the application was complete on filing.

The Notice mailed August 11, 2006, was sent in error and is hereby vacated.

The $400 petition fee will be credited to petitioner's deposit account.

The Office of Initial Patent Examination will be informed of the instant decision will process the application with a filing date of July 31, 2006, using the papers filed on July 31, 2006, which include 4 sheets of drawings placed in an artifact folder.

Telephone inquiries regarding this communication should be directed to Petitions Attorney Steven Brantley at (571) 272-3203.

Charles Steven Brantley
Senior Petitions Attorney
Office of Petitions

UNITED STATES PATENT AND TRADEMARK OFFICE

Commissioner for Patents
United States Patent and Trademark Office
P.O. Box 1450
Alexandria, VA 22313-1450
www.uspto.gov
DIW Nov-06

PETER K. TRZYNA, ESQ.
P O BOX 7131
CHICAGO IL 60680

COPY MAILED
DEC 0 1 2006
OFFICE OF PETITIONS

In re Application of :
Moody et al. :
Application No. 60/835,983 : DECISION ON PETITION
Filed: 7 August, 2006 :
Atty Docket No. Child-P1-06 :

This is a decision on the petition filed on 25 September, 2006, which is treated as a petition under 37 CFR 1.53 requesting that the above-identified application be accorded a filing date of 7 August, 2006, with 11 pages of specification as a part of the original disclosure.

The petition is granted.

On 7 August, 2006, the application was filed.

Accordingly, on 21 August, 2006, Initial Patent Examination Division mailed a Notice of Omitted Items in a Provisional Application, stating that the application had been accorded a filing date of 7 August, 2006, but that Page 1 of the specification (description and claims) appeared to have been omitted.

In response, on 25 September, 2006, the present petition and a copy of Page 1 of the specification were filed. Petitioners argue that Page 1 was filed with the other application papers on 7 August, 2006, but was subsequently misplaced in the U.S. Patent and Trademark Office (Office). In support, a copy of petitioners' postcard receipt was supplied with the present petition. The postcard receipt shows an "Office date" stamp of "080706" and contains the above-identified application number, and identifies the application by the first named inventor's name, invention title, and attorney docket number, and acknowledges receipt of 11 pages of provisional application, along with a Provisional Application Cover Sheet and 4 sheets of drawings. Petitioners request that the application, including Page 1 of the specification be accorded a filing date of 7 August, 2006.

A review of the record reveals that Pages 2-11 of the specification, 2 pages of cover sheet, and four (4) sheets of drawings were received on 7 August, 2006. No Page 1 of the specification is located among the application papers received on that date. However, the evidence is convincing that the application papers deposited on 7 August, 2006, included Page 1 of the specification, which was subsequently misplaced in the Office. Therefore, the application, including Page 1 of the specification, is entitled to a filing date of 7 August, 2006.

Petitioners should note, when preparing future filings, that the postcard receipt should itemize the total number of pages of specification (including written description, claims, and abstract).[1] However, it is clear, for purposes of this petition, that the 11 pages of application referred to on petitioners' postcard did not include the provisional application cover sheet or the four (4) sheets of drawings, but rather referred solely to the specification.

The "Notice" mailed on 21 August, 2006, is vacated.

In view of the above, the petition is granted. No petition fee is necessary and none has been charged.

The application will be processed with the copy of Page 1 of the specification, as a part of the original disclosure.

The application is being returned to Initial Patent Examination Division for further processing with a filing date of 7 August, 2006, using the application papers filed on that date and the copy of Page 1 of the specification supplied with the present petition.

Telephone inquires should be directed to the undersigned at 571-272-3231.

D Wood

Douglas I. Wood
Senior Petitions Attorney
Office of Petitions

---

[1] MPEP 503.

UNITED STATES PATENT AND TRADEMARK OFFICE

Commissioner for Patents
United States Patent and Trademark Office
P.O. Box 1450
Alexandria, VA 22313-1450
www.uspto.gov

Tony Lin
Calmor Optcom, Inc.
755 N. Pastoria Ave.
Sunnyvale CA 94085

COPY MAILED

MAR 1 7 2008

OFFICE OF PETITIONS

In re Application of	:	
Tony Lin et al.	:	
Application No. 60/835,993	:	ON PETITION
Filed: August 7, 2006	:	
Attorney Docket No.	:	

This is a decision on the petition under 37 CFR 1.137(b), filed June 15, 2007, to revive the above-identified application.

The petition is **GRANTED**.

The application became abandoned for failure to reply in a timely manner to the Notice to File Missing Parts of Nonprovisional Application (Notice) mailed August 21, 2006. The Notice set a period for reply of two (2) months from the mail date of the Notice. No extensions of time under the provisions of 37 CFR 1.136(a) were obtained. Accordingly, the application became abandoned on October 24, 2006. The Notice of Abandonment was mailed May 4, 2007.

The petition satisfies the requirements of 37 CFR 1.137(b) in that petitioner has supplied (1) the reply in the form of an application cover sheet and required fee; (2) the petition fee of $750; and (3) an adequate statement of unintentional delay.

37 CFR 1.137(b)(3) requires a statement that "the entire delay in filing the required reply from the due date for the reply until the filing of a grantable petition pursuant to 37 CFR 1.137(b) was unintentional." Since the statement appearing in the petition varies from the language required by 37 CFR 1.137(b)(3), the statement is being construed as the required statement. Petitioner must notify the Office if this is not a correct reading of the statement appearing in the petition.

It is not apparent whether the person signing the statement of unintentional delay was in a position to have firsthand or direct knowledge of the facts and circumstances of the delay at issue. Nevertheless, such statement is being treated as having been made as the result of a reasonable inquiry into the facts and circumstances of such delay. See 37 CFR 10.18(b) and Changes to Patent Practice and Procedure; Final Rule Notice, 62 Fed. Reg. 53131, 53178 (October 10, 1997), 1203 Off. Gaz. Pat. Office 63, 103 (October 21, 1997). In the event that such an inquiry has not been made, petitioner must make such an inquiry. If such inquiry results in the discovery that it is not correct that the entire delay in filing the required reply from the due date for the reply until the filing of a grantable petition pursuant to 37 CFR 1.137(b) was unintentional, petitioner must notify the Office.

There is no indication that the person signing the petition was ever given a power of attorney to prosecute the application. If the person signing the petition desires to receive future correspondence regarding this application, the appropriate power of attorney document must be submitted. While a courtesy copy of this decision is being mailed to the person signing the petition, all future correspondence will be directed to the address currently of record until appropriate instructions are received.

Telephone inquiries concerning this decision should be directed to Terri Williams at (571) 272-2991.

A provisional application may be revived so as to be pending for a period no longer than 12 months from its filing date. This application is hereby deemed revived until August 7, 2007, when it went abandoned as a matter of law.

This matter is being referred to the Office of Patent Application Processing for retention purposes.

Liana Walsh
Petitions Examiner
Office of Petitions

UNITED STATES PATENT AND TRADEMARK OFFICE

COMMISSIONER FOR PATENTS
UNITED STATES PATENT AND TRADEMARK OFFICE
P.O. BOX 1450
ALEXANDRIA, VA 22313-1450
www.uspto.gov

COPY MAILED

SEP 19 2007

OFFICE OF PETITIONS

Ioan G. Crihan
470 East 64th Street
New York, NY 10021

In re application of :
Ioan G. Crihan, et al. :
Application No. 60/836,131 : ON PETITION
Deposited: August 8, 2006 :
For: CERCAN (IMMUNITY PILLS) :

This is a decision in response to a petition, filed April 25, 2007, to revive the above-identified application under the provisions of 37 CFR 1.137(b).

The petition is **DISMISSED**.

A review of the record shows that the application was deposited on August 8, 2006. However, on December 1, 2006, a Notice of Incomplete Provisional Application was mailed, requiring a specification. On March 12, 2007, a Notice of Termination of Proceeding Under 37 CFR 1.53(e) was mailed stating that the proceedings on the above-application were terminated because (1) the application did not meet the requirements to be entitled to a filing date, and (2) the filing error specified in the December 1, 2006 Notice was not timely corrected. In response, on April 25, 2007, the present petition was filed.

It is initially pointed out that the petition is signed by one of the two joint inventors. Therefore, it's filing does not comply with the requirements of 37 CFR 1.33(b)[1].

Further, the filing of a petition under 37 CFR 1.137(b) to revive the application on the basis of unintentional delay is inappropriate under the present circumstances. The application did not meet the requirements to be entitled to a filing date. Therefore, the Office

---

[1] Amendments and other papers filed in the application must be signed by:
(1) An attorney or agent of record appointed in compliance with §1.34(b);
(2) A registered attorney or agent not of record who acts in a representative capacity under the provisions of §1.34(a);
(3) The assignee of record of the entire interest, if there is an assignee of record of the entire interest;
(4) An assignee of record of an undivided part interest, and any assignee(s) of the remaining interest and any applicant retaining an interest, if there is an assignee of record of an undivided part interest; or
(5) **All of the applicants** (§§ 1.42. 1.43 and 1.47) for patent, unless there is an assignee of record of the entire interest and such assignee has taken action in the application in accordance with §§ 3.71 and 3.73. (emphasis added)

terminated the proceedings in the application pursuant to 37 CFR 1.53(e)(2). An incomplete application that has not been accorded a filing date cannot be held abandoned and, therefore, cannot be revived. Accordingly, the $750 petition fee is subject to refund.

Petitioner should note that the filing date of this application will be the date of receipt of the specification required in the Notice of December 1, 2006. Any assertions that the specification was submitted must be by way of a properly signed petition under 37 CFR 1.53(e), accompanied by the $400 petition fee under 37 CFR 1.17(h).

Petitioner may request that fee for treatment of the petition under 37 CFR 1.53 (e) be deducted from the $750 petition fee previously paid and that the $350 balance be refunded. If petitioner does not wish to pursue the petition under 37 CFR 1.53(e), then petitioner may simply request that the entire $750 petition fee be refunded. Any request for refund must included a copy of this decision and be mailed to Mail Stop 16, Director of the U.S. Patent and Trademark Office, P. O. Box 1450, Alexandria, VA 22313-1450 or faxed to the Customer Service Help Desk at (571) 273-6500.

Any petition under 37 CFR 1.53(e) should be addressed as follows:

By mail: Mail Stop PETITION
Commissioner for Patents
Post Office Box 1450
Alexandria, VA 22313-1450

By hand: U.S. Patent and Trademark Office
Customer Service Window, Mail Stop PETITION
Randolph Building
401 Dulany Street
Alexandria, VA 22314

The centralized facsimile number is **(571) 273-8300**.

Any questions concerning this matter may be directed to the undersigned at (571) 272-3204.

Sherry D. Brinkley
Petitions Examiner
Office of Petitions

UNITED STATES PATENT AND TRADEMARK OFFICE

Commissioner for Patents
United States Patent and Trademark Office
P.O. Box 1450
Alexandria, VA 22313-1450
www.uspto.gov

COPY MAILED

JAN 14 2008

OFFICE OF PETITIONS

YOUNG & BASILE, P.C.
3001 WEST BIG BEAVER ROAD
SUITE 624
TROY MI 48084

In re Application of	:	
Lawrence Russell Carlson et al.	:	
Application No. 60/836,194	:	ON PETITION
Filed: August 7, 2006	:	
Attorney Docket No. CMI-100-A	:	

This is a decision on the petition under 37 CFR 1.137(b), filed July 18, 2007, to revive the above-identified application.

The petition is **GRANTED**.

The application became abandoned for failure to reply in a timely manner to the Notice to File Missing Parts of Nonprovisional Application (Notice) mailed August 22, 2006. The Notice set a period for reply of two (2) months from the mail date of the Notice. No extensions of time under the provisions of 37 CFR 1.136(a) was obtained. Accordingly, the application became abandoned on October 24, 2006. The Notice of Abandonment was mailed May 4, 2007.

The petition satisfies the requirements of 37 CFR 1.137(b) in that petitioner has supplied (1) the reply in the form of an application data sheet with city and state of inventors, $25 surcharge; (2) the petition fee of $750; and (3) an adequate statement of unintentional delay.

A provisional application may be revived so as to be pending for a period no longer than 12 months form its filing date. This application is hereby deemed revived until August 7, 2007 when it went abandoned as a matter of law.

Telephone inquiries concerning this decision should be directed to Terri Williams at (571) 272-2991.

This matter is being referred to the Office of Initial Patent Examination for retention purposes.

Liana Walsh
Petitions Examiner
Office of Petitions

UNITED STATES PATENT AND TRADEMARK OFFICE

Commissioner for Patents
United States Patent and Trademark Office
P.O. Box 1450
Alexandria, VA 22313-1450
www.uspto.gov

Robert Burnett
7512 Windhaven Road
North Richland Hills TX 76180

COPY MAILED

SEP 2 2 2008

OFFICE OF PETITIONS

In re Application of
Robert Burnett
Application No.60/836,207
Deposited: August 8, 2006
Title: Method and Communicating Vehicle Brake Engagement

DECISION ON PETITION

This is a decision on the petition filed under 37 CFR 1.137(b) to revive the provisional application. This petition is properly treated as a petition to accord a filing date under 37 CFR 1.53.

The petition under 37 CFR 1.53 is **GRANTED to the extent indicated**.

The petition under 37 CFR 1.137(b) is **DISMISSED** as inappropriate.

Application papers in the above-identified application were deposited on August 8, 2006. However, on August 22, 2006, the Office of Initial Patent Examination mailed a "Notice of Incomplete Nonprovisional Application", notifying applicant that the application papers had not been accorded a filing date because the application was deposited without drawings. The Notice of Incomplete Nonprovisional Application set an extendable two (2) month period for reply. A reply to the Notice was not received. Accordingly, this application was terminated on October 23, 2006. A Notice of Termination of Proceedings was mailed on December 1, 2008.

A petition under 37 CFR 1.137(b) is not appropriate where a filing date was never granted.

The application was not granted a filing date because the application was deposited without drawings.

Upon further review of the application it is evident that, as filed, the application contained at least one method claim. MPEP 601.01(f) provides that:

> It has been USPTO practice to treat an application that contains at least one process or method claim as an application for which a drawing is not necessary for an understanding of the invention under 35 U.S.C. 113 (first sentence).

Thus, pursuant to § 601.01(f), a drawing is not considered essential for a filing date. The instant application is entitled to a filing date without drawings present in the application.

To the extent the instant petition requests a filing date of **August 8, 2006** with no drawings present in the application, the petition is **GRANTED**.

Petitioner is reminded subject to the provisions of 35 U.S.C. 1.19(e) and §1.7(b), a provisional application will not be considered pending after twelve months from the filing date under any circumstances.

The address provided on the petition differs from the correspondence address of record. If appropriate a change of address should be submitted.

Pursuant to this decision, the application will be referred to Office of Patent Application Processing for:

***correction of the filing date to August 8, 2006 ;**

***for indication in Office records, as appropriate, that "0" sheets of drawings were present on filing and**

***for issuance of a filing receipt.**

Telephone inquiries concerning this matter should be directed to the undersigned at (571) 272-3215.

Charlema R. Grant

Charlema R. Grant

Petitions Attorney

Office of Petitions

cc: Robert Burnett

8563 Corral Circle

Keller, Texas 76248

UNITED STATES PATENT AND TRADEMARK OFFICE

UNITED STATES DEPARTMENT OF COMMERCE
United States Patent and Trademark Office
Address: COMMISSIONER FOR PATENTS
P.O. Box 1450
Alexandria, Virginia 22313-1450
www.uspto.gov

APPL NO.	FILING OR 371 (c) DATE	ART UNIT	FIL FEE REC'D	ATTY.DOCKET NO	DRAWINGS	TOT CLMS	IND CLMS
60/836,437	08/08/2006		600	0112020.00223US1	148		

CONFIRMATION NO. 5102

CORRECTED FILING RECEIPT

OC000000021651674

23483
WILMER CUTLER PICKERING HALE AND DORR LLP
60 STATE STREET
BOSTON, MA 02109

Date Mailed: 12/18/2006

Receipt is acknowledged of this provisional Patent Application. It will not be examined for patentability and will become abandoned not later than twelve months after its filing date. Be sure to provide the U.S. APPLICATION NUMBER, FILING DATE, NAME OF APPLICANT, and TITLE OF INVENTION when inquiring about this application. Fees transmitted by check or draft are subject to collection. Please verify the accuracy of the data presented on this receipt. **If an error is noted on this Filing Receipt, please mail to the Commissioner for Patents P.O. Box 1450 Alexandria Va 22313-1450. Please provide a copy of this Filing Receipt with the changes noted thereon. If you received a "Notice to File Missing Parts" for this application, please submit any corrections to this Filing Receipt with your reply to the Notice. When the USPTO processes the reply to the Notice, the USPTO will generate another Filing Receipt incorporating the requested corrections (if appropriate).**

Applicant(s)

Claude L. Bertin, South Burlington, VT;
Thomas Rueckes, Rockport, MA;
Ramesh Sivarajan, Medford, MA;

Power of Attorney: The patent practitioners associated with Customer Number **23483**.

Projected Publication Date: None, application is not eligible for pre-grant publication

Non-Publication Request: Not applicable

Early-Publication Request: Not applicable

**** SMALL ENTITY ****

Title

Nonvolatile nanotube diode

PROTECTING YOUR INVENTION OUTSIDE THE UNITED STATES

Since the rights granted by a U.S. patent extend only throughout the territory of the United States and have no

effect in a foreign country, an inventor who wishes patent protection in another country must apply for a patent in a specific country or in regional patent offices. Applicants may wish to consider the filing of an international application under the Patent Cooperation Treaty (PCT). An international (PCT) application generally has the same effect as a regular national patent application in each PCT-member country. The PCT process **simplifies** the filing of patent applications on the same invention in member countries, but **does not result** in a grant of "an international patent" and does not eliminate the need of applicants to file additional documents and fees in countries where patent protection is desired.

Almost every country has its own patent law, and a person desiring a patent in a particular country must make an application for patent in that country in accordance with its particular laws. Since the laws of many countries differ in various respects from the patent law of the United States, applicants are advised to seek guidance from specific foreign countries to ensure that patent rights are not lost prematurely.

Applicants also are advised that in the case of inventions made in the United States, the Director of the USPTO must issue a license before applicants can apply for a patent in a foreign country. The filing of a U.S. patent application serves as a request for a foreign filing license. The application's filing receipt contains further information and guidance as to the status of applicant's license for foreign filing.

Applicants may wish to consult the USPTO booklet, "General Information Concerning Patents" (specifically, the section entitled "Treaties and Foreign Patents") for more information on timeframes and deadlines for filing foreign patent applications. The guide is available either by contacting the USPTO Contact Center at 800-786-9199, or it can be viewed on the USPTO website at http://www.uspto.gov/web/offices/pac/doc/general/index.html.

For information on preventing theft of your intellectual property (patents, trademarks and copyrights), you may wish to consult the U.S. Government website, http://www.stopfakes.gov. Part of a Department of Commerce initiative, this website includes self-help "toolkits" giving innovators guidance on how to protect intellectual property in specific countries such as China, Korea and Mexico. For questions regarding patent enforcement issues, applicants may call the U.S. Government hotline at 1-866-999-HALT (1-866-999-4158).

LICENSE FOR FOREIGN FILING UNDER
Title 35, United States Code, Section 184
Title 37, Code of Federal Regulations, 5.11 & 5.15

GRANTED

The applicant has been granted a license under 35 U.S.C. 184, if the phrase "IF REQUIRED, FOREIGN FILING LICENSE GRANTED" followed by a date appears on this form. Such licenses are issued in all applications where the conditions for issuance of a license have been met, regardless of whether or not a license may be required as set forth in 37 CFR 5.15. The scope and limitations of this license are set forth in 37 CFR 5.15(a) unless an earlier license has been issued under 37 CFR 5.15(b). The license is subject to revocation upon written notification. The date indicated is the effective date of the license, unless an earlier license of similar scope has been granted under 37 CFR 5.13 or 5.14.

This license is to be retained by the licensee and may be used at any time on or after the effective date thereof unless it is revoked. This license is automatically transferred to any related applications(s) filed under 37 CFR 1.53(d). This license is not retroactive.

The grant of a license does not in any way lessen the responsibility of a licensee for the security of the subject matter as imposed by any Government contract or the provisions of existing laws relating to espionage and the national security or the export of technical data. Licensees should apprise themselves of current regulations especially with respect to certain countries, of other agencies, particularly the Office of Defense Trade Controls, Department of State (with respect to Arms, Munitions and Implements of War (22 CFR 121-128)); the Bureau of Industry and Security, Department of Commerce (15 CFR parts 730-774); the Office of Foreign Assets Control, Department of Treasury (31 CFR Parts 500+) and the Department of Energy.

NOT GRANTED

No license under 35 U.S.C. 184 has been granted at this time, if the phrase "IF REQUIRED, FOREIGN FILING LICENSE GRANTED" DOES NOT appear on this form. Applicant may still petition for a license under 37 CFR 5.12, if a license is desired before the expiration of 6 months from the filing date of the application. If 6 months has lapsed from the filing date of this application and the licensee has not received any indication of a secrecy order under 35 U.S.C. 181, the licensee may foreign file the application pursuant to 37 CFR 5.15(b).

UNITED STATES PATENT AND TRADEMARK OFFICE

Commissioner for Patents
United States Patent and Trademark Office
P.O. Box 1450
Alexandria, VA 22313-1450
www.uspto.gov

Howard Chen, Esq.
Preston Gates & Ellis LLP
Suite 1700
55 Second Street
San Francisco CA 94105

COPY MAILED

APR 06 2007

OFFICE OF PETITIONS

In re Application of	:	
Fang YIN et al.	:	
Application No. 60/837,379	:	DECISION ON PETITION
Filed: August 11, 2006	:	
Attorney Docket No. 06HXW381 Prov	:	

This is a decision on the petition under 37 CFR 1.182, filed March 20, 2007, to expressly abandon the instant provisional application.

The petition is **GRANTED**.

Petitioner requests abandonment of the instant application as it was filed in the United States in error. Therefore, the application is abandoned on even date commensurate with the mailing of this decision on petition.

Inspection of the instant application reveals that petitioner is not of record. 35 USC §111(b) does not require the submission of a declaration and power of attorney in order to obtain a filing date under 37 CFR 1.53(c) in a provisional application. Inasmuch as the individual filing the instant petition, Ting-Mao Chao, is the same person who filed the instant application, Tin-Mao Chao will be regarded as acting in a representative capacity pursuant to 37 CFR 1.34 in the filing of the subject petition to expressly abandon the application.

As authorized, the $400 fee for the petition under 37 CFR 1.182 has been assessed to petitioner's deposit account.

Any questions concerning this matter may be directed to BethAnne Dayoan at (571) 272-3209.

Brian Hearn
Petitions Examiner
Office of Petitions

UNITED STATES PATENT AND TRADEMARK OFFICE

Commissioner for Patents
United States Patent and Trademark Office
P.O. Box 1450
Alexandria, VA 22313-1450
www.uspto.gov

WOLF GREENFIELD & SACKS, PC
FEDERAL RESERVE PLAZA
600 ATLANTIC AVENUE
BOSTON, MA 02210-2206

COPY MAILED

FEB 09 2007

OFFICE OF PETITIONS

In re Application of	:	
De Luis et al.	:	
Application No. 60/837399	:	
Filing or 371(c) Date: 08/11/2006	:	
Attorney Docket Number:	:	DECISION
P0757.70000US00	:	ON PETITION

This is a decision on the "Petition For Filing Date in Response to Notice of Incomplete Provisional Application", filed October 20, 2006, requesting the above-identified application be accorded a filing date of August 11, 2006.

The petition is granted.

The application was filed on August 11, 2006. On August 28, 2006, the Office of Initial Patent Examination mailed a Notice of Incomplete Provisional Application (hereinafter "Notice"), informing Applicant that the application had NOT been accorded a filing date because the application had been deposited without drawings.

Applicant responds with the instant petition and avers that fourteen (14) sheets of drawings were filed in the application on August 11, 2006. In support of this assertion, Applicant files a copy of his return-receipt postcard acknowledging receipt of, *inter alia*, fourteen (14) sheets of drawings by this Office on August 11, 2006.

A review of the file reveals that the specification contains method claims. As stated in MPEP § 601.01(f), it is the practice of the PTO to treat an application that contains at least one process, method or composition claim as an application for which a drawing is not necessary for an understanding of the invention under 35 U.S.C. 113 (first sentence).

MPEP § 601.01(f) also states that:

> A nonprovisional application having at least one claim, or a provisional application having at least some disclosure, directed to the subject matter discussed above for which a drawing is usually not considered essential for a filing date, describing drawing figure(s) in the specification, but filed without drawings will be treated as an application filed without all of the drawing figures referred to in the specification as discussed in

MPEP § 601.01(g), so long as the application contains something that can be construed as a written description.

This application contains method claims; therefore, the application should have been treated as an application filed without all of the drawing figures referred to in the specification as discussed in MPEP § 601.01(g).

In applications filed without all of the drawing figure(s) referred to in the specification, the MPEP § 601.01(g) states that a "Notice of Omitted Item(s)" is mailed indicating that the application has been accorded a filing date, but is lacking some of the figures of drawings described in the specification.

In view of the above, the Notice mailed August 28, 2006, was mailed in error and is hereby withdrawn.

Applicant has also submitted evidence that the application as-deposited on August 11, 2006, included fourteen (14) sheets of drawings.

This application is being forwarded to the Office of Initial Patent Examination, Customer Corrections, for further processing, with the filing date of August 11, 2006, and an indication that no drawings were required and fourteen (14) sheets of drawings were present on filing, using the fourteen (14) sheets of drawings filed with the present petition on October 20, 2006.

A refund of the petition fee has been credited to Applicant's deposit account as authorized in the petition.

Telephone inquiries concerning this matter should be directed to the undersigned at (571-272-3232.

Derek L. Woods
Attorney
Office of Petitions

UNITED STATES PATENT AND TRADEMARK OFFICE

Commissioner for Patents
United States Patent and Trademark Office
P.O. Box 1450
Alexandria, VA 22313-1450
www.uspto.gov

DR. BENJAMIN ADLER
ADLER & ASSOCIATES
P.O. BOX 710509
HOUSTON TX 77271-0509

COPY MAILED

SEP 13 2007

OFFICE OF PETITIONS

In re Application of
David A. Scheinberg
Application No. 60/837,500
Filed: August 14, 2006
Attorney Docket No. D6724

DECISION ON PETITION

CORRECTED DECISION

This is a decision on the response filed August 13, 2007 which is treated as a petition under 37 CFR 1.53, requesting that the above-identified provisional application be accorded a filing date of August 14, 2006. This decision also addresses the petition to revive under 37 CFR 1.137(b) filed on even date.

The petition under 37 CFR 1.53(e) is **DISMISSED**.
The petition under 37 CFR 1.137(b) is **DISMISSED**.

The application was filed on August 14, 2006, without drawings. Accordingly, on August 30, 2006, the Office of Initial Patent Examination mailed a "Notice of Incomplete Provisional Application" stating that the application had been deposited without drawings. No response having been timely filed, a Notice of Termination of Proceedings under 37 CFR 1.53(e) was mailed December 8, 2006.

The present petition argues that drawings are not necessary for an understanding of the subject matter sought to be patented, and requests that the application be accorded a filing date of August 14, 2006.

Unfortunately, however, the balance of deposit account no. 07-1185 was insufficient to collect the funds necessary for consideration of the petition on its merits.

In view thereof, the petition to revive will also not be addressed until such time as the filing date petition is addressed.

A request for reconsideration with the appropriate fees can be filed and should be addressed as follows:

By mail: Mail Stop Petitions
Commissioner for Patents
P.O. Box 1450
Alexandria, VA 22313-1450

By FAX: (571) 273-8300
Office of Petitions

Telephone inquiries regarding this decision should be directed to the undersigned Petitions Attorney at (571) 272-3212.

Patricia Faison-Ball

Patricia Faison-Ball
Senior Petitions Attorney
Office of Petitions

UNITED STATES PATENT AND TRADEMARK OFFICE

Commissioner for Patents
United States Patent and Trademark Office
P.O. Box 1450
Alexandria, VA22313-1450
www.uspto.gov

DR. BENJAMIN ADLER
ADLER & ASSOCIATES
P.O. BOX 710509
HOUSTON TX 77271-0509

COPY MAILED

NOV 21 2007

OFFICE OF PETITIONS

In re Application of
David A. Scheinberg
Application No. 60/837,500
Filed: August 14, 2006
Attorney Docket No. D6724

: DECISION GRANTING PETITION

This is a decision on the request for reconsideration filed November 16, 2007 requesting that the above-identified provisional application be accorded a filing date of August 14, 2006. This decision also addresses the petition to revive under 37 CFR 1.137(b) filed on even date.

The petition under 37 CFR 1.53(e) is **GRANTED**.
The petition under 37 CFR 1.137(b) is **DISMISSED** as involving moot issues.

The application was filed on August 14, 2006, without drawings. Accordingly, on August 30, 2006, the Office of Initial Patent Examination mailed a "Notice of Incomplete Provisional Application" stating that the application had been deposited without drawings. No response having been timely filed, a Notice of Termination of Proceedings under 37 CFR 1.53(e) was mailed December 8, 2006.

The present petition argues that drawings are not necessary for an understanding of the subject matter sought to be patented, and requests that the application be accorded a filing date of August 14, 2006.

Based on petitioners argument, this application will be accorded a filing date of August 14, 2006. Petitioner is advised, however, that this decision does not constitute a determination in accordance with 35 U.S.C. § 113 (first sentence). However, the "Notice" was correct in stating that the application appeared to have been incomplete. Thus, the petition fee in the amount of $400.00 has been charged to petitioner's credit card.

The application will be processed for filing date purposes using only the application papers present on August 14, 2006. The drawings filed with the present petition will

not be processed as a part of the original disclosure, but will be retained in the application file. Petitioner is reminded that no amendment/corrections, other than to make the provisional application comply with the patent statute and all applicable regulations, may be made to a provisional application after the filing date of the provisional application. See 37 CFR 1.53(c); 37 CFR 1.121(j). As such, if petitioners desire to have the drawings submitted with the instant petition included, petitioners should simply file a new completed provisional application.

With regards to the petition for revival, since this application did not have a filing date, it could not therefore become abandoned. The Notice of Termination of Proceedings under 37 CFR 1.53(e) mailed December 8, 2006 advises that any request for reconsideration should be addressed to the Office of Initial Patent Examination with a response to the outstanding office action mailed August 30, 2006.

In view of the above, petitioner's deposit account no. 07-1185 has been credited in the amount of $750.00 and $20.00 is being refunded to petitioner's credit card for the petition to revive fee.[1] Further, this matter is being referred to the Office of Initial Patent Examination for processing with a filing date of August 14, 2006, using only the application papers filed on that date, and for an indication on the bib-data sheet that no (0) sheets of drawings were present on filing.

Telephone inquiries regarding this decision should be directed to the undersigned Petitions Attorney at (571) 272-3212.

Patricia Faison-Ball

Patricia Faison-Ball
Senior Petitions Attorney
Office of Petitions

[1]Effective September 30, 2007 the fee for a petition to revive has been increased to $770 for a small entity and $1540 for a large entity.

OIPE IAP1
NOV 16 2007
PATENT & TRADEMARK OFFICE

IN THE UNITED STATES PATENT AND TRADEMARK OFFICE

APPLICANT: Scheinberg, D.A.	§	ART UNIT:
	§	
FILED: August 14, 2006	§	
	§	EXAMINER:
SERIAL NO.: 60/837,500	§	
	§	
FOR: Selective Alpha Particle-Mediated Depletion of Tumor Vasculature with With Vascular Normalization	§	DOCKET: D6725

MAIL STOP PETITIONS
Commissioner for Patents
P.O. Box 1450
Alexandria, VA 22313-1450

11/19/2007 WASFAW1 00000054 071185 60837500
01 FC:1462 400.00 OP
02 FC:2453 750.00 DA 20.00 OP

REQUEST FOR RECONSIDERATION OF PETITION TO REVIVE PROVISIONAL APPLICATION UNDER 37 C.F.R. §1.137(g)

Dear Sir:

Applicants filed this Petition to Revive Provisional Application under 37 C.F.R. §1.137(g) on August 8, 2007, but failed to include the fee for the Petition under 37 C.F.R. §1.53 (e). Applicants respectfully request reconsideration of these petitions.

The proceedings for the above-referenced provisional application were terminated on October 31, 2006 for failure to timely respond to a Notice of Incomplete Provisional Application, as required by and within the two-month period set in the Notice, mailed on August 6, 2006.

The abandonment of the above-referenced provisional application and the entire delay, from the date of the abandonment to the filing of this Petition to Revive, was unintentional.

APPLICANTS HEREBY PETITION FOR REVIVAL OF THIS APPLICATION.

submitted the $750 fee to revive an unintentionally abandoned application under 37 C.F.R. §1.17(m) with the originally filed petition. Applicants enclose herewith the additional $20 increase in the petition fee under 37 C.F.R. §1.17(m) and the $400 petition fee under 37 C.F.R. §1.17(f). Please charge the $420 in fees to the credit card identified on the enclosed Form PTO-2038. **Only in the absence** of Form PTO-2038, please debit any applicable fees from Deposit Account No. 07-1185 upon which the undersigned is allowed to draw.

Respectfully submitted,

Date: Nov 13, 2007

Adler & Associates
8011 Candle Lane
Houston, TX 77071
Tel.: (713) 270-5391
Fax: (713) 270-5361
BEN@adlerandassociates.com

Benjamin Aaron Adler, Ph.D, J.D.
Registration No. 35,423
Counsel for Applicant

UNITED STATES PATENT AND TRADEMARK OFFICE

COMMISSIONER FOR PATENTS
UNITED STATES PATENT AND TRADEMARK OFFICE
P.O. BOX 1450
ALEXANDRIA, VA 22313-1450
www.uspto.gov

Rensselaer Polytechnic Institute
Attn: Office of Technology Commercialization
118 8th Street
Troy NY 12180

COPY MAILED

JUN 21 2007

OFFICE OF PETITIONS

In re Application of :
Kane, et al. : DECISION ON PETITION
Application No. 60/837,503 :
Filed: August 14, 2006 :
For: RPI 1079 :

This is a decision on the petition under 37 CFR 1.137(b), filed May 14, 2007 to revive the above-identified application.

The petition is **GRANTED**.

This application became abandoned October 31, 2006 for failure to timely reply to the Notice to File Missing Parts of Provisional Application mailed August 30, 2006. The Notice set a two month shortened statutory period of time for reply. No petition for extension of time in accordance with 37 CFR 1.136 was timely submitted. Notice of Abandonment was mailed May 8, 2007.

A grantable petition pursuant to 37 CFR 1.137(b) must be accompanied by: (1) the required reply to the outstanding Office action or notice, unless previously filed; (2) the petition fee as set forth in 37 C.F.R. § 1.17(m); (3) a statement that the entire delay in filing the required reply from the due date for the reply until the filing of a grantable petition pursuant to 37 C.F.R. § 1.137(b) was unintentional; and (4) any terminal disclaimer (and fee set forth in 37 C.F.R. § 1.20(d)) required pursuant to 37 C.F.R. § 1.137(c).

The instant petition has been reviewed and found in compliance with the provisions of 37 C.F.R. § 1.137(b). Accordingly, the failure to timely submit a proper reply to the Notice is accepted as having been unintentionally delayed.

This application will be forwarded to the Office of Initial Patent Examination for further processing.

Telephone inquiries concerning this matter may be directed to the undersigned at (571) 272-3205.

Alesia M. Brown
Petitions Attorney
Office of Petitions

UNITED STATES PATENT AND TRADEMARK OFFICE

Commissioner for Patents
United States Patent and Trademark Office
P.O. Box 1450
Alexandria, VA 22313-1450
www.uspto.gov

ILLINOIS TOOL WORKS INC.
3600 WEST LAKE AVENUE
PATENT DEPARTMENT
GLENVIEW, IL 60025

COPY MAILED

JAN 16 2008

OFFICE OF PETITIONS

In re Application of

Shawn Dowd

Application No. 60/837,559

Filed: August 14, 2006

Attorney Docket No. 20378.P1

DECISION ON PETITION

This is a decision on the petition under 37 CFR §1.137(b), July 23, 2007, to revive the above-identified application.

The petition is **granted**.

This application became abandoned for failure to respond in a timely manner to the Notice to File Missing Parts of Provisional Application mailed August 25, 2006. The notice set a shortened period for reply of two months from its mailing date. Extensions of time were available pursuant to 37 CFR 1.136(a). No response was received within the allowable period and the application became abandoned in October 26, 2006. A Notice of Abandonment was mailed May 7, 2007.

The Application Data Sheet filed July 23, 2007, is noted.

A provisional application may be revived so as to be pending for a period no longer than twelve months from its filing date. See 35 USC 11(b)(5). This application is now expired as a matter of law.

It is not apparent whether the person signing the statement of unintentional delay was in a position to have firsthand or direct knowledge of the facts and circumstances of the delay at issue. Nevertheless, such statement is being treated as having been made as the result of a reasonable inquiry into the facts and circumstances of such delay. See 37 CFR 10.18(b) and Changes to Patent Practice and Procedure; Final Rule Notice, 62 Fed. Reg. 53131, 53178 (October 10, 1997), 1203 Off. Gaz. Pat. Office 63, 103 (October 21, 1997). In the event that such an inquiry has not been made, petitioner must make such an inquiry. If such inquiry results in the discovery that it is not correct that the entire delay in filing the required reply from the due date for the reply until the filing of a grantable petition pursuant to 37 CFR 1.137(b) was unintentional, petitioner must notify the Office.

There is no indication that the person signing the instant petition was ever given a power of attorney or authorization of agent to prosecute the above-identified application. If the person signing the instant petition desires to receive future correspondence regarding this application, the appropriate power of attorney or authorization of agent must be submitted. While a courtesy copy of this decision is being mailed to the person signing the instant petition, all future correspondence will be directed to the address of currently of record until such time as appropriate instructions are received to the contrary.

Telephone inquiries concerning this decision may be directed to the undersigned at (571) 272-3222.

Kenya A. McLaughlin
Petitions Attorney
Office of Petitions

cc:
Dennis M. Flaherty
Ostrager Chong Flaherty & Broitman, PC
570 Lexington Avenue
New York, NY 10022-6894

UNITED STATES PATENT AND TRADEMARK OFFICE

Commissioner for Patents
United States Patent and Trademark Office
P.O. Box 1450
Alexandria, VA 22313-1450
www.uspto.gov

SOFER & HAROUN, LLP
SUITE 910
317 MADISON AVENUE
NEW YORK, NY 10017

COPY MAILED

DEC 19 2007

OFFICE OF PETITIONS

In re Application of	:	
Ghassabian Firooz	:	
Application No. 60/837,950	:	ON PETITION
Filed: August 15, 2006	:	
Attorney Docket No. 676-037C2	:	

This is a decision on the petition under 37 CFR 1.137(b), filed August 31, 2007, to revive the above-identified application.

The petition is **GRANTED**.

The above-identified application became abandoned for failure to reply in a timely manner to the Notice of Missing Requirements (Notice) mailed August 28, 2006. The Notice set a period for reply of two (2) months from the mail date of the Notice. No extension of time under the provisions of 37 CFR 1.136(a) were obtained. Accordingly, the above-identified application became abandoned on October 29, 2006.

Telephone inquiries concerning this decision should be directed to Irvin Dingle at (571) 272-3210.

This matter is being referred to the Initial Patent Examination Unit.

Irvin Dingle
Petitions Examiner
Office of Petitions

UNITED STATES PATENT AND TRADEMARK OFFICE

Commissioner for Patents
United States Patent and Trademark Office
P.O. Box 1450
Alexandria, VA 22313-1450
www.uspto.gov

JONES DAY
222 EAST 41ST ST
NEW YORK NY 10017

COPY MAILED

APR 23 2008

In re Application of
Vedapuram Achutharaman et al.
Application No. 60/838,244
Filed: August 16, 2006
Attorney Docket No. 11653-013-888

: DECISION GRANTING PETITION

This is a decision on the petition filed December 12, 2007 under 37 CFR 1.10(c), requesting that the above-identified application be accorded a filing date of August 16, 2006 rather than the presently accorded filing date of August 18, 2006. The petition is treated under 37 CFR 1.10(d).

Petitioners acknowledge that the date of the deposit in Express Mail shown on petitioners' Express Mail receipt is August 18, 2006, but argue that the application was actually deposited with the USPS on August 16, 2006.

In support of the petition seeking to have August 16, 2006 accorded as the filing date, petitioners have provided an email generated from the USPS Internet Track & Confirm Database which shows an acceptance date of August 16, 2006 2005 at 6:10pm.

The evidence provided corroborates that the item bearing Express Mail Label No. EV686024379US was presented for mailing on August 16, 2006 and not on August 18, 2006. In view thereof, it is concluded that the application is entitled to a filing date of August 16, 2006.

The petition is **GRANTED**. In view thereof, no petition fees are due and none have been charged.

This matter is being referred to the Office of Patent Application Processing for correction of the filing date to August 16, 2006 and not August 18, 2006, and for issuance of a corrected filing receipt.

Telephone inquiries related to this matter should be directed to the undersigned Petitions Attorney at (571) 272-3212.

Patricia Faison-Ball

Patricia Faison-Ball
Senior Petitions Attorne
Office of Petitions

UNITED STATES PATENT AND TRADEMARK OFFICE

Commissioner for Patents
United States Patent and Trademark Office
P.O. Box 1450
Alexandria, VA 22313-1450
www.uspto.gov

MARC M. GROZ
S-1602
1450 Washington Blvd.
Stamford CT 06902

COPY MAILED

DEC 28 2006

OFFICE OF PETITIONS

In re Application of :
Groz et al. :
Application No. 60/839,239 :
Filed: 08/22/2006 :
Attorney Docket No. TH-2006-001 :

ON PETITION

This is a decision on the petition filed on November 7, 2006, requesting that the Office accord the above-identified provisional application a filing date of August 22, 2006.

On August 22, 2006, applicants deposited the above-identified provisional application without drawings. On September 7, 2006, the Office of Initial Patent Examination mailed a "Notice of Incomplete Provisional Application," indicating that the application had not been accorded a filing date because the application had been deposited without drawings, and stating that the filing date would be the date of receipt of the omitted drawings.

As stated in MPEP § 601.01(f), it is the practice of the USPTO to treat a provisional application that contains at least some disclosure of a process or method as an application for which a drawing is <u>not</u> necessary for an understanding of the invention under 35 U.S.C. 113 (first sentence).

MPEP § 601.01(f) also states:

> A nonprovisional application having at least one claim, or a provisional application having at least some disclosure, directed to the subject matter discussed above for which a drawing is usually not considered essential for a filing date, describing drawing figure(s) in the specification, but filed without drawings will be treated as an application filed without all of the drawing figures referred to in the specification as discussed in MPEP § 601.01(g), so long as the application contains something that can be construed as a written description and the names of all the inventors.

This application contains method claims. Therefore, the application should have been treated as an application filed without all of the drawing figures referred to in the specification as discussed in MPEP § 601.01(g). MPEP § 601.01(g) states that if an application is filed without all of the drawing figure(s) referred to in the specification, a "Notice of Omitted Item(s)" is mailed, indicating that the application has been accorded a filing date, but is lacking some of the figures of drawings described in the specification.

In view of the above, the Notice of Incomplete Provisional Application was sent in error. The above-identified application may be accorded a filing date of August 22, 2006, without any drawings.

Accordingly, the petition is granted to the extent indicated above.

The $400.00 petition fee is unnecessary and will be refunded to the credit card.

The Office of Initial Patent Examination is directed to accord the application a filing date of August 22, 2006, with "0" sheets of drawings. The one drawing sheet (Figure 1) submitted on November 7, 2006, will not be entered.

Any inquiries regarding to this decision should be directed to the undersigned at (571) 272-3211.

C. T. Donnell

Christina Tartera Donnell
Senior Petitions Attorney
Office of Petitions

UNITED STATES PATENT AND TRADEMARK OFFICE

Commissioner for Patents
United States Patent and Trademark Office
P.O. Box 1450
Alexandria, VA 22313-1450
www.uspto.gov

SNELL & WILMER LLP (OC)
600 ANTON BOULEVARD
SUITE 1400
COSTA MESA, CA 92626

COPY MAILED

MAR 14 2007

OFFICE OF PETITIONS

In re Application of Hinnrichs :
Application No. 60/839,894 : Decision on Petition
Filing Date: August 24, 2006 :
Attorney Docket No. 50637-0150 :

This is a decision in response to the petition filed September 19, 2006, requesting, in effect, that Figure 1 filed on September 19, 2006, be entered as part of the original disclosure.

The petition is **granted**.

The application was filed August 24, 2006.

The Office of Initial Patent Examination mailed a "Notice of Omitted Item(s)" on September 19, 2006. The Notice stated Figure 1 did not appear to be part of the application as filed.

In response, the present petition was filed. Petitioner alleges Figure 1 was filed with the original application.

The USPTO file for this application includes only 3 sheets of drawings. The file does not contain all 4 sheets, including the drawing sheet with Figure 1, petitioner alleges were filed with the original application. However, petitioner has submitted a postcard receipt acknowledging receipt of 4 sheets of drawings on August 24, 2006.[1] Therefore, the Office is persuaded that the drawing sheet containing Figure 1 was part of the originally filed application but was later misplaced by the Office.

The Notice mailed September 19, 2006, was sent in error and is hereby vacated.

No petition fee is required and none has been charged.

[1] Evidence of receipt of any correspondence filed in the Patent and Trademark Office can be obtained by submitting a self addressed post card properly itemizing and identifying the paper or papers being filed. Upon receipt of the correspondence, the Patent and Trademark Office will check the listing on the post card against the papers submitted, making sure that all items listed are present and will then stamp the postcard with an Official date stamp and place the post card in the outgoing mail. "A post card receipt which itemizes and properly identifies the papers which are being filed serves as *prima facie* evidence of receipt in the PTO of all items listed thereon by the PTO." M.P.E.P. § 503.

The Office of Initial Patent Examination will be informed of the instant decision and will process the application with a filing date of August 24, 2006, using the papers filed August 24, 2006, and the drawings sheet containing Figure 1 filed September 19, 2006.

Telephone inquiries regarding this communication should be directed to Petitions Attorney Steven Brantley at (571) 272-3203.

Charles Steven Brantley
Senior Petitions Attorney
Office of Petitions

UNITED STATES PATENT AND TRADEMARK OFFICE

Commissioner for Patents
United States Patent and Trademark Office
P.O. Box 1450
Alexandria, VA22313-1450
www.uspto.gov

DOUGLAS S. BISHOP, ESQ.
BISHOP & HEINTZ, P.C.
440 WEST FRONT AT OAK STREET
P.O. BOX 707
TRAVERSE CITY, MI 49685

COPY MAILED

AUG 30 2007

OFFICE OF PETITIONS

ON PETITION

In re Application of
Daniel G. Korson
Application No. 60/840,069
Filed: August 24, 2006
Title of Invention: CHUCK HOLDER INCORPORTATING INDEPENDENT ARRAYED WEDGE CLAMPS FOR CLAMPING SUCH AS IRREGULARLY SHAPED PARTS WITH A MINIMUM OF DEFORMATION

This is a decision on the petition filed May 25, 2007 under 37 CFR 1.137(b)[1], to revive the above-identified application.

The petition is **GRANTED**.

The instant application became abandoned on November 14, 2006, for failure to timely reply to the Notice to File Missing Parts, mailed September 13, 2006, which set a two (2) month shortened statutory period for reply. No extensions of the time for reply in accordance with 37 CFR 1.136(a) were obtained prior to the expiration of the period for reply. Accordingly, a Notice of Abandonment was mailed May 21, 2007.

The submission of the filing fee, and the surcharge for its late filing, as required by the Notice to File Missing Parts mailed September 13, 2006 is acknowledged.

All other requirements having been met , this application is being forwarded to the Office of Initial Patent Examination for further pre-examination processing.

Telephone inquiries concerning this matter may be directed to the undersigned Petitions Attorney at (571) 272-3212.

Patricia Faison-Ball

Patricia Faison-Ball
Senior Petitions Attorney
Office of Petitions

---

[1] Effective December 1, 1997, the provisions of 37 CFR 1.137(b) now provide that where the delay in reply was unintentional, a petition may be filed to revive an abandoned application or a lapsed patent pursuant to 37 CFR 1.137(b). A grantable petition filed under the provisions of 37 CFR 1.137(b) must be accompanied by:

(1) the required reply, unless previously filed. In a nonprovisional application abandoned for failure to prosecute, the required reply may be met by the filing of a continuing application. In an application or patent, abandoned or lapsed for failure to pay the issue fee or any portion thereof, the required reply must be the payment of the issue fee or any outstanding balance thereof.

(2) the petition fee as set forth in 37 CFR 1.17(m);

(3) a statement that the entire delay in filing the required reply from the due date for the reply until the filing of a grantable petition pursuant to 37 CFR 1.137(b) was unintentional. The Commissioner may required additional information where there is a question whether the delay was unintentional; and

(4) any terminal disclaimer (and fee as set forth in 37 CFR 1.20(d)) required pursuant to 37 CFR 1.137(c)).

UNITED STATES PATENT AND TRADEMARK OFFICE

Commissioner for Patents
United States Patent and Trademark Office
P.O. Box 1450
Alexandria, VA 22313-1450
www.uspto.gov

KENNETH JACOBSEN
PO BOX 14397
FREMONT CA 94539

COPY MAILED

JUN 26 2007

OFFICE OF PETITIONS

In re Application of Jacobsen, et al. Application No. 60/840,130 Filed: August 24, 2006 Title: File Management and Display System with Configurable Icons and Sorting Discriminators	: : : : :	ON PETITION

This is a decision on the petition to withdraw the holding of abandonment under 37 CFR 1.181, filed June 7, 2007.

The petition under 37 CFR 1.181 is **DISMISSED**.

Any request for reconsideration of this decision must be submitted within **TWO (2) MONTHS** from the mail date of this decision. The reconsideration request should include a cover letter entitled "Renewed Petition under 37 CFR 1.181". Extensions of time under 37 CFR 1.136(a) are permitted. No fee is required for a renewed petition.

The above-identified application became abandoned for failure to timely file a reply in response to the Notice to File Missing Parts of Provisional Application, mailed September 13, 2006. This Office action set an extendable period for reply of two (2) months for applicant to submit a provisional application sheet, together with a surcharge for its late filing. No reply having been received, the application became abandoned on November 14, 2006. A Notice of Abandonment was mailed on May 21, 2007.

To establish nonreceipt of an Office action, a petitioner must: 1) include a statement that the Office action was not received; 2) attest to the fact that a search of the file jacket and docket records indicates that the Office action was not received; and 3) include a copy of the docket record where the nonreceived Office action would have been entered had it been received and docketed.[1] A proper docket report consists of a "docket record where the nonreceived Office action would have been entered had it been received and docketed."[2] "For example, if a three month period for reply was set in the nonreceived Office action, a copy of the docket record showing all replies docketed for a date three months from the mail date of the nonreceived Office action must be submitted..."[3]

Here, petitioner stated that he notes obligations as a calendar entry in Microsoft Outlook. Accordingly, the Office requests that petitioner supply print-outs of the said calendar entries, covering the appropriate period.

While the showing of record is not sufficient to presently merit withdrawing the holding of abandonment, petitioner is not precluded from obtaining relief by filing a petition pursuant to 37 CFR 1.137(b) on the basis of unintentional delay. A grantable petition pursuant to 37 CFR 1.137(b) must be accompanied by (1) The reply required to the outstanding Office action or notice, unless previously filed; (2) The petition fee as set forth in 37 CFR 1.17(m), currently $750 for a small entity; and (3) A statement that the entire delay in filing the required reply from the due date for the reply until the filing of a grantable petition pursuant to this paragraph was unintentional.

Further correspondence with respect to this matter should be addressed as follows:

By mail: Mail Stop Petitions
Commissioner for Patents
P.O. Box 1450
Alexandria VA 22313-1450

By FAX: (571) 273-8300
Attn: Office of Petitions

---

[1] See MPEP 711.03(c)(II).

[2] MPEP 711.03(c)(II) (emphasis added).

[3] Id.

Telephone inquiries related to this decision should be directed to the undersigned at (571)272-3207.

Cliff Congo
Petitions Attorney
Office of Petitions

Enc: PTO/SB/64 (3 pages)

PTO/SB/64 (04-07)
Approved for use through 09/30/2007. OMB 0651-0031
U.S. Patent and Trademark Office; U.S. DEPARTMENT OF COMMERCE
Under the Paperwork Reduction Act of 1995, no persons are required to respond to a collection of information unless it displays a valid OMB control number.

PETITION FOR REVIVAL OF AN APPLICATION FOR PATENT ABANDONED UNINTENTIONALLY UNDER 37 CFR 1.137(b)

Docket Number (Optional)

First named inventor:

Application No.: Art Unit:

Filed: Examiner:

Title:

Attention: Office of Petitions
Mail Stop Petition
Commissioner for Patents
P.O. Box 1450
Alexandria, VA 22313-1450
FAX (571) 273-8300

NOTE: If information or assistance is needed in completing this form, please contact Petitions Information at (571) 272-3282.

The above-identified application became abandoned for failure to file a timely and proper reply to a notice or action by the United States Patent and Trademark Office. The date of abandonment is the day after the expiration date of the period set for reply in the office notice or action plus an extensions of time actually obtained.

APPLICANT HEREBY PETITIONS FOR REVIVAL OF THIS APPLICATION

NOTE: A grantable petition requires the following items:
(1) Petition fee;
(2) Reply and/or issue fee;
(3) Terminal disclaimer with disclaimer fee - required for all utility and plant applications filed before June 8, 1995; and for all design applications; and
(4) Statement that the entire delay was unintentional.

1. Petition fee

☐ Small entity-fee $ _____ (37 CFR 1.17(m)). Applicant claims small entity status. See 37 CFR 1.27.

☐ Other than small entity – fee $ _____ (37 CFR 1.17(m))

2. Reply and/or fee

A. The reply and/or fee to the above-noted Office action in the form of _____(identify type of reply):

☐ has been filed previously on _____.
☐ is enclosed herewith.

B. The issue fee and publication fee (if applicable) of $ _____.

☐ has been paid previously on _____.
☐ is enclosed herewith.

This collection of information is required by 37 CFR 1.137(b). The information is required to obtain or retain a benefit by the public which is to file (and by the USPTO to process) an application. Confidentiality is governed by 35 U.S.C. 122 and 37 CFR 1.11 and 1.14. This collection is estimated to take 1.0 hour to complete, including gathering, preparing, and submitting the completed application form to the USPTO. Time will vary depending upon the individual case. Any comments on the amount of time you require to complete this form and/or suggestions for reducing this burden, should be sent to the Chief Information Officer, U.S. Patent and Trademark Office, U.S. Department of Commerce, P.O. Box 1450, Alexandria, VA 22313-1450. DO NOT SEND FEES OR COMPLETED FORMS TO THIS ADDRESS. **SEND TO: Mail Stop Petition, Commissioner for Patents, P.O. Box 1450, Alexandria, VA 22313-1450.**

If you need assistance in completing the form, call 1-800-PTO-9199 and select option 2.

Under the Paperwork Reduction Act of 1995, no persons are required to respond to a collection of information unless it displays a valid OMB control number.

3. Terminal disclaimer with disclaimer fee

☐ Since this utility/plant application was filed on or after June 8, 1995, no terminal disclaimer is required.

☐ A terminal disclaimer (and disclaimer fee (37 CFR 1.20(d)) of $ _____ for a small entity or $ _____ for other than a small entity) disclaiming the required period of time is enclosed herewith (see PTO/SB/63).

4. STATEMENT: The entire delay in filing the required reply from the due date for the required reply until the filing of a grantable petition under 37 CFR 1.137(b) was unintentional. [NOTE: The United States Patent and Trademark Office may require additional information if there is a question as to whether either the abandonment or the delay in filing a petition under 37 CFR 1.137(b) was unintentional (MPEP 711.03(c), subsections (III)(C) and (D)).]

WARNING:

Petitioner/applicant is cautioned to avoid submitting personal information in documents filed in a patent application that may contribute to identity theft. Personal information such as social security numbers, bank account numbers, or credit card numbers (other than a check or credit card authorization form PTO-2038 submitted for payment purposes) is never required by the USPTO to support a petition or an application. If this type of personal information is included in documents submitted to the USPTO, petitioners/applicants should consider redacting such personal information from the documents before submitting them to the USPTO. Petitioner/applicant is advised that the record of a patent application is available to the public after publication of the application (unless a non-publication request in compliance with 37 CFR 1.213(a) is made in the application) or issuance of a patent. Furthermore, the record from an abandoned application may also be available to the public if the application is referenced in a published application or an issued patent (see 37 CFR 1.14). Checks and credit card authorization forms PTO-2038 submitted for payment purposes are not retained in the application file and therefore are not publicly available.

Signature	Date
Typed or printed name	Registration Number, if applicable
Address	Telephone Number
Address	

Enclosures: ☐ Fee Payment

☐ Reply

☐ Terminal Disclaimer Form

☐ Additional sheets containing statements establishing unintentional delay

☐ Other: _____

CERTIFICATE OF MAILING OR TRANSMISSION [37 CFR 1.8(a)]

I hereby certify that this correspondence is being:

☐ Deposited with the United States Postal Service on the date shown below with sufficient postage as first class mail in an envelope addressed to: Mail Stop Petition, Commissioner for Patents, P. O. Box 1450, Alexandria, VA 22313-1450.

☐ Transmitted by facsimile on the date shown below to the United States Patent and Trademark Office at (571) 273-8300.

Date	Signature
	Typed or printed name of person signing certificate

Privacy Act Statement

The **Privacy Act of 1974 (P.L. 93-579)** requires that you be given certain information in connection with your submission of the attached form related to a patent application or patent. Accordingly, pursuant to the requirements of the Act, please be advised that: (1) the general authority for the collection of this information is 35 U.S.C. 2(b)(2); (2) furnishing of the information solicited is voluntary; and (3) the principal purpose for which the information is used by the U.S. Patent and Trademark Office is to process and/or examine your submission related to a patent application or patent. If you do not furnish the requested information, the U.S. Patent and Trademark Office may not be able to process and/or examine your submission, which may result in termination of proceedings or abandonment of the application or expiration of the patent.

The information provided by you in this form will be subject to the following routine uses:

1. The information on this form will be treated confidentially to the extent allowed under the Freedom of Information Act (5 U.S.C. 552) and the Privacy Act (5 U.S.C 552a). Records from this system of records may be disclosed to the Department of Justice to determine whether disclosure of these records is required by the Freedom of Information Act.
2. A record from this system of records may be disclosed, as a routine use, in the course of presenting evidence to a court, magistrate, or administrative tribunal, including disclosures to opposing counsel in the course of settlement negotiations.
3. A record in this system of records may be disclosed, as a routine use, to a Member of Congress submitting a request involving an individual, to whom the record pertains, when the individual has requested assistance from the Member with respect to the subject matter of the record.
4. A record in this system of records may be disclosed, as a routine use, to a contractor of the Agency having need for the information in order to perform a contract. Recipients of information shall be required to comply with the requirements of the Privacy Act of 1974, as amended, pursuant to 5 U.S.C. 552a(m).
5. A record related to an International Application filed under the Patent Cooperation Treaty in this system of records may be disclosed, as a routine use, to the International Bureau of the World Intellectual Property Organization, pursuant to the Patent Cooperation Treaty.
6. A record in this system of records may be disclosed, as a routine use, to another federal agency for purposes of National Security review (35 U.S.C. 181) and for review pursuant to the Atomic Energy Act (42 U.S.C. 218(c)).
7. A record from this system of records may be disclosed, as a routine use, to the Administrator, General Services, or his/her designee, during an inspection of records conducted by GSA as part of that agency's responsibility to recommend improvements in records management practices and programs, under authority of 44 U.S.C. 2904 and 2906. Such disclosure shall be made in accordance with the GSA regulations governing inspection of records for this purpose, and any other relevant (*i.e.*, GSA or Commerce) directive. Such disclosure shall not be used to make determinations about individuals.
8. A record from this system of records may be disclosed, as a routine use, to the public after either publication of the application pursuant to 35 U.S.C. 122(b) or issuance of a patent pursuant to 35 U.S.C. 151. Further, a record may be disclosed, subject to the limitations of 37 CFR 1.14, as a routine use, to the public if the record was filed in an application which became abandoned or in which the proceedings were terminated and which application is referenced by either a published application, an application open to public inspection or an issued patent.
9. A record from this system of records may be disclosed, as a routine use, to a Federal, State, or local law enforcement agency, if the USPTO becomes aware of a violation or potential violation of law or regulation.

UNITED STATES PATENT AND TRADEMARK OFFICE

UNITED STATES DEPARTMENT OF COMMERCE
United States Patent and Trademark Office
Address: COMMISSIONER FOR PATENTS
P.O. Box 1450
Alexandria, Virginia 22313-1450
www.uspto.gov

APPL NO.	FILING OR 371 (c) DATE	ART UNIT	FIL FEE REC'D	ATTY.DOCKET NO	DRAWINGS	TOT CLMS	IND CLMS
60/840,208	08/24/2006		100	32006/40	7		

CONFIRMATION NO. 7683

CORRECTED FILING RECEIPT

OC000000020611346

1912
AMSTER, ROTHSTEIN & EBENSTEIN LLP
90 PARK AVENUE
NEW YORK, NY 10016

Date Mailed: 09/28/2006

Receipt is acknowledged of this provisional Patent Application. It will not be examined for patentability and will become abandoned not later than twelve months after its filing date. Be sure to provide the U.S. APPLICATION NUMBER, FILING DATE, NAME OF APPLICANT, and TITLE OF INVENTION when inquiring about this application. Fees transmitted by check or draft are subject to collection. Please verify the accuracy of the data presented on this receipt. **If an error is noted on this Filing Receipt, please mail to the Commissioner for Patents P.O. Box 1450 Alexandria Va 22313-1450. Please provide a copy of this Filing Receipt with the changes noted thereon. If you received a "Notice to File Missing Parts" for this application, please submit any corrections to this Filing Receipt with your reply to the Notice. When the USPTO processes the reply to the Notice, the USPTO will generate another Filing Receipt incorporating the requested corrections (if appropriate).**

Applicant(s)

Jerry R. Patton, Bridgeport, AL;
Robert W. Alverson, Soddy-Daisy, TN;

Power of Attorney:

Craig Arnold--34287

If Required, Foreign Filing License Granted: 09/13/2006

The country code and number of your priority application, to be used for filing abroad under the Paris Convention, is US60/840,208

Projected Publication Date: None, application is not eligible for pre-grant publication

Non-Publication Request: Not applicable

Early-Publication Request: Not applicable

**** SMALL ENTITY ****

Title

Aluminum chelates

PROTECTING YOUR INVENTION OUTSIDE THE UNITED STATES

Since the rights granted by a U.S. patent extend only throughout the territory of the United States and have no effect in a foreign country, an inventor who wishes patent protection in another country must apply for a patent in a specific country or in regional patent offices. Applicants may wish to consider the filing of an international application under the Patent Cooperation Treaty (PCT). An international (PCT) application generally has the same effect as a regular national patent application in each PCT-member country. The PCT process **simplifies** the filing of patent applications on the same invention in member countries, but **does not result** in a grant of "an international patent" and does not eliminate the need of applicants to file additional documents and fees in countries where patent protection is desired.

Almost every country has its own patent law, and a person desiring a patent in a particular country must make an application for patent in that country in accordance with its particular laws. Since the laws of many countries differ in various respects from the patent law of the United States, applicants are advised to seek guidance from specific foreign countries to ensure that patent rights are not lost prematurely.

Applicants also are advised that in the case of inventions made in the United States, the Director of the USPTO must issue a license before applicants can apply for a patent in a foreign country. The filing of a U.S. patent application serves as a request for a foreign filing license. The application's filing receipt contains further information and guidance as to the status of applicant's license for foreign filing.

Applicants may wish to consult the USPTO booklet, "General Information Concerning Patents" (specifically, the section entitled "Treaties and Foreign Patents") for more information on timeframes and deadlines for filing foreign patent applications. The guide is available either by contacting the USPTO Contact Center at 800-786-9199, or it can be viewed on the USPTO website at http://www.uspto.gov/web/offices/pac/doc/general/index.html.

For information on preventing theft of your intellectual property (patents, trademarks and copyrights), you may wish to consult the U.S. Government website, http://www.stopfakes.gov. Part of a Department of Commerce initiative, this website includes self-help "toolkits" giving innovators guidance on how to protect intellectual property in specific countries such as China, Korea and Mexico. For questions regarding patent enforcement issues, applicants may call the U.S. Government hotline at 1-866-999-HALT (1-866-999-4158).

LICENSE FOR FOREIGN FILING UNDER
Title 35, United States Code, Section 184
Title 37, Code of Federal Regulations, 5.11 & 5.15

GRANTED

The applicant has been granted a license under 35 U.S.C. 184, if the phrase "IF REQUIRED, FOREIGN FILING LICENSE GRANTED" followed by a date appears on this form. Such licenses are issued in all applications where the conditions for issuance of a license have been met, regardless of whether or not a license may be required as set forth in 37 CFR 5.15. The scope and limitations of this license are set forth in 37 CFR 5.15(a) unless an earlier license has been issued under 37 CFR 5.15(b). The license is subject to revocation upon written notification. The date indicated is the effective date of the license, unless an earlier license of similar scope has been granted under 37 CFR 5.13 or 5.14.

This license is to be retained by the licensee and may be used at any time on or after the effective date thereof unless it is revoked. This license is automatically transferred to any related applications(s) filed under 37 CFR 1.53(d). This license is not retroactive.

The grant of a license does not in any way lessen the responsibility of a licensee for the security of the subject matter as imposed by any Government contract or the provisions of existing laws relating to espionage and the national security or the export of technical data. Licensees should apprise themselves of current regulations especially with respect to certain countries, of other agencies, particularly the Office of Defense Trade Controls, Department of State (with respect to Arms, Munitions and Implements of War (22 CFR 121-128)); the Bureau of Industry and Security, Department of Commerce (15 CFR parts 730-774); the Office of Foreign Assets Control, Department of Treasury (31 CFR Parts 500+) and the Department of Energy.

NOT GRANTED

No license under 35 U.S.C. 184 has been granted at this time, if the phrase "IF REQUIRED, FOREIGN FILING LICENSE GRANTED" DOES NOT appear on this form. Applicant may still petition for a license under 37 CFR 5.12, if a license is desired before the expiration of 6 months from the filing date of the application. If 6 months has lapsed from the filing date of this application and the licensee has not received any indication of a secrecy order under 35 U.S.C. 181, the licensee may foreign file the application pursuant to 37 CFR 5.15(b).

UNITED STATES PATENT AND TRADEMARK OFFICE

Commissioner for Patents
United States Patent and Trademark Office
P.O. Box 1450
Alexandria, VA 22313-1450
www.uspto.gov

WENDEROTH, LIND & PONACK, L.L.P.
2033 K STREET N.W.
SUITE 800
WASHINGTON DC 20006-1021

COPY MAILED

APR 0 4 2008

OFFICE OF PETITIONS

In re Application of :
John Fang et al :
Application No. 60/840,440 : ON PETITION
Filed: August 28, 2006 :
Attorney Docket No. PR06 1446A :

This is a decision on the petition under the unintentional provisions of 37 CFR 1.137(b), filed July 25, 2007, to revive the above-identified application.

The petition is **DISMISSED**.

Any request for reconsideration of this decision must be submitted within TWO (2) MONTHS from the mail date of this decision. Extensions of time under 37 CFR 1.136(a) are permitted. The reconsideration request should include a cover letter entitled "Renewed Petition under 37 CFR 1.137(b)." This is **not** a final agency action within the meaning of 5 U.S.C. § 704.

The application became abandoned for failure to reply in a timely manner to the Notice To File Missing Parts Of Provisional Application (Notice) mailed September 14, 2006.

A grantable petition under 37 CFR 1.137(b) must be accompanied by: (1) the required reply, unless previously filed; (2) the petition fee as set forth in 37 CFR 1.17(m); (3) a statement that the entire delay in filing the required reply from the due date for the reply until the filing of a grantable petition pursuant to 37 CFR 1.137(b) was unintentional; and (4) any terminal disclaimer (and fee as set forth in 37 CFR 1.20(d)) required by 37 CFR 1.137(d). Where there is a question as to whether either the abandonment or the delay in filing a petition under 37 CFR 1.137 was unintentional, the Director may require additional information. See MPEP 711.03(c)(II)(C) and (D). The instant petition lacks item(s) (1).

The names of the inventors, either city and state or city and foreign country of the residence of each inventor was not submitted on an provisional application cover sheet under 37 CFR

1.51(c)(1), which may be an application date sheet (37 CFR 1.76), as required by the Notice mailed September 14, 2006.

Further correspondence with respect to this matter should be addressed as follows:

By Mail: Mail Stop PETITION
Commissioner for Patents
P. O. Box 1450
Alexandria, VA 22313-1450

By hand: U. S. Patent and Trademark Office
Customer Service Window, Mail Stop Petitions
Randolph Building
401 Dulany Street
Alexandria, VA 22314

The centralized facsimile number is **(571) 273-8300.**

Telephone inquiries concerning this decision should be directed to the undersigned at (571) 272-3208.

Karen Creasy

Karen Creasy
Petitions Examiner
Office of Petitions

UNITED STATES PATENT AND TRADEMARK OFFICE

Commissioner for Patents
United States Patent and Trademark Office
P.O. Box 1450
Alexandria, VA 22313-1450
www.uspto.gov

WENDEROTH, LIND & PONACK, L.L.P.
2033 K STREET N.W.
SUITE 800
WASHINGTON DC 20006-1021

COPY MAILED
AUG 29 2008

In re Application of	:	
John Fang et al	:	
Application No. 60/840,440	:	DECISION ON PETITION
Filed: August 28, 2006	:	
Attorney Docket No. PR06 1446A	:	

This is a decision on the renewed petition under the unintentional provisions of 37 CFR 1.137(b), filed April 9, 2008, to revive the above-identified application.

The petition is **GRANTED**.

This application became abandoned for failure to reply in a timely manner to the Notice To File Missing Parts Of Provisional Application mailed September 14, 2006.

The petition satisfies the requirements of 37 CFR 1.137(b) in that petitioner has supplied (1) the reply in the form of an Application Data Sheet and the required surcharge fee of $50, (2) the petition fee of $1500; and (3) a proper statement of unintentional delay.

Telephone inquiries concerning this decision should be directed to the undersigned at (571) 272-3208.

This application is being referred to the Office of Patent Application Processing for further pre-examination processing.

Karen Creasy

Karen Creasy
Petitions Examiner
Office of Petitions

UNITED STATES PATENT AND TRADEMARK OFFICE

Commissioner for Patents
United States Patent and Trademark Office
P.O. Box 1450
Alexandria, VA 22313-1450
www.uspto.gov

KLAUBER & JACKSON
411 HACKENSACK AVENUE
HACKENSACK, NJ 07601

COPY MAILED
MAR 16 2007
OFFICE OF PETITIONS

In re Application of Kelly et al. Application No. 60/840590 Filing or 371(c) Date: 08/28/2006 Title of Invention: NITRONE COMPOUNDS, PRODRUGS AND PHARMACEUTICAL COMPOSITIONS OF THE SAME TO TREAT HUMAN DISORDERS	: : : : : : : : :	ON PETITION

This Decision is in response to a "Petition for Award of Mailing Date as Application Filing Date", filed November 13, 2006, to accord the application a filing date of August 28, 2006, including one drawing Figure. The petition is properly treated under 37 CFR 1.53(e).

Background

Application papers in the above-identified application were filed on August 28, 2006, using the Express Mail provisions of 37 CFR 1.10. This Office mailed a Notice of Incomplete Nonprovisional Application (Notice) on September 14, 2006, informing Applicant that a filing date had NOT been accorded the application because the application had been deposited without drawings.

The present petition

In response to the Notice, Applicant files the present petition and avers that one page of drawings was submitted with the application papers on August 28, 2006. In support of this assertion Applicant files a copy of the Transmittal Sheet and asserts that the Transmittal Sheet bears the page number 107.

Applicant also requests that the application be accorded a filing date of August 28, 2006, based upon filing the application under the Express Mail provisions of 37 CFR 1.10.

Inclusion of one drawing sheet

Applicable Law, Rules and MPEP

The MPEP provides, in relevant part

> If a receipt for any item (e.g., paper or fee) filed in the USPTO is desired, it may be obtained by enclosing with the paper a self-addressed postcard specifically identifying the item.
>
> The USPTO will stamp the receipt date on the postcard and place it in the outgoing mail. A postcard receipt which itemizes and properly identifies the items which are being filed serves as prima facie evidence of receipt in the USPTO of all the items listed thereon on the date stamped thereon by the USPTO.
>
> The identifying data on the postcard should be so complete as to clearly identify the item for which a receipt is requested.
>
> The postcard receipt will not serve as prima facie evidence of receipt of any item which is not adequately itemized on the postcard. For example, merely listing on the postcard "a complete application" or "patent application" will not serve as a proper receipt for each of the required components of an application (e.g., specification (including claims), drawings (if necessary), oath or declaration and the application filing fee) or missing portions (e.g., pages, sheets of drawings) of an application if one of the components or portion of a component is found to be missing by the USPTO. Each separate component should be specifically and properly itemized on the postcard.

The application file

The USPTO file is the official record of the papers actually received or filed. A review of the application file reveals that this Office did not receive any drawings. The Transmittal Sheet is an indication of what Applicant intended to file - it is not evidence of what was actually filed in an application. As such, Applicant has failed to demonstrate that the application as-filed included one sheet of drawings.

The petition is dismissed without prejudice. It is noted that the transmittal sheet has annotated thereon that a return-receipt postcard was filed with the application. If applicant has a properly itemized and date-stamped postcard evidencing receipt of a drawing sheet by this office on February 28, 2006, Applicant should file a Request for Reconsideration of Petition and include the necessary evidence.

According a Filing Date

A review of the file reveals that the specification contains composition and method claims. As stated in MPEP § 601.01(f), it is the practice of the PTO to treat an application that contains at

least one process, method or composition claim as an application for which a drawing is not necessary for an understanding of the invention under 35 U.S.C. 113 (first sentence).

MPEP § 601.01(f) also states that:

> A nonprovisional application having at least one claim, or a provisional application having at least some disclosure, directed to the subject matter discussed above for which a drawing is usually not considered essential for a filing date, describing drawing figure(s) in the specification, but filed without drawings will be treated as an application filed without all of the drawing figures referred to in the specification as discussed in MPEP § 601.01(g), so long as the application contains something that can be construed as a written description.

This application contains composition and method claims; therefore, the application should have been treated as an application filed without all of the drawing figures referred to in the specification as discussed in MPEP § 601.01(g).

In applications filed without all of the drawing figure(s) referred to in the specification, the MPEP § 601.01(g) states that a "Notice of Omitted Item(s)" is mailed indicating that the application has been accorded a filing date, but is lacking some of the figures of drawings described in the specification.

In view of the above, the Notice mailed September 14, 2006, was mailed in error and is hereby withdrawn.

Request under 37 CFR 1.10

Petitioner alleges that the application was deposited in Express Mail service on August 28, 2006. In support of this assertion, the petition is accompanied by a copy of Express Mail label No. EV748267523US. A review of the Express Mail label, No. EV748267523US, reveals that the "Date In" thereon is August 28, 2006. The same Express Mail label number was placed on the original application papers located in the official file.

In view of the above, the petition is **granted**. No fee has been charged and none is due.

The application is being referred to Scanning Customer Support for correction of the filing date of the correspondence to February 27, 2006,

This application is being referred to the Office of Initial Patent Examination, Customer Corrections, for further processing, with the filing date of August 28, 2006, including an indication that no drawings were present or required on filing, and for the mailing of a Corrected Filing Receipt.

Further correspondence with respect to this matter should be addressed as follows:

By mail: Commissioner for Patents
PO Box 1450
Alexandria, VA 22313-1450

By FAX: (571) 273-8300
Attn: Office of Petitions

By hand: Customer Service Window
Randolph Building
401 Dulany Street
Alexandria, VA 22314

Telephone inquiries concerning this matter should be directed to the undersigned at (571) 272-3232.

Derek L. Woods
Attorney
Office of Petitions

UNITED STATES PATENT AND TRADEMARK OFFICE

Commissioner for Patents
United States Patent and Trademark Office
P.O. Box 1450
Alexandria, VA 22313-1450
www.uspto.gov

FSP LLC
CHARLES A. MIRHO
P.O. BOX 890
VANCOUVER WA 98666-0890

COPY MAILED

JAN 31 2008

OFFICE OF PETITIONS

In re Application of	:
Venk Mutalik et al	:
Application No. 60/840,740	: DECISION GRANTING PETITION
Filed: August 28, 2006	: UNDER 37 CFR 1.137(b)
Attorney Docket No. FSP0366PROV	:

This is a decision on the petition under 37 CFR 1.137(b), filed July 12, 2007, to revive the above-identified application.

The petition is **GRANTED**.

The petition satisfies the conditions for revival pursuant to the provisions of 37 CFR 1.137(b) in that (1) the reply in the form of an Application Data Sheet and Cover Sheet; (2) the petition fee; and (3) the required statement of unintentional delay have been received. Accordingly, the reply to the Notice To File Missing Parts Of Provisional Application of September 21, 2006, is accepted as having been unintentionally delayed.

Telephone inquiries concerning this decision should be directed to the undersigned at (571) 272-3208.

This matter is being referred to the Office of Patent Application Processing.

Karen Creasy
Petitions Examiner
Office of Petitions

UNITED STATES PATENT AND TRADEMARK OFFICE

Commissioner for Patents
United States Patent and Trademark Office
P.O. Box 1450
Alexandria, VA 22313-1450
www.uspto.gov
DIW Jan-07

MARSHALL & MELHORN
FOUR SEAGATE, EIGHT FLOOR
TOLEDO OH 43604

COPY MAILED

JAN 16 2007

OFFICE OF PETITIONS

In re Application of	:	
Smith et al.	:	
Application No. 60/840,783	:	ON PETITION
Filed: 29 August, 2006	:	
Atty Docket No. 1-17148	:	

This is a decision on the paper filed on 19 October, 2006, which is treated as a petition under 37 CFR 1.53 requesting that the above-identified provisional application be accorded a filing date of 29 August, 2006.

The petition is **GRANTED**.

The application was filed on 29 August, 2006, without drawings. Accordingly, on 15 September, 2006, Initial Patent Examination Division mailed a Notice of Incomplete Provisional Application stating that the application had been deposited without drawings.

On 19 October, 2006, the present petition was filed. Petitioners argue that drawings are not necessary for an understanding of the subject matter sought to be patented, and so request that the application be accorded a filing date of 29 August, 2006, without drawings.

As stated in MPEP 601.01(f), it is the practice of the PTO to treat a provisional application that contains at least some disclosure of a process or method as an application for which a drawing is not necessary for an understanding of the invention under 35 U.S.C. 113 (first sentence).

MPEP 601.01(f) also states that:

> A nonprovisional application having at least one claim, or a provisional application having at least some disclosure, directed to the subject matter discussed above for which a drawing is usually not considered essential for a filing date, describing drawing figure(s) in the specification, but

> filed without drawings will be treated as an application filed without all of the drawing figures referred to in the specification as discussed in MPEP 601.01(g), so long as the application contains something that can be construed as a written description and the names of all the inventors.

As a review of the official file reveals that the application includes one (1) method claim. Therefore, this application contains disclosure relating to a process or method.

In view of the above, the "Notice" mailed 15 September, 2006, was mailed in error and is hereby withdrawn.

The application will be processed using the application papers present on filing on 29 August, 2006.

The application is accorded a filing date of 29 August, 2006, without drawings as a part of the original disclosure. The petition fee paid of $400.00 will be credited to counsel's deposit account.

The application is being returned to the Office of Initial Patent Examination for further processing with a filing date of 29 August, 2006, using only the application papers filed on that date.

Telephone inquiries specific to this matter should be directed to the undersigned at 571 272-3231.

DWood

Douglas I. Wood
Senior Petitions Attorney
Office of Petitions

UNITED STATES PATENT AND TRADEMARK OFFICE

Commissioner for Patents
United States Patent and Trademark Office
P.O. Box 1450
Alexandria, VA22313-1450
www.uspto.gov

GIFFORD, KRASS, SPRINKLE,ANDERSON & CITKOWSKI, P.C
PO BOX 7021
TROY MI 48007-7021

COPY MAILED

JUN 13 2007

OFFICE OF PETITIONS

In re Application of	:
Charles Keller	:
Application No. 60/840,804	: DECISION GRANTING PETITION
Filed: August 29, 2006	:
Attorney Docket Number: UTX-11918/38	:

This is a decision on the petition to withdraw the holding of abandonment, filed May 29, 2007, under 37 CFR 1.181, in accordance with the reasoning of the decision in Delgar Inc. v. Schuyler, 172 USPQ 513.

The petition is **GRANTED**.

This application became abandoned for failure to timely respond to a Notice to File Missing Parts mailed September 15, 2006. Accordingly, a Notice of Abandonment was mailed May 22, 2007.

The file record discloses that the Notice to File Missing Parts was mailed September 15, 2006 to the address of record. However, petitioner argues non-receipt as the envelope used for mailing failed to list an addressee.

Additionally, a review of the USPTO files reveal that the office communication was returned to the USPTO by the United States Postal Service on September 25, 2006. The copy of the envelope used for mailing does not appear to have an addressee prominently displayed.

In view of the facts set forth in the petition and the fact that the Notice to File Missing Parts was returned, and since it doesn't appear that any action of the petitioner caused the office communication to not be received, the holding of abandonment is withdrawn. No petition fees are due and none have been charged.

In view of the Application Date Sheet (ADS) having been filed with the instant petition, this matter is being referred to the Office of Initial Patent Examination for further pre-examination processing.

Telephone inquiries related to this decision should be directed to the undersigned Petitions Attorney at (571) 272-3212.

Patricia Faison-Ball

Patricia Faison-Ball
Senior Petitions Attorney
Office of Petitions

UNITED STATES PATENT AND TRADEMARK OFFICE

Commissioner for Patents
United States Patent and Trademark Office
P.O. Box 1450
Alexandria, VA 22313-1450
www.uspto.gov

WEINGARTEN, SCHURGIN, GAGNEBIN
& LEBOVICI LLP
TEN POST OFFICE SQUARE
BOSTON, MA 02109

COPY MAILED

FEB 20 2007

OFFICE OF PETITIONS

In re Application of	:	
Philip Trackman et al	:	
Application No. 60/841,161	:	DECISION GRANTING
Filed: August 30, 2006	:	PETITION
Attorney Docket No. BU-164Xq800	:	

This is a decision on the petition filed October 19, 2006, requesting that the above-identified application be accorded a filing date of August 30, 2006, rather than the presently accorded date of August 31, 2006. The petition is properly treated as a petition under 37 CFR 1.10(d).

Petitioner requests the earlier filing date on the basis that the application was purportedly deposited with Express Mail Service on August 30, 2006 pursuant to 37 CFR 1.10. While the copy of the Express Mail label receipt No. EV559915166US bears a handwritten "date-in" of August 31, 2006, it also includes a USPS receipt date stamp of August 30, 2006. Petitioner is alleging that the date of mailing shown in the "date-in" is a U. S. Postal Service (USPS) error and the correct date of mailing pursuant to 37 CFR 1.10 is August 30, 2006. The same Express Mail label number also appears on the original Provisional Application Cover Sheet of record in the file.

The evidence presented is convincing that the Express Mail package was entrusted to the USPS on August 30, 2006, as shown by the USPS stamped receipt date. Accordingly, this application is entitled to a filing date of August 30, 2006, and has been so accorded. A corrected filing receipt has been mailed under separate cover.

In view of the above, the petition is GRANTED.

Telephone inquiries relating to this decision should be directed to the undersigned at (571) 272-3218.

Frances Hicks
Petitions Examiner
Office of Petitions

UNITED STATES PATENT AND TRADEMARK OFFICE

Commissioner for Patents
United States Patent and Trademark Office
P.O. Box 1450
Alexandria, VA 22313-1450
www.uspto.gov

Floyd D. Rutherford
808 East Cedar St
Bristol TN 37620

COPY MAILED

SEP 17 2007

OFFICE OF PETITIONS

In re Application of
Rutherford et al
Application No. 60/841,254
Filed: August 31, 2006
Title: Owners

ON PETITION

This is a decision on the petition under 37 CFR 1.181 to withdraw the holding of abandonment, filed June 11, 2007.

The petition to withdraw the holding of abandonment is **Dismissed**.

Any request for reconsideration should be filed within **TWO MONTHS** of the mailing date of this decision in order to be considered timely. 37 CFR 1.181(f). This time period may not be extended pursuant to 37 CFR 1.136.

This above-identified application became abandoned for failure to file a response to a Notice to File Missing Parts mailed on September 19, 2006. The Notice to Missing Parts set an extendable two (2) month period for reply. No timely request for extension of time was obtained under the provisions of 37 CFR §1.136(a). Accordingly, this application became abandoned on November 20, 2006. A Notice of Abandonment was mailed on May 23, 2007.

The petition has **not** been reviewed on the merits because the petition provided has not been properly signed.

Pursuant to 37 CFR 1.33, amendments and other papers, except for written assertions pursuant to § 1.27(c)(2)(ii) of this part, filed in the application must be signed by:

(1) A registered attorney or agent of record appointed in compliance with § 1.34(b);

(2) A registered attorney or agent not of record who acts in a representative capacity under the provisions of § 1.34(a);

(3) An assignee as provided for under § 3.71(b) of this chapter; or

(4) All of the applicants (§ 1.41(b)) for patent, unless there is an assignee of the entire interest and such assignee has taken action in the application in accordance with § 3.71 of this chapter.

A review of the petition submitted shows that the petition was not signed by a proper party of interest. A review of the record shows the petition has not been executed by inventor Floyd Rutherford.

Further correspondence with respect to this matter should be addressed as follows:

By mail:	Mail Stop Petition Commissioner for Patents P.O. Box 1450 Alexandria, VA 22313-1450
By facsimile:	(571) 273-8300
By delivery service: (FedEx, UPS, DHL, etc.)	U.S. Patent and Trademark Office Customer Window, Mail Stop Petition Randolph Building 401 Dulany Street Alexandria, VA 22314

Telephone inquiries concerning this matter should be directed to the undersigned at (571) 272-3215.

Charlema R. Grant

Charlema R. Grant
Petitions Attorney
Office of Petitions

UNITED STATES PATENT AND TRADEMARK OFFICE

Commissioner for Patents
United States Patent and Trademark Office
P.O. Box 1450
Alexandria, VA 22313-1450
www.uspto.gov

Kent Barta S.C.
2901 Jonathan Circle
Fitchburg WI 53711

COPY MAILED

AUG 2 4 2007

OFFICE OF PETITIONS

In re Application of :
Baier et al. :
Application No. 60/841296 :
Filing or 371(c) Date: 08/30/2006 :
Attorney Docket Number: :
SI-102 : ON PETITION

This is a decision on the "Petition to Withdraw Holding of Abandonment Under 37 CFR 1.181(a)", filed May 29, 2007.

This Petition is hereby **dismissed**.

Any further petition must be submitted within TWO (2) MONTHS from the mail date of this decision. Extensions of time under 37 CFR 1.136(a) are permitted. The reconsideration request should include a cover letter entitled "Renewed Petition under [insert the applicable code section]." This is **not** final agency action within the meaning of 5 U.S.C. § 704.

Background

The above-identified application became abandoned for failure to timely and properly reply to the Notice to File Missing Parts of Nonprovisional Application ("Notice"), mailed September 15, 2006. The Notice required the application filing fee and a late filing fee surcharge, and set a two (2) month period for reply. Extensions of time were available under 37 CFR 1.136(a). No response having been received, the application became abandoned November 16, 2006. A Notice of Abandonment was mailed May 22, 2007.

The present petition

Applicant files the instant petition and asserts that the application was not in fact abandoned because "[t]he cover sheet accompanying the application clearly indicated that payment of the required filing fee was to be charged to deposit Account No. 503637, even though the corresponding box was inadvertently left blank."

Review of the Coversheet

A review of the coversheet, under the section entitled "Method of Payment of the Filing Fee and Application Size Fee for this Provisional Application for Patent," reveals that the section provided for the following methods of payment, to be indicated by checking the box to the left of the desired method: 1) check or money order; credit card, or deposit account. None of the boxes were checked. Payment by deposit account also required input of the account number, which Applicant included. The section also included a box wherein Applicant could include the "total fee amount". Applicant also inserted the total fee amount, wherein Applicant inserted "$100.00".

Applicable Law, Rules and MPEP

37 CFR § 1.25. Deposit accounts, provides:

> (b) Filing, issue, appeal, international-type search report, international application processing, petition, and post-issuance fees may be charged against these accounts if sufficient funds are on deposit to cover such fees. A general authorization to charge all fees, or only certain fees, set forth in §§ 1.16 to 1.18 to a deposit account containing sufficient funds may be filed in an individual application, either for the entire pendency of the application or with a particular paper filed. An authorization to charge fees under § 1.16 in an international application entering the national stage under 35 U.S.C. § 371 will be treated as an authorization to charge fees under § 1.492. An authorization to charge fees set forth in § 1.18 to a deposit account is subject to the provisions of § 1.311(b). An authorization to charge to a deposit account the fee for a request for reexamination pursuant to § 1.510 or § 1.913 and any other fees required in a reexamination proceeding in a patent may also be filed with the request for reexamination. An authorization to charge a fee to a deposit account will not be considered payment of the fee on the date the authorization to charge the fee is effective as to the particular fee to be charged unless sufficient funds are present in the account to cover the fee.

Analysis and conclusion

The section clearly indicates that, in order for this Office to charge fees to a deposit account, an authorization is required. Applicant's assertion, that there was a clear indication to charge the filing fee, falls short of an authorization to charge the fee. This Office may not charge fees that have not been authorized. Moreover, Applicant was notified that the filing fee had not been charged, and Applicant was provided a time period within which to remedy the inadvertent failure to check the corresponding box. A the Notice to File Missing Parts of Nonprovisional Application (Notice), was mailed to Applicant on September 15, 2006, informing Applicant that the statutory basic filing fee was missing, and that, to avoid abandonment of the application, a surcharge of $25.00, along with the basic filing fee, was required. Applicant was given two (2) months from the mail date of the Notice to provide the filing fee and surcharge. Applicant was also allowed to obtain extensions of time to file the reply to the Notice. No reply was received. Accordingly, the application is properly abandoned.

Alternate venue

Applicant is urged to file a petition stating that the delay was unintentional. Public Law 97-247, § 3, 96 Stat. 317 (1982), which revised patent and trademark fees, amended 35 U.S.C. § 41(a)(7) to provide for the revival of an "unintentionally" abandoned application without a showing that the delay in was "unavoidable." An "unintentional" petition under 37 CFR 1.137(b) must be accompanied by the required fee.

The filing of a petition under 37 CFR 1.137(b) cannot be intentionally delayed and therefore must be filed promptly. A person seeking revival due to unintentional delay can not make a statement that the delay was unintentional unless the entire delay, including the delay from the date it was discovered that the application was abandoned until the filing of the petition to revive under 37 CFR 1.137(b), was unintentional. A statement that the delay was unintentional is not appropriate if petitioner intentionally delayed the filing of a petition for revive under 37 CFR 1.137(b).
Further correspondence with respect to this matter should be addressed as follows:

By mail: Director for Patents
PO Box 1450
Alexandria, VA 22313-1450

By FAX: (571) 273-8300
Attn: Office of Petitions

By hand: Customer Service Window
Randolph Building
401 Dulany Street
Alexandria, VA 22314

Telephone inquiries concerning this matter should be directed to the undersigned at (571) 272-3232.

Derek L. Woods
Attorney
Office of Petitions

UNITED STATES PATENT AND TRADEMARK OFFICE

Commissioner for Patents
United States Patent and Trademark Office
P.O. Box 1450
Alexandria, VA 22313-1450
www.uspto.gov

Kent Barta S.C.
2901 Jonathan Circle
Fitchburg WI 53711

COPY MAILED

NOV 28 2007

OFFICE OF PETITIONS

In re Application of	:	
Baier et al.	:	
Application No. 60/841296	:	
Filing or 371(c) Date: 08/30/2006	:	
Attorney Docket Number:	:	
SI-102	:	ON PETITION

This is a decision on the Petition to Revive the application under 37 CFR 1.137(b)", filed September 20, 2007.

This Petition is hereby **granted**.

Background

The above-identified application became abandoned for failure to timely and properly reply to the Notice to File Missing Parts of Nonprovisional Application ("Notice"), mailed September 15, 2006. The Notice required the application filing fee and a late filing fee surcharge, and set a two (2) month period for reply. Extensions of time were available under 37 CFR 1.136(a). No response having been received, the application became abandoned November 16, 2006. A Notice of Abandonment was mailed May 22, 2007.

Applicant filed a petition to withdraw the holding of abandonment under 37 CFR 1.181, on May 29, 2007, which was dismissed in a Decision mailed August 24,, 2007, for failing to meet the requirements of a grantable petition under 37 CFR 1.181.

The present petition

Applicant files the present petition and petition fee, and a response to the Notice.

The petition satisfies the conditions for revival pursuant to the provisions of 37 CFR 1.137(b) in that the petition includes (1) the reply in the form of the filing fee and surcharge; (2) the petition fee; and (3) the required statement of unintentional delay. Accordingly, the reply is accepted as having been unintentionally delayed.

This application is being referred to the Office of Patent Examination Processing for processing of the reply/fees and for further processing consistent with this Decision, in due course.

Telephone inquiries concerning this decision should be directed to the undersigned at (571) 272-3232.

Derek L. Woods
Attorney
Office of Petitions

UNITED STATES PATENT AND TRADEMARK OFFICE

Commissioner for Patents
United States Patent and Trademark Office
P.O. Box 1450
Alexandria, VA 22313-1450
www.uspto.gov

SONNENSCHEIN NATH & ROSENTHAL LLP
FOR PAULA EVANS
P.O. BOX 061080
WACKER DRIVE STATION, SEARS TOWER
CHICAGO, IL 60606-1080

COPY MAILED

JAN 0 5 2007

OFFICE OF PETITIONS

In re Application of Fournier et al. :
Application No. 60/841,507 :
Filing Date: August 31, 2006 :
Attorney Docket No. 20075630-0009 :

Decision on Petition

This is a decision on the paper filed on November 15, 2006, which is being treated as a petition requesting that the above-identified provisional application be accorded a filing date of August 31, 2006.

The petition is **granted**.

The application was filed August 31, 2006.

On September 18, 2006, a Notice was mailed stating drawings described in the specification did not appear to be included as part of the application filed. The Notice stated a filing date had not been accorded and the filing date would be the date of receipt of drawings.

It is the practice of the PTO to accord a provisional application a filing date if it contains at least some disclosure directed to subject matter for which a drawing is not necessary for an understanding of the invention under 35 U.S.C. 113 (first sentence). See MPEP 601.01(f).

This application contains at least disclosure directed to subject matter not requiring a drawing. Therefore, the application will be accorded the August 31, 2006, filing date without drawings as requested in the petition.

Per 601.01(g), a Notice of Omitted Items rather than a Notice of Incomplete Application should have been mailed. The Notice of Omitted Items would have informed petitioner a filing date had been accorded and that the drawing figures referred to in the specification appeared to be missing.

In view of the above, the "Notice" mailed September 18, 2006, was mailed in error and is hereby withdrawn.

It should be noted that the claims filed in any subsequent non-provisional application will determine whether or not drawings are necessary for that application since the "subject matter

sought to be patented" is determined by the claims in an application. Therefore, the instant decision should not be construed as a determination that drawings will or will not be necessary for a filing date for any future non-provisional applications.

The petition fee of $400 will be credited back to petitioner's credit card.

The substitute specification submitted with the petition will not be entered. A provisional application cannot be amended. Therefore, the provisional application will consist solely of the papers filed August 31, 2006.

The application is being returned to the Office of Initial Patent Examination for further processing with a filing date of August 31, 2006, using the papers filed August 31, 2006, and for indication in USPTO records that "0" sheets of drawings were present on filing.

Telephone inquiries regarding this communication should be directed to Petitions Attorney Steven Brantley at (571) 272-3203.

Charles Steven Brantley
Senior Petitions Attorney
Office of Petitions

UNITED STATES PATENT AND TRADEMARK OFFICE

Commissioner for Patents
United States Patent and Trademark Office
P.O. Box 1450
Alexandria, VA 22313-1450
www.uspto.gov

DELPHINE M. JAMES
2656 SOUTH LOOP WEST #170
HOUSTON TX 77054

COPY MAILED

SEP 20 2007

OFFICE OF PETITIONS

In re Application of	:	
Davis Ray	:	
Application No. 60/841685	:	DECISION
Filing or 371(c) Date: 08/31/2006	:	ON PETITION
Title of Invention:	:	
PORTABLE ENTERTAINMENT TABLE	:	

This is a decision on the Petition to Revive Application for Patent Abandoned Unavoidably Under 37 CFR 1.137(a), or in the alternative, Petition to Revive Patent Application Unintentionally Abandoned Under 37 CFR 1.137(b), filed August 20, 2007.

This Petitions are hereby **dismissed**.

Any further petition to revive the above-identified application must be submitted within TWO (2) MONTHS from the mail date of this decision. Extensions of time under 37 CFR 1.136(a) are permitted. The reconsideration request should include a cover letter entitled "Request for Reconsideration of Petition under [insert the applicable code section]". This is **not** final agency action within the meaning of 5 U.S.C. § 704.

Background

The above-identified application became abandoned for failure to timely and properly reply to the Notice to File Missing Parts of Nonprovisional Application ("Notice"), mailed September 15, 2006. The Notice set a two (2) month period for reply. Extensions of time were available under 37 CFR 1.136(a). No timely and proper reply having been received, the application became abandoned on November 16, 2006. A Notice of Abandonment was mailed May 22, 2007.

The present petitions

Applicant files the present petitions and states that the patent (application) was unavoidably abandoned and in the alternative unintentionally abandoned because the attorney became ill and was in the hospital. Applicant states that a check was cut for this application, but that the PTO has no record of the check on file. Applicant states that the application should have not become abandoned.

A Grantable Petition Under 37 CFR 1.137(a)

A grantable petition pursuant to this paragraph must be accompanied by:

(1) The reply required to the outstanding Office action or notice, unless previously filed;
(2) The petition fee as set forth in § 1.17(m);
(3) A statement that the entire delay in filing the required reply from the due date for the reply until the filing of a grantable petition pursuant to this paragraph was unintentional. The Director may require additional information where there is a question whether the delay was unintentional; and
(4) Any terminal disclaimer (and fee as set forth in § 1.20(d)) required pursuant to paragraph (d) of this section.

The present petition lacks item(s) (1) and (3).

Analysis

As to item (1), Applicant is advised that the Notice required the statutory filing fee of $200.00 and a surcharge of $50.00 for the late filing of the application filing fee.

Applicant asserts that the application included a check, however, Applicant has failed to demonstrate that a check was filed. Applicant has the burden of proof. The MPEP provides:

The MPEP, 711.03(c), Petition To Withdraw Holding of Abandonment Based on Evidence That a Reply Was Timely Mailed or Filed, states:

> 37 CFR 1.10(c) through 1.10(e) and 1.10(g) set forth procedures for petitioning the Director of the USPTO to accord a filing date to correspondence as of the date of deposit of the correspondence as "Express Mail." A petition to withdraw the holding of abandonment relying upon a timely reply placed in "Express Mail" must include an appropriate petition under 37 CFR 1.10(c), (d), (e), or (g) (see MPEP § 513). When a paper is shown to have been mailed to the Office using the "Express Mail" procedures, the paper must be entered in PALM with the "Express Mail" date.
> Similarly, applicants may establish that a reply was filed with a postcard receipt that properly identifies the reply and provides prima facie evidence that the reply was timely filed. See MPEP § 503. For example, if the application has been held abandoned for failure to file a reply to a first Office action, and applicant has a postcard receipt showing that an amendment was timely filed in response to the Office action, then the holding of abandonment should be withdrawn upon the filing of a petition to withdraw the holding of abandonment. When the reply is shown to have been timely filed based on a postcard receipt, the reply must be entered into PALM using the date of receipt of the reply as shown on the post card receipt.
>
> Where a certificate of mailing under 37 CFR 1.8, but not a postcard receipt, is relied upon in a petition to withdraw the holding of abandonment, see 37 CFR 1.8(b) and MPEP § 512. As stated in 37 CFR 1.8(b)(3) the statement that attests to the previous timely mailing or transmission of the correspondence must be on a personal knowledge basis, or to the satisfaction of the Director of the USPTO. If the statement attesting to the

> previous timely mailing is not made by the person who signed the Certificate of Mailing (i.e., there is no personal knowledge basis), then the statement attesting to the previous timely mailing should include evidence that supports the conclusion that the correspondence was actually mailed (e.g., copies of a mailing log establishing that correspondence was mailed for that application). When the correspondence is shown to have been timely filed based on a certificate of mailing, the correspondence is entered into PALM with the actual date of receipt (i.e., the date that the duplicate copy of the papers was filed with the statement under 37 CFR 1.8).
> 37 CFR 1.8(b) also permits applicant to notify the Office of a previous mailing or transmission of correspondence and submit a statement under 37 CFR 1.8(b)(3) accompanied by a duplicate copy of the correspondence when a reasonable amount of time (e.g., more than one month) has elapsed from the time of mailing or transmitting of the correspondence. Applicant does not have to wait until the application becomes abandoned before notifying the Office of the previous mailing or transmission of the correspondence. Applicant should check the private Patent Application Information Retrieval (PAIR) system for the status of the correspondence before notifying the Office. See MPEP § 512.

This section explains that there are two methods under the Patent office rules to demonstrate the timely filing of correspondence (including the payment of fees) with this Office. The first is by the use of Express Mail, using the procedures set forth in 37 CFR 1.10; the second is by including a certification by the sender on the correspondence, certifying to the mailing (or transmission if by facsimile) of the correspondence in accordance with the procedures set forth in 37 CFR 1.8.

In this instance, Applicant asserts that a check was cut for the application; however, Applicant has failed to prove, under 37 CFR 1.10 or 37 CFR 1.8, compliance with 37 CFR 1.10 (filing of the correspondence by Express Mail), or 37 CFR 1.8 (filing of correspondence using the certificate of mail procedures). As such, Applicant has failed to demonstrate that a check was timely sent (within the time period set forth in the Notice), to the PTO.

As to item (**3**), Applicant must provide a showing to the satisfaction of the Director that the entire delay in filing the required reply from the due date for the reply until the filing of a grantable petition pursuant to 37 CFR 1.137(a) was unavoidable. In order to determine whether the delay was unavoidable, the courts have adopted a "reasonably prudent person" standard. The courts have provided that:

> [t]he word 'unavoidable' . . . is applicable to ordinary human affairs, and requires no more or greater care or diligence than is generally used and observed by prudent and careful men in relation to their most important business. It permits them in the exercise of this care to rely upon the ordinary and trustworthy agencies of mail and telegraph, worthy and reliable employees, and such other means and instrumentalities as are usually employed in such important business. If unexpectedly, or through the unforeseen fault or imperfection of these agencies and instrumentalities, there occurs a

failure, it may properly be said to be unavoidable, all other conditions of promptness in its rectification being present.

In re Mattullath, 38 App. D.C. 497, 514-15 (1912)(quoting Ex parte Pratt, 1887 Dec. Comm'r Pat. 31, 32-33 (1887)); see also Winkler v. Ladd, 221 F. Supp. 550, 552, 138 USPQ 666, 167-68 (D.D.C. 1963), aff'd, 143 USPQ 172 (D.C. Cir. 1963); Ex parte Henrich, 1913 Dec. Comm'r Pat. 139, 141 (1913). In addition, decisions on revival are made on a "case-by-case basis, taking all the facts and circumstances into account." Smith v. Mossinghoff, 671 F.2d 533, 538, 213 USPQ 977, 982 (D.C. Cir. 1982). Finally, a petition cannot be granted where a petitioner has failed to meet his or her burden of establishing that the delay was "unavoidable." Haines v. Quigg, 673 F. Supp. 314, 316-17, 5 USPQ2d 1130, 1131-32 (N.D. Ind. 1987).

"The critical phrase 'unless it be shown to the satisfaction of the Commissioner that such delay was unavoidable' has remained unchanged since first enacted in 1861." Smith v. Mossinghoff, 671 F.2d 533, 538, 213 U.S.P.Q. (BNA) 977 (D.C. Cir. 1982). The standard for "unavoidable" delay for reinstating a patent is the same as the unavoidable standard for reviving an application. See Ray v. Lehman, 55 F.3d 606, 608-609, 34 U.S.P.Q.2d (BNA) 1786, 1787 (Fed. Cir. 1995) (citing In re patent No. 4,409,763, 7 U.S.P.Q.2d (BNA) 1798, 1800 (Comm'r Pat. 1990; Smith v. Mossinghoff, 671 F.2d 533, 538, 213 U.S.P.Q. (BNA) 977 (D.C. Cir. 1982). The court in In re Mattullath, accepted the standard which had been proposed by Commissioner Hall which "requires no more or greater care or diligence than is generally used and observed by prudent and careful men in relation to their most important business." In re Mattullath, 38 App. D.C. 497, 514-515 (1912) (quoting Ex parte Pratt, 1887 Dec. Comm'r Pat. 31, 32-33 (1887)). However, "The question of whether an applicant's delay in prosecuting an application was unavoidable [will] be decided on a case-by-case basis, taking all of the facts and circumstances into account."[1] Nonawareness of the content of, or a misunderstanding of, PTO statutes, PTO rules, the MPEP, or Official Gazette notices, does not constitute unavoidable delay.[2]

The statute requires a "showing" by petitioner. Therefore, petitioner has the burden of proof. The decision will be based solely on the written, administrative record in existence. It is not enough that the delay was unavoidable; petitioner must prove that the delay was unavoidable. A petition will not be granted if petitioner provides insufficient evidence to "show" that the delay was unavoidable.

Applicant is further advised that the Patent and Trademark Office must rely on the actions or inactions of duly authorized and voluntarily chosen representatives of the applicant, and

---

[1] Smith v. Mossinghoff, 671 F.2d 533, 538, 213 U.S.P.Q. (BNA) 977 (1982).

[2] See Smith v. Mossinghoff, 671 F.2d 533, 538, 213 U.S.P.Q. (BNA) 977 (Fed. Cir. 1982) (citing Potter v. Dann, 201 U.S.P.Q. (BNA) 574 (D. D.C. 1978) for the proposition that counsel's nonawareness of PTO rules does not constitute "unavoidable" delay)); Vincent v. Mossinghoff, 1985 U.S. Dist. LEXIS 23119, 13, 230 U.S.P.Q. (BNA) 621 (D. D.C. 1985) (Plaintiffs, through their counsel's actions, **or their own**, must be held responsible for having noted the MPEP section and Official Gazette notices expressly stating that the certified mailing procedures outlined in 37 CFR 1.8(a) do not apply to continuation applications.) (Emphasis added).

applicant is bound by the consequences of those actions or inactions. Link v. Wabash, 370 U.S. 626, 633-34 (1962); Huston v. Ladner, 973 F.2d 1564, 1567, 23 USPQ2d 1910, 1913 (Fed. Cir. 1992); see also Haines v. Quigg, 673 F. Supp. 314, 317, 5 USPQ2d 1130, 1132 (D.N. Ind. 1987).

Specifically, petitioner's delay caused by the actions or inactions of his voluntarily chosen representative does not constitute unavoidable delay within the meaning of 35 USC 133 or 37 CFR 1.137(a). Haines v. Quigg, 673 F. Supp. 314, 5 USPQ2d 1130 (D. Ind. 1987); Smith v. Diamond, 209 USPQ 1091 (D.D.C. 1981); Potter v. Dann, 201 USPQ 574 (D.D.C. 1978); Ex parte Murray, 1891 Dec. Comm'r Pat. 130, 131 (Comm'r Pat. 1891). In re Mattullath, 38 App. D.C. 497, 514-15 (1912)(quoting Ex parte Pratt, 1887 Dec. Comm'r Pat. 31, 32-33 (1887)); see also Winkler v. Ladd, 221 F. Supp. 550, 552, 138 USPQ 666, 167-68 (D.D.C. 1963), aff'd, 143 USPQ 172 (D.C. Cir. 1963); Ex parte Henrich, 1913 Dec. Comm'r Pat. 139, 141 (1913).

Analysis

Initially it is noted that the period that must be accounted for is "the due date for the reply until the filing of a grantable petition". In this instance, the period of delay that petitioner must account for begins with the due date for the reply, (the reply was due not later than November 15, 2006), and runs until the filing of a grantable petition (at least until the time this petition was filed). Petitioner asserts that the delay in filing the reply was unavoidable because the attorney was ill and in the hospital. Applicant enclosed with the petition a copy of a note putatively from a Doctor stating that Attorney James was hospitalized September 22, 2006 and released to work without restriction November 3, 2006. The present petition was filed August 20, 2007. Applicant has failed to account for the period of delay from November 3, 2006 to August 20, 2007.

Petitioner/applicant is cautioned to avoid submitting personal information in documents filed in a patent application that may contribute to identity theft. Personal information such as social security numbers, bank account numbers, or credit card numbers (other than a check or credit card authorization form PTO-2038 submitted for payment purposes) is never required by the USPTO to support a petition or an application. If this type of personal information is included in documents submitted to the USPTO, petitioners/applicants should consider redacting such personal information from the documents before submitting them to the USPTO. Petitioner/applicant is advised that the record of a patent application is available to the public after publication of the application (unless a non-publication request in compliance with 37 CFR 1.213(a) is made in the application) or issuance of a patent. Furthermore, the record from an abandoned application may also be available to the public if the application is referenced in a published application or an issued patent (see 37 CFR 1.14). Checks and credit card authorization forms PTO-2038 submitted for payment purposes are not retained in the application file and therefore are not publicly available.

A Grantable Petition Under 37 CFR 1.137(b)

A grantable petition pursuant to this paragraph must be accompanied by:

(1) The reply required to the outstanding Office action or notice, unless previously filed;
(2) The petition fee as set forth in § 1.17(m);
(3) A statement that the entire delay in filing the required reply from the due date for the reply until the filing of a grantable petition pursuant to this paragraph was unintentional. The Director may require additional information where there is a question whether the delay was unintentional; and
(4)Any terminal disclaimer (and fee as set forth in § 1.20(d)) required pursuant to paragraph (d) of this section.

The petition lacks item (1).

Analysis

As to item (1), Applicant is advised that the Notice required the statutory filing fee of $200.00 and a surcharge of $50.00 for the late filing of the application filing fee.

Applicant asserts that the application included a check, however, Applicant has failed to demonstrate that a check was filed. Applicant has the burden of proof. See the discussion above for the showing required to demonstrate the timely filing of correspondence with this Office.

Further correspondence with respect to this matter should be addressed as follows:

By mail: Director for Patents
PO Box 1450
Alexandria, VA 22313-1450

By FAX: (571) 273-8300
Attn: Office of Petitions

By hand: Customer Service Window
Randolph Building
401 Dulany Street
Alexandria, VA 22314

Telephone inquiries concerning this matter should be directed to the undersigned at (571) 272-3232.

Derek L. Woods
Attorney
Office of Petitions

UNITED STATES PATENT AND TRADEMARK OFFICE

Commissioner for Patents
United States Patent and Trademark Office
P.O. Box 1450
Alexandria, VA 22313-1450
www.uspto.gov

DELPHINE M. JAMES
2656 SOUTH LOOP WEST #170
HOUSTON TX 77054

COPY MAILED

JAN 22 2008

OFFICE OF PETITIONS

In re Application of	:	DECISION
Davis Ray	:	ON PETITION
Application No. 60/841685	:	
Filing or 371(c) Date: 08/31/2006	:	
Title of Invention:	:	
PORTABLE ENTERTAINMENT TABLE	:	

This is a decision on the Petition to Revive Patent Application Unintentionally Abandoned Under 37 CFR 1.137(b), filed November 20, 2007.

This Petition is hereby **granted**.

The above-identified application became abandoned for failure to timely and properly reply to the Notice to File Missing Parts of Nonprovisional Application ("Notice"), mailed September 15, 2006. The Notice set a two (2) month period for reply. Extensions of time were available under 37 CFR 1.136(a). No timely and proper reply having been received, the application became abandoned on November 16, 2006. A Notice of Abandonment was mailed May 22, 2007.

A petition to revive the application, filed August 20, 2007, was dismissed in a Decision mailed September 20, 2007, for failing to meet the requirements of a grantable petition.

Applicant files the present petition and response to the Notice. The petition satisfies the conditions for revival pursuant to the provisions of 37 CFR 1.137(b) in that the petition includes (1) the reply; (2) the petition fee; and (3) the required statement of unintentional delay. Accordingly, the reply is accepted as having been unintentionally delayed.

This application is being referred to the Office of Patent Application Processing for processing of the reply to the Notice, and for continued processing in due course.

Telephone inquiries concerning this decision should be directed to the undersigned at (571) 272-3232.

Derek L. Woods
Attorney
Office of Petitions

UNITED STATES PATENT AND TRADEMARK OFFICE

Commissioner for Patents
United States Patent and Trademark Office
P.O. Box 1450
Alexandria, VA 22313-1450
www.uspto.gov

JJGJR.: 12-07

Paper No: __

E I DU PONT DE NEMOURS AND COMPANY
LEGAL PATENT RECORDS CENTER
BARLEY MILL PLAZA 25/1122B
4417 LANCASTER PIKE
WILMINGTON DE 19805

COPY MAILED

JAN 0 7 2008

OFFICE OF PETITIONS

In re Application of
Leck :
Application No. 60/841,844 : DECISION ON PETITION
Filed: 1 September, 2006 :
Attorney Docket No. FL1300USPRV :

This is a decision on the petition filed on 11 May, 2006, and considered under 37 C.F.R. §1.53.

The Office regrets the delay in addressing the matter—the petition was presented to the attorneys in the Office of Petitions only at this writing.

For the reasons set forth below, the petition under 37 C.F.R. §1.53 is **DISMISSED**.

BACKGROUND

The instant application was deposited on 1 September, 2006

On 14 March, 2007, the Office of Initial Patent Examination (OIPE) mailed a Notice of Omitted Items—to wit: "pages 46 and 57 of the specification (description and claims)"—thus, the application had been accorded a filing date without those pages.

OIPE indicated that Petitioner might:

- contend via petition that pages 46 and 57 of the specification (description and claims) had been submitted on deposit and so evidence that condition with the proper supporting documentation (i.e., a date stamped receipt card (see: MPEP §503)) along with a copy of the specification; or

- accept the application as filed.

OIPE set a two- (2-) month period for reply.

As of this writing it is unclear whether Petitioner has, in fact, selected either of those options.

On 11 May, 2007, Petitioner instead submitted the instant petition, including therewith, *inter alia*, what is averred to be a true copy of pages 1 – 62 of the specification (description, claims, abstract), however, while Petitioner contemporaneously averred that substance of the pages were mailed and submitted Petitioner has submitted no date-stamped receipt card in evidence of that submission.

Petitioner encounters two equally fatal problems with the instant petition:

- clearly Petitioner makes no showing as required herein (receipt card); moreover,

- the 11 May, 2007, submission with new matter (pages 46 and 57) and acceptance of a later filing date is, by definition, an attempt to amend a provisional application, however, Petitioner makes that attempt in the face of the explicit bar thereto (see: 37 C.F.R. §1.53(c) and MPEP §506.).

ANALYSIS

A search of the official file reveals that:

- on 1 September, 2006, Petitioner deposited the instant application;

- the Office record reflects that pages 46 and 57 of the specification was missing upon deposit;

- there is no the date-stamped receipt card submitted by Petitioner; rather. Petitioner merely argues (in a one-page petition) that pages 46 and 57 of the specification were submitted in a certain fashion without further support.

It would seem that, at the very least, the process that Petitioner seeks is termed "amendment," and that process is not permitted in the realm of a provisional application.

Petitioner may, if she wishes, file a new provisional application.

Accordingly, the instant petition must be dismissed.

The Notice mailed on 14 March, 2007, was properly sent and will not be disturbed.

CONCLUSION

The petition is **dismissed**; the petition fee will not be refunded because there is no indication as of this writing of error on the part of the Office.

While telephone inquiries regarding this decision may be directed to the undersigned at (571) 272-3214, it is noted that all practice before the Office is in writing (see: 37 C.F.R. §1.2[1]) and the proper authority for action on any matter in this regard are the statutes (35 U.S.C.), regulations (37 C.F.R.) and the commentary on policy (MPEP). Therefore, no telephone discussion may be controlling or considered authority for Petitioner's/Caller's action(s).

John J. Gillon, Jr.
Senior Attorney
Office of Petitions

---

[1] The regulations at 37 C.F.R. §1.2 provide:

§1.2 Business to be transacted in writing.

All business with the Patent and Trademark Office should be transacted in writing. The personal attendance of applicants or their attorneys or agents at the Patent and Trademark Office is unnecessary. The action of the Patent and Trademark Office will be based exclusively on the written record in the Office. No attention will be paid to any alleged oral promise, stipulation, or understanding in relation to which there is disagreement or doubt.

UNITED STATES PATENT AND TRADEMARK OFFICE

Commissioner for Patents
United States Patent and Trademark Office
P.O. Box 1450
Alexandria, VA 22313-1450
www.uspto.gov

LARRY J. HAMILTON
APT. # 141
1195 La HOMA DRIVE
NAPA, CA 94558

COPY MAILED
MAR 16 2007
OFFICE OF PETITIONS

In re Application of	:	
Larry J. Hamilton	:	
Application No. 60/841988	:	
Filing or 371(c) Date: 09/01/2006	:	
For: REAL ESTATE DATA	:	DECISION
ORGANIZER & ACCELERATED	:	ON PETITION
METHOD FOR APPRAISING 2-4	:	
UNIT RESIDENTIAL PROPERTIES	:	

This is a decision on the correspondence filed November 9, 2006, asserting that the application included Exhibit B3 on filing.

The petition is granted.

The application was filed on September 1, 2006. On September 15, 2006, the Office of Initial Patent Examination mailed a Notice of Omitted Items in a Nonprovisional Application (hereinafter "Notice"), informing Applicant that the application had been accorded a filing date; however, Exhibit B3 described in the specification appeared to have been omitted from the application.

Applicant responds with the instant petition and avers that Exhibit B3 was filed in the application on September 1, 2006. In support of this assertion, Applicant files a copy of his return-receipt postcard acknowledging receipt of 10 Exhibits by this Office on September 1, 2006.

"A postcard receipt which itemizes and properly identifies the papers which are being filed serves as *prima facie* evidence of receipt in the PTO of all items listed thereon by the PTO." MPEP § 503.

Accordingly, the petition is granted.

In view of the above, the Notice mailed September 15, 2006, was mailed in error and is hereby withdrawn.

A refund of the petition fee has been scheduled via Treasury Check.

The copy of Exhibit B3, filed with the present petition, will be used for examination purposes.

This application is being forwarded to the Office of Initial Patent Examination, Customer Corrections, for further processing, with the filing date of September 1, 2006, and an indication that Exhibit 3 desribed in the specification was present on September 1, 2006, using Exhibit 3 filed with the present petition on November 9, 2006.

Telephone inquiries concerning this matter should be directed to the undersigned at (571-272-3232.

Derek L. Woods
Attorney
Office of Petitions

UNITED STATES PATENT AND TRADEMARK OFFICE

COMMISSIONER FOR PATENTS
UNITED STATES PATENT AND TRADEMARK OFFICE
P.O. BOX 1450
ALEXANDRIA, VA 22313-1450
www.uspto.gov

Paper No.

OEwaves, Inc.
1010 E. Union St, #101
Pasadena CA 91106

COPY MAILED

MAR 3 1 2008

OFFICE OF PETITIONS

In re Application of :
Maleki et al. :
Application No. 60/842,008 : DECISION ON PETITION
Filed: September 1, 2006 :
Attorney Docket No. OE 095 :

This is a decision on the "PETITION TO CORRECT FILING DATE UNDER 37 CFR §1.10(C)," filed December 10, 2007, requesting that the above-identified application be accorded a filing date of September 1, 2006, rather than the presently accorded filing date of September 5, 2006. This also responds to the request to correct the typographical error in the inventors first and last names, as the names were erroneously inverted on the provisional application cover sheet received September 5, 2006.

Petitioner maintains that on September 1, 2006, the application was deposited with the U.S. Postal Service (USPS) in accordance with § 1.10(a). In support thereof, applicant submits copies, inter alia, of the following documents:

- their provisional application cover sheet identifying Express Mail No. EO 924 404 344 US
- a copy of the online customer record mailing label for the Express Mail mailing label used; and
- a copy of the Track/Confirm record from the United States Postal Service for the item mailed under the Express Mail mailing label number used.

Paragraph (a) of 37 CFR 1.10 states that:

> Any correspondence received by the U.S. Patent and Trademark Office (USPTO) that was delivered by the "Express Mail Post Office to Addressee" service of the United States Postal Service (USPS) will be considered filed with the USPTO on the date of deposit with the USPS.

(1) Any correspondence received by the Patent and Trademark Office (Office) that was delivered by the "Express Mail Post Office to Addressee" service of the United States Postal Service (USPS) will be considered filed in the Office on the date of deposit with the USPS.

(2) The date of deposit with USPS is shown by the "date in" on the "Express Mail" label or other official USPS notation. If the USPS deposit date cannot be determined, the correspondence will be accorded the USPTO receipt date as the filing date. See § 1.6(a).

Paragraph (c) of 37 CFR 1.10 states that:

Any person filing correspondence under this section that was received by the Office and delivered by the "Express Mail Post Office to Addressee" service of the USPS, who can show that there is a discrepancy between the filing date accorded by the Office to the correspondence and the date of deposit as shown by the "date-in" on the "Express Mail" mailing label or other official USPS notation, may petition the Director to accord the correspondence a filing date as of the "date-in" on the "Express Mail" mailing label or other official USPS notation, provided that:

(1) The petition is filed promptly after the person becomes aware that the Office has accorded, or will accord, a filing date other than the USPS deposit date;

(2) The number of the "Express Mail" mailing label was placed on the paper(s) or fee(s) that constitute the correspondence prior to the original mailing by "Express Mail;" and

(3) The petition includes a true copy of the "Express Mail" mailing label showing the "date-in," and of any other official notation by the USPS relied upon to show the date of deposit.

The record supports a conclusion that the instant petition was filed promptly within the meaning of § 1.10(c)(1). A review of the application papers presently accorded a filing date of

September 5, 2006, reveals that "Express Mail" mailing label No. EO 924 404 344 US was placed on the provisional application cover sheet, which itemizes the papers being filed therewith, prior to the original mailing.

The petition includes a copy of the online customer record for the "Express Mail" mailing. The petition does not include a copy of the mailing label with the date-in. Nonetheless, the Track & Confirm record for this "Express Mail" package (as restored offline at www.usps.com and supplied by petitioner), reveals that the USPS considered the package enroute on September 1, 2006 at 16:23 at Pasadena CA 91109. The requirement for a true copy of the Express Mail mailing label with the date-in is waived. The USPS record is an official notation that can be relied upon to show the date of deposit. The evidence has been considered and found persuasive that the application was deposited in the Express Mail post office to addressee service of the USPS on September 1, 2006.

In view thereof, the petition is **GRANTED**.

No petition fee is required and none has been charged.

Pursuant to petitioner's notification, the typographical error in the inventor's names has been corrected. This should be shown on the filing receipt sent upon correction of the filing date. Petitioner is reminded that with respect to nonprovisional applications, the Office strongly encourages the filing of an application data sheet or a supplemental application data sheet to correct a typographical or transliteration error in the spelling of an inventor's name. A supplemental oath or declaration is not required. If applicant merely files a statement notifying the Office of the typographical or transliteration error in the spelling of an inventor's name without submitting an application data sheet or a supplemental application data sheet, any patent to issue is less likely to reflect the correct spelling since the spelling of the inventor's name is taken from the oath or declaration, or any subsequently filed application data sheet.

The Office of Patent Application Processing has been advised of this decision. The application is, thereby, forwarded for **correction of the filing date to September 1, 2006** and **issuance of a corrected filing receipt**.

Telephone inquires related to this decision may be directed to the undersigned at (571) 272-3219.

Nancy Johnson
Senior Petitions Attorney
Office of Petitions

UNITED STATES PATENT AND TRADEMARK OFFICE

Commissioner for Patents
United States Patent and Trademark Office
P.O. Box 1450
Alexandria, VA 22313-1450
www.uspto.gov
DIW Jul-07

STEVEN A. BOSSONE, PH.D.
SERONO RESEARCH INSTITUTE
ONE TECHNOLOGY PLACE
ROCKLAND MA 02370

COPY MAILED

JUL 2 0 2007

OFFICE OF PETITIONS

In re Application of	:	
Derek Macallan	:	
Application No. 60/842311	:	DECISION ON PETITION
Filed: 09/05/2006	:	
For: NOVEL COMBINATION OF	:	
AGENTS FOR THE TREATMENT OF	:	
HIV-ASSOCIATED ADIPOSE	:	
REDISTRIBUTION SYNDROME (HARS)	:	

This is a decision on the petition filed on 17 May, 2007, under 37 CFR 1.137(b),[1] to revive the above-identified application.

The petition is **GRANTED**.

The application became abandoned on 6 December, 2006, for failure to timely file a response to the Notice to File Missing Parts of Provisional Application mailed on 5 October, 2006, which set a

---

[1] Effective December 1, 1997, the provisions of 37 CFR 1.137(b) now provide that where the delay in reply was unintentional, a petition may be filed to revive an abandoned application or a lapsed patent pursuant to 37 CFR 1.137(b). A grantable petition filed under the provisions of 37 CFR 1.137(b) must be accompanied by:

(1) the required reply, unless previously filed. In a nonprovisional application abandoned for failure to prosecute, the required reply may be met by the filing of a continuing application. In a nonprovisional utility or plant application filed on or after June 8, 1995, and abandoned for failure to prosecute, the required reply may also be met by the filing of a request for continuing examination in compliance with § 1.114. In an application or patent, abandoned or lapsed for failure to pay the issue fee or any portion thereof, the required reply must be the payment of the issue fee or any outstanding balance thereof. In an application, abandoned for failure to pay the publication fee, the required reply must include payment of the publication fee.

(2) the petition fee as set forth in 37 CFR 1.17(m);

(3) a statement that the entire delay in filing the required reply from the due date for the reply until the filing of a grantable petition pursuant to 37 CFR 1.137(b) was unintentional. The Commissioner may required additional information where there is a question whether the delay was unintentional; and

(4) any terminal disclaimer (and fee as set forth in 37 CFR 1.20(d)) required pursuant to 37 CFR 1.137(c)).

two (2) month shortened period for reply. No extensions of the time for reply in accordance with 37 CFR 1.136(a) were obtained. The filing of the present petition precedes the mailing of Notice of Abandonment.

Petitioner has filed an Application Data Sheet (ADS) and the $50.00 surcharge as the required reply.

An extension of time under 37 CFR 1.136 must be filed prior to the expiration of the maximum extendable period for reply.[2] The five (5)-month extension request filed on 17 May, 2007, was submitted more than five (5) months after the end of the period for reply to the Office communication mailed on 5 October, 2006, and therefore is unnecessary. The extension of time fee paid on 17 May, 2007, will be credited to counsel's deposit account as authorized.

The application is referred to the Office of Initial Patent Examination for further processing.

Telephone inquiries concerning this matter may be directed to the undersigned at (571)272-3231.

D Wood

Douglas I. Wood
Senior Petitions Attorney
Office of Petitions

[2] See In re Application of S., 8 USPQ2d 1630, 1631 (Comm'r Pats. 1988).

UNITED STATES PATENT AND TRADEMARK OFFICE

Commissioner for Patents
United States Patent and Trademark Office
P.O. Box 1450
Alexandria, VA 22313-1450
www.uspto.gov

JONES DAY
222 EAST 41ST ST
NEW YORK, NY 10017

COPY MAILED

DEC 21 2006

OFFICE OF PETITIONS

In re Application of	:	
Zhou et al.	:	
Application No. 60/842970	:	
Filing or 371(c) Date: 09/06/2006	:	DECISION
Attorney Docket Number:	:	ON PETITION
11806-002-888	:	

This is a decision on the "Petition Under 37 C.F.R. § 1.10(c) to Correct Filing Date to Accord with U.S. Postal Service Deposit Date", filed October 27, 2006, requesting that the above-identified application be accorded a filing date of September 6, 2006, rather than the presently accorded filing date of September 7, 2006. The petition is properly treated under 37 CFR 1.10(d).

Petitioner alleges that the application was deposited in Express Mail service on September 6, 2006. Petitioner has filed the appropriate documentary and corroborating evidence demonstrating that September 6, 2006, was the date the correspondence was deposited Express Mail Post Office to Addressee[1].

In view of the above, the petition is **granted**.

This application file will be forwarded to the Office of Initial Patent Examination for correction of the filing date to December 21, 2005, and for the mailing of a corrected filing receipt.

Telephone inquiries concerning this matter should be directed to the undersigned at (571) 272-3232.

Derek L. Woods
Attorney
Office of Petitions

[1] Petitioner filed a copy of the U.S.P.S. Track & Confirm, however, it shows the date of acceptance as September 7, 2006. Also, the "Date-In" on the Express Mail Label is blank. As such, the petition is not appropriate under 37 CFR 1.10(c). However, the Express Mail Label includes a date- stamp of the U.S.P.S. of September 6, 2006. IAW 37 CFR 1.10(d), the petition is granted.

RECEIVED
CENTRAL FAX CENTER
FEB 2 3 2007

TELEFACSIMILE LETTER FROM
JONES DAY
222 East 41st Street
New York, New York 10017-6702
Telephone Number (212) 326-3939
Fax No.: (212) 755-7306

TO: Commissioner for Patents
P.O. Box 1450
Alexandria, Virginia 22313-1450

FAX NO.: 1 (571) 273-8300 FROM: T. Christopher Tsang

PAGES: 2 (including Cover Sheet) DATE: February 23, 2007

Application of:	Zhou et al.	Confirmation No.:	
Serial No.:	60/842,970	Art Unit:	To be assigned
Filed:	September 6, 2006	Examiner:	To be assigned
For:	Radiopharmaceuticals And Methods Of Use	Attorney Docket No.:	11806-002-888

Message:

CERTIFICATION OF FACSIMILE TRANSMISSION UNDER 37 C.F.R. 1.8(a)

I hereby certify that this paper is being filed with the United States Patent and Trademark Office by facsimile transmission on February 23, 2007 to facsimile telephone number (571) 273-8300.

T. Christopher Tsang 40,258 (Reg. No.)

NYI-3953483v1
302928 - 888001

RECEIVED
CENTRAL FAX CENTER
FEB 2 3 2007

IN THE UNITED STATES PATENT AND TRADEMARK OFFICE

Application of:	Zhou et al.	Confirmation No.:	
Serial No.:	60/842,970	Art Unit:	To be assigned
Filed:	September 6, 2006	Examiner:	To be assigned
For:	Radiopharmaceuticals And Methods Of Use	Attorney Docket No.:	11806-002-888

REQUEST TO CORRECT DECISION ON PETITION

Mr. Derek Woods
Commissioner for Patents
P.O. Box 1450
Alexandria, Virginia 22313-1450

Sir:

Enclosed please find a copy of a Decision On Petition mailed December 21, 2006 for the above-captioned application. Please note the error and the indicated correction highlighted on the copy. Specifically, the fourth paragraph of the Decision should recite "September 6, 2006" rather than "December 21, 2005" as the filing date. As stated in the preceding paragraph of the Decision, Applicants' petition to correct the filing date from September 7, 2006 to September 6, 2006 has been granted. So the correct filing date is September 6, 2006.

Accordingly, Applicants request a corrected Decision on Petition and a corrected Filing Receipt that accurately reflects the filing date of the above-identified patent application. Since this error is on the part of the United States Patent and Trademark Office, it is believed no fee should be charged to the Applicants. However, if any fee is required, please charge the necessary fee to Jones Day Deposit Account No. 50-3013. A duplicate of this document is enclosed for accounting purposes.

Respectfully submitted,

T. Christopher Tsang 40,258 (Reg. No.)

Date: February 23, 2007

JONES DAY
222 East 41st Street
New York, New York 10017
(212) 326-3939

NYI-3953338v1
302928 - 888001

UNITED STATES PATENT AND TRADEMARK OFFICE

Commissioner for Patents
United States Patent and Trademark Office
P.O. Box 1450
Alexandria, VA 22313-1450
www.uspto.gov

JONES DAY
222 EAST 41ST ST
NEW YORK, NY 10017

COPY MAILED
DEC 2 1 2006
OFFICE OF PETITIONS

In re Application of	:	
Zhou et al.	:	
Application No. 60/842970	:	
Filing or 371(c) Date: 09/06/2006	:	DECISION
Attorney Docket Number:	:	ON PETITION
11806-002-888	:	

This is a decision on the "Petition Under 37 C.F.R. § 1.10(c) to Correct Filing Date to Accord with U.S. Postal Service Deposit Date", filed October 27, 2006, requesting that the above-identified application be accorded a filing date of September 6, 2006, rather than the presently accorded filing date of September 7, 2006. The petition is properly treated under 37 CFR 1.10(d).

Petitioner alleges that the application was deposited in Express Mail service on September 6, 2006. Petitioner has filed the appropriate documentary and corroborating evidence demonstrating that September 6, 2006, was the date the correspondence was deposited Express Mail Post Office to Addressee[1].

In view of the above, the petition is **granted**.

This application file will be forwarded to the Office of Initial Patent Examination for correction of the filing date to ~~December 21, 2005~~ September 6, 2006 and for the mailing of a corrected filing receipt.

Telephone inquiries concerning this matter should be directed to the undersigned at (571) 272-3232.

Derek L. Woods
Derek L. Woods
Attorney
Office of Petitions

DEC 2 7 2006
T. Tsang

[1] Petitioner filed a copy of the U.S.P.S. Track & Confirm, however, it shows the date of acceptance as September 7, 2006. Also, the "Date-In" on the Express Mail Label is blank. As such, the petition is not appropriate under 37 CFR 1.10(c). However, the Express Mail Label includes a date- stamp of the U.S.P.S. of September 6, 2006. IAW 37 CFR 1.10(d), the petition is granted.

Commissioner for Patents
United States Patent and Trademark Office
P.O. Box 1450
Alexandria, VA 22313-1450
www.uspto.gov

MARSHALL & MELHORN
FOUR SEAGATE, EIGHT FLOOR
TOLEDO, OH 43604

COPY MAILED

JAN 12 2007

OFFICE OF PETITIONS

In re Application of	:	
Smith et al.	:	
Application No. 60/843,185	:	
Filing or 371(c) Date: 09/08/2006	:	
Attorney Docket Number:	:	DECISION
1-17524	:	ON PETITION

This is a decision on the "Petition", filed October 19, 2006, requesting the above-identified application be accorded a filing date of September 8, 2006.

The petition is granted.

The application was filed on September 9, 2006. On September 25, 2006, the Office of Initial Patent Examination mailed a Notice of Incomplete Provisional Application (hereinafter "Notice"), informing Applicant that the application had NOT been accorded a filing date because the application had been deposited without drawings.

Applicant responds with the instant petition and avers that the application "is that of a method of making a coated article, and coated article formed thereby." Petition at p.2.

Based upon Applicant's assertion, a filing date may be accorded the application papers deposited on September 8, 2006.

In view of the above, the Notice mailed September 25, 2006, was mailed in error and is hereby withdrawn.

Applicant has also filed a preliminary amendment and asserts that amendments are allowed to correct such deficiencies in the application.

37 CFR 1.53(c) provides that "[n]o amendment, other than to make the provisional application comply with the patent statute and all applicable regulations, may be made to the provisional application after the filing date of the provisional application."

Here, the application complies with the patent statute and regulations based upon applicant's assertion that the application is that of a method of making a coated article, and coated article formed thereby. No amendment of the application is necessary.

Accordingly, the amendment has not been entered and is not part of the application disclosure.

This application is being referred to the Office of Initial Patent Examination, Customer Corrections, for further processing, with the filing date of September 8, 2006, using the application papers filed on that date, and an indication that no drawings were present or required on filing.

No petition fee has been charged and none is due.

Telephone inquiries concerning this matter should be directed to the undersigned at (571-272-3232.

Derek L. Woods
Attorney
Office of Petitions

UNITED STATES PATENT AND TRADEMARK OFFICE

COMMISSIONER FOR PATENTS
UNITED STATES PATENT AND TRADEMARK OFFICE
P.O. BOX 1450
ALEXANDRIA, VA 22313-1450
www.uspto.gov

MINTZ, LEVIN, COHN, FERRIS, GLOVSKY
AND POPEO, P.C.
ONE FINANCIAL CENTER
BOSTON, MA 02111

COPY MAILED
DEC 10 2007
OFFICE OF PETITIONS

In re Application of :
Darren R. Link, et al :
Application No. 60/843,327 :
Filed: September 8, 2006 :
Attorney Docket No. 28855-526 PRO :

DECISION GRANTING PETITION

This is a decision on the petition filed August 3, 2007, requesting that the above-identified application be accorded a filing date of September 8, 2006, instead of the presently accorded date of September 11, 2006.

Petitioners request the earlier filing date on the basis that the application was purportedly deposited with the U. S. Postal Service (USPS) as Express Mail on September 8, 2006. In support, petitioners provide a copy of the Express Mail label, No. EV 538965935 US, the same Express Mail receipt number referred to in the transmittal letter found in the file. It is noted that, while the "date in" on the copy of the Express Mail label includes a hand written date of "9-11-06", it also includes a USPS receipt stamp dated September 6, 2006. A copy of the USPS Track/Confirm record for Express Mail Label No. EV 538965935 US was also provided which corroborates acceptance of the "Express Mail" package in question by the USPS Boston MA 02205 on September 8, 2006 at 8:49p.m.

In view of the above, the evidence is convincing that the Express Mail package was entrusted to the USPS on September 8, 2006 and that this application is entitled to a filing date of September 8, 2006.

The petition is **GRANTED**.

The application is being referred to the Office of Patent Application Processing (OPAP) to correct the filing date to **September 8, 2006** and issue a corrected filing receipt.

Telephone inquires related to this decision should be directed to the undersigned at (571) 272-3204. Telephone inquiries related to OPAP processing should be directed to their hotline at (571) 272-4000.

Sherry D. Brinkley
Petitions Examiner
Office of Petitions

UNITED STATES PATENT AND TRADEMARK OFFICE

Commissioner for Patents
United States Patent and Trademark Office
P.O. Box 1450
Alexandria, VA 22313-1450
www.uspto.gov

INTELLECTUAL PROPERTY MANAGEMENT
BOEING MANAGEMENT COMPANY
P.O. BOX 2515
MAIL CODE 110-SD54
SEAL BEACH CA 90740-1515

COPY MAILED

SEP 13 2007

OFFICE OF PETITIONS

In re Application of
William P. Krug et al.
Application No. 60/843,882
Filed: September 11, 2006
Attorney Docket Number: 06-0763

ON PETITION

This is a decision on the petition under 37 CFR 1.137(b). [1], filed June 13, 2007, to revive the above identified application.

The petition is **DISMISSED**.

Any request for reconsideration of this decision must be submitted within TWO (2) MONTHS from the mail date of this decision. Extensions of time under 37 CFR 1.136(a) are permitted. The reconsideration request should include a cover letter entitled "Renewed Petition under 37 CFR 1.137(b)".This is **not** a final agency decision.

This application became abandoned for failure to timely respond to the Notice to File Missing Parts mailed September 25, 2006. Accordingly, a Notice of Abandonment was mailed June 4, 2007.

Pursuant to 37 CFR 1.137(b) however, the instant petition lacks item (1) of the regulation. The Provisional Application Cover Sheet filed with the application was deficient as it

---

[1]Effective December 1, 1997, the provisions of 37 CFR 1.137(b) now provide that where the delay in reply was unintentional, a petition may be filed to revive an abandoned application or a lapsed patent pursuant to 37 CFR 1.137(b)graAtable petition filed under the provisions of 37 CFR 1.137(b)must be accompanied by:

(1) the required reply, unless previously filed. In a nonprovisional application abandoned for failure to prosecute, the required reply may be met by the filing of a continuing application. In an application or patent, abandoned or lapsed for failure to pay the issue fee or any portion thereof, the required reply must be the payment of the issue fee or any outstanding balance thereof.

(2) the petition fee as set forth in 37 CFR 1.17(m);

(3) a statement that the entire delay in filing the required reply from the due date for the reply until the filing of a grantable petition pursuant to 37 CFR 1.137(b) was unintentional. The Commissioner may required additional information where there is a question whether the delay was unintentional; and

(4) any terminal disclaimer (and fee as set forth in 37 CFR 1.20(d)) required pursuant to 37 CFR 1.137(c)).

related to joint inventor Michael Hochberg. Thus, the Notice to File Missing Parts required the filing of a Provisional Application Cover Sheet which could be an Application Data Sheet (ADS). Neither a Provisional Application Cover Sheet nor an ADS has been filed with the instant petition.

In view of the above, the application will remain in an abandoned status until such time as either a Provisional Application Cover Sheet or an ADS with city and state or city and foreign country of the residence of each inventor is provided.

Further correspondence with respect to this matter should be addressed as follows:

By mail: Mail Stop Petition
Commissioner for Patents
P.O. Box 1450
Alexandria, VA 22313-1450

By FAX: (571) 273-8300

Telephone inquiries concerning this matter may be directed to the undersigned Petitions Attorney at (571) 272-3212.

Patricia Faison-Ball

Patricia Faison-Ball
Senior Petitions Attorney
Office of Petitions

UNITED STATES PATENT AND TRADEMARK OFFICE

Commissioner for Patents
United States Patent and Trademark Office
P.O. Box 1450
Alexandria, VA22313-1450
www.uspto.gov

INTELLECTUAL PROPERTY MANAGEMENT
BOEING MANAGEMENT COMPANY
P.O. BOX 2515
MAIL CODE 110-SD54
SEAL BEACH CA 90740-1515

COPY MAILED

NOV 0 5 2007

OFFICE OF PETITIONS

In re Application of :
William P. Krug et al. :
Application No. 60/843,882 :
Filed: September 11, 2006 :
Attorney Docket No. 06-0763 :

ON PETITION

This is a decision on the request for reconsideration filed September 20, 2007, to revive the above identified application under 37 CFR 1.137(b). [1]

The petition is **GRANTED**.

This application became abandoned on November 28, 2006 for failure to file a timely response to the Notice to File Missing Parts "Notice" mailed September 25, 2006, which set a two (2) month shortened statutory period for reply. No extensions of the time for reply under 37 CFR 1.136(a) were obtained. Accordingly, a Notice of Abandonment was mailed June 4, 2007. A petition filed June 13, 2007 was dismissed in a decision mailed September 13, 2007 because it included an incomplete Provisional Application Cover Sheet.

Comes now petitioner with a complete Provisional Application Cover Sheet in response to the Notice to File Missing Parts "Notice" mailed September 25, 2006 and in compliance with the requirements under 37 CFR 1.137(b)

This matter is being forwarded to the Office of Patent Application Processing for further processing.

---

[1] A grantable petition filed under the provisions of 37 CFR 1.137(b) must be accompanied by:

(1) the required reply, unless previously filed. In a nonprovisional application abandoned for failure to prosecute, the required reply may be met by the filing of a continuing application. In a nonprovisional utility or plant application filed on or after June 8, 1995, and abandoned for failure to prosecute, the required reply may also be met by the filing of a request for continued examination in compliance with § 1.114. In an application or patent, abandoned or lapsed for failure to pay the issue fee or any portion thereof, the required reply must be the payment of the issue fee or any outstanding balance thereof.

(2) the petition fee as set forth in 37 CFR 1.17(m);

(3) a statement that the entire delay in filing the required reply from the due date for the reply until the filing of a grantable petition pursuant to 37 CFR 1.137(b) was unintentional. The Commissioner may required additional information where there is a question whether the delay was unintentional; and

(4) any terminal disclaimer (and fee as set forth in 37 CFR 1.20(d)) required pursuant to 37 CFR 1.137(c)).

Telephone inquiries concerning this matter may be directed to the undersigned Petitions Attorney at (571) 272-3212.

Patricia Faison-Ball

Patricia Faison-Ball
Senior Petitions Attorney
Office of Petitions

UNITED STATES PATENT AND TRADEMARK OFFICE

UNITED STATES DEPARTMENT OF COMMERCE
United States Patent and Trademark Office
Address: COMMISSIONER FOR PATENTS
P.O. Box 1450
Alexandria, Virginia 22313-1450
www.uspto.gov

APPL NO.	FILING OR 371 (c) DATE	ART UNIT	FIL FEE REC'D	ATTY.DOCKET NO	DRAWINGS	TOT CLMS	IND CLMS
60/844,039	09/11/2006		100	RICE-055PRV	5		

CONFIRMATION NO. 6407

CORRECTED FILING RECEIPT

OC000000021106183

24353
BOZICEVIC, FIELD & FRANCIS LLP
1900 UNIVERSITY AVENUE
SUITE 200
EAST PALO ALTO, CA 94303

Date Mailed: 11/03/2006

Receipt is acknowledged of this provisional Patent Application. It will not be examined for patentability and will become abandoned not later than twelve months after its filing date. Be sure to provide the U.S. APPLICATION NUMBER, FILING DATE, NAME OF APPLICANT, and TITLE OF INVENTION when inquiring about this application. Fees transmitted by check or draft are subject to collection. Please verify the accuracy of the data presented on this receipt. **If an error is noted on this Filing Receipt, please mail to the Commissioner for Patents P.O. Box 1450 Alexandria Va 22313-1450. Please provide a copy of this Filing Receipt with the changes noted thereon. If you received a "Notice to File Missing Parts" for this application, please submit any corrections to this Filing Receipt with your reply to the Notice. When the USPTO processes the reply to the Notice, the USPTO will generate another Filing Receipt incorporating the requested corrections (if appropriate).**

Applicant(s)

Bernard Malfroy-Camine, Arlington, MA;

Power of Attorney: The patent practitioners associated with Customer Number **24353**.

If Required, Foreign Filing License Granted: 10/04/2006

The country code and number of your priority application, to be used for filing abroad under the Paris Convention, is US60/844,039

Projected Publication Date: None, application is not eligible for pre-grant publication

Non-Publication Request: Not applicable

Early-Publication Request: Not applicable

**** SMALL ENTITY ****

Title

Anti-apoptotic compounds

PROTECTING YOUR INVENTION OUTSIDE THE UNITED STATES

Since the rights granted by a U.S. patent extend only throughout the territory of the United States and have no effect in a foreign country, an inventor who wishes patent protection in another country must apply for a patent in a specific country or in regional patent offices. Applicants may wish to consider the filing of an international application under the Patent Cooperation Treaty (PCT). An international (PCT) application generally has the same effect as a regular national patent application in each PCT-member country. The PCT process **simplifies** the filing of patent applications on the same invention in member countries, but **does not result** in a grant of "an international patent" and does not eliminate the need of applicants to file additional documents and fees in countries where patent protection is desired.

Almost every country has its own patent law, and a person desiring a patent in a particular country must make an application for patent in that country in accordance with its particular laws. Since the laws of many countries differ in various respects from the patent law of the United States, applicants are advised to seek guidance from specific foreign countries to ensure that patent rights are not lost prematurely.

Applicants also are advised that in the case of inventions made in the United States, the Director of the USPTO must issue a license before applicants can apply for a patent in a foreign country. The filing of a U.S. patent application serves as a request for a foreign filing license. The application's filing receipt contains further information and guidance as to the status of applicant's license for foreign filing.

Applicants may wish to consult the USPTO booklet, "General Information Concerning Patents" (specifically, the section entitled "Treaties and Foreign Patents") for more information on timeframes and deadlines for filing foreign patent applications. The guide is available either by contacting the USPTO Contact Center at 800-786-9199, or it can be viewed on the USPTO website at http://www.uspto.gov/web/offices/pac/doc/general/index.html.

For information on preventing theft of your intellectual property (patents, trademarks and copyrights), you may wish to consult the U.S. Government website, http://www.stopfakes.gov. Part of a Department of Commerce initiative, this website includes self-help "toolkits" giving innovators guidance on how to protect intellectual property in specific countries such as China, Korea and Mexico. For questions regarding patent enforcement issues, applicants may call the U.S. Government hotline at 1-866-999-HALT (1-866-999-4158).

LICENSE FOR FOREIGN FILING UNDER
Title 35, United States Code, Section 184
Title 37, Code of Federal Regulations, 5.11 & 5.15

GRANTED

The applicant has been granted a license under 35 U.S.C. 184, if the phrase "IF REQUIRED, FOREIGN FILING LICENSE GRANTED" followed by a date appears on this form. Such licenses are issued in all applications where the conditions for issuance of a license have been met, regardless of whether or not a license may be required as set forth in 37 CFR 5.15. The scope and limitations of this license are set forth in 37 CFR 5.15(a) unless an earlier license has been issued under 37 CFR 5.15(b). The license is subject to revocation upon written notification. The date indicated is the effective date of the license, unless an earlier license of similar scope has been granted under 37 CFR 5.13 or 5.14.

This license is to be retained by the licensee and may be used at any time on or after the effective date thereof unless it is revoked. This license is automatically transferred to any related applications(s) filed under 37 CFR 1.53(d). This license is not retroactive.

The grant of a license does not in any way lessen the responsibility of a licensee for the security of the subject matter as imposed by any Government contract or the provisions of existing laws relating to espionage and the national security or the export of technical data. Licensees should apprise themselves of current regulations especially with respect to certain countries, of other agencies, particularly the Office of Defense Trade Controls, Department of State (with respect to Arms, Munitions and Implements of War (22 CFR 121-128)); the Bureau of Industry and Security, Department of Commerce (15 CFR parts 730-774); the Office of Foreign Assets Control, Department of Treasury (31 CFR Parts 500+) and the Department of Energy.

NOT GRANTED

No license under 35 U.S.C. 184 has been granted at this time, if the phrase "IF REQUIRED, FOREIGN FILING LICENSE GRANTED" DOES NOT appear on this form. Applicant may still petition for a license under 37 CFR 5.12, if a license is desired before the expiration of 6 months from the filing date of the application. If 6 months has lapsed from the filing date of this application and the licensee has not received any indication of a secrecy order under 35 U.S.C. 181, the licensee may foreign file the application pursuant to 37 CFR 5.15(b).

UNITED STATES PATENT AND TRADEMARK OFFICE

Commissioner for Patents
United States Patent and Trademark Office
P.O. Box 1450
Alexandria, VA 22313-1450
www.uspto.gov
DIW May-07

FISH & RICHARDSON, PC
P.O. BOX 1022
MINNEAPOLIS MN 55440-1022

COPY MAILED

MAY 25 2007

OFFICE OF PETITIONS

In re Application of	:	
Bailey et al.	:	
Application No. 60/844,208	:	ON PETITION
Filed: 12 September, 2006	:	
Atty Docket No. 21735-010P01	:	

This is a decision on the "PETITION TO REVIVE APPLICATION UNDER 37 CFR §1.137(b)," filed on 27 February, 2007, which is treated as a petition under 37 CFR 1.182 requesting that the above-identified provisional application, without drawings, be accorded a filing date of 12 September, 2006.

The petition is **GRANTED**.

The application was filed on 12 September, 2006, without drawings. Accordingly, on 29 September, 2006, Initial Patent Examination Division mailed a "Notice of Incomplete Provisional Application" stating that the application had not been accorded a filing date because the application had been deposited without drawings. On 10 October, 2006, a letter was mailed stating that the check for the filing fee had been returned as unpaid. A Notice of Termination of Proceedings Under 37 CFR 1.53(e) was mailed on 4 January, 2007.

On 27 February, 2007, the present petition was filed. Petitioners concede that the application was filed without drawings, but argue that "the subject matter of the application would have been understood to a person having ordinary skill in the art even without those drawings."

MPEP § 601.01(f) states that:

> A nonprovisional application having at least one claim, or a provisional application having at least some disclosure, directed to the subject matter discussed above for which a

> drawing is usually not considered essential for a filing date, describing drawing figure(s) in the specification, but filed without drawings will be treated as an application filed without all of the drawing figures referred to in the specification as discussed in MPEP § 601.01(g), so long as the application contains something that can be construed as a written description and the names of all the inventors.

The arguments in the petition will be construed to mean that petitioner's counsel is asserting that drawings are not necessary for a filing date in this application. Drawings will not be further considered as a part of this case.

In view of the above, the "Notice" mailed 29 September, 2006, was mailed in error and is hereby withdrawn.

The application is accorded a filing date of 12 September, 2006, without drawings as a part of the original disclosure.

No petition fee is due. The application filing fee and surcharge[1] will be charged to counsel's deposit account, as authorized in the petition.

The application is being referred to the Office of Initial Patent Examination for correction of the filing date to 12 September, 2006.

Telephone inquiries specific to this matter should be directed to the undersigned at 571 272-3231.

D Wood

Douglas I. Wood
Senior Petitions Attorney
Office of Petitions

---

[1] As the letter mailed on 10 October, 2006, stated that one check covering the filing fees in multiple applications was returned, and the returned check fee was charged in Application No. 60/844,211, no further returned check fee will be charged.

UNITED STATES PATENT AND TRADEMARK OFFICE

Commissioner for Patents
United States Patent and Trademark Office
P.O. Box 1450
Alexandria, VA 22313-1450
www.uspto.gov
DIW May-07

FISH & RICHARDSON, PC
P.O. BOX 1022
MINNEAPOLIS MN 55440-1022

COPY MAILED

MAY 25 2007

OFFICE OF PETITIONS

In re Application of	:	
Bailey et al.	:	
Application No. 60/844,209	:	ON PETITION
Filed: 12 September, 2006	:	
Atty Docket No. 21735-011P01	:	

This is a decision on the "PETITION TO REVIVE APPLICATION UNDER 37 CFR §1.137(b)," filed on 26 February, 2007, which is treated as a petition under 37 CFR 1.182 requesting that the above-identified provisional application, without drawings, be accorded a filing date of 12 September, 2006.

The petition is **GRANTED**.

The application was filed on 12 September, 2006, without drawings. Accordingly, on 27 September, 2006, Initial Patent Examination Division mailed a "Notice of Incomplete Provisional Application" stating that the application had not been accorded a filing date because the application had been deposited without drawings. On 10 October, 2006, a letter was mailed stating that the check for the filing fee had been returned as unpaid. A Notice of Termination of Proceedings Under 37 CFR 1.53(e) was mailed on 4 January, 2007.

On 26 February, 2007, the present petition was filed. Petitioners concede that the application was filed without drawings, but argue that "the subject matter of the application would have been understood to a person having ordinary skill in the art even without those drawings."

MPEP § 601.01(f) states that:

> A nonprovisional application having at least one claim, or a provisional application having at least some disclosure, directed to the subject matter discussed above for which a

> drawing is usually not considered essential for a filing date, describing drawing figure(s) in the specification, but filed without drawings will be treated as an application filed without all of the drawing figures referred to in the specification as discussed in MPEP § 601.01(g), so long as the application contains something that can be construed as a written description and the names of all the inventors.

The arguments in the petition will be construed to mean that petitioner's counsel is asserting that drawings are not necessary for a filing date in this application. Drawings will not be further considered as a part of this case.

In view of the above, the "Notice" mailed 27 September, 2006, was mailed in error and is hereby withdrawn.

The application is accorded a filing date of 12 September, 2006, without drawings as a part of the original disclosure.

No petition fee is due. The application filing fee and surcharge[1] will be charged to counsel's deposit account, as authorized in the petition.

The application is being referred to the Office of Initial Patent Examination for correction of the filing date to 12 September, 2006.

Telephone inquiries specific to this matter should be directed to the undersigned at 571 272-3231.

D Wood

Douglas I. Wood
Senior Petitions Attorney
Office of Petitions

---

[1] As the letter mailed on 10 October, 2006, stated that one check covering the filing fees in multiple applications was returned, and the returned check fee was charged in Application No. 60/844,211, no further returned check fee will be charged.

UNITED STATES PATENT AND TRADEMARK OFFICE

Commissioner for Patents
United States Patent and Trademark Office
P.O. Box 1450
Alexandria, VA 22313-1450
www.uspto.gov
DIW May-07

FISH & RICHARDSON, PC
P.O. BOX 1022
MINNEAPOLIS MN 55440-1022

COPY MAILED

MAY 17 2007

OFFICE OF PETITIONS

In re Application of	:	
Bailey et al.	:	
Application No. 60/844,211	:	ON PETITION
Filed: 12 September, 2006	:	
Atty Docket No. 21735-012P01	:	

This is a decision on the "PETITION TO REVIVE APPLICATION UNDER 37 CFR §1.137(b)," filed on 28 February, 2007, which is treated as a petition under 37 CFR 1.182 requesting that the above-identified provisional application, without drawings, be accorded a filing date of 12 September, 2006.

The petition is **GRANTED**.

The application was filed on 12 September, 2006, without drawings. Accordingly, on 29 September, 2006, Initial Patent Examination Division mailed a "Notice of Incomplete Provisional Application" stating that the application had not been accorded a filing date because the application had been deposited without drawings. On 10 October, 2006, a letter was mailed stating that the check for the filing fee had been returned as unpaid. A Notice of Termination of Proceedings Under 37 CFR 1.53(e) was mailed on 4 January, 2007.

On 28 February, 2007, the present petition was filed. Petitioners concede that the application was filed without drawings, but argue that "the subject matter of the application would have been understood to a person having ordinary skill in the art even without those drawings."

MPEP § 601.01(f) states that:

> A nonprovisional application having at least one claim, or a provisional application having at least some disclosure, directed to the subject matter discussed above for which a

> drawing is usually not considered essential for a filing date, describing drawing figure(s) in the specification, but filed without drawings will be treated as an application filed without all of the drawing figures referred to in the specification as discussed in MPEP § 601.01(g), so long as the application contains something that can be construed as a written description and the names of all the inventors.

The arguments in the petition will be construed to mean that petitioner's counsel is asserting that drawings are not necessary for a filing date in this application. Drawings will not be further considered as a part of this case.

In view of the above, the "Notice" mailed 29 September, 2006, was mailed in error and is hereby withdrawn.

The application is accorded a filing date of 12 September, 2006, without drawings as a part of the original disclosure.

No petition fee is due. The application filing fee, surcharge, and processing fee will be charged to counsel's deposit account, as authorized in the petition.

The application is being referred to the Office of Initial Patent Examination for correction of the filing date to 12 September, 2006.

Telephone inquiries specific to this matter should be directed to the undersigned at 571 272-3231.

D Wood

Douglas I. Wood
Senior Petitions Attorney
Office of Petitions

UNITED STATES PATENT AND TRADEMARK OFFICE

Commissioner for Patents
United States Patent and Trademark Office
P.O. Box 1450
Alexandria, VA 22313-1450
www.uspto.gov

FISH & RICHARDSON, PC
P.O. BOX 1022
MINNEAPOLIS MN 55440-1022

COPY MAILED

MAY 3 1 2007

OFFICE OF PETITIONS

In re Application of	:	DECISION
Bailey et al.	:	ON PETITION
Application No. 60/844212	:	and
Filing or 371(c) Date: 09/12/2006	:	NOTICE OF
Attorney Docket Number:	:	ABANDONMENT
21735-013P01	:	

This is a decision on the Petition to Revive the Application Under 37 CFR 1.137(b), filed March 1, 2007, requesting the above-identified application be accorded a filing date of September 12, 2006. The petition is properly treated as a petition to accord a filing date under 37 CFR 1.53(e).

The petition is granted.

The application was filed on September 12, 2006. On September 29, 2006, the Office of Initial Patent Examination mailed a Notice of Incomplete Provisional Application (hereinafter "Notice"), informing Applicant that the application had NOT been accorded a filing date because the application had been deposited without drawings.

Applicant responds with the instant petition and avers that "the subject matter of the application would have been ubnderstood by a person having ordinary skill in the art even without those drawings". Petition at p.1.

Based upon Applicant's assertion, a filing date may be accorded the application papers deposited on September 12, 2006.

In view of the above, the Notice mailed September 29, 2006, was mailed in error and is hereby withdrawn.

A review of Office records reveal that the application filing fees have not been paid. Applicant as informed in a Notice mailed October 10, 2006, that the check was returned by the bank as unpaid. The filing fees; surcharge for late filing fee and processing fee for the returned check were due two (2) months from the mailing of the Notice. A copy of the Notice is enclosed.

No response to the Notice has been received. Accordingly, the application is held **ABANDONED**.

No petition fee has been charged and none is due.

This application is being referred to the Office of Initial Patent Examination, Customer Corrections, for further processing, with the filing date of September 9, 2006, using the application papers filed on that date, and an indication that no drawings were present or required on filing.

Telephone inquiries concerning this matter should be directed to the undersigned at (571-272-3232.

Derek L. Woods
Attorney
Office of Petitions

Enclosure: Notice regarding returned check

UNITED STATES PATENT AND TRADEMARK OFFICE

UNITED STATES DEPARTMENT OF COMMERCE
United States Patent and Trademark Office
Address: COMMISSIONER FOR PATENTS
P.O. Box 1450
Alexandria, Virginia 22313-1450
www.uspto.gov

October 10, 2006

V-Tel Communications Corporation
4695 Macarthur Ct. Ste. 1100
Newport Beach, CA 92660

Attn: Kenneth Stephen Bailey

Re: 60/844205, 206, 207, 208, 209, 210, 211, 212, 213, 214 & 60/844215

The purpose of this communication is to inform you that check number 1130, dated September 12, 2006 in the amount of $1100.00 has been returned by the bank as unpaid.

The practice of the Office is to treat such returned checks as though the fee for which they were intended was never received. Therefore, you are required to submit the following fee(s):

X	**$1100.00** filing fees
X	**$25.00** surcharge for a late filing fee(11documents Total $275.00)
X	**$50.00** fee for processing a returned check

A SHORTENED STATUTORY PERIOD FOR RESPONSE TO THE REQUIREMENTS OF THIS NOTICE IS SET TO EXPIRE **TWO MONTHS** FROM THE DATE OF THIS NOTICE.

FAILURE TO RESPOND WITHIN THIS PERIOD WILL RESULT IN ABANDONMENT OF THE APPLICATION.

The filing receipt will not be mailed out until all fees are paid. If the filing receipt has already been mailed out, it is void if all the fees are not paid in a timely manner.

Further correspondence with respect to this matter should include a copy of this notice and be addressed to the following:

Commissioner of Patents and Trademarks
P O Box 1450
Alexandria, VA 22313-1450

Telephone inquiries should be directed to the Office of Initial Patent Examination, Customer Service Center at (571) 272-4000.

Cynthia Streater
Office of Initial Patent Examination

UNITED STATES PATENT AND TRADEMARK OFFICE

Commissioner for Patents
United States Patent and Trademark Office
P.O. Box 1450
Alexandria, VA 22313-1450
www.uspto.gov
DIW May-07

FISH & RICHARDSON, PC
P.O. BOX 1022
MINNEAPOLIS MN 55440-1022

COPY MAILED

MAY 25 2007

OFFICE OF PETITIONS

In re Application of	:	
Bailey et al.	:	
Application No. 60/844,214	:	ON PETITION
Filed: 12 September, 2006	:	
Atty Docket No. 21735-014P01	:	

This is a decision on the "PETITION TO REVIVE APPLICATION UNDER 37 CFR §1.137(b)," filed on 2 March, 2007, which is treated as a petition under 37 CFR 1.182 requesting that the above-identified provisional application, without drawings, be accorded a filing date of 12 September, 2006.

The petition is **GRANTED**.

The application was filed on 12 September, 2006, without drawings. Accordingly, on 27 September, 2006, Initial Patent Examination Division mailed a "Notice of Incomplete Provisional Application" stating that the application had not been accorded a filing date because the application had been deposited without drawings. On 10 October, 2006, a letter was mailed stating that the check for the filing fee had been returned as unpaid. A Notice of Termination of Proceedings Under 37 CFR 1.53(e) was mailed on 4 January, 2007.

On 2 March, 2007, the present petition was filed. Petitioners concede that the application was filed without drawings, but argue that "the subject matter of the application would have been understood to a person having ordinary skill in the art even without those drawings."

MPEP § 601.01(f) states that:

> A nonprovisional application having at least one claim, or a provisional application having at least some disclosure, directed to the subject matter discussed above for which a

> drawing is usually not considered essential for a filing date, describing drawing figure(s) in the specification, but filed without drawings will be treated as an application filed without all of the drawing figures referred to in the specification as discussed in MPEP § 601.01(g), so long as the application contains something that can be construed as a written description and the names of all the inventors.

The arguments in the petition will be construed to mean that petitioner's counsel is asserting that drawings are not necessary for a filing date in this application. Drawings will not be further considered as a part of this case.

In view of the above, the "Notice" mailed 27 September, 2006, was mailed in error and is hereby withdrawn.

The application is accorded a filing date of 12 September, 2006, without drawings as a part of the original disclosure.

No petition fee is due. The application filing fee and surcharge[1] will be charged to counsel's deposit account, as authorized in the petition.

The application is being referred to the Office of Initial Patent Examination for correction of the filing date to 12 September, 2006.

Telephone inquiries specific to this matter should be directed to the undersigned at 571 272-3231.

DWood

Douglas I. Wood
Senior Petitions Attorney
Office of Petitions

---

[1] As the letter mailed on 10 October, 2006, stated that one check covering the filing fees in multiple applications was returned, and the returned check fee was charged in Application No. 60/844,211, no further returned check fee will be charged.

UNITED STATES PATENT AND TRADEMARK OFFICE

Commissioner for Patents
United States Patent and Trademark Office
P.O. Box 1450
Alexandria, VA 22313-1450
www.uspto.gov
DIW May-07

FISH & RICHARDSON, PC
P.O. BOX 1022
MINNEAPOLIS MN 55440-1022

COPY MAILED

MAY 25 2007

OFFICE OF PETITIONS

In re Application of	:	
Bailey et al.	:	
Application No. 60/844,215	:	ON PETITION
Filed: 12 September, 2006	:	
Atty Docket No. 21735-015P01	:	

This is a decision on the "PETITION TO REVIVE APPLICATION UNDER 37 CFR §1.137(b)," filed on 2 March, 2007, which is treated as a petition under 37 CFR 1.182 requesting that the above-identified provisional application, without drawings, be accorded a filing date of 12 September, 2006.

The petition is **GRANTED**.

The application was filed on 12 September, 2006, without drawings. Accordingly, on 29 September, 2006, Initial Patent Examination Division mailed a "Notice of Incomplete Provisional Application" stating that the application had not been accorded a filing date because the application had been deposited without drawings. On 10 October, 2006, a letter was mailed stating that the check for the filing fee had been returned as unpaid. A Notice of Termination of Proceedings Under 37 CFR 1.53(e) was mailed on 4 January, 2007.

On 2 March, 2007, the present petition was filed. Petitioners concede that the application was filed without drawings, but argue that "the subject matter of the application would have been understood to a person having ordinary skill in the art even without those drawings."

MPEP § 601.01(f) states that:

> A nonprovisional application having at least one claim, or a provisional application having at least some disclosure, directed to the subject matter discussed above for which a

> drawing is usually not considered essential for a filing date, describing drawing figure(s) in the specification, but filed without drawings will be treated as an application filed without all of the drawing figures referred to in the specification as discussed in MPEP § 601.01(g), so long as the application contains something that can be construed as a written description and the names of all the inventors.

The arguments in the petition will be construed to mean that petitioner's counsel is asserting that drawings are not necessary for a filing date in this application. Drawings will not be further considered as a part of this case.

In view of the above, the "Notice" mailed 29 September, 2006, was mailed in error and is hereby withdrawn.

The application is accorded a filing date of 12 September, 2006, without drawings as a part of the original disclosure.

No petition fee is due. The application filing fee and surcharge[1] will be charged to counsel's deposit account, as authorized in the petition.

The application is being referred to the Office of Initial Patent Examination for correction of the filing date to 12 September, 2006.

Telephone inquiries specific to this matter should be directed to the undersigned at 571 272-3231.

D Wood

Douglas I. Wood
Senior Petitions Attorney
Office of Petitions

---

[1] As the letter mailed on 10 October, 2006, stated that one check covering the filing fees in multiple applications was returned, and the returned check fee was charged in Application No. 60/844,211, no further returned check fee will be charged.

UNITED STATES PATENT AND TRADEMARK OFFICE

Commissioner for Patents
United States Patent and Trademark Office
P.O. Box 1450
Alexandria, VA 22313-1450
www.uspto.gov

HOLLAND & BONZAGNI, P.C.
171 DWIGHT ROAD, SUITE 302
LONGMEADOW, MA 01106-1700

COPY MAILED

SEP 19 2007

OFFICE OF PETITIONS

In re Application of	:	
Mushtaq Ahmed	:	
Application No. 60/844,549	:	DECISION ON PETITION
Filed: May 3, 2006	:	
Attorney Docket No. 06030P	:	

This is a decision on the petition, filed September 13, 2006, requesting that the above-identified application be accorded a filing date of May 3, 2006. The petition is properly treated as a petition under 37 CFR 1.10(e).

Petitioner states that this application was deposited as Express Mail on May 3, 2006. However, the original application papers were never received in the USPTO and the U.S. Postal Service (USPS) was unable to locate any delivery information for the Express Mail package at issue here. In support of the deposit of the application papers as Express Mail on May 3, 2006, petitioner has submitted the following as evidence: (1) a copy of Express Mail label number EV690854678US showing a "date-in" of May 3, 2006; (2) a copy of the originally deposited transmittal letter for this provisional application showing the number of the Express Mail mailing label thereon; (3) a copy of the USPS Track and Confirm record which shows that the Express Mail package at issue was enroute from the Hartford, CT USPS on May 3, 2006 at 7:21 pm and accepted at the Springfield, MA USPS on May 3, 2006 at 7:58 pm; (4) a copy of an Email from the USPS which states that the delivery information records for Express Mail label No. EV690854678US could not be located; and (5) a statement by Maria E. Vega, Office Manager for Holland & Bonzagni, attesting to the deposit of the provisional application papers on May 3, 2006 and attesting that the application papers submitted are true copies of the correspondence and mailing label that were originally mailed.

The rule at 37 CFR 1.10(e) states:

> Any person mailing correspondence addressed as set out in § 1.1(a) to the Office with sufficient postage utilizing the "Express Mail Post Office to Addressee" service of the USPS but not received by the Office, may petition the Director to consider such correspondence filed in the Office on the USPS deposit date, provided that:
>
> (1) The petition is filed promptly after the person becomes aware that the Office has no evidence of receipt of the correspondence;
>
> (2) The number of the "Express Mail" mailing label was placed on the paper(s) or fee(s) that constitute the correspondence prior to the original mailing by "Express Mail";
>
> (3) The petition includes a copy of the originally deposited paper(s) or fee(s) that constitute the correspondence showing the number of the "Express Mail" mailing label thereon, a copy of any returned postcard receipt, a copy of the "Express Mail" mailing label showing the "date-in," a copy of any other official notation by the USPS relied upon to show the date of deposit, and, if the requested filing date is a date other than the "date-in" on the "Express Mail" mailing label or other official notation entered by the USPS, a showing pursuant to paragraph (d)(3) of this section that the requested filing date was the date the correspondence was deposited in the "Express Mail Post Office to Addressee" service prior to the last scheduled pickup for that day; and
>
> (4) The petition includes a statement which establishes, to the satisfaction of the Director, the original deposit of the correspondence and that the copies of the correspondence, the copy of the "Express Mail" mailing label, the copy of any returned postcard receipt, and any official notation entered by the USPS are true copies of the originally mailed correspondence, original "Express Mail" mailing label, returned postcard receipt, and official notation entered by the USPS.

The petition complies with the above requirements. Therefore, this application is entitled to a filing date of May 3, 2006 and has been so accorded.

The petition under 37 CFR 1.10(e) is **GRANTED**.

This application file is being referred to the Office of Initial Patent Examination (OIPE) for processing of this application with a filing date of May 3, 2006 and for issuance of a corrected filing receipt.

Telephone inquiries relating to this decision should be directed to the undersigned at (571) 272-3218. Telephone inquiries related to OIPE processing should be directed to their hotline at (571) 272-4000.

Frances Hicks
Petitions Examiner
Office of Petitions

UNITED STATES PATENT AND TRADEMARK OFFICE

COMMISSIONER FOR PATENTS
UNITED STATES PATENT AND TRADEMARK OFFICE
P.O. BOX 1450
ALEXANDRIA, VA 22313-1450
www.uspto.gov

COPY MAILED

JAN 04 2008

OFFICE OF PETITIONS

FAEGRE & BENSON, LLP
BOSTON SCIENTIFIC PATENT DOCK
2200 WELLS FARGO CENTER
90 SOUTH SEVENTH STREET
MINNEAPOLIS MN 55402-3901

In re Application of	:	
Greenland, et al.	:	
Application No. 60/844,821	:	DECISION GRANTING
Filed: September 15, 2007	:	PETITION
Attorney Docket No. 32469-334686	:	

This is a decision on the petition filed December 13, 2007, requesting that the above-identified application be accorded a filing date of September 15, 2007, rather than the presently accorded date of September 14, 2007. The petition is properly treated as a petition under 37 CFR 1.10(c).

The petition is **GRANTED**.

Petitioners request the later filing date on the basis that the application was purportedly deposited with Express Mail Service on September 15, 2007 pursuant to 37 CFR 1.10. While the copy of the Express Mail label receipt no. EV800812006US bears a handwritten "date-in" of September 14, 2007, it also includes a USPS receipt date stamp of September 14, 2007. Petitioners allege that the date of mailing shown in the "date-in" is a U. S. Postal Service (USPS) error and the correct date of mailing pursuant to 37 CFR 1.10 is September 15, 2007.

The Office considers the date the paper or fee is shown to have been deposited as "Express Mail" to be the "date-in" on the Express Mail label, MPEP 513. However, in view of the conflicting dates on the label, a search of the USPS' Express Mail Track and Confirm database was made and confirms that the package bearing Express Mail label No. EV800812006US was accepted on September 15, 2007.

No fee is due in connection with this matter. A refund of the $400.00 petition fee submitted herewith will issue in due course.

This application file is being returned to the Office of Initial Patent Examination (OIPE) for **correction of the filing date to September 15, 2007 and issuance of a corrected filing receipt.**

Telephone inquiries relating to this decision should be directed to the undersigned at (571) 272-3205. Telephone inquiries related to OIPE processing should be directed to their hotline at (703) 308-1202.

Alesia M. Brown
Petitions Attorney
Office of Petitions

Brown, Alesia

From: U.S._Postal_Service_ [U.S._Postal_Service@usps.com]
Sent: Saturday, December 29, 2007 5:26 PM
To: Brown, Alesia
Subject: U.S. Postal Service Track & Confirm email Restoration - EV80 0812 006U S

This is a post-only message. Please do not respond.

alesia brown has requested that you receive this restoration information for Track & Confirm as listed below.

Current Track & Confirm e-mail information provided by the U.S. Postal Service.

Label Number: EV80 0812 006U S

Service Type: Express Mail - Post Office to Addressee

Shipment Activity	Location	Date & Time
Delivered	ALEXANDRIA VA 22313	09/18/06 7:29am
Arrival at Pick-Up-Point	ALEXANDRIA VA 22313	09/16/06 8:50am
Arrival at		
Arrival at Unit	DULLES VA 20102	09/16/06 8:27am
Processed	SAINT PAUL MN 55111	09/15/06 7:24pm
Acceptance	MINNEAPOLIS MN 55402	09/15/06 4:34pm

USPS has not verified the validity of any email addresses submitted via its online Track & Confirm tool.

For more information, or if you have additional questions on Track & Confirm services and features, please visit the Frequently Asked Questions (FAQs) section of our Track & Confirm site at http://www.usps.com/shipping/trackandconfirmfaqs.htm

UNITED STATES PATENT AND TRADEMARK OFFICE

COMMISSIONER FOR PATENTS
UNITED STATES PATENT AND TRADEMARK OFFICE
P.O. BOX 1450
ALEXANDRIA, VA 22313-1450
www.uspto.gov

COPY MAILED

FEB 20 2008

OFFICE OF PETITIONS

FAEGRE & BENSON, LLP
BOSTON SCIENTIFIC PATENT DOCK
2200 WELLS FARGO CENTER
90 SOUTH SEVENTH STREET
MINNEAPOLIS MN 55402-3901

In re Application of	:
Greenland, et al.	: CLARIFICATION OF DECISION
Application No. 60/844,821	: GRANTING PETITION
Filed: September 15, 2006	:
Attorney Docket No. 32469-334686	:

This letter clarifies the decision mailed January 4, 2008 in response to the petition filed December 13, 2007, requesting that the above-identified application be accorded a filing date of September 15, 2006, rather than September 14, 2006. The petition was properly treated as a petition under 37 CFR 1.10(c).

The petition was properly granted.

Petitioners requested a later filing date on the basis that the application was purportedly deposited with Express Mail Service on September 15, 2006 pursuant to 37 CFR 1.10. While the copy of the Express Mail label receipt no. EV800812006US bears a handwritten "date-in" of September 14, 2006, it also includes a USPS receipt date stamp of September 15, 2006. Petitioners alleged that the date of mailing shown in the "date-in" is a U. S. Postal Service (USPS) error and the correct date of mailing pursuant to 37 CFR 1.10 is September 15, 2006.

The Office considered the date the paper or fee was shown to have been deposited as "Express Mail" to be the "date-in" on the Express Mail label, MPEP 513. However, in view of the conflicting dates on the label, a search of the USPS' Express Mail Track and Confirm database was made and confirmed that the package bearing Express Mail label No. EV800812006US was accepted on September 15, 2006

The petition fee, which was deemed unnecessary, has been refunded.

This application file is being returned to the Office of Initial Patent Examination (OIPE) for **correction of the filing date to September 15, 2006 and issuance of a corrected filing receipt.**

Telephone inquiries relating to this decision should be directed to the undersigned at (571) 272-3205. Telephone inquiries related to OIPE processing should be directed to their hotline at (703) 308-1202.

Alesia M. Brown
Petitions Attorney
Office of Petitions

UNITED STATES PATENT AND TRADEMARK OFFICE

Commissioner for Patents
United States Patent and Trademark Office
P.O. Box 1450
Alexandria, VA 22313-1450
www.uspto.gov
DIW Sep-07

KATHRYN A. PRESSLEY
401 E. 4TH STREET
KANNAPOLIS NC 28083

COPY MAILED

SEP 18 2007

OFFICE OF PETITIONS

In re Application Number: 60/844983 Filing Date: 09/15/2006 For: 1-99/99-1 SWEET AND BITTER GYNOSTEMMA; SUPEROXIDE DISMUTASE AND GLUTATHIONE, (SOD), (AND/OR) + X, FORMULA/MIXTURE, GROWING, 1-99 / 99-1 (YB-S) + 1-99 / 99-1 (B) AND/OR + 1-99 / 99-1 (O) + SWEETNER	ON PETITION

This is a decision in reference to the letter filed on 21 June, 2007, which is treated as a petition to withdraw the holding of abandonment.

This application became abandoned on 6 December, 2006, for failure to file a timely reply to the Notice to File Missing Parts of Provisional Application mailed on 5 October, 2006, which set a two (2) month shortened period for reply. No extensions of the time for reply in accordance with 37 CFR 1.136(a) were obtained. Notice of Abandonment was mailed on 7 June, 2007.

In the present petition, petitioner requests that the Office withdraw the holding of abandonment due to non-receipt of the Notice mailed on 5 October, 2006.

Petitioner, *pro se*, states that the notice was never received.

A review of the record indicates no irregularity in the mailing of the Notice mailed on 5 October, 2006, and in the absence of any irregularity in the mailing, there is a strong presumption that the Notice was properly mailed to the address of record. This presumption may be overcome by showing that the Notice mailed on 5 October, 2006, was not in fact received. However, petitioner has not met the showing required to establish

nonreceipt of an Office communication. To establish nonreceipt of an Office action, a petitioner must: 1) include a statement that the Office action was not received; 2) attest to the fact that a search of the file jacket and docket records indicates that the Office action was not received; and 3) include a copy of the **docket record** where the nonreceived Office action would have been entered had it been received and docketed.[1] A proper docket report consists of a "docket record **where the nonreceived Office action would have been entered had it been received and docketed.**"[2] "For example, if a three-month period for reply was set in the nonreceived Office action, a copy of the docket record showing **all** replies docketed for a date three months from the mail date of the nonreceived Office action must be submitted…"[3]

However, as petitioner is a *pro se* applicant, the Office understands that petitioner may not keep a formal docket record system for her correspondence. Nevertheless, petitioner must provide some sort of showing explaining the manner in which petitioner receives mail from the USPTO, maintains files for patent matters, and treats mail received for such matter. Specifically, petitioner must explain the system for keeping track of patent matters - where petitioner keeps the correspondence; where she writes down due dates; how she knows replies are due, etc. In essence, petitioner must explain how she reminds herself of response due dates and show that the due date for the Notice mailed on 5 October, 2006, was not entered into that system. The Office would like to see documentary evidence and records as may exist which would substantiate that petitioner exercised due diligence with respect to petitioner's most important business.

In this case, it is noted that petitioner states that she keeps a "hard file" of all outgoing and incoming USPTO correspondence. Petitioner should explain, in detail, in a renewed petition, the system used by petitioner for tracking mail from the USPTO. Petitioner should provide copies of any mail log or docket report, and all information should be provided in affidavits or declarations of facts by persons having first hand knowledge of the facts.

---

[1] M.P.E.P. § 711.03(c); See Notice entitled "Withdrawing the Holding of Abandonment When Office Actions Are Not Received," 1156 O.G. 53 (November 16, 1993).

[2] MPEP 711.03(c)(II) (emphasis added).

[3] Id.

As such the application is properly held abandoned.

The petition is **DISMISSED.**

Any request for reconsideration of this decision must be submitted within **TWO (2) MONTHS** from the mail date of this decision. The reconsideration request should include a cover letter entitled "Renewed Petition under 37 CFR 1.181." Extensions of time are permitted under 37 CFR 1.136(a). In the alternative, petitioner may wish to file a petition under 37 CFR 1.137(b) to revive an unintentionally abandoned application.

A courtesy copy of the Notice mailed on 5 October, 2006, has been included for petitioner's use in preparing a reply, should petitioner wish to file a petition to revive the application.

Further correspondence with respect to this matter should be addressed as follows:

By mail: Mail Stop Petition
Commissioner for Patents
P.O. Box 1450
Alexandria, VA 22313-1450

By FAX: (571) 273-8300
Attn: Office of Petitions

By hand: Customer Service Window
Mail Stop Petition
Randolph Building
401 Dulany Street
Alexandria, VA 22314

Telephone inquiries related to this decision should be directed to the undersigned at 571-272-3231.

DWood

Douglas I. Wood
Senior Petitions Attorney
Office of Petitions

Cf: Notice mailed on 5 October, 2006

UNITED STATES PATENT AND TRADEMARK OFFICE

UNITED STATES DEPARTMENT OF COMMERCE
United States Patent and Trademark Office
Address: COMMISSIONER FOR PATENTS
P.O. Box 1450
Alexandria, Virginia 22313-1450
www.uspto.gov

APPLICATION NUMBER	FILING OR 371 (c) DATE	FIRST NAMED APPLICANT	ATTORNEY DOCKET NUMBER
60/844,983	09/15/2006		

CONFIRMATION NO. 2216

FORMALITIES LETTER

Kathryn A. Pressley
401 E. 4th Street
Kannapolis, NC 28083

Date Mailed: 10/05/2006

NOTICE TO FILE MISSING PARTS OF PROVISIONAL APPLICATION

FILED UNDER 37 CFR 1.53(c)

Filing Date Granted

An application number and filing date have been accorded to this provisional application. The items indicated below, however, are missing. Applicant is given **TWO MONTHS** from the date of this Notice within which to file all required items and pay any fees required below to avoid abandonment. Extensions of time may be obtained by filing a petition accompanied by the extension fee under the provisions of 37 CFR 1.136(a).

- The provisional application cover sheet under 37 CFR 1.51(c)(1), which may be an application data sheet (37 CFR 1.76), is required identifying:
  - the name(s) of the inventor(s).
  - either city and state or city and foreign country of the residence of each inventor.

The applicant needs to satisfy supplemental fees problems indicated below.

The required item(s) identified below must be timely submitted to avoid abandonment:

- To avoid abandonment, a surcharge (for late submission of filing fee or cover sheet) as set forth in 37 CFR 1.16(g) of $25 for a small entity in compliance with 37 CFR 1.27, must be submitted with the missing items identified in this letter.

SUMMARY OF FEES DUE:

Total additional fee(s) required for this application is **$25** for a small entity

- **$25** Surcharge.

Replies should be mailed to: Mail Stop Missing Parts
Commissioner for Patents
P.O. Box 1450
Alexandria VA 22313-1450

A copy of this notice MUST be returned with the reply.

Unk

Office of Initial Patent Examination (571) 272-4000, or 1-800-PTO-9199, or 1-800-972-6382

PART 3 - OFFICE COPY

UNITED STATES PATENT AND TRADEMARK OFFICE

Commissioner for Patents
United States Patent and Trademark Office
P.O. Box 1450
Alexandria, VA 22313-1450
www.uspto.gov

COPY MAILED

JAN 05 2007

OFFICE OF PETITIONS

CIMA
LERNER, DAVID ET AL
600 SOUTH AVENUE WEST
WESTFIELD NJ 07090

In re Application of	:	
Habib et al.	:	DECISION GRANTING
Application No. 60/845,151	:	PETITION
Deposited: September 15, 2006	:	
Attorney Docket No. CIMA 3.8-078	:	

This is a decision on the petition filed October 23, 2006, requesting that the above-identified provisional application be accorded a filing date of September 15, 2006.

The application was deposited on September 15, 2006. However, on September 28, 2006, the Office of Initial Patent Examination (OIPE) mailed a "Notice of Incomplete Provisional Application" advising applicant that the application papers had not been accorded a filing date because the application was deposited without drawings.

In response, on October 23, 2006, the present petition was filed. Petitioner states that drawings are not necessary for an understanding of the claimed subject matter and, therefore, the application should be accorded the September 15, 2006 filing date without any drawings.

As stated in MPEP 601.01(f), it is the practice of the PTO to treat a provisional application that contains at least some disclosure of a process or method as an application for which a drawing is <u>not</u> necessary for an understanding of the invention under 35 USC 113 (first sentence). The same practice has been followed in composition applications. The above application contains at least one composition claim.

Since the petition contains a statement that drawings are not necessary for an understanding of the invention and the petition is signed by a registered practitioner, on petition, the application will be accorded the requested filing date without any drawings.

The petition is granted. No petition fee is due.

The application will be processed with only the papers present on filing and is hereby accorded a filing date of **September 15, 2006**, without drawings as part of the original disclosure

Telephone inquiries related to this decision may be directed to the undersigned at (571) 272-3215.

Charlema R. Grant
Petition Attorney
Office of Petitions

UNITED STATES PATENT AND TRADEMARK OFFICE

Commissioner for Patents
United States Patent and Trademark Office
P.O. Box 1450
Alexandria, VA 22313-1450
www.uspto.gov

COPY MAILED

SEP 28 2007

OFFICE OF PETITIONS

GREGORY RICHARDSON
SUITE 210
3890 11TH ST
RIVERSIDE CA 92501

In re Application of Rocky Wright Application No. 60/845,229 Filed: September 18, 2006 Confirmation No. 3316	: : : : :	DECISION ON PETITION

This is in response to the petition to withdraw the holding of abandonment under 37 CFR 1.181, filed August 4, 2007.

The petition under 37 CFR 1.181 is **DISMISSED**.

Any request for reconsideration of this decision must be submitted within **TWO (2) MONTHS** from the mail date of this decision. The reconsideration request should include a cover letter entitled "Renewed Petition under 37 CFR 1.181". Extensions of time under 37 CFR 1.136(a) are permitted.

The above-identified application became abandoned for failure to timely file a reply to the Notice to File Missing Parts mailed September 28, 2006. This Notice set an extendable period for reply of two (2) months for applicant to submit the missing $35 balance for the statutory basic filing fee, plus a $25 surcharge for its late filing. No fee having been received, the application became abandoned on November 29, 2006. The Office mailed a Notice of Abandonment on June 4, 2007.

Petitioner states that he timely filed an oath or declaration and a substitute specification, via a Certificate of Mailing, on September 15, 2006. It appears that petitioner has confused the instant application with that of application no. 11/426,920.

Further correspondence with respect to this matter should be addressed as follows:

By mail: Mail Stop Petitions
Commissioner for Patents
P.O. Box 1450
Alexandria VA 22313-1450

By FAX: (571)273-8300
Attn: Office of Petitions

Telephone inquiries related to this decision should be directed to the undersigned at 571-272-3207.

Cliff Congo
Petitions Attorney
Office of Petitions

UNITED STATES PATENT AND TRADEMARK OFFICE

Commissioner for Patents
United States Patent and Trademark Office
P.O. Box 1450
Alexandria, VA 22313-1450
www.uspto.gov

QUALCOMM INCORPORATED
5775 MOREHOUSE DR.
SAN DIEGO, CA 92121

COPY MAILED
MAY 09 2008

In re Application of	:	
Malladi et al.	:	
Application No. 60/845,268	:	DECISION ON PETITION
Filed: September 14, 2006	:	
Attorney Docket No. 061890P1	:	

This is a decision on the petition under the unintentional provisions of 37 CFR 1.137(b), filed February 20, 2008, to revive the above-identified application.

The petition is **DISMISSED**.

The rules and statutory provisions governing the operations of the U.S. Patent and Trademark Office require payment of a fee on filing each petition to revive an abandoned application for patent based on unintentional delay or to accept an unintentionally delayed payment of a fee for issuing a patent. In this instance, the fee required by law is $1,540. If applicant can qualify as a "small entity" and does so prior to or together with the payment of the fee, the fee will be one-half of the amount indicated. See 37 CFR 1.27.

The petition in the above-identified application was not accompanied by payment of the required fee. No consideration on the merits can be given to the petition until the required fee is received. The authorization to charge fees to the Deposit Account Number 17-0026, as given on page 1 of the above-identified petition, is limited to filing fees only.

Further correspondence with respect to this matter should be addressed as follows:

By mail: Mail Stop PETITIONS
Commissioner for Patents
Post Office Box 1450
Alexandria, VA 22313-1450

By hand: Customer Service Window
Mail Stop Petitions
Randolph Building
401 Dulany Street
Alexandria, VA 22314

By fax: (571) 273-8300
ATTN: Office of Petitions

Any questions concerning this matter may be directed to Ramesh Krishnamurthy at (571) 272-4914.

David Bucci
Petitions Examiner
Office of Petitions

UNITED STATES PATENT AND TRADEMARK OFFICE

Commissioner for Patents
United States Patent and Trademark Office
P.O. Box 1450
Alexandria, VA 22313-1450
www.uspto.gov

QUALCOMM INCORPORATED
ATTN: PATENT DEPARTMENT
5775 MOREHOUSE DR.
SAN DIEGO, CA 92121

MAILED

AUG 13 2009

OFFICE OF PETITIONS

In re Application of	:	
Durga Prasad MALLADI et al.	:	
Application No. 60/845,268	:	DECISION ON PETITION
Filed: September 14. 2006	:	
Attorney Docket No. 061890P1	:	

This is a decision on the renewed petition under the unintentional provisions of 37 CFR 1.137(b), filed June 9, 2009, to revive the above-identified application.

The petition is **GRANTED**.

The application became abandoned for failure to reply in a timely manner to the Notice to File Missing Parts of Provisional Application (Notice), mailed October 2, 2006. The Notice set a period for reply of two (2) months from the mail date of the Notice. No extensions of time under the provisions of 37 CFR 1.136(a) were obtained. Accordingly, the application became abandoned on December 3, 2006.

The petition satisfies the requirements of 37 CFR 1.137(b) in that petitioner has supplied (1) the Provisional Application Cover Sheet that identifies either city and state or city and foreign country of the residence of each inventor and the name(s) of the inventor(s) and the $ 50 surcharge identified in the Notice (2) the petition fee of $1620, and (3) a proper statement of unintentional delay. Accordingly, the reply to the Notice is accepted as having been unintentionally delayed.

The surcharge of $50 identified in the Notice has been charged to Deposit Account 17 – 0026, as authorized.

Telephone inquiries concerning this decision should be directed to the undersigned at (571) 272 - 4914.

The application is being forwarded to Office of Patent Application Processing for further processing in accordance with this decision.

Ramesh Krishnamurthy
Petitions Examiner
Office of Petitions

UNITED STATES PATENT AND TRADEMARK OFFICE

Commissioner for Patents
United States Patent and Trademark Office
P.O. Box 1450
Alexandria, VA 22313-1450
www.uspto.gov

JJGJR.: 12-07

Paper No: __

LUMEN INTELLECTUAL
PROPERTY SERVICES, INC.
2345 YALE STREET
SECOND FLOOR
PALO ALTO CA 94306

COPY MAILED

DEC 28 2007

OFFICE OF PETITIONS

In re Application of
Joe, et al. :
Application No. 60/846,247 : DECISION ON PETITION
Filed: 20 September, 2006 :
Attorney Docket No. S06-154/PROV :

This is a decision on the petition filed on 2 November, 2006, and considered under 37 C.F.R. §1.53.

The Office regrets the delay in addressing the matter—the petition was presented to the attorneys in the Office of Petitions only at this writing.

For the reasons set forth below, the petition under 37 C.F.R. §1.53 is **DISMISSED**.

BACKGROUND

The instant application was deposited on 20 September, 2006

On 10 October, 2006, the Office of Initial Patent Examination (OIPE) mailed a Notice of Omitted Items—to wit: "Fig. 5, as described in the specification"—thus, the application had been accorded a filing date without that figure.

OIPE indicated that Petitioner might:

- contend via petition that Fig. 5, as described in the specification had been submitted on deposit and so evidence that condition with the proper supporting documentation (i.e., a date stamped receipt card (see: MPEP §503)) along with a copy of the specification; or

- accept the application as filed.

OIPE set a two- (2-) month period for reply.

Petitioner has, in fact, selected for neither of those options.

On 2 November, 2006, Petitioner instead submitted the instant petition, including therewith, *inter alia*, what is averred to be a true copy of Fig. 5, along with copies of drawings identified as Figs. 1a, 1b, 2a, 2b, 3 and 4, as described in the specification, however, Petitioner contemporaneously averred that substance of the figures were present, but improvidently mislabeled, and, thus, Petitioner explained the included drawings "properly" labeled.

Petitioner encounters two equally fatal problems with the instant petition:

- clearly Petitioner admits that there was, in fact, no Fig. 5 included by Petitioner with/in this application on deposit on 20 September, 2006, and thus any attempt to add a Fig. 5 to the application would be improper unless Petitioner to accepted a new filing date with the submission, which not only is not the relief which Petitioner has sought herein, but would not be proper in any case; because

- the addition of new matter and acceptance of a later filing date, or (what is really Petitioner's intent herein) to attempt to submit all relabeled drawings (Figs. 1a, 1b, 2a, 2b, 3, 4 and 5) is, by definition, in either case an attempt to amend a provisional application, however, Petitioner makes that attempt in the face of the explicit bar thereto (see: 37 C.F.R. §1.53(c) and MPEP §506.).

ANALYSIS

A search of the official file reveals that:

- on 20 September, 2006, Petitioner deposited the instant application;

- the Office record reflects that Fig.5, as described in the specification was missing upon deposit;

- there is no the date-stamped receipt card submitted by Petitioner, and, in fact, Petitioner admits that no Fig. 5 was submitted; rather, he explains, the figure that was intended to be Fig.53 was mislabeled—as were one or more other drawings.

And the resolution that Petitioner seeks is, in essence, to substitute for the mislabeled the correctly labeled "Fig. 5"—as well as other figures.

The process that Petitioner seeks is termed "amendment," and that process is not permitted in the realm of a provisional application.

Petitioner may, if he wishes, file a new provisional application.

Accordingly, the instant petition must be dismissed.

The Notice mailed on 10 October, 2006, was properly sent and will not be disturbed.

CONCLUSION

The petition is **dismissed**; the petition fee will not be refunded because there is no indication as of this writing of error on the part of the Office.

While telephone inquiries regarding this decision may be directed to the undersigned at (571) 272-3214, it is noted that all practice before the Office is in writing (see: 37 C.F.R. §1.2[1]) and the proper authority for action on any matter in this regard are the statutes (35 U.S.C.), regulations (37 C.F.R.) and the commentary on policy (MPEP). Therefore, no telephone discussion may be controlling or considered authority for Petitioner's/Caller's action(s).

John J. Gillon, Jr.
Senior Attorney
Office of Petitions

---

[1] The regulations at 37 C.F.R. §1.2 provide:

§1.2 Business to be transacted in writing.

All business with the Patent and Trademark Office should be transacted in writing. The personal attendance of applicants or their attorneys or agents at the Patent and Trademark Office is unnecessary. The action of the Patent and Trademark Office will be based exclusively on the written record in the Office. No attention will be paid to any alleged oral promise, stipulation, or understanding in relation to which there is disagreement or doubt.

UNITED STATES PATENT AND TRADEMARK OFFICE

COMMISSIONER FOR PATENTS
UNITED STATES PATENT AND TRADEMARK OFFICE
P.O. BOX 1450
ALEXANDRIA, VA 22313-1450
WWW.USPTO.GOV

Paper No. None

Steven S. Payne
Suite 1005
1101 17th Street NW
Washington DC 20036

COPY MAILED

MAR 12 2007

OFFICE OF PETITIONS

In re Application of	:	
Per-Arne Wiberg	:	
Application No. 60/846,270	:	DECISION ON PETITION
Filed: September 21, 2006	:	
Attorney Docket No. 150-372	:	
Title: DEVICE FOR WIRELESS	:	
OPERATION AND A METHOD FOR	:	
OPERATING THE DEVICE	:	

This is a decision on the petition filed on November 30, 2006, which is properly treated as a petition to withdraw the Notice of Omitted Items in a Provisional Application mailed on October 10, 2006.

The petition pursuant to 37 C.F.R. §1.182 is **DISMISSED**.

The application was filed on September 21, 2006. On October 10, 2006, The Office of Initial Patent Examination Division (OIPE) mailed a "Notice of Omitted Item(s) in a Provisional Application" (notice), stating that the application had been accorded a filing date, and that Figure 12, as described in the specification, appeared to have been omitted.

In response, the present petition was field on November 30, 2006. Petitioner explains that Figure 12 was not missing on November 30, 2006. Instead, Petitioner states that the drawings were mislabeled. The fourth sheet of drawings contains two figures, which appear to be collectively labeled "Fig. 9," and the next sheet of drawings contains Figures 10 and 11. Petitioner has asserted that the fourth sheet of drawings actually contains

Figures 9 and 10, and that the figures which appear on the fifth sheet of drawings should have been labeled Figures 11 and 12.

Petitioner has supplied with this petition a copy of seven sheets of drawings that are correctly labeled, containing Figures 1-15, including Figure 12.

It is obvious from the petition that Figure 12 was not actually missing on September 21, 2006. Rather, the drawing was simply mislabeled as a result of the applicant's filing error. However, the notice mailed on October 10, 2006 was correct in stating that Figure 12 appeared to have been omitted. Therefore, the notice was properly mailed and will not be withdrawn.

As the present petition was not necessitated by any error on the part of the Office, the $400 petition fee will not be refunded.

The application will be processed using the application papers filed on September 21, 2006. The copies of the drawing sheets supplied with the present petition on November 30, 2006 will not be entered, and will not be used for processing, but will be retained in the application file (provisional applications cannot be amended[1]).

The Application is being returned to the Office of Initial Patent Examination for further processing with a filing date of September 21, 2006, using only the application papers filed on that date.

Telephone inquiries regarding *this decision* should be directed to the undersigned at (571) 272-3225. All other inquiries concerning examination procedures should be directed to the Technology Center.

Paul Shanoski

Paul Shanoski
Senior Attorney
Office of Petitions
United States Patent and Trademark Office

1 See 37 C.F.R. §1.53(c). See also MPEP 601.01(b).

UNITED STATES PATENT AND TRADEMARK OFFICE

Commissioner for Patents
United States Patent and Trademark Office
P.O. Box 1450
Alexandria, VA 22313-1450
www.uspto.gov

FITCH EVEN TABIN AND FLANNERY
120 SOUTH LA SALLE STREET
SUITE 1600
CHICAGO IL 60603-3406

COPY MAILED

JUN 19 2007

OFFICE OF PETITIONS

NOTICE

In re Application of :
DeLap, et al. :
Application No. 60/846,780 :
Filed: September 22, 2006 :
Attorney Docket No. 86247/7240 :

This is a notice regarding your request for acceptance of a fee deficiency submission under 37 CFR 1.28(c), filed October 10, 2006.

On September 1, 1998, the Court of Appeals for the Federal Circuit held that 37 CFR 1.28(c) is the sole provision governing the time for correction of the erroneous payment of the issue fee as a small entity. **See DH Technology v. Synergystex International, Inc. 154 F.3d 1333, 47 USPQ2d 1865 (Fed. Cir. Sept. 1, 1998).**

The Office no longer investigates or rejects original or reissue applications under 37 CFR 1.56. **1098 Off. Gaz. Pat. Office 502 (January 3, 1989)**. Therefore, nothing in this Notice is intended to imply that an investigation was done.

Your fee deficiency submission under 37 CFR 1.28 is hereby **ACCEPTED**.

This application is no longer entitled to small entity status. Accordingly, all future fees paid in this application must be paid at the large entity rate.

Inquiries related to this communication should be directed to the undersigned at (571) 272-3230.

Shirene Willis Brantley

Shirene Willis Brantley
Senior Petitions Attorney
Office of Petitions

UNITED STATES PATENT AND TRADEMARK OFFICE

Commissioner for Patents
United States Patent and Trademark Office
P.O. Box 1450
Alexandria, VA 22313-1450
www.uspto.gov

FITCH EVEN TABIN AND FLANNERY
120 SOUTH LA SALLE STREET
SUITE 1600
CHICAGO IL 60603-3406

COPY MAILED

JUN 19 2007

OFFICE OF PETITIONS

In re Application of :
Eisberg, et al. :
Application No. 60/846,781 :
Filed: September 22, 2006 :
Attorney Docket No. 86246/7240 :

NOTICE

This is a notice regarding your request for acceptance of a fee deficiency submission under 37 CFR 1.28(c), filed October 10, 2006.

On September 1, 1998, the Court of Appeals for the Federal Circuit held that 37 CFR 1.28(c) is the sole provision governing the time for correction of the erroneous payment of the issue fee as a small entity. **See DH Technology v. Synergystex International, Inc. 154 F.3d 1333, 47 USPQ2d 1865 (Fed. Cir. Sept. 1, 1998).**

The Office no longer investigates or rejects original or reissue applications under 37 CFR 1.56. **1098 Off. Gaz. Pat. Office 502 (January 3, 1989)**. Therefore, nothing in this Notice is intended to imply that an investigation was done.

Your fee deficiency submission under 37 CFR 1.28 is hereby **ACCEPTED**.

This application is no longer entitled to small entity status. Accordingly, all future fees paid in this application must be paid at the large entity rate.

Inquiries related to this communication should be directed to the undersigned at (571) 272-3230.

Shirene Willis Brantley
Senior Petitions Attorney
Office of Petitions

UNITED STATES PATENT AND TRADEMARK OFFICE

COMMISSIONER FOR PATENTS
UNITED STATES PATENT AND TRADEMARK OFFICE
P.O. BOX 1450
ALEXANDRIA, VA 22313-1450
www.uspto.gov

JAKE MASLOW, DIRECTOR
CUNY, TECHNOLOGY COMMERCIALIZATION OFFICE
ROOM 628
535 EAST 80TH STREET
NEW YORK, NY 10021

COPY MAILED

JAN 16 2008

OFFICE OF PETITIONS

In re Application of :
Erlan H. Feria :
Application No. 60/847,125 : ON PETITION
Filed: September 25, 2006 :
Attorney Docket No.: 06A0237 :

This is a decision on the petition under 37 CFR 1.137(b), filed July 27, 2007, to revive the above-identified provisional application.

There is no indication that the person signing the instant petition was ever given a power of attorney or authorization of agent to prosecute the above-identified application. However, in accordance with 37 CFR 1.34(a), the signature of Flynn Barrison appearing on the petition shall constitute a representation to the United States Patent and Trademark Office that he is authorized to represent the particular party on whose behalf he acts. Under the circumstances of this case, a courtesy copy of this decision is being mailed to petitioner.

The petition is **GRANTED**.

The application became abandoned for a failure to timely file the basic filing fee and surcharge required in a Notice to File Missing Parts of Provisional Application mailed October 16, 2006. A Notice of Abandonment was mailed on June 27, 2007. In response, on July 27, 2007, the present petition was filed. It is noted that the petition suggests an amendment is enclosed; however, no amendment is found.

The petition satisfies the requirements of 37 CFR 1.137(b) in that petitioner has supplied (1) the reply in the form of the filing fee of $100 and the $25 surcharge; (2) the petition fee of $750; and (3) an adequate statement of unintentional delay.

Subject to the provisions of 35 U.S.C. § 119(e)(3) and § 1.7(b), a provisional application will not be regarded as pending after twelve months from its filing date under any circumstances.

Telephone inquiries concerning this decision should be directed to the undersigned at (571) 272-3204.

Sherry D. Brinkley
Petitions Examiner
Office of Petitions

cc: DARBY & DARBY P.C.
P.O. BOX 770
CHURCH STREET STATION
NEW YORK, NY 10008-0770

UNITED STATES PATENT AND TRADEMARK OFFICE

COMMISSIONER FOR PATENTS
UNITED STATES PATENT AND TRADEMARK OFFICE
P.O. BOX 1450
ALEXANDRIA, VA 22313-1450
www.uspto.gov

JAKE MASLOW, DIRECTOR
CUNY, TECHNOLOGY COMMERCIALIZATION OFFICE
ROOM 628
535 EAST 80TH STREET
NEW YORK, NY 10021

COPY MAILED

JAN 16 2008

OFFICE OF PETITIONS

In re Application of :
Erlan H. Feria :
Application No. 60/847,126 : ON PETITION
Filed: September 25, 2006 :
Attorney Docket No.: 06A0238 :

This is a decision on the petition under 37 CFR 1.137(b), filed July 27, 2007, to revive the above-identified provisional application.

There is no indication that the person signing the instant petition was ever given a power of attorney or authorization of agent to prosecute the above-identified application. However, in accordance with 37 CFR 1.34(a), the signature of Flynn Barrison appearing on the petition shall constitute a representation to the United States Patent and Trademark Office that he is authorized to represent the particular party on whose behalf he acts. Under the circumstances of this case, a courtesy copy of this decision is being mailed to petitioner.

The petition is **GRANTED**.

The application became abandoned for a failure to timely file the basic filing fee and surcharge required in a Notice to File Missing Parts of Provisional Application mailed October 18, 2006. A Notice of Abandonment was mailed on June 27, 2007. In response, on July 27, 2007, the present petition was filed. It is noted that the petition suggests an amendment is enclosed; however, no amendment is found.

The petition satisfies the requirements of 37 CFR 1.137(b) in that petitioner has supplied (1) the reply in the form of the filing fee of $100 and the $25 surcharge; (2) the petition fee of $750; and (3) an adequate statement of unintentional delay.

Subject to the provisions of 35 U.S.C. § 119(e)(3) and § 1.7(b), a provisional application will not be regarded as pending after twelve months from its filing date under any circumstances.

Telephone inquiries concerning this decision should be directed to the undersigned at (571) 272-3204.

Sherry D. Brinkley
Petitions Examiner
Office of Petitions

cc: DARBY & DARBY P.C.
P.O. BOX 770
CHURCH STREET STATION
NEW YORK, NY 10008-0770

UNITED STATES PATENT AND TRADEMARK OFFICE

Commissioner for Patents
United States Patent and Trademark Office
P.O. Box 1450
Alexandria, VA 22313-1450
www.uspto.gov

ARENT FOX LLP
1050 CONNECTICUT AVENUE, N.W.
SUITE 400
WASHINGTON DC 20036

COPY MAILED

DEC 0 6 2007

OFFICE OF PETITIONS

In re Application of	:	
Lee et al.	:	
Application No. 60/847,936	:	ON PETITION
Filed: September 29, 2006	:	
Attorney Docket No. 027212-00003	:	

This is a decision on the petition under 37 C.F.R. § 1.182, filed October 30, 2007, to change the name of an inventor.

The petition is **GRANTED.**

The name will be changed from Yaun-Ping Liu to Yuan-Ping Liau.

Telephone inquiries regarding this decision should be directed to the undersigned at (571) 272-3206.

Liana Walsh
Petitions Examiner
Office of Petitions

Enclosure: Corrected Filing Receipt

UNITED STATES PATENT AND TRADEMARK OFFICE

UNITED STATES DEPARTMENT OF COMMERCE
United States Patent and Trademark Office
Address: COMMISSIONER FOR PATENTS
P.O. Box 1450
Alexandria, Virginia 22313-1450
www.uspto.gov

APPLICATION NUMBER	FILING or 371(c) DATE	GRP ART UNIT	FIL FEE REC'D	ATTY.DOCKET.NO	TOT CLAIMS	IND CLAIMS
60/847,936	09/29/2006		100	027212-00003		

CONFIRMATION NO. 7656

CORRECTED FILING RECEIPT

4372
ARENT FOX LLP
1050 CONNECTICUT AVENUE, N.W.
SUITE 400
WASHINGTON, DC 20036

OC000000027056410

Date Mailed: 12/04/2007

Receipt is acknowledged of this provisional patent application. It will not be examined for patentability and will become abandoned not later than twelve months after its filing date. Any correspondence concerning the application must include the following identification information: the U.S. APPLICATION NUMBER, FILING DATE, NAME OF APPLICANT, and TITLE OF INVENTION. Fees transmitted by check or draft are subject to collection. Please verify the accuracy of the data presented on this receipt. **If an error is noted on this Filing Receipt, please write to the Office of Initial Patent Examination's Filing Receipt Corrections. Please provide a copy of this Filing Receipt with the changes noted thereon. If you received a "Notice to File Missing Parts" for this application, please submit any corrections to this Filing Receipt with your reply to the Notice. When the USPTO processes the reply to the Notice, the USPTO will generate another Filing Receipt incorporating the requested corrections**

Applicant(s)

Chih-kung Lee, Taipei City, TAIWAN;
Wen-Jong Wu, Chun-Ho City, TAIWAN;
Chuin-Shan Chen, Taipei, TAIWAN;
Jay Shieh, Taipei, TAIWAN;
Wen-Hsin Hsiao, Taoyuan County, TAIWAN;
Chih-Chiang Cheng, Taipei, TAIWAN;
Nien-Ti Tsou, Taipei City, TAIWAN;
Yao-Tien Huang, Taipei City, TAIWAN;
Yuan-Ping Liu, Keelung City, TAIWAN;
Yu-Yuan Chen, Keelung City, TAIWAN;
Yen-Chieh Wang, Jhonghe City, TAIWAN;

Power of Attorney:
Rhonda Barton--47271

If Required, Foreign Filing License Granted: 10/12/2006

The country code and number of your priority application, to be used for filing abroad under the Paris Convention, is **US 60/847,936**

Projected Publication Date: None, application is not eligible for pre-grant publication

Non-Publication Request: No

Early Publication Request: No
**** SMALL ENTITY ****

Title

Ultrasound transducer apparatus

PROTECTING YOUR INVENTION OUTSIDE THE UNITED STATES

Since the rights granted by a U.S. patent extend only throughout the territory of the United States and have no effect in a foreign country, an inventor who wishes patent protection in another country must apply for a patent in a specific country or in regional patent offices. Applicants may wish to consider the filing of an international application under the Patent Cooperation Treaty (PCT). An international (PCT) application generally has the same effect as a regular national patent application in each PCT-member country. The PCT process **simplifies** the filing of patent applications on the same invention in member countries, but **does not result** in a grant of "an international patent" and does not eliminate the need of applicants to file additional documents and fees in countries where patent protection is desired.

Almost every country has its own patent law, and a person desiring a patent in a particular country must make an application for patent in that country in accordance with its particular laws. Since the laws of many countries differ in various respects from the patent law of the United States, applicants are advised to seek guidance from specific foreign countries to ensure that patent rights are not lost prematurely.

Applicants also are advised that in the case of inventions made in the United States, the Director of the USPTO must issue a license before applicants can apply for a patent in a foreign country. The filing of a U.S. patent application serves as a request for a foreign filing license. The application's filing receipt contains further information and guidance as to the status of applicant's license for foreign filing.

Applicants may wish to consult the USPTO booklet, "General Information Concerning Patents" (specifically, the section entitled "Treaties and Foreign Patents") for more information on timeframes and deadlines for filing foreign patent applications. The guide is available either by contacting the USPTO Contact Center at 800-786-9199, or it can be viewed on the USPTO website at http://www.uspto.gov/web/offices/pac/doc/general/index.html.

For information on preventing theft of your intellectual property (patents, trademarks and copyrights), you may wish to consult the U.S. Government website, http://www.stopfakes.gov. Part of a Department of Commerce initiative, this website includes self-help "toolkits" giving innovators guidance on how to protect intellectual property in specific countries such as China, Korea and Mexico. For questions regarding patent enforcement issues, applicants may call the U.S. Government hotline at 1-866-999-HALT (1-866-999-4158).

LICENSE FOR FOREIGN FILING UNDER

Title 35, United States Code, Section 184

Title 37, Code of Federal Regulations, 5.11 & 5.15

GRANTED

The applicant has been granted a license under 35 U.S.C. 184, if the phrase "IF REQUIRED, FOREIGN FILING LICENSE GRANTED" followed by a date appears on this form. Such licenses are issued in all applications where the conditions for issuance of a license have been met, regardless of whether or not a license may be required as set forth in 37 CFR 5.15. The scope and limitations of this license are set forth in 37 CFR 5.15(a) unless an earlier license has been issued under 37 CFR 5.15(b). The license is subject to revocation upon written notification. The

date indicated is the effective date of the license, unless an earlier license of similar scope has been granted under 37 CFR 5.13 or 5.14.

This license is to be retained by the licensee and may be used at any time on or after the effective date thereof unless it is revoked. This license is automatically transferred to any related applications(s) filed under 37 CFR 1.53(d). This license is not retroactive.

The grant of a license does not in any way lessen the responsibility of a licensee for the security of the subject matter as imposed by any Government contract or the provisions of existing laws relating to espionage and the national security or the export of technical data. Licensees should apprise themselves of current regulations especially with respect to certain countries, of other agencies, particularly the Office of Defense Trade Controls, Department of State (with respect to Arms, Munitions and Implements of War (22 CFR 121-128)); the Bureau of Industry and Security, Department of Commerce (15 CFR parts 730-774); the Office of Foreign AssetsControl, Department of Treasury (31 CFR Parts 500+) and the Department of Energy.

NOT GRANTED

No license under 35 U.S.C. 184 has been granted at this time, if the phrase "IF REQUIRED, FOREIGN FILING LICENSE GRANTED" DOES NOT appear on this form. Applicant may still petition for a license under 37 CFR 5.12, if a license is desired before the expiration of 6 months from the filing date of the application. If 6 months has lapsed from the filing date of this application and the licensee has not received any indication of a secrecy order under 35 U.S.C. 181, the licensee may foreign file the application pursuant to 37 CFR 5.15(b).

UNITED STATES PATENT AND TRADEMARK OFFICE

COMMISSIONER FOR PATENTS
UNITED STATES PATENT AND TRADEMARK OFFICE
P.O. BOX 1450
ALEXANDRIA, VA 22313-1450
www.uspto.gov

JAKE MASLOW, DIRECTOR
CUNY, TECHNOLOGY COMMERCIALIZATION OFFICE
ROOM 628
535 EAST 80TH STREET
NEW YORK, NY 10021

COPY MAILED

JAN 16 2008

OFFICE OF PETITIONS

In re Application of
Sheldon Weinbaum, et al.
Application No. 60/848,027
Filed: September 28, 2006
Attorney Docket No.: 06A0240

ON PETITION

This is a decision on the petition under 37 CFR 1.137(b), filed July 27, 2007, to revive the above-identified provisional application.

There is no indication that the person signing the instant petition was ever given a power of attorney or authorization of agent to prosecute the above-identified application. However, in accordance with 37 CFR 1.34(a), the signature of Flynn Barrison appearing on the petition shall constitute a representation to the United States Patent and Trademark Office that he is authorized to represent the particular party on whose behalf he acts. Under the circumstances of this case, a courtesy copy of this decision is being mailed to petitioner.

The petition is **GRANTED**.

The application became abandoned for a failure to timely file the basic filing fee and surcharge required in a Notice to File Missing Parts of Provisional Application mailed October 20, 2006. A Notice of Abandonment was mailed on June 22, 2007. In response, on July 27, 2007, the present petition was filed. It is noted that the petition suggests an amendment is enclosed; however, no amendment is found.

The petition satisfies the requirements of 37 CFR 1.137(b) in that petitioner has supplied (1) the reply in the form of the filing fee of $100 and the $25 surcharge; (2) the petition fee of $750; and (3) an adequate statement of unintentional delay.

Subject to the provisions of 35 U.S.C. § 119(e)(3) and § 1.7(b), a provisional application will not be regarded as pending after twelve months from its filing date under any circumstances.

Telephone inquiries concerning this decision should be directed to the undersigned at (571) 272-3204.

Sherry D. Brinkley
Petitions Examiner
Office of Petitions

cc: DARBY & DARBY P.C.
P.O. BOX 770
CHURCH STREET STATION
NEW YORK, NY 10008-0770

UNITED STATES PATENT AND TRADEMARK OFFICE

UNITED STATES DEPARTMENT OF COMMERCE
United States Patent and Trademark Office
Address: COMMISSIONER FOR PATENTS
P.O. Box 1450
Alexandria, Virginia 22313-1450
www.uspto.gov

APPL NO.	FILING OR 371(c) DATE	ART UNIT	FIL FEE REC'D	ATTY.DOCKET NO	TOT CLMS	IND CLMS
60/848,508	09/27/2006		100			

CONFIRMATION NO. 9970

CORRECTED FILING RECEIPT

OC000000022762279

Richard J. Rogachevsky
P. O. Box 270051
Honolulu, HI 96827-0051

Date Mailed: 03/06/2007

Receipt is acknowledged of this provisional Patent Application. It will not be examined for patentability and will become abandoned not later than twelve months after its filing date. Be sure to provide the U.S. APPLICATION NUMBER, FILING DATE, NAME OF APPLICANT, and TITLE OF INVENTION when inquiring about this application. Fees transmitted by check or draft are subject to collection. Please verify the accuracy of the data presented on this receipt. **If an error is noted on this Filing Receipt, please mail to the Commissioner for Patents P.O. Box 1450 Alexandria Va 22313-1450. Please provide a copy of this Filing Receipt with the changes noted thereon. If you received a "Notice to File Missing Parts" for this application, please submit any corrections to this Filing Receipt with your reply to the Notice. When the USPTO processes the reply to the Notice, the USPTO will generate another Filing Receipt incorporating the requested corrections (if appropriate).**

Applicant(s)

Richard J. Rogachevsky, Honolulu, HI;

Power of Attorney: None

If Required, Foreign Filing License Granted: 10/12/2006

The country code and number of your priority application, to be used for filing abroad under the Paris Convention, is US60/848,508

Projected Publication Date: None, application is not eligible for pre-grant publication

Non-Publication Request: Not applicable

Early-Publication Request: Not applicable

**** SMALL ENTITY ****

Title

Full spine mobilization and decompression devices

PROTECTING YOUR INVENTION OUTSIDE THE UNITED STATES

Since the rights granted by a U.S. patent extend only throughout the territory of the United States and have no effect in a foreign country, an inventor who wishes patent protection in another country must apply for a patent in a specific country or in regional patent offices. Applicants may wish to consider the filing of an international application under the Patent Cooperation Treaty (PCT). An international (PCT) application generally has the same effect as a regular national patent application in each PCT-member country. The PCT process **simplifies** the filing of patent applications on the same invention in member countries, but **does not result** in a grant of "an international patent" and does not eliminate the need of applicants to file additional documents and fees in countries where patent protection is desired.

Almost every country has its own patent law, and a person desiring a patent in a particular country must make an application for patent in that country in accordance with its particular laws. Since the laws of many countries differ in various respects from the patent law of the United States, applicants are advised to seek guidance from specific foreign countries to ensure that patent rights are not lost prematurely.

Applicants also are advised that in the case of inventions made in the United States, the Director of the USPTO must issue a license before applicants can apply for a patent in a foreign country. The filing of a U.S. patent application serves as a request for a foreign filing license. The application's filing receipt contains further information and guidance as to the status of applicant's license for foreign filing.

Applicants may wish to consult the USPTO booklet, "General Information Concerning Patents" (specifically, the section entitled "Treaties and Foreign Patents") for more information on timeframes and deadlines for filing foreign patent applications. The guide is available either by contacting the USPTO Contact Center at 800-786-9199, or it can be viewed on the USPTO website at http://www.uspto.gov/web/offices/pac/doc/general/index.html.

For information on preventing theft of your intellectual property (patents, trademarks and copyrights), you may wish to consult the U.S. Government website, http://www.stopfakes.gov. Part of a Department of Commerce initiative, this website includes self-help "toolkits" giving innovators guidance on how to protect intellectual property in specific countries such as China, Korea and Mexico. For questions regarding patent enforcement issues, applicants may call the U.S. Government hotline at 1-866-999-HALT (1-866-999-4158).

LICENSE FOR FOREIGN FILING UNDER
Title 35, United States Code, Section 184
Title 37, Code of Federal Regulations, 5.11 & 5.15

GRANTED

The applicant has been granted a license under 35 U.S.C. 184, if the phrase "IF REQUIRED, FOREIGN FILING LICENSE GRANTED" followed by a date appears on this form. Such licenses are issued in all applications where the conditions for issuance of a license have been met, regardless of whether or not a license may be required as set forth in 37 CFR 5.15. The scope and limitations of this license are set forth in 37 CFR 5.15(a) unless an earlier license has been issued under 37 CFR 5.15(b). The license is subject to revocation upon written notification. The date indicated is the effective date of the license, unless an earlier license of similar scope has been granted under 37 CFR 5.13 or 5.14.

This license is to be retained by the licensee and may be used at any time on or after the effective date thereof unless it is revoked. This license is automatically transferred to any related applications(s) filed under 37 CFR 1.53(d). This license is not retroactive.

The grant of a license does not in any way lessen the responsibility of a licensee for the security of the subject matter as imposed by any Government contract or the provisions of existing laws relating to espionage and the national security or the export of technical data. Licensees should apprise themselves of current regulations especially with respect to certain countries, of other agencies, particularly the Office of Defense Trade Controls, Department of State (with respect to Arms, Munitions and Implements of War (22 CFR 121-128)); the Bureau of Industry and Security, Department of Commerce (15 CFR parts 730-774); the Office of Foreign Assets Control, Department of Treasury (31 CFR Parts 500+) and the Department of Energy.

NOT GRANTED

No license under 35 U.S.C. 184 has been granted at this time, if the phrase "IF REQUIRED, FOREIGN FILING LICENSE GRANTED" DOES NOT appear on this form. Applicant may still petition for a license under 37 CFR 5.12, if a license is desired before the expiration of 6 months from the filing date of the application. If 6 months has lapsed from the filing date of this application and the licensee has not received any indication of a secrecy order under 35 U.S.C. 181, the licensee may foreign file the application pursuant to 37 CFR 5.15(b).

UNITED STATES PATENT AND TRADEMARK OFFICE

Commissioner for Patents
United States Patent and Trademark Office
P.O. Box 1450
Alexandria, VA 22313-1450
www.uspto.gov
DIW Apr-07

ABELMAN, FRAYNE & SCHWAB
666 THIRD AVENUE, 10TH FLOOR
NEW YORK NY 10017

COPY MAILED

APR 0 4 2007

OFFICE OF PETITIONS

In re Application of	:	
Philipp et al.	:	
Application No. 60/848,562	:	DECISION GRANTING PETITION
Filed: 28 September, 2006	:	
Atty Dckt No. 207,866	:	

This is a decision in reference to the petition under 37 CFR 1.10(c) filed on 5 December, 2006, requesting that the above-identified application be accorded a filing date of 28 September, 2006, rather than the currently-accorded filing date of 2 October, 2006.

The petition is **granted**.

Petitioners assert that the application was deposited in Express Mail Service on 28 September, 2006. In support, petitioners have provided a copy of the Express Mail Customer Label ER059676388US. Although the "date-in" on the Express Mail label has not been completed, the Express Mail label also contains a postmark. Although the postmark is not legible, a review of the USPS's Intranet Track/Confirm database confirms that Express Mail Item ER059676388US (the same Express Mail number found on the itemized provisional application transmittal sheet accompanying the original application papers located in the official file) was "Enroute" on 28 September, 2006.

As such, the showing of record is that the correct date of deposit in Express Mail is 28 September, 2006.

In view of the above, the petition is granted. No fee is required and none has been charged.

The application is being referred to the Office of Initial Patent Examination (OIPE) for correction of the filing date to 28 September, 2006, and for issuance of a corrected Filing Receipt.

Telephone inquiries related to this decision should be directed to the undersigned at 571-272-3231.

D Wood

Douglas I. Wood
Senior Petitions Attorney
Office of Petitions

UNITED STATES PATENT AND TRADEMARK OFFICE

UNITED STATES DEPARTMENT OF COMMERCE
United States Patent and Trademark Office
Address: COMMISSIONER FOR PATENTS
P.O. Box 1450
Alexandria, Virginia 22313-1450
www.uspto.gov

APPL NO.	FILING OR 371 (c) DATE	ART UNIT	FIL FEE REC'D	ATTY.DOCKET NO	DRAWINGS	TOT CLMS	IND CLMS
60/848,603	09/28/2006		100	207.826	5		

CONFIRMATION NO. 1400

CORRECTED FILING RECEIPT

OC000000021445581

38137
ABELMAN, FRAYNE & SCHWAB
666 THIRD AVENUE, 10TH FLOOR
NEW YORK, NY 10017

Date Mailed: 12/01/2006

Receipt is acknowledged of this provisional Patent Application. It will not be examined for patentability and will become abandoned not later than twelve months after its filing date. Be sure to provide the U.S. APPLICATION NUMBER, FILING DATE, NAME OF APPLICANT, and TITLE OF INVENTION when inquiring about this application. Fees transmitted by check or draft are subject to collection. Please verify the accuracy of the data presented on this receipt. **If an error is noted on this Filing Receipt, please mail to the Commissioner for Patents P.O. Box 1450 Alexandria Va 22313-1450. Please provide a copy of this Filing Receipt with the changes noted thereon. If you received a "Notice to File Missing Parts" for this application, please submit any corrections to this Filing Receipt with your reply to the Notice. When the USPTO processes the reply to the Notice, the USPTO will generate another Filing Receipt incorporating the requested corrections (if appropriate).**

Applicant(s)

David Yoskowitz, East Rutherford, NJ;

Power of Attorney:

Anthony Natoli--36223

If Required, Foreign Filing License Granted: 10/11/2006

The country code and number of your priority application, to be used for filing abroad under the Paris Convention, is US60/848,603

Projected Publication Date: None, application is not eligible for pre-grant publication

Non-Publication Request: Not applicable

Early-Publication Request: Not applicable

**** SMALL ENTITY ****

Title

Stackable corner piece

PROTECTING YOUR INVENTION OUTSIDE THE UNITED STATES

Since the rights granted by a U.S. patent extend only throughout the territory of the United States and have no effect in a foreign country, an inventor who wishes patent protection in another country must apply for a patent in a specific country or in regional patent offices. Applicants may wish to consider the filing of an international application under the Patent Cooperation Treaty (PCT). An international (PCT) application generally has the same effect as a regular national patent application in each PCT-member country. The PCT process **simplifies** the filing of patent applications on the same invention in member countries, but **does not result** in a grant of "an international patent" and does not eliminate the need of applicants to file additional documents and fees in countries where patent protection is desired.

Almost every country has its own patent law, and a person desiring a patent in a particular country must make an application for patent in that country in accordance with its particular laws. Since the laws of many countries differ in various respects from the patent law of the United States, applicants are advised to seek guidance from specific foreign countries to ensure that patent rights are not lost prematurely.

Applicants also are advised that in the case of inventions made in the United States, the Director of the USPTO must issue a license before applicants can apply for a patent in a foreign country. The filing of a U.S. patent application serves as a request for a foreign filing license. The application's filing receipt contains further information and guidance as to the status of applicant's license for foreign filing.

Applicants may wish to consult the USPTO booklet, "General Information Concerning Patents" (specifically, the section entitled "Treaties and Foreign Patents") for more information on timeframes and deadlines for filing foreign patent applications. The guide is available either by contacting the USPTO Contact Center at 800-786-9199, or it can be viewed on the USPTO website at http://www.uspto.gov/web/offices/pac/doc/general/index.html.

For information on preventing theft of your intellectual property (patents, trademarks and copyrights), you may wish to consult the U.S. Government website, http://www.stopfakes.gov. Part of a Department of Commerce initiative, this website includes self-help "toolkits" giving innovators guidance on how to protect intellectual property in specific countries such as China, Korea and Mexico. For questions regarding patent enforcement issues, applicants may call the U.S. Government hotline at 1-866-999-HALT (1-866-999-4158).

LICENSE FOR FOREIGN FILING UNDER
Title 35, United States Code, Section 184
Title 37, Code of Federal Regulations, 5.11 & 5.15

GRANTED

The applicant has been granted a license under 35 U.S.C. 184, if the phrase "IF REQUIRED, FOREIGN FILING LICENSE GRANTED" followed by a date appears on this form. Such licenses are issued in all applications where the conditions for issuance of a license have been met, regardless of whether or not a license may be required as set forth in 37 CFR 5.15. The scope and limitations of this license are set forth in 37 CFR 5.15(a) unless an earlier license has been issued under 37 CFR 5.15(b). The license is subject to revocation upon written notification. The date indicated is the effective date of the license, unless an earlier license of similar scope has been granted under 37 CFR 5.13 or 5.14.

This license is to be retained by the licensee and may be used at any time on or after the effective date thereof unless it is revoked. This license is automatically transferred to any related applications(s) filed under 37 CFR 1.53(d). This license is not retroactive.

The grant of a license does not in any way lessen the responsibility of a licensee for the security of the subject matter as imposed by any Government contract or the provisions of existing laws relating to espionage and the national security or the export of technical data. Licensees should apprise themselves of current regulations especially with respect to certain countries, of other agencies, particularly the Office of Defense Trade Controls, Department of State (with respect to Arms, Munitions and Implements of War (22 CFR 121-128)); the Bureau of

Industry and Security, Department of Commerce (15 CFR parts 730-774); the Office of Foreign Assets Control, Department of Treasury (31 CFR Parts 500+) and the Department of Energy.

NOT GRANTED

No license under 35 U.S.C. 184 has been granted at this time, if the phrase "IF REQUIRED, FOREIGN FILING LICENSE GRANTED" DOES NOT appear on this form. Applicant may still petition for a license under 37 CFR 5.12, if a license is desired before the expiration of 6 months from the filing date of the application. If 6 months has lapsed from the filing date of this application and the licensee has not received any indication of a secrecy order under 35 U.S.C. 181, the licensee may foreign file the application pursuant to 37 CFR 5.15(b).

UNITED STATES PATENT AND TRADEMARK OFFICE

Commissioner for Patents
United States Patent and Trademark Office
P.O. Box 1450
Alexandria, VA 22313-1450
www.uspto.gov

FINNEGAN, HENDERSON, FARABOW, GARRETT & DUNNER LLP
901 NEW YORK AVENUE, NW
WASHINGTON DC 20001-4413

COPY MAILED

SEP 2 9 2008

OFFICE OF PETITIONS

In re Application of	:	
Shiang-Rung Ye et al	:	
Application No. 60/848,641	:	DECISION ON PETITION
Filed: October 3, 2006	:	
Attorney Docket No. 06720.6039-00000	:	

This is a decision on the petition under 37 CFR 1.182, filed, March 24, 2008, to correct the spelling of the name of inventor "Hsiang-Jung Yeh" to – Shiang-Rung Ye – and inventor "Wen-Ho Sheen" to – Wern-Ho Sheen.

The petition is **GRANTED**.

Office records have been corrected to reflect the correct spelling of the above-named inventors. A corrected Filing Receipt, which sets forth the correct spelling of the above-named inventors, accompanies this decision on petition.

As authorized, the $400 fee for the petition under 37 CFR 1.182 has been assessed to petitioner's deposit account.

Any questions concerning this matter may be directed to the undersigned at (571) 272-3208.

Karen Creasy

Karen Creasy
Petitions Examiner
Office of Petitions

ATTACHMENT: Corrected Filing Receipt

UNITED STATES PATENT AND TRADEMARK OFFICE

UNITED STATES DEPARTMENT OF COMMERCE
United States Patent and Trademark Office
Address: COMMISSIONER FOR PATENTS
P.O. Box 1450
Alexandria, Virginia 22313-1450
www.uspto.gov

APPLICATION NUMBER	FILING or 371(c) DATE	GRP ART UNIT	FIL FEE REC'D	ATTY.DOCKET.NO	TOT CLAIMS	IND CLAIMS
60/848,641	10/03/2006		200	06720.6039-00000		

CONFIRMATION NO. 3327

CORRECTED FILING RECEIPT

22852
FINNEGAN, HENDERSON, FARABOW, GARRETT & DUNNER LLP
901 NEW YORK AVENUE, NW
WASHINGTON, DC 20001-4413

OC000000032328012

Date Mailed: 09/29/2008

Receipt is acknowledged of this provisional patent application. It will not be examined for patentability and will become abandoned not later than twelve months after its filing date. Any correspondence concerning the application must include the following identification information: the U.S. APPLICATION NUMBER, FILING DATE, NAME OF APPLICANT, and TITLE OF INVENTION. Fees transmitted by check or draft are subject to collection. Please verify the accuracy of the data presented on this receipt. **If an error is noted on this Filing Receipt, please submit a written request for a Filing Receipt Correction. Please provide a copy of this Filing Receipt with the changes noted thereon. If you received a "Notice to File Missing Parts" for this application, please submit any corrections to this Filing Receipt with your reply to the Notice. When the USPTO processes the reply to the Notice, the USPTO will generate another Filing Receipt incorporating the requested corrections**

Applicant(s)

Shiang-Rung Ye, Hsinchu, TAIWAN;
Wern-Ho Sheen, Hsinchu, TAIWAN;

Power of Attorney:
Richard Burgujian--31744

If Required, Foreign Filing License Granted: 10/13/2006

The country code and number of your priority application, to be used for filing abroad under the Paris Convention, is **US 60/848,641**

Projected Publication Date: None, application is not eligible for pre-grant publication

Non-Publication Request: No

Early Publication Request: No

Title

Systems and methods for dynamic granularity control on buffer reporting

PROTECTING YOUR INVENTION OUTSIDE THE UNITED STATES

Since the rights granted by a U.S. patent extend only throughout the territory of the United States and have no effect in a foreign country, an inventor who wishes patent protection in another country must apply for a patent in a specific country or in regional patent offices. Applicants may wish to consider the filing of an international application under the Patent Cooperation Treaty (PCT). An international (PCT) application generally has the same effect as a regular national patent application in each PCT-member country. The PCT process **simplifies** the filing of patent applications on the same invention in member countries, but **does not result** in a grant of "an international

patent" and does not eliminate the need of applicants to file additional documents and fees in countries where patent protection is desired.

Almost every country has its own patent law, and a person desiring a patent in a particular country must make an application for patent in that country in accordance with its particular laws. Since the laws of many countries differ in various respects from the patent law of the United States, applicants are advised to seek guidance from specific foreign countries to ensure that patent rights are not lost prematurely.

Applicants also are advised that in the case of inventions made in the United States, the Director of the USPTO must issue a license before applicants can apply for a patent in a foreign country. The filing of a U.S. patent application serves as a request for a foreign filing license. The application's filing receipt contains further information and guidance as to the status of applicant's license for foreign filing.

Applicants may wish to consult the USPTO booklet, "General Information Concerning Patents" (specifically, the section entitled "Treaties and Foreign Patents") for more information on timeframes and deadlines for filing foreign patent applications. The guide is available either by contacting the USPTO Contact Center at 800-786-9199, or it can be viewed on the USPTO website at http://www.uspto.gov/web/offices/pac/doc/general/index.html.

For information on preventing theft of your intellectual property (patents, trademarks and copyrights), you may wish to consult the U.S. Government website, http://www.stopfakes.gov. Part of a Department of Commerce initiative, this website includes self-help "toolkits" giving innovators guidance on how to protect intellectual property in specific countries such as China, Korea and Mexico. For questions regarding patent enforcement issues, applicants may call the U.S. Government hotline at 1-866-999-HALT (1-866-999-4158).

LICENSE FOR FOREIGN FILING UNDER

Title 35, United States Code, Section 184

Title 37, Code of Federal Regulations, 5.11 & 5.15

GRANTED

The applicant has been granted a license under 35 U.S.C. 184, if the phrase "IF REQUIRED, FOREIGN FILING LICENSE GRANTED" followed by a date appears on this form. Such licenses are issued in all applications where the conditions for issuance of a license have been met, regardless of whether or not a license may be required as set forth in 37 CFR 5.15. The scope and limitations of this license are set forth in 37 CFR 5.15(a) unless an earlier license has been issued under 37 CFR 5.15(b). The license is subject to revocation upon written notification. The date indicated is the effective date of the license, unless an earlier license of similar scope has been granted under 37 CFR 5.13 or 5.14.

This license is to be retained by the licensee and may be used at any time on or after the effective date thereof unless it is revoked. This license is automatically transferred to any related applications(s) filed under 37 CFR 1.53(d). This license is not retroactive.

The grant of a license does not in any way lessen the responsibility of a licensee for the security of the subject matter as imposed by any Government contract or the provisions of existing laws relating to espionage and the national security or the export of technical data. Licensees should apprise themselves of current regulations especially with respect to certain countries, of other agencies, particularly the Office of Defense Trade Controls, Department of State (with respect to Arms, Munitions and Implements of War (22 CFR 121-128)); the Bureau of Industry and

Security, Department of Commerce (15 CFR parts 730-774); the Office of Foreign AssetsControl, Department of Treasury (31 CFR Parts 500+) and the Department of Energy.

NOT GRANTED

No license under 35 U.S.C. 184 has been granted at this time, if the phrase "IF REQUIRED, FOREIGN FILING LICENSE GRANTED" DOES NOT appear on this form. Applicant may still petition for a license under 37 CFR 5.12, if a license is desired before the expiration of 6 months from the filing date of the application. If 6 months has lapsed from the filing date of this application and the licensee has not received any indication of a secrecy order under 35 U.S.C. 181, the licensee may foreign file the application pursuant to 37 CFR 5.15(b).

UNITED STATES PATENT AND TRADEMARK OFFICE

Commissioner for Patents
United States Patent and Trademark Office
P.O. Box 1450
Alexandria, VA 22313-1450
www.uspto.gov

L.C. BEGIN & ASSOCIATES, PLLC
510 HIGHLAND AVENUE
PMB 403
MILFORD, MI 48381

COPY MAILED

DEC 21 2006

OFFICE OF PETITIONS

In re Application of	:	
Khandhadia et al.	:	
Application No. 60/848682	:	
Filing or 371(c) Date: 09/30/2006	:	
Attorney Docket Number:	:	DECISION
5702-00164	:	ON PETITION

This is a decision on the "Petition Under 37 C.F.R. § 1.10(d) for Corrected of the Filing Date", filed November 2, 2006. the petition is properly treated under 37 CFR 1.10(c).

This Petition is hereby **granted**.

Petitioner alleges that the application was deposited in Express Mail service on November 29, 2005. In support of this assertion, the petition is accompanied by a copy of Express Mail label No. EV817094445US. A review of the Express Mail label, No. EV817094445US, reveals that the "Date In" indicated on the Express Mail label is September 30, 2006. The same Express Mail label number was placed on the original application papers located in the official file.

In view of the above, the petition is **granted**. No fee has been charged and none is due.

The application is being referred to the Office of Initial Patent Examination for correction of the filing date to September 30, 2006, and for the mailing of a Corrected Filing Receipt.

Telephone inquiries concerning this matter should be directed to the undersigned at (571) 272-3232.

Derek L. Woods
Attorney
Office of Petitions

UNITED STATES PATENT AND TRADEMARK OFFICE

Commissioner for Patents
United States Patent and Trademark Office
P.O. Box 1450
Alexandria, VA 22313-1450
www.uspto.gov

DECHERT, LLP
P.O. BOX 10004
PALO ALTO, CA 94303-0961

COPY MAILED

JUN 29 2007

OFFICE OF PETITIONS

In re Application of	:	
Lorraine Joan Giver et al	:	
Application No. 60/848,950	:	DECISION GRANTING
Filed: October 2, 2006	:	PETITION
Attorney Docket No. 376247-011USP1	:	

This is a decision on the petition, filed November 22, 2006, requesting that the above-identified application be accorded a filing date of October 2, 2006, rather than the presently accorded date of October 3, 2006. The petition is properly treated as a petition under 37 CFR 1.10(c).

Petitioner alleges that the application was deposited in Express Mail Service on October 2, 2006. In support of this allegation, petitioner has submitted a copy of Express Mail label receipt number EL 989611748 US, which bears a U.S. Postal Service (USPS) date stamp of October 2, 2006. Further, in an independent search of the USPS Express Mail Track and Confirm record for the Express Mail package in question, it was found that the package was entrusted to the USPS on October 2, 2006 at the San Francisco, CA, USPO at 11:43pm. Applicants are alleging that the correct date of mailing pursuant to 37 CFR 1.10 is October 2, 2006. The above-noted Express Mail number appears on the originally filed application papers of this file.

The Office considers the date the paper or fee is shown to have been deposited as "Express Mail" to be the "date-in" on the Express Mail label; MPEP 513. The evidence is convincing that the application was deposited as "Express Mail" with the U. S. Postal Service on October 2, 2006.

In view of the above, the petition is **GRANTED**.

This application file is being referred to the Office of Initial Patent Examination (OIPE) for correction of the filing date to October 2, 2006 and for issuance of a corrected filing receipt.

Telephone inquiries relating to this decision should be directed Irvin Dingle at (571) 272-3210. Telephone inquiries related to OIPE processing should be directed to their hotline at (571) 272-4100.

Frances Hicks

Frances Hicks
Petition Examiner
Office of Petitions

UNITED STATES PATENT AND TRADEMARK OFFICE

COMMISSIONER FOR PATENTS
UNITED STATES PATENT AND TRADEMARK OFFICE
P.O. BOX 1450
ALEXANDRIA, VA 22313-1450
www.uspto.gov

COPY MAILED

SEP 17 2007

OFFICE OF PETITIONS

ELIZABETH S. PETTUS
9718 BAIRD AVENUE
LOS ANGELES CA 90002

In re Application of	:
Pettus, et al.	:
Application No. 60/849,025	: DECISION ON PETITION
Filed: October 4, 2006	:
Docket No.: SHOULDER SWEAT	:
ABSORBING PAD	:

This is a decision on the petition under 37 CFR 1.181, filed July 26, 2007, to withdraw the holding of abandonment.

The petition is **GRANTED**.

The application was held abandoned for failure to timely submit a properly reply to a Notice purportedly mailed October 16, 2006. Notice of Abandonment was mailed June 27, 2007.

Petitioner asserts non-receipt of the Notice.

A careful review of the record does not establish that a Notice was actually mailed on the date indicated in the Notice of Abandonment.

In view thereof the Notice of Abandonment is hereby **VACATED** and the holding of abandonment is **WITHDRAWN**.

The application file is being forwarded to the Office of Initial Patent Examination for re-mailing of the Notice. The time period for reply will be set in the re-mailed Notice.

Telephone inquiries concerning this matter may be directed to the undersigned at 571-272-3205.

Alesia M. Brown
Petitions Attorney
Office of Petitions

UNITED STATES PATENT AND TRADEMARK OFFICE

UNITED STATES DEPARTMENT OF COMMERCE
United States Patent and Trademark Office
Address: COMMISSIONER FOR PATENTS
P.O. Box 1450
Alexandria, Virginia 22313-1450
www.uspto.gov

APPL NO.	FILING OR 371 (c) DATE	ART UNIT	FIL FEE REC'D	ATTY.DOCKET NO	DRAWINGS	TOT CLMS	IND CLMS
60/849,100	10/02/2006		200	219898	2		

CONFIRMATION NO. 5598

CORRECTED FILING RECEIPT

OC000000021148653

29391
BEUSSE WOLTER SANKS MORA & MAIRE, P. A.
390 NORTH ORANGE AVENUE
SUITE 2500
ORLANDO, FL 32801

Date Mailed: 11/14/2006

Receipt is acknowledged of this provisional Patent Application. It will not be examined for patentability and will become abandoned not later than twelve months after its filing date. Be sure to provide the U.S. APPLICATION NUMBER, FILING DATE, NAME OF APPLICANT, and TITLE OF INVENTION when inquiring about this application. Fees transmitted by check or draft are subject to collection. Please verify the accuracy of the data presented on this receipt. **If an error is noted on this Filing Receipt, please mail to the Commissioner for Patents P.O. Box 1450 Alexandria Va 22313-1450. Please provide a copy of this Filing Receipt with the changes noted thereon. If you received a "Notice to File Missing Parts" for this application, please submit any corrections to this Filing Receipt with your reply to the Notice. When the USPTO processes the reply to the Notice, the USPTO will generate another Filing Receipt incorporating the requested corrections (if appropriate).**

Applicant(s)

Wolfgang Daum, Erie, PA;
Glenn R. Shaffer, Erie, PA;

Power of Attorney:

Terry Sanks--45069

If Required, Foreign Filing License Granted: 10/13/2006

The country code and number of your priority application, to be used for filing abroad under the Paris Convention, is US60/849,100

Projected Publication Date: None, application is not eligible for pre-grant publication

Non-Publication Request: Not applicable

Early-Publication Request: Not applicable

Title

System and method for fuel efficiency improvement via optimized train power makeup

PROTECTING YOUR INVENTION OUTSIDE THE UNITED STATES

Since the rights granted by a U.S. patent extend only throughout the territory of the United States and have no effect in a foreign country, an inventor who wishes patent protection in another country must apply for a patent in a specific country or in regional patent offices. Applicants may wish to consider the filing of an international application under the Patent Cooperation Treaty (PCT). An international (PCT) application generally has the same effect as a regular national patent application in each PCT-member country. The PCT process **simplifies** the filing of patent applications on the same invention in member countries, but **does not result** in a grant of "an international patent" and does not eliminate the need of applicants to file additional documents and fees in countries where patent protection is desired.

Almost every country has its own patent law, and a person desiring a patent in a particular country must make an application for patent in that country in accordance with its particular laws. Since the laws of many countries differ in various respects from the patent law of the United States, applicants are advised to seek guidance from specific foreign countries to ensure that patent rights are not lost prematurely.

Applicants also are advised that in the case of inventions made in the United States, the Director of the USPTO must issue a license before applicants can apply for a patent in a foreign country. The filing of a U.S. patent application serves as a request for a foreign filing license. The application's filing receipt contains further information and guidance as to the status of applicant's license for foreign filing.

Applicants may wish to consult the USPTO booklet, "General Information Concerning Patents" (specifically, the section entitled "Treaties and Foreign Patents") for more information on timeframes and deadlines for filing foreign patent applications. The guide is available either by contacting the USPTO Contact Center at 800-786-9199, or it can be viewed on the USPTO website at http://www.uspto.gov/web/offices/pac/doc/general/index.html.

For information on preventing theft of your intellectual property (patents, trademarks and copyrights), you may wish to consult the U.S. Government website, http://www.stopfakes.gov. Part of a Department of Commerce initiative, this website includes self-help "toolkits" giving innovators guidance on how to protect intellectual property in specific countries such as China, Korea and Mexico. For questions regarding patent enforcement issues, applicants may call the U.S. Government hotline at 1-866-999-HALT (1-866-999-4158).

LICENSE FOR FOREIGN FILING UNDER
Title 35, United States Code, Section 184
Title 37, Code of Federal Regulations, 5.11 & 5.15

GRANTED

The applicant has been granted a license under 35 U.S.C. 184, if the phrase "IF REQUIRED, FOREIGN FILING LICENSE GRANTED" followed by a date appears on this form. Such licenses are issued in all applications where the conditions for issuance of a license have been met, regardless of whether or not a license may be required as set forth in 37 CFR 5.15. The scope and limitations of this license are set forth in 37 CFR 5.15(a) unless an earlier license has been issued under 37 CFR 5.15(b). The license is subject to revocation upon written notification. The date indicated is the effective date of the license, unless an earlier license of similar scope has been granted under 37 CFR 5.13 or 5.14.

This license is to be retained by the licensee and may be used at any time on or after the effective date thereof unless it is revoked. This license is automatically transferred to any related applications(s) filed under 37 CFR 1.53(d). This license is not retroactive.

The grant of a license does not in any way lessen the responsibility of a licensee for the security of the subject matter as imposed by any Government contract or the provisions of existing laws relating to espionage and the national security or the export of technical data. Licensees should apprise themselves of current regulations especially with respect to certain countries, of other agencies, particularly the Office of Defense Trade Controls, Department of State (with respect to Arms, Munitions and Implements of War (22 CFR 121-128)); the Bureau of

Industry and Security, Department of Commerce (15 CFR parts 730-774); the Office of Foreign Assets Control, Department of Treasury (31 CFR Parts 500+) and the Department of Energy.

NOT GRANTED

No license under 35 U.S.C. 184 has been granted at this time, if the phrase "IF REQUIRED, FOREIGN FILING LICENSE GRANTED" DOES NOT appear on this form. Applicant may still petition for a license under 37 CFR 5.12, if a license is desired before the expiration of 6 months from the filing date of the application. If 6 months has lapsed from the filing date of this application and the licensee has not received any indication of a secrecy order under 35 U.S.C. 181, the licensee may foreign file the application pursuant to 37 CFR 5.15(b).

UNITED STATES PATENT AND TRADEMARK OFFICE

UNITED STATES DEPARTMENT OF COMMERCE
United States Patent and Trademark Office
Address: COMMISSIONER FOR PATENTS
P.O. Box 1450
Alexandria, Virginia 22313-1450
www.uspto.gov

APPL NO.	FILING OR 371 (c) DATE	ART UNIT	FIL FEE REC'D	ATTY.DOCKET NO	DRAWINGS	TOT CLMS	IND CLMS
60/849,101	10/02/2006		250	219956	2		

CONFIRMATION NO. 5596

CORRECTED FILING RECEIPT

OC000000021632815

29391
BEUSSE WOLTER SANKS MORA & MAIRE, P. A.
390 NORTH ORANGE AVENUE
SUITE 2500
ORLANDO, FL 32801

Date Mailed: 12/15/2006

Receipt is acknowledged of this provisional Patent Application. It will not be examined for patentability and will become abandoned not later than twelve months after its filing date. Be sure to provide the U.S. APPLICATION NUMBER, FILING DATE, NAME OF APPLICANT, and TITLE OF INVENTION when inquiring about this application. Fees transmitted by check or draft are subject to collection. Please verify the accuracy of the data presented on this receipt. **If an error is noted on this Filing Receipt, please mail to the Commissioner for Patents P.O. Box 1450 Alexandria Va 22313-1450. Please provide a copy of this Filing Receipt with the changes noted thereon. If you received a "Notice to File Missing Parts" for this application, please submit any corrections to this Filing Receipt with your reply to the Notice. When the USPTO processes the reply to the Notice, the USPTO will generate another Filing Receipt incorporating the requested corrections (if appropriate).**

Applicant(s)

Wolfgang Daum, Erie, PA;
Glenn R. Shaffer, Erie, PA;
Evren Eryurek, Melbourne, FL;

Power of Attorney:

Terry Sanks--45069

If Required, Foreign Filing License Granted: 10/13/2006

The country code and number of your priority application, to be used for filing abroad under the Paris Convention, is US60/849,101

Projected Publication Date: None, application is not eligible for pre-grant publication

Non-Publication Request: Not applicable

Early-Publication Request: Not applicable

Title

System and method for fuel efficiency improvement for multi-section tracks in an intersecting

railroad network with real time update capability

PROTECTING YOUR INVENTION OUTSIDE THE UNITED STATES

Since the rights granted by a U.S. patent extend only throughout the territory of the United States and have no effect in a foreign country, an inventor who wishes patent protection in another country must apply for a patent in a specific country or in regional patent offices. Applicants may wish to consider the filing of an international application under the Patent Cooperation Treaty (PCT). An international (PCT) application generally has the same effect as a regular national patent application in each PCT-member country. The PCT process **simplifies** the filing of patent applications on the same invention in member countries, but **does not result** in a grant of "an international patent" and does not eliminate the need of applicants to file additional documents and fees in countries where patent protection is desired.

Almost every country has its own patent law, and a person desiring a patent in a particular country must make an application for patent in that country in accordance with its particular laws. Since the laws of many countries differ in various respects from the patent law of the United States, applicants are advised to seek guidance from specific foreign countries to ensure that patent rights are not lost prematurely.

Applicants also are advised that in the case of inventions made in the United States, the Director of the USPTO must issue a license before applicants can apply for a patent in a foreign country. The filing of a U.S. patent application serves as a request for a foreign filing license. The application's filing receipt contains further information and guidance as to the status of applicant's license for foreign filing.

Applicants may wish to consult the USPTO booklet, "General Information Concerning Patents" (specifically, the section entitled "Treaties and Foreign Patents") for more information on timeframes and deadlines for filing foreign patent applications. The guide is available either by contacting the USPTO Contact Center at 800-786-9199, or it can be viewed on the USPTO website at http://www.uspto.gov/web/offices/pac/doc/general/index.html.

For information on preventing theft of your intellectual property (patents, trademarks and copyrights), you may wish to consult the U.S. Government website, http://www.stopfakes.gov. Part of a Department of Commerce initiative, this website includes self-help "toolkits" giving innovators guidance on how to protect intellectual property in specific countries such as China, Korea and Mexico. For questions regarding patent enforcement issues, applicants may call the U.S. Government hotline at 1-866-999-HALT (1-866-999-4158).

LICENSE FOR FOREIGN FILING UNDER
Title 35, United States Code, Section 184
Title 37, Code of Federal Regulations, 5.11 & 5.15

GRANTED

The applicant has been granted a license under 35 U.S.C. 184, if the phrase "IF REQUIRED, FOREIGN FILING LICENSE GRANTED" followed by a date appears on this form. Such licenses are issued in all applications where the conditions for issuance of a license have been met, regardless of whether or not a license may be required as set forth in 37 CFR 5.15. The scope and limitations of this license are set forth in 37 CFR 5.15(a) unless an earlier license has been issued under 37 CFR 5.15(b). The license is subject to revocation upon written notification. The date indicated is the effective date of the license, unless an earlier license of similar scope has been granted under 37 CFR 5.13 or 5.14.

This license is to be retained by the licensee and may be used at any time on or after the effective date thereof unless it is revoked. This license is automatically transferred to any related applications(s) filed under 37 CFR 1.53(d). This license is not retroactive.

The grant of a license does not in any way lessen the responsibility of a licensee for the security of the subject matter as imposed by any Government contract or the provisions of existing laws relating to espionage and the

national security or the export of technical data. Licensees should apprise themselves of current regulations especially with respect to certain countries, of other agencies, particularly the Office of Defense Trade Controls, Department of State (with respect to Arms, Munitions and Implements of War (22 CFR 121-128)); the Bureau of Industry and Security, Department of Commerce (15 CFR parts 730-774); the Office of Foreign Assets Control, Department of Treasury (31 CFR Parts 500+) and the Department of Energy.

NOT GRANTED

No license under 35 U.S.C. 184 has been granted at this time, if the phrase "IF REQUIRED, FOREIGN FILING LICENSE GRANTED" DOES NOT appear on this form. Applicant may still petition for a license under 37 CFR 5.12, if a license is desired before the expiration of 6 months from the filing date of the application. If 6 months has lapsed from the filing date of this application and the licensee has not received any indication of a secrecy order under 35 U.S.C. 181, the licensee may foreign file the application pursuant to 37 CFR 5.15(b).

UNITED STATES PATENT AND TRADEMARK OFFICE

Commissioner for Patents
United States Patent and Trademark Office
P.O. Box 1450
Alexandria, VA 22313-1450
www.uspto.gov

COPY MAILED

SEP 28 2007

OFFICE OF PETITIONS

VAN DYKE, GARDNER, LINN & BURKHART, LLP
SUITE 207
2851 CHARLEVOIX DRIVE, S.E.
GRAND RAPIDS MI 49546

In re Application of	:
David E. Rhodea	:
Application No. 60/849,164	: DECISION GRANTING PETITION
Filed: October 3, 2006	:
Attorney Docket No. DEMO4 P-119	:

This is a decision on the petition, filed July 27, 2007 and supplemented on September 26, 2007, requesting that the above-identified application be accorded a later filing date of October 3, 2006, rather than the presently accorded date of October 2. The petition is properly treated as a petition under 37 CFR 1.10(c).

Petitioner alleges that the application was deposited in Express Mail Service on October 3, 2006. In support, the petition was supplemented on September 26, 2007 with a copy of Express Mail receipt No. EV394560061US (the same Express Mail number found on the original application papers located in the official file) showing a slightly illegible date, but enough so as to distinguish that the "date-in" is actually October 3, 2006.

To further substantiate petitioner's assertion that the package in question was deposited with the USPS as Express Mail on October 3, 2006, an independent search was made of the USPS Express Mail Track and Confirm records, which resulted in a finding that the package in question was in fact accepted on October 3, 2006 at the Grand Rapids, Michigan USPS at 5:35 pm. Therefore, in view of all the evidence, it is concluded that the application was deposited in Express Mail service on October 3, 2006. Accordingly, the instant application is entitled to a filing date of October 3, 2006, and has been so accorded.

In view of the above, the petition is **GRANTED**.

This application file is being referred to the Office of Initial Patent Examination (OIPE) for correction of the filing date to **October 3, 2006** and for issuance of a corrected filing receipt.

Telephone inquiries relating to this decision should be directed the undersigned at (571) 272-3218. Telephone inquiries related to OIPE processing should be directed to their hotline at (571) 272-4000.

Frances Hicks

Frances Hicks
Petitions Examiner
Office of Petitions

UNITED STATES PATENT AND TRADEMARK OFFICE

UNITED STATES DEPARTMENT OF COMMERCE
United States Patent and Trademark Office
Address: COMMISSIONER FOR PATENTS
P.O. Box 1450
Alexandria, Virginia 22313-1450
www.uspto.gov

APPL NO.	FILING OR 371 (c) DATE	ART UNIT	FIL FEE REC'D	ATTY.DOCKET NO	DRAWINGS	TOT CLMS	IND CLMS
60/849,525	10/03/2006		200	003C.0053.P1(US)	10		

CONFIRMATION NO. 6664

CORRECTED FILING RECEIPT

OC000000021144944

29683
HARRINGTON & SMITH, LLP
4 RESEARCH DRIVE
SHELTON, CT 06484-6212

Date Mailed: 11/07/2006

Receipt is acknowledged of this provisional Patent Application. It will not be examined for patentability and will become abandoned not later than twelve months after its filing date. Be sure to provide the U.S. APPLICATION NUMBER, FILING DATE, NAME OF APPLICANT, and TITLE OF INVENTION when inquiring about this application. Fees transmitted by check or draft are subject to collection. Please verify the accuracy of the data presented on this receipt. **If an error is noted on this Filing Receipt, please mail to the Commissioner for Patents P.O. Box 1450 Alexandria Va 22313-1450. Please provide a copy of this Filing Receipt with the changes noted thereon. If you received a "Notice to File Missing Parts" for this application, please submit any corrections to this Filing Receipt with your reply to the Notice. When the USPTO processes the reply to the Notice, the USPTO will generate another Filing Receipt incorporating the requested corrections (if appropriate).**

Applicant(s)

Adam P. Tyler, Rochester Hills, MI;

Power of Attorney:

Mark Harrington--31686

If Required, Foreign Filing License Granted: 10/23/2006

The country code and number of your priority application, to be used for filing abroad under the Paris Convention, is US60/849,525

Projected Publication Date: None, application is not eligible for pre-grant publication

Non-Publication Request: Not applicable

Early-Publication Request: Not applicable

Title

Electrical terminal with layered springs

PROTECTING YOUR INVENTION OUTSIDE THE UNITED STATES

Since the rights granted by a U.S. patent extend only throughout the territory of the United States and have no effect in a foreign country, an inventor who wishes patent protection in another country must apply for a patent in a specific country or in regional patent offices. Applicants may wish to consider the filing of an international application under the Patent Cooperation Treaty (PCT). An international (PCT) application generally has the same effect as a regular national patent application in each PCT-member country. The PCT process **simplifies** the filing of patent applications on the same invention in member countries, but **does not result** in a grant of "an international patent" and does not eliminate the need of applicants to file additional documents and fees in countries where patent protection is desired.

Almost every country has its own patent law, and a person desiring a patent in a particular country must make an application for patent in that country in accordance with its particular laws. Since the laws of many countries differ in various respects from the patent law of the United States, applicants are advised to seek guidance from specific foreign countries to ensure that patent rights are not lost prematurely.

Applicants also are advised that in the case of inventions made in the United States, the Director of the USPTO must issue a license before applicants can apply for a patent in a foreign country. The filing of a U.S. patent application serves as a request for a foreign filing license. The application's filing receipt contains further information and guidance as to the status of applicant's license for foreign filing.

Applicants may wish to consult the USPTO booklet, "General Information Concerning Patents" (specifically, the section entitled "Treaties and Foreign Patents") for more information on timeframes and deadlines for filing foreign patent applications. The guide is available either by contacting the USPTO Contact Center at 800-786-9199, or it can be viewed on the USPTO website at http://www.uspto.gov/web/offices/pac/doc/general/index.html.

For information on preventing theft of your intellectual property (patents, trademarks and copyrights), you may wish to consult the U.S. Government website, http://www.stopfakes.gov. Part of a Department of Commerce initiative, this website includes self-help "toolkits" giving innovators guidance on how to protect intellectual property in specific countries such as China, Korea and Mexico. For questions regarding patent enforcement issues, applicants may call the U.S. Government hotline at 1-866-999-HALT (1-866-999-4158).

LICENSE FOR FOREIGN FILING UNDER
Title 35, United States Code, Section 184
Title 37, Code of Federal Regulations, 5.11 & 5.15

GRANTED

The applicant has been granted a license under 35 U.S.C. 184, if the phrase "IF REQUIRED, FOREIGN FILING LICENSE GRANTED" followed by a date appears on this form. Such licenses are issued in all applications where the conditions for issuance of a license have been met, regardless of whether or not a license may be required as set forth in 37 CFR 5.15. The scope and limitations of this license are set forth in 37 CFR 5.15(a) unless an earlier license has been issued under 37 CFR 5.15(b). The license is subject to revocation upon written notification. The date indicated is the effective date of the license, unless an earlier license of similar scope has been granted under 37 CFR 5.13 or 5.14.

This license is to be retained by the licensee and may be used at any time on or after the effective date thereof unless it is revoked. This license is automatically transferred to any related applications(s) filed under 37 CFR 1.53(d). This license is not retroactive.

The grant of a license does not in any way lessen the responsibility of a licensee for the security of the subject matter as imposed by any Government contract or the provisions of existing laws relating to espionage and the national security or the export of technical data. Licensees should apprise themselves of current regulations especially with respect to certain countries, of other agencies, particularly the Office of Defense Trade Controls, Department of State (with respect to Arms, Munitions and Implements of War (22 CFR 121-128)); the Bureau of Industry and Security, Department of Commerce (15 CFR parts 730-774); the Office of Foreign Assets Control, Department of Treasury (31 CFR Parts 500+) and the Department of Energy.

NOT GRANTED

No license under 35 U.S.C. 184 has been granted at this time, if the phrase "IF REQUIRED, FOREIGN FILING LICENSE GRANTED" DOES NOT appear on this form. Applicant may still petition for a license under 37 CFR 5.12, if a license is desired before the expiration of 6 months from the filing date of the application. If 6 months has lapsed from the filing date of this application and the licensee has not received any indication of a secrecy order under 35 U.S.C. 181, the licensee may foreign file the application pursuant to 37 CFR 5.15(b).

UNITED STATES PATENT AND TRADEMARK OFFICE

UNITED STATES DEPARTMENT OF COMMERCE
United States Patent and Trademark Office
Address: COMMISSIONER FOR PATENTS
P.O. Box 1450
Alexandria, Virginia 22313-1450
www.uspto.gov

APPL NO.	FILING OR 371 (c) DATE	ART UNIT	FIL FEE REC'D	ATTY.DOCKET NO	DRAWINGS	TOT CLMS	IND CLMS
60/849,978	10/06/2006		100	5834.079			

CONFIRMATION NO. 8692

CORRECTED FILING RECEIPT

OC000000021329883

30589
DUNLAP, CODDING & ROGERS P.C.
PO BOX 16370
OKLAHOMA CITY, OK 73113

Date Mailed: 11/22/2006

Receipt is acknowledged of this provisional Patent Application. It will not be examined for patentability and will become abandoned not later than twelve months after its filing date. Be sure to provide the U.S. APPLICATION NUMBER, FILING DATE, NAME OF APPLICANT, and TITLE OF INVENTION when inquiring about this application. Fees transmitted by check or draft are subject to collection. Please verify the accuracy of the data presented on this receipt. **If an error is noted on this Filing Receipt, please mail to the Commissioner for Patents P.O. Box 1450 Alexandria Va 22313-1450. Please provide a copy of this Filing Receipt with the changes noted thereon. If you received a "Notice to File Missing Parts" for this application, please submit any corrections to this Filing Receipt with your reply to the Notice. When the USPTO processes the reply to the Notice, the USPTO will generate another Filing Receipt incorporating the requested corrections (if appropriate).**

Applicant(s)

Ted Bader, Yukon, OK;

Power of Attorney:

Christopher Corbett--36109

If Required, Foreign Filing License Granted: 10/31/2006

The country code and number of your priority application, to be used for filing abroad under the Paris Convention, is US60/849,978

Projected Publication Date: None, application is not eligible for pre-grant publication

Non-Publication Request: Not applicable

Early-Publication Request: Not applicable

**** SMALL ENTITY ****

Title

Statin treatments for viral diseases

PROTECTING YOUR INVENTION OUTSIDE THE UNITED STATES

Since the rights granted by a U.S. patent extend only throughout the territory of the United States and have no effect in a foreign country, an inventor who wishes patent protection in another country must apply for a patent in a specific country or in regional patent offices. Applicants may wish to consider the filing of an international application under the Patent Cooperation Treaty (PCT). An international (PCT) application generally has the same effect as a regular national patent application in each PCT-member country. The PCT process **simplifies** the filing of patent applications on the same invention in member countries, but **does not result** in a grant of "an international patent" and does not eliminate the need of applicants to file additional documents and fees in countries where patent protection is desired.

Almost every country has its own patent law, and a person desiring a patent in a particular country must make an application for patent in that country in accordance with its particular laws. Since the laws of many countries differ in various respects from the patent law of the United States, applicants are advised to seek guidance from specific foreign countries to ensure that patent rights are not lost prematurely.

Applicants also are advised that in the case of inventions made in the United States, the Director of the USPTO must issue a license before applicants can apply for a patent in a foreign country. The filing of a U.S. patent application serves as a request for a foreign filing license. The application's filing receipt contains further information and guidance as to the status of applicant's license for foreign filing.

Applicants may wish to consult the USPTO booklet, "General Information Concerning Patents" (specifically, the section entitled "Treaties and Foreign Patents") for more information on timeframes and deadlines for filing foreign patent applications. The guide is available either by contacting the USPTO Contact Center at 800-786-9199, or it can be viewed on the USPTO website at http://www.uspto.gov/web/offices/pac/doc/general/index.html.

For information on preventing theft of your intellectual property (patents, trademarks and copyrights), you may wish to consult the U.S. Government website, http://www.stopfakes.gov. Part of a Department of Commerce initiative, this website includes self-help "toolkits" giving innovators guidance on how to protect intellectual property in specific countries such as China, Korea and Mexico. For questions regarding patent enforcement issues, applicants may call the U.S. Government hotline at 1-866-999-HALT (1-866-999-4158).

LICENSE FOR FOREIGN FILING UNDER
Title 35, United States Code, Section 184
Title 37, Code of Federal Regulations, 5.11 & 5.15

GRANTED

The applicant has been granted a license under 35 U.S.C. 184, if the phrase "IF REQUIRED, FOREIGN FILING LICENSE GRANTED" followed by a date appears on this form. Such licenses are issued in all applications where the conditions for issuance of a license have been met, regardless of whether or not a license may be required as set forth in 37 CFR 5.15. The scope and limitations of this license are set forth in 37 CFR 5.15(a) unless an earlier license has been issued under 37 CFR 5.15(b). The license is subject to revocation upon written notification. The date indicated is the effective date of the license, unless an earlier license of similar scope has been granted under 37 CFR 5.13 or 5.14.

This license is to be retained by the licensee and may be used at any time on or after the effective date thereof unless it is revoked. This license is automatically transferred to any related applications(s) filed under 37 CFR 1.53(d). This license is not retroactive.

The grant of a license does not in any way lessen the responsibility of a licensee for the security of the subject matter as imposed by any Government contract or the provisions of existing laws relating to espionage and the national security or the export of technical data. Licensees should apprise themselves of current regulations especially with respect to certain countries, of other agencies, particularly the Office of Defense Trade Controls, Department of State (with respect to Arms, Munitions and Implements of War (22 CFR 121-128)); the Bureau of

Industry and Security, Department of Commerce (15 CFR parts 730-774); the Office of Foreign Assets Control, Department of Treasury (31 CFR Parts 500+) and the Department of Energy.

NOT GRANTED

No license under 35 U.S.C. 184 has been granted at this time, if the phrase "IF REQUIRED, FOREIGN FILING LICENSE GRANTED" DOES NOT appear on this form. Applicant may still petition for a license under 37 CFR 5.12, if a license is desired before the expiration of 6 months from the filing date of the application. If 6 months has lapsed from the filing date of this application and the licensee has not received any indication of a secrecy order under 35 U.S.C. 181, the licensee may foreign file the application pursuant to 37 CFR 5.15(b).

UNITED STATES PATENT AND TRADEMARK OFFICE

Commissioner for Patents
United States Patent and Trademark Office
P.O. Box 1450
Alexandria, VA 22313-1450
www.uspto.gov

PATRICK R. SCANLON
PRETI FLAHERTY BELIVEAU & PACHIOS LLP
ONE CITY CENTER
PORTLAND ME 04112-9546

COPY MAILED

MAR 08 2007

OFFICE OF PETITIONS

In re Application of	:	
McLoughlin et al.	:	
Application No. 60/850,432	:	ON PETITION
Filed: October 10, 2006	:	
Attorney Docket No. 34013US01	:	

This is a decision on the petition filed November 8, 2006, requesting that the above-identified application be accorded a filing date of October 10, 2006, rather than the presently accorded date of October 11, 2006. The petition is properly treated as a petition under 37 CFR 1.10(d).

Applicant requests the earlier filing date on the basis that the application was purportedly deposited with the U. S. Postal Service (USPS) as Express Mail on October 10, 2006, pursuant to 37 CFR 1.10. In support, applicant has submitted a copy of a postal service sales receipt, which shows Express Mail label No. EV 833334737 US, as having a receipt date of October 10, 2006. The same Express Mail receipt number appears on the original "Provisional Application for Patent Cover Sheet."

To further substantiate applicant's allegation that the application papers for this file were deposited on the requested filing date, an independent search was made of the USPS Express Mail Track and Confirm records which resulted in a finding that the package in question was in fact accepted on October 10, 2006, at 5:23 p.m. at the Portland, ME USPS.

Applicant states, "A copy of the "Express Mail" label showing the incorrect "date in" as well as the "Express Mail" label number of EV 833334737 US is enclosed." After a review of the application file, it appears the label has not included. However, in view of all the evidence listed above, it is concluded that the application was deposited in Express Mail service on October 10, 2006. Accordingly, the instant application is entitled to a filing date of October 10, 2006 and has been so accorded.

The petition is **GRANTED**.

A petition under 37 CFR 1.10(d) does not require a petition fee and none has been charged.

This matter is being referred to the Office of Initial Patent Examination Division for further **processing with a filing date of October 10, 2006, along with a corrected filing receipt.**

Telephone inquiries concerning this matter may be directed Petitions Examiner Liana Chase at (571) 272-3206.

Frances Hicks
Petitions Examiner
Office of Petitions

UNITED STATES PATENT AND TRADEMARK OFFICE

Commissioner for Patents
United States Patent and Trademark Office
P.O. Box 1450
Alexandria, VA 22313-1450
www.uspto.gov
DIW Mar-08

WOOD, PHILLIPS, KATZ, CLARK & MORTIMER
500 W. MADISON STREET
SUITE 3800
CHICAGO IL 60661

COPY MAILED

MAR 19 2008

OFFICE OF PETITIONS

In re Application of	:	
Vrame et al.	:	
Application Number: 60/850618	:	DECISION DISMISSING PETITION
Filing Date: 10/10/2006	:	
Attorney Docket Number:	:	
SPP04487P00200US	:	

This is a decision in reference to the "REQUEST FOR CORRECTION OF PROVISIONAL APPLICATION FILING DATE," filed on January 22, 2008, which is treated as a petition filed under 37 CFR 1.10(c), requesting that the above-identified application be accorded a filing date of October 9, 2006, rather than the currently-accorded filing date of October 10, 2006.

The petition is **DISMISSED**.

Any request for reconsideration of this decision should be filed within **TWO MONTHS** of the date of this decision in order to be considered timely (see 37 CFR 1.181(f)). No extensions of time pursuant to the provisions of 37 CFR 1.136 are permitted.

Petitioners allege that the application was deposited in "Express Mail Post Office to Addressee" service on October 9, 2006. In support, on January 22, 2008, petitioners supplied a copy of "Express Mail" Customer Label No. EV843642349US.

37 CFR 1.10(c) states:

> Any person filing correspondence under this section that was received by the Office and delivered by the "Express Mail Post Office to Addressee" service of the USPS, who can show that there is a discrepancy between the filing date accorded by the Office to the correspondence and the date of deposit as shown by the "date-in" on the "Express Mail" mailing label or other official USPS notation, may petition the Director to accord the correspondence a filing date as of the "date-in" on the "Express Mail" mailing label or other official USPS notation, provided that:

(1) The petition is filed promptly after the person becomes aware that the Office has accorded, or will accord, a filing date other than the USPS deposit date;

(2) The number of the "Express Mail" mailing label was placed on the paper(s) or fee(s) that constitute the correspondence prior to the original mailing by "Express Mail;" and

(3) The petition includes a true copy of the "Express Mail" mailing label showing the "date-in," and of any other official notation by the USPS relied upon to show the date of deposit.

The petition lacks item (2)

In regards to item (2), a search of the official file reveals that petitioner failed to place the Express Mail label number on the originally filed specification and claims, drawings, and transmittal sheet. Any renewed petition should identify where the Express Mail label number can be found in the originally-filed application papers.

The placement of the Express Mail label number on a paper ties the paper to a single, identifiable Express Mail receipt. Where questions are later raised concerning the filing date of the paper, the USPTO may require the applicant to supply a copy of the Express Mail receipt identified on the paper in order to verify the mailing date. Where no Express Mail label number is identified on a paper, the USPTO has no way of independently associating the paper with any particular Express Mail receipt.

The difficulty caused by an applicant's failure to place an Express Mail label number on a paper is clearly illustrated by this case. Since no Express Mail label number was placed on the application papers prior to mailing, the USPTO has nothing in its control from the filing date of the papers to independently corroborate the applicants' assertion that the application was filed on October 9, 2006.

Further correspondence with respect to this matter should be addressed as follows:

By mail: Mail Stop Petition
Commissioner for Patents
P.O. Box 1450
Alexandria, VA 22313-1450

By FAX: (571)273-8300
Attn: Office of Petitions

By hand: Customer Service Window
Randolph Building
401 Dulany Street
Alexandria, VA 22314

Telephone inquiries related to this decision should be directed to the undersigned at 571-272-3231.

D Wood

Douglas I. Wood
Senior Petitions Attorney
Office of Petitions

UNITED STATES PATENT AND TRADEMARK OFFICE

Commissioner for Patents
United States Patent and Trademark Office
P.O. Box 1450
Alexandria, VA 22313-1450
www.uspto.gov

JJGJR.: 04-07

Paper No: __

INTELLECTUAL PROPERTY DEPT.
DEWITT ROSS & STEVENS, S.C.
US BANK BUILDING
8000 EXCELSIOR DRIVE, SUITE 401
MADISON WI 53717-1914

COPY MAILED

APR 2 3 2007

OFFICE OF PETITIONS

In re Application of	:	
Herr	:	
Application No. 60/850,646	:	ON PETITION
Deposited/Filed: 9 October, 2006	:	
Attorney Docket No. 41681.004	:	

This is a decision on the petition filed on 4 December, 2006, considered under 37 C.F.R. §1.53.

The petition under 37 C.F.R. §1.53 is **GRANTED in part** and **DISMISSED in part**.

BACKGROUND

The record indicates:

- the instant application was deposited on 9 October, 2006;
- on 27 October, 2006, the Office of Initial Patent Examination (OIPE) mailed a Notice of Incomplete Application (the Notice) stating that the application had not been accorded a filing date because it had been deposited without drawings as required under 35 U.S.C. 113 (first sentence);
- OIPE indicated that Petitioner might:

  –contend via petition that the drawings were submitted, or that they were not necessary for a filing date; or

–file a new application (provisional applications may not be amended) and accept the date of submission as the filing date.

- OIPE set a two- (2-) month period for reply;
- Petitioner, in fact, elected none of the options set forth by OIPE;
- on 4 December, 2006, Petitioner filed the instant petition (over a certificate of mailing), and the instant petition seeks a filing date of 9 October, 2006, with the drawings, alleging that:

  –while Figs. 1, 2 and 3, *per se*, in fact were not included with the application on deposit, they were present in part in Attachment 3 page 5 (Figure 1) and page 4 (Figure 2);

  –Figure 3 Petitioner seeks to submit to add to/amend the provisional application, though retain the original date of deposit as the filing date; and

  –while the three items Figs. 1, 2 and 3 were not included with the application on deposit, "drawings are not necessary to the full disclosure" for an understanding of the invention.

It is noted that a review of the instant application reveals that at the first paragraph of the application, at the "Field of the Invention," it states an averment that "the present invention is directed to a process" and, thus, the application is viewed to contain at least one process/method claim.

Again it is noted that Petitioner attempts to amend a provisional application in the face of the explicit bar thereto (see: 37 C.F.R. §1.53(c) and MPEP §506.).

ANALYSIS

Petitioner provides no date-stamped receipt card (see: MPEP §503[1]) in evidence of Office receipt

---

[1] MPEP §503 provides in pertinent part:
§503 Application Number and Filing Receipt

* * *

A return postcard should be attached to *each* patent application for which a receipt is desired. It is important that the return postcard itemize all of the components of the application. If the postcard does not itemize each of the components of the application, it will not serve as evidence that any component which was not itemized was received by the United States Patent and Trademark Office (USPTO). It should be recognized that the identification of an application by application number does not necessarily signify that the USPTO has accepted the application as complete (37 C.F.R. §1.53(a)).

* * *

of drawings on deposit, and, in fact, Petitioner acknowledges that he failed to submit the drawings in question on deposit.

However, as indicated above, Petitioner has alleged, *inter alia*, that the instant application does not require drawings for the understanding of the subject matter to be patented, and a review of the application indicates that, among the claims therein are contained one or more method claims. (See: MPEP §601.01(f)(A).)

It is the practice of the Office to treat an application that contains at least one process or method claim as an application for which a drawing is not necessary for the understanding of the invention under 35 U.S.C. §113 (first sentence). (See: MPEP §601.01[2])

RETURN POSTCARD

If a receipt of any item (e.g., paper or fee) filed in the USPTO is desired, it may be obtained by enclosing with the paper a self-addressed postcard specifically identifying the item. The USPTO will stamp the receipt date on the postcard and place it in the outgoing mail. A postcard receipt which itemizes and properly identifies the items which are being filed serves as *prima facie* evidence of receipt in the USPTO of all the items listed thereon on the date stamped thereon by the USPTO.

The identifying data on the postcard should be so complete as to clearly identify the item for which receipt is requested. For example, the postcard should identify the applicant's name, application number (if known), confirmation number (if known), filing date, interference number, title of the invention, etc. The postcard should also identify the type of paper being filed, e.g., new application, affidavit, amendment, notice of appeal, appeal brief, drawings, fees, motions, supplemental oath or declaration, petition, etc., and the number of pages being submitted. If a new application is being filed, all parts of the application being submitted should be separately listed on the postcard, e.g., the number of pages of specification (including written description, claims and abstract), number of claims, number of sheets of drawings, number of pages of oath/declaration, number of pages of cover sheet (provisional application).

The postcard receipt will not serve as *prima facie* evidence of receipt of any item which is not adequately itemized on the postcard. For example, merely listing on the postcard "a complete application" or "patent application" will not serve as a proper receipt for each of the required components of an application (e.g., specification (including claims), drawings (if necessary), oath or declaration and the application filing fee) or missing portions (e.g., pages, sheets of drawings) of an application if one of the components or portion of a component is found to be missing by the USPTO. Each separate component should be specifically and properly itemized on the postcard. Furthermore, merely incorporating by reference in the postcard receipt, the items listed in a transmittal letter will not serve as *prima facie* evidence of receipt of those items.

The person receiving the item(s) in the USPTO will check the listing on the postcard against the item(s) being filed to be sure they are properly identified and that all the items listed on the postcard are presently being submitted to the USPTO. If any of the items listed on the postcard are not being submitted to the USPTO, those items will be crossed off and the post-card initialed by the person receiving the items. Upon return of a postcard receipt from the USPTO, the postcard receipt should be promptly reviewed by the person who filed the items to ensure that every item specifically denoted on the postcard was received by the USPTO. If the postcard receipt has been annotated to indicate that a particular item denoted on the postcard was not received by the USPTO, the postcard receipt will not serve as *prima facie* evidence of receipt of that item in the USPTO. (Emphasis supplied.)

[2] The commentary at MPEP §601.01 provides in pertinent part:

* * *

601.01(f) Applications Filed Without Drawings

35 U.S.C. 111(a)(2)(B) and 35 U.S.C. 111(b)(1)(B) each provide, in part, that an "application shall include . . . a drawing as prescribed by section 113 of this title" and 35 U.S.C. 111(a)(4) and 35 U.S.C. 111(b)(4) each provide, in part, that the "filing date . . . shall be the date on which . . . any required drawing are received in the Patent and Trademark Office." 35 U.S.C. 113 (first sentence) in turn provides that an "applicant shall furnish a drawing where necessary for the understanding of the subject matter sought to be patented.

Applications filed without drawings are initially inspected to determine whether a drawing is referred to in the specification, and if not, whether a drawing is necessary for the understanding of the invention. 35 U.S.C. 113 (first sentence).

It has been USPTO practice to treat an application that contains at least one process or method claim as an application for which a drawing is not necessary for an understanding of the invention under 35 U.S.C. 113 (first sentence). The same practice has been followed in composition applications.

The same practice has been followed in composition applications. Other situations in which drawings are usually not considered necessary for the understanding of the invention under 35
U.S.C. 113 (first sentence) are:

(A) *Coated articles or products*: where the invention resides solely in coating or impregnating a conventional sheet (*e.g.*, paper or cloth, or an

Thus, the argument of the petition is construed, in part and for the purposes of this decision, to mean that drawings are not necessary for a filing date in this application. In the absence of entry by the Examiner of an amendment, drawings identified as Figs. 1, 2 and 3 will not be further considered as a part of this case.

In view of the above, the Notice mailed on 27 October, 2006, hereby is withdrawn to the extent that it indicates no filing date will be granted.

CONCLUSION

The petition is **granted in part**, to the extent that the application will be accorded the filing date of 9 October, 2006, without drawings identified as Figs. 1, 2 and 3 as part of the original disclosure of the application; in all other respects the petition **is dismissed**. The petition fee is waived.

Petitioner is reminded once again that the amendment of a provisional application is not allowed. Petitioner may file a new application if he wishes to do so, however, in no case will an amendment be entered to a provisional application.

The application is being referred to the Office of Initial Patent Examination to be processed for correction of the filing date to 9 October, 2006, with the 21 pages of specification (description, claims, abstract) and 76 pages of appendices/attachments deposited on 9 October, 2006, and no drawings (i.e., Figs. 1, 2 and 3) as the original disclosure.

While telephone inquiries regarding this decision may be directed to the undersigned at (571) 272-3214, it is noted that all practice before the Office is in writing (see: 37 C.F.R. §1.2[3]) and the

---

article of known and conventional character with a particu lar composition), unless significant details of structure or arrangement are involved in the article claims;

* * *

A nonprovisional application having at least one claim, or a provisional application having at least some disclosure, directed to the subject matter discussed above for which a drawing is usually not considered essential for a filing date, not describing drawing figures in the specification, and filed without drawings will simply be processed for examination, so long as the application contains something that can be construed as a written description. A nonprovisional application having at least one claim, or a provisional application having at least some disclosure, directed to the subject matter discussed above for which a drawing is usually not considered essential for a filing date, describing drawing figure(s) in the specification, but filed without drawings will be treated as an application filed without all of the drawing figures referred to in the specification as discussed in MPEP § 601.01(g), so long as the application contains something that can be construed as a written description. In a situation in which the appropriate Technology Center (TC) determines that drawings are necessary under 35 U.S.C. 113 (first sentence) the filing date issue will be reconsidered by the USPTO.

* * *

[3] The regulations at 37 C.F.R. §1.2 provide:

§1.2 Business to be transacted in writing.

All business with the Patent and Trademark Office should be transacted in writing.The personal attendance of applicants or their attorneys or agents at the Patent and Trademark Office is unnecessary. The action of the Patent and Trademark Office will be based exclusively on the

proper authority for action on any matter in this regard are the statutes (35 U.S.C.), regulations (37 C.F.R.) and the commentary on policy (MPEP). Therefore, no telephone discussion may be controlling or considered authority for Petitioner's action(s).

John J. Gillon, Jr.
Senior Attorney
Office of Petitions

written record in the Office. No attention will be paid to any alleged oral promise, stipulation,or understanding in relation to which there is disagreement or doubt.

UNITED STATES PATENT AND TRADEMARK OFFICE

UNITED STATES DEPARTMENT OF COMMERCE
United States Patent and Trademark Office
Address: COMMISSIONER FOR PATENTS
P.O. Box 1450
Alexandria, Virginia 22313-1450
www.uspto.gov

APPL NO.	FILING OR 371 (c) DATE	ART UNIT	FIL FEE REC'D	ATTY.DOCKET NO	DRAWINGS	TOT CLMS	IND CLMS
60/850,697	10/09/2006		200	10593P			

CONFIRMATION NO. 1837

CORRECTED FILING RECEIPT

OC000000021159114

27752
THE PROCTER & GAMBLE COMPANY
INTELLECTUAL PROPERTY DIVISION
WINTON HILL BUSINESS CENTER - BOX 161
6110 CENTER HILL AVENUE
CINCINNATI, OH 45224

Date Mailed: 11/08/2006

Receipt is acknowledged of this provisional Patent Application. It will not be examined for patentability and will become abandoned not later than twelve months after its filing date. Be sure to provide the U.S. APPLICATION NUMBER, FILING DATE, NAME OF APPLICANT, and TITLE OF INVENTION when inquiring about this application. Fees transmitted by check or draft are subject to collection. Please verify the accuracy of the data presented on this receipt. **If an error is noted on this Filing Receipt, please mail to the Commissioner for Patents P.O. Box 1450 Alexandria Va 22313-1450. Please provide a copy of this Filing Receipt with the changes noted thereon. If you received a "Notice to File Missing Parts" for this application, please submit any corrections to this Filing Receipt with your reply to the Notice. When the USPTO processes the reply to the Notice, the USPTO will generate another Filing Receipt incorporating the requested corrections (if appropriate).**

Applicant(s)

Mario Elmen Tremblay, West Chester, OH;
Peter Robert Foley, Cincinnati, OH;

Power of Attorney:

Julia Glazer--41783

If Required, Foreign Filing License Granted: 11/08/2006

The country code and number of your priority application, to be used for filing abroad under the Paris Convention, is US60/850,697

Projected Publication Date: None, application is not eligible for pre-grant publication

Non-Publication Request: Not applicable

Early-Publication Request: Not applicable

Title

Calcium hypochlorite for use in a laundry washing process

PROTECTING YOUR INVENTION OUTSIDE THE UNITED STATES

Since the rights granted by a U.S. patent extend only throughout the territory of the United States and have no effect in a foreign country, an inventor who wishes patent protection in another country must apply for a patent in a specific country or in regional patent offices. Applicants may wish to consider the filing of an international application under the Patent Cooperation Treaty (PCT). An international (PCT) application generally has the same effect as a regular national patent application in each PCT-member country. The PCT process **simplifies** the filing of patent applications on the same invention in member countries, but **does not result** in a grant of "an international patent" and does not eliminate the need of applicants to file additional documents and fees in countries where patent protection is desired.

Almost every country has its own patent law, and a person desiring a patent in a particular country must make an application for patent in that country in accordance with its particular laws. Since the laws of many countries differ in various respects from the patent law of the United States, applicants are advised to seek guidance from specific foreign countries to ensure that patent rights are not lost prematurely.

Applicants also are advised that in the case of inventions made in the United States, the Director of the USPTO must issue a license before applicants can apply for a patent in a foreign country. The filing of a U.S. patent application serves as a request for a foreign filing license. The application's filing receipt contains further information and guidance as to the status of applicant's license for foreign filing.

Applicants may wish to consult the USPTO booklet, "General Information Concerning Patents" (specifically, the section entitled "Treaties and Foreign Patents") for more information on timeframes and deadlines for filing foreign patent applications. The guide is available either by contacting the USPTO Contact Center at 800-786-9199, or it can be viewed on the USPTO website at http://www.uspto.gov/web/offices/pac/doc/general/index.html.

For information on preventing theft of your intellectual property (patents, trademarks and copyrights), you may wish to consult the U.S. Government website, http://www.stopfakes.gov. Part of a Department of Commerce initiative, this website includes self-help "toolkits" giving innovators guidance on how to protect intellectual property in specific countries such as China, Korea and Mexico. For questions regarding patent enforcement issues, applicants may call the U.S. Government hotline at 1-866-999-HALT (1-866-999-4158).

LICENSE FOR FOREIGN FILING UNDER
Title 35, United States Code, Section 184
Title 37, Code of Federal Regulations, 5.11 & 5.15

GRANTED

The applicant has been granted a license under 35 U.S.C. 184, if the phrase "IF REQUIRED, FOREIGN FILING LICENSE GRANTED" followed by a date appears on this form. Such licenses are issued in all applications where the conditions for issuance of a license have been met, regardless of whether or not a license may be required as set forth in 37 CFR 5.15. The scope and limitations of this license are set forth in 37 CFR 5.15(a) unless an earlier license has been issued under 37 CFR 5.15(b). The license is subject to revocation upon written notification. The date indicated is the effective date of the license, unless an earlier license of similar scope has been granted under 37 CFR 5.13 or 5.14.

This license is to be retained by the licensee and may be used at any time on or after the effective date thereof unless it is revoked. This license is automatically transferred to any related applications(s) filed under 37 CFR 1.53(d). This license is not retroactive.

The grant of a license does not in any way lessen the responsibility of a licensee for the security of the subject matter as imposed by any Government contract or the provisions of existing laws relating to espionage and the national security or the export of technical data. Licensees should apprise themselves of current regulations

especially with respect to certain countries, of other agencies, particularly the Office of Defense Trade Controls, Department of State (with respect to Arms, Munitions and Implements of War (22 CFR 121-128)); the Bureau of Industry and Security, Department of Commerce (15 CFR parts 730-774); the Office of Foreign Assets Control, Department of Treasury (31 CFR Parts 500+) and the Department of Energy.

NOT GRANTED

No license under 35 U.S.C. 184 has been granted at this time, if the phrase "IF REQUIRED, FOREIGN FILING LICENSE GRANTED" DOES NOT appear on this form. Applicant may still petition for a license under 37 CFR 5.12, if a license is desired before the expiration of 6 months from the filing date of the application. If 6 months has lapsed from the filing date of this application and the licensee has not received any indication of a secrecy order under 35 U.S.C. 181, the licensee may foreign file the application pursuant to 37 CFR 5.15(b).

UNITED STATES PATENT AND TRADEMARK OFFICE

UNITED STATES DEPARTMENT OF COMMERCE
United States Patent and Trademark Office
Address: COMMISSIONER FOR PATENTS
P.O. Box 1450
Alexandria, Virginia 22313-1450
www.uspto.gov

APPL NO.	FILING OR 371 (c) DATE	ART UNIT	FIL FEE REC'D	ATTY.DOCKET NO	DRAWINGS	TOT CLMS	IND CLMS
60/850,955	10/10/2006		725	2001543.00121US1	1		

CONFIRMATION NO. 3303

23483
WILMER CUTLER PICKERING HALE AND DORR LLP
60 STATE STREET
BOSTON, MA 02109

CORRECTED FILING RECEIPT

OC000000021559379

Date Mailed: 12/11/2006

Receipt is acknowledged of this provisional Patent Application. It will not be examined for patentability and will become abandoned not later than twelve months after its filing date. Be sure to provide the U.S. APPLICATION NUMBER, FILING DATE, NAME OF APPLICANT, and TITLE OF INVENTION when inquiring about this application. Fees transmitted by check or draft are subject to collection. Please verify the accuracy of the data presented on this receipt. **If an error is noted on this Filing Receipt, please mail to the Commissioner for Patents P.O. Box 1450 Alexandria Va 22313-1450. Please provide a copy of this Filing Receipt with the changes noted thereon. If you received a "Notice to File Missing Parts" for this application, please submit any corrections to this Filing Receipt with your reply to the Notice. When the USPTO processes the reply to the Notice, the USPTO will generate another Filing Receipt incorporating the requested corrections (if appropriate).**

Applicant(s)

Winston Elibox, Castries, SAINT LUCIA;
Pathmanathan Umaharan, Maracas, TRINIDAD AND TOBAGO;

Power of Attorney: The patent practitioners associated with Customer Number **23483**.

Projected Publication Date: None, application is not eligible for pre-grant publication

Non-Publication Request: Not applicable

Early-Publication Request: Not applicable

**** SMALL ENTITY ****

Title

Screening for resistance to Xanthomonas campestris pv.dieffenbachiae in anthurium

PROTECTING YOUR INVENTION OUTSIDE THE UNITED STATES

Since the rights granted by a U.S. patent extend only throughout the territory of the United States and have no effect in a foreign country, an inventor who wishes patent protection in another country must apply for a patent in

a specific country or in regional patent offices. Applicants may wish to consider the filing of an international application under the Patent Cooperation Treaty (PCT). An international (PCT) application generally has the same effect as a regular national patent application in each PCT-member country. The PCT process **simplifies** the filing of patent applications on the same invention in member countries, but **does not result** in a grant of "an international patent" and does not eliminate the need of applicants to file additional documents and fees in countries where patent protection is desired.

Almost every country has its own patent law, and a person desiring a patent in a particular country must make an application for patent in that country in accordance with its particular laws. Since the laws of many countries differ in various respects from the patent law of the United States, applicants are advised to seek guidance from specific foreign countries to ensure that patent rights are not lost prematurely.

Applicants also are advised that in the case of inventions made in the United States, the Director of the USPTO must issue a license before applicants can apply for a patent in a foreign country. The filing of a U.S. patent application serves as a request for a foreign filing license. The application's filing receipt contains further information and guidance as to the status of applicant's license for foreign filing.

Applicants may wish to consult the USPTO booklet, "General Information Concerning Patents" (specifically, the section entitled "Treaties and Foreign Patents") for more information on timeframes and deadlines for filing foreign patent applications. The guide is available either by contacting the USPTO Contact Center at 800-786-9199, or it can be viewed on the USPTO website at http://www.uspto.gov/web/offices/pac/doc/general/index.html.

For information on preventing theft of your intellectual property (patents, trademarks and copyrights), you may wish to consult the U.S. Government website, http://www.stopfakes.gov. Part of a Department of Commerce initiative, this website includes self-help "toolkits" giving innovators guidance on how to protect intellectual property in specific countries such as China, Korea and Mexico. For questions regarding patent enforcement issues, applicants may call the U.S. Government hotline at 1-866-999-HALT (1-866-999-4158).

LICENSE FOR FOREIGN FILING UNDER
Title 35, United States Code, Section 184
Title 37, Code of Federal Regulations, 5.11 & 5.15

GRANTED

The applicant has been granted a license under 35 U.S.C. 184, if the phrase "IF REQUIRED, FOREIGN FILING LICENSE GRANTED" followed by a date appears on this form. Such licenses are issued in all applications where the conditions for issuance of a license have been met, regardless of whether or not a license may be required as set forth in 37 CFR 5.15. The scope and limitations of this license are set forth in 37 CFR 5.15(a) unless an earlier license has been issued under 37 CFR 5.15(b). The license is subject to revocation upon written notification. The date indicated is the effective date of the license, unless an earlier license of similar scope has been granted under 37 CFR 5.13 or 5.14.

This license is to be retained by the licensee and may be used at any time on or after the effective date thereof unless it is revoked. This license is automatically transferred to any related applications(s) filed under 37 CFR 1.53(d). This license is not retroactive.

The grant of a license does not in any way lessen the responsibility of a licensee for the security of the subject matter as imposed by any Government contract or the provisions of existing laws relating to espionage and the national security or the export of technical data. Licensees should apprise themselves of current regulations especially with respect to certain countries, of other agencies, particularly the Office of Defense Trade Controls, Department of State (with respect to Arms, Munitions and Implements of War (22 CFR 121-128)); the Bureau of Industry and Security, Department of Commerce (15 CFR parts 730-774); the Office of Foreign Assets Control, Department of Treasury (31 CFR Parts 500+) and the Department of Energy.

NOT GRANTED

No license under 35 U.S.C. 184 has been granted at this time, if the phrase "IF REQUIRED, FOREIGN FILING LICENSE GRANTED" DOES NOT appear on this form. Applicant may still petition for a license under 37 CFR 5.12, if a license is desired before the expiration of 6 months from the filing date of the application. If 6 months has lapsed from the filing date of this application and the licensee has not received any indication of a secrecy order under 35 U.S.C. 181, the licensee may foreign file the application pursuant to 37 CFR 5.15(b).

UNITED STATES PATENT AND TRADEMARK OFFICE

Commissioner for Patents
United States Patent and Trademark Office
P.O. Box 1450
Alexandria, VA22313-1450
www.uspto.gov

PATRICK J. HALLORAN, PH.D., J.D.
3141 MUIRFIELD ROAD
CENTER VALLEY PA 18034

COPY MAILED

SEP 13 2007

OFFICE OF PETITIONS

In re Application of
Frank Matthews et al.
Application No. 60/851,099
Filed: October 11, 2006
Attorney Docket No. AL-06-02-PR

: DECISION ON PETITION

This is a decision on the response filed May 21, 2007, which is treated as a petition under 37 CFR 1.53, requesting that the above-identified provisional application be accorded a filing date of October 11, 2006.

The petition under 37 CFR 1.53(e) is **DISMISSED**.

The application was filed on October 11, 2006, without drawings. Accordingly, on March 29, 2007, the Office of Initial Patent Examination mailed a "Notice of Incomplete Provisional Application" stating that the application had been deposited without drawings.

The present petition argues that drawings are not necessary for an understanding of the subject matter sought to be patented, and requests that the application be accorded a filing date of October 11, 2006.

The available balance on the credit card given for charging the petition fee was not sufficient to charge the entire amount due and since no authorizations for debiting a deposit account for any deficiencies have been granted, the required fees have not been paid.

In view thereof, the petition fee must be remitted before a petition on the merits can be addressed and granted.

Further correspondence with respect to this matter should be addressed as follows:

By mail: Mail Stop Petitions
Commissioner for Patents
P.O. Box 1450
Alexandria VA 22313-1450

By FAX: (571) 273-8300

Telephone inquiries concerning this matter may be directed to the undersigned Petitions Attorney at (571) 272-3212.

Patricia Faison-Ball

Patricia Faison-Ball
Senior Petitions Attorney
Office of Petitions

UNITED STATES PATENT AND TRADEMARK OFFICE

Commissioner for Patents
United States Patent and Trademark Office
P.O. Box 1450
Alexandria, VA22313-1450
www.uspto.gov

PATRICK J. HALLORAN, PH.D., J.D.
3141 MUIRFIELD ROAD
CENTER VALLEY PA 18034

COPY MAILED

SEP 26 2007

OFFICE OF PETITIONS

In re Application of Frank Matthews et al. Application No. 60/851,099 Filed: October 11, 2006 Attorney Docket No. AL-06-02-PR	DECISION GRANTING PETITION

This is a decision on the renewed petition filed September 17, 2007, which is treated as a petition under 37 CFR 1.53, requesting that the above-identified provisional application be accorded a filing date of October 11, 2006.

The petition under 37 CFR 1.53(e) is **GRANTED**.

The application was filed on October 11, 2006, without drawings. Accordingly, on March 29, 2007, the Office of Initial Patent Examination mailed a "Notice of Incomplete Provisional Application" stating that the application had been deposited without drawings. A petition filed May 21, 2007 was dismissed in a decision mailed September 13, 2007 for failure to submit sufficient petition fees.

The present petition argues that drawings are not necessary for an understanding of the subject matter sought to be patented, and requests that the application be accorded a filing date of October 11, 2006.

Based on petitioners argument, this application will be accorded a filing date of October 11, 2006. Petitioner is advised, however, that this decision does not constitute a determination in accordance with 35 U.S.C. § 113 (first sentence). However, the "Notice" was correct in stating that the application appeared to have been incomplete. Thus, the petition fee in the amount of $400.00 has been charged to petitioner's credit card.

The application will be processed for filing date purposes using the application papers present on October 11, 2006.

Petitioner is reminded that no amendment/corrections, other than to make the provisional application comply with the patent statute and all applicable regulations, may be made to a provisional application after the filing date of the provisional application. See 37 CFR 1.53(c); 37 CFR 1.121(j). As such, if petitioners desire to have drawings submitted, petitioners should simply file a new completed provisional application.

This matter is being referred to the Office of Initial Patent Examination for processing with a filing date of October 11, 2006, using the application papers filed on that date, and for an indication on the bib-data sheet that no (0) sheets of drawings were present on filing.

Telephone inquiries regarding this decision should be directed to the undersigned Petitions Attorney at (571) 272-3212.

Patricia Faison-Ball

Patricia Faison-Ball
Senior Petitions Attorney
Office of Petitions

UNITED STATES PATENT AND TRADEMARK OFFICE

UNITED STATES DEPARTMENT OF COMMERCE
United States Patent and Trademark Office
Address: COMMISSIONER FOR PATENTS
P.O. Box 1450
Alexandria, Virginia 22313-1450
www.uspto.gov

APPL NO.	FILING OR 371 (c) DATE	ART UNIT	FIL FEE REC'D	ATTY.DOCKET NO	DRAWINGS	TOT CLMS	IND CLMS
60/851,211	10/11/2006		200	PAZ-281-2			

CONFIRMATION NO. 4089

959
LAHIVE & COCKFIELD, LLP
ONE POST OFFICE SQUARE
BOSTON, MA 02109-2127

CORRECTED FILING RECEIPT

OC000000022024982

Date Mailed: 01/17/2007

Receipt is acknowledged of this provisional Patent Application. It will not be examined for patentability and will become abandoned not later than twelve months after its filing date. Be sure to provide the U.S. APPLICATION NUMBER, FILING DATE, NAME OF APPLICANT, and TITLE OF INVENTION when inquiring about this application. Fees transmitted by check or draft are subject to collection. Please verify the accuracy of the data presented on this receipt. **If an error is noted on this Filing Receipt, please mail to the Commissioner for Patents P.O. Box 1450 Alexandria Va 22313-1450. Please provide a copy of this Filing Receipt with the changes noted thereon. If you received a "Notice to File Missing Parts" for this application, please submit any corrections to this Filing Receipt with your reply to the Notice. When the USPTO processes the reply to the Notice, the USPTO will generate another Filing Receipt incorporating the requested corrections (if appropriate).**

Applicant(s)

Michael N. Alekshun, Wakefield, MA;

Power of Attorney: The patent practitioners associated with Customer Number **00959**.

If Required, Foreign Filing License Granted: 01/17/2007

The country code and number of your priority application, to be used for filing abroad under the Paris Convention, is US60/851,211

Projected Publication Date: None, application is not eligible for pre-grant publication

Non-Publication Request: Not applicable

Early-Publication Request: Not applicable

Title

Substituted tetracycline compounds for treatment of bacillus anthracis infections

PROTECTING YOUR INVENTION OUTSIDE THE UNITED STATES

Since the rights granted by a U.S. patent extend only throughout the territory of the United States and have no effect in a foreign country, an inventor who wishes patent protection in another country must apply for a patent in a specific country or in regional patent offices. Applicants may wish to consider the filing of an international application under the Patent Cooperation Treaty (PCT). An international (PCT) application generally has the same effect as a regular national patent application in each PCT-member country. The PCT process **simplifies** the filing of patent applications on the same invention in member countries, but **does not result** in a grant of "an international patent" and does not eliminate the need of applicants to file additional documents and fees in countries where patent protection is desired.

Almost every country has its own patent law, and a person desiring a patent in a particular country must make an application for patent in that country in accordance with its particular laws. Since the laws of many countries differ in various respects from the patent law of the United States, applicants are advised to seek guidance from specific foreign countries to ensure that patent rights are not lost prematurely.

Applicants also are advised that in the case of inventions made in the United States, the Director of the USPTO must issue a license before applicants can apply for a patent in a foreign country. The filing of a U.S. patent application serves as a request for a foreign filing license. The application's filing receipt contains further information and guidance as to the status of applicant's license for foreign filing.

Applicants may wish to consult the USPTO booklet, "General Information Concerning Patents" (specifically, the section entitled "Treaties and Foreign Patents") for more information on timeframes and deadlines for filing foreign patent applications. The guide is available either by contacting the USPTO Contact Center at 800-786-9199, or it can be viewed on the USPTO website at http://www.uspto.gov/web/offices/pac/doc/general/index.html.

For information on preventing theft of your intellectual property (patents, trademarks and copyrights), you may wish to consult the U.S. Government website, http://www.stopfakes.gov. Part of a Department of Commerce initiative, this website includes self-help "toolkits" giving innovators guidance on how to protect intellectual property in specific countries such as China, Korea and Mexico. For questions regarding patent enforcement issues, applicants may call the U.S. Government hotline at 1-866-999-HALT (1-866-999-4158).

LICENSE FOR FOREIGN FILING UNDER
Title 35, United States Code, Section 184
Title 37, Code of Federal Regulations, 5.11 & 5.15

GRANTED

The applicant has been granted a license under 35 U.S.C. 184, if the phrase "IF REQUIRED, FOREIGN FILING LICENSE GRANTED" followed by a date appears on this form. Such licenses are issued in all applications where the conditions for issuance of a license have been met, regardless of whether or not a license may be required as set forth in 37 CFR 5.15. The scope and limitations of this license are set forth in 37 CFR 5.15(a) unless an earlier license has been issued under 37 CFR 5.15(b). The license is subject to revocation upon written notification. The date indicated is the effective date of the license, unless an earlier license of similar scope has been granted under 37 CFR 5.13 or 5.14.

This license is to be retained by the licensee and may be used at any time on or after the effective date thereof unless it is revoked. This license is automatically transferred to any related applications(s) filed under 37 CFR 1.53(d). This license is not retroactive.

The grant of a license does not in any way lessen the responsibility of a licensee for the security of the subject matter as imposed by any Government contract or the provisions of existing laws relating to espionage and the national security or the export of technical data. Licensees should apprise themselves of current regulations especially with respect to certain countries, of other agencies, particularly the Office of Defense Trade Controls, Department of State (with respect to Arms, Munitions and Implements of War (22 CFR 121-128)); the Bureau of Industry and Security, Department of Commerce (15 CFR parts 730-774); the Office of Foreign Assets Control, Department of Treasury (31 CFR Parts 500+) and the Department of Energy.

NOT GRANTED

No license under 35 U.S.C. 184 has been granted at this time, if the phrase "IF REQUIRED, FOREIGN FILING LICENSE GRANTED" DOES NOT appear on this form. Applicant may still petition for a license under 37 CFR 5.12, if a license is desired before the expiration of 6 months from the filing date of the application. If 6 months has lapsed from the filing date of this application and the licensee has not received any indication of a secrecy order under 35 U.S.C. 181, the licensee may foreign file the application pursuant to 37 CFR 5.15(b).

UNITED STATES PATENT AND TRADEMARK OFFICE

COMMISSIONER FOR PATENTS
UNITED STATES PATENT AND TRADEMARK OFFICE
P.O. BOX 1450
ALEXANDRIA, VA 22313-1450
www.uspto.gov

Paper No.

Attn: Douglas P. Mueller
HAMRE, SCHUMANN, MUELLER &
LARSON, P.C.
P.O. Box 2902
Minneapolis MN 55402-0902

COPY MAILED

JAN 18 2007

OFFICE OF PETITIONS

In re Application of	:	
Jacek Slon-Usaiewicz	:	
Application No. 60/851,256	:	DECISION
Filed: October 12, 2006	:	ON PETITION
Atty Docket No. 20052.6USP2	:	

This is in response to the "PETITION IN RESPONSE TO NOTICE OF INCOMPLETE PROVISIONAL APPLICATION," filed November 14, 2006, requesting that the above-identified application be accorded a filing date of October 12, 2006.

The petition is **GRANTED**.

Application papers in the above-identified application were deposited on October 12, 2006. However, on November 3, 2006, the Initial Patent Examination Division mailed a "Notice of Incomplete Provisional Application," stating that the application had not been accorded a filing date because the application was deposited without drawings.

In response, applicant timely filed the instant petition. Applicant asserts that the drawings previously mentioned in the specification are not necessary for the understanding of the subject matter of the application.

35 U.S.C. 111(b)(4) provides that:

> The filing date of a provisional application shall be the date on which the specification and any required drawing are received in the Patent and Trademark Office.

However, it is the practice of the Office to treat an application that contains at least one process or method claim as an application for which a drawing is not necessary for an understanding of the invention under 35 U.S.C. 113 (first sentence). MPEP § 601.01(f).

A review of the original application papers filed October 12, 2006, reveals that they contained at least one method claim. Thus, the application, containing a specification and at least one claim was complete within the meaning of 37 CFR §1.53(b), and entitled to a filing date of October 12, 2006.

Accordingly, the petition is granted to the extent that the provisional application will be accorded the October 12, 2006 filing date with no drawings as a part of the original disclosure of the application.

However, in regards to withdrawing the Notice, MPEP §601.01(f) also states that:

> ...a provisional application having at least some disclosure, directed to subject matter discussed above for which a drawing is usually not considered essential for a filing date, describing drawing figure(s) in the specification, but filed without drawings will be treated as an application without all of the drawing figures referred to in the specification as discussed in MPEP §601.01(g), so long as the application contains something that can be construed as a written description.

And, MPEP § 601.01(g) further provides that:

> If the application is filed without all of the drawing figure(s) referred to in the specification, ..., OIPE will mail a "Notice of Omitted Item(s)" indicating that the application papers so deposited have been accorded a filing date, but are lacking some of the figures of the drawings described in the specification.

As the specification contained references to drawing figures, mailing of a Notice requiring submission of those drawings was appropriate. The Office should have mailed a "Notice of Omitted Items" rather than a "Notice of Incomplete Provisional Application."

Given the basis for granting the petition, the petition fee is subject to refund. Accordingly, although authorized, the petition fee has not been charged to petitioner's Deposit Account.

This application is being forwarded to the Office of Initial Patent Examination for:

- **Correction of the filing date to October 12, 2006**; and
- indication in Office records, as appropriate, that "0" sheets of drawings were present on filing.

Applicant will receive appropriate notifications regarding any missing items or fees owed, and other information in due course from OIPE.

Telephone inquiries specific to this decision may be directed to the undersigned at (571) 272-3219.

Nancy Johnson
Senior Petitions Attorney
Office of Petitions

UNITED STATES PATENT AND TRADEMARK OFFICE

UNITED STATES DEPARTMENT OF COMMERCE
United States Patent and Trademark Office
Address: COMMISSIONER FOR PATENTS
P.O. Box 1450
Alexandria, Virginia 22313-1450
www.uspto.gov

APPL NO.	FILING OR 371 (c) DATE	ART UNIT	FIL FEE REC'D	ATTY.DOCKET NO	DRAWINGS	TOT CLMS	IND CLMS
60/851,277	10/11/2006		200	DAVI288.001PRF	18		

CONFIRMATION NO. 4665

CORRECTED FILING RECEIPT

OC000000021906840

20995
KNOBBE MARTENS OLSON & BEAR LLP
2040 MAIN STREET
FOURTEENTH FLOOR
IRVINE, CA 92614

Date Mailed: 01/09/2007

Receipt is acknowledged of this provisional Patent Application. It will not be examined for patentability and will become abandoned not later than twelve months after its filing date. Be sure to provide the U.S. APPLICATION NUMBER, FILING DATE, NAME OF APPLICANT, and TITLE OF INVENTION when inquiring about this application. Fees transmitted by check or draft are subject to collection. Please verify the accuracy of the data presented on this receipt. **If an error is noted on this Filing Receipt, please mail to the Commissioner for Patents P.O. Box 1450 Alexandria Va 22313-1450. Please provide a copy of this Filing Receipt with the changes noted thereon. If you received a "Notice to File Missing Parts" for this application, please submit any corrections to this Filing Receipt with your reply to the Notice. When the USPTO processes the reply to the Notice, the USPTO will generate another Filing Receipt incorporating the requested corrections (if appropriate).**

Applicant(s)

Fares Al-Ejeh, Adelaide, AUSTRALIA;
Jocelyn M. Darby, Blackwood, AUSTRALIA;
Michael P. Brown, St. Georges, AUSTRALIA;

Power of Attorney: The patent practitioners associated with Customer Number **20995**.

If Required, Foreign Filing License Granted: 11/01/2006

The country code and number of your priority application, to be used for filing abroad under the Paris Convention, is US60/851,277

Projected Publication Date: None, application is not eligible for pre-grant publication

Non-Publication Request: Not applicable

Early-Publication Request: Not applicable

Title

Method of diagnosis and agents useful for same

PROTECTING YOUR INVENTION OUTSIDE THE UNITED STATES

Since the rights granted by a U.S. patent extend only throughout the territory of the United States and have no effect in a foreign country, an inventor who wishes patent protection in another country must apply for a patent in a specific country or in regional patent offices. Applicants may wish to consider the filing of an international application under the Patent Cooperation Treaty (PCT). An international (PCT) application generally has the same effect as a regular national patent application in each PCT-member country. The PCT process **simplifies** the filing of patent applications on the same invention in member countries, but **does not result** in a grant of "an international patent" and does not eliminate the need of applicants to file additional documents and fees in countries where patent protection is desired.

Almost every country has its own patent law, and a person desiring a patent in a particular country must make an application for patent in that country in accordance with its particular laws. Since the laws of many countries differ in various respects from the patent law of the United States, applicants are advised to seek guidance from specific foreign countries to ensure that patent rights are not lost prematurely.

Applicants also are advised that in the case of inventions made in the United States, the Director of the USPTO must issue a license before applicants can apply for a patent in a foreign country. The filing of a U.S. patent application serves as a request for a foreign filing license. The application's filing receipt contains further information and guidance as to the status of applicant's license for foreign filing.

Applicants may wish to consult the USPTO booklet, "General Information Concerning Patents" (specifically, the section entitled "Treaties and Foreign Patents") for more information on timeframes and deadlines for filing foreign patent applications. The guide is available either by contacting the USPTO Contact Center at 800-786-9199, or it can be viewed on the USPTO website at http://www.uspto.gov/web/offices/pac/doc/general/index.html.

For information on preventing theft of your intellectual property (patents, trademarks and copyrights), you may wish to consult the U.S. Government website, http://www.stopfakes.gov. Part of a Department of Commerce initiative, this website includes self-help "toolkits" giving innovators guidance on how to protect intellectual property in specific countries such as China, Korea and Mexico. For questions regarding patent enforcement issues, applicants may call the U.S. Government hotline at 1-866-999-HALT (1-866-999-4158).

LICENSE FOR FOREIGN FILING UNDER
Title 35, United States Code, Section 184
Title 37, Code of Federal Regulations, 5.11 & 5.15

GRANTED

The applicant has been granted a license under 35 U.S.C. 184, if the phrase "IF REQUIRED, FOREIGN FILING LICENSE GRANTED" followed by a date appears on this form. Such licenses are issued in all applications where the conditions for issuance of a license have been met, regardless of whether or not a license may be required as set forth in 37 CFR 5.15. The scope and limitations of this license are set forth in 37 CFR 5.15(a) unless an earlier license has been issued under 37 CFR 5.15(b). The license is subject to revocation upon written notification. The date indicated is the effective date of the license, unless an earlier license of similar scope has been granted under 37 CFR 5.13 or 5.14.

This license is to be retained by the licensee and may be used at any time on or after the effective date thereof unless it is revoked. This license is automatically transferred to any related applications(s) filed under 37 CFR 1.53(d). This license is not retroactive.

The grant of a license does not in any way lessen the responsibility of a licensee for the security of the subject matter as imposed by any Government contract or the provisions of existing laws relating to espionage and the national security or the export of technical data. Licensees should apprise themselves of current regulations especially with respect to certain countries, of other agencies, particularly the Office of Defense Trade Controls, Department of State (with respect to Arms, Munitions and Implements of War (22 CFR 121-128)); the Bureau of

Industry and Security, Department of Commerce (15 CFR parts 730-774); the Office of Foreign Assets Control, Department of Treasury (31 CFR Parts 500+) and the Department of Energy.

NOT GRANTED

No license under 35 U.S.C. 184 has been granted at this time, if the phrase "IF REQUIRED, FOREIGN FILING LICENSE GRANTED" DOES NOT appear on this form. Applicant may still petition for a license under 37 CFR 5.12, if a license is desired before the expiration of 6 months from the filing date of the application. If 6 months has lapsed from the filing date of this application and the licensee has not received any indication of a secrecy order under 35 U.S.C. 181, the licensee may foreign file the application pursuant to 37 CFR 5.15(b).

UNITED STATES PATENT AND TRADEMARK OFFICE

Commissioner for Patents
United States Patent and Trademark Office
P.O. Box 1450
Alexandria, VA 22313-1450
www.uspto.gov

FISH & RICHARDSON, PC
P.O. BOX 1022
MINNEAPOLIS MN 55440-1022

COPY MAILED

JUN 07 2007

OFFICE OF PETITIONS

In re Application of Bailey et al. :
Application No. 60/851,513 : Decision on Petition
Filing Date: October 14, 2006 :
Attorney Docket No. 21735-017P01 :

This is a decision in response to the petition filed December 21, 2006, requesting, in effect, that Figure 4 of the drawings filed on December 21, 2006, be entered as part of the original disclosure.

The petition is **dismissed**.

The application was filed October 14, 2006.

The Office of Initial Patent Examination mailed a "Notice of Missing Parts" on October 31, 2006. The Notice stated in part that Figure 4 of the drawings did not appear to be part of the application as filed.

Petitioner alleges Figure 4 was filed with the original application. In support, petitioner states the Provisional Application Cover Sheet filed October 14, 2006, stated it was being filed with 4 sheets of drawings.

An applicant alleging that a paper was filed in the USPTO and later misplaced has the burden of proving the allegation by a preponderance of the evidence.

The official government record, maintained by disinterested USPTO employees as a part of their customary and usual duties, indicates the drawing sheet at issue was not filed on October 14, 2006. The contents of the cover sheet have been considered. However, petitioner has not established the cover sheet has more probative value than the official government record of what was actually received in the USPTO on October 14, 2006. Therefore, petitioner has failed to prove that Figure 4 was filed on October 14, 2006.

The instant petition illustrates the reason the USPTO established a practice of providing a receipt for papers filed in the USPTO to any applicant desiring a receipt. The practice, which has been in existence for many years and is well publicized, requires that any paper for which a receipt is desired be filed with a self-addressed postcard identifying the paper. When the Office receives correspondence, an employee verifies that the documentation listed on the postcard is present,

stamps it, and then mails it back to the applicant. A postcard receipt itemizing and properly identifying filed papers will be considered serves as prima facie evidence of receipt in the USPTO of all the items listed thereon on the date stamped thereon by the USPTO. Section 503 of the Manual Of Patent Examining Procedure can be consulted for further information regarding postcard receipt practice and procedures.

All the evidence present in the file has been carefully considered, but is not persuasive that Figure 4 of the drawings was submitted with the original application.

The drawing sheet containing Figure 4 filed on December 21, 2006, was not present in the Office on October 14, 2006. Therefore, those drawings are not parts of the original disclosure of the present application and will not be used to process the application.

The original application papers will include only those application papers present on the date of deposit.

Any request for reconsideration must be submitted within TWO (2) MONTHS from the mail date of this decision. No further petition fee is required for the request. Extensions of time under 37 CFR 1.136(a) are NOT permitted. The reconsideration request should include a cover letter entitled "Renewed Petition under 37 CFR 1.137(b)." This is **not** final agency action within the meaning of 5 U.S.C. § 704.

Further correspondence with respect to this matter should be addressed as follows:

By mail: Mail Stop Petition
Commissioner for Patents
P.O. Box 1450
Alexandria, VA 22313-1450

By facsimile: (571) 273-8300
Attn: Office of Petitions

By hand: U.S. Patent and Trademark Office
Customer Service Window
Randolph Building
401 Dulany Street
Alexandria, VA 22314

Telephone inquiries regarding this communication should be directed to Petitions Attorney Steven Brantley at (571) 272-3203.

Charles Steven Brantley
Senior Petitions Attorney
Office of Petitions

UNITED STATES PATENT AND TRADEMARK OFFICE

Commissioner for Patents
United States Patent and Trademark Office
P.O. Box 1450
Alexandria, VA 22313-1450
www.uspto.gov

MORGAN LEWIS & BOCKIUS LLP
1111 PENNSYLVANIA AVENUE
WASHINGTON DC 20004

COPY MAILED

JAN 16 2007

OFFICE OF PETITIONS

In re Application of	:	
Gallerano, et al.	:	
Application No. 60/851,804	:	ON PETITION
Filed: October 10, 2006	:	
Attorney Docket No. 060889-5053-PR	:	

This is a decision on the petition under 37 CFR 1.10, filed November 8, 2006, requesting that the above-identified application be accorded a filing date of October 10, 2006, rather than the presently accorded filing date of October 11, 2006.

Petitioners allege that the application was deposited in Express Mail service on October 10, 2006. However, the "date-in" on petitioners' Express Mail customer receipt is blank.

Paragraph (a) of 37 CFR 1.10 states that:

> Any correspondence received by the Patent and Trademark Office (Office) that was delivered by the "Express Mail Post Office to Addressee" service of the United States Postal Service (USPS) will be considered filed in the Office on the date of deposit with the USPS. <u>The date of deposit with the USPS is shown by the "date-in" on the "Express Mail" mailing label or other official USPS notation.</u> If the USPS deposit date cannot be determined, the correspondence will be accorded the Office receipt date as the filing date. <u>See</u> §1.6(a). (Emphasis added).

Paragraph (d) of 37 CFR 1.10 states that:

> Any person filing correspondence under this section that was received by the Office and delivered by the "Express Mail Post Office to Addressee" service of the USPS, who can show that the "date-in" on the "Express Mail" mailing label or other official notation entered by the USPS was incorrectly entered or omitted by the USPS, may petition the Commissioner to accord the correspondence a filing date as of the date the correspondence is shown to have been deposited with the USPS, provided that:
>
> > (1) The petition is filed promptly after the person becomes aware that the Office has accorded, or will accord, a filing date based upon an incorrect entry by the USPS;
> >
> > (2) The number of the "Express Mail" mailing label was placed on the paper(s) or fee(s) that constitute the correspondence prior to the original mailing by "Express Mail"; and
> >
> > (3) The petition includes a showing which establishes, to the satisfaction of the Commissioner, that the requested filing date was the date the correspondence was deposited in "Express Mail Post Office to Addressee" service prior to the last scheduled pickup for that day. Any showing pursuant to this paragraph must be corroborated by evidence from the USPS or that came into being after deposit and within one business day of the deposit of the correspondence in the "Express Mail Post Office to Addressee" service of the USPS.

Here, petitioners have met the requirements of 37 CFR 1.10(d). The petition was filed promptly. In addition, the number of the Express Mail mailing label (EV 907 292 855 US) was placed on the application papers. Lastly, while the Express Mail label does not bear a date-in date, the fact that the label bears a USPS date stamp of October 10, 2006 serves as "corroborating evidence" that the above-identified application was deposited with the USPS on October 10, 2006.

In view of the above, the application is entitled to a filing date of October 10, 2006. The petition is **GRANTED**.

Given the basis for granting this petition, no petition fee was required, and none has been charged.

The application file is being forwarded to the Office of Initial Patent Examination for further processing with a filing date of **October 10, 2006, not October 11, 2006.**

Telephone inquires specific to this decision may be directed to the undersigned at (571)272-3207.

Cliff Congo
Petitions Attorney
Office of Petitions

UNITED STATES PATENT AND TRADEMARK OFFICE

Commissioner for Patents
United States Patent and Trademark Office
P.O. Box 1450
Alexandria, VA 22313-1450
www.uspto.gov

BLAKELY SOKOLOFF TAYLOR & ZAFMAN
1279 OAKMEAD PARKWAY
SUNNYVALE CA 94085-4040

COPY MAILED
NOV 0 2 2007
OFFICE OF PETITIONS

In re Application of	:	
Charles S. Bennett III	:	
Application No. 60/852186	:	
Filing or 371(c) Date: 10/16/2006	:	
Attorney Docket Number:	:	
8017P001Z	:	ON PETITION

This is a decision on the "Petition Under 37 CFR § 1.181(a) to Withdraw the Holding of Abandonment," filed August 29, 2007.

This Petition is hereby **dismissed**.

Any further petition must be submitted within TWO (2) MONTHS from the mail date of this decision. Extensions of time under 37 CFR 1.136(a) are permitted. The reconsideration request should include a cover letter entitled "Renewed Petition under [insert the applicable code section]." This is **not** final agency action within the meaning of 5 U.S.C. § 704.

The above-identified application became abandoned for failure to timely and properly reply to the Notice to File Missing Parts of Nonprovisional Application ("Notice"), mailed November 3, 2006. The Notice set a two (2) month period for reply. Extensions of time were available under 37 CFR 1.136(a). No response having been received, the application became abandoned January 4, 2007. A Notice of Abandonment was mailed July 9, 2007.

Applicant's Assertion

Applicant files the instant petition and asserts that a timely reply to the Notice was filed on December 29, 2006, and received by this Office as evidenced by the copy of Applicant's return-receipt postcard. In support of this assertion, Applicant files a copy of the Reply and a copy of his return-receipt postcard acknowledging receipt by this Office of the Reply on January 4, 2007.

A review of the Reply reveals that the Reply contained a Certificate of Mailing under 37 CFR 1.8, certifying that the Reply was mailed to this Office on December 29, 2006. The Certificate of Mailing was executed by Caria Vignola.

Applicable Law, Rules and MPEP

37 CFR 1.8(b), Certificate of mailing or transmission, .The MPEP 711.03(c)A, Petition To Withdraw Holding of Abandonment Based on Failure To Receive Office Action, explains that

> (b) In the event that correspondence is considered timely filed by being mailed or transmitted in accordance with paragraph (a) of this section, but not received in the U.S. Patent and Trademark Office after a reasonable amount of time has elapsed from the time of mailing or transmitting of the correspondence, or after the application is held to be abandoned, or after the proceeding is dismissed, terminated, or decided with prejudice, the correspondence will be considered timely if the party who forwarded such correspondence:
> (1) Informs the Office of the previous mailing or transmission of the correspondence promptly after becoming aware that the Office has no evidence of receipt of the correspondence;
> (2) Supplies an additional copy of the previously mailed or transmitted correspondence and certificate; and
> (3) Includes a statement which attests on a personal knowledge basis or to the satisfaction of the Director to the previous timely mailing or transmission. If the correspondence was sent by facsimile transmission, a copy of the sending unit's report confirming transmission may be used to support this statement.
> (c) The Office may require additional evidence to determine if the correspondence was timely filed. (Emphasis supplied).

37 CFR 1.8(b)

Analysis and conclusion

Applicant has failed to comply with 37 CFR 1.8(b)(3). In this regard, a statement from Caria Vignola, which attests on a personal knowledge basis, to the previous timely mailing or transmission, is required. While Applicant has submitted a copy of his return-receipt postcard, the postcard stamp is dated January 4, 2007. Evidence of timely filing, to wit - a statement from Caria Vignola, is required. The petition is dismissed without prejudice. Applicant should file a request for reconsideration of petition and include the necessary statement.

Further correspondence with respect to this matter should be addressed as follows:

By mail: Director for Patents
PO Box 1450
Alexandria, VA 22313-1450

By FAX: (571) 273-8300
Attn: Office of Petitions

By hand: Customer Service Window
Randolph Building
401 Dulany Street
Alexandria, VA 22314

Telephone inquiries concerning this matter should be directed to the undersigned at (571) 272-3232.

Derek L. Woods
Attorney
Office of Petitions

UNITED STATES PATENT AND TRADEMARK OFFICE

Commissioner for Patents
United States Patent and Trademark Office
P.O. Box 1450
Alexandria, VA 22313-1450
www.uspto.gov

BLAKELY SOKOLOFF TAYLOR & ZAFMAN
1279 OAKMEAD PARKWAY
SUNNYVALE CA 94085-4040

COPY MAILED

FEB 1 3 2008

OFFICE OF PETITIONS

In re Application of	:	
Charles S. Bennett III	:	
Application No.: 60/852186	:	DECISION ON
Filing or 371(c) Date: 10/16/2006	:	PETITION
Attorney Docket Number: 8017P001Z	:	

This is a decision in response to the Request for Reconsideration of Petition Under 37 CFR § 1.181(a) to Withdraw the Holding of Abandonment, filed December 31, 2007.

This Petition is hereby **granted**.

The above-identified application became abandoned for failure to timely and properly reply to the Notice to File Missing Parts of Nonprovisional Application, ("Notice"), mailed November 3, 2006. The Notice set a non-extendable two (2) month period for reply. No reply having been received, the application became abandoned on January 4, 2007. A Notice of Abandonment was mailed July 9, 2007.

Applicant filed a petition to withdraw the holding of abandonment on August 29, 2007, which was dismissed in Decision mailed November 2, 2007, for failing to meet the requirements of a grantable petition under 37 CFR 1.181.

Applicant files the present renewed petition and includes a statement under 37 CFR 1.8(b)(3) from Ms. Caria Vignola attesting to the mailing of the reply to this Office on December 29, 2006.

The file record does not include the originally submitted papers. Failure to receive correspondence which includes a certificate of mailing or certificate of facsimile transmission is addressed in 37 CFR 1.8(b), reproduced below:

> (b) In the event that correspondence is considered timely filed by being mailed or transmitted in accordance with paragraph (a) of this section, but not received in the U.S. Patent and Trademark Office after a reasonable amount of time has elapsed from the time of mailing or transmitting of the correspondence, or after the application is held to be abandoned, or after the proceeding is dismissed, terminated, or decided with prejudice, the correspondence will be considered timely if the party who forwarded such correspondence:

(1) Informs the Office of the previous mailing or transmission of the correspondence promptly after becoming aware that the Office has no evidence of receipt of the correspondence;
(2) Supplies an additional copy of the previously mailed or transmitted correspondence and certificate; and
(3) Includes a statement which attests on a personal knowledge basis or to the satisfaction of the Director to the previous timely mailing or transmission. If the correspondence was sent by facsimile transmission, a copy of the sending unit's report confirming transmission may be used to support this statement.
(c) The Office may require additional evidence to determine if the correspondence was timely filed. (Emphasis supplied).

37 CFR 1.8(b)

Applicant has complied with the requirements of 37 CFR 1.8(b).

In view of the foregoing, the petition is granted. The holding of abandonment is hereby withdrawn.

The application will be referred to the Office of Initial Patent Application Processing for processing of the Reply to the Notice, and for continued processing of the application.

Telephone inquiries concerning this matter should be directed to the undersigned at (571) 272-3232.

Derek L. Woods
Attorney
Office of Petitions

UNITED STATES PATENT AND TRADEMARK OFFICE

COMMISSIONER FOR PATENTS
UNITED STATES PATENT AND TRADEMARK OFFICE
P.O. BOX 1450
ALEXANDRIA, VA 22313-1450
www.uspto.gov

AMSTER, ROTHSTEIN & EBENSTEIN LLP
90 PARK AVENUE
NEW YORK, NY 10016

COPY MAILED

AUG 30 2007

OFFICE OF PETITIONS

In re Application of :
Joel Rosenblatt, et al :
Application No. 60/852,630 : DECISION GRANTING PETITION
Filed: October 18, 2006 :
Attorney Docket No. 3600/434 :

This is a decision on the petition filed November 9, 2006, requesting that the above-identified application be accorded a filing date of October 18, 2006, instead of the presently accorded date of October 19, 2006

Petitioner requests the earlier filing date on the basis that the application was purportedly deposited with the U. S. Postal Service (USPS) as Express Mail on October 18, 2006. In support, petitioner provides a copy of the Express Mail label, No. EV725790051US. The same Express Mail tracking number appears on the original transmittal letter found in the file.

It is noted that while the "date-in" is not entered on the copy of the Express Mail mailing label, the label includes a USPS receipt date stamp of "OCT 18 2006." Accordingly, the evidence is convincing that the application was deposited as "Express Mail" with the U.S. Postal Service on October 18, 2006.

The petition is **GRANTED**.

No petition fee was charged to counsel's deposit account, nor is one due.

The application is being referred to Office of Initial Patent Examination (OIPE) for correction of the filing date to **October 18, 2006**, and issuance of a Corrected Official Filing Receipt.

Telephone inquires related to this decision should be directed to the undersigned at (571) 272-3204. Telephone inquiries related to OIPE processing should be directed to their hotline at (571) 272-4000.

Sherry D. Brinkley
Petitions Examiner
Office of Petitions

UNITED STATES PATENT AND TRADEMARK OFFICE

COMMISSIONER FOR PATENTS
UNITED STATES PATENT AND TRADEMARK OFFICE
P.O. BOX 1450
ALEXANDRIA, VA 22313-1450
www.uspto.gov

DONN K. HARMS
PATENT & TRADEMARK LAW CENTER
SUITE 100
12702 VIA CORTINA
DEL MAR, CA 92014

COPY MAILED

MAY 09 2007

OFFICE OF PETITIONS

In re Application of	:	
Franz Freudenthal	:	
Application No. 60/853,128	:	ON PETITION
Filed: October 20, 2006	:	
Attorney Docket No. 3804-PAT	:	

This is a decision on the petition under 37 CFR 1.10(d) filed December 12, 2006, requesting that the above-identified application be accorded a filing date of October 20, 2006, rather than the presently accorded filing date of October 21, 2006.

Applicant requests the earlier filing date on the basis that the application was purportedly deposited in Express Mail service on October 20, 2006, prior to the last scheduled pickup for that day pursuant to the requirements of 37 CFR 1.10. However, the Express Mail label identified in the original application papers shows a "date-in" of October 21, 2006. Applicant is alleging that the date of mailing shown by the Express Mail receipt is a U.S. Postal Service (USPS) error and the correct date of mailing is October 20, 2006.

In support, the petition is accompanied by a copy of an Express Mail log maintained by the petitioner showing an entry made on October 23, 2006, by LF (Laura Friedrichsen) indicating that a patent application identified by Attorney Docket No. 3804-PAT and Express Mail label No. EQ328754830US was deposited in an Express Mail drop box on October 20, 2006, at 4:45 and that the last scheduled pickup for the box on that date was 5:00 p.m. The petition is also accompanied by statements by Laura Friedrichsen and Attorney Donn Harms stating that the application was deposited in Express Mail service prior to the posted last time of pickup on October 20, 2006.

37 CFR § 1.10(d) provides that:

Any person filing correspondence under this section that was received by the Office and delivered by the "Express Mail Post Office to Addressee" service of the USPS, who can show that the "date-in" on the "Express Mail" mailing label or other official notation entered by the USPS was incorrectly entered or omitted by the USPS, may petition the Director to accord the correspondence a filing date as of the date the correspondence is shown to have been deposited with the USPS, provided that:

(1) The petition is filed promptly after the person becomes aware that the Office has accorded, or will accord, a filing date based upon an incorrect entry by the USPS;

(2) The number of the "Express Mail" mailing label was placed on the paper(s) or fee(s) that constitute the correspondence prior to the original mailing by "Express Mail"; and

(3) The petition includes a showing which establishes, to the satisfaction of the Director, that the requested filing date was the date the correspondence was deposited in the "Express Mail Post Office to Addressee" service prior to the last scheduled pickup for that day. Any showing pursuant to this paragraph must be corroborated by evidence from the USPS or that came into being after deposit and within one business day of the deposit of the correspondence in the "Express Mail Post Office to Addressee" service of the USPS.

The petition was filed promptly within the meaning of § 1.10(d)(1). A review of a copy of the application transmittal reveals that it identifies the correspondence that constitutes the application and it includes the Express Mail mailing label number thereon. Petitioner has met § 1.10(d)(2).

Finally, as to § 1.10(d)(3), petitioner's arguments and the totality of the evidence have been considered, and it is concluded that petitioner has made an adequate showing that October 20, 2006 was the date the correspondence was deposited in the "Express Mail Post Office to Addressee" service prior to the last scheduled pickup for the day. The statement of patent attorney Donn Harms supports a conclusion that 5:00 pm was the last scheduled pickup for the relevant drop box and Ms. Friedrichsen attests to having made the deposit before that time.

As stated in MPEP 513

> Evidence that came into being after deposit and within one day after the deposit of the correspondence as "Express Mail" may be in the form of a log book which contains information such as the "Express Mail" number; the application number, attorney docket number or other such file identification number; the place, date and time of deposit; the time of the last scheduled pick-up for that date and place of deposit; the depositor's initials or signature; and the date and time of entry in the log.

Further, the log book corroborates a conclusion that the correspondence was placed in the Express Mail on October 20, 2006, prior to the last scheduled pickup. Patent attorney Donn Harms states the entry in the log book was made on the next business day. Petitioner may wish to update his log to include an entry for the "date and time of entry in the log" as stated in MPEP 513. Otherwise, the Office may have a question as to whether the entry came into being within one business day.

In view of the above, it is concluded that the "date-in" shown on the Express Mail label is incorrect and that the correct date of deposit in Express Mail service is October 20, 2006.

The petition is GRANTED. Since no petition fee is required under 37 CFR 1.10, the $400 petition fee submitted with the petition is subject to refund. Any request for refund must included a copy of this decision and be mailed to Mail Stop 16, Director of the U.S. Patent and Trademark Office, P. O. Box 1450, Alexandria, VA 22313-1450 or faxed to the Customer Service Help Desk at (571) 273-6500.

The application is being referred to Initial Patent Examination Division (OIPE) for correction of the filing date to **October 20, 2006** and issuance of a corrected filing receipt.

Telephone inquires related to this decision should be directed to the undersigned at (571) 272-3204. Telephone inquiries related to OIPE processing should be directed to their hotline at (571) 272-4000.

Sherry D. Brinkley
Petitions Examiner
Office of Petitions

UNITED STATES PATENT AND TRADEMARK OFFICE

UNITED STATES DEPARTMENT OF COMMERCE
United States Patent and Trademark Office
Address: COMMISSIONER FOR PATENTS
P.O. Box 1450
Alexandria, Virginia 22313-1450
www.uspto.gov

APPLICATION NUMBER	FILING OR 371(c) DATE	FIRST NAMED APPLICANT	ATTY. DOCKET NO.
11/320,997	12/29/2005	John Chandler Hopkins III	USAA-0033/US-0070.02

60/853296

CONFIRMATION NO.

59075
WOODCOCK WASHBURN LLP
ONE LIBERTY PLACE
46TH FLOOR
PHILADELPHIA, PA 19103

Date Mailed: 10/24/2006

DECISION GRANTING REQUEST TO CONVERT TO PROVISIONAL

This is a decision on the request under 37 CFR 1.53(c)(2) received in the U.S. Patent and Trademark Office on **02/24/2006,** to convert the above-identified application to a provisional application under 35 U.S.C. 111(b) and 37 CFR 1.53(c).

The request is granted.

The application will be processed in the Office of Initial Patent Examination (OIPE) as a provisional application under 35 U.S.C. 111(b) and 37 CFR 1.53(c), including the assignment of a new provisional application number.

The provisional application number is **60/853,296.** The filing receipt for the provisional application number will be mailed to the applicant by OIPE in due course.

JANICE L TIPPETT
Office of Initial Patent Examination
(571) 272-4000, or 1-800-PTO-9199, or 1-800-972-6382

PART 2 - OFFICE COPY

UNITED STATES PATENT AND TRADEMARK OFFICE

Commissioner for Patents
United States Patent and Trademark Office
P.O. Box 1450
Alexandria, VA 22313-1450
www.uspto.gov

MAILED
FROM DIRECTOR'S OFFICE

OCT 17 2006

TECHNOLOGY CENTER 3600

Woodcock Washburn LLP
One Liberty Place
46th Floor
Philadelphia, PA 19103

In re application of	:	
HOPKINS, John Chandler III	:	
Application No. 11/320,997	:	DECISION ON PETITION
Filed: December 29, 2005	:	TO CONVERT TO A
Attorney Docket No. USAA-0033/US-0070.02	:	PROVISIONAL APPLICATION
For: PERSONALIZED FINANCIAL	:	
EXPOSURE PROTECTION	:	

This is a decision on the petition under 37 CFR 1.53(c)(2) filed February 24, 2006 to convert the above-identified application to a provisional application under 35 U.S.C. 111(b) and 37 CFR 1.53(c)(2).

The requirements for granting the conversion are: (A) a petition requesting conversion and the petition fee set forth in 37 CFR 1.17(q), and (B) the petition must be filed prior to the abandonment of the 37 CFR 1.53(b) application, the payment of the issue fee, the expiration of 12 months after the filing date of the application, or the filing of a request for a statutory invention registration under 37 CFR 1.293, whichever event is earlier. Upon granting the petition, no fees properly paid in the 37 CFR 1.53(b) application are entitled to be refunded.

Since all of the requirements for conversion to a provisional application under 37 CFR 1.53(c)(2) have been met, the petition is **GRANTED**.

The application will be assigned a new provisional application number and will be further processed by the Office of National Application Review (ONAR) as a **PROVISIONAL** application under 35 U.S.C. 111(b) and 37 CFR 1.53(c)(2). The new provisional application number will be communicated to applicant by ONAR in due course.

Wynn Coggins, Director
Technology Center 3600
(571) 272-5350

WC/kd: 10/10/06

Copied from 11320997 on 10/26/2006

UNITED STATES PATENT AND TRADEMARK OFFICE

Commissioner for Patents
United States Patent and Trademark Office
P.O. Box 1450
Alexandria, VA 22313-1450
www.uspto.gov

Woodcock Washburn LLP
One Liberty Place
46th Floor
Philadelphia, PA 19103

MAILED
FROM DIRECTOR'S OFFICE
OCT 17 2006
TECHNOLOGY CENTER 3600

In re application of :
HOPKINS, John Chandler III :
Application No. 11/321,962 :
Filed: December 29, 2005 :
Attorney Docket No. USAA-0035/US-0070.04:
For: PERSONALIZED FINANCIAL :
EXPOSURE PROTECTION :

DECISION ON PETITION
TO CONVERT TO A
PROVISIONAL APPLICATION

This is a decision on the petition under 37 CFR 1.53(c)(2) filed February 24, 2006 to convert the above-identified application to a provisional application under 35 U.S.C. 111(b) and 37 CFR 1.53(c)(2).

The requirements for granting the conversion are: (A) a petition requesting conversion and the petition fee set forth in 37 CFR 1.17(q), and (B) the petition must be filed prior to the abandonment of the 37 CFR 1.53(b) application, the payment of the issue fee, the expiration of 12 months after the filing date of the application, or the filing of a request for a statutory invention registration under 37 CFR 1.293, whichever event is earlier. Upon granting the petition, no fees properly paid in the 37 CFR 1.53(b) application are entitled to be refunded.

Since all of the requirements for conversion to a provisional application under 37 CFR 1.53(c)(2) have been met, the petition is **GRANTED**.

The application will be assigned a new provisional application number and will be further processed by the Office of National Application Review (ONAR) as a **PROVISIONAL** application under 35 U.S.C. 111(b) and 37 CFR 1.53(c)(2). The new provisional application number will be communicated to applicant by ONAR in due course.

Wynn Coggins, Director
Technology Center 3600
(571) 272-5350

WC/rr: 10/06/06

Copied from 11321962 on 10/26/2006

UNITED STATES PATENT AND TRADEMARK OFFICE

Commissioner for Patents
United States Patent and Trademark Office
P.O. Box 1450
Alexandria, VA 22313-1450
www.uspto.gov

MAILED
FROM DIRECTOR'S OFFICE

OCT 17 2006

TECHNOLOGY CENTER 3600

Woodcock Washburn LLP
One Liberty Place
46th Floor
Philadelphia, PA 19103

In re application of ZETTNER, Steven Dale Application No. 11/321,566 Filed: December 29, 2005 Attorney Docket No. USAA-0047/US-0071.05 For: MULTI-PURPOSE TRANSACTION ACCOUNT	DECISION ON PETITION TO CONVERT TO A PROVISIONAL APPLICATION

This is a decision on the petition under 37 CFR 1.53(c)(2) filed February 24, 2006 to convert the above-identified application to a provisional application under 35 U.S.C. 111(b) and 37 CFR 1.53(c)(2).

The requirements for granting the conversion are: (A) a petition requesting conversion and the petition fee set forth in 37 CFR 1.17(q), and (B) the petition must be filed prior to the abandonment of the 37 CFR 1.53(b) application, the payment of the issue fee, the expiration of 12 months after the filing date of the application, or the filing of a request for a statutory invention registration under 37 CFR 1.293, whichever event is earlier. Upon granting the petition, no fees properly paid in the 37 CFR 1.53(b) application are entitled to be refunded.

Since all of the requirements for conversion to a provisional application under 37 CFR 1.53(c)(2) have been met, the petition is **GRANTED**.

The application will be assigned a new provisional application number and will be further processed by the Office of National Application Review (ONAR) as a **PROVISIONAL** application under 35 U.S.C. 111(b) and 37 CFR 1.53(c)(2). The new provisional application number will be communicated to applicant by ONAR in due course.

Wynn Coggins, Director
Technology Center 3600
(571) 272-5350

WC/tt: 10/06/06

Copied from 11321566 on 10/26/2006

UNITED STATES PATENT AND TRADEMARK OFFICE

Commissioner for Patents
United States Patent and Trademark Office
P.O. Box 1450
Alexandria, VA 22313-1450
www.uspto.gov

Woodcock Washburn LLP
One Liberty Place
46th Floor
Philadelphia, PA 19103

MAILED
FROM DIRECTOR'S OFFICE

OCT 17 2006

TECHNOLOGY CENTER 3600

In re application of :
HOPKINS, John Chandler III :
Application No. 11/321,269 :
Filed: December 29, 2005 :
Attorney Docket No. USAA-0036/US-0070.05:
For: PERSONALIZED FINANCIAL :
EXPOSURE PROTECTION :

DECISION ON PETITION
TO CONVERT TO A
PROVISIONAL APPLICATION

This is a decision on the petition under 37 CFR 1.53(c)(2) filed February 24, 2006 to convert the above-identified application to a provisional application under 35 U.S.C. 111(b) and 37 CFR 1.53(c)(2).

The requirements for granting the conversion are: (A) a petition requesting conversion and the petition fee set forth in 37 CFR 1.17(q), and (B) the petition must be filed prior to the abandonment of the 37 CFR 1.53(b) application, the payment of the issue fee, the expiration of 12 months after the filing date of the application, or the filing of a request for a statutory invention registration under 37 CFR 1.293, whichever event is earlier. Upon granting the petition, no fees properly paid in the 37 CFR 1.53(b) application are entitled to be refunded.

Since all of the requirements for conversion to a provisional application under 37 CFR 1.53(c)(2) have been met, the petition is **GRANTED**.

The application will be assigned a new provisional application number and will be further processed by the Office of National Application Review (ONAR) as a **PROVISIONAL** application under 35 U.S.C. 111(b) and 37 CFR 1.53(c)(2). The new provisional application number will be communicated to applicant by ONAR in due course.

Wynn Coggins, Director
Technology Center 3600
(571) 272-5350

WC/kd: 10/10/06

Copied from 11321269 on 10/26/2006

UNITED STATES PATENT AND TRADEMARK OFFICE

UNITED STATES DEPARTMENT OF COMMERCE
United States Patent and Trademark Office
Address: COMMISSIONER FOR PATENTS
P.O. Box 1450
Alexandria, Virginia 22313-1450
www.uspto.gov

APPLICATION NUMBER	FILING OR 371(c) DATE	FIRST NAMED APPLICANT	ATTY. DOCKET NO.
~~11/486,235~~ 60/853 300	07/12/2006	Choon Woo Lee	6206-0005

CONFIRMATION NO.

23980
MINTZ, LEVIN, COHN, FERRIS, GLOVSKY AND POPEO, P.C
1400 PAGE MILL ROAD
PALO ALTO, CA 94304-1124

Date Mailed: 10/24/2006

DECISION GRANTING REQUEST TO CONVERT TO PROVISIONAL

This is a decision on the request under 37 CFR 1.53(c)(2) received in the U.S. Patent and Trademark Office on **08/14/2006,** to convert the above-identified application to a provisional application under 35 U.S.C. 111(b) and 37 CFR 1.53(c).

The request is granted.

The application will be processed in the Office of Initial Patent Examination (OIPE) as a provisional application under 35 U.S.C. 111(b) and 37 CFR 1.53(c), including the assignment of a new provisional application number.

The provisional application number is **60/853,300.** The filing receipt for the provisional application number will be mailed to the applicant by OIPE in due course.

JANICE L TIPPETT
Office of Initial Patent Examination
(571) 272-4000, or 1-800-PTO-9199, or 1-800-972-6382

PART 2 - OFFICE COPY

UNITED STATES PATENT AND TRADEMARK OFFICE

UNITED STATES DEPARTMENT OF COMMERCE
United States Patent and Trademark Office
Address: COMMISSIONER FOR PATENTS
P.O. Box 1450
Alexandria, Virginia 22313-1450
www.uspto.gov

APPLICATION NUMBER	FILING OR 371(c) DATE	FIRST NAMED APPLICANT	ATTY. DOCKET NO.
11/435,394	05/17/2006	Michael M. Scriven	039667-095

CONFIRMATION NO.

20277
MCDERMOTT WILL & EMERY LLP
600 13TH STREET, N.W.
WASHINGTON, DC 20005-3096

Date Mailed: 11/16/2006

DECISION GRANTING REQUEST TO CONVERT TO PROVISIONAL

This is a decision on the request under 37 CFR 1.53(c)(2) received in the U.S. Patent and Trademark Office on **09/08/2006**, to convert the above-identified application to a provisional application under 35 U.S.C. 111(b) and 37 CFR 1.53(c).

The request is granted.

The application will be processed in the Office of Initial Patent Examination (OIPE) as a provisional application under 35 U.S.C. 111(b) and 37 CFR 1.53(c), including the assignment of a new provisional application number.

The provisional application number is **60/853,302.** The filing receipt for the provisional application number will be mailed to the applicant by OIPE in due course.

JANICE L TIPPETT
Office of Initial Patent Examination
(571) 272-4000, or 1-800-PTO-9199, or 1-800-972-6382

PART 2 - OFFICE COPY

Copied from 11435394 on 12/04/2006

UNITED STATES PATENT AND TRADEMARK OFFICE

UNITED STATES DEPARTMENT OF COMMERCE
United States Patent and Trademark Office
Address: COMMISSIONER FOR PATENTS
P.O. Box 1450
Alexandria, Virginia 22313-1450
www.uspto.gov

APPLICATION NUMBER	FILING OR 371(c) DATE	FIRST NAMED APPLICANT	ATTY. DOCKET NO.
11/537,328	09/29/2006	Manish Mangal	4247/SPRI.130259

CONFIRMATION NO.

32423
SPRINT COMMUNICATIONS COMPANY L.P.
6391 SPRINT PARKWAY
KSOPHT0101-Z2100
OVERLAND PARK, KS 66251-2100

Date Mailed: 11/28/2006

DECISION GRANTING REQUEST TO CONVERT TO PROVISIONAL

This is a decision on the request under 37 CFR 1.53(c)(2) received in the U.S. Patent and Trademark Office on **11/21/2006,** to convert the above-identified application to a provisional application under 35 U.S.C. 111(b) and 37 CFR 1.53(c).

The request is granted.

The application will be processed in the Office of Initial Patent Examination (OIPE) as a provisional application under 35 U.S.C. 111(b) and 37 CFR 1.53(c), including the assignment of a new provisional application number.

The provisional application number is **60/853,306.** The filing receipt for the provisional application number will be mailed to the applicant by OIPE in due course.

JANICE L TIPPETT
Office of Initial Patent Examination
(571) 272-4000, or 1-800-PTO-9199, or 1-800-972-6382

PART 2 - OFFICE COPY

Copied from 11537328 on 08/15/2007

UNITED STATES PATENT AND TRADEMARK OFFICE

UNITED STATES DEPARTMENT OF COMMERCE
United States Patent and Trademark Office
Address: COMMISSIONER FOR PATENTS
P.O. Box 1450
Alexandria, Virginia 22313-1450
www.uspto.gov

APPLICATION NUMBER	FILING OR 371(c) DATE	FIRST NAMED APPLICANT	ATTY. DOCKET NO.
11/203,630	08/15/2005	Steve Anton Klein	

CONFIRMATION NO.

STEVE A. KLEIN
17040 OTSEGO ST.
ENCINO, CA 91316

Date Mailed: 06/19/2006

DECISION DISMISSING REQUEST UNDER 37 CFR 1.53(c)(2) TO CONVERT TO PROVISIONAL

This is a decision on the request under 37 CFR 1.53(c)(2) received in the U.S. Patent and Trademark Office on **03/16/2006,** to convert the above-identified application to a provisional application under 35 U.S.C. 111(b) and 37 CFR 1.53(c).

The request is dismissed because it does not comply with all the requirements of 37 CFR 1.53(c)(2).

A grantable request under 37 CFR 1.53(c)(2) to convert a non-provisional application to a provisional application must be accompanied by the processing fee set forth in 37CFR 1.17(q) and be filed prior to the earliest of: abandonment of the application filed under 37 CFR 1.53(b); payment of the issue fee on the application filed under 37 CFR 1.53(b); expiration of twelve months after the filing date of the application filed under 37 CFR 1.53 (b); or the filing of a request for a statutory invention registration under 37 CFR 1.293 in the application filed under 37 CFR 1.53(b). The present request is not grantable because:

It is not accompanied by the fee required by 37 CFR 1.17(q).

Any request for reconsideration of this decision must be filed within TWO MONTHS of the date of this decision. This time limit may NOT be extended pursuant to 37 CFR 1.136. The request must be accompanied by the items noted above.

Any inquiries related to this decision should be directed to Customer Service at (571) 272-4000, or 1-800-PTO-9199, or 1-800-972-6382.

A copy of this notice MUST be returned with the reply.

JOHN S DILL
Office of Initial Patent Examination

PART 2 - OFFICE COPY

Copied from 11203630 on 01/03/2007

UNITED STATES PATENT AND TRADEMARK OFFICE

UNITED STATES DEPARTMENT OF COMMERCE
United States Patent and Trademark Office
Address: COMMISSIONER FOR PATENTS
P.O. Box 1450
Alexandria, Virginia 22313-1450
www.uspto.gov

APPLICATION NUMBER	FILING OR 371(c) DATE	FIRST NAMED APPLICANT	ATTY. DOCKET NO.
~~29/265,751~~ 60853312	09/11/2006	Alfonzo Smith JR.	

CONFIRMATION NO.

Julia Vaden
4950 E. New York Ave.
P.O. Box 400994
Las Vegas, NV 89140

Date Mailed: 01/03/2007

DECISION GRANTING REQUEST TO CONVERT TO PROVISIONAL

This is a decision on the request under 37 CFR 1.53(c)(2) received in the U.S. Patent and Trademark Office on **11/07/2006,** to convert the above-identified application to a provisional application under 35 U.S.C. 111(b) and 37 CFR 1.53(c).

The request is granted.

The application will be processed in the Office of Initial Patent Examination (OIPE) as a provisional application under 35 U.S.C. 111(b) and 37 CFR 1.53(c), including the assignment of a new provisional application number.

The provisional application number is **60/853,312.** The filing receipt for the provisional application number will be mailed to the applicant by OIPE in due course.

JANICE L TIPPETT
Office of Initial Patent Examination
(571) 272-4000, or 1-800-PTO-9199, or 1-800-972-6382

PART 2 - OFFICE COPY

UNITED STATES PATENT AND TRADEMARK OFFICE

UNITED STATES DEPARTMENT OF COMMERCE
United States Patent and Trademark Office
Address: COMMISSIONER FOR PATENTS
P.O. Box 1450
Alexandria, Virginia 22313-1450
www.uspto.gov

APPLICATION NUMBER	FILING OR 371(c) DATE	FIRST NAMED APPLICANT	ATTY. DOCKET NO.
~~11/583,964~~	10/18/2006	Xin Zhou	34786-537

60,853313

CONFIRMATION NO.

64046
MINTZ, LEVIN, COHN, FERRIS, GLOVSKY AND POPEO, P.C
LA JOLLA CENTRE II
9255 TOWNE CENTRE DRIVE, SUITE 600
SAN DIEGO, CA 92121-3039

Date Mailed: 01/03/2007

DECISION GRANTING REQUEST TO CONVERT TO PROVISIONAL

This is a decision on the request under 37 CFR 1.53(c)(2) received in the U.S. Patent and Trademark Office on **11/24/2006**, to convert the above-identified application to a provisional application under 35 U.S.C. 111(b) and 37 CFR 1.53(c).

The request is granted.

The application will be processed in the Office of Initial Patent Examination (OIPE) as a provisional application under 35 U.S.C. 111(b) and 37 CFR 1.53(c), including the assignment of a new provisional application number.

The provisional application number is **60/853,313.** The filing receipt for the provisional application number will be mailed to the applicant by OIPE in due course.

JANICE L TIPPETT
Office of Initial Patent Examination
(571) 272-4000, or 1-800-PTO-9199, or 1-800-972-6382

PART 2 - OFFICE COPY

UNITED STATES PATENT AND TRADEMARK OFFICE

UNITED STATES DEPARTMENT OF COMMERCE
United States Patent and Trademark Office
Address: COMMISSIONER FOR PATENTS
P.O. Box 1450
Alexandria, Virginia 22313-1450
www.uspto.gov

APPLICATION NUMBER	FILING OR 371(c) DATE	FIRST NAMED APPLICANT	ATTY. DOCKET NO.
~~11/529,729~~ 60853314	09/29/2006	Karagada Ramarao Kishore	1778.2460000

CONFIRMATION NO.

56074
STERNE, KESSLER, GOLDSTEIN & FOX P.L.L.C.
1100 NEW YORK AVENUE, N.W.
WASHINGTON, DC 20005

Date Mailed: 01/04/2007

DECISION GRANTING REQUEST TO CONVERT TO PROVISIONAL

This is a decision on the request under 37 CFR 1.53(c)(2) received in the U.S. Patent and Trademark Office on **12/19/2006,** to convert the above-identified application to a provisional application under 35 U.S.C. 111(b) and 37 CFR 1.53(c).

The request is granted.

The application will be processed in the Office of Initial Patent Examination (OIPE) as a provisional application under 35 U.S.C. 111(b) and 37 CFR 1.53(c), including the assignment of a new provisional application number.

The provisional application number is **60/853,314.** The filing receipt for the provisional application number will be mailed to the applicant by OIPE in due course.

JANICE L TIPPETT
Office of Initial Patent Examination
(571) 272-4000, or 1-800-PTO-9199, or 1-800-972-6382

PART 2 - OFFICE COPY

BEST AVAILABLE COPY

UNITED STATES PATENT AND TRADEMARK OFFICE

UNITED STATES DEPARTMENT OF COMMERCE
United States Patent and Trademark Office
Address: COMMISSIONER FOR PATENTS
P.O. Box 1450
Alexandria, Virginia 22313-1450
www.uspto.gov

APPLICATION NUMBER	FILING OR 371(c) DATE	FIRST NAMED APPLICANT	ATTY. DOCKET NO.
~~11/580,038~~ 60853315	10/05/2006	Ross Purvine	

CONFIRMATION NO.

Ross Purvine
1648 1/4 Preuss Rd.
Los Angeles, CA 90035

Date Mailed: 01/05/2007

DECISION GRANTING REQUEST TO CONVERT TO PROVISIONAL

This is a decision on the request under 37 CFR 1.53(c)(2) received in the U.S. Patent and Trademark Office on **11/27/2006,** to convert the above-identified application to a provisional application under 35 U.S.C. 111(b) and 37 CFR 1.53(c).

The request is granted.

The application will be processed in the Office of Initial Patent Examination (OIPE) as a provisional application under 35 U.S.C. 111(b) and 37 CFR 1.53(c), including the assignment of a new provisional application number.

The provisional application number is **60/853,315.** The filing receipt for the provisional application number will be mailed to the applicant by OIPE in due course.

JANICE L TIPRETT
Office of Initial Patent Examination
(571) 272-4000, or 1-800-PTO-9199, or 1-800-972-6382

PART 2 - OFFICE COPY

UNITED STATES PATENT AND TRADEMARK OFFICE

UNITED STATES DEPARTMENT OF COMMERCE
United States Patent and Trademark Office
Address: COMMISSIONER FOR PATENTS
P.O. Box 1450
Alexandria, Virginia 22313-1450
www.uspto.gov

APPLICATION NUMBER	FILING OR 371(c) DATE	FIRST NAMED APPLICANT	ATTY. DOCKET NO.
11/535,341	09/26/2006	Gregory Schebece	

CONFIRMATION NO.

Gregory Schebece
15 Woodedge Drive
Dix Hills, NY 11746

Date Mailed: 11/13/2006

DECISION DISMISSING REQUEST UNDER 37 CFR 1.53(c)(2) TO CONVERT TO PROVISIONAL

This is a decision on the request under 37 CFR 1.53(c)(2) received in the U.S. Patent and Trademark Office on **10/24/2006,** to convert the above-identified application to a provisional application under 35 U.S.C. 111(b) and 37 CFR 1.53(c).

The request is dismissed because it does not comply with all the requirements of 37 CFR 1.53(c)(2).

A grantable request under 37 CFR 1.53(c)(2) to convert a non-provisional application to a provisional application must be accompanied by the processing fee set forth in 37CFR 1.17(q) and be filed prior to the earliest of: abandonment of the application filed under 37 CFR 1.53(b); payment of the issue fee on the application filed under 37 CFR 1.53(b); expiration of twelve months after the filing date of the application filed under 37 CFR 1.53 (b); or the filing of a request for a statutory invention registration under 37 CFR 1.293 in the application filed under 37 CFR 1.53(b). The present request is not grantable because:

It is not accompanied by the fee required by 37 CFR 1.17(q).

Any request for reconsideration of this decision must be filed within TWO MONTHS of the date of this decision. This time limit may NOT be extended pursuant to 37 CFR 1.136. The request must be accompanied by the items noted above.

Any inquiries related to this decision should be directed to Customer Service at (571) 272-4000, or 1-800-PTO-9199, or 1-800-972-6382.

A copy of this notice MUST be returned with the reply.

JANICE L. TIPPETT
Office of Initial Patent Examination

PART 2 - OFFICE COPY

Copied from 11535341 on 02/02/2007

UNITED STATES PATENT AND TRADEMARK OFFICE

Commissioner for Patents
United States Patent and Trademark Office
P.O. Box 1450
Alexandria, VA 22313-1450
www.uspto.gov

PSC SCANNING, INC. - STOEL RIVES LLP
C/O STOEL RIVES LLP
900 SW 5TH AVENUE
SUITE 2600
PORTLAND OR 97204

MAIL

JAN 0 5 2007

DIRECTOR OFFICE
TECHNOLOGY CENTER 2600

In re Application of:
STEINKE, KURT ELLIS, et al.
Serial No.: 11/139,234
Filed: May 27, 2005
For: **APPARATUS AND METHOD FOR SAVING POWER IN RFID READERS**

DECISION ON PETITION
TO CONVERT APPLICATION

This is a decision on the petition under 37 C.F.R. § 1.53(b)(2)(ii), filed December 22, 2005, to convert the above-identified application to a provisional application under 35 U.S.C. § 111(b) and 37 C.F.R. § 1.53(b)(2).

The petition is **GRANTED.**

The application is being returned to the Office of Initial Patent Examination (OIPE) for further processing as a PROVISIONAL application under 35 U.S.C. § 111(b) and 37 C.F.R. § 1.53(b)(2), including the assignment of a new provisional application number.

The new provisional application number will be communicated to the applicant by OIPE in due course.

Kenneth A. Wieder
Special Program Examiner
Technology Center 2600
Communications

Copied from 11139234 on 02/02/2007

UNITED STATES PATENT AND TRADEMARK OFFICE

Commissioner for Patents
United States Patent and Trademark Office
P.O. Box 1450
Alexandria, VA 22313-1450
www.uspto.gov

PSC SCANNING, INC. - STOEL RIVES LLP
C/O STOEL RIVES LLP
900 SW 5TH AVENUE
SUITE 2600
PORTLAND OR 97204

MAIL

JAN 05 2007
DIRECTOR OFFICE
TECHNOLOGY CENTER 2600

In re Application of:
STEINKE, KURT ELLIS
Serial No.: 11/155,141
Filed: June 16, 2005
For: **METHOD AND SYSTEM WITH FUNCTIONALITY FOR FINDING RANGE BETWEEN AN ELECTRONIC TAG READER AND TAG**

DECISION ON PETITION
TO CONVERT APPLICATION

This is a decision on the petition under 37 C.F.R. § 1.53(b)(2)(ii), filed December 22, 2005, to convert the above-identified application to a provisional application under 35 U.S.C. § 111(b) and 37 C.F.R. § 1.53(b)(2).

The petition is **GRANTED.**

The application is being returned to the Office of Initial Patent Examination (OIPE) for further processing as a PROVISIONAL application under 35 U.S.C. § 111(b) and 37 C.F.R. § 1.53(b)(2), including the assignment of a new provisional application number.

The new provisional application number will be communicated to the applicant by OIPE in due course.

Kenneth A. Wieder
Special Program Examiner
Technology Center 2600
Communications

Copied from 11155141 on 02/02/2007

UNITED STATES PATENT AND TRADEMARK OFFICE

UNITED STATES DEPARTMENT OF COMMERCE
United States Patent and Trademark Office
Address: COMMISSIONER FOR PATENTS
P.O. Box 1450
Alexandria, Virginia 22313-1450
www.uspto.gov

APPLICATION NUMBER	FILING OR 371(c) DATE	FIRST NAMED APPLICANT	ATTY. DOCKET NO.
~~11/306,910~~ 60853322	01/16/2006	Walter Blejde	201141.00109

CONFIRMATION NO.

21324
HAHN LOESER & PARKS, LLP
One GOJO Plaza
Suite 300
AKRON, OH 44311-1076

Date Mailed: 03/22/2007

DECISION GRANTING REQUEST TO CONVERT TO PROVISIONAL

This is a decision on the request under 37 CFR 1.53(c)(2) received in the U.S. Patent and Trademark Office on **08/07/2006,** to convert the above-identified application to a provisional application under 35 U.S.C. 111(b) and 37 CFR 1.53(c).

The request is granted.

The application will be processed in the Office of Initial Patent Examination (OIPE) as a provisional application under 35 U.S.C. 111(b) and 37 CFR 1.53(c), including the assignment of a new provisional application number.

The provisional application number is **60/853,322.** The filing receipt for the provisional application number will be mailed to the applicant by OIPE in due course.

JANICE L TIPPETT
Office of Initial Patent Examination
(571) 272-4000, or 1-800-PTO-9199

PART 2 - OFFICE COPY

UNITED STATES PATENT AND TRADEMARK OFFICE

Commissioner for Patents
United States Patent and Trademark Office
P.O. Box 1450
Alexandria, VA 22313-1450
www.uspto.gov

CST

1-11-07

In re application of Walter Blejde et al Serial No. 11/306,910 Filed: January 16, 2006 For: THIN CAST STEEL STRIP WITH REDUCED MICROCRACKING	:	DECISION ON PETITION

This is a decision on the PETITION TO CONVERT NONPROVISIONAL APPLICATION TO PROVISIONAL APPLICATION, filed August 7, 2006.

A review of the application record indicates that all of the requirements for converting the above-identified application to a provisional application under 37 CFR 1.53(c)(2) have been met.

The petition is **GRANTED.**

This application will be forwarded to the Office of Initial Patent Examination (OIPE) for conversion to a provisional application.

It is noted that an office action was mailed on August 30, 2006, after the petition to convert the above-identified application to a provisional application was filed. This office action will be vacated. No response to the office action of August 30, 2006 is required.

JMStone

Jacqueline M. Stone
Director, Technology Center 1700
High Polymer Chemistry, Plastics,
Stock Materials and Compositions

Copied from 11306910 on 04/03/2007

UNITED STATES PATENT AND TRADEMARK OFFICE

UNITED STATES DEPARTMENT OF COMMERCE
United States Patent and Trademark Office
Address: COMMISSIONER FOR PATENTS
P.O. Box 1450
Alexandria, Virginia 22313-1450
www.uspto.gov

APPLICATION NUMBER	FILING OR 371(c) DATE	FIRST NAMED APPLICANT	ATTY. DOCKET NO.
11/532,472	09/15/2006	Morgan Evans	1126

CONFIRMATION NO.

Mike Powell
1711 Barrie Road
Victoria, BC V8N 2W4

Date Mailed: 02/07/2007

DECISION GRANTING REQUEST TO CONVERT TO PROVISIONAL

This is a decision on the request under 37 CFR 1.53(c)(2) received in the U.S. Patent and Trademark Office on **09/27/2006,** to convert the above-identified application to a provisional application under 35 U.S.C. 111(b) and 37 CFR 1.53(c).

The request is granted.

The application will be processed in the Office of Initial Patent Examination (OIPE) as a provisional application under 35 U.S.C. 111(b) and 37 CFR 1.53(c), including the assignment of a new provisional application number.

The provisional application number is **60/853,323.** The filing receipt for the provisional application number will be mailed to the applicant by OIPE in due course.

JANICE L TIPPETT
Office of Initial Patent Examination
(571) 272-4000, or 1-800-PTO-9199, or 1-800-972-6382

PART 2 - OFFICE COPY

UNITED STATES PATENT AND TRADEMARK OFFICE

UNITED STATES DEPARTMENT OF COMMERCE
United States Patent and Trademark Office
Address: COMMISSIONER FOR PATENTS
P.O. Box 1450
Alexandria, Virginia 22313-1450
www.uspto.gov

APPLICATION NUMBER	FILING OR 371(c) DATE	FIRST NAMED APPLICANT	ATTY. DOCKET NO.
11/383,836	05/17/2006	Pierre Favrat	

CONFIRMATION NO.

Pierre Favrat
2221 Glenview Dr.
Milpitas, CA 95035

Date Mailed: 02/28/2007

DECISION GRANTING REQUEST TO CONVERT TO PROVISIONAL

This is a decision on the request under 37 CFR 1.53(c)(2) received in the U.S. Patent and Trademark Office on **05/30/2006,** to convert the above-identified application to a provisional application under 35 U.S.C. 111(b) and 37 CFR 1.53(c).

The request is granted.

The application will be processed in the Office of Initial Patent Examination (OIPE) as a provisional application under 35 U.S.C. 111(b) and 37 CFR 1.53(c), including the assignment of a new provisional application number.

The provisional application number is **60/853,324.** The filing receipt for the provisional application number will be mailed to the applicant by OIPE in due course.

JANICE L TIPPETT
Office of Initial Patent Examination
(571) 272-4000, or 1-800-PTO-9199, or 1-800-972-6382

PART 2 - OFFICE COPY

UNITED STATES PATENT AND TRADEMARK OFFICE

UNITED STATES DEPARTMENT OF COMMERCE
United States Patent and Trademark Office
Address: COMMISSIONER FOR PATENTS
P.O. Box 1450
Alexandria, Virginia 22313-1450
www.uspto.gov

APPLICATION NUMBER	FILING OR 371(c) DATE	FIRST NAMED APPLICANT	ATTY. DOCKET NO.
~~11/677,391~~ 60853327	02/21/2007	Madhuri Hegde	50508-8890

CONFIRMATION NO.

24504
THOMAS, KAYDEN, HORSTEMEYER & RISLEY, LLP
100 GALLERIA PARKWAY, NW
STE 1750
ATLANTA, GA 30339-5948

Date Mailed: 03/22/2007

DECISION GRANTING REQUEST TO CONVERT TO PROVISIONAL

This is a decision on the request under 37 CFR 1.53(c)(2) received in the U.S. Patent and Trademark Office on **02/28/2007,** to convert the above-identified application to a provisional application under 35 U.S.C. 111(b) and 37 CFR 1.53(c).

The request is granted.

The application will be processed in the Office of Initial Patent Examination (OIPE) as a provisional application under 35 U.S.C. 111(b) and 37 CFR 1.53(c), including the assignment of a new provisional application number.

The provisional application number is **60/853,327.** The filing receipt for the provisional application number will be mailed to the applicant by OIPE in due course.

JANICE L TIPPETT
Office of Initial Patent Examination
(571) 272-4000, or 1-800-PTO-9199

PART 2 - OFFICE COPY

UNITED STATES PATENT AND TRADEMARK OFFICE

UNITED STATES DEPARTMENT OF COMMERCE
United States Patent and Trademark Office
Address: COMMISSIONER FOR PATENTS
P.O. Box 1450
Alexandria, Virginia 22313-1450
www.uspto.gov

APPLICATION NUMBER	FILING OR 371(c) DATE	FIRST NAMED APPLICANT	ATTY. DOCKET NO.
~~11/631,432~~ 60853328	01/09/2007		

CONFIRMATION NO.

21586
VINSON & ELKINS, L.L.P.
1001 FANNIN STREET
2300 FIRST CITY TOWER
HOUSTON, TX 77002-6760

Date Mailed. 03/22/2007

DECISION GRANTING REQUEST TO CONVERT TO PROVISIONAL

This is a decision on the request under 37 CFR 1.53(c)(2) received in the U.S. Patent and Trademark Office on **03/06/2007,** to convert the above-identified application to a provisional application under 35 U.S.C. 111(b) and 37 CFR 1.53(c).

The request is granted.

The application will be processed in the Office of Initial Patent Examination (OIPE) as a provisional application under 35 U.S.C. 111(b) and 37 CFR 1.53(c), including the assignment of a new provisional application number.

The provisional application number is **60/853,328.** The filing receipt for the provisional application number will be mailed to the applicant by OIPE in due course.

JANICE L TIPPETT
Office of Initial Patent Examination
(571) 272-4000, or 1-800-PTO-9199

PART 2 - OFFICE COPY

UNITED STATES PATENT AND TRADEMARK OFFICE

Commissioner for Patents
United States Patent and Trademark Office
P.O. Box 1450
Alexandria, VA 22313-1450
www.uspto.gov

VINSON & ELKINS LLP
1001 FANNIN STREET
2300 FIRST CITY TOWER
HOUSTON TX 77002-6760

COPY MAILED

JAN 0 8 2008

OFFICE OF PETITIONS

In re Application of	:	
Sullivan, et al.	:	
Application No. 60/853,328	:	ON PETITION
Filed: January 9, 2007	:	
Attorney Docket No. MYS300/4-3US	:	

This is a decision on the petition to withdraw the holding of abandonment under 37 CFR 1.181, filed December 12, 2007.

The petition is **GRANTED**.

This application was held abandoned for failure to timely pay the statutory basic filing fee in response to the Notice to File Missing Parts of Provisional Application, mailed March 22, 2007. This Notice set an extendable period for reply of two (2) months. In addition, the Notice informed applicants that certain drawing figures were missing, and that the failure to file a petition with respect to these figures would be treated as constructive acceptance by applicants of the provisional application as deposited. No fee in response to the Notice having been received, the application became abandoned on May 23, 2007. A Notice of Abandonment was mailed on December 4, 2007.

Petitioner contends that the $200 statutory basic filing fee for a provisional application was deposited on March 6, 2007, at the time he filed a "REQUEST FOR CONVERSION TO PROVISIONAL APPLICATION". The request was granted in a decision mailed on March 22, 2007. Petitioner has included a Patent Electronic Filing Acknowledgment Receipt, showing that the Office received the $200 provisional application filing fee on March 6, 2007.[1] Based on the receipt, it is obvious that the Office applied the fee towards the now inactive nonprovisional application, no. 11/651,432.

In view thereof, **THE HOLDING OF ABANDONMENT IS WITHDRAWN.**

Lastly, it is noted that petitioner has not contested that the omitted drawing figures were in fact present. Accordingly, this is concluded to be a constructive acceptance by applicants of the provisional application as deposited.

Telephone inquiries regarding this decision should be directed to the undersigned at (571)272-3207.

Cliff Congo
Petitions Attorney
Office of Petitions

---

[1] A receipt which itemizes and properly identifies the items which are being filed serves as *prima facie* evidence of receipt in the Office of all items listed thereon on the date stamped thereon by the Office. See MPEP 503.

UNITED STATES PATENT AND TRADEMARK OFFICE

UNITED STATES DEPARTMENT OF COMMERCE
United States Patent and Trademark Office
Address: COMMISSIONER FOR PATENTS
P.O. Box 1450
Alexandria, Virginia 22313-1450
www.uspto.gov

APPLICATION NUMBER	FILING OR 371(c) DATE	FIRST NAMED APPLICANT	ATTY. DOCKET NO.
~~11/592,466~~ 60853329	11/03/2006	Inessa Gurevich	058653/03621

31013
KRAMER LEVIN NAFTALIS & FRANKEL LLP
INTELLECTUAL PROPERTY DEPARTMENT
1177 AVENUE OF THE AMERICAS
NEW YORK, NY 10036

CONFIRMATION NO.

Date Mailed: 03/22/2007

DECISION GRANTING REQUEST TO CONVERT TO PROVISIONAL

This is a decision on the request under 37 CFR 1.53(c)(2) received in the U.S. Patent and Trademark Office on **03/09/2007,** to convert the above-identified application to a provisional application under 35 U.S.C. 111(b) and 37 CFR 1.53(c).

The request is granted.

The application will be processed in the Office of Initial Patent Examination (OIPE) as a provisional application under 35 U.S.C. 111(b) and 37 CFR 1.53(c), including the assignment of a new provisional application number.

The provisional application number is **60/853,329.** The filing receipt for the provisional application number will be mailed to the applicant by OIPE in due course.

JANICE L TIPPETT
Office of Initial Patent Examination
(571) 272-4000, or 1-800-PTO-9199

PART 2 - OFFICE COPY

UNITED STATES PATENT AND TRADEMARK OFFICE

UNITED STATES DEPARTMENT OF COMMERCE
United States Patent and Trademark Office
Address: COMMISSIONER FOR PATENTS
P.O. Box 1450
Alexandria, Virginia 22313-1450
www.uspto.gov

APPLICATION NUMBER	FILING OR 371(c) DATE	FIRST NAMED APPLICANT	ATTY. DOCKET NO.
~~11/641,028~~ 60853330	12/19/2006	Wael William Diab	BU5752/BCOM.0100000

CONFIRMATION NO.

34611
LAW OFFICE OF DUANE S. KOBAYASHI
1325 MURRAY DOWNS WAY
RESTON, VA 20194

Date Mailed: 03/22/2007

DECISION GRANTING REQUEST TO CONVERT TO PROVISIONAL

This is a decision on the request under 37 CFR 1.53(c)(2) received in the U.S. Patent and Trademark Office on **03/12/2007,** to convert the above-identified application to a provisional application under 35 U.S.C. 111(b) and 37 CFR 1.53(c).

The request is granted.

The application will be processed in the Office of Initial Patent Examination (OIPE) as a provisional application under 35 U.S.C. 111(b) and 37 CFR 1.53(c), including the assignment of a new provisional application number.

The provisional application number is **60/853,330.** The filing receipt for the provisional application number will be mailed to the applicant by OIPE in due course.

JANICE L TIPPETT
Office of Initial Patent Examination
(571) 272-4000, or 1-800-PTO-9199

PART 2 - OFFICE COPY

UNITED STATES PATENT AND TRADEMARK OFFICE

UNITED STATES DEPARTMENT OF COMMERCE
United States Patent and Trademark Office
Address: COMMISSIONER FOR PATENTS
P.O. Box 1450
Alexandria, Virginia 22313-1450
www.uspto.gov

APPLICATION NUMBER	FILING OR 371(c) DATE	FIRST NAMED APPLICANT	ATTY. DOCKET NO.
~~10/655,704~~ 60853331	09/05/2003	Edward Allwein	40353.0005US01

CONFIRMATION NO.

MERCHANT & GOULD P.C.
P.O. Box 2903
Minneapolis, MN 55402-0903

Date Mailed: 04/04/2007

DECISION GRANTING REQUEST TO CONVERT TO PROVISIONAL

This is a decision on the request under 37 CFR 1.53(c)(2) received in the U.S. Patent and Trademark Office on **02/02/2004,** to convert the above-identified application to a provisional application under 35 U.S.C. 111(b) and 37 CFR 1.53(c).

The request is granted.

The application will be processed in the Office of Initial Patent Examination (OIPE) as a provisional application under 35 U.S.C. 111(b) and 37 CFR 1.53(c), including the assignment of a new provisional application number.

The provisional application number is **60/853,331.** The filing receipt for the provisional application number will be mailed to the applicant by OIPE in due course.

JANICE L TIPPETT
Office of Initial Patent Examination
(571) 272-4000, or 1-800-PTO-9199

PART 2 - OFFICE COPY

UNITED STATES PATENT AND TRADEMARK OFFICE

Commissioner for Patents
United States Patent and Trademark Office
P.O. Box 1450
Alexandria, VA 22313-1450
www.uspto.gov

MERCHANT & GOULD PC
PO BOX 2903
MINNEAPOLIS MN 55402-0903

COPY MAILED
DEC 17 2004
OFFICE OF PETITIONS

In re Application of	:	
Allwein, et al.	:	DECISION ON PETITION
Application No. 10/655,704	:	
Filed: September 5, 2003	:	
Attorney Docket No. 40353.0005US01	:	

This is a decision on the petition filed December 7, 2004, pursuant to 37 CFR 1.137(b), to revive the above-identified application.

The petition is **GRANTED**.

The above-identified application became abandoned for failure to timely reply to the Notice to File Missing Parts of Nonprovisional Application, mailed December 4, 2003. This Notice set a period for reply of two months from the mail date of the Notice to submit an executed oath or declaration (and a surcharge for its late filing). No extensions of time under the provisions of 37 CFR 1.136(a) were obtained. No reply having been received, the above-identified application became abandoned on February 5, 2004. A Notice of Abandonment was mailed on November 4, 2004.

Copied from 10655704 on 04/25/2007

With the instant petition, petitioner submitted a "REQUEST FOR CONVERSION FROM A NONPROVISIONAL APPLICATION TO A PROVISIONAL APPLICATION UNDER 37 C.F.R. § 1.53(c)(2)", together with the processing fee, paid the petition fee, and made the proper statement of unintentional delay.

The application file is being forwarded to the Office of Initial Patent Examination for processing of the "REQUEST FOR CONVERSION FROM A NONPROVISIONAL APPLICATION TO A PROVISIONAL APPLICATION UNDER 37 C.F.R. § 1.53(c)(2)".

Telephone inquiries related to this decision should be directed to the undersigned at (571)272-3207.

Cliff Congo
Petitions Attorney
Office of Petitions

Copied from 10655704 on 04/25/2007

UNITED STATES PATENT AND TRADEMARK OFFICE

UNITED STATES DEPARTMENT OF COMMERCE
United States Patent and Trademark Office
Address: COMMISSIONER FOR PATENTS
P.O. Box 1450
Alexandria, Virginia 22313-1450
www.uspto.gov

APPLICATION NUMBER	FILING OR 371(c) DATE	FIRST NAMED APPLICANT	ATTY. DOCKET NO.
10/655,704	09/05/2003	Edward Allwein	40353.0005US01

CONFIRMATION NO.

OC000000015826922

MERCHANT & GOULD P.C.
P.O. Box 2903
Minneapolis, MN 55402-0903

Date Mailed: 04/22/2005

DECISION DISMISSING REQUEST UNDER 37 CFR 1.53(c)(2) TO CONVERT TO PROVISIONAL

This is a decision on the request under 37 CFR 1.53(c)(2) received in the U.S. Patent and Trademark Office on **12/07/2004,** to convert the above-identified application to a provisional application under 35 U.S.C. 111(b) and 37 CFR 1.53(c).

The request is dismissed because it does not comply with all the requirements of 37 CFR 1.53(c)(2).

A grantable request under 37 CFR 1.53(c)(2) to convert a non-provisional application to a provisional application must be accompanied by the processing fee set forth in 37CFR 1.17(q) and be filed prior to the earliest of: abandonment of the application filed under 37 CFR 1.53(b); payment of the issue fee on the application filed under 37 CFR 1.53(b); expiration of twelve months after the filing date of the application filed under 37 CFR 1.53 (b); or the filing of a request for a statutory invention registration under 37 CFR 1.293 in the application filed under 37 CFR 1.53(b). The present request is not grantable because:

It was received after the expiration of twelve months after the filing date of the non-provisional application.

Any request for reconsideration of this decision must be filed within TWO MONTHS of the date of this decision. This time limit may NOT be extended pursuant to 37 CFR 1.136. The request must be accompanied by the items noted above.

Any inquiries related to this decision should be directed to Customer Service at (703) 308-1202.

A copy of this notice MUST be returned with the reply.

JOHN S DILL
Office of Initial Patent Examination

PART 2 - OFFICE COPY

Copied from 10655704 on 04/25/2007

UNITED STATES PATENT AND TRADEMARK OFFICE

Commissioner for Patents
United States Patent and Trademark Office
P.O. Box 1450
Alexandria, VA 22313-1450
www.uspto.gov

MERCHANT & GOULD PC
PO BOX 2903
MINNEAPOLIS MN 55402-0903

COPY MAILED
MAY 1 3 2005
OFFICE OF PETITIONS

In re Application of	:	
Allwein, et al.	:	CORRECTED DECISION
Application No. 10/655,704	:	
Filed: September 5, 2003	:	
Attorney Docket No. 40353.0005US01	:	

This is a corrected decision on the petition filed December 7, 2004, pursuant to 37 CFR 1.137(b), to revive the above-identified application.

The petition is **DISMISSED AS MOOT**.

The Notice of Abandonment mailed on November 4, 2004 was mailed in error and is hereby **WITHDRAWN**.

The above-identified application was held abandoned for failure to timely reply to the Notice to File Missing Parts of Nonprovisional Application, mailed December 4, 2003. This Notice set a period for reply of two months from the mail date of the Notice to submit an executed oath or declaration (and a surcharge for its late filing). No extensions of time under the provisions of 37 CFR 1.136(a) were obtained. No reply having been received, the above-identified application was held abandoned on February 5, 2004. A Notice of Abandonment was mailed on November 4, 2004.

Copied from 10655704 on 04/25/2007

With a 37 CFR 1.137(b) petition filed December 7, 2004, petitioner submitted a "REQUEST FOR CONVERSION FROM A NONPROVISIONAL APPLICATION TO A PROVISIONAL APPLICATION UNDER 37 C.F.R. § 1.53(c)(2)", together with the processing fee, paid the petition fee, and made the proper statement of unintentional delay.

A decision granting the petition was mailed on December 17, 2004. However, the decision was incorrect. Upon further review, applicant did submit a timely response to the Notice to File Missing Parts. Applicant submitted the "REQUEST FOR CONVERSION FROM A NONPROVISIONAL APPLICATION TO A PROVISIONAL APPLICATION UNDER 37 C.F.R. § 1.53(c)(2)" on February 2, 2004. It contained a typographical error in the application number, and was accordingly matched up with the wrong file. However, all the other identifying information submitted (applicant's name, filing date, attorney docket number, group art unit, and title of invention) was correct. In that situation, it is the policy of the Office to transfer the filing to the correct application file for which it was intended. See MPEP 724.05(III).

In view of the above, the decision mailed on December 17, 2004 is hereby **VACATED**.

In addition, the Decision Dismissing Request Under 37 CFR 1.53(c)(2) to Convert to Provisional is also hereby **VACATED**.

The "REQUEST FOR CONVERSION FROM A NONPROVISIONAL APPLICATION TO A PROVISIONAL APPLICATION UNDER 37 C.F.R. § 1.53(c)(2)" filed on February 2, 2004 in application no. 10/665,704 has been transferred to the instant application, application no. 10/655,704.

As the petition is dismissed as moot, the $1,370 petition fee is unnecessary. The fee has been refunded to Deposit Account No. 13-2725.

The application file is being returned to the Office of Initial Patent Examination for processing of the "REQUEST FOR CONVERSION FROM A NONPROVISIONAL APPLICATION TO A PROVISIONAL APPLICATION UNDER 37 C.F.R. § 1.53(c)(2)", filed February 2, 2004.

Telephone inquiries related to this decision should be directed to the undersigned at (571)272-3207.

Cliff Congo
Petitions Attorney
Office of Petitions

Copied from 10655704 on 04/25/2007

UNITED STATES PATENT AND TRADEMARK OFFICE

UNITED STATES DEPARTMENT OF COMMERCE
United States Patent and Trademark Office
Address: COMMISSIONER FOR PATENTS
P.O. Box 1450
Alexandria, Virginia 22313-1450
www.uspto.gov

APPLICATION NUMBER	FILING OR 371(c) DATE	FIRST NAMED APPLICANT	ATTY. DOCKET NO.
~~10/783,271~~ 60853332	02/20/2004	Yixin Wang	VDX-5003 USNP

CONFIRMATION NO.

27777
PHILIP S. JOHNSON
JOHNSON & JOHNSON
ONE JOHNSON & JOHNSON PLAZA
NEW BRUNSWICK, NJ 08933-7003

Date Mailed: 04/04/2007

DECISION GRANTING REQUEST TO CONVERT TO PROVISIONAL

This is a decision on the request under 37 CFR 1.53(c)(2) received in the U.S. Patent and Trademark Office on **12/08/2004,** to convert the above-identified application to a provisional application under 35 U.S.C. 111(b) and 37 CFR 1.53(c).

The request is granted.

The application will be processed in the Office of Initial Patent Examination (OIPE) as a provisional application under 35 U.S.C. 111(b) and 37 CFR 1.53(c), including the assignment of a new provisional application number.

The provisional application number is **60/853,332.** The filing receipt for the provisional application number will be mailed to the applicant by OIPE in due course.

JANICE L TIPPETT
Office of Initial Patent Examination
(571) 272-4000, or 1-800-PTO-9199

PART 2 - OFFICE COPY

UNITED STATES PATENT AND TRADEMARK OFFICE

Commissioner for Patents
United States Patent and Trademark Office
P.O. Box 1450
Alexandria, VA 22313-1450
www.uspto.gov

MAR 25 2005

PHILIP S. JOHNSON
JOHNSON & JOHNSON
ONE JOHNSON & JOHNSON PLAZA
NEW BRUNSWICK NJ 08933-7003

In re Application of	:
Yixin Wang	:
Serial No.: 10/783,271	: CONVERSION TO PROVISIONAL
Filed: February 20, 2004	:
Attorney Docket No.: VDX-5003 USNP	:

This is in response to applicant's request, filed December 8, 2004, to convert this application to a provisional application. The $50.00 petition fee as required by 37 CFR 1.17(q) was charged to applicant's Deposit Account No. 10-0750, as directed.

The petition is **GRANTED**.

Should there be any questions with regard to this letter please contact Marianne C. Seidel by letter addressed to the Director, Technology Center 1600, PO BOX 1450, ALEXANDRIA, VA 22313-1450, or by telephone at 571-272-0584 or by facsimile transmission at Office facsimile number, 703-872-9306.

Marianne C. Seidel

Marianne C. Seidel
Special Program Examiner
Technology Center 1600

Copied from 10783271 on 04/25/2007

UNITED STATES PATENT AND TRADEMARK OFFICE

UNITED STATES DEPARTMENT OF COMMERCE
United States Patent and Trademark Office
Address: COMMISSIONER FOR PATENTS
P.O. Box 1450
Alexandria, Virginia 22313-1450
www.uspto.gov

APPLICATION NUMBER	FILING OR 371(c) DATE	FIRST NAMED APPLICANT	ATTY. DOCKET NO.
~~11/265,711~~ 60853333	11/02/2005	Robert J. Gyurik	51950-13

CONFIRMATION NO.

Raymond E. Stauffer, Esq.,
c/o Carella, Byrne, Bain, Gilfllan,
Cecchi, Stewart & Olstein
5 Becker Farm Road
Roseland, NJ 07068

Date Mailed: 04/04/2007

DECISION GRANTING REQUEST TO CONVERT TO PROVISIONAL

This is a decision on the request under 37 CFR 1.53(c)(2) received in the U.S. Patent and Trademark Office on **10/30/2006,** to convert the above-identified application to a provisional application under 35 U.S.C. 111(b) and 37 CFR 1.53(c).

The request is granted.

The application will be processed in the Office of Initial Patent Examination (OIPE) as a provisional application under 35 U.S.C. 111(b) and 37 CFR 1.53(c), including the assignment of a new provisional application number.

The provisional application number is **60/853,333.** The filing receipt for the provisional application number will be mailed to the applicant by OIPE in due course.

JANICE L TIPPETT
Office of Initial Patent Examination
(571) 272-4000, or 1-800-PTO-9199

PART 2 - OFFICE COPY

UNITED STATES PATENT AND TRADEMARK OFFICE

FEB 15 2007

Commissioner for Patents
United States Patent and Trademark Office
P.O. Box 1450
Alexandria, VA 22313-1450
www.uspto.gov

MANELLI DENISON & SELTER
2000 M STREET NW SUITE 700
WASHINGTON DC 20036-3307

In re Application of	:
Liren Huang et al	:
Serial No.: 11/320,755	: CONVERSION TO PROVISIONAL
Filed: December 30, 2005	:
Attorney Docket No.: 069748-1000	:

This is in response to applicants' request, filed December 22, 2006, to convert this application to a provisional application

The petition is **GRANTED**.

Should there be any questions with regard to this letter please contact William R. Dixon, Jr. by letter addressed to the Director, Technology Center 1600, PO BOX 1450, ALEXANDRIA, VA 22313-1450, or by telephone at 571-272-0519 or by facsimile transmission at Office facsimile number, 571-273-8300.

William R. Dixon, Jr.
Special Program Examiner
Technology Center 1600

Copied from 11320755 on 06/26/2007

UNITED STATES PATENT AND TRADEMARK OFFICE

UNITED STATES DEPARTMENT OF COMMERCE
United States Patent and Trademark Office
Address: COMMISSIONER FOR PATENTS
P.O. Box 1450
Alexandria, Virginia 22313-1450
www.uspto.gov

APPLICATION NUMBER	FILING OR 371(c) DATE	FIRST NAMED APPLICANT	ATTY. DOCKET NO.
11/320,755	12/30/2005	Liren Huang	069748-1000

CONFIRMATION NO.

22428
FOLEY AND LARDNER LLP
SUITE 500
3000 K STREET NW
WASHINGTON, DC 20007

Date Mailed: 04/04/2007

DECISION GRANTING REQUEST TO CONVERT TO PROVISIONAL

This is a decision on the request under 37 CFR 1.53(c)(2) received in the U.S. Patent and Trademark Office on **12/22/2006,** to convert the above-identified application to a provisional application under 35 U.S.C. 111(b) and 37 CFR 1.53(c).

The request is granted.

The application will be processed in the Office of Initial Patent Examination (OIPE) as a provisional application under 35 U.S.C. 111(b) and 37 CFR 1.53(c), including the assignment of a new provisional application number.

The provisional application number is **60/853,334.** The filing receipt for the provisional application number will be mailed to the applicant by OIPE in due course.

JANICE L. TIPPETT
Office of Initial Patent Examination
(571) 272-4000, or 1-800-PTO-9199

PART 2 - OFFICE COPY

Copied from 11320755 on 06/29/2007

UNITED STATES PATENT AND TRADEMARK OFFICE

UNITED STATES DEPARTMENT OF COMMERCE
United States Patent and Trademark Office
Address: COMMISSIONER FOR PATENTS
P.O. Box 1450
Alexandria, Virginia 22313-1450
www.uspto.gov

APPLICATION NUMBER	FILING OR 371(c) DATE	FIRST NAMED APPLICANT	ATTY. DOCKET NO
~~11/420,909~~ 60853335	05/30/2006	Robin R. Slaton	2417-742PROV

CONFIRMATION NO.

22442
SHERIDAN ROSS PC
1560 BROADWAY
SUITE 1200
DENVER, CO 80202

Date Mailed: 04/04/2007

DECISION GRANTING REQUEST TO CONVERT TO PROVISIONAL

This is a decision on the request under 37 CFR 1.53(c)(2) received in the U.S. Patent and Trademark Office on **07/28/2006,** to convert the above-identified application to a provisional application under 35 U.S.C. 111(b) and 37 CFR 1.53(c).

The request is granted.

The application will be processed in the Office of Initial Patent Examination (OIPE) as a provisional application under 35 U.S.C. 111(b) and 37 CFR 1.53(c), including the assignment of a new provisional application number.

The provisional application number is **60/853,335.** The filing receipt for the provisional application number will be mailed to the applicant by OIPE in due course.

JANICE L TIPPETT
Office of Initial Patent Examination
(571) 272-4000, or 1-800-PTO-9199

PART 2 - OFFICE COPY

UNITED STATES PATENT AND TRADEMARK OFFICE

Commissioner for Patents
United States Patent and Trademark Office
P.O. Box 1450
Alexandria, VA 22313-1450
www.uspto.gov
DIW Feb-07

NIXON PEABODY, LLP
401 9TH STREET, NW
SUITE 900
WASHINGTON DC 20004-2128

COPY MAILED

FEB 21 2007

OFFICE OF PETITIONS

In re Application of	:	
Guerra et al.	:	
Application No. 60/853,779	:	ON PETITION
Filed: 24 October, 2006	:	
Atty Docket No. 022331-26	:	

This is a decision on the petition filed on 30 November, 2006, requesting that the above-identified provisional application, without drawings, be accorded a filing date of 24 October, 2006.

The petition is **GRANTED**.

The application was filed on 24 October, 2006, without drawings. Accordingly, on 15 November, 2006, Initial Patent Examination Division mailed a "Notice of Incomplete Provisional Application" stating that the application had not been accorded a filing date because the application had been deposited without drawings.

On 30 November, 2006, the present petition was filed. Petitioners argue that "drawing Figures 1-11 are not necessary under 35 U.S.C. 113 (first sentence) because the added subject matter sought to be patented is found in newly added Appendix 9," and request that the application be accorded a filing date of 24 October, 2006.

As stated in MPEP § 601.01(f), it is the practice of the PTO to treat a provisional application that contains at least some disclosure of a process or method as an application for which a drawing is not necessary for an understanding of the invention under 35 U.S.C. 113 (first sentence).

MPEP § 601.01(f) also states that:

Application No. 60/853,779

> A nonprovisional application having at least one claim, or a provisional application having at least some disclosure, directed to the subject matter discussed above for which a drawing is usually not considered essential for a filing date, describing drawing figure(s) in the specification, but filed without drawings will be treated as an application filed without all of the drawing figures referred to in the specification as discussed in MPEP § 601.01(g), so long as the application contains something that can be construed as a written description and the names of all the inventors.

It is noted that Appendix 9 is part of the application papers present on filing on 24 October, 2006.

The arguments in the petition will be construed to mean that petitioner's counsel is asserting that drawings are not necessary for a filing date in this application. Drawings will not be further considered as a part of this case.

In view of the above, the "Notice" mailed 15 November, 2006, was mailed in error and is hereby withdrawn.

The application is accorded a filing date of 24 October, 2006, without drawings as a part of the original disclosure. The petition fee will be credited to counsel's deposit account.

The application is being referred to the Office of Initial Patent Examination for correction of the filing date to 24 October, 2006.

Telephone inquiries specific to this matter should be directed to the undersigned at 571 272-3231.

D Wood

Douglas I. Wood
Senior Petitions Attorney
Office of Petitions

UNITED STATES PATENT AND TRADEMARK OFFICE

Commissioner for Patents
United States Patent and Trademark Office
P.O. Box 1450
Alexandria, VA 22313-1450
www.uspto.gov

OSHA LIANG L.L.P.
1221 MCKINNEY STREET
SUITE 2800
HOUSTON TX 77010

COPY MAILED

FEB 20 2008

In re Application of	:	
Menning	:	
Application No. 60/854,144	:	DECISION
Filed: 25 October, 2006	:	
Attorney Docket No. 02468/016001	:	

This is a decision on the petition under 37 C.F.R. §1.10, filed on 20 November, 2006, seeking for the above-identified application a filing date of 25 October, 2006, rather than the presently accorded filing date of 24 October, 2006.

The petition is **GRANTED**.

BACKGROUND AND ANALYSIS

The instant application was received by the Office and subsequently accorded a filing date of 24 October, 2006.

The record reflects that:

- the instant application, averred to have been transmitted the package bearing US Postal Service (USPS) Express Mail Label No. EV975159515US, was received by the Office on 26 October, 2006, and subsequently given a filing date of 24 October, 2006;

- with the instant petition, filed on 20 November, 2006, Petitioner provided, *inter alia*, a copy of the USPS Express Mail label bearing USPS Express Mail Label No. EV975159515US with the hand-written "date in" of "0/24/06," however, Petitioner avers that this data is incorrect, and directs the attention of the Office to the date stamp on the

face of the label, which bears the date imprint of "OCT 25 2006" (and the identification thereon of the USPS post office as "TWO HOUSTON CTR"), which Petitioner contends is the accurate date in. A review by the Office of the USPS (online) Track and Confirm record bearing USPS Express Mail Label No. EV975159515US, and reflects "Processed, October 25, 2006, 6:11 pm, HOUSTON, TX 77205."

The availability of applications and application papers online to applicants/practitioners who diligently associate their Customer Number with the respective application(s) now provides an applicant/practitioner on-demand information as to events/transactions in an application. Thus, now if one wishes to know the progress in and/or status of an application or the accuracy of the data therein, one need only look at the file online.

Out of an abundance of caution, Petitioners always are reminded that the filing of a petition under 37 C.F.R. §1.181 does not toll any periods that may be running any action by the Office and a petition seeking relief under the regulation must be filed within two (2) months of the act complained of (see: 37 C.F.R. §1.181(f)), and that those registered to practice and all others who make representations before the Office are reminded to inquire into the underlying facts of representations made to the Office and support averments with the appropriate documentation–since all owe to the Office the continuing duty to disclose.[1]

The petition is **granted**, and, although the error may not have been that of the Office and the petition fee is waived.

The instant file is released to OIPE to correct the filing date so as to accord to the instant application a filing date of 25 October, 2006, and to mail to Petitioner a corrected filing receipt reflecting a filing date of 25 October, 2006.

---

[1] See supplement of 17 June, 1999. The Patent and Trademark Office is relying on petitioner's duty of candor and good faith and accepting a statement made by Petitioner. See Changes to Patent Practice and Procedure, 62 Fed. Reg. at 53160 and 53178, 1203 Off. Gaz. Pat. Office at 88 and 103 (responses to comments 64 and 109)(applicant obligated under 37 C.F.R. §10.18 to inquire into the underlying facts and circumstances when providing statements to the Patent and Trademark Office).

See specifically, the regulations at 37 C.F.R. §10.18.

While telephone inquiries regarding this decision may be directed to the undersigned at (571) 272-3214, it is noted that all practice before the Office is in writing (see: 37 C.F.R. §1.2[2]) and the proper authority for action on any matter in this regard are the statutes (35 U.S.C.), regulations (37 C.F.R.) and the commentary on policy (MPEP). Therefore, no telephone discussion may be controlling or considered authority for Petitioner's action(s).

John J. Gillon, Jr.
Senior Attorney
Office of Petitions

---

[2] The regulations at 37 C.F.R. §1.2 provide:

§1.2 Business to be transacted in writing.

All business with the Patent and Trademark Office should be transacted in writing. The personal attendance of applicants or their attorneys or agents at the Patent and Trademark Office is unnecessary. The action of the Patent and Trademark Office will be based exclusively on the written record in the Office. No attention will be paid to any alleged oral promise, stipulation, or understanding in relation to which there is disagreement or doubt.

60/854,144

Gillon, John

From: U.S._Postal_Service_ [U.S._Postal_Service@usps.com]
Sent: Sunday, February 10, 2008 5:36 PM
To: Gillon, John
Subject: U.S. Postal Service Track & Confirm email Restoration - EV97 5159 515U S

This is a post-only message. Please do not respond.

John Gillon has requested that you receive this restoration information for Track & Confirm as listed below.

Current Track & Confirm e-mail information provided by the U.S. Postal Service.

Label Number: EV97 5159 515U S

Service Type: Express Mail - Post Office to Addressee

Shipment Activity	Location	Date & Time
Delivered	ALEXANDRIA VA 22313	10/26/06 9:56am
Arrival at Unit	DULLES VA 20102	10/26/06 8:32am
Processed	HOUSTON TX 77205	10/25/06 6:11pm
International Dispatch	UNITED STATES	10/25/06 10:04am
Processed	JAMAICA NY 11499	10/25/06 9:27am
Processed	BALTIMORE MD 21240	10/24/06 6:10pm
Processed	HYATTSVILLE MD 20782	10/24/06 5:20pm
Acceptance	COLLEGE PARK MD 20740	10/24/06 2:30pm

USPS has not verified the validity of any email addresses submitted via its online Track & Confirm tool.

For more information, or if you have additional questions on Track &

UNITED STATES PATENT AND TRADEMARK OFFICE

Commissioner for Patents
United States Patent and Trademark Office
P.O. Box 1450
Alexandria, VA 22313-1450
www.uspto.gov

BAKER BOTTS L.L.P.
30 ROCKEFELLER PLAZA
44TH FLOOR
NEW YORK NY 10112-4498

COPY MAILED

SEP 28 2007

OFFICE OF PETITIONS

In re Application of :
HERNANDEZ et al. :
Application No. 60/854,241 : ON PETITION
Filed: October 25, 2006 :
Attorney Docket No. 065855.0411 :

This is a decision on the petition filed on August 29, 2007, requesting that the above-identified application be accorded a filing date of October 25, 2006, instead of the present filing date of December 19, 2006.

On October 25, 2006, applicants deposited the above-identified application. However, on November 3, 3006, the Office of Initial Patent Examination mailed a "Notice Of Incomplete Provisional Application," requiring drawings of applicants' invention and stating that the filing date would be the date of receipt of the omitted drawings.

On December 19, 2006, applicants submitted, *inter alia*, a "RESPONSE TO NOTICE OF INCOMPLETE PROVISIONAL APPLICATION," a $400.00 petition fee, 6 sheets of drawings, and a return, date-stamped postcard receipt. The postcard receipt acknowledged receipt of "Figures 1-6 (6pgs))" in the USPTO on October 25, 2006. Thereafter, the Office accorded the above-identified application a filing date of December 19, 2006; the date applicants submitted the drawings.

On August 29, 2007, applicants filed the present petition, requesting that the above-identified application be accorded a filing date of October 25, 2006, instead of the present filing date of December 19, 2006.

Upon review of the record, the 6 sheets of drawings, deposited on October 25, 2006, have not been located among the application papers. However, the evidence is convincing that the application papers deposited on October 25, 2006, included 6 sheets of drawings, which were subsequently misplaced in the United States Patent and Trademark Office. Therefore, the application, including the Figures 1-6, was complete on filing and will be granted a filing date of October 25, 2006.

Accordingly, the petition is granted.

The Notice of Incomplete Provisional Application was sent in error and is hereby withdrawn. Moreover, the Office erroneously accorded the application a filing date of December 19, 2006. As no petition fee is necessary, the Office will refund $400.00 to the Deposit Account.

The Office of Initial Patent Examination is directed to correct the filing date to October 25, 2006, using the application papers submitted on that date, and the 6 sheets of drawings (Figures 1-6) submitted on December 19, 2006. Additionally, the Office is directed to mail applicants a corrected filing receipt.

Any inquiries related to this decision should be directed to the undersigned at (571) 272-3211.

Christina T. Donnell

Christina Tartera Donnell
Senior Petitions Attorney
Office of Petitions

UNITED STATES PATENT AND TRADEMARK OFFICE

Commissioner for Patents
United States Patent and Trademark Office
P.O. Box 1450
Alexandria, VA 22313-1450
www.uspto.gov

ELIZABETH J. ESCHBACH
SUITE 410
601 SOUTH HOWES STREET
FORT COLLINS CO 80521

MAILED

MAR 30 2009

OFFICE OF PETITIONS

In re Application of	:	
Jie R. LUO	:	
Application No. 60/854,867	:	DECISION DISMISSING
Filed: October 30, 2006	:	PETITION UNDER 37 CFR 1.10(c)
Attorney Docket No. CSU-07-010	:	

This is a decision on the petition filed September 10, 2007, which is properly treated as a petition under 37 CFR 1.10(c) requesting that the above-identified application be considered as filed on October 25, 2006, which is the "date-in" or other official USPS notation on the Express Mail Mailing Label, instead of the currently accorded filing date of October 30, 2006.

The petition is **DISMISSED**.

Any request for reconsideration of this decision should be filed within **TWO MONTHS** of the date of this decision in order to be considered timely (see 37 CFR 1.181(f)). No extensions of time pursuant to the provisions of 37 CFR 1.136 are permitted. If reconsideration is not requested within the time period specified above, this application will be referred to the Office of Patent Application Processing with the presently accorded filing date of October 30, 2006.

37 CFR 1.10(c) sets forth procedures for filing a petition to the Director for a filing date as of the date of deposit with the USPS, where there is a discrepancy between the filing date initially accorded by the Office and the "date in" entered by the USPS or other official USPS notation.

To be grantable, a petition must:

(1) be filed promptly after the person becomes aware that the Office has accorded, or will accord, a filing date other than the USPS deposit date;

(2) include a showing that the number of the "Express Mail" mailing label was placed on each piece of correspondence prior to the original mailing; and

(3) include a true copy of the "Express Mail" mailing label showing the "date in" or other official notation by the USPS.

This petition lacks item (2) above.

Petitioner requests the filing date of October 25, 2006 on the basis that there is a discrepancy between the filing date the USPTO has currently accorded this application and the "date-in" or other official USPS notation on the "Express Mail" mailing label.

There is no indication that the person signing the petition was ever given a power of attorney to prosecute the application. If the person signing the petition desires to receive future correspondence regarding this application, the appropriate power of attorney documents must be submitted. While a courtesy copy of this decision is being mailed to the person signing the petition, all future correspondence will be directed to the address currently of record until appropriate instructions are received.

Further correspondence with respect to this matter should be addressed as follows:

By Mail: Mail Stop PETITION
Commissioner for Patents
P. O. Box 1450
Alexandria, VA 22313-1450

By facsimile: (571) 273-8300
Attn: Office of Petitions

By hand: U. S. Patent and Trademark Office
Customer Service Window, Mail Stop Petitions
Randolph Building
401 Dulany Street
Alexandria, VA 22314

Telephone inquiries concerning this matter may be directed to Tredelle Jackson at (571) 272-2783.

David Buccei
Petitions Examiner
Office of Petitions

cc: **LATHROP & GAGE LLP**
4845 PEARL EAST CIRCLE
SUITE 300
BOULDER, CO 80301

UNITED STATES PATENT AND TRADEMARK OFFICE

Commissioner for Patents
United States Patent and Trademark Office
P.O. Box 1450
Alexandria, VA 22313-1450
www.uspto.gov
DIW Mar-10

ELIZABETH J. ESCHBACH
SUITE 410
601 SOUTH HOWES STREET
FORT COLLINS CO 80521

MAILED

MAR 18 2010

OFFICE OF PETITIONS

In re Application of Jie R. Luo Application Number: 60/854867 Filed: 10/25/2006 Attorney Docket Number: CSU-07-010	DECISION GRANTING PETITION

This is a decision in reference to the renewed petition filed on June 1, 2009, under 37 CFR 1.10(c), requesting that the above-identified application be accorded a filing date of October 25, 2006, rather than the currently-accorded filing date of October 30, 2006.

The petition is **granted**.

Petitioners assert that the application was deposited in Express Mail Service on October 26, 2006. In support, petitioners have provided a copy of the Express Mail Customer Label EU966175979US. (the same Express Mail number found on the itemized provisional application for patent cover sheet accompanying the original application papers located in the official file, and the first page of the specification) showing a "date-in" of "10 25 06".

Upon further review, it is noted that the provisional application cover sheet and the specification as filed lists the Express Mail Label number as "EU966175979" but omits the suffix "US".

Nevertheless, it is concluded, there is sufficient information to link the Express Mail number on the Express Mail Customer Label to the application papers received in the Official file. **Petitioners are cautioned, however, that the entire Express Mail label number should be included on the application papers in future filings**.

As such, the showing of record is that the correct date of deposit in Express Mail is October 25, 2006.

In view of the above, the petition is granted. No fee is required and none has been charged.

The address in the subject petition is different than the correspondence address. A courtesy copy of this decision is being mailed to the address in the petition. All future correspondence, however, will be mailed solely to the address of record. A change of correspondence address should be filed if the correspondence address needs to be updated.

The application is being referred to the Office of Patent Application Processing (OPAP) for correction of the filing date to October 25, 2006, and for issuance of a corrected Filing Receipt.

Telephone inquiries related to this decision should be directed to the undersigned at 571-272-3231.

D Wood

Douglas I. Wood
Senior Petitions Attorney
Office of Petitions

cc:

LATHROP & GAGE LLP
4845 PEARL EAST CIRCLE, SUITE 201
BOULDER CO 80301

UNITED STATES PATENT AND TRADEMARK OFFICE

Commissioner for Patents
United States Patent and Trademark Office
P.O. Box 1450
Alexandria, VA 22313-1450
www.uspto.gov

COPY MAILED

FEB 23 2007

OFFICE OF PETITIONS

WOLF GREENFIELD & SACKS, PC
FEDERAL RESERVE PLAZA
600 ATLANTIC AVENUE
BOSTON MA 02210-2206

In re Application of
Pascal Gereard Merchiers et al.
Application No. 60/855,001
Filed: October 27, 2006
Attorney Docket No. **A0848.70035US00**

: DECISION GRANTING
: PETITION

This is a decision on the petition, filed January 22 2007, which is being treated under 37 CFR 1.53, requesting that the above-identified application be accorded a filing date of October 27, 2006.

The application was filed on October 27, 2006 without drawings.[1] Accordingly, on November 15, 2006, the Office of Initial Patent Examination mailed a "Notice of Incomplete Nonprovisional Application" stating that no filing date had been assigned because the application was deposited without drawings, and requiring drawings be filed if necessary.

In response, the present petition was filed. The petition states that the drawings are not necessary for an understanding of the subject matter sought to be patented Petitioners request that the application, without drawings, be accorded a filing date of October 27, 2006.

It has been PTO practice to treat an application that contains at least one process or method claim as an application for which a drawing is not necessary for an understanding of the invention under 35 U.S.C. 113 (first sentence).[2] Since the application was filed with at least one claim directed to a process or method, the application should have been treated as an application for which a drawing is not necessary and the Office of Initial Patent Examination should have mailed a "Notice Of Omitted Item(s)." See MPEP § 601.01(f).

---

[1] 35 U.S.C. § 113 (first sentence) requires a drawing "where necessary for the understanding of the subject matter sought to be patented."

[2] MPEP 601.01(f).

In view of the above, the Notice mailed November 15, 2006, is hereby withdrawn. The application is accorded a filing date of October 27, 2006 without drawings.

The petition is **GRANTED**. In view thereof, no petition fee is due and petitioner's deposit account no. 23-2825 will be credited in the amount of $400.00.

The application is being forwarded to the Office of Initial Patent Examination for further processing with a filing date of October 27, 2006, and for an indication on the bib-data sheet that no sheets of drawings were present on filing.

Telephone inquiries specific to this matter should be directed to the undersigned Petitions Attorney at (571) 272-3212.

Patricia Faison-Ball

Patricia Faison-Ball
Senior Petitions Attorney
Office of Petitions

UNITED STATES PATENT AND TRADEMARK OFFICE

Commissioner for Patents
United States Patent and Trademark Office
P.O. Box 1450
Alexandria, VA 22313-1450
www.uspto.gov

ROHM AND HAAS COMPANY
PATENT DEPARTMENT
100 INDEPENDENCE MALL WEST
PHILADELPHIA PA 19106-2399

COPY MAILED

JUN 11 2007

OFFICE OF PETITIONS

In re Application of	:	
Carpenter et al.	:	
Application No. 60/855,350	:	DECISION ON PETITION
Filed: October 30, 2006	:	
Attorney Docket No. A01857	:	

This is a decision on the petition under 37 CFR 1.182, filed, February 5, 2007 to change the name of inventor "Kent Carpenter" to – James Kent Carpenter --.

The petition is **GRANTED**.

Pursuant to petitioner's request, deposit account 18-1850 will be charged the $400.00 petition fee.

Office records have been updated to reflect the inventor's change of name. A corrected Filing Receipt, which reflects the inventor's change of name, accompanies this decision on petition.

Any questions concerning this matter may be directed to the undersigned at (571) 272-3215.

This application is being referred to the Office of Initial Patent Examination.

Charlema R. Grant

Charlema Grant
Petitions Attorney
Office of Petitions

ATTACHMENT: Corrected Filing Receipt

UNITED STATES PATENT AND TRADEMARK OFFICE

UNITED STATES DEPARTMENT OF COMMERCE
United States Patent and Trademark Office
Address: COMMISSIONER FOR PATENTS
P.O. Box 1450
Alexandria, Virginia 22313-1450
www.uspto.gov

APPL NO.	FILING OR 371(c) DATE	ART UNIT	FIL FEE REC'D	ATTY.DOCKET NO	TOT CLMS	IND CLMS
60/855,350	10/30/2006		200	A01857		

CONFIRMATION NO. 4422
CORRECTED FILING RECEIPT
OC000000024304065
OC000000024304065

21898
ROHM AND HAAS COMPANY
PATENT DEPARTMENT
100 INDEPENDENCE MALL WEST
PHILADELPHIA, PA 19106-2399

Date Mailed: 06/11/2007

Receipt is acknowledged of this provisional Patent Application. It will not be examined for patentability and will become abandoned not later than twelve months after its filing date. Be sure to provide the U.S. APPLICATION NUMBER, FILING DATE, NAME OF APPLICANT, and TITLE OF INVENTION when inquiring about this application. Fees transmitted by check or draft are subject to collection. Please verify the accuracy of the data presented on this receipt. **If an error is noted on this Filing Receipt, please mail to the Commissioner for Patents P.O. Box 1450 Alexandria Va 22313-1450. Please provide a copy of this Filing Receipt with the changes noted thereon. If you received a "Notice to File Missing Parts" for this application, please submit any corrections to this Filing Receipt with your reply to the Notice. When the USPTO processes the reply to the Notice, the USPTO will generate another Filing Receipt incorporating the requested corrections (if appropriate).**

Applicant(s)

James Kent Carpenter, Lambertville, NJ;
Adam Loyack, Feasterville, PA;

Power of Attorney:
Stephen Falk--36795

If Required, Foreign Filing License Granted: 11/14/2006

The country code and number of your priority application, to be used for filing abroad under the Paris Convention, is US60/855,350

Projected Publication Date: None, application is not eligible for pre-grant publication

Non-Publication Request: Not applicable

Early-Publication Request: Not applicable

Title

Process for stripping polymer dispersions

PROTECTING YOUR INVENTION OUTSIDE THE UNITED STATES

Since the rights granted by a U.S. patent extend only throughout the territory of the United States and have no effect in a foreign country, an inventor who wishes patent protection in another country must apply for a patent in a specific country or in regional patent offices. Applicants may wish to consider the filing of an international application under the Patent Cooperation Treaty (PCT). An international (PCT) application generally has the same effect as a regular national patent application in each PCT-member country. The PCT process **simplifies** the filing of patent applications on the same invention in member countries, but **does not result** in a grant of "an international patent" and does not eliminate the need of applicants to file additional documents and fees in countries where patent protection is desired.

Almost every country has its own patent law, and a person desiring a patent in a particular country must make an application for patent in that country in accordance with its particular laws. Since the laws of many countries differ in various respects from the patent law of the United States, applicants are advised to seek guidance from specific foreign countries to ensure that patent rights are not lost prematurely.

Applicants also are advised that in the case of inventions made in the United States, the Director of the USPTO must issue a license before applicants can apply for a patent in a foreign country. The filing of a U.S. patent application serves as a request for a foreign filing license. The application's filing receipt contains further information and guidance as to the status of applicant's license for foreign filing.

Applicants may wish to consult the USPTO booklet, "General Information Concerning Patents" (specifically, the section entitled "Treaties and Foreign Patents") for more information on timeframes and deadlines for filing foreign patent applications. The guide is available either by contacting the USPTO Contact Center at 800-786-9199, or it can be viewed on the USPTO website at http://www.uspto.gov/web/offices/pac/doc/general/index.html.

For information on preventing theft of your intellectual property (patents, trademarks and copyrights), you may wish to consult the U.S. Government website, http://www.stopfakes.gov. Part of a Department of Commerce initiative, this website includes self-help "toolkits" giving innovators guidance on how to protect intellectual property in specific countries such as China, Korea and Mexico. For questions regarding patent enforcement issues, applicants may call the U.S. Government hotline at 1-866-999-HALT (1-866-999-4158).

LICENSE FOR FOREIGN FILING UNDER
Title 35, United States Code, Section 184
Title 37, Code of Federal Regulations, 5.11 & 5.15

GRANTED

The applicant has been granted a license under 35 U.S.C. 184, if the phrase "IF REQUIRED, FOREIGN FILING LICENSE GRANTED" followed by a date appears on this form. Such licenses are issued in all applications where the conditions for issuance of a license have been met, regardless of whether or not a license may be required as set forth in 37 CFR 5.15. The scope and limitations of this license are set forth in 37 CFR 5.15(a) unless an earlier license has been issued under 37 CFR 5.15(b). The license is subject to revocation upon written notification. The date indicated is the effective date of the license, unless an earlier license of similar scope has been granted under 37 CFR 5.13 or 5.14.

This license is to be retained by the licensee and may be used at any time on or after the effective date thereof unless it is revoked. This license is automatically transferred to any related applications(s) filed under 37 CFR 1.53(d). This license is not retroactive.

The grant of a license does not in any way lessen the responsibility of a licensee for the security of the subject matter as imposed by any Government contract or the provisions of existing laws relating to espionage and the national security or the export of technical data. Licensees should apprise themselves of current regulations especially with respect to certain countries, of other agencies, particularly the Office of Defense Trade Controls, Department of State (with respect to Arms, Munitions and Implements of War (22 CFR 121-128)); the Bureau of

Industry and Security, Department of Commerce (15 CFR parts 730-774); the Office of Foreign Assets Control, Department of Treasury (31 CFR Parts 500+) and the Department of Energy.

NOT GRANTED

No license under 35 U.S.C. 184 has been granted at this time, if the phrase "IF REQUIRED, FOREIGN FILING LICENSE GRANTED" DOES NOT appear on this form. Applicant may still petition for a license under 37 CFR 5.12, if a license is desired before the expiration of 6 months from the filing date of the application. If 6 months has lapsed from the filing date of this application and the licensee has not received any indication of a secrecy order under 35 U.S.C. 181, the licensee may foreign file the application pursuant to 37 CFR 5.15(b).

UNITED STATES PATENT AND TRADEMARK OFFICE

Commissioner for Patents
United States Patent and Trademark Office
P.O. Box 1450
Alexandria, VA 22313-1450
www.uspto.gov

FISH & RICHARDSON P.C.
P.O BOX 1022
MINNEAPOLIS, MN 55440-1022

COPY MAILED

DEC 0 7 2007

OFFICE OF PETITIONS

In re Application of :
Ku, et al. :
Application No. 60/855,663 :
Filed: October 31, 2006 :
Attorney Docket No.16156-067P01/AM102050 :

DECISION GRANTING PETITION

This is a decision on the "Petition under 37 CFR 1.53(e)", filed October 4, 2007.

The petition is **granted**.

On October 31, 2006, the above-identified application was filed. Although a filing date of October 31, 2006, was accorded the application, it does not appear that the Office included as part of the original disclosure one sheet of drawings that was purportedly filed on that date. The record does not reflect that a notice regarding the omitted drawings was ever mailed.

On October 4, 2007, applicant filed the present petition, a copy of the drawing sheet containing Figures 1 and 2, and an Office date-stamped postcard receipt acknowledging receipt of one sheet of drawings, among other items.

Upon review of the record, one sheet of drawings was not located among the application papers. However, the evidence is convincing that the application papers deposited October 4, 2007, included one sheet of drawings which was subsequently misplaced by the Office. Therefore, the application, including the one sheet of drawings, was complete on filing and entitled to a filing date of October 31, 2006.

Accordingly, the petition is granted.

The petition fee of $130.00 will be refunded, in due course.

The application file is being returned to the Office of Initial Patent Examination for an indication in the application file record that one sheet of drawings accompanied the original application papers filed October 31, 2006.

Any inquiries related to this decision should be directed to the undersigned at (571) 272-3222.

Kenya A. McLaughlin
Petitions Attorney
Office of Petitions

UNITED STATES PATENT AND TRADEMARK OFFICE

Commissioner for Patents
United States Patent and Trademark Office
P.O. Box 1450
Alexandria, VA 22313-1450
www.uspto.gov

Harness, Dickey & Pierce, P.L.C.
P.O. Box 8910
Reston, VA 20195

COPY MAILED

MAR 3 1 2008

OFFICE OF PETITIONS

In re Application of	:	
Anne Kristin Holmeide, et al.	:	
Application No. 60/855,733	:	DECISION ON PETITION
Filed: November 1, 2006	:	TO WITHDRAW
Attorney Docket No. 10400C-000268/US/PS1	:	FROM RECORD
	:	

This is a decision on the Request to Withdraw as attorney or agent of record under 37 C.F.R. § 1.36(b), filed May 8, 2007.

The request is **NOT APPROVED** as moot.

A review of the file record indicates that the power of attorney to Harness, Dickey & Pierce, P.L.C. has been revoked by the applicants of the patent application on November 29, 2007. Accordingly, the request to withdraw under 37 C.F.R. § 1.36(b) is moot.

All future communications from the Office will continue to be directed to the below-listed address until otherwise notified by applicant.

Telephone inquires concerning this decision should be directed to Terri Williams at 571-272-2991.

T. Williams
Terri Williams
Petitions Examiner
Office of Petitions

cc: **Finnegan, Henderson, Farabow, Garrett & Dunner LLP**
901 New York Avenue, NW
Washington, DC 20001-4413

UNITED STATES PATENT AND TRADEMARK OFFICE

Commissioner for Patents
United States Patent and Trademark Office
P.O. Box 1450
Alexandria, VA 22313-1450
www.uspto.gov
DIW Mar-07

BAKER & BOTTS L.L.P.
30 ROCKEFELLER PLAZA
44TH FLOOR
NEW YORK NY 10112-4498

COPY MAILED

MAR 2 3 2007

OFFICE OF PETITIONS

In re Application of	:	
Millar et al.	:	
Application No. 60/855,911	:	DECISION ON PETITION
Filed: 31 October, 2006	:	
Atty Docket No. 070050.3117	:	

This is a decision on the petition under 37 CFR 1.10(c), filed on 18 December, 2006, requesting that the above-identified application be accorded a filing date of 31 October, 2006, rather than the presently accorded filing date of 1 November, 2006.

Petitioner alleges that the application was deposited in Express Mail service on 31 October, 2006. In support, petitioners have provided a copy of Express Mail Label No. ED762059858US (the same Express Mail number found on the itemized transmittal sheet accompanying the original application papers located in the official file). Although the "date-in" is incomplete on the Express Mail label, the label contains an Official USPS postmark dated "October 31."[1]

In view of the above, the correct date of deposit in Express Mail is 31 October, 2006.

In view of the above, the petition is granted.

The application is being referred to the Office of Initial Patent Examination for correction of the filing date to **31 October, 2006.**

Telephone inquiries specific to this matter should be directed to the undersigned at (571) 272-3231.

D Wood
Douglas I. Wood
Senior Petitions Attorney
Office of Petitions

[1] Although the year is obscured on the postmark, it is obvious, based on the date of filing of the petition, that the date of deposit is 31 October, 2006.

UNITED STATES PATENT AND TRADEMARK OFFICE

UNITED STATES DEPARTMENT OF COMMERCE
United States Patent and Trademark Office
Address: COMMISSIONER FOR PATENTS
P.O. Box 1450
Alexandria, Virginia 22313-1450
www.uspto.gov

APPL NO.	FILING OR 371(c) DATE	ART UNIT	FIL FEE REC'D	ATTY.DOCKET NO	TOT CLMS	IND CLMS
60/855,941	11/01/2006		100	076908.0057		

CONFIRMATION NO. 8741

CORRECTED FILING RECEIPT

OC000000022901465

31824
MCDERMOTT WILL & EMERY LLP
18191 VON KARMAN AVE.
SUITE 500
IRVINE, CA 92612-7108

Date Mailed: 03/14/2007

Receipt is acknowledged of this provisional Patent Application. It will not be examined for patentability and will become abandoned not later than twelve months after its filing date. Be sure to provide the U.S. APPLICATION NUMBER, FILING DATE, NAME OF APPLICANT, and TITLE OF INVENTION when inquiring about this application. Fees transmitted by check or draft are subject to collection. Please verify the accuracy of the data presented on this receipt. **If an error is noted on this Filing Receipt, please mail to the Commissioner for Patents P.O. Box 1450 Alexandria Va 22313-1450. Please provide a copy of this Filing Receipt with the changes noted thereon. If you received a "Notice to File Missing Parts" for this application, please submit any corrections to this Filing Receipt with your reply to the Notice. When the USPTO processes the reply to the Notice, the USPTO will generate another Filing Receipt incorporating the requested corrections (if appropriate).**

Applicant(s)

Hani A. Awad, Rochester, NY;
Edward M. Schwarz, Rochester, NY;

Power of Attorney: The patent practitioners associated with Customer Number **31824**.

If Required, Foreign Filing License Granted: 11/15/2006

The country code and number of your priority application, to be used for filing abroad under the Paris Convention, is US60/855,941

Projected Publication Date: None, application is not eligible for pre-grant publication

Non-Publication Request: Not applicable

Early-Publication Request: Not applicable

**** SMALL ENTITY ****

Title

Freeze-dried tendon allografts as delivery vehicles for genes

PROTECTING YOUR INVENTION OUTSIDE THE UNITED STATES

Since the rights granted by a U.S. patent extend only throughout the territory of the United States and have no effect in a foreign country, an inventor who wishes patent protection in another country must apply for a patent in a specific country or in regional patent offices. Applicants may wish to consider the filing of an international application under the Patent Cooperation Treaty (PCT). An international (PCT) application generally has the same effect as a regular national patent application in each PCT-member country. The PCT process **simplifies** the filing of patent applications on the same invention in member countries, but **does not result** in a grant of "an international patent" and does not eliminate the need of applicants to file additional documents and fees in countries where patent protection is desired.

Almost every country has its own patent law, and a person desiring a patent in a particular country must make an application for patent in that country in accordance with its particular laws. Since the laws of many countries differ in various respects from the patent law of the United States, applicants are advised to seek guidance from specific foreign countries to ensure that patent rights are not lost prematurely.

Applicants also are advised that in the case of inventions made in the United States, the Director of the USPTO must issue a license before applicants can apply for a patent in a foreign country. The filing of a U.S. patent application serves as a request for a foreign filing license. The application's filing receipt contains further information and guidance as to the status of applicant's license for foreign filing.

Applicants may wish to consult the USPTO booklet, "General Information Concerning Patents" (specifically, the section entitled "Treaties and Foreign Patents") for more information on timeframes and deadlines for filing foreign patent applications. The guide is available either by contacting the USPTO Contact Center at 800-786-9199, or it can be viewed on the USPTO website at http://www.uspto.gov/web/offices/pac/doc/general/index.html.

For information on preventing theft of your intellectual property (patents, trademarks and copyrights), you may wish to consult the U.S. Government website, http://www.stopfakes.gov. Part of a Department of Commerce initiative, this website includes self-help "toolkits" giving innovators guidance on how to protect intellectual property in specific countries such as China, Korea and Mexico. For questions regarding patent enforcement issues, applicants may call the U.S. Government hotline at 1-866-999-HALT (1-866-999-4158).

LICENSE FOR FOREIGN FILING UNDER
Title 35, United States Code, Section 184
Title 37, Code of Federal Regulations, 5.11 & 5.15

GRANTED

The applicant has been granted a license under 35 U.S.C. 184, if the phrase "IF REQUIRED, FOREIGN FILING LICENSE GRANTED" followed by a date appears on this form. Such licenses are issued in all applications where the conditions for issuance of a license have been met, regardless of whether or not a license may be required as set forth in 37 CFR 5.15. The scope and limitations of this license are set forth in 37 CFR 5.15(a) unless an earlier license has been issued under 37 CFR 5.15(b). The license is subject to revocation upon written notification. The date indicated is the effective date of the license, unless an earlier license of similar scope has been granted under 37 CFR 5.13 or 5.14.

This license is to be retained by the licensee and may be used at any time on or after the effective date thereof unless it is revoked. This license is automatically transferred to any related applications(s) filed under 37 CFR 1.53(d). This license is not retroactive.

The grant of a license does not in any way lessen the responsibility of a licensee for the security of the subject matter as imposed by any Government contract or the provisions of existing laws relating to espionage and the national security or the export of technical data. Licensees should apprise themselves of current regulations especially with respect to certain countries, of other agencies, particularly the Office of Defense Trade Controls, Department of State (with respect to Arms, Munitions and Implements of War (22 CFR 121-128)); the Bureau of

Industry and Security, Department of Commerce (15 CFR parts 730-774); the Office of Foreign Assets Control, Department of Treasury (31 CFR Parts 500+) and the Department of Energy.

NOT GRANTED

No license under 35 U.S.C. 184 has been granted at this time, if the phrase "IF REQUIRED, FOREIGN FILING LICENSE GRANTED" DOES NOT appear on this form. Applicant may still petition for a license under 37 CFR 5.12, if a license is desired before the expiration of 6 months from the filing date of the application. If 6 months has lapsed from the filing date of this application and the licensee has not received any indication of a secrecy order under 35 U.S.C. 181, the licensee may foreign file the application pursuant to 37 CFR 5.15(b).

UNITED STATES PATENT AND TRADEMARK OFFICE

COMMISSIONER FOR PATENTS
UNITED STATES PATENT AND TRADEMARK OFFICE
P.O. BOX 1450
ALEXANDRIA, VA 22313-1450
www.uspto.gov

COPY MAILED
OCT 24 2007
OFFICE OF PETITIONS

SLATER & MATSIL, L.L.P.
17950 PRESTON ROAD, SUITE 1000
DALLAS, TX 75252

In re Application of	:	
Wang, et al.	:	
Application No. 60/856,423	:	DECISION ON PETITION
Filed: November 3, 2006	:	
Attorney Docket No. TSM06-0678P	:	

This is a decision on the petition under 37 CFR 1.182, filed May 21, 2007, to correct the name of inventor "Simon Wang" to – Chia Wei Wang --.

The petition is **GRANTED**.

Office records have been updated to reflect the correction of the inventor's name. A corrected Filing Receipt, which reflects the inventor's name, accompanies this decision on petition.

As authorized, the $400 fee for the petition under 37 CFR 1.182 has been assessed to petitioner's deposit account.

Any questions concerning this matter may be directed to the undersigned at (571) 272-3204.

Sherry D. Brinkley
Petitions Examiner
Office of Petitions

ATTACHMENT: Corrected Filing Receipt

UNITED STATES PATENT AND TRADEMARK OFFICE

UNITED STATES DEPARTMENT OF COMMERCE
United States Patent and Trademark Office
Address: COMMISSIONER FOR PATENTS
P.O. Box 1450
Alexandria, Virginia 22313-1450
www.uspto.gov

APPLICATION NUMBER	FILING or 371(c) DATE	GRP ART UNIT	FIL FEE REC'D	ATTY.DOCKET.NO	TOT CLAIMS	IND CLAIMS
60/856,423	11/03/2006		200	TSM06-0678P		

CONFIRMATION NO. 1469

CORRECTED FILING RECEIPT

43859
SLATER & MATSIL, L.L.P.
17950 PRESTON ROAD, SUITE 1000
DALLAS, TX 75252

OC000000026381263

Date Mailed: 10/19/2007

Receipt is acknowledged of this provisional patent application. It will not be examined for patentability and will become abandoned not later than twelve months after its filing date. Any correspondence concerning the application must include the following identification information: the U.S. APPLICATION NUMBER, FILING DATE, NAME OF APPLICANT, and TITLE OF INVENTION. Fees transmitted by check or draft are subject to collection. Please verify the accuracy of the data presented on this receipt. **If an error is noted on this Filing Receipt, please write to the Office of Initial Patent Examination's Filing Receipt Corrections. Please provide a copy of this Filing Receipt with the changes noted thereon. If you received a "Notice to File Missing Parts" for this application, please submit any corrections to this Filing Receipt with your reply to the Notice. When the USPTO processes the reply to the Notice, the USPTO will generate another Filing Receipt incorporating the requested corrections**

Applicant(s)

Chia Wei Wang, Hsin-Chu, TAIWAN;
Lee Cheng Hung, Hsinchu, TAIWAN;
Hung-Jen Liao, Hsinchu, TAIWAN;
Fu-Chieh Hsu, Hsin-Chu, TAIWAN;

Power of Attorney:
Steven Slater--35361

If Required, Foreign Filing License Granted: 11/21/2006
The country code and number of your priority application, to be used for filing abroad under the Paris Convention, is **US 60/856,423**
Projected Publication Date: None, application is not eligible for pre-grant publication
Non-Publication Request: No
Early Publication Request: No
Title

Two stage suppress pulse word line and negative bit line design

PROTECTING YOUR INVENTION OUTSIDE THE UNITED STATES

Since the rights granted by a U.S. patent extend only throughout the territory of the United States and have no effect in a foreign country, an inventor who wishes patent protection in another country must apply for a patent in a specific country or in regional patent offices. Applicants may wish to consider the filing of an international application under the Patent Cooperation Treaty (PCT). An international (PCT) application generally has the same effect as a regular national patent application in each PCT-member country. The PCT process **simplifies** the filing

of patent applications on the same invention in member countries, but **does not result** in a grant of "an international patent" and does not eliminate the need of applicants to file additional documents and fees in countries where patent protection is desired.

Almost every country has its own patent law, and a person desiring a patent in a particular country must make an application for patent in that country in accordance with its particular laws. Since the laws of many countries differ in various respects from the patent law of the United States, applicants are advised to seek guidance from specific foreign countries to ensure that patent rights are not lost prematurely.

Applicants also are advised that in the case of inventions made in the United States, the Director of the USPTO must issue a license before applicants can apply for a patent in a foreign country. The filing of a U.S. patent application serves as a request for a foreign filing license. The application's filing receipt contains further information and guidance as to the status of applicant's license for foreign filing.

Applicants may wish to consult the USPTO booklet, "General Information Concerning Patents" (specifically, the section entitled "Treaties and Foreign Patents") for more information on timeframes and deadlines for filing foreign patent applications. The guide is available either by contacting the USPTO Contact Center at 800-786-9199, or it can be viewed on the USPTO website at http://www.uspto.gov/web/offices/pac/doc/general/index.html.

For information on preventing theft of your intellectual property (patents, trademarks and copyrights), you may wish to consult the U.S. Government website, http://www.stopfakes.gov. Part of a Department of Commerce initiative, this website includes self-help "toolkits" giving innovators guidance on how to protect intellectual property in specific countries such as China, Korea and Mexico. For questions regarding patent enforcement issues, applicants may call the U.S. Government hotline at 1-866-999-HALT (1-866-999-4158).

LICENSE FOR FOREIGN FILING UNDER

Title 35, United States Code, Section 184

Title 37, Code of Federal Regulations, 5.11 & 5.15

GRANTED

The applicant has been granted a license under 35 U.S.C. 184, if the phrase "IF REQUIRED, FOREIGN FILING LICENSE GRANTED" followed by a date appears on this form. Such licenses are issued in all applications where the conditions for issuance of a license have been met, regardless of whether or not a license may be required as set forth in 37 CFR 5.15. The scope and limitations of this license are set forth in 37 CFR 5.15(a) unless an earlier license has been issued under 37 CFR 5.15(b). The license is subject to revocation upon written notification. The date indicated is the effective date of the license, unless an earlier license of similar scope has been granted under 37 CFR 5.13 or 5.14.

This license is to be retained by the licensee and may be used at any time on or after the effective date thereof unless it is revoked. This license is automatically transferred to any related applications(s) filed under 37 CFR 1.53(d). This license is not retroactive.

The grant of a license does not in any way lessen the responsibility of a licensee for the security of the subject matter as imposed by any Government contract or the provisions of existing laws relating to espionage and the national security or the export of technical data. Licensees should apprise themselves of current regulations especially with respect to certain countries, of other agencies, particularly the Office of Defense Trade Controls, Department of

State (with respect to Arms, Munitions and Implements of War (22 CFR 121-128)); the Bureau of Industry and Security, Department of Commerce (15 CFR parts 730-774); the Office of Foreign AssetsControl, Department of Treasury (31 CFR Parts 500+) and the Department of Energy.

NOT GRANTED

No license under 35 U.S.C. 184 has been granted at this time, if the phrase "IF REQUIRED, FOREIGN FILING LICENSE GRANTED" DOES NOT appear on this form. Applicant may still petition for a license under 37 CFR 5.12, if a license is desired before the expiration of 6 months from the filing date of the application. If 6 months has lapsed from the filing date of this application and the licensee has not received any indication of a secrecy order under 35 U.S.C. 181, the licensee may foreign file the application pursuant to 37 CFR 5.15(b).

UNITED STATES PATENT AND TRADEMARK OFFICE

UNITED STATES DEPARTMENT OF COMMERCE
United States Patent and Trademark Office
Address: COMMISSIONER FOR PATENTS
P.O. Box 1450
Alexandria, Virginia 22313-1450
www.uspto.gov

APPL NO.	FILING OR 371 (c) DATE	ART UNIT	FIL FEE REC'D	ATTY.DOCKET NO	DRAWINGS	TOT CLMS	IND CLMS
60/856,425	11/01/2006		100	29094/31:1	9		

CONFIRMATION NO. 1481

CORRECTED FILING RECEIPT

OC000000021373061

3528
STOEL RIVES LLP
900 SW FIFTH AVENUE
SUITE 2600
PORTLAND, OR 97204-1268

Date Mailed: 11/28/2006

Receipt is acknowledged of this provisional Patent Application. It will not be examined for patentability and will become abandoned not later than twelve months after its filing date. Be sure to provide the U.S. APPLICATION NUMBER, FILING DATE, NAME OF APPLICANT, and TITLE OF INVENTION when inquiring about this application. Fees transmitted by check or draft are subject to collection. Please verify the accuracy of the data presented on this receipt. **If an error is noted on this Filing Receipt, please mail to the Commissioner for Patents P.O. Box 1450 Alexandria Va 22313-1450. Please provide a copy of this Filing Receipt with the changes noted thereon. If you received a "Notice to File Missing Parts" for this application, please submit any corrections to this Filing Receipt with your reply to the Notice. When the USPTO processes the reply to the Notice, the USPTO will generate another Filing Receipt incorporating the requested corrections (if appropriate).**

Applicant(s)

William R. Brandt, Arlington, VA;

Power of Attorney:

Nathan Scherer--58460

If Required, Foreign Filing License Granted: 11/20/2006

The country code and number of your priority application, to be used for filing abroad under the Paris Convention, is US60/856,425

Projected Publication Date: None, application is not eligible for pre-grant publication

Non-Publication Request: Not applicable

Early-Publication Request: Not applicable

**** SMALL ENTITY ****

Title

Mailpiece reject processing and labeling

PROTECTING YOUR INVENTION OUTSIDE THE UNITED STATES

Since the rights granted by a U.S. patent extend only throughout the territory of the United States and have no effect in a foreign country, an inventor who wishes patent protection in another country must apply for a patent in a specific country or in regional patent offices. Applicants may wish to consider the filing of an international application under the Patent Cooperation Treaty (PCT). An international (PCT) application generally has the same effect as a regular national patent application in each PCT-member country. The PCT process **simplifies** the filing of patent applications on the same invention in member countries, but **does not result** in a grant of "an international patent" and does not eliminate the need of applicants to file additional documents and fees in countries where patent protection is desired.

Almost every country has its own patent law, and a person desiring a patent in a particular country must make an application for patent in that country in accordance with its particular laws. Since the laws of many countries differ in various respects from the patent law of the United States, applicants are advised to seek guidance from specific foreign countries to ensure that patent rights are not lost prematurely.

Applicants also are advised that in the case of inventions made in the United States, the Director of the USPTO must issue a license before applicants can apply for a patent in a foreign country. The filing of a U.S. patent application serves as a request for a foreign filing license. The application's filing receipt contains further information and guidance as to the status of applicant's license for foreign filing.

Applicants may wish to consult the USPTO booklet, "General Information Concerning Patents" (specifically, the section entitled "Treaties and Foreign Patents") for more information on timeframes and deadlines for filing foreign patent applications. The guide is available either by contacting the USPTO Contact Center at 800-786-9199, or it can be viewed on the USPTO website at http://www.uspto.gov/web/offices/pac/doc/general/index.html.

For information on preventing theft of your intellectual property (patents, trademarks and copyrights), you may wish to consult the U.S. Government website, http://www.stopfakes.gov. Part of a Department of Commerce initiative, this website includes self-help "toolkits" giving innovators guidance on how to protect intellectual property in specific countries such as China, Korea and Mexico. For questions regarding patent enforcement issues, applicants may call the U.S. Government hotline at 1-866-999-HALT (1-866-999-4158).

LICENSE FOR FOREIGN FILING UNDER
Title 35, United States Code, Section 184
Title 37, Code of Federal Regulations, 5.11 & 5.15

GRANTED

The applicant has been granted a license under 35 U.S.C. 184, if the phrase "IF REQUIRED, FOREIGN FILING LICENSE GRANTED" followed by a date appears on this form. Such licenses are issued in all applications where the conditions for issuance of a license have been met, regardless of whether or not a license may be required as set forth in 37 CFR 5.15. The scope and limitations of this license are set forth in 37 CFR 5.15(a) unless an earlier license has been issued under 37 CFR 5.15(b). The license is subject to revocation upon written notification. The date indicated is the effective date of the license, unless an earlier license of similar scope has been granted under 37 CFR 5.13 or 5.14.

This license is to be retained by the licensee and may be used at any time on or after the effective date thereof unless it is revoked. This license is automatically transferred to any related applications(s) filed under 37 CFR 1.53(d). This license is not retroactive.

The grant of a license does not in any way lessen the responsibility of a licensee for the security of the subject matter as imposed by any Government contract or the provisions of existing laws relating to espionage and the national security or the export of technical data. Licensees should apprise themselves of current regulations especially with respect to certain countries, of other agencies, particularly the Office of Defense Trade Controls,

Department of State (with respect to Arms, Munitions and Implements of War (22 CFR 121-128)); the Bureau of Industry and Security, Department of Commerce (15 CFR parts 730-774); the Office of Foreign Assets Control, Department of Treasury (31 CFR Parts 500+) and the Department of Energy.

NOT GRANTED

No license under 35 U.S.C. 184 has been granted at this time, if the phrase "IF REQUIRED, FOREIGN FILING LICENSE GRANTED" DOES NOT appear on this form. Applicant may still petition for a license under 37 CFR 5.12, if a license is desired before the expiration of 6 months from the filing date of the application. If 6 months has lapsed from the filing date of this application and the licensee has not received any indication of a secrecy order under 35 U.S.C. 181, the licensee may foreign file the application pursuant to 37 CFR 5.15(b).

UNITED STATES PATENT AND TRADEMARK OFFICE

UNITED STATES DEPARTMENT OF COMMERCE
United States Patent and Trademark Office
Address: COMMISSIONER FOR PATENTS
P.O. Box 1450
Alexandria, Virginia 22313-1450
www.uspto.gov

APPL NO.	FILING OR 371 (c) DATE	ART UNIT	FIL FEE REC'D	ATTY.DOCKET NO	DRAWINGS	TOT CLMS	IND CLMS
60/856,450	11/02/2006		225	19705-036 PRO D	1		

CONFIRMATION NO. 1834

CORRECTED FILING RECEIPT

OC000000022025705

Ivor R. Elrifi, Ph.D.
MINTZ, LEVIN, COHN, FERRIS,
GLOVSKY AND POPEO, P.C.
One Financial Center
Boston, MA 02111

Date Mailed: 01/17/2007

Receipt is acknowledged of this provisional Patent Application. It will not be examined for patentability and will become abandoned not later than twelve months after its filing date. Be sure to provide the U.S. APPLICATION NUMBER, FILING DATE, NAME OF APPLICANT, and TITLE OF INVENTION when inquiring about this application. Fees transmitted by check or draft are subject to collection. Please verify the accuracy of the data presented on this receipt. **If an error is noted on this Filing Receipt, please mail to the Commissioner for Patents P.O. Box 1450 Alexandria Va 22313-1450. Please provide a copy of this Filing Receipt with the changes noted thereon. If you received a "Notice to File Missing Parts" for this application, please submit any corrections to this Filing Receipt with your reply to the Notice. When the USPTO processes the reply to the Notice, the USPTO will generate another Filing Receipt incorporating the requested corrections (if appropriate).**

Applicant(s)

Shaker Mousa, Wynantskill, NY;
Paul Davis, West Sand Lake, NY;

Power of Attorney: The patent practitioners associated with Customer Number **30623**.

If Required, Foreign Filing License Granted: 11/20/2006

The country code and number of your priority application, to be used for filing abroad under the Paris Convention, is US60/856,450

Projected Publication Date: None, application is not eligible for pre-grant publication

Non-Publication Request: Not applicable

Early-Publication Request: Not applicable

**** SMALL ENTITY ****

Title

Thyroid hormone analogs and methods of use

PROTECTING YOUR INVENTION OUTSIDE THE UNITED STATES

Since the rights granted by a U.S. patent extend only throughout the territory of the United States and have no effect in a foreign country, an inventor who wishes patent protection in another country must apply for a patent in a specific country or in regional patent offices. Applicants may wish to consider the filing of an international application under the Patent Cooperation Treaty (PCT). An international (PCT) application generally has the same effect as a regular national patent application in each PCT-member country. The PCT process **simplifies** the filing of patent applications on the same invention in member countries, but **does not result** in a grant of "an international patent" and does not eliminate the need of applicants to file additional documents and fees in countries where patent protection is desired.

Almost every country has its own patent law, and a person desiring a patent in a particular country must make an application for patent in that country in accordance with its particular laws. Since the laws of many countries differ in various respects from the patent law of the United States, applicants are advised to seek guidance from specific foreign countries to ensure that patent rights are not lost prematurely.

Applicants also are advised that in the case of inventions made in the United States, the Director of the USPTO must issue a license before applicants can apply for a patent in a foreign country. The filing of a U.S. patent application serves as a request for a foreign filing license. The application's filing receipt contains further information and guidance as to the status of applicant's license for foreign filing.

Applicants may wish to consult the USPTO booklet, "General Information Concerning Patents" (specifically, the section entitled "Treaties and Foreign Patents") for more information on timeframes and deadlines for filing foreign patent applications. The guide is available either by contacting the USPTO Contact Center at 800-786-9199, or it can be viewed on the USPTO website at http://www.uspto.gov/web/offices/pac/doc/general/index.html.

For information on preventing theft of your intellectual property (patents, trademarks and copyrights), you may wish to consult the U.S. Government website, http://www.stopfakes.gov. Part of a Department of Commerce initiative, this website includes self-help "toolkits" giving innovators guidance on how to protect intellectual property in specific countries such as China, Korea and Mexico. For questions regarding patent enforcement issues, applicants may call the U.S. Government hotline at 1-866-999-HALT (1-866-999-4158).

LICENSE FOR FOREIGN FILING UNDER
Title 35, United States Code, Section 184
Title 37, Code of Federal Regulations, 5.11 & 5.15

GRANTED

The applicant has been granted a license under 35 U.S.C. 184, if the phrase "IF REQUIRED, FOREIGN FILING LICENSE GRANTED" followed by a date appears on this form. Such licenses are issued in all applications where the conditions for issuance of a license have been met, regardless of whether or not a license may be required as set forth in 37 CFR 5.15. The scope and limitations of this license are set forth in 37 CFR 5.15(a) unless an earlier license has been issued under 37 CFR 5.15(b). The license is subject to revocation upon written notification. The date indicated is the effective date of the license, unless an earlier license of similar scope has been granted under 37 CFR 5.13 or 5.14.

This license is to be retained by the licensee and may be used at any time on or after the effective date thereof unless it is revoked. This license is automatically transferred to any related applications(s) filed under 37 CFR 1.53(d). This license is not retroactive.

The grant of a license does not in any way lessen the responsibility of a licensee for the security of the subject matter as imposed by any Government contract or the provisions of existing laws relating to espionage and the national security or the export of technical data. Licensees should apprise themselves of current regulations especially with respect to certain countries, of other agencies, particularly the Office of Defense Trade Controls, Department of State (with respect to Arms, Munitions and Implements of War (22 CFR 121-128)); the Bureau of

Industry and Security, Department of Commerce (15 CFR parts 730-774); the Office of Foreign Assets Control, Department of Treasury (31 CFR Parts 500+) and the Department of Energy.

NOT GRANTED

No license under 35 U.S.C. 184 has been granted at this time, if the phrase "IF REQUIRED, FOREIGN FILING LICENSE GRANTED" DOES NOT appear on this form. Applicant may still petition for a license under 37 CFR 5.12, if a license is desired before the expiration of 6 months from the filing date of the application. If 6 months has lapsed from the filing date of this application and the licensee has not received any indication of a secrecy order under 35 U.S.C. 181, the licensee may foreign file the application pursuant to 37 CFR 5.15(b).

UNITED STATES PATENT AND TRADEMARK OFFICE

Commissioner for Patents
United States Patent and Trademark Office
P.O. Box 1450
Alexandria, VA 22313-1450
www.uspto.gov

SCOTT BOALICK
USPTO
600 DULANY STREET
ALEXANDRIA, VA 22313

COPY MAILED

AUG 20 2007

OFFICE OF PETITIONS

In re Application of	:	
William Martin Hertel III	:	
Application No. 60/856,473	:	DECISION ON PETITION
Filed: November 3, 2006	:	TO WITHDRAW
Attorney Docket No. 97,831	:	FROM RECORD
	:	

This is a decision on the Request to Withdraw as attorney or agent of record under 37 C.F.R. § 1.36(b), filed April 2, 2007.

The request is **APPROVED**.

A grantable request to withdraw as attorney/agent of record must be signed by every attorney/agent seeking to withdraw or contain a clear indication that one attorney is signing on behalf of another/others. A request to withdraw will not be approved unless at least 30 (thirty) days would remain between the date of approval and the later of the expiration date of a time to file a response or the expiration date of the maximum time period which can be extended under 37 C.F.R. § 1.136(a).

The request was signed by Scott Boalick. Scott Boalick has been withdrawn as attorney or agent of record; all other attorneys remain of record.

The correspondence address of record remains unchanged.

There is no outstanding Office action at this time.

Telephone inquiries concerning this decision should be directed to Terri Williams at 571-272-2991.

Terri Williams
Petitions Examiner
Office of Petitions

cc: **OFFICE OF COUNSEL, CODE 004**
NAVAL SURFACE WARFARE CENTER, CARDEROCK DIVISION
9500 MACARTHUR BLVD.
WEST BETHESDA MD 20817

UNITED STATES PATENT AND TRADEMARK OFFICE

Commissioner for Patents
United States Patent and Trademark Office
P.O. Box 1450
Alexandria, VA 22313-1450
www.uspto.gov

LOUIS J WILLE
BRISTOL-MYERS SQUIBB COMPANY
PATENT DEPARTMENT
P O BOX 4000
PRINCETON NJ 08543-4000

COPY MAILED
MAR 05 2007
OFFICE OF PETITIONS

In re Application of	:	
Lee, et al.	:	
Application No. 60/857,628	:	DECISION ON PETITION
Filed: November 8, 2006	:	
Attorney Docket No. 10962 PSP1	:	

This is a decision on the petition under 37 CFR 1.53, filed January 5, 2007, to accord the above-identified application a filing date of November 8, 2006.

The petition under 37 CFR 1.53 is **GRANTED**.

The application was deposited on November 8, 2006. However, on November 22, 2006, the Initial Patent Examination Division mailed a "Notice of Incomplete Provisional Application", notifying applicants that the application papers had been deposited without drawings, and stating that the filing date of the application would be the date of receipt of the omitted drawings.

On January 5, 2007, applicants filed the instant petition. Applicants state that drawings are not necessary for an understanding of the claimed subject matter, and therefore, the application should be accorded the November 8, 2006 filing date without the drawings.

As stated in MPEP 601.01(f), it is the practice of the PTO to treat a provisional application that contains at least some disclosure of a process or method as an application for which a drawing is not necessary for an understanding of the invention under 35 U.S.C. 113 (first sentence).

MPEP 601.01(f) also states that:

> A nonprovisional application having at least one claim, or a provisional application having at least some disclosure, directed to the subject matter discussed above for which a drawing is usually not considered essential for a filing date, describing drawing figure(s) in the specification, but filed without drawings will be treated as an application filed without all of the drawing figures referred to in the specification as discussed in MPEP 601.01(g), so long as the application contains something that can be construed as a written description and the name of all the inventors.

The instant provisional application contains method claims, namely claims 1 - 21. Therefore, the application should have been treated as an application filed without all of the drawing figures referred to in the specification as discussed in MPEP 601.01(g).

In view of the above, the "Notice of Incomplete Provisional Application" mailed November 22, 2006, was mailed in error and is hereby **withdrawn**.

The application is being forwarded to the Office of Initial Patent Examination for further processing as a provisional application with a filing date of November 8, 2006, and for indication on the file wrapper label to show that "0" sheets of drawings were present on filing.

Telephone inquiries specific to this decision may be directed to the undersigned at (571)272-3207.

Cliff Congo
Petitions Attorney
Office of Petitions

UNITED STATES PATENT AND TRADEMARK OFFICE

UNITED STATES DEPARTMENT OF COMMERCE
United States Patent and Trademark Office
Address: COMMISSIONER FOR PATENTS
P.O. Box 1450
Alexandria, Virginia 22313-1450
www.uspto.gov

APPL NO.	FILING OR 371 (c) DATE	ART UNIT	FIL FEE REC'D	ATTY.DOCKET NO	DRAWINGS	TOT CLMS	IND CLMS
60/858,289	11/08/2006		200	01997.069100.PV	8		

CONFIRMATION NO. 8990

CORRECTED FILING RECEIPT

OC000000022090430

45743
FITZPATRICK CELLA (WYETH)
30 ROCKEFELLER PLAZA
NEW YORK, NY 10112-3800

Date Mailed: 01/22/2007

Receipt is acknowledged of this provisional Patent Application. It will not be examined for patentability and will become abandoned not later than twelve months after its filing date. Be sure to provide the U.S. APPLICATION NUMBER, FILING DATE, NAME OF APPLICANT, and TITLE OF INVENTION when inquiring about this application. Fees transmitted by check or draft are subject to collection. Please verify the accuracy of the data presented on this receipt. **If an error is noted on this Filing Receipt, please mail to the Commissioner for Patents P.O. Box 1450 Alexandria Va 22313-1450. Please provide a copy of this Filing Receipt with the changes noted thereon. If you received a "Notice to File Missing Parts" for this application, please submit any corrections to this Filing Receipt with your reply to the Notice. When the USPTO processes the reply to the Notice, the USPTO will generate another Filing Receipt incorporating the requested corrections (if appropriate).**

Applicant(s)

Yen-Tung Luan, Chelmsford, MA;
Wenge Wang, North Chelmsford, MA;
Ryan Nolan, Stoneham, MA;
Denis Drapeau, Salem, NH;

Power of Attorney: The patent practitioners associated with Customer Number **45743**.

If Required, Foreign Filing License Granted: 11/27/2006

The country code and number of your priority application, to be used for filing abroad under the Paris Convention, is US60/858,289

Projected Publication Date: None, application is not eligible for pre-grant publication

Non-Publication Request: Not applicable

Early-Publication Request: Not applicable

Title

Rationally designed media for cell culture

PROTECTING YOUR INVENTION OUTSIDE THE UNITED STATES

Since the rights granted by a U.S. patent extend only throughout the territory of the United States and have no effect in a foreign country, an inventor who wishes patent protection in another country must apply for a patent in a specific country or in regional patent offices. Applicants may wish to consider the filing of an international application under the Patent Cooperation Treaty (PCT). An international (PCT) application generally has the same effect as a regular national patent application in each PCT-member country. The PCT process **simplifies** the filing of patent applications on the same invention in member countries, but **does not result** in a grant of "an international patent" and does not eliminate the need of applicants to file additional documents and fees in countries where patent protection is desired.

Almost every country has its own patent law, and a person desiring a patent in a particular country must make an application for patent in that country in accordance with its particular laws. Since the laws of many countries differ in various respects from the patent law of the United States, applicants are advised to seek guidance from specific foreign countries to ensure that patent rights are not lost prematurely.

Applicants also are advised that in the case of inventions made in the United States, the Director of the USPTO must issue a license before applicants can apply for a patent in a foreign country. The filing of a U.S. patent application serves as a request for a foreign filing license. The application's filing receipt contains further information and guidance as to the status of applicant's license for foreign filing.

Applicants may wish to consult the USPTO booklet, "General Information Concerning Patents" (specifically, the section entitled "Treaties and Foreign Patents") for more information on timeframes and deadlines for filing foreign patent applications. The guide is available either by contacting the USPTO Contact Center at 800-786-9199, or it can be viewed on the USPTO website at http://www.uspto.gov/web/offices/pac/doc/general/index.html.

For information on preventing theft of your intellectual property (patents, trademarks and copyrights), you may wish to consult the U.S. Government website, http://www.stopfakes.gov. Part of a Department of Commerce initiative, this website includes self-help "toolkits" giving innovators guidance on how to protect intellectual property in specific countries such as China, Korea and Mexico. For questions regarding patent enforcement issues, applicants may call the U.S. Government hotline at 1-866-999-HALT (1-866-999-4158).

LICENSE FOR FOREIGN FILING UNDER
Title 35, United States Code, Section 184
Title 37, Code of Federal Regulations, 5.11 & 5.15

GRANTED

The applicant has been granted a license under 35 U.S.C. 184, if the phrase "IF REQUIRED, FOREIGN FILING LICENSE GRANTED" followed by a date appears on this form. Such licenses are issued in all applications where the conditions for issuance of a license have been met, regardless of whether or not a license may be required as set forth in 37 CFR 5.15. The scope and limitations of this license are set forth in 37 CFR 5.15(a) unless an earlier license has been issued under 37 CFR 5.15(b). The license is subject to revocation upon written notification. The date indicated is the effective date of the license, unless an earlier license of similar scope has been granted under 37 CFR 5.13 or 5.14.

This license is to be retained by the licensee and may be used at any time on or after the effective date thereof unless it is revoked. This license is automatically transferred to any related applications(s) filed under 37 CFR 1.53(d). This license is not retroactive.

The grant of a license does not in any way lessen the responsibility of a licensee for the security of the subject matter as imposed by any Government contract or the provisions of existing laws relating to espionage and the national security or the export of technical data. Licensees should apprise themselves of current regulations especially with respect to certain countries, of other agencies, particularly the Office of Defense Trade Controls, Department of State (with respect to Arms, Munitions and Implements of War (22 CFR 121-128)); the Bureau of

Industry and Security, Department of Commerce (15 CFR parts 730-774); the Office of Foreign Assets Control, Department of Treasury (31 CFR Parts 500+) and the Department of Energy.

NOT GRANTED

No license under 35 U.S.C. 184 has been granted at this time, if the phrase "IF REQUIRED, FOREIGN FILING LICENSE GRANTED" DOES NOT appear on this form. Applicant may still petition for a license under 37 CFR 5.12, if a license is desired before the expiration of 6 months from the filing date of the application. If 6 months has lapsed from the filing date of this application and the licensee has not received any indication of a secrecy order under 35 U.S.C. 181, the licensee may foreign file the application pursuant to 37 CFR 5.15(b).

UNITED STATES PATENT AND TRADEMARK OFFICE

Commissioner for Patents
United States Patent and Trademark Office
P.O. Box 1450
Alexandria, VA 22313-1450
www.uspto.gov

DOUGLAS T. JOHNSON
MILLER & MARTIN
1000 VOLUNTEER BUILDING
832 GEORGIA AVENUE
CHATTANOOGA TN 37402-2289

COPY MAILED

APR 1 2 2007

OFFICE OF PETITIONS

In re Application of :
Jones, et al. :
Application No. 60/858,417 : ON PETITION
Filed: November 13, 2006 :
Attorney Docket No. 18310-0001 :
For: METHOD AND APPARATUS FOR DISPENSING CONFECTIONERY AND OTHER CONSUMABLES

This is a decision on the petition entitled, "PETITION FOR FILING DATE", filed January 29, 2007, requesting that the above-identified application be accorded a filing date of November 9, 2006, rather than the presently accorded filing date of November 13, 2006. The petition will be treated under 37 CFR 1.10(d).

The petition under 37 CFR 1.10(d) is **dismissed**.

Petitioners contend that the above-identified application was deposited in the United States Postal Service (USPS) Express Mail service on November 9, 2006, and accordingly requests a November 9, 2006 filing date for the application.

Paragraph (a) of 37 CFR 1.10 states that:

> Any correspondence received by the Patent and Trademark Office (Office) that was delivered by the "Express Mail Post Office to Addressee" service of the United States Postal Service (USPS) will be considered filed in the Office on the date of deposit with the USPS. <u>The date of deposit with the USPS is shown by the "date-in" on the "Express Mail" mailing label or other official USPS notation</u>. If the USPS deposit date cannot be determined, the correspondence will be accorded the Office receipt date as the filing date. See §1.6(a).

(Emphasis supplied). Paragraph (d) of 37 CFR 1.10 states that:

> Any person filing correspondence under this section that was received by the Office and delivered by the "Express Mail Post Office to Addressee" service of the USPS, who can show that the "date-in" on the "Express Mail" mailing label or other official notation entered by the USPS was incorrectly entered or omitted by the USPS, may petition the Director to accord the correspondence a filing date as of the date the correspondence is shown to have been deposited with the USPS, provided that:
>
> (1) The petition is filed promptly after the person becomes aware that the Office has accorded, or will accord, a filing date based upon an incorrect entry by the USPS;
>
> (2) The number of the "Express Mail" mailing label was placed on the paper(s) or fee(s) that constitute the correspondence prior to the original mailing by "Express Mail"; and
>
> (3) The petition includes a showing, which establishes to the satisfaction of the Director, that the requested filing date was the date the correspondence was deposited in "Express Mail Post Office to Addressee" service prior to the last scheduled pickup for that day. Any showing pursuant to this paragraph must be corroborated by evidence from the USPS or that came into being after deposit and within one business day of the deposit of the correspondence in the "Express Mail Post Office to Addressee" service of the USPS.

A grantable petition under 37 CFR 1.10(d) must include "a showing which establishes, to the satisfaction of the Director, that the requested filing date was the date the correspondence was deposited in "Express Mail Post Office to Addressee" service prior to the last scheduled pickup for that day." In addition, the showing "must be corroborated by evidence from the USPS or that came into being after deposit and within one business day of the deposit of the correspondence in the 'Express Mail Post Office to Addressee' service of the USPS."

It is noted that a copy of the Express Mail label in question, No. EQ230645495US has not been provided.

The petition does <u>not</u> include the corroborating evidence required by the rule. The declaration by Beverly L. Middleton was created months after the alleged deposit, not within one business day of the alleged deposit.

The petition to accord a November 9, 2006 filing date to the above-identified application is <u>dismissed</u>.

The application is being returned to the Office of Initial Patent Examination with the presently accorded filing date of November 13, 2006.

Further correspondence with respect to this matter should be addressed as follows:

By mail: Mail Stop PETITION
Commissioner for Patents
Post Office Box 1450
Alexandria, VA 22313-1450

By hand: U.S. Patent and Trademark Office
Customer Service Window, Mail Stop Petition
Randolph Building
401 Dulany Street
Alexandria, VA 22314

By FAX: (571) 273-8300 - ATTN: Office of Petitions

Telephone inquiries concerning this matter should be directed to the undersigned at (571) 272-3230.

Shirene Willis Brantley

Shirene Willis Brantley
Senior Petitions Attorney
Office of Petitions

UNITED STATES PATENT AND TRADEMARK OFFICE

COMMISSIONER FOR PATENTS
UNITED STATES PATENT AND TRADEMARK OFFICE
P.O. BOX 1450
ALEXANDRIA, VA 22313-1450
www.uspto.gov

DOUGLAS T. JOHNSON
MILLER & MARTIN
1000 VOLUNTEER BUILDING
832 GEORGIA AVENUE
CHATTANOOGA TN 37402-2289

COPY MAILED

MAY 21 2007

OFFICE OF PETITIONS

In re Application of :
Jones, et al. :
Application No. 60/858,417 :
Filed: November 13, 2006 :
Attorney Docket No. 1830-0001 :
For: METHOD AND APPARATUS FOR DISPENSING CONFECTIONERY AND OTHER CONSUMABLES

ON PETITION

This is a decision on the reconsideration petition filed April 26, 2007 (certificate of mailing date April 24, 2007) under 37 CFR 1.10(d), requesting that the above-identified application be accorded a filing date of November 9, 2006, rather than the presently accorded filing date of November 13, 2006.

The petition under 37 CFR 1.10(d) is **GRANTED**.

Petitioners request the earlier filing date on the basis that the application was deposited in Express Mail service on November 9, 2006, pursuant to the requirements of 37 CFR 1.10. The petition is accompanied by a printout of the United States Postal Service Track/Confirm for the package associated with Express Mail label EQ230645495US that shows the package was enroute with the USPS on November 9, 2006. The same Express Mail label number is found on the original application cover sheet.

Paragraph (d) of 37 CFR 1.10 states that:

Any person filing correspondence under this section that was received by the Office and delivered by the "Express Mail Post Office to Addressee" service of the USPS, who can show that the "date-in" on the "Express Mail" mailing label or other official notation entered by the USPS was incorrectly entered or omitted by the USPS, may petition the Director to accord the correspondence a filing date as of the date the correspondence is shown to have been deposited with the USPS, provided that:

(1) The petition is filed promptly after the person becomes aware that the Office has accorded, or will accord, a filing date based upon an incorrect entry by the USPS;

(2) The number of the "Express Mail" mailing label was placed on the paper(s) or fee(s) that constitute the correspondence prior to the original mailing by "Express Mail"; and

(3) The petition includes a showing, which establishes to the satisfaction of the Director, that the requested filing date was the date the correspondence was deposited in "Express Mail Post Office to Addressee" service prior to the last scheduled pickup for that day. Any showing pursuant to this paragraph must be corroborated by evidence from the USPS or that came into being after deposit and within one business day of the deposit of the correspondence in the "Express Mail Post Office to Addressee" service of the USPS.

A grantable petition under 37 CFR 1.10(d) must include "a showing which establishes to the satisfaction of the Director that the requested filing date was the date the correspondence was deposited in "Express Mail Post Office to Addressee" service prior to the last scheduled pick-up for that day." In addition, the showing "must be corroborated by evidence from the USPS or that came into being after deposit and within one business day of the deposit of the correspondence in the 'Express Mail Post Office to Addressee' service of the USPS."

The petition filed April 26, 2007 (certificate of mailing date April 24, 2007), is accompanied by the corroborating evidence required by the rule. Accordingly, the petition is granted.

The application is being returned to the Office of Initial Patent Examination for correction of the filing date to **November 9, 2006** and the mailing of a corrected filing receipt.

Any inquiries related to this decision should be directed to the undersigned at (571) 272-3230.

Shirene Willis Brantley

Shirene Willis Brantley
Senior Petitions Attorney
Office of Petitions

UNITED STATES PATENT AND TRADEMARK OFFICE

UNITED STATES DEPARTMENT OF COMMERCE
United States Patent and Trademark Office
Address: COMMISSIONER FOR PATENTS
P.O. Box 1450
Alexandria, Virginia 22313-1450
www.uspto.gov

APPL NO.	FILING OR 371 (c) DATE	ART UNIT	FIL FEE REC'D	ATTY.DOCKET NO	DRAWINGS	TOT CLMS	IND CLMS
60/858,555	11/10/2006		100	COSM.003PR	16		

CONFIRMATION NO. 9753

CORRECTED FILING RECEIPT

OC000000021671286

20995
KNOBBE MARTENS OLSON & BEAR LLP
2040 MAIN STREET
FOURTEENTH FLOOR
IRVINE, CA 92614

Date Mailed: 12/19/2006

Receipt is acknowledged of this provisional Patent Application. It will not be examined for patentability and will become abandoned not later than twelve months after its filing date. Be sure to provide the U.S. APPLICATION NUMBER, FILING DATE, NAME OF APPLICANT, and TITLE OF INVENTION when inquiring about this application. Fees transmitted by check or draft are subject to collection. Please verify the accuracy of the data presented on this receipt. **If an error is noted on this Filing Receipt, please mail to the Commissioner for Patents P.O. Box 1450 Alexandria Va 22313-1450. Please provide a copy of this Filing Receipt with the changes noted thereon. If you received a "Notice to File Missing Parts" for this application, please submit any corrections to this Filing Receipt with your reply to the Notice. When the USPTO processes the reply to the Notice, the USPTO will generate another Filing Receipt incorporating the requested corrections (if appropriate).**

Applicant(s)

Cosmos Lyles, New York, NY;
Paul Dowd, Bronxville, NY;

Power of Attorney: The patent practitioners associated with Customer Number **20995**.

If Required, Foreign Filing License Granted: 11/27/2006

The country code and number of your priority application, to be used for filing abroad under the Paris Convention, is US60/858,555

Projected Publication Date: None, application is not eligible for pre-grant publication

Non-Publication Request: Not applicable

Early-Publication Request: Not applicable

**** SMALL ENTITY ****

Title

Stringed musical instrument employing spring

PROTECTING YOUR INVENTION OUTSIDE THE UNITED STATES

Since the rights granted by a U.S. patent extend only throughout the territory of the United States and have no effect in a foreign country, an inventor who wishes patent protection in another country must apply for a patent in a specific country or in regional patent offices. Applicants may wish to consider the filing of an international application under the Patent Cooperation Treaty (PCT). An international (PCT) application generally has the same effect as a regular national patent application in each PCT-member country. The PCT process **simplifies** the filing of patent applications on the same invention in member countries, but **does not result** in a grant of "an international patent" and does not eliminate the need of applicants to file additional documents and fees in countries where patent protection is desired.

Almost every country has its own patent law, and a person desiring a patent in a particular country must make an application for patent in that country in accordance with its particular laws. Since the laws of many countries differ in various respects from the patent law of the United States, applicants are advised to seek guidance from specific foreign countries to ensure that patent rights are not lost prematurely.

Applicants also are advised that in the case of inventions made in the United States, the Director of the USPTO must issue a license before applicants can apply for a patent in a foreign country. The filing of a U.S. patent application serves as a request for a foreign filing license. The application's filing receipt contains further information and guidance as to the status of applicant's license for foreign filing.

Applicants may wish to consult the USPTO booklet, "General Information Concerning Patents" (specifically, the section entitled "Treaties and Foreign Patents") for more information on timeframes and deadlines for filing foreign patent applications. The guide is available either by contacting the USPTO Contact Center at 800-786-9199, or it can be viewed on the USPTO website at http://www.uspto.gov/web/offices/pac/doc/general/index.html.

For information on preventing theft of your intellectual property (patents, trademarks and copyrights), you may wish to consult the U.S. Government website, http://www.stopfakes.gov. Part of a Department of Commerce initiative, this website includes self-help "toolkits" giving innovators guidance on how to protect intellectual property in specific countries such as China, Korea and Mexico. For questions regarding patent enforcement issues, applicants may call the U.S. Government hotline at 1-866-999-HALT (1-866-999-4158).

LICENSE FOR FOREIGN FILING UNDER
Title 35, United States Code, Section 184
Title 37, Code of Federal Regulations, 5.11 & 5.15

GRANTED

The applicant has been granted a license under 35 U.S.C. 184, if the phrase "IF REQUIRED, FOREIGN FILING LICENSE GRANTED" followed by a date appears on this form. Such licenses are issued in all applications where the conditions for issuance of a license have been met, regardless of whether or not a license may be required as set forth in 37 CFR 5.15. The scope and limitations of this license are set forth in 37 CFR 5.15(a) unless an earlier license has been issued under 37 CFR 5.15(b). The license is subject to revocation upon written notification. The date indicated is the effective date of the license, unless an earlier license of similar scope has been granted under 37 CFR 5.13 or 5.14.

This license is to be retained by the licensee and may be used at any time on or after the effective date thereof unless it is revoked. This license is automatically transferred to any related applications(s) filed under 37 CFR 1.53(d). This license is not retroactive.

The grant of a license does not in any way lessen the responsibility of a licensee for the security of the subject matter as imposed by any Government contract or the provisions of existing laws relating to espionage and the national security or the export of technical data. Licensees should apprise themselves of current regulations especially with respect to certain countries, of other agencies, particularly the Office of Defense Trade Controls, Department of State (with respect to Arms, Munitions and Implements of War (22 CFR 121-128)); the Bureau of

Industry and Security, Department of Commerce (15 CFR parts 730-774); the Office of Foreign Assets Control, Department of Treasury (31 CFR Parts 500+) and the Department of Energy.

NOT GRANTED

No license under 35 U.S.C. 184 has been granted at this time, if the phrase "IF REQUIRED, FOREIGN FILING LICENSE GRANTED" DOES NOT appear on this form. Applicant may still petition for a license under 37 CFR 5.12, if a license is desired before the expiration of 6 months from the filing date of the application. If 6 months has lapsed from the filing date of this application and the licensee has not received any indication of a secrecy order under 35 U.S.C. 181, the licensee may foreign file the application pursuant to 37 CFR 5.15(b).

UNITED STATES PATENT AND TRADEMARK OFFICE

Commissioner for Patents
United States Patent and Trademark Office
P.O. Box 1450
Alexandria, VA 22313-1450
www.uspto.gov

HOGAN & HARTSON LLP
IP GROUP, COLUMBIA SQUARE
555 THIRTEENTH STREET, N.W.
WASHINGTON, DC 20004

COPY MAILED

JUN 19 2007

OFFICE OF PETITIONS

In re Application of Theobald :
Application No. 60/858,711 : Decision on Petition
Filing Date: November 14, 2006 :
Attorney Docket No. 99920-0005 PROV :

This is a decision on the paper filed under 37 CFR 1.53(e) filed on January 29, 2007. The petition requests the above-identified provisional application be accorded a filing date of November 14, 2006.

The petition is **granted**.

The application was filed November 14, 2006.

The specification filed on November 14, 2006, described drawings containing Figures 1, 2, 3A, and 3B, but no drawings were filed on November 14, 2006.

On November 29, 2006, the Office mailed a Notice stating drawings had not been filed. The Notice stated a filing date had not been accorded and the filing date would be the date of receipt of drawings.

It is the practice of the PTO to treat a provisional application that contains at least some disclosure directed to a process or method as an application for which a drawing is <u>not</u> necessary for an understanding of the invention under 35 U.S.C. 113 (first sentence).

MPEP 601.01(f) states:

> A nonprovisional application having at least one claim, or a provisional application having at least some disclosure, directed to the subject matter discussed above for which a drawing is usually not considered essential for a filing date, describing drawing figure(s) in the specification, but filed without drawings will be treated as an application filed without all of the drawing figures referred to in the specification as discussed in MPEP § 601.01(g), so long as the application contains something that can be construed as a written description.

This application contains some disclosure directed to a process or method. Therefore, the application will be accorded a filing date of November 14, 2006.

Per 601.01(g), a Notice of Omitted Items rather than a Notice of Incomplete Application should have been mailed. The Notice of Omitted Items would have informed petitioner a filing date had been accorded and that the drawing figures referred to in the specification appeared to be missing.

In view of the above, the "Notice" mailed November 29, 2006, was mailed in error and is hereby withdrawn.

The application will be accorded the November 14, 2006, filing date without drawings as requested in the petition.

It should be noted that the claims filed in any subsequent non-provisional application will determine whether or not drawings are necessary for that application since the "subject matter sought to be patented" is determined by the claims in an application. Therefore, the instant decision should not be construed as a determination that drawings will or will not be necessary for a filing date for any future non-provisional applications.

The substitute specification will not be entered because an applicant may not amend a provisional application.

The petition fee of $400 has been credited to petitioner's deposit account.

The application is being returned to the Office of Initial Patent Examination for further processing with a filing date of November 14, 2006, and for indication in USPTO records that "0" sheets of drawings were present on filing.

Telephone inquiries regarding this communication should be directed to Petitions Attorney Steven Brantley at (571) 272-3203.

Charles Steven Brantley
Senior Petitions Attorney
Office of Petitions

UNITED STATES PATENT AND TRADEMARK OFFICE

Commissioner for Patents
United States Patent and Trademark Office
P.O. Box 1450
Alexandria, VA 22313-1450
www.uspto.gov

WENDEROTH, LIND & PONACK, L.L.P.
2033 K STREET N.W.
SUITE 800
WASHINGTON DC 20006-1021

COPY MAILED

FEB 12 2008

OFFICE OF PETITIONS

In re Application of	:	
Zhikai Wang et al	:	
Application No. 60/858,942	:	DECISION GRANTING PETITION
Filed: November 15, 2006	:	UNDER 37 CFR 1.137(b)
Attorney Docket No. PR06_1970A	:	

This is a decision on the petition under 37 CFR 1.137(b), filed July 23, 2007, to revive the above-identified application.

The petition is **GRANTED**.

The petition satisfies the conditions for revival pursuant to the provisions of 37 CFR 1.137(b) in that (1) the reply; (2) the petition fee; and (3) the required statement of unintentional delay have been received. Accordingly, the reply to the Notice To File Missing Parts Of Provisional Application of December 8, 2006, is accepted as having been unintentionally delayed.

Telephone inquiries concerning this decision should be directed to the undersigned at (571) 272-3208.

This matter is being referred to the Office of Patent Application Processing.

Karen Creasy
Petitions Examiner
Office of Petitions

UNITED STATES PATENT AND TRADEMARK OFFICE

Commissioner for Patents
United States Patent and Trademark Office
P.O. Box 1450
Alexandria, VA 22313-1450
www.uspto.gov

SILLS CUMMIS EPSTEIN & GROSS P.C.
ONE RIVERFRONT PLAZA
IP DEPARTMENT
NEWARK NJ 07102

COPY MAILED

JUN 01 2007

OFFICE OF PETITIONS

In re Application of :
Petra Budde :
Application No. 60/859,038 : DECISION ON PETITION
Filed: November 14, 2006 :
Attorney Docket No. 040025Pro011 :

This is a decision on the petition filed December 29, 2006, requesting that the above-identified application be accorded a filing date of November 14, 2006, with page 20 of the specification (description and claims).

The above-identified application was filed on November 14, 2006. However, on December 12, 2006, the Office of Initial Patent Examination mailed a "Notice of Omitted Item(s) in a Provisional Application," stating that the application had been accorded a filing date of November 14, 2006, and advising applicant that page 20 of the specification (description and claims) appeared to have been omitted.

In response, on December 29, 2006, applicant submitted the present petition, a copy of page 20, and the petition fee. Applicant acknowledges that page 20 was inadvertently omitted from the application papers as filed.

The Notice of Omitted Items provided applicant with the following options: 1) if applicant contends that the omitted items were in fact deposited in the USPTO, applicant must file a petition and a $400.00 petition filed **with evidence of such deposit, usually by way of a date-stamped postcard receipt**; or 2) if applicant fails to submit a petition and petition fee within TWO MONTHS of the date of the Notice, it will be treated as a constructive acceptance by applicant of the provisional application as deposited in the USPTO. Further, the application will include only those application papers present in the USPTO on the date of deposit.

Applicant admitted that page 20 was not present on filing, and therefore, cannot provide the Office with evidence of deposit on November 14, 2006. Accordingly, the Office correctly mailed the Notice of Omitted Item(s). Page 20 is not entitled to a filing date of November 14, 2006. Moreover, in view

of the relatively low filing fee for provisional applications, and the USPTO's desire to minimize the processing of provisional applications, the USPTO will not grant a petition under 37 CFR 1.182 to accept an omitted item (e.g. page of specification) and accord an application filing date as of the date of such submission in the provisional application. Applicant should simply file a new completed provisional application. MPEP 601.01(d). The petition is **DISMISSED**.

This matter will be referred to the Office of Initial Patent Examination to process the application with a filing date of November 14, 2006, using ONLY the application papers submitted on that date.

Any inquiries regarding this decision should be directed to the undersigned at (571) 272-3211.

Christina Tartera Donnell

Christina Tartera Donnell
Senior Petitions Attorney
Office of Petitions

UNITED STATES PATENT AND TRADEMARK OFFICE

UNITED STATES DEPARTMENT OF COMMERCE
United States Patent and Trademark Office
Address: COMMISSIONER FOR PATENTS
P.O. Box 1450
Alexandria, Virginia 22313-1450
www.uspto.gov

APPL NO.	FILING OR 371(c) DATE	ART UNIT	FIL FEE REC'D	ATTY.DOCKET NO	TOT CLMS	IND CLMS
60/859,389	11/14/2006		200	H0013252		

CONFIRMATION NO. 5084

CORRECTED FILING RECEIPT

OC000000023877970

128
HONEYWELL INTERNATIONAL INC.
101 COLUMBIA ROAD
P O BOX 2245
MORRISTOWN, NJ 07962-2245

Date Mailed: 05/15/2007

Receipt is acknowledged of this provisional Patent Application. It will not be examined for patentability and will become abandoned not later than twelve months after its filing date. Be sure to provide the U.S. APPLICATION NUMBER, FILING DATE, NAME OF APPLICANT, and TITLE OF INVENTION when inquiring about this application. Fees transmitted by check or draft are subject to collection. Please verify the accuracy of the data presented on this receipt. **If an error is noted on this Filing Receipt, please mail to the Commissioner for Patents P.O. Box 1450 Alexandria Va 22313-1450. Please provide a copy of this Filing Receipt with the changes noted thereon. If you received a "Notice to File Missing Parts" for this application, please submit any corrections to this Filing Receipt with your reply to the Notice. When the USPTO processes the reply to the Notice, the USPTO will generate another Filing Receipt incorporating the requested corrections (if appropriate).**

Applicant(s)

John K. Tillotson, Petoskey, MI;

Power of Attorney:

Paul Amrozowicz--45264

If Required, Foreign Filing License Granted: 11/30/2006

The country code and number of your priority application, to be used for filing abroad under the Paris Convention, is US60/859,389

Projected Publication Date: None, application is not eligible for pre-grant publication

Non-Publication Request: Not applicable

Early-Publication Request: Not applicable

Title

Active human-machine interface system without a force sensor

PROTECTING YOUR INVENTION OUTSIDE THE UNITED STATES

Since the rights granted by a U.S. patent extend only throughout the territory of the United States and have no effect in a foreign country, an inventor who wishes patent protection in another country must apply for a patent in a specific country or in regional patent offices. Applicants may wish to consider the filing of an international application under the Patent Cooperation Treaty (PCT). An international (PCT) application generally has the same effect as a regular national patent application in each PCT-member country. The PCT process **simplifies** the filing of patent applications on the same invention in member countries, but **does not result** in a grant of "an international patent" and does not eliminate the need of applicants to file additional documents and fees in countries where patent protection is desired.

Almost every country has its own patent law, and a person desiring a patent in a particular country must make an application for patent in that country in accordance with its particular laws. Since the laws of many countries differ in various respects from the patent law of the United States, applicants are advised to seek guidance from specific foreign countries to ensure that patent rights are not lost prematurely.

Applicants also are advised that in the case of inventions made in the United States, the Director of the USPTO must issue a license before applicants can apply for a patent in a foreign country. The filing of a U.S. patent application serves as a request for a foreign filing license. The application's filing receipt contains further information and guidance as to the status of applicant's license for foreign filing.

Applicants may wish to consult the USPTO booklet, "General Information Concerning Patents" (specifically, the section entitled "Treaties and Foreign Patents") for more information on timeframes and deadlines for filing foreign patent applications. The guide is available either by contacting the USPTO Contact Center at 800-786-9199, or it can be viewed on the USPTO website at http://www.uspto.gov/web/offices/pac/doc/general/index.html.

For information on preventing theft of your intellectual property (patents, trademarks and copyrights), you may wish to consult the U.S. Government website, http://www.stopfakes.gov. Part of a Department of Commerce initiative, this website includes self-help "toolkits" giving innovators guidance on how to protect intellectual property in specific countries such as China, Korea and Mexico. For questions regarding patent enforcement issues, applicants may call the U.S. Government hotline at 1-866-999-HALT (1-866-999-4158).

LICENSE FOR FOREIGN FILING UNDER
Title 35, United States Code, Section 184
Title 37, Code of Federal Regulations, 5.11 & 5.15

GRANTED

The applicant has been granted a license under 35 U.S.C. 184, if the phrase "IF REQUIRED, FOREIGN FILING LICENSE GRANTED" followed by a date appears on this form. Such licenses are issued in all applications where the conditions for issuance of a license have been met, regardless of whether or not a license may be required as set forth in 37 CFR 5.15. The scope and limitations of this license are set forth in 37 CFR 5.15(a) unless an earlier license has been issued under 37 CFR 5.15(b). The license is subject to revocation upon written notification. The date indicated is the effective date of the license, unless an earlier license of similar scope has been granted under 37 CFR 5.13 or 5.14.

This license is to be retained by the licensee and may be used at any time on or after the effective date thereof unless it is revoked. This license is automatically transferred to any related applications(s) filed under 37 CFR 1.53(d). This license is not retroactive.

The grant of a license does not in any way lessen the responsibility of a licensee for the security of the subject matter as imposed by any Government contract or the provisions of existing laws relating to espionage and the national security or the export of technical data. Licensees should apprise themselves of current regulations especially with respect to certain countries, of other agencies, particularly the Office of Defense Trade Controls, Department of State (with respect to Arms, Munitions and Implements of War (22 CFR 121-128)); the Bureau of

Industry and Security, Department of Commerce (15 CFR parts 730-774); the Office of Foreign Assets Control, Department of Treasury (31 CFR Parts 500+) and the Department of Energy.

NOT GRANTED

No license under 35 U.S.C. 184 has been granted at this time, if the phrase "IF REQUIRED, FOREIGN FILING LICENSE GRANTED" DOES NOT appear on this form. Applicant may still petition for a license under 37 CFR 5.12, if a license is desired before the expiration of 6 months from the filing date of the application. If 6 months has lapsed from the filing date of this application and the licensee has not received any indication of a secrecy order under 35 U.S.C. 181, the licensee may foreign file the application pursuant to 37 CFR 5.15(b).

UNITED STATES PATENT AND TRADEMARK OFFICE

UNITED STATES DEPARTMENT OF COMMERCE
United States Patent and Trademark Office
Address: COMMISSIONER FOR PATENTS
P.O. Box 1450
Alexandria, Virginia 22313-1450
www.uspto.gov

APPL NO.	FILING OR 371 (c) DATE	ART UNIT	FIL FEE REC'D	ATTY.DOCKET NO	DRAWINGS	TOT CLMS	IND CLMS
60/859,417	11/15/2006		200	S51-PR2	7		

CONFIRMATION NO. 4659

CORRECTED FILING RECEIPT

OC000000021596332

42997
SANGAMO BIOSCIENCES, INC.
501 CANAL BOULEVARD, SUITE A100
RICHMOND, CA 94804

Date Mailed: 12/13/2006

Receipt is acknowledged of this provisional Patent Application. It will not be examined for patentability and will become abandoned not later than twelve months after its filing date. Be sure to provide the U.S. APPLICATION NUMBER, FILING DATE, NAME OF APPLICANT, and TITLE OF INVENTION when inquiring about this application. Fees transmitted by check or draft are subject to collection. Please verify the accuracy of the data presented on this receipt. **If an error is noted on this Filing Receipt, please mail to the Commissioner for Patents P.O. Box 1450 Alexandria Va 22313-1450. Please provide a copy of this Filing Receipt with the changes noted thereon. If you received a "Notice to File Missing Parts" for this application, please submit any corrections to this Filing Receipt with your reply to the Notice. When the USPTO processes the reply to the Notice, the USPTO will generate another Filing Receipt incorporating the requested corrections (if appropriate).**

Applicant(s)

Dale Ando, Walnut Creek, CA;

Power of Attorney:

Sean Brennan--39917

If Required, Foreign Filing License Granted: 11/29/2006

The country code and number of your priority application, to be used for filing abroad under the Paris Convention, is US60/859,417

Projected Publication Date: None, application is not eligible for pre-grant publication

Non-Publication Request: Not applicable

Early-Publication Request: Not applicable

Title

Methods and compositions for modification of the human glucocorticoid receptor locus

PROTECTING YOUR INVENTION OUTSIDE THE UNITED STATES

Since the rights granted by a U.S. patent extend only throughout the territory of the United States and have no effect in a foreign country, an inventor who wishes patent protection in another country must apply for a patent in a specific country or in regional patent offices. Applicants may wish to consider the filing of an international application under the Patent Cooperation Treaty (PCT). An international (PCT) application generally has the same effect as a regular national patent application in each PCT-member country. The PCT process **simplifies** the filing of patent applications on the same invention in member countries, but **does not result** in a grant of "an international patent" and does not eliminate the need of applicants to file additional documents and fees in countries where patent protection is desired.

Almost every country has its own patent law, and a person desiring a patent in a particular country must make an application for patent in that country in accordance with its particular laws. Since the laws of many countries differ in various respects from the patent law of the United States, applicants are advised to seek guidance from specific foreign countries to ensure that patent rights are not lost prematurely.

Applicants also are advised that in the case of inventions made in the United States, the Director of the USPTO must issue a license before applicants can apply for a patent in a foreign country. The filing of a U.S. patent application serves as a request for a foreign filing license. The application's filing receipt contains further information and guidance as to the status of applicant's license for foreign filing.

Applicants may wish to consult the USPTO booklet, "General Information Concerning Patents" (specifically, the section entitled "Treaties and Foreign Patents") for more information on timeframes and deadlines for filing foreign patent applications. The guide is available either by contacting the USPTO Contact Center at 800-786-9199, or it can be viewed on the USPTO website at http://www.uspto.gov/web/offices/pac/doc/general/index.html.

For information on preventing theft of your intellectual property (patents, trademarks and copyrights), you may wish to consult the U.S. Government website, http://www.stopfakes.gov. Part of a Department of Commerce initiative, this website includes self-help "toolkits" giving innovators guidance on how to protect intellectual property in specific countries such as China, Korea and Mexico. For questions regarding patent enforcement issues, applicants may call the U.S. Government hotline at 1-866-999-HALT (1-866-999-4158).

LICENSE FOR FOREIGN FILING UNDER
Title 35, United States Code, Section 184
Title 37, Code of Federal Regulations, 5.11 & 5.15

GRANTED

The applicant has been granted a license under 35 U.S.C. 184, if the phrase "IF REQUIRED, FOREIGN FILING LICENSE GRANTED" followed by a date appears on this form. Such licenses are issued in all applications where the conditions for issuance of a license have been met, regardless of whether or not a license may be required as set forth in 37 CFR 5.15. The scope and limitations of this license are set forth in 37 CFR 5.15(a) unless an earlier license has been issued under 37 CFR 5.15(b). The license is subject to revocation upon written notification. The date indicated is the effective date of the license, unless an earlier license of similar scope has been granted under 37 CFR 5.13 or 5.14.

This license is to be retained by the licensee and may be used at any time on or after the effective date thereof unless it is revoked. This license is automatically transferred to any related applications(s) filed under 37 CFR 1.53(d). This license is not retroactive.

The grant of a license does not in any way lessen the responsibility of a licensee for the security of the subject matter as imposed by any Government contract or the provisions of existing laws relating to espionage and the national security or the export of technical data. Licensees should apprise themselves of current regulations especially with respect to certain countries, of other agencies, particularly the Office of Defense Trade Controls, Department of State (with respect to Arms, Munitions and Implements of War (22 CFR 121-128)); the Bureau of Industry and Security, Department of Commerce (15 CFR parts 730-774); the Office of Foreign Assets Control, Department of Treasury (31 CFR Parts 500+) and the Department of Energy.

NOT GRANTED

No license under 35 U.S.C. 184 has been granted at this time, if the phrase "IF REQUIRED, FOREIGN FILING LICENSE GRANTED" DOES NOT appear on this form. Applicant may still petition for a license under 37 CFR 5.12, if a license is desired before the expiration of 6 months from the filing date of the application. If 6 months has lapsed from the filing date of this application and the licensee has not received any indication of a secrecy order under 35 U.S.C. 181, the licensee may foreign file the application pursuant to 37 CFR 5.15(b).

UNITED STATES PATENT AND TRADEMARK OFFICE

UNITED STATES DEPARTMENT OF COMMERCE
United States Patent and Trademark Office
Address: COMMISSIONER FOR PATENTS
P.O. Box 1450
Alexandria, Virginia 22313-1450
www.uspto.gov

APPLICATION NUMBER	FILING OR 371(C) DATE	FIRST NAMED APPLICANT	ATTY. DOCKET NO./TITLE
60/860,226	11/21/2006	Mark N. Kraminer	006221-0005

CONFIRMATION NO. 7449

CONVERSION REQUEST

OC000000027774214

AIR MAIL
20559
ROBIC
CENTRE CDP CAPITAL
1001, VICTORIA SQUARE - BLOC E - 8TH FLOOR
MONTREAL, QC H2Z 2B7
CANADA

Date Mailed: 01/17/2008

DECISION DISMISSING REQUEST UNDER 37 CFR 1.53(c)(3) TO CONVERT TO NON-PROVISIONAL

This is a decision on the request under 37 CFR 1.53(c)(3) received in the U.S. Patent and Trademark Office on **11/26/2007,** to convert the above-identified application to a non-provisional application under 35 U.S.C. 111(a) and 37 CFR 1.53(b).

The request is dismissed because it does not comply with all the requirements of 37 CFR 1.53(c)(3).

A grantable request under 37 CFR 1.53(c)(3) to convert a provisional application to a non-provisional application must be accompanied by the fee set forth in 37 CFR 1.17(i) and an amendment including at least one claim if no claim is present in the provisional application and be filed prior to the earliest of: abandonment of the provisional application filed under 37 CFR 1.53(c) or expiration of twelve months after the filing date of the provisional application filed under 37 CFR 1.53(c). The present request is not grantable because:

It was received after the expiration of twelve months after the filing date of the provisional application.

Any request for reconsideration of this decision must be filed within TWO MONTHS of the date of this decision. This time limit may NOT be extended pursuant to 37 CFR 1.136. The request must be accompanied by the items noted above.

Any inquiries related to this decision should be directed to Customer Service at (571) 272-4000, or 1-800-PTO-9199.

A copy of this notice MUST be returned with the reply.

JANICE L TIPPETT
Office of Initial Patent Examination

UNITED STATES PATENT AND TRADEMARK OFFICE

COMMISSIONER FOR PATENTS
UNITED STATES PATENT AND TRADEMARK OFFICE
P.O. BOX 1450
ALEXANDRIA, VA 22313-1450
www.uspto.gov

COPY MAILED

APR 18 2008

OFFICE OF PETITIONS

ROBIC
CENTRE CDP CAPITAL
1001, VICTORIA SQUARE - BLOC E - 8TH FLOOR
MONTREAL QC H2Z 2B7 CA CANADA

In re Application of	:	
Mark N. Kramner	:	
Application No. 60/860,226	:	ON PETITION
Filed: November 21, 2006	:	
Attorney Docket No. **006221-0005**	:	

This is a decision in response to the petition under 37 CFR 1.137(b), filed by November 26, 2007, to revive the above-identified application. A supplemental petition was also filed on February 21, 2008.

The petition is **DISMISSED**.

A review of the record discloses that the one year anniversary of this provisional application ended on November 21, 2007. Petitioner requests that the application be revived for the purpose of converting the above provisional patent application to a nonprovisional application. However, it is noted that the present petition and the simultaneously filed request to convert the application was not filed until November 26, 2007. Subject to the provisions of 35 U.S.C. § 119(e)(3) and § 1.7(b), a provisional application will not be regarded as pending after twelve months from its filing date under any circumstances. Accordingly, the petition cannot be granted.

Telephone inquires related to this decision should be directed to the undersigned at (571) 272-3204.

Sherry D. Brinkley
Petitions Examiner
Office of Petitions

UNITED STATES PATENT AND TRADEMARK OFFICE

Commissioner for Patents
United States Patent and Trademark Office
P.O. Box 1450
Alexandria, VA 22313-1450
www.uspto.gov

FELIX WHITE JR
1272 W19 AVE
GARY IN 46401-1942

COPY MAILED

NOV 29 2007

OFFICE OF PETITIONS

In re Application of	:	
Felix White, Jr.	:	DECISION ON PETITION
Application No. 60/860,368	:	
Filed: November 21, 2006	:	
Title: 1 Man Pontoon Fishing Boat	:	

This is a decision on the petition to revive pursuant to 37 CFR 1.137(b), filed August 27, 2007.

The petition is **DISMISSED.**

Any request for reconsideration of this decision must be submitted within TWO (2) MONTHS from the mail date of this decision. Extensions of time under 37 CFR 1.136(a) are permitted. The reconsideration request should include a cover letter entitled "Renewed Petition Under 37 CFR 1.137(b)." No additional fee is due for a renewed petition. This is **not** a final agency decision within the meaning of 5 USC 704.

Applicant filed the application on November 21, 2006, and paid $130 for the filing fee. The filing did not include a written assertion of small entity status. The Office mailed a Notice to File Missing Parts of Provisional Application on December 4, 2006, requiring an additional $70 for the filing fee, or the written assertion of small entity status. This Notice set an extendable period for reply of two months. No reply to the Notice having been received, the application became abandoned on February 5, 2007. The Office mailed a Notice of Abandonment on August 8, 2007.

A grantable petition under 37 CFR 1.137(b) must be accompanied by: (1) the required reply, unless previously filed; (2) the petition fee as set forth in 37 CFR 1.17(m); (3) a statement that the entire delay in filing the required reply from the due date for the reply until the filing of a grantable petition pursuant to 37 CFR 1.137(b) was unintentional; and (4) any terminal disclaimer (and fee as set forth in 37 CFR 1.20(d)) required by 37 CFR 1.137(d).

The instant petition lacks item (2), the petition fee. The petition fee is required for the filing, and not merely the grant, of a petition. Accordingly, before the petition can even be considered on the merits, applicant must submit the petition fee, currently $770 for a small entity.

Further correspondence with respect to this matter should be addressed as follows:

By mail: Mail Stop Petitions
Commissioner for Patents
P.O. Box 1450
Alexandria VA 22313-1450

By FAX: (571)273-8300
Attn: Office of Petitions

Telephone inquiries related to this decision should be directed to the undersigned at (571)272-3207.

Cliff Congo
Petitions Attorney
Office of Petitions

UNITED STATES PATENT AND TRADEMARK OFFICE

Commissioner for Patents
United States Patent and Trademark Office
P.O. Box 1450
Alexandria, VA 22313-1450
www.uspto.gov

FELIX WHITE JR
1272 W19 AVE
GARY IN 46401-1942

COPY MAILED

JAN 25 2008

OFFICE OF PETITIONS

In re Application of	:	
Felix White, Jr.	:	DECISION ON PETITION
Application No. 60/860,368	:	
Filed: November 21, 2006	:	
Title: 1 Man Pontoon Fishing Boat	:	

This is a decision on the petition to revive pursuant to 37 CFR 1.137(b), filed December 26, 2007.

The petition is **DISMISSED**.

Any request for reconsideration of this decision must be submitted within TWO (2) MONTHS from the mail date of this decision. Extensions of time under 37 CFR 1.136(a) are permitted. The reconsideration request should include a cover letter entitled "Renewed Petition Under 37 CFR 1.137(b)." No additional fee is due for a renewed petition. This is **not** a final agency decision within the meaning of 5 USC 704.

Applicant filed the application on November 21, 2006, and paid $130 for the filing fee. The filing did not include a written assertion of small entity status. The Office mailed a Notice to File Missing Parts of Provisional Application on December 4, 2006, requiring an additional $70 for the filing fee, or the written assertion of small entity status. This Notice set an extendable period for reply of two months. No reply to the Notice having been received, the application became abandoned on February 5, 2007. The Office mailed a Notice of Abandonment on August 8, 2007. Applicant filed a petition to revive under

37 CFR 1.137(b) on August 27, 2007. However, the petition was dismissed in a decision mailed on November 29, 2007. The petition was dismissed without being considered on the merits because applicant did not pay the required $770 petition fee. The petition fee is required for the Office to consider the petition.

A grantable petition under 37 CFR 1.137(b) must be accompanied by: (1) the required reply, unless previously filed; (2) the petition fee as set forth in 37 CFR 1.17(m); (3) a statement that the entire delay in filing the required reply from the due date for the reply until the filing of a grantable petition pursuant to 37 CFR 1.137(b) was unintentional; and (4) any terminal disclaimer (and fee as set forth in 37 CFR 1.20(d)) required by 37 CFR 1.137(d).

The instant petition lacks item (1), the required reply. The application became abandoned because applicant did not submit $70 to complete the statutory basic filing fee (or alternatively, a written assertion of small entity status), and the $50 surcharge for the late submission of the filing fee (or written assertion of small entity status).

Further correspondence with respect to this matter should be addressed as follows:

By mail: Mail Stop Petitions
Commissioner for Patents
P.O. Box 1450
Alexandria VA 22313-1450

By FAX: (571)273-8300
Attn: Office of Petitions

Telephone inquiries related to this decision should be directed to the undersigned at (571)272-3207.

Cliff Congo
Petitions Attorney
Office of Petitions

UNITED STATES PATENT AND TRADEMARK OFFICE

Commissioner for Patents
United States Patent and Trademark Office
P.O. Box 1450
Alexandria, VA 22313-1450
www.uspto.gov

FELIX WHITE JR
1272 W19 AVE
GARY IN 46401-1942

COPY MAILED

JUN 30 2008

OFFICE OF PETITIONS

In re Application of	:	
Felix White, Jr.	:	DECISION ON PETITION
Application No. 60/860,368	:	
Filed: November 21, 2006	:	
Title: 1 Man Pontoon Fishing Boat	:	

This is a decision on the renwed petition to revive pursuant to 37 CFR 1.137(b), filed March 22, 2008.

The petition is **DISMISSED.**

Any request for reconsideration of this decision must be submitted within TWO (2) MONTHS from the mail date of this decision. Extensions of time under 37 CFR 1.136(a) are permitted. The reconsideration request should include a cover letter entitled "Renewed Petition Under 37 CFR 1.137(b)." No additional fee is due for a renewed petition. This is **not** a final agency decision within the meaning of 5 USC 704.

Applicant filed the application on November 21, 2006, and paid $130 for the filing fee. The filing did not include a written assertion of small entity status. The Office mailed a Notice to File Missing Parts of Provisional Application on December 4, 2006, requiring an additional $70 for the filing fee, or the written assertion of small entity status. This Notice set an extendable period for reply of two months. No reply to the Notice having been received, the application became abandoned on February 5, 2007. The Office mailed a Notice of Abandonment on August 8, 2007.

Applicant filed a petition to revive under 37 CFR 1.137(b) on August 27, 2007. However, the petition was dismissed in a decision mailed on November 29, 2007. The petition was dismissed without being considered on the merits because applicant did not pay the required $770 petition fee. The petition fee is required for the Office to consider the petition. Applicant filed a renewed petition on December 26, 2007, this time with the petition filing fee. However, the petition was dismissed in a decision mailed on January 25, 2008. The petition did not include the required reply (here, a $50 surcharge and either a written assertion of small entity status or $70).

With the instant renewed petition, petitioner has submitted $250, together with a statement that the application is entitled to small entity status. However, the instant petition is not signed. Pursuant to 37 CFR 1.4(d), each piece of correspondence must be signed.

Accordingly, on renewed petition, petitioner must provide the office with a signed petition. No further fee is required.

Further correspondence with respect to this matter should be addressed as follows:

By mail: Mail Stop Petitions
Commissioner for Patents
P.O. Box 1450
Alexandria VA 22313-1450

By FAX: (571)273-8300
Attn: Office of Petitions

Telephone inquiries related to this decision should be directed to the undersigned at (571)272-3207.

Cliff Congo
Petitions Attorney
Office of Petitions

UNITED STATES PATENT AND TRADEMARK OFFICE

Commissioner for Patents
United States Patent and Trademark Office
P.O. Box 1450
Alexandria, VA 22313-1450
www.uspto.gov

FELIX WHITE JR
1272 W19 AVE
GARY IN 46401-1942

COPY MAILED
OCT 10 2008
OFFICE OF PETITIONS

In re Application of	:	
Felix White, Jr.	:	DECISION ON PETITION
Application No. 60/860,368	:	
Filed: November 21, 2006	:	
Title: 1 Man Pontoon Fishing Boat	:	

This is a decision on the renewed petition to revive pursuant to 37 CFR 1.137(b), filed September 2, 2008.

The petition is **GRANTED**.

Applicant filed the application on November 21, 2006, and paid $130 for the filing fee. The filing did not include a written assertion of small entity status. The Office mailed a Notice to File Missing Parts of Provisional Application on December 4, 2006, requiring an additional $70 for the filing fee, or the written assertion of small entity status. This Notice set an extendable period for reply of two months. No reply to the Notice having been received, the application became abandoned on February 5, 2007. The Office mailed a Notice of Abandonment on August 8, 2007.

Applicant filed a petition to revive under 37 CFR 1.137(b) on August 27, 2007. However, the petition was dismissed in a decision mailed on November 29, 2007. The petition was dismissed without being considered on the merits because applicant did not pay the required $770 petition fee. The petition fee is required for the Office to consider the petition. Applicant filed a renewed petition on December 26, 2007, this time with the

petition filing fee. However, the petition was dismissed in a decision mailed on January 25, 2008. The petition did not include the required reply (here, a $50 surcharge and either a written assertion of small entity status or $70).

In a renewed petition filed March 22, 2008, petitioner submitted $250, together with a statement that the application is entitled to small entity status. However, as the instant petition was not signed, it was dismissed in a decision mailed on June 30, 2008.

With the instant petition, petitioner has filed a signed petition. The other requirements for a grantable petition under 37 CFR 1.137(b) were previously satisfied in the earlier filed petitions.

The application is being forwarded to the Office of Patent Application Processing for pre-examination processing.

Telephone inquiries related to this decision should be directed to the undersigned at (571)272-3207.

Cliff Congo
Petitions Attorney
Office of Petitions

UNITED STATES PATENT AND TRADEMARK OFFICE

Commissioner for Patents
United States Patent and Trademark Office
P.O. Box 1450
Alexandria, VA 22313-1450
www.uspto.gov

Fasken, Martineau DuMoulin, LLP
2100 – 1075 West Georgia Street
Vancouver, BC V6E 3G2 CA
Canada

COPY MAILED

JUN 0 5 2008

OFFICE OF PETITIONS

In re Application of
Kristina Yvonne Nelson
Application No. 60/860,457
Filed: November 22, 2006
Attorney Docket No. 265894.00004

DECISION ON PETITION

This is a decision on the petition under the unintentional provisions of 37 CFR 1.137(b), filed October 5, 2007, to revive the above-identified application.

The petition is **GRANTED**.

The application became abandoned for failure to reply in a timely manner to the Notice to File Missing Parts of Provisional Application (Notice), mailed December 5, 2006. The Notice set a period for reply of two (2) months from the mail date of the Notice. No extensions of time under the provisions of 37 CFR 1.136(a) were obtained. Accordingly the application became abandoned on February 6, 2007. A Notice of Abandonment was mailed on August 8, 2007.

The petition satisfies the requirements of 37 CFR 1.137(b) in that petitioner has supplied (1) the reply in the form of a provisional application cover sheet, and a $25 surcharge fee (2) the petition fee of $770, and (3) a proper statement of unintentional delay.

It is not apparent whether the person signing the statement of unintentional delay was in a position to have firsthand or direct knowledge of the facts and circumstances of the delay at issue. Nevertheless, such statement is being treated as having been made as the result of a reasonable inquiry into the facts and circumstances of such delay. See 37 CFR 10.18(b) and Changes to Patent Practice and Procedure; Final Rule Notice, 62 Fed. Reg. 53131, 53178 (October 10, 1997), 1203 Off. Gaz. Pat. Office 63, 103 (October 21, 1997). In the event that such an inquiry has not been made, petitioner must make such an inquiry. If such inquiry results in the discovery that it is not correct that the entire delay in filing the required reply from the due date for the reply until the filing of a grantable petition pursuant to 37 CFR 1.137(b) was unintentional, petitioner must notify the Office.

There is no indication that the person signing the instant petition was ever given a power of attorney or authorization of agent to prosecute the above-identified application. However, in accordance with 37 CFR 1.34(a), the signature appearing on the petition shall constitute a representation to the United States Patent and Trademark Office that he/she is authorized to represent the particular party in whose behalf he/she acts.

Telephone inquiries concerning this decision should be directed to Kimberly Inabinet at (571) 272-4618.

Andrea Smith
Petitions Examiner
Office of Petitions

UNITED STATES PATENT AND TRADEMARK OFFICE

Commissioner for Patents
United States Patent and Trademark Office
P.O. Box 1450
Alexandria, VA22313-1450
www.uspto.gov

BARILAN RESEARCH &
DEVELOPMENT COMP. LTD.
BARILAN UNIVERSITY
RAMAT GAN 52900 IL ISRAEL

COPY MAILED

MAR 1 3 2007

OFFICE OF PETITIONS

In re Application of	:
Gal Yadid et al.	:
Application No. 60/860,505	: DECISION GRANTING PETITION
Filed: November 22, 2006	:
Attorney Docket No. BAR ILAN 204	:

This is a decision on the petition filed January 22, 2007, which is treated under 37 CFR 1.53, requesting that the above-identified provisional application be accorded a filing date of November 22, 2006.

The petition under 37 CFR 1.53(e) is **GRANTED**.

The application was filed on November 22, 2006, without drawings. Accordingly, on December 5, 2006, the Office of Initial Patent Examination mailed a "Notice of Incomplete Provisional Application" stating that the application had been deposited without drawings.

The present petition argues that drawings are not necessary for an understanding of the subject matter sought to be patented, and requests that the application be accorded a filing date of November 22, 2006.

Based on petitioners argument, this application will be accorded a filing date of November 22, 2006. Petitioner is advised, however, that this decision does not constitute a determination in accordance with 35 U.S.C. § 113 (first sentence). However, the "Notice" was correct in stating that the application appeared to have been incomplete. Thus, the petition fee in the amount of $400.00 has been charged to petitioner's credit card.

The application will be processed for filing date purposes using only the application papers present on November 28, 2005. The drawings filed with the present petition will not be processed as a part of the original disclosure, but will be retained in the

application file. Petitioner is reminded that no amendment/corrections, other than to make the provisional application comply with the patent statute and all applicable regulations, may be made to a provisional application after the filing date of the provisional application. See 37 CFR 1.53(c); 37 CFR 1.121(j). As such, if petitioners desire to have the drawings submitted with the instant petition included, petitioners should simply file a new completed provisional application.

Petitioner is advised that while dual representation by way of a petition under 37 CFR 1.182 is permitted, dual correspondence is not permitted, and will not be undertaken by the PTO. The power of attorney filed on even date with the instant petition is filed by only one inventor, Gal Yadid, and thus purports to give the power of attorney on behalf of Gal Yadid and not the other inventors. If in fact this is petitioner's intention a petition under 37 CFR 1.182 for acceptance of a power of attorney by less than all the applicants will need to be filed, otherwise all inventors will need to sign the power of attorney or show that Gal Yadid has the authority to sign on behalf of all inventors. In view thereof, the power of attorney cannot be accepted.

This matter is being referred to the Office of Initial Patent Examination for processing with a filing date of November 22, 2006, using only the application papers filed on that date, and for an indication on the bib-data sheet that no (0) sheets of drawings were present on filing.

Telephone inquiries regarding this decision should be directed to the undersigned Petitions Attorney at (571) 272-3212.

Patricia Faison-Ball

Patricia Faison-Ball
Senior Petitions Attorney
Office of Petitions

UNITED STATES PATENT AND TRADEMARK OFFICE

Commissioner for Patents
United States Patent and Trademark Office
P.O. Box 1450
Alexandria, VA 22313-1450
www.uspto.gov
DW Feb-08

GOWLING, LAFLEUR HENDERSON LLP
ONE MAIN STREET WEST
HAMILTON ON L8P 4Z5 CA CANADA

COPY MAILED

FEB 25 2008

OFFICE OF PETITIONS

In re Application of	:	
Warren Foster	:	
Application No. 60/860,794	:	ON PETITION
Filed: November 24, 2006	:	
Atty Docket No. H310934US	:	

This is a decision on the petition under 37 CFR 1.53, filed June 20, 2007, requesting that the above-identified provisional application be accorded a filing date of November 24, 2006.

The petition is **GRANTED**.

The application was filed on November 24, 2006, without drawings. Accordingly, on December 5, 2006, Initial Patent Examination Division mailed a Notice of Incomplete Provisional Application stating that the application had been deposited without drawings.

Petitioner states that two drawings were submitted on January 31, 2007, in response to a Completion Requirement. Petitioner also states that on March 26, 2007, a request was filed to withdraw the drawings submitted on January 31, 2007, and a filing date of November 24, 2006 for the above application.

On June 20, 2007, the present petition was filed. Petitioners argue that drawings are not necessary for an understanding of the subject matter sought to be patented, and so request that the application be accorded a filing date of November 24, 2006, without drawings.

As stated in MPEP 601.01(f), it is the practice of the PTO to treat a provisional application that contains at least some disclosure of a process or method as an application for which a drawing is not necessary for an understanding of the invention under 35 U.S.C. 113 (first sentence).

MPEP 601.01(f) also states that:

> A nonprovisional application having at least one claim, or a provisional application having at least some disclosure, directed to the subject matter discussed above for which a drawing is usually not considered essential for a filing date, describing drawing figure(s) in the specification, but filed without drawings will be treated as an application filed without all of the drawing figures referred to in the specification as discussed in MPEP 601.01(g), so long as the application contains something that can be construed as a written description and the names of all the inventors.

A review of the official file reveals that the application includes one (1) method claim. Therefore, this application contains disclosure relating to a process or method.

In view of the above, the "Notice" mailed December 5, 2006, was mailed in error and is hereby withdrawn.

The application is accorded a filing date of November 24, 2006, without drawings as a part of the original disclosure. The petition fee paid of $400.00 will be credited to counsel's deposit account.

This matter is being referred to the Office of Patent Application Processing for processing with a filing date of November 24, 2006, using only the application papers filed on that date.

Telephone inquiries specific to this matter should be directed to the undersigned at 571 272-3208.

Karen Creasy

Karen Creasy
Petitions Examiner
Office of Petitions

UNITED STATES PATENT AND TRADEMARK OFFICE

UNITED STATES DEPARTMENT OF COMMERCE
United States Patent and Trademark Office
Address: COMMISSIONER FOR PATENTS
P.O. Box 1450
Alexandria, Virginia 22313-1450
www.uspto.gov

APPL NO.	FILING OR 371 (c) DATE	ART UNIT	FIL FEE REC'D	ATTY.DOCKET NO	DRAWINGS	TOT CLMS	IND CLMS
60/860,853	11/21/2006		100	11836-005-888	14		

CONFIRMATION NO. 2141

CORRECTED FILING RECEIPT

OC000000022020202

20583
JONES DAY
222 EAST 41ST ST
NEW YORK, NY 10017

Date Mailed: 01/17/2007

Receipt is acknowledged of this provisional Patent Application. It will not be examined for patentability and will become abandoned not later than twelve months after its filing date. Be sure to provide the U.S. APPLICATION NUMBER, FILING DATE, NAME OF APPLICANT, and TITLE OF INVENTION when inquiring about this application. Fees transmitted by check or draft are subject to collection. Please verify the accuracy of the data presented on this receipt. **If an error is noted on this Filing Receipt, please mail to the Commissioner for Patents P.O. Box 1450 Alexandria Va 22313-1450. Please provide a copy of this Filing Receipt with the changes noted thereon. If you received a "Notice to File Missing Parts" for this application, please submit any corrections to this Filing Receipt with your reply to the Notice. When the USPTO processes the reply to the Notice, the USPTO will generate another Filing Receipt incorporating the requested corrections (if appropriate).**

Applicant(s)

Neil S. Renninger, Oakland, CA;

Power of Attorney:

Anthony Insogna--35203
Rahul Pathak--42983

Projected Publication Date: None, application is not eligible for pre-grant publication

Non-Publication Request: Not applicable

Early-Publication Request: Not applicable

**** SMALL ENTITY ****

Title

Fuel components, fuel compositions and methods of making and using same

PROTECTING YOUR INVENTION OUTSIDE THE UNITED STATES

Since the rights granted by a U.S. patent extend only throughout the territory of the United States and have no

effect in a foreign country, an inventor who wishes patent protection in another country must apply for a patent in a specific country or in regional patent offices. Applicants may wish to consider the filing of an international application under the Patent Cooperation Treaty (PCT). An international (PCT) application generally has the same effect as a regular national patent application in each PCT-member country. The PCT process **simplifies** the filing of patent applications on the same invention in member countries, but **does not result** in a grant of "an international patent" and does not eliminate the need of applicants to file additional documents and fees in countries where patent protection is desired.

Almost every country has its own patent law, and a person desiring a patent in a particular country must make an application for patent in that country in accordance with its particular laws. Since the laws of many countries differ in various respects from the patent law of the United States, applicants are advised to seek guidance from specific foreign countries to ensure that patent rights are not lost prematurely.

Applicants also are advised that in the case of inventions made in the United States, the Director of the USPTO must issue a license before applicants can apply for a patent in a foreign country. The filing of a U.S. patent application serves as a request for a foreign filing license. The application's filing receipt contains further information and guidance as to the status of applicant's license for foreign filing.

Applicants may wish to consult the USPTO booklet, "General Information Concerning Patents" (specifically, the section entitled "Treaties and Foreign Patents") for more information on timeframes and deadlines for filing foreign patent applications. The guide is available either by contacting the USPTO Contact Center at 800-786-9199, or it can be viewed on the USPTO website at http://www.uspto.gov/web/offices/pac/doc/general/index.html.

For information on preventing theft of your intellectual property (patents, trademarks and copyrights), you may wish to consult the U.S. Government website, http://www.stopfakes.gov. Part of a Department of Commerce initiative, this website includes self-help "toolkits" giving innovators guidance on how to protect intellectual property in specific countries such as China, Korea and Mexico. For questions regarding patent enforcement issues, applicants may call the U.S. Government hotline at 1-866-999-HALT (1-866-999-4158).

LICENSE FOR FOREIGN FILING UNDER
Title 35, United States Code, Section 184
Title 37, Code of Federal Regulations, 5.11 & 5.15

GRANTED

The applicant has been granted a license under 35 U.S.C. 184, if the phrase "IF REQUIRED, FOREIGN FILING LICENSE GRANTED" followed by a date appears on this form. Such licenses are issued in all applications where the conditions for issuance of a license have been met, regardless of whether or not a license may be required as set forth in 37 CFR 5.15. The scope and limitations of this license are set forth in 37 CFR 5.15(a) unless an earlier license has been issued under 37 CFR 5.15(b). The license is subject to revocation upon written notification. The date indicated is the effective date of the license, unless an earlier license of similar scope has been granted under 37 CFR 5.13 or 5.14.

This license is to be retained by the licensee and may be used at any time on or after the effective date thereof unless it is revoked. This license is automatically transferred to any related applications(s) filed under 37 CFR 1.53(d). This license is not retroactive.

The grant of a license does not in any way lessen the responsibility of a licensee for the security of the subject matter as imposed by any Government contract or the provisions of existing laws relating to espionage and the national security or the export of technical data. Licensees should apprise themselves of current regulations especially with respect to certain countries, of other agencies, particularly the Office of Defense Trade Controls, Department of State (with respect to Arms, Munitions and Implements of War (22 CFR 121-128)); the Bureau of Industry and Security, Department of Commerce (15 CFR parts 730-774); the Office of Foreign Assets Control, Department of Treasury (31 CFR Parts 500+) and the Department of Energy.

NOT GRANTED

No license under 35 U.S.C. 184 has been granted at this time, if the phrase "IF REQUIRED, FOREIGN FILING LICENSE GRANTED" DOES NOT appear on this form. Applicant may still petition for a license under 37 CFR 5.12, if a license is desired before the expiration of 6 months from the filing date of the application. If 6 months has lapsed from the filing date of this application and the licensee has not received any indication of a secrecy order under 35 U.S.C. 181, the licensee may foreign file the application pursuant to 37 CFR 5.15(b).

UNITED STATES PATENT AND TRADEMARK OFFICE

COMMISSIONER FOR PATENTS
UNITED STATES PATENT AND TRADEMARK OFFICE
P.O. BOX 1450
ALEXANDRIA, VA 22313-1450
www.uspto.gov

Paper No.

Daniel F. Cahill
112 Hill Street
Stoneham MA 02180

COPY MAILED
APR 18 2007
OFFICE OF PETITIONS

In re Application of :
Daniel Cahill :
Application No. 60/860,857 : ON PETITION
Filed: January 5, 2007 :
For: MAILBOX SNOW DEFLECTOR :

This is in response to the response filed January 5, 2007 to Notice to File Missing Parts of Application mailed December 1, 2006. The response is treated as a petition because it included payment of the $400 petition fee. However, no petitionable matter was set forth. The response did not include an assertion that the missing items were submitted on original filing or that the items are unnecessary for a filing date. More importantly, this response was filed by attorney at law Christopher G. Fallon, Esq. on behalf of applicant Daniel Cahill.

For the reasons stated herein, the petition is **DISMISSED without consideration on the merits.**

Any request for reconsideration must be submitted within **TWO (2) MONTHS** from the mail date of this decision. Extensions of time under 37 C.F.R. §1.136(a) are not permitted. See 1.181(f).

An applicant for patent may file and prosecute his or her own case, or he or she may give a power of attorney so as to be represented by one or more patent practitioners or joint inventors. 37 CFR § 1.31 Nonetheless, only practitioners who are registered under § 11.6 or individuals given limited recognition under § 11.9(a) or (b) are permitted to prosecute

patent applications of others before the Office; or represent others in any proceedings before the Office. 37 CFR § 11.10(a)

Accordingly, 37 CFR 1.33(b) provides that:

Amendments and other papers, except for written assertions pursuant to § 1.27(c)(2)(ii) of this part, filed in the application must be signed by:

> (1) A patent practitioner of record appointed in compliance with § 1.32(b);
> (2) A patent practitioner not of record who acts in a representative capacity under the provisions of § 1.34;
> (3) An assignee as provided for under § 3.71(b) of this chapter; or
> (4) All of the applicants (§ 1.41(b)) for patent, unless there is an assignee of the entire interest and such assignee has taken action in the application in accordance with § 3.71 of this chapter.

The instant request appears to be signed by an attorney who is not a patent practitioner. As such, the petition cannot be accepted. For consideration of this matter, either a petition signed by a proper party must be submitted or a showing that attorney Fallon is a patent practitioner (e.g., registered as a patent attorney to practice before the Office) or otherwise qualified to represent the applicant, Mr. Cahill, in patent matters must be provided.

Further correspondence with respect to this decision should be addressed as follows:

By mail:	Mail Stop Petition Commissioner for Patents P.O. Box 1450 Alexandria, VA 22313-1450
By fax:	(571) 273-8300 ATTN: Office of Petitions
By hand:	Customer Service Window Randolph Building 401 Dulany Street Alexandria, VA 22314

Telephone inquiries concerning this decision should be directed to the undersigned at (571) 272-3219.

Nancy Johnson
Senior Petitions Attorney
Office of Petitions

cc: Christopher G. Fallon
Attorney at Law
15 Ferry Street
Malden, MA 02148