UNITED STATES PATENT AND TRADEMARK OFFICE

Commissioner for Patents
United States Patent and Trademark Office
P.O. Box 1450
Alexandria, VA 22313-1450
www.uspto.gov

BEN D TOBOR
BRACEWELL & PATTERSON, LLP
POST OFFICE BOX 61389
HOUSTON TX 77208-1389

MAILED

OCT 12 2010

OFFICE OF PETITIONS

In re Application of :
MALCHOW, Gregory L. et al. :
Application No. 09/339,412 : DECISION ON PETITION
Filed: June 25, 1999 : TO WITHDRAW
Attorney Docket No. **2626.252/BDT** : FROM RECORD
:

This is a decision on the Request to Withdraw as attorney or agent of record under 37 C.F.R. § 1.36(b), filed September 22, 2010.

The request is **NOT APPROVED**.

The Office has revised its change in procedure for request to withdraw from representation applies to requests filed on or after May 12, 2008.

The Office will no longer accept address changes to a new practitioner or law firm filed with a Request, absent the filing of a power of attorney to the new representative. The Office will either change the correspondence address of record to the most current address information provided for the assignee of the entire interest who properly became of record under 37 CFR 3.71 or, if no assignee of the entire interest has properly been made of record under 37 CFR 3.71, the most current address information provided for the first named inventor.

Accordingly, the request to withdraw from record cannot be approved because the request to change the correspondence address is not that of: (1) the first named inventor; or (2) an assignee of the entire interest under 37 C.F.R 3.71 who has properly intervened.

If an assignee has intervened in this application, then a Statement under 37 CFR 3.73(b) or a copy of the actual assignment must be submitted with a renewed request.

The customer number provided is not listed in our data base.

All future communications from the Office will continue to be directed to the above-listed address until otherwise notified by applicant.

Telephone inquiries concerning this decision should be directed to Tredelle Jackson at 571-272-2783.

/Tredelle D. Jackson/
Paralegal Specialist
Office of Petitions

cc: **AMANA COMPANY, L.P.**
2800 220TH TRAIL
AMANA IA 52204-0001

UNITED STATES PATENT AND TRADEMARK OFFICE

Commissioner for Patents
United States Patent and Trademark Office
P.O. Box 1450
Alexandria, VA 22313-1450
www.uspto.gov

In re Patent No. 6234098
Issue Date: May 22,2001
Application No. 09340267
Filed: June 25,1999
Attorney Docket No. HAR0023-01

:
:DECISION GRANTING PETITION
:UNDER 37 CFR 1.378(c)
:

This is a decision on the electronic petition, filed February 23,2011 ,under 37 CFR 1.378(c) to accept the unintentionally delayed payment of the 7.5 year maintenance fee for the above-identified patent.

The petition is **GRANTED**.

The maintenance fee is accepted, and the above-identified patent reinstated as of February 23,2011 . This decision also constitutes notice that the fee has been accepted. An electronic copy of the petition and this decision has been created as an entry in the Image File Wrapper. Nevertheless, petitioner should print and retain an independent copy.

Telephone inquiries related to this electronic decision should be directed to the Electronic Business Center at 1-866-217-9197.

PTO/SB/66 (03-09)
Approved for use through 03/31/2012. OMB 0651-0016
U.S. Patent and Trademark Office: U.S. DEPARTMENT OF COMMERCE
Under the Paperwork Reduction Act of 1995, no persons are required to respond to a collection of information unless it displays valid OMB control number.

PETITION TO ACCEPT UNINTENTIONALLY DELAYED PAYMENT OF MAINTENANCE FEE IN AN EXPIRED PATENT (37 CFR 1.378(c))

Patent Number	Issue Date (YYYY-MM-DD)	Application Number	Filing Date (YYYY-MM-DD)	Docket Number (if applicable)
6234098	2001-05-22	09340267	1999-06-25	9567.4822

CAUTION: Maintenance fee (and surcharge, if any) payment must correctly identify: (1) the patent number and (2) the application number of the actual U.S. application leading to issuance of that patent to ensure the fee(s) is/are associated with the correct patent. 37 CFR 1.366(c) and (d).

SMALL ENTITY

☐ Patentee claims, or has previously claimed, small entity status. See 37 CFR 1.27.

LOSS OF ENTITLEMENT TO SMALL ENTITY STATUS

☒ Patentee is no longer entitled to small entity status. See 37 CFR 1.27(g)

NOT Small Entity			Small Entity		
	Fee	Code		Fee	Code
○	3 ½ year	(1551)	○	3 ½ year	(2551)
◉	7 ½ year	(1552)	○	7 ½ year	(2552)
○	11 ½ year	(1553)	○	11 ½ year	(2553)

SURCHARGE

The surcharge required by 37 CFR 1.20(i)(2) (Fee Code 1558) must be paid as a condition of accepting unintentionally delayed payment of the maintenance fee.

MAINTENANCE FEE (37 CFR 1.20(e)-(g))

The appropriate maintenance fee must be submitted with this petition.

STATEMENT

THE UNDERSIGNED CERTIFIES THAT THE DELAY IN PAYMENT OF THE MAINTENANCE FEE TO THIS PATENT WAS UNINTENTIONAL

PETITIONER(S) REQUEST THAT THE DELAYED PAYMENT OF THE MAINTENANCE FEE BE ACCEPTED AND THE PATENT REINSTATED

THIS PORTION MUST BE COMPLETED BY THE SIGNATORY OR SIGNATORIES

37 CFR 1.378(d) states: "Any petition under this section must be signed by an attorney or agent registered to practice before the Patent and Trademark Office, or by the patentee, the assignee, or other party in interest."

I certify, in accordance with 37 CFR 1.4(d)(4) that I am

◉ An attorney or agent registered to practice before the Patent and Trademark Office

○ A sole patentee

○ A joint patentee; I certify that I am authorized to sign this submission on behalf of all the other patentees.

○ A joint patentee; all of whom are signing this e-petition

○ The assignee of record of the entire interest

PTO/SB/66 (03-09)
Approved for use through 03/31/2012. OMB 0651-0016
U.S. Patent and Trademark Office: U.S. DEPARTMENT OF COMMERCE
Under the Paperwork Reduction Act of 1995, no persons are required to respond to a collection of information unless it displays valid OMB control number.

Patent Practitioner			
A signature of the applicant or representative is required in accordance with 37 CFR 1.33 and 10.18. Please see 37 CFR 1.4(d) for the form of the signature			
Signature	/dale paul dimaggio/	Date (YYYY-MM-DD)	2011-02-23
Name	Dale Paul DiMaggio	Registration Number	31823

This collection of information is required by 37 CFR 1.378(c). The information is required to obtain or retain a benefit by the public which is to file (and by the USPTO to process) an application. Confidentiality is governed by 35 U.S.C. 122 and 37 CFR 1.11 and 1.14. This collection is estimated to take 1 hour to complete, including gathering, preparing, and submitting the completed application form to the USPTO. Time will vary depending upon the individual case. Any comments on the amount of time you require to complete this form and/ or suggestions for reducing this burden, should be sent to the Chief Information Officer, U.S. Patent and Trademark Office, U.S. Department of Commerce, P.O. Box 1450, Alexandria, VA 22313-1450. DO NOT SEND FEES OR COMPLETED FORMS TO THIS ADDRESS. **This form can only be used when in conjunction with EFS-Web. If this form is mailed to the USPTO, it may cause delays in reinstating the patent.**

Privacy Act Statement

The Privacy Act of 1974 (P.L. 93-579) requires that you be given certain information in connection with your submission of the attached form related to a patent application or patent. Accordingly, pursuant to the requirements of the Act, please be advised that: (1) the general authority for the collection of this information is 35 U.S.C. 2(b)(2); (2) furnishing of the information solicited is voluntary; and (3) the principal purpose for which the information is used by the U.S. Patent and Trademark Office is to process and/or examine your submission related to a patent application or patent. If you do not furnish the requested information, the U.S. Patent and Trademark Office may not be able to process and/or examine your submission, which may result in termination of proceedings or abandonment of the application or expiration of the patent.

The information provided by you in this form will be subject to the following routine uses:

1. The information on this form will be treated confidentially to the extent allowed under the Freedom of Information Act (5 U.S.C. 552) and the Privacy Act (5 U.S.C. 552a). Records from this system of records may be disclosed to the Department of Justice to determine whether the Freedom of Information Act requires disclosure of these records.

2. A record from this system of records may be disclosed, as a routine use, in the course of presenting evidence to a court, magistrate, or administrative tribunal, including disclosures to opposing counsel in the course of settlement negotiations.

3. A record in this system of records may be disclosed, as a routine use, to a Member of Congress submitting a request involving an individual, to whom the record pertains, when the individual has requested assistance from the Member with respect to the subject matter of the record.

4. A record in this system of records may be disclosed, as a routine use, to a contractor of the Agency having need for the information in order to perform a contract. Recipients of information shall be required to comply with the requirements of the Privacy Act of 1974, as amended, pursuant to 5 U.S.C. 552a(m).

5. A record related to an International Application filed under the Patent Cooperation Treaty in this system of records may be disclosed, as a routine use, to the International Bureau of the World Intellectual Property Organization, pursuant to the Patent Cooperation Treaty.

6. A record in this system of records may be disclosed, as a routine use, to another federal agency for purposes of National Security review (35 U.S.C. 181) and for review pursuant to the Atomic Energy Act (42 U.S.C. 218(c)).

7. A record from this system of records may be disclosed, as a routine use, to the Administrator, General Services, or his/her designee, during an inspection of records conducted by GSA as part of that agency's responsibility to recommend improvements in records management practices and programs, under authority of 44 U.S.C. 2904 and 2906. Such disclosure shall be made in accordance with the GSA regulations governing inspection of records for this purpose, and any other relevant (i.e., GSA or Commerce) directive. Such disclosure shall not be used to make determinations about individuals.

8. A record from this system of records may be disclosed, as a routine use, to the public after either publication of the application pursuant to 35 U.S.C. 122(b) or issuance of a patent pursuant to 35 U.S.C. 151. Further, a record may be disclosed, subject to the limitations of 37 CFR 1.14, as a routine use, to the public if the record was filed in an application which became abandoned or in which the proceedings were terminated and which application is referenced by either a published application, an application open to public inspections or an issued patent.

9. A record from this system of records may be disclosed, as a routine use, to a Federal, State, or local law enforcement agency, if the USPTO becomes aware of a violation or potential violation of law or regulation.

UNITED STATES PATENT AND TRADEMARK OFFICE

Commissioner for Patents
United States Patent and Trademark Office
P.O. Box 1450
Alexandria, VA 22313-1450
www.uspto.gov

JOHN F HOFFMAN
BAKER & DANIELS
111 EAST WAYNE STREET
SUITE 800
FORT WAYNE, IN 46802

MAILED
APR 15 2011
OFFICE OF PETITIONS

In re Patent No. 6,234,098 :
Issue Date: May 22, 2001 :
Application No. 09/340,267 : ON PETITION
Filed: June 25, 1999 :
Attorney Docket No. HAR0023-01 :

This is a decision in response to a petition filed February 23, 2011, under 37 CFR 1.378(c), to accept the unintentionally delayed payment of a maintenance fee for the above-identified patent.

The petition is **DISMISSED AS MOOT**.

A review of the record indicates that a petition under 37 CFR 1.378(c) was filed and automatically granted by the Electronic Filing System (EFS) on February 23, 2011.

There is no indication that the person signing the petition was ever given a power of attorney or authorization of agent to prosecute the application. However in accordance with 37 CFR 1.34 (a), the signature appearing on the correspondence shall constitute a representation to the United States Patent and Trademark Office that he/she is authorized to represent the particular party on whose behalf he/she acts.

Telephone inquiries concerning this decision should be directed to the undersigned at (571) 272-6059.

Alicia Kelley
Petitions Examiner
Office of Petitions

cc: DALE DI MAGGIO
MALIN HALEY AND DIMAGGIO PA
1936 S ANDREWS AVE
FORT LAUDERDALE, FL 33316

SPE RESPONSE FOR CERTIFICATE OF CORRECTION

DATE : 12/18/11

TO SPE OF : ART UNIT 2436

09/341,075

SUBJECT : Request for Certificate of Correction for Appl. No.: ~~11493912~~ Patent No.: 6499103

CofC mailroom date: 11/02/11

Please respond to this request for a certificate of correction within 7 days.

FOR IFW FILES:

Please review the requested changes/corrections as shown in the **COCIN** document(s) in the IFW application image. No new matter should be introduced, nor should the scope or meaning of the claims be changed.

Please complete the response (see below) and forward the completed response to scanning using document code **COCX**.

FOR PAPER FILES:

Please review the requested changes/corrections as shown in the attached certificate of correction. Please complete this form (see below) and forward it with the file to:

Certificates of Correction Branch (CofC)
Randolph Square – 9D10-A
Palm Location 7580
[redacted]

Note: **Please check Claims 6, 7, 8-17, 24, 25, 29 and 34**
Should the changes to the claims be approved?

Lamonte Newsome

Certificates of Correction Branch

571-272-3421

Thank You For Your Assistance

The request for issuing the above-identified correction(s) is hereby:
Note your decision on the appropriate box.

SPE RESPONSE FOR CERTIFICATE OF CORRECTION

☒ **Approved** — **All** changes apply.

☐ **Approved in Part** — Specify below which changes **do not** apply.

☐ **Denied** — State the reasons for denial below.

Comments: All changes are appropriate.

Albert Bui — 2432

12/29/2011

SPE — **Art Unit**

UNITED STATES PATENT AND TRADEMARK OFFICE

Commissioner for Patents
United States Patent and Trademark Office
P.O. Box 1450
Alexandria, VA 22313-1450
www.uspto.gov

HOGAN LOVELLS US LLP
1999 AVENUE OF THE STARS
SUITE 1400
LOS ANGELES CA 90067

MAILED
JUN 30 2011
OFFICE OF PETITIONS

In re Patent No. 6,289,155 :
Issued: September 11, 2001 :
Application No. 09/342,142 : ON PETITION
Filed: June 29, 1999 :
Attorney Docket No. 34013-00011 :

This is a decision on the petition under 37 CFR 1.378(c), filed June 2, 2011, to accept the delayed payment of a maintenance fee for the above-identified patent.

The petition is **GRANTED**.

This patent expired on September 12, 2009 for failure to pay the seven and one-half year maintenance fee. Since this petition was submitted within twenty-four months after the six-month grace period provided in 37 CFR 1.362(e), the petition was timely filed under the provisions of 37 CFR 1.378(c).

The maintenance fee is hereby accepted and the above-identified patent is reinstated as of the mail date of this decision.

Additionally, the address given on the petition differs from the address of record. A courtesy copy of this decision is being mailed to the address given on the petition; however, the Office will mail all future correspondence solely to the address of record.

Telephone inquiries concerning this decision should be directed to the undersigned at (571) 272-7751.

/Joan Olszewski/
Joan Olszewski
Petitions Examiner
Office of Petitions

cc: Kevin G. Shaw
555 Thirteenth Street, N.W.
Washington, D.C. 20004

UNITED STATES PATENT AND TRADEMARK OFFICE

Commissioner for Patents
United States Patent and Trademark Office
P.O. Box 1450
Alexandria, VA 22313-1450
www.uspto.gov

In re Patent No. 6626414
Issue Date: September 30,2003
Application No. 09344475
Filed: June 25,1999
Attorney Docket No. D-7082

:
:DECISION GRANTING PETITION
:UNDER 37 CFR 1.378(c)
:

This is a decision on the electronic petition, filed December 6,2011 ,under 37 CFR 1.378(c) to accept the unintentionally delayed payment of the 7.5 year maintenance fee for the above-identified patent.

The petition is **GRANTED**.

The maintenance fee is accepted, and the above-identified patent reinstated as of December 6,2011 . This decision also constitutes notice that the fee has been accepted. An electronic copy of the petition and this decision has been created as an entry in the Image File Wrapper. Nevertheless, petitioner should print and retain an independent copy.

Telephone inquiries related to this electronic decision should be directed to the Electronic Business Center at 1-866-217-9197.

PTO/SB/66 (03-09)
Approved for use through 03/31/2012. OMB 0651-0016
U.S. Patent and Trademark Office: U.S. DEPARTMENT OF COMMERCE
Under the Paperwork Reduction Act of 1995, no persons are required to respond to a collection of information unless it displays valid OMB control number.

PETITION TO ACCEPT UNINTENTIONALLY DELAYED PAYMENT OF MAINTENANCE FEE IN AN EXPIRED PATENT (37 CFR 1.378(c))

Patent Number	Issue Date (YYYY-MM-DD)	Application Number	Filing Date (YYYY-MM-DD)	Docket Number (if applicable)
6626414	2003-09-30	09344475	1999-06-25	

CAUTION: Maintenance fee (and surcharge, if any) payment must correctly identify: (1) the patent number and (2) the application number of the actual U.S. application leading to issuance of that patent to ensure the fee(s) is/are associated with the correct patent. 37 CFR 1.366(c) and (d).

SMALL ENTITY

☒ Patentee claims, or has previously claimed, small entity status. See 37 CFR 1.27.

LOSS OF ENTITLEMENT TO SMALL ENTITY STATUS

☐ Patentee is no longer entitled to small entity status. See 37 CFR 1.27(g)

NOT Small Entity	Fee	Code	Small Entity	Fee	Code
○	3 ½ year	(1551)	○	3 ½ year	(2551)
○	7 ½ year	(1552)	◉	7 ½ year	(2552)
○	11 ½ year	(1553)	○	11 ½ year	(2553)

SURCHARGE

The surcharge required by 37 CFR 1.20(i)(2) (Fee Code 1558) must be paid as a condition of accepting unintentionally delayed payment of the maintenance fee.

MAINTENANCE FEE (37 CFR 1.20(e)-(g))

The appropriate maintenance fee must be submitted with this petition.

STATEMENT

THE UNDERSIGNED CERTIFIES THAT THE DELAY IN PAYMENT OF THE MAINTENANCE FEE TO THIS PATENT WAS UNINTENTIONAL

PETITIONER(S) REQUEST THAT THE DELAYED PAYMENT OF THE MAINTENANCE FEE BE ACCEPTED AND THE PATENT REINSTATED

THIS PORTION MUST BE COMPLETED BY THE SIGNATORY OR SIGNATORIES

37 CFR 1.378(d) states: "Any petition under this section must be signed by an attorney or agent registered to practice before the Patent and Trademark Office, or by the patentee, the assignee, or other party in interest."

I certify, in accordance with 37 CFR 1.4(d)(4) that I am

◉ An attorney or agent registered to practice before the Patent and Trademark Office

○ A sole patentee

○ A joint patentee; I certify that I am authorized to sign this submission on behalf of all the other patentees.

○ A joint patentee; all of whom are signing this e-petition

○ The assignee of record of the entire interest

PTO/SB/66 (03-09)
Approved for use through 03/31/2012. OMB 0651-0016
U.S. Patent and Trademark Office: U.S. DEPARTMENT OF COMMERCE
Under the Paperwork Reduction Act of 1995, no persons are required to respond to a collection of information unless it displays valid OMB control number.

Patent Practitioner			
A signature of the applicant or representative is required in accordance with 37 CFR 1.33 and 10.18. Please see 37 CFR 1.4(d) for the form of the signature			
Signature	/W. Edward Ramage/	Date (YYYY-MM-DD)	2011-12-05
Name	W. Edward Ramage	Registration Number	50810

This collection of information is required by 37 CFR 1.378(c). The information is required to obtain or retain a benefit by the public which is to file (and by the USPTO to process) an application. Confidentiality is governed by 35 U.S.C. 122 and 37 CFR 1.11 and 1.14. This collection is estimated to take 1 hour to complete, including gathering, preparing, and submitting the completed application form to the USPTO. Time will vary depending upon the individual case. Any comments on the amount of time you require to complete this form and/ or suggestions for reducing this burden, should be sent to the Chief Information Officer, U.S. Patent and Trademark Office, U.S. Department of Commerce, P.O. Box 1450, Alexandria, VA 22313-1450. DO NOT SEND FEES OR COMPLETED FORMS TO THIS ADDRESS. **This form can only be used when in conjunction with EFS-Web. If this form is mailed to the USPTO, it may cause delays in reinstating the patent.**

Privacy Act Statement

The Privacy Act of 1974 (P.L. 93-579) requires that you be given certain information in connection with your submission of the attached form related to a patent application or patent. Accordingly, pursuant to the requirements of the Act, please be advised that: (1) the general authority for the collection of this information is 35 U.S.C. 2(b)(2); (2) furnishing of the information solicited is voluntary; and (3) the principal purpose for which the information is used by the U.S. Patent and Trademark Office is to process and/or examine your submission related to a patent application or patent. If you do not furnish the requested information, the U.S. Patent and Trademark Office may not be able to process and/or examine your submission, which may result in termination of proceedings or abandonment of the application or expiration of the patent.

The information provided by you in this form will be subject to the following routine uses:

1. The information on this form will be treated confidentially to the extent allowed under the Freedom of Information Act (5 U.S.C. 552) and the Privacy Act (5 U.S.C. 552a). Records from this system of records may be disclosed to the Department of Justice to determine whether the Freedom of Information Act requires disclosure of these records.

2. A record from this system of records may be disclosed, as a routine use, in the course of presenting evidence to a court, magistrate, or administrative tribunal, including disclosures to opposing counsel in the course of settlement negotiations.

3. A record in this system of records may be disclosed, as a routine use, to a Member of Congress submitting a request involving an individual, to whom the record pertains, when the individual has requested assistance from the Member with respect to the subject matter of the record.

4. A record in this system of records may be disclosed, as a routine use, to a contractor of the Agency having need for the information in order to perform a contract. Recipients of information shall be required to comply with the requirements of the Privacy Act of 1974, as amended, pursuant to 5 U.S.C. 552a(m).

5. A record related to an International Application filed under the Patent Cooperation Treaty in this system of records may be disclosed, as a routine use, to the International Bureau of the World Intellectual Property Organization, pursuant to the Patent Cooperation Treaty.

6. A record in this system of records may be disclosed, as a routine use, to another federal agency for purposes of National Security review (35 U.S.C. 181) and for review pursuant to the Atomic Energy Act (42 U.S.C. 218(c)).

7. A record from this system of records may be disclosed, as a routine use, to the Administrator, General Services, or his/her designee, during an inspection of records conducted by GSA as part of that agency's responsibility to recommend improvements in records management practices and programs, under authority of 44 U.S.C. 2904 and 2906. Such disclosure shall be made in accordance with the GSA regulations governing inspection of records for this purpose, and any other relevant (i.e., GSA or Commerce) directive. Such disclosure shall not be used to make determinations about individuals.

8. A record from this system of records may be disclosed, as a routine use, to the public after either publication of the application pursuant to 35 U.S.C. 122(b) or issuance of a patent pursuant to 35 U.S.C. 151. Further, a record may be disclosed, subject to the limitations of 37 CFR 1.14, as a routine use, to the public if the record was filed in an application which became abandoned or in which the proceedings were terminated and which application is referenced by either a published application, an application open to public inspections or an issued patent.

9. A record from this system of records may be disclosed, as a routine use, to a Federal, State, or local law enforcement agency, if the USPTO becomes aware of a violation or potential violation of law or regulation.

UNITED STATES PATENT AND TRADEMARK OFFICE

Commissioner for Patents
United States Patent and Trademark Office
P.O. Box 1450
Alexandria, VA 22313-1450
www.uspto.gov

STONEMAN LAW PATENT GROUP
P.O. BOX 40070
PHOENIX AZ 85067-0070

MAILED
JUL 15 2011
OFFICE OF PETITIONS

In re Patent No. 6,871,107
Issued: March 22, 2005
Application No. 09/346,430
Filed: July 1, 1999
Attorney Docket No: P08167-T

ON PETITION

This is a decision regarding your request for acceptance of a fee deficiency submission and loss of small entity status filed June 24, 2011 under 37 CFR 1.28.

On September 1, 1998, the Court of Appeals for the Federal Circuit held that 37 CFR 1.28(c) is the sole provision governing the time for correction of the erroneous payment of the issue fee as a small entity. See DH Technology v. Synergystex International, Inc.. 154 F.33d 1333, 47 USPQ2d 1865 (Fed. Cir. Sept. 1, 1998).

The Office no longer investigates or rejects original or reissue applications under 37 CFR 1.56. 1098 Off. Gaz. Pat. Office 502 (January 3, 1989). Therefore nothing in this Notice is intended to imply that an investigation was done.

Your fee deficiency submission in the amount of $515, under 37 CFR 1.28 is hereby accepted and the petition is **GRANTED**. Status as a small entity has also been removed.

Inquiries related to this communication should be directed to the Office of Petitions Staff at (571) 272-3282.

Patricia Faison-Ball
Senior Petitions Attorney
Office of Petitions

UNITED STATES PATENT AND TRADEMARK OFFICE

Commissioner for Patents
United States Patent and Trademark Office
P.O. Box 1450
Alexandria, VA 22313-1450
www.uspto.gov

BRUCE R. KORMAN
1434 W. 11TH STREET
LOS ANGELES CA 90015

MAILED
DEC 15 2011
OFFICE OF PETITIONS

In re Patent No. 6,308,887	:	
Issue Date: October 30, 2001	:	
Application No. 09/347,069	:	DECISION ON PETITION
Filed: July 02, 1999	:	
Attorney Docket No. 141815-5	:	

This is a decision on the petition under 37 CFR 1.378(c), filed October 31, 2011, to accept the unintentionally delayed payment of a maintenance fee for the above-identified patent.

The petition is **GRANTED**.

This patent expired on October 30, 2009 for failure to pay the seven and one-half year maintenance fee. Since this petition was submitted within twenty-four months after the six-month grace period provided in 37 CFR 1.362(e), the petition was timely filed under the provisions of 37 CFR 1.378(c).

The maintenance fee is hereby accepted and the above-identified patent is reinstated as of the mail date of this decision.

Telephone inquiries concerning this decision should be directed to the undersigned at (571) 272-4231.

The patent file is being forwarded to Files Repository.

/Michelle R. Eason/
Michelle R. Eason
Paralegal Specialist
Office of Petitions

UNITED STATES PATENT AND TRADEMARK OFFICE

Commissioner for Patents
United States Patent and Trademark Office
P.O. Box 1450
Alexandria, VA 22313-1450
www.uspto.gov

In re Patent No. 6366566
Issue Date: April 2,2002
Application No. 09350249
Filed: July 8,1999
Attorney Docket No. 244/200

:
:DECISION GRANTING PETITION
:UNDER 37 CFR 1.378(c)
:

This is a decision on the electronic petition, filed October 18,2010 ,under 37 CFR 1.378(c) to accept the unintentionally delayed payment of the 7.5 year maintenance fee for the above-identified patent.

The petition is **GRANTED**.

The maintenance fee is accepted, and the above-identified patent reinstated as of October 18,2010 . This decision also constitutes notice that the fee has been accepted. An electronic copy of the petition and this decision has been created as an entry in the Image File Wrapper. Nevertheless, petitioner should print and retain an independent copy.

Telephone inquiries related to this electronic decision should be directed to the Electronic Business Center at 1-866-217-9197.

PTO/SB/66 (03-09)
Approved for use through 03/31/2012. OMB 0651-0016
U.S. Patent and Trademark Office: U.S. DEPARTMENT OF COMMERCE
Under the Paperwork Reduction Act of 1995, no persons are required to respond to a collection of information unless it displays valid OMB control number.

PETITION TO ACCEPT UNINTENTIONALLY DELAYED PAYMENT OF MAINTENANCE FEE IN AN EXPIRED PATENT (37 CFR 1.378(c))

Patent Number	Issue Date (YYYY-MM-DD)	Application Number	Filing Date (YYYY-MM-DD)	Docket Number (if applicable)
6366566	2002-04-02	09350249	1999-07-08	244/200

CAUTION: Maintenance fee (and surcharge, if any) payment must correctly identify: (1) the patent number and (2) the application number of the actual U.S. application leading to issuance of that patent to ensure the fee(s) is/are associated with the correct patent. 37 CFR 1.366(c) and (d).

SMALL ENTITY

☐ Patentee claims, or has previously claimed, small entity status. See 37 CFR 1.27.

LOSS OF ENTITLEMENT TO SMALL ENTITY STATUS

☐ Patentee is no longer entitled to small entity status. See 37 CFR 1.27(g)

NOT Small Entity			Small Entity		
	Fee	Code		Fee	Code
○	3 ½ year	(1551)	○	3 ½ year	(2551)
◉	7 ½ year	(1552)	○	7 ½ year	(2552)
○	11 ½ year	(1553)	○	11 ½ year	(2553)

SURCHARGE

The surcharge required by 37 CFR 1.20(i)(2) (Fee Code 1558) must be paid as a condition of accepting unintentionally delayed payment of the maintenance fee.

MAINTENANCE FEE (37 CFR 1.20(e)-(g))

The appropriate maintenance fee must be submitted with this petition.

STATEMENT

THE UNDERSIGNED CERTIFIES THAT THE DELAY IN PAYMENT OF THE MAINTENANCE FEE TO THIS PATENT WAS UNINTENTIONAL

PETITIONER(S) REQUEST THAT THE DELAYED PAYMENT OF THE MAINTENANCE FEE BE ACCEPTED AND THE PATENT REINSTATED

THIS PORTION MUST BE COMPLETED BY THE SIGNATORY OR SIGNATORIES

37 CFR 1.378(d) states: "Any petition under this section must be signed by an attorney or agent registered to practice before the Patent and Trademark Office, or by the patentee, the assignee, or other party in interest."

I certify, in accordance with 37 CFR 1.4(d)(4) that I am

◉ An attorney or agent registered to practice before the Patent and Trademark Office

○ A sole patentee

○ A joint patentee; I certify that I am authorized to sign this submission on behalf of all the other patentees.

○ A joint patentee; all of whom are signing this e-petition

○ The assignee of record of the entire interest

PTO/SB/66 (03-09)
Approved for use through 03/31/2012. OMB 0651-0016
U.S. Patent and Trademark Office: U.S. DEPARTMENT OF COMMERCE
Under the Paperwork Reduction Act of 1995, no persons are required to respond to a collection of information unless it displays valid OMB control number.

Patent Practitioner			
A signature of the applicant or representative is required in accordance with 37 CFR 1.33 and 10.18. Please see 37 CFR 1.4(d) for the form of the signature			
Signature	/Kendal M. Sheets/	Date (YYYY-MM-DD)	2010-10-15
Name	Kendal M. Sheets	Registration Number	47077

This collection of information is required by 37 CFR 1.378(c). The information is required to obtain or retain a benefit by the public which is to file (and by the USPTO to process) an application. Confidentiality is governed by 35 U.S.C. 122 and 37 CFR 1.11 and 1.14. This collection is estimated to take 1 hour to complete, including gathering, preparing, and submitting the completed application form to the USPTO. Time will vary depending upon the individual case. Any comments on the amount of time you require to complete this form and/ or suggestions for reducing this burden, should be sent to the Chief Information Officer, U.S. Patent and Trademark Office, U.S. Department of Commerce, P.O. Box 1450, Alexandria, VA 22313-1450. DO NOT SEND FEES OR COMPLETED FORMS TO THIS ADDRESS. **This form can only be used when in conjunction with EFS-Web. If this form is mailed to the USPTO, it may cause delays in reinstating the patent.**

Privacy Act Statement

The Privacy Act of 1974 (P.L. 93-579) requires that you be given certain information in connection with your submission of the attached form related to a patent application or patent. Accordingly, pursuant to the requirements of the Act, please be advised that: (1) the general authority for the collection of this information is 35 U.S.C. 2(b)(2); (2) furnishing of the information solicited is voluntary; and (3) the principal purpose for which the information is used by the U.S. Patent and Trademark Office is to process and/or examine your submission related to a patent application or patent. If you do not furnish the requested information, the U.S. Patent and Trademark Office may not be able to process and/or examine your submission, which may result in termination of proceedings or abandonment of the application or expiration of the patent.

The information provided by you in this form will be subject to the following routine uses:

1. The information on this form will be treated confidentially to the extent allowed under the Freedom of Information Act (5 U.S.C. 552) and the Privacy Act (5 U.S.C. 552a). Records from this system of records may be disclosed to the Department of Justice to determine whether the Freedom of Information Act requires disclosure of these records.

2. A record from this system of records may be disclosed, as a routine use, in the course of presenting evidence to a court, magistrate, or administrative tribunal, including disclosures to opposing counsel in the course of settlement negotiations.

3. A record in this system of records may be disclosed, as a routine use, to a Member of Congress submitting a request involving an individual, to whom the record pertains, when the individual has requested assistance from the Member with respect to the subject matter of the record.

4. A record in this system of records may be disclosed, as a routine use, to a contractor of the Agency having need for the information in order to perform a contract. Recipients of information shall be required to comply with the requirements of the Privacy Act of 1974, as amended, pursuant to 5 U.S.C. 552a(m).

5. A record related to an International Application filed under the Patent Cooperation Treaty in this system of records may be disclosed, as a routine use, to the International Bureau of the World Intellectual Property Organization, pursuant to the Patent Cooperation Treaty.

6. A record in this system of records may be disclosed, as a routine use, to another federal agency for purposes of National Security review (35 U.S.C. 181) and for review pursuant to the Atomic Energy Act (42 U.S.C. 218(c)).

7. A record from this system of records may be disclosed, as a routine use, to the Administrator, General Services, or his/her designee, during an inspection of records conducted by GSA as part of that agency's responsibility to recommend improvements in records management practices and programs, under authority of 44 U.S.C. 2904 and 2906. Such disclosure shall be made in accordance with the GSA regulations governing inspection of records for this purpose, and any other relevant (i.e., GSA or Commerce) directive. Such disclosure shall not be used to make determinations about individuals.

8. A record from this system of records may be disclosed, as a routine use, to the public after either publication of the application pursuant to 35 U.S.C. 122(b) or issuance of a patent pursuant to 35 U.S.C. 151. Further, a record may be disclosed, subject to the limitations of 37 CFR 1.14, as a routine use, to the public if the record was filed in an application which became abandoned or in which the proceedings were terminated and which application is referenced by either a published application, an application open to public inspections or an issued patent.

9. A record from this system of records may be disclosed, as a routine use, to a Federal, State, or local law enforcement agency, if the USPTO becomes aware of a violation or potential violation of law or regulation.

UNITED STATES PATENT AND TRADEMARK OFFICE

Commissioner for Patents
United States Patent and Trademark Office
P.O. Box 1450
Alexandria, VA 22313-1450
www.uspto.gov

In re Patent No. 6327496
Issue Date: December 4,2001
Application No. 09351782
Filed: July 12,1999
Attorney Docket No. 16921/309

:
:DECISION GRANTING PETITION
:UNDER 37 CFR 1.378(c)
:

This is a decision on the electronic petition, filed December 2,2011 ,under 37 CFR 1.378(c) to accept the unintentionally delayed payment of the 7.5 year maintenance fee for the above-identified patent.

The petition is **GRANTED**.

The maintenance fee is accepted, and the above-identified patent reinstated as of December 2,2011 . This decision also constitutes notice that the fee has been accepted. An electronic copy of the petition and this decision has been created as an entry in the Image File Wrapper. Nevertheless, petitioner should print and retain an independent copy.

Telephone inquiries related to this electronic decision should be directed to the Electronic Business Center at 1-866-217-9197.

PTO/SB/66 (03-09)
Approved for use through 03/31/2012. OMB 0651-0016
U.S. Patent and Trademark Office: U.S. DEPARTMENT OF COMMERCE
Under the Paperwork Reduction Act of 1995, no persons are required to respond to a collection of information unless it displays valid OMB control number.

PETITION TO ACCEPT UNINTENTIONALLY DELAYED PAYMENT OF MAINTENANCE FEE IN AN EXPIRED PATENT (37 CFR 1.378(c))

Patent Number	Issue Date (YYYY-MM-DD)	Application Number	Filing Date (YYYY-MM-DD)	Docket Number (if applicable)
6327496	2001-12-04	09351782	1999-07-12	ACIZ-473-101

CAUTION: Maintenance fee (and surcharge, if any) payment must correctly identify: (1) the patent number and (2) the application number of the actual U.S. application leading to issuance of that patent to ensure the fee(s) is/are associated with the correct patent. 37 CFR 1.366(c) and (d).

SMALL ENTITY

☐ Patentee claims, or has previously claimed, small entity status. See 37 CFR 1.27.

LOSS OF ENTITLEMENT TO SMALL ENTITY STATUS

☐ Patentee is no longer entitled to small entity status. See 37 CFR 1.27(g)

NOT Small Entity	Fee	Code	Small Entity	Fee	Code
○	3 ½ year	(1551)	○	3 ½ year	(2551)
◉	7 ½ year	(1552)	○	7 ½ year	(2552)
○	11 ½ year	(1553)	○	11 ½ year	(2553)

SURCHARGE

The surcharge required by 37 CFR 1.20(i)(2) (Fee Code 1558) must be paid as a condition of accepting unintentionally delayed payment of the maintenance fee.

MAINTENANCE FEE (37 CFR 1.20(e)-(g))

The appropriate maintenance fee must be submitted with this petition.

STATEMENT

THE UNDERSIGNED CERTIFIES THAT THE DELAY IN PAYMENT OF THE MAINTENANCE FEE TO THIS PATENT WAS UNINTENTIONAL

PETITIONER(S) REQUEST THAT THE DELAYED PAYMENT OF THE MAINTENANCE FEE BE ACCEPTED AND THE PATENT REINSTATED

THIS PORTION MUST BE COMPLETED BY THE SIGNATORY OR SIGNATORIES

37 CFR 1.378(d) states: "Any petition under this section must be signed by an attorney or agent registered to practice before the Patent and Trademark Office, or by the patentee, the assignee, or other party in interest."

I certify, in accordance with 37 CFR 1.4(d)(4) that I am

◉ An attorney or agent registered to practice before the Patent and Trademark Office

○ A sole patentee

○ A joint patentee; I certify that I am authorized to sign this submission on behalf of all the other patentees.

○ A joint patentee; all of whom are signing this e-petition

○ The assignee of record of the entire interest

PTO/SB/66 (03-09)
Approved for use through 03/31/2012. OMB 0651-0016
U.S. Patent and Trademark Office: U.S. DEPARTMENT OF COMMERCE
Under the Paperwork Reduction Act of 1995, no persons are required to respond to a collection of information unless it displays valid OMB control number.

Patent Practitioner			
A signature of the applicant or representative is required in accordance with 37 CFR 1.33 and 10.18. Please see 37 CFR 1.4(d) for the form of the signature			
Signature	/Laura Zager/	Date (YYYY-MM-DD)	2011-12-02
Name	Laura Zager	Registration Number	64813

This collection of information is required by 37 CFR 1.378(c). The information is required to obtain or retain a benefit by the public which is to file (and by the USPTO to process) an application. Confidentiality is governed by 35 U.S.C. 122 and 37 CFR 1.11 and 1.14. This collection is estimated to take 1 hour to complete, including gathering, preparing, and submitting the completed application form to the USPTO. Time will vary depending upon the individual case. Any comments on the amount of time you require to complete this form and/ or suggestions for reducing this burden, should be sent to the Chief Information Officer, U.S. Patent and Trademark Office, U.S. Department of Commerce, P.O. Box 1450, Alexandria, VA 22313-1450. DO NOT SEND FEES OR COMPLETED FORMS TO THIS ADDRESS. **This form can only be used when in conjunction with EFS-Web. If this form is mailed to the USPTO, it may cause delays in reinstating the patent.**

Privacy Act Statement

The Privacy Act of 1974 (P.L. 93-579) requires that you be given certain information in connection with your submission of the attached form related to a patent application or patent. Accordingly, pursuant to the requirements of the Act, please be advised that: (1) the general authority for the collection of this information is 35 U.S.C. 2(b)(2); (2) furnishing of the information solicited is voluntary; and (3) the principal purpose for which the information is used by the U.S. Patent and Trademark Office is to process and/or examine your submission related to a patent application or patent. If you do not furnish the requested information, the U.S. Patent and Trademark Office may not be able to process and/or examine your submission, which may result in termination of proceedings or abandonment of the application or expiration of the patent.

The information provided by you in this form will be subject to the following routine uses:

1. The information on this form will be treated confidentially to the extent allowed under the Freedom of Information Act (5 U.S.C. 552) and the Privacy Act (5 U.S.C. 552a). Records from this system of records may be disclosed to the Department of Justice to determine whether the Freedom of Information Act requires disclosure of these records.

2. A record from this system of records may be disclosed, as a routine use, in the course of presenting evidence to a court, magistrate, or administrative tribunal, including disclosures to opposing counsel in the course of settlement negotiations.

3. A record in this system of records may be disclosed, as a routine use, to a Member of Congress submitting a request involving an individual, to whom the record pertains, when the individual has requested assistance from the Member with respect to the subject matter of the record.

4. A record in this system of records may be disclosed, as a routine use, to a contractor of the Agency having need for the information in order to perform a contract. Recipients of information shall be required to comply with the requirements of the Privacy Act of 1974, as amended, pursuant to 5 U.S.C. 552a(m).

5. A record related to an International Application filed under the Patent Cooperation Treaty in this system of records may be disclosed, as a routine use, to the International Bureau of the World Intellectual Property Organization, pursuant to the Patent Cooperation Treaty.

6. A record in this system of records may be disclosed, as a routine use, to another federal agency for purposes of National Security review (35 U.S.C. 181) and for review pursuant to the Atomic Energy Act (42 U.S.C. 218(c)).

7. A record from this system of records may be disclosed, as a routine use, to the Administrator, General Services, or his/her designee, during an inspection of records conducted by GSA as part of that agency's responsibility to recommend improvements in records management practices and programs, under authority of 44 U.S.C. 2904 and 2906. Such disclosure shall be made in accordance with the GSA regulations governing inspection of records for this purpose, and any other relevant (i.e., GSA or Commerce) directive. Such disclosure shall not be used to make determinations about individuals.

8. A record from this system of records may be disclosed, as a routine use, to the public after either publication of the application pursuant to 35 U.S.C. 122(b) or issuance of a patent pursuant to 35 U.S.C. 151. Further, a record may be disclosed, subject to the limitations of 37 CFR 1.14, as a routine use, to the public if the record was filed in an application which became abandoned or in which the proceedings were terminated and which application is referenced by either a published application, an application open to public inspections or an issued patent.

9. A record from this system of records may be disclosed, as a routine use, to a Federal, State, or local law enforcement agency, if the USPTO becomes aware of a violation or potential violation of law or regulation.

UNITED STATES PATENT AND TRADEMARK OFFICE

Commissioner for Patents
United States Patent and Trademark Office
P.O. Box 1450
Alexandria, VA 22313-1450
www.uspto.gov

MAILED

SEP 27 2011

OFFICE OF PETITIONS

THE WEBB LAW FIRM, P.C.
ONE GATEWAY CENTER
420 FT. DUQUESNE BLVD, SUITE 1200
PITTSBURGH PA 15222

In re Patent No. 6,434,260 :
Issue Date: August 13, 2002 :
Application No. 09/352,002 : ON PETITION
Filed: July 12, 1999 :
Attorney Docket No. 6516-112905 :

This is a decision on the petition under 37 CFR 1.378(c), filed August 30, 2011 to accept the unintentionally delayed payment of a maintenance fee for the above-identified patent.

The petition is **GRANTED**.

This patent expired on August 14, 2010, for failure to pay the seven and one-half year maintenance fee. Since this petition was submitted within twenty-four months after the six-month grace period provided in 37 CFR 1.362(e), the petition was timely filed under the provisions of 37 CFR 1.378(c).

The maintenance fee is hereby accepted and the above-identified patent is reinstated as of the mail date of this decision.

Telephone inquiries concerning this decision should be directed to Kimberly Inabinet at (571) 272-4618.

The patent file is being forwarded to Files Repository.

/Kimberly Inabinet/

Kimberly Inabinet
Petitions Examiner
Office of Petitions

UNITED STATES PATENT AND TRADEMARK OFFICE

Commissioner for Patents
United States Patent and Trademark Office
P.O. Box 1450
Alexandria, VA 22313-1450
www.uspto.gov

WAYNE O. DUESCHER
KELTECH ENGINEERING, INC.
951 COUNTRY ROAD C-2 WEST
ROSEVILLE, MN 55113

MAILED

OCT 26 2011

OFFICE OF PETITIONS

In re Patent No. 6,607,157 :
Issue Date: August 19, 2003 :
Application No. 09/353,261 : ON PETITION
Filed: July 14, 1999 :
Patentee(s): Wayne O. Duescher :

This is a decision on the petition under 37 CFR 1.378(c), filed on September 30, 2011, to accept the delayed payment of a maintenance fee for the above-identified patent.

Since petitioner has demonstrated to the satisfaction of the Commissioner that the delay in timely paying the maintenance fee was unintentional, the petition under 37 CFR 1.378(c) is hereby **GRANTED**.

The maintenance fee is hereby accepted and the above-identified patent is reinstated as of the mail date of this decision.

A courtesy copy of this decision is being mailed to the address given in the present petition. However, petitioner will not receive future correspondence, which may be mailed, regarding maintenance fees for the above-identified patent, unless a "Fee Address Indication" form and/or a "Request for Customer Number" form(s) is submitted (See USPTO Website for forms PTO/SB/47 and/or PTO/SB/125).

This patented file is being forwarded to Files Repository.

Telephone inquiries should be directed to the undersigned at (571) 272-3226.

Andrea Smith
Petitions Examiner
Office of Petitions

cc: Mark A. Litman
Mark A. Litman & Associates, P.A.
3209 West 76th Street, Suite 205
Edina, MN 55435

UNITED STATES PATENT AND TRADEMARK OFFICE

Commissioner for Patents
United States Patent and Trademark Office
P.O. Box 1450
Alexandria, VA 22313-1450
www.uspto.gov

JOSEPH H MCGLYNN
6111 SADDLE HORN DRIVE
FAIRFAX VA 22030

MAILED

OCT 19 2011

OFFICE OF PETITIONS

In re Patent No. 6,280,804 :
Issue Date: August 28, 2001 :
Application No. 09/353,831 : ON PETITION
Filed: July 15, 1999 :
Attorney Docket No. AIF32886 :

This is a decision on the petition under 37 CFR 1.378(c), filed September 22, 2011, to accept the delayed payment of a maintenance fee for the above-identified patent.

The petition is **DISMISSED as time barred**.

If reconsideration of this decision is desired, a petition for reconsideration under 37 CFR 1.378(e) must be filed within TWO (2) MONTHS from the mail date of this decision. No extension of this two-month time limit can be granted under 37 CFR 1.136(a) or (b). This is **not** a final agency action within the meaning of 5 U.S.C. § 704.

Any petition for reconsideration of this decision must be accompanied by the petition fee of $400 as set forth in 37 CFR 1.17(f). The petition for reconsideration must include the lacking item(s) noted above, since, after a decision on the petition for reconsideration, no further reconsideration or review of the matter will be undertaken by the Commissioner.

35 USC 41(c)(1) states that:

> "The Commissioner may accept the payment of any maintenance fee required by subsection (b) of this section which is made within twenty-four months after the six-month grace period if the delay is shown to the satisfaction of the Commissioner to have been unintentional, or at any time after the six-month grace period if the delay is shown to the satisfaction of the Commissioner to have been unavoidable."

This patent expired on August 29, 2009, for failure to pay the seven and one-half year maintenance fee. Since this petition was not submitted within twenty-four months after the six-month grace-period provided in 37 CFR 1.362(e), the petition was not timely filed under the provisions of 37 CFR 1.378(c).

If this petition is not renewed or if renewed and not granted, then petitioner may request a refund of the maintenance and surcharge fees paid. The fee for requesting reconsideration is not refundable.

Petitioner may consider filing a petition under 37 CFR 1.378(b), a Petition to Accept Unavoidably Delayed Payment of Maintenance Fee in an Expired Patent, surcharge and maintenance fees paid can be applied toward this petition.

The application file does not indicate a change of address has been filed in this case, although the address given on the petition differs from the address of record. A change of address should be filed in this case in accordance with MPEP 601.03. A courtesy copy of this decision is being mailed to the address noted on the petition. However, until otherwise instructed, all future correspondence regarding this application will be mailed solely to the address of record.

Further correspondence with respect to this matter should be addressed as follows:

By Mail:
Mail Stop PETITION
Commissioner for Patents
Post Office Box 1450
Alexandria, VA 22313-1450

By hand:
U. S. Patent and Trademark Office
Customer Service Window, Mail Stop Petitions
Randolph Building
401 Dulany Street
Alexandria, VA 22314

The centralized facsimile number is **(571) 273-8300.**

Telephone inquiries should be directed to the Kimberly Inabinet at (571) 272-4618.

/Kimberly Inabinet/
Kimberly Inabinet
Petitions Examiner
Office of Petitions

cc: Michael D. Akridge
647 N.E. 23rd Street
Gainesville, FL 32641

UNITED STATES PATENT AND TRADEMARK OFFICE

UNITED STATES DEPARTMENT OF COMMERCE
United States Patent and Trademark Office
Address: COMMISSIONER FOR PATENTS
P.O. Box 1450
Alexandria, Virginia 22313-1450
www.uspto.gov

APPLICATION NO.	FILING DATE	FIRST NAMED INVENTOR	ATTORNEY DOCKET NO.	CONFIRMATION NO.
09/353,831	07/15/1999	ALLEN P. AKRIDGE	AIF32886	4155

7590 11/18/2011

JOSEPH H MCGLYNN
6111 SADDLE HORN DRIVE
FAIRFAX, VA 22030

EXAMINER	
BAHTA, ABRAHAM	
ART UNIT	PAPER NUMBER
1775	
MAIL DATE	DELIVERY MODE
11/18/2011	PAPER

Please find below and/or attached an Office communication concerning this application or proceeding.

The time period for reply, if any, is set in the attached communication.

9200/177

UNITED STATES PATENT AND TRADEMARK OFFICE

Commissioner for Patents
United States Patent and Trademark Office
P.O. Box 1450
Alexandria, VA 22313-1450
www.uspto.gov

OPAP WP28
OCT 25 2011
PATENT & TRADEMARK OFFICE

RECEIVED
OCT 31 2011
OFFICE OF PETITIONS

JOSEPH H MCGLYNN
6111 SADDLE HORN DRIVE
FAIRFAX VA 22030

MAILED
OCT 19 2011
OFFICE OF PETITIONS

In re Patent No. 6,280,804 :
Issue Date: August 28, 2001 :
Application No. 09/353,831 : ON PETITION
Filed: July 15, 1999 :
Attorney Docket No. AIF32886 :

This is a decision on the petition under 37 CFR 1.378(c), filed September 22, 2011, to accept the delayed payment of a maintenance fee for the above-identified patent.

The petition is **DISMISSED as time barred**.

If reconsideration of this decision is desired, a petition for reconsideration under 37 CFR 1.378(e) must be filed within TWO (2) MONTHS from the mail date of this decision. No extension of this two-month time limit can be granted under 37 CFR 1.136(a) or (b). This is **not** a final agency action within the meaning of 5 U.S.C. § 704.

Any petition for reconsideration of this decision must be accompanied by the petition fee of $400 as set forth in 37 CFR 1.17(f). The petition for reconsideration must include the lacking item(s) noted above, since, after a decision on the petition for reconsideration, no further reconsideration or review of the matter will be undertaken by the Commissioner.

35 USC 41(c)(1) states that:

> "The Commissioner may accept the payment of any maintenance fee required by subsection (b) of this section which is made within twenty-four months after the six-month grace period if the delay is shown to the satisfaction of the Commissioner to have been unintentional, or at any time after the six-month grace period if the delay is shown to the satisfaction of the Commissioner to have been unavoidable."

This patent expired on August 29, 2009, for failure to pay the seven and one-half year maintenance fee. Since this petition was not submitted within twenty-four months after the six-month grace-period provided in 37 CFR 1.362(e), the petition was not timely filed under the provisions of 37 CFR 1.378(c).

If this petition is not renewed or if renewed and not granted, then petitioner may request a refund of the maintenance and surcharge fees paid. The fee for requesting reconsideration is not refundable.

Petitioner may consider filing a petition under 37 CFR 1.378(b), a Petition to Accept Unavoidably Delayed Payment of Maintenance Fee in an Expired Patent, surcharge and maintenance fees paid can be applied toward this petition.

The application file does not indicate a change of address has been filed in this case, although the address given on the petition differs from the address of record. A change of address should be filed in this case in accordance with MPEP 601.03. A courtesy copy of this decision is being mailed to the address noted on the petition. However, until otherwise instructed, all future correspondence regarding this application will be mailed solely to the address of record.

Further correspondence with respect to this matter should be addressed as follows:

By Mail:
Mail Stop PETITION
Commissioner for Patents
Post Office Box 1450
Alexandria, VA 22313-1450

By hand:
U. S. Patent and Trademark Office
Customer Service Window, Mail Stop Petitions
Randolph Building
401 Dulany Street
Alexandria, VA 22314

The centralized facsimile number is **(571) 273-8300.**

Telephone inquiries should be directed to the Kimberly Inabinet at (571) 272-4618.

/Kimberly Inabinet/
Kimberly Inabinet
Petitions Examiner
Office of Petitions

cc: Michael D. Akridge
647 N.E. 23rd Street
Gainesville, FL 32641

UNITED STATES PATENT AND TRADEMARK OFFICE

Commissioner for Patents
United States Patent and Trademark Office
P.O. Box 1450
Alexandria, VA 22313-1450
www.uspto.gov

In re Patent No. 6301321
Issue Date: October 9,2001
Application No. 09354068
Filed: July 14,1999
Attorney Docket No.

:
:DECISION GRANTING PETITION
:UNDER 37 CFR 1.378(c)
:

This is a decision on the electronic petition, filed March 11,2011 ,under 37 CFR 1.378(c) to accept the unintentionally delayed payment of the 7.5 year maintenance fee for the above-identified patent.

The petition is **GRANTED**.

The maintenance fee is accepted, and the above-identified patent reinstated as of March 11,2011 .
This decision also constitutes notice that the fee has been accepted. An electronic copy of the petition and this decision has been created as an entry in the Image File Wrapper. Nevertheless, petitioner should print and retain an independent copy.

Telephone inquiries related to this electronic decision should be directed to the Electronic Business Center at 1-866-217-9197.

PTO/SB/66 (03-09)
Approved for use through 03/31/2012. OMB 0651-0016
U.S. Patent and Trademark Office: U.S. DEPARTMENT OF COMMERCE
Under the Paperwork Reduction Act of 1995, no persons are required to respond to a collection of information unless it displays valid OMB control number.

PETITION TO ACCEPT UNINTENTIONALLY DELAYED PAYMENT OF MAINTENANCE FEE IN AN EXPIRED PATENT (37 CFR 1.378(c))

Patent Number	Issue Date (YYYY-MM-DD)	Application Number	Filing Date (YYYY-MM-DD)	Docket Number (if applicable)
6,301,321	2001-10-09	09/354,068	1999-07-14	1449.001

CAUTION: Maintenance fee (and surcharge, if any) payment must correctly identify: (1) the patent number and (2) the application number of the actual U.S. application leading to issuance of that patent to ensure the fee(s) is/are associated with the correct patent. 37 CFR 1.366(c) and (d).

SMALL ENTITY

☒ Patentee claims, or has previously claimed, small entity status. See 37 CFR 1.27.

LOSS OF ENTITLEMENT TO SMALL ENTITY STATUS

☐ Patentee is no longer entitled to small entity status. See 37 CFR 1.27(g)

NOT Small Entity	Fee	Code	Small Entity	Fee	Code
○	3 ½ year	(1551)	○	3 ½ year	(2551)
○	7 ½ year	(1552)	◉	7 ½ year	(2552)
○	11 ½ year	(1553)	○	11 ½ year	(2553)

SURCHARGE

The surcharge required by 37 CFR 1.20(i)(2) (Fee Code 1558) must be paid as a condition of accepting unintentionally delayed payment of the maintenance fee.

MAINTENANCE FEE (37 CFR 1.20(e)-(g))

The appropriate maintenance fee must be submitted with this petition.

STATEMENT

THE UNDERSIGNED CERTIFIES THAT THE DELAY IN PAYMENT OF THE MAINTENANCE FEE TO THIS PATENT WAS UNINTENTIONAL

PETITIONER(S) REQUEST THAT THE DELAYED PAYMENT OF THE MAINTENANCE FEE BE ACCEPTED AND THE PATENT REINSTATED

THIS PORTION MUST BE COMPLETED BY THE SIGNATORY OR SIGNATORIES

37 CFR 1.378(d) states: "Any petition under this section must be signed by an attorney or agent registered to practice before the Patent and Trademark Office, or by the patentee, the assignee, or other party in interest."

I certify, in accordance with 37 CFR 1.4(d)(4) that I am

◉ An attorney or agent registered to practice before the Patent and Trademark Office

○ A sole patentee

○ A joint patentee; I certify that I am authorized to sign this submission on behalf of all the other patentees.

○ A joint patentee; all of whom are signing this e-petition

○ The assignee of record of the entire interest

PTO/SB/66 (03-09)
Approved for use through 03/31/2012. OMB 0651-0016
U.S. Patent and Trademark Office: U.S. DEPARTMENT OF COMMERCE
Under the Paperwork Reduction Act of 1995, no persons are required to respond to a collection of information unless it displays valid OMB control number.

Patent Practitioner			
A signature of the applicant or representative is required in accordance with 37 CFR 1.33 and 10.18. Please see 37 CFR 1.4(d) for the form of the signature			
Signature	/FLOYD E. IVEY/	Date (YYYY-MM-DD)	2011-03-11
Name	FLOYD E. IVEY	Registration Number	35552

This collection of information is required by 37 CFR 1.378(c). The information is required to obtain or retain a benefit by the public which is to file (and by the USPTO to process) an application. Confidentiality is governed by 35 U.S.C. 122 and 37 CFR 1.11 and 1.14. This collection is estimated to take 1 hour to complete, including gathering, preparing, and submitting the completed application form to the USPTO. Time will vary depending upon the individual case. Any comments on the amount of time you require to complete this form and/ or suggestions for reducing this burden, should be sent to the Chief Information Officer, U.S. Patent and Trademark Office, U.S. Department of Commerce, P.O. Box 1450, Alexandria, VA 22313-1450. DO NOT SEND FEES OR COMPLETED FORMS TO THIS ADDRESS. **This form can only be used when in conjunction with EFS-Web. If this form is mailed to the USPTO, it may cause delays in reinstating the patent.**

Privacy Act Statement

The Privacy Act of 1974 (P.L. 93-579) requires that you be given certain information in connection with your submission of the attached form related to a patent application or patent. Accordingly, pursuant to the requirements of the Act, please be advised that: (1) the general authority for the collection of this information is 35 U.S.C. 2(b)(2); (2) furnishing of the information solicited is voluntary; and (3) the principal purpose for which the information is used by the U.S. Patent and Trademark Office is to process and/or examine your submission related to a patent application or patent. If you do not furnish the requested information, the U.S. Patent and Trademark Office may not be able to process and/or examine your submission, which may result in termination of proceedings or abandonment of the application or expiration of the patent.

The information provided by you in this form will be subject to the following routine uses:

1. The information on this form will be treated confidentially to the extent allowed under the Freedom of Information Act (5 U.S.C. 552) and the Privacy Act (5 U.S.C. 552a). Records from this system of records may be disclosed to the Department of Justice to determine whether the Freedom of Information Act requires disclosure of these records.

2. A record from this system of records may be disclosed, as a routine use, in the course of presenting evidence to a court, magistrate, or administrative tribunal, including disclosures to opposing counsel in the course of settlement negotiations.

3. A record in this system of records may be disclosed, as a routine use, to a Member of Congress submitting a request involving an individual, to whom the record pertains, when the individual has requested assistance from the Member with respect to the subject matter of the record.

4. A record in this system of records may be disclosed, as a routine use, to a contractor of the Agency having need for the information in order to perform a contract. Recipients of information shall be required to comply with the requirements of the Privacy Act of 1974, as amended, pursuant to 5 U.S.C. 552a(m).

5. A record related to an International Application filed under the Patent Cooperation Treaty in this system of records may be disclosed, as a routine use, to the International Bureau of the World Intellectual Property Organization, pursuant to the Patent Cooperation Treaty.

6. A record in this system of records may be disclosed, as a routine use, to another federal agency for purposes of National Security review (35 U.S.C. 181) and for review pursuant to the Atomic Energy Act (42 U.S.C. 218(c)).

7. A record from this system of records may be disclosed, as a routine use, to the Administrator, General Services, or his/her designee, during an inspection of records conducted by GSA as part of that agency's responsibility to recommend improvements in records management practices and programs, under authority of 44 U.S.C. 2904 and 2906. Such disclosure shall be made in accordance with the GSA regulations governing inspection of records for this purpose, and any other relevant (i.e., GSA or Commerce) directive. Such disclosure shall not be used to make determinations about individuals.

8. A record from this system of records may be disclosed, as a routine use, to the public after either publication of the application pursuant to 35 U.S.C. 122(b) or issuance of a patent pursuant to 35 U.S.C. 151. Further, a record may be disclosed, subject to the limitations of 37 CFR 1.14, as a routine use, to the public if the record was filed in an application which became abandoned or in which the proceedings were terminated and which application is referenced by either a published application, an application open to public inspections or an issued patent.

9. A record from this system of records may be disclosed, as a routine use, to a Federal, State, or local law enforcement agency, if the USPTO becomes aware of a violation or potential violation of law or regulation.

UNITED STATES PATENT AND TRADEMARK OFFICE

Commissioner for Patents
United States Patent and Trademark Office
P.O. Box 1450
Alexandria, VA 22313-1450
www.uspto.gov

In re Patent No. 6377274
Issue Date: April 23,2002
Application No. 09354189
Filed: July 15,1999
Attorney Docket No. 12239

:
:DECISION GRANTING PETITION
:UNDER 37 CFR 1.378(c)
:

This is a decision on the electronic petition, filed October 18,2010 ,under 37 CFR 1.378(c) to accept the unintentionally delayed payment of the 7.5 year maintenance fee for the above-identified patent.

The petition is **GRANTED**.

The maintenance fee is accepted, and the above-identified patent reinstated as of October 18,2010 . This decision also constitutes notice that the fee has been accepted. An electronic copy of the petition and this decision has been created as an entry in the Image File Wrapper. Nevertheless, petitioner should print and retain an independent copy.

Telephone inquiries related to this electronic decision should be directed to the Electronic Business Center at 1-866-217-9197.

PTO/SB/66 (03-09)
Approved for use through 03/31/2012. OMB 0651-0016
U.S. Patent and Trademark Office: U.S. DEPARTMENT OF COMMERCE
Under the Paperwork Reduction Act of 1995, no persons are required to respond to a collection of information unless it displays valid OMB control number.

PETITION TO ACCEPT UNINTENTIONALLY DELAYED PAYMENT OF MAINTENANCE FEE IN AN EXPIRED PATENT (37 CFR 1.378(c))

Patent Number	Issue Date (YYYY-MM-DD)	Application Number	Filing Date (YYYY-MM-DD)	Docket Number (if applicable)
6377274	2002-04-23	09354189	1999-07-15	12239

CAUTION: Maintenance fee (and surcharge, if any) payment must correctly identify: (1) the patent number and (2) the application number of the actual U.S. application leading to issuance of that patent to ensure the fee(s) is/are associated with the correct patent. 37 CFR 1.366(c) and (d).

SMALL ENTITY

☐ Patentee claims, or has previously claimed, small entity status. See 37 CFR 1.27.

LOSS OF ENTITLEMENT TO SMALL ENTITY STATUS

☐ Patentee is no longer entitled to small entity status. See 37 CFR 1.27(g)

NOT Small Entity

	Fee	Code
○	3 ½ year	(1551)
◉	7 ½ year	(1552)
○	11 ½ year	(1553)

Small Entity

	Fee	Code
○	3 ½ year	(2551)
○	7 ½ year	(2552)
○	11 ½ year	(2553)

SURCHARGE

The surcharge required by 37 CFR 1.20(i)(2) (Fee Code 1558) must be paid as a condition of accepting unintentionally delayed payment of the maintenance fee.

MAINTENANCE FEE (37 CFR 1.20(e)-(g))

The appropriate maintenance fee must be submitted with this petition.

STATEMENT

THE UNDERSIGNED CERTIFIES THAT THE DELAY IN PAYMENT OF THE MAINTENANCE FEE TO THIS PATENT WAS UNINTENTIONAL

PETITIONER(S) REQUEST THAT THE DELAYED PAYMENT OF THE MAINTENANCE FEE BE ACCEPTED AND THE PATENT REINSTATED

THIS PORTION MUST BE COMPLETED BY THE SIGNATORY OR SIGNATORIES

37 CFR 1.378(d) states: "Any petition under this section must be signed by an attorney or agent registered to practice before the Patent and Trademark Office, or by the patentee, the assignee, or other party in interest."

I certify, in accordance with 37 CFR 1.4(d)(4) that I am

◉ An attorney or agent registered to practice before the Patent and Trademark Office

○ A sole patentee

○ A joint patentee; I certify that I am authorized to sign this submission on behalf of all the other patentees.

○ A joint patentee; all of whom are signing this e-petition

○ The assignee of record of the entire interest

PTO/SB/66 (03-09)
Approved for use through 03/31/2012. OMB 0651-0016
U.S. Patent and Trademark Office: U.S. DEPARTMENT OF COMMERCE
Under the Paperwork Reduction Act of 1995, no persons are required to respond to a collection of information unless it displays valid OMB control number.

Patent Practitioner			
A signature of the applicant or representative is required in accordance with 37 CFR 1.33 and 10.18. Please see 37 CFR 1.4(d) for the form of the signature			
Signature	/Kendal M. Sheets/	Date (YYYY-MM-DD)	2010-10-15
Name	Kendal M. Sheets	Registration Number	47077

This collection of information is required by 37 CFR 1.378(c). The information is required to obtain or retain a benefit by the public which is to file (and by the USPTO to process) an application. Confidentiality is governed by 35 U.S.C. 122 and 37 CFR 1.11 and 1.14. This collection is estimated to take 1 hour to complete, including gathering, preparing, and submitting the completed application form to the USPTO. Time will vary depending upon the individual case. Any comments on the amount of time you require to complete this form and/ or suggestions for reducing this burden, should be sent to the Chief Information Officer, U.S. Patent and Trademark Office, U.S. Department of Commerce, P.O. Box 1450, Alexandria, VA 22313-1450. DO NOT SEND FEES OR COMPLETED FORMS TO THIS ADDRESS. **This form can only be used when in conjunction with EFS-Web. If this form is mailed to the USPTO, it may cause delays in reinstating the patent.**

Privacy Act Statement

The Privacy Act of 1974 (P.L. 93-579) requires that you be given certain information in connection with your submission of the attached form related to a patent application or patent. Accordingly, pursuant to the requirements of the Act, please be advised that: (1) the general authority for the collection of this information is 35 U.S.C. 2(b)(2); (2) furnishing of the information solicited is voluntary; and (3) the principal purpose for which the information is used by the U.S. Patent and Trademark Office is to process and/or examine your submission related to a patent application or patent. If you do not furnish the requested information, the U.S. Patent and Trademark Office may not be able to process and/or examine your submission, which may result in termination of proceedings or abandonment of the application or expiration of the patent.

The information provided by you in this form will be subject to the following routine uses:

1. The information on this form will be treated confidentially to the extent allowed under the Freedom of Information Act (5 U.S.C. 552) and the Privacy Act (5 U.S.C. 552a). Records from this system of records may be disclosed to the Department of Justice to determine whether the Freedom of Information Act requires disclosure of these records.

2. A record from this system of records may be disclosed, as a routine use, in the course of presenting evidence to a court, magistrate, or administrative tribunal, including disclosures to opposing counsel in the course of settlement negotiations.

3. A record in this system of records may be disclosed, as a routine use, to a Member of Congress submitting a request involving an individual, to whom the record pertains, when the individual has requested assistance from the Member with respect to the subject matter of the record.

4. A record in this system of records may be disclosed, as a routine use, to a contractor of the Agency having need for the information in order to perform a contract. Recipients of information shall be required to comply with the requirements of the Privacy Act of 1974, as amended, pursuant to 5 U.S.C. 552a(m).

5. A record related to an International Application filed under the Patent Cooperation Treaty in this system of records may be disclosed, as a routine use, to the International Bureau of the World Intellectual Property Organization, pursuant to the Patent Cooperation Treaty.

6. A record in this system of records may be disclosed, as a routine use, to another federal agency for purposes of National Security review (35 U.S.C. 181) and for review pursuant to the Atomic Energy Act (42 U.S.C. 218(c)).

7. A record from this system of records may be disclosed, as a routine use, to the Administrator, General Services, or his/her designee, during an inspection of records conducted by GSA as part of that agency's responsibility to recommend improvements in records management practices and programs, under authority of 44 U.S.C. 2904 and 2906. Such disclosure shall be made in accordance with the GSA regulations governing inspection of records for this purpose, and any other relevant (i.e., GSA or Commerce) directive. Such disclosure shall not be used to make determinations about individuals.

8. A record from this system of records may be disclosed, as a routine use, to the public after either publication of the application pursuant to 35 U.S.C. 122(b) or issuance of a patent pursuant to 35 U.S.C. 151. Further, a record may be disclosed, subject to the limitations of 37 CFR 1.14, as a routine use, to the public if the record was filed in an application which became abandoned or in which the proceedings were terminated and which application is referenced by either a published application, an application open to public inspections or an issued patent.

9. A record from this system of records may be disclosed, as a routine use, to a Federal, State, or local law enforcement agency, if the USPTO becomes aware of a violation or potential violation of law or regulation.

PTO/SB/66 (03-09)
Approved for use through 03/31/2012. OMB 0651-0016
U.S. Patent and Trademark Office: U.S. DEPARTMENT OF COMMERCE
Under the Paperwork Reduction Act of 1995, no persons are required to respond to a collection of information unless it displays valid OMB control number.

PETITION TO ACCEPT UNINTENTIONALLY DELAYED PAYMENT OF MAINTENANCE FEE IN AN EXPIRED PATENT (37 CFR 1.378(c))

Patent Number	Issue Date (YYYY-MM-DD)	Application Number	Filing Date (YYYY-MM-DD)	Docket Number (if applicable)
6188929	2001-02-13	09354283	1999-07-15	

CAUTION: Maintenance fee (and surcharge, if any) payment must correctly identify: (1) the patent number and (2) the application number of the actual U.S. application leading to issuance of that patent to ensure the fee(s) is/are associated with the correct patent. 37 CFR 1.366(c) and (d).

SMALL ENTITY

☒ Patentee claims, or has previously claimed, small entity status. See 37 CFR 1.27.

LOSS OF ENTITLEMENT TO SMALL ENTITY STATUS

☐ Patentee is no longer entitled to small entity status. See 37 CFR 1.27(g)

NOT Small Entity			Small Entity		
	Fee	Code		Fee	Code
◯	3 ½ year	(1551)	◯	3 ½ year	(2551)
◯	7 ½ year	(1552)	◉	7 ½ year	(2552)
◯	11 ½ year	(1553)	◯	11 ½ year	(2553)

SURCHARGE

The surcharge required by 37 CFR 1.20(i)(2) (Fee Code 1558) must be paid as a condition of accepting unintentionally delayed payment of the maintenance fee.

MAINTENANCE FEE (37 CFR 1.20(e)-(g))

The appropriate maintenance fee must be submitted with this petition.

STATEMENT

THE UNDERSIGNED CERTIFIES THAT THE DELAY IN PAYMENT OF THE MAINTENANCE FEE TO THIS PATENT WAS UNINTENTIONAL

PETITIONER(S) REQUEST THAT THE DELAYED PAYMENT OF THE MAINTENANCE FEE BE ACCEPTED AND THE PATENT REINSTATED

THIS PORTION MUST BE COMPLETED BY THE SIGNATORY OR SIGNATORIES

37 CFR 1.378(d) states: "Any petition under this section must be signed by an attorney or agent registered to practice before the Patent and Trademark Office, or by the patentee, the assignee, or other party in interest."

I certify, in accordance with 37 CFR 1.4(d)(4) that I am

◯ An attorney or agent registered to practice before the Patent and Trademark Office

◉ A sole patentee

◯ A joint patentee; I certify that I am authorized to sign this submission on behalf of all the other patentees.

◯ A joint patentee; all of whom are signing this e-petition

◯ The assignee of record of the entire interest

PTO/SB/66 (03-09)
Approved for use through 03/31/2012. OMB 0651-0016
U.S. Patent and Trademark Office: U.S. DEPARTMENT OF COMMERCE
Under the Paperwork Reduction Act of 1995, no persons are required to respond to a collection of information unless it displays valid OMB control number.

Sole Patentee			
A signature of the applicant or representative is required in accordance with 37 CFR 1.33 and 10.18. Please see 37 CFR 1.4(d) for the form of the signature.			
Signature	/Joseph David Giordano Jr./	Date (YYYY-MM-DD)	2010-09-30
Name	Joseph David Giordano Jr.		

This collection of information is required by 37 CFR 1.378(c). The information is required to obtain or retain a benefit by the public which is to file (and by the USPTO to process) an application. Confidentiality is governed by 35 U.S.C. 122 and 37 CFR 1.11 and 1.14. This collection is estimated to take 1 hour to complete, including gathering, preparing, and submitting the completed application form to the USPTO. Time will vary depending upon the individual case. Any comments on the amount of time you require to complete this form and/ or suggestions for reducing this burden, should be sent to the Chief Information Officer, U.S. Patent and Trademark Office, U.S. Department of Commerce, P.O. Box 1450, Alexandria, VA 22313-1450. DO NOT SEND FEES OR COMPLETED FORMS TO THIS ADDRESS. **This form can only be used when in conjunction with EFS-Web. If this form is mailed to the USPTO, it may cause delays in reinstating the patent.**

Privacy Act Statement

The Privacy Act of 1974 (P.L. 93-579) requires that you be given certain information in connection with your submission of the attached form related to a patent application or patent. Accordingly, pursuant to the requirements of the Act, please be advised that: (1) the general authority for the collection of this information is 35 U.S.C. 2(b)(2); (2) furnishing of the information solicited is voluntary; and (3) the principal purpose for which the information is used by the U.S. Patent and Trademark Office is to process and/or examine your submission related to a patent application or patent. If you do not furnish the requested information, the U.S. Patent and Trademark Office may not be able to process and/or examine your submission, which may result in termination of proceedings or abandonment of the application or expiration of the patent.

The information provided by you in this form will be subject to the following routine uses:

1. The information on this form will be treated confidentially to the extent allowed under the Freedom of Information Act (5 U.S.C. 552) and the Privacy Act (5 U.S.C. 552a). Records from this system of records may be disclosed to the Department of Justice to determine whether the Freedom of Information Act requires disclosure of these records.

2. A record from this system of records may be disclosed, as a routine use, in the course of presenting evidence to a court, magistrate, or administrative tribunal, including disclosures to opposing counsel in the course of settlement negotiations.

3. A record in this system of records may be disclosed, as a routine use, to a Member of Congress submitting a request involving an individual, to whom the record pertains, when the individual has requested assistance from the Member with respect to the subject matter of the record.

4. A record in this system of records may be disclosed, as a routine use, to a contractor of the Agency having need for the information in order to perform a contract. Recipients of information shall be required to comply with the requirements of the Privacy Act of 1974, as amended, pursuant to 5 U.S.C. 552a(m).

5. A record related to an International Application filed under the Patent Cooperation Treaty in this system of records may be disclosed, as a routine use, to the International Bureau of the World Intellectual Property Organization, pursuant to the Patent Cooperation Treaty.

6. A record in this system of records may be disclosed, as a routine use, to another federal agency for purposes of National Security review (35 U.S.C. 181) and for review pursuant to the Atomic Energy Act (42 U.S.C. 218(c)).

7. A record from this system of records may be disclosed, as a routine use, to the Administrator, General Services, or his/her designee, during an inspection of records conducted by GSA as part of that agency's responsibility to recommend improvements in records management practices and programs, under authority of 44 U.S.C. 2904 and 2906. Such disclosure shall be made in accordance with the GSA regulations governing inspection of records for this purpose, and any other relevant (i.e., GSA or Commerce) directive. Such disclosure shall not be used to make determinations about individuals.

8. A record from this system of records may be disclosed, as a routine use, to the public after either publication of the application pursuant to 35 U.S.C. 122(b) or issuance of a patent pursuant to 35 U.S.C. 151. Further, a record may be disclosed, subject to the limitations of 37 CFR 1.14, as a routine use, to the public if the record was filed in an application which became abandoned or in which the proceedings were terminated and which application is referenced by either a published application, an application open to public inspections or an issued patent.

9. A record from this system of records may be disclosed, as a routine use, to a Federal, State, or local law enforcement agency, if the USPTO becomes aware of a violation or potential violation of law or regulation.

UNITED STATES PATENT AND TRADEMARK OFFICE

Commissioner for Patents
United States Patent and Trademark Office
P.O. Box 1450
Alexandria, VA 22313-1450
www.uspto.gov

In re Patent No. 6188929
Issue Date: February 13,2001
Application No. 09354283
Filed: July 15,1999
Attorney Docket No. GEOINC-9901.

:
:DECISION GRANTING PETITION
:UNDER 37 CFR 1.378(c)
:

This is a decision on the electronic petition, filed October 5,2010 ,under 37 CFR 1.378(c) to accept the unintentionally delayed payment of the 7.5 year maintenance fee for the above-identified patent.

The petition is **GRANTED**.

The maintenance fee is accepted, and the above-identified patent reinstated as of October 5,2010 .
This decision also constitutes notice that the fee has been accepted. An electronic copy of the petition and this decision has been created as an entry in the Image File Wrapper. Nevertheless, petitioner should print and retain an independent copy.

Telephone inquiries related to this electronic decision should be directed to the Electronic Business Center at 1-866-217-9197.

UNITED STATES PATENT AND TRADEMARK OFFICE

Commissioner for Patents
United States Patent and Trademark Office
P.O. Box 1450
Alexandria, VA 22313-1450
www.uspto.gov

In re Patent No. 6249260
Issue Date: June 19,2001
Application No. 09356073
Filed: July 16,1999
Attorney Docket No. COM-121

:
:DECISION GRANTING PETITION
:UNDER 37 CFR 1.378(c)
:

This is a decision on the electronic petition, filed November 2,2010 ,under 37 CFR 1.378(c) to accept the unintentionally delayed payment of the 7.5 year maintenance fee for the above-identified patent.

The petition is **GRANTED**.

The maintenance fee is accepted, and the above-identified patent reinstated as of November 2,2010 . This decision also constitutes notice that the fee has been accepted. An electronic copy of the petition and this decision has been created as an entry in the Image File Wrapper. Nevertheless, petitioner should print and retain an independent copy.

Telephone inquiries related to this electronic decision should be directed to the Electronic Business Center at 1-866-217-9197.

PTO/SB/66 (03-09)
Approved for use through 03/31/2012. OMB 0651-0016
U.S. Patent and Trademark Office: U.S. DEPARTMENT OF COMMERCE
Under the Paperwork Reduction Act of 1995, no persons are required to respond to a collection of information unless it displays valid OMB control number.

PETITION TO ACCEPT UNINTENTIONALLY DELAYED PAYMENT OF MAINTENANCE FEE IN AN EXPIRED PATENT (37 CFR 1.378(c))

Patent Number	Issue Date (YYYY-MM-DD)	Application Number	Filing Date (YYYY-MM-DD)	Docket Number (if applicable)
6,249,260	2001-06-19	09/356,073	1999-07-16	COM-121

CAUTION: Maintenance fee (and surcharge, if any) payment must correctly identify: (1) the patent number and (2) the application number of the actual U.S. application leading to issuance of that patent to ensure the fee(s) is/are associated with the correct patent. 37 CFR 1.366(c) and (d).

SMALL ENTITY

☐ Patentee claims, or has previously claimed, small entity status. See 37 CFR 1.27.

LOSS OF ENTITLEMENT TO SMALL ENTITY STATUS

☐ Patentee is no longer entitled to small entity status. See 37 CFR 1.27(g)

NOT Small Entity			Small Entity		
	Fee	Code		Fee	Code
○	3 ½ year	(1551)	○	3 ½ year	(2551)
◉	7 ½ year	(1552)	○	7 ½ year	(2552)
○	11 ½ year	(1553)	○	11 ½ year	(2553)

SURCHARGE

The surcharge required by 37 CFR 1.20(i)(2) (Fee Code 1558) must be paid as a condition of accepting unintentionally delayed payment of the maintenance fee.

MAINTENANCE FEE (37 CFR 1.20(e)-(g))

The appropriate maintenance fee must be submitted with this petition.

STATEMENT

THE UNDERSIGNED CERTIFIES THAT THE DELAY IN PAYMENT OF THE MAINTENANCE FEE TO THIS PATENT WAS UNINTENTIONAL

PETITIONER(S) REQUEST THAT THE DELAYED PAYMENT OF THE MAINTENANCE FEE BE ACCEPTED AND THE PATENT REINSTATED

THIS PORTION MUST BE COMPLETED BY THE SIGNATORY OR SIGNATORIES

37 CFR 1.378(d) states: "Any petition under this section must be signed by an attorney or agent registered to practice before the Patent and Trademark Office, or by the patentee, the assignee, or other party in interest."

I certify, in accordance with 37 CFR 1.4(d)(4) that I am

◉ An attorney or agent registered to practice before the Patent and Trademark Office

○ A sole patentee

○ A joint patentee; I certify that I am authorized to sign this submission on behalf of all the other patentees.

○ A joint patentee; all of whom are signing this e-petition

○ The assignee of record of the entire interest

PTO/SB/66 (03-09)
Approved for use through 03/31/2012. OMB 0651-0016
U.S. Patent and Trademark Office: U.S. DEPARTMENT OF COMMERCE
Under the Paperwork Reduction Act of 1995, no persons are required to respond to a collection of information unless it displays valid OMB control number.

Patent Practitioner			
A signature of the applicant or representative is required in accordance with 37 CFR 1.33 and 10.18. Please see 37 CFR 1.4(d) for the form of the signature			
Signature	/Leo Stanger/	Date (YYYY-MM-DD)	2010-11-02
Name	Leo Stanger	Registration Number	19188

This collection of information is required by 37 CFR 1.378(c). The information is required to obtain or retain a benefit by the public which is to file (and by the USPTO to process) an application. Confidentiality is governed by 35 U.S.C. 122 and 37 CFR 1.11 and 1.14. This collection is estimated to take 1 hour to complete, including gathering, preparing, and submitting the completed application form to the USPTO. Time will vary depending upon the individual case. Any comments on the amount of time you require to complete this form and/ or suggestions for reducing this burden, should be sent to the Chief Information Officer, U.S. Patent and Trademark Office, U.S. Department of Commerce, P.O. Box 1450, Alexandria, VA 22313-1450. DO NOT SEND FEES OR COMPLETED FORMS TO THIS ADDRESS. **This form can only be used when in conjunction with EFS-Web. If this form is mailed to the USPTO, it may cause delays in reinstating the patent.**

Privacy Act Statement

The Privacy Act of 1974 (P.L. 93-579) requires that you be given certain information in connection with your submission of the attached form related to a patent application or patent. Accordingly, pursuant to the requirements of the Act, please be advised that: (1) the general authority for the collection of this information is 35 U.S.C. 2(b)(2); (2) furnishing of the information solicited is voluntary; and (3) the principal purpose for which the information is used by the U.S. Patent and Trademark Office is to process and/or examine your submission related to a patent application or patent. If you do not furnish the requested information, the U.S. Patent and Trademark Office may not be able to process and/or examine your submission, which may result in termination of proceedings or abandonment of the application or expiration of the patent.

The information provided by you in this form will be subject to the following routine uses:

1. The information on this form will be treated confidentially to the extent allowed under the Freedom of Information Act (5 U.S.C. 552) and the Privacy Act (5 U.S.C. 552a). Records from this system of records may be disclosed to the Department of Justice to determine whether the Freedom of Information Act requires disclosure of these records.

2. A record from this system of records may be disclosed, as a routine use, in the course of presenting evidence to a court, magistrate, or administrative tribunal, including disclosures to opposing counsel in the course of settlement negotiations.

3. A record in this system of records may be disclosed, as a routine use, to a Member of Congress submitting a request involving an individual, to whom the record pertains, when the individual has requested assistance from the Member with respect to the subject matter of the record.

4. A record in this system of records may be disclosed, as a routine use, to a contractor of the Agency having need for the information in order to perform a contract. Recipients of information shall be required to comply with the requirements of the Privacy Act of 1974, as amended, pursuant to 5 U.S.C. 552a(m).

5. A record related to an International Application filed under the Patent Cooperation Treaty in this system of records may be disclosed, as a routine use, to the International Bureau of the World Intellectual Property Organization, pursuant to the Patent Cooperation Treaty.

6. A record in this system of records may be disclosed, as a routine use, to another federal agency for purposes of National Security review (35 U.S.C. 181) and for review pursuant to the Atomic Energy Act (42 U.S.C. 218(c)).

7. A record from this system of records may be disclosed, as a routine use, to the Administrator, General Services, or his/her designee, during an inspection of records conducted by GSA as part of that agency's responsibility to recommend improvements in records management practices and programs, under authority of 44 U.S.C. 2904 and 2906. Such disclosure shall be made in accordance with the GSA regulations governing inspection of records for this purpose, and any other relevant (i.e., GSA or Commerce) directive. Such disclosure shall not be used to make determinations about individuals.

8. A record from this system of records may be disclosed, as a routine use, to the public after either publication of the application pursuant to 35 U.S.C. 122(b) or issuance of a patent pursuant to 35 U.S.C. 151. Further, a record may be disclosed, subject to the limitations of 37 CFR 1.14, as a routine use, to the public if the record was filed in an application which became abandoned or in which the proceedings were terminated and which application is referenced by either a published application, an application open to public inspections or an issued patent.

9. A record from this system of records may be disclosed, as a routine use, to a Federal, State, or local law enforcement agency, if the USPTO becomes aware of a violation or potential violation of law or regulation.

UNITED STATES PATENT AND TRADEMARK OFFICE

Commissioner for Patents
United States Patent and Trademark Office
P.O. Box 1450
Alexandria, VA 22313-1450
www.uspto.gov

JOYCE KOSINSKI
PATENT ADMINISTRATOR
LORAL SPACE AND COMMUNICATIONS
655 DEEP VALLEY DRIVE - SUITE 303
ROLLING HILLS ESTATES CA 90274

MAILED
JUL 28 2011
OFFICE OF PETITIONS

In re Patent No. 6,427,172 :
Issued: July 30, 2002 :
Application No. 09/356,997 : ON PETITION
Filed: July 20, 1999 :
Attorney Docket No. CY-98055 :

This is a decision on the petition under 37 CFR 1.378(c), filed July 11, 2011, to accept the delayed payment of a maintenance fee for the above-identified patent.

The petition is **DISMISSED**.

If reconsideration of this decision is desired, a petition for reconsideration under 37 CFR 1.378(e) must be filed within TWO (2) MONTHS from the mail date of this decision. No extension of this two-month time limit can be granted under 37 CFR 1.136(a) or (b). This is **not** a final agency action within the meaning of 5 U.S.C. § 704.

Any petition for reconsideration of this decision must be accompanied by the petition fee of $400 as set forth in 37 CFR 1.17(f). The petition for reconsideration must include the lacking item(s) noted below, since, after a decision on the petition for reconsideration, no further reconsideration or review of the matter will be undertaken by the Commissioner.

A petition to accept the unintentionally delayed payment of a maintenance fee under 35 U.S.C. § 41(c) and 37 CFR 1.378(c) must be accompanied by: (1) a statement that the delay was unintentional; (2) payment of the appropriate maintenance fee, unless previously submitted; (3) payment of the surcharge set forth in 37 CFR 1.20(i)(2). The instant petition lacks item (1) of the above items

With regards to item (1) the instant petition is not signed. The statement required in item (1) has not been signed by petitioner. A grantable petition pursuant to 37 CFR 1.378(c) must include the required statement signed by:

1) An attorney or agent of record appointed in compliance with § 1.34(b);
2) A registered attorney or agent not of record who acts in a representative capacity under

the provisions of§ 1.34(a);
(3) The assignee of record of the entire interest, if there is an assignee of record of the entire interest;
(4) An assignee of record of an undivided part interest, and any assignee(s) of the remaining interest and any applicant retaining an interest, if there is an assignee of record of an undividing part interest; or
(5) **All of the applicants (§§ 1.42.1.43 and 1.47) for patent, unless there is an assignee of record of the entire interest and such assignee has taken action in the application in accordance with §§ 3.71 and 3.73.**

Petitioner has failed to sign the petition and therefore the petition submitted is considered improper.

If this petition is not renewed or if renewed and not granted, then petitioner may request a refund of the maintenance and surcharge fees paid. The fee for requesting reconsideration is not refundable.

A courtesy copy of this decision is being mailed to the address on the petition; however, all future correspondence will be mailed solely to the address of record.

Further correspondence with respect to this matter should be addressed as follows:

By Mail: Mail Stop PETITIONS
Commissioner for Patents
Post Office Box 1450
Alexandria, VA 22313-1450

By hand: U.S. Patent and Trademark Office
Customer Service Window, Mail Stop Petitions
Randolph Building
401 Dulany Street
Alexandria, VA 22314

The centralized facsimile number is (571) 273-8300.

Telephone inquiries should be directed to the undersigned at (571)-272-7751.

/Joan Olszewski/
Joan Olszewski
Petitions Examiner
Office of Petitions

cc: Telesat Network Services, Inc.
135 Routes 202/206
Bedminster, New Jersey 07921

UNITED STATES PATENT AND TRADEMARK OFFICE

Commissioner for Patents
United States Patent and Trademark Office
P.O. Box 1450
Alexandria, VA 22313-1450
www.uspto.gov

TELESAT - OFFICE OF GENERAL COUNSEL
1601 TELESAT COURT
OTTAWA, ONTARIO K1B 5P4 CA CANADA

MAILED
OCT 12 2011
OFFICE OF PETITIONS

In re Patent No. 6,427,172 :
Issued: July 30, 2002 :
Application No. 09/356,997 : ON PETITION
Filed: July 20, 1999 :
Attorney Docket No. CY-98055 :

This is a decision on the renewed petition under 37 CFR 1.378(c), filed September 28, 2011, to accept the delayed payment of a maintenance fee for the above-identified patent.

The petition is **GRANTED**.

This patent expired on July 31, 2010 for failure to pay the seven and one-half year maintenance fee. Since this petition was submitted within twenty-four months after the six-month grace period provided in 37 CFR 1.362(e), the petition was timely filed under the provisions of 37 CFR 1.378(c).

The maintenance fee is hereby accepted and the above-identified patent is reinstated as of the mail date of this decision.

It is not apparent whether the statement of unintentional delay was signed by a person who would have been in a position of knowing that the delay in filing a timely response was unintentional. Nevertheless, in accordance with 37 CFR 10.18, the statement is accepted as constituting a certification of unintentional delay. However, in the event that petitioner has no knowledge that the delay in paying the maintenance fee was in fact unintentional, petitioner must make such an inquiry to ascertain that, in fact, the delay was unintentional. If petitioner discovers that the delay in paying the maintenance fee was intentional, petitioner must so notify the Office. Further, it is not apparent whether the person signing the instant petition was ever given a power of attorney or authorization of agent in the above-identified patent. In accordance with 37 CFR 1.34(a), the signature appearing on the petition shall constitute a representation to the United States Patent and Trademark Office that he/she is authorized to represent the particular party in whose behalf he/she acts. While, a courtesy copy of this decision is being mailed to the address given on the petition, the Office will mail all future correspondence solely to the address of record.

Telephone inquiries concerning this decision should be directed to the undersigned at (571) 272-7751.

/Joan Olszewski/
Joan Olszewski
Petitions Examiner
Office of Petitions

cc: Janik Marcovici
99 Hawley Lane
Stratford, CT 06614

UNITED STATES PATENT AND TRADEMARK OFFICE

Commissioner for Patents
United States Patent and Trademark Office
P.O. Box 1450
Alexandria, VA 22313-1450
www.uspto.gov

MICROSOFT CORPORATION
ONE MICROSOFT WAY
REDMOND WA 98052-6399

MAILED

MAR 15 2011

OFFICE OF PETITIONS

In re Patent of Ozzie et al. :
Patent No. 6,640,241 :
Issued: October 28, 2003 : NOTICE
Application Number: 09/357,007 :
Filed: July 19, 1999 :
Attorney Docket Number: G0008/7000 // 313974.01

This is a notice regarding your request for acceptance of a fee deficiency submission under 37 CFR 1.28, filed on February 2, 2011.

The Office no longer investigates or rejects original or reissue patents under 37 CFR 1.56. **1098 Off. Gaz. Pat. Office 502 (January 3, 1989)**. Therefore, nothing in this Notice is intended to imply that an investigation was done.

Your fee deficiency submission under 37 CFR 1.28 is hereby **ACCEPTED**.

This patent is no longer entitled to small entity status. Accordingly, all future fees paid in this patent must be paid at the large entity rate.

Inquiries related to this communication should be directed to the undersigned at (571) 272-3230.

Shirene Willis Brantley

Shirene Willis Brantley
Senior Petitions Attorney
Office of Petitions

PTO/SB/66 (03-09)
Approved for use through 03/31/2012. OMB 0651-0016
U.S. Patent and Trademark Office: U.S. DEPARTMENT OF COMMERCE
Under the Paperwork Reduction Act of 1995, no persons are required to respond to a collection of information unless it displays valid OMB control number.

PETITION TO ACCEPT UNINTENTIONALLY DELAYED PAYMENT OF MAINTENANCE FEE IN AN EXPIRED PATENT (37 CFR 1.378(c))

Patent Number	Issue Date (YYYY-MM-DD)	Application Number	Filing Date (YYYY-MM-DD)	Docket Number (if applicable)
6453364	2002-09-17	09357261	1999-07-20	

CAUTION: Maintenance fee (and surcharge, if any) payment must correctly identify: (1) the patent number and (2) the application number of the actual U.S. application leading to issuance of that patent to ensure the fee(s) is/are associated with the correct patent. 37 CFR 1.366(c) and (d).

SMALL ENTITY

☐ Patentee claims, or has previously claimed, small entity status. See 37 CFR 1.27.

LOSS OF ENTITLEMENT TO SMALL ENTITY STATUS

☐ Patentee is no longer entitled to small entity status. See 37 CFR 1.27(g)

NOT Small Entity			Small Entity		
	Fee	Code		Fee	Code
○	3 ½ year	(1551)	○	3 ½ year	(2551)
◉	7 ½ year	(1552)	○	7 ½ year	(2552)
○	11 ½ year	(1553)	○	11 ½ year	(2553)

SURCHARGE

The surcharge required by 37 CFR 1.20(i)(2) (Fee Code 1558) must be paid as a condition of accepting unintentionally delayed payment of the maintenance fee.

MAINTENANCE FEE (37 CFR 1.20(e)-(g))

The appropriate maintenance fee must be submitted with this petition.

STATEMENT

THE UNDERSIGNED CERTIFIES THAT THE DELAY IN PAYMENT OF THE MAINTENANCE FEE TO THIS PATENT WAS UNINTENTIONAL

PETITIONER(S) REQUEST THAT THE DELAYED PAYMENT OF THE MAINTENANCE FEE BE ACCEPTED AND THE PATENT REINSTATED

THIS PORTION MUST BE COMPLETED BY THE SIGNATORY OR SIGNATORIES

37 CFR 1.378(d) states: "Any petition under this section must be signed by an attorney or agent registered to practice before the Patent and Trademark Office, or by the patentee, the assignee, or other party in interest."

I certify, in accordance with 37 CFR 1.4(d)(4) that I am

◉ An attorney or agent registered to practice before the Patent and Trademark Office

○ A sole patentee

○ A joint patentee; I certify that I am authorized to sign this submission on behalf of all the other patentees.

○ A joint patentee; all of whom are signing this e-petition

○ The assignee of record of the entire interest

PTO/SB/66 (03-09)
Approved for use through 03/31/2012. OMB 0651-0016
U.S. Patent and Trademark Office: U.S. DEPARTMENT OF COMMERCE
Under the Paperwork Reduction Act of 1995, no persons are required to respond to a collection of information unless it displays valid OMB control number.

Patent Practitioner			
A signature of the applicant or representative is required in accordance with 37 CFR 1.33 and 10.18. Please see 37 CFR 1.4(d) for the form of the signature			
Signature	/Marvin Motsenbocker/	Date (YYYY-MM-DD)	2012-03-22
Name	Marvin A. Motsenbocker	Registration Number	36614

This collection of information is required by 37 CFR 1.378(c). The information is required to obtain or retain a benefit by the public which is to file (and by the USPTO to process) an application. Confidentiality is governed by 35 U.S.C. 122 and 37 CFR 1.11 and 1.14. This collection is estimated to take 1 hour to complete, including gathering, preparing, and submitting the completed application form to the USPTO. Time will vary depending upon the individual case. Any comments on the amount of time you require to complete this form and/ or suggestions for reducing this burden, should be sent to the Chief Information Officer, U.S. Patent and Trademark Office, U.S. Department of Commerce, P.O. Box 1450, Alexandria, VA 22313-1450. DO NOT SEND FEES OR COMPLETED FORMS TO THIS ADDRESS. **This form can only be used when in conjunction with EFS-Web. If this form is mailed to the USPTO, it may cause delays in reinstating the patent.**

Privacy Act Statement

The Privacy Act of 1974 (P.L. 93-579) requires that you be given certain information in connection with your submission of the attached form related to a patent application or patent. Accordingly, pursuant to the requirements of the Act, please be advised that: (1) the general authority for the collection of this information is 35 U.S.C. 2(b)(2); (2) furnishing of the information solicited is voluntary; and (3) the principal purpose for which the information is used by the U.S. Patent and Trademark Office is to process and/or examine your submission related to a patent application or patent. If you do not furnish the requested information, the U.S. Patent and Trademark Office may not be able to process and/or examine your submission, which may result in termination of proceedings or abandonment of the application or expiration of the patent.

The information provided by you in this form will be subject to the following routine uses:

1. The information on this form will be treated confidentially to the extent allowed under the Freedom of Information Act (5 U.S.C. 552) and the Privacy Act (5 U.S.C. 552a). Records from this system of records may be disclosed to the Department of Justice to determine whether the Freedom of Information Act requires disclosure of these records.

2. A record from this system of records may be disclosed, as a routine use, in the course of presenting evidence to a court, magistrate, or administrative tribunal, including disclosures to opposing counsel in the course of settlement negotiations.

3. A record in this system of records may be disclosed, as a routine use, to a Member of Congress submitting a request involving an individual, to whom the record pertains, when the individual has requested assistance from the Member with respect to the subject matter of the record.

4. A record in this system of records may be disclosed, as a routine use, to a contractor of the Agency having need for the information in order to perform a contract. Recipients of information shall be required to comply with the requirements of the Privacy Act of 1974, as amended, pursuant to 5 U.S.C. 552a(m).

5. A record related to an International Application filed under the Patent Cooperation Treaty in this system of records may be disclosed, as a routine use, to the International Bureau of the World Intellectual Property Organization, pursuant to the Patent Cooperation Treaty.

6. A record in this system of records may be disclosed, as a routine use, to another federal agency for purposes of National Security review (35 U.S.C. 181) and for review pursuant to the Atomic Energy Act (42 U.S.C. 218(c)).

7. A record from this system of records may be disclosed, as a routine use, to the Administrator, General Services, or his/her designee, during an inspection of records conducted by GSA as part of that agency's responsibility to recommend improvements in records management practices and programs, under authority of 44 U.S.C. 2904 and 2906. Such disclosure shall be made in accordance with the GSA regulations governing inspection of records for this purpose, and any other relevant (i.e., GSA or Commerce) directive. Such disclosure shall not be used to make determinations about individuals.

8. A record from this system of records may be disclosed, as a routine use, to the public after either publication of the application pursuant to 35 U.S.C. 122(b) or issuance of a patent pursuant to 35 U.S.C. 151. Further, a record may be disclosed, subject to the limitations of 37 CFR 1.14, as a routine use, to the public if the record was filed in an application which became abandoned or in which the proceedings were terminated and which application is referenced by either a published application, an application open to public inspections or an issued patent.

9. A record from this system of records may be disclosed, as a routine use, to a Federal, State, or local law enforcement agency, if the USPTO becomes aware of a violation or potential violation of law or regulation.

UNITED STATES PATENT AND TRADEMARK OFFICE

Commissioner for Patents
United States Patent and Trademark Office
P.O. Box 1450
Alexandria, VA 22313-1450
www.uspto.gov

In re Patent No. 6453364
Issue Date: September 17,2002
Application No. 09357261
Filed: July 20,1999
Attorney Docket No. 4085

:
:DECISION GRANTING PETITION
:UNDER 37 CFR 1.378(c)
:

This is a decision on the electronic petition, filed March 22,2012 ,under 37 CFR 1.378(c) to accept the unintentionally delayed payment of the 7.5 year maintenance fee for the above-identified patent.

The petition is **GRANTED**.

The maintenance fee is accepted, and the above-identified patent reinstated as of March 22,2012 . This decision also constitutes notice that the fee has been accepted. An electronic copy of the petition and this decision has been created as an entry in the Image File Wrapper. Nevertheless, petitioner should print and retain an independent copy.

Telephone inquiries related to this electronic decision should be directed to the Electronic Business Center at 1-866-217-9197.

PTO/SB/66 (03-09)
Approved for use through 03/31/2012. OMB 0651-0016
U.S. Patent and Trademark Office: U.S. DEPARTMENT OF COMMERCE
Under the Paperwork Reduction Act of 1995, no persons are required to respond to a collection of information unless it displays valid OMB control number.

PETITION TO ACCEPT UNINTENTIONALLY DELAYED PAYMENT OF MAINTENANCE FEE IN AN EXPIRED PATENT (37 CFR 1.378(c))

Patent Number	Issue Date (YYYY-MM-DD)	Application Number	Filing Date (YYYY-MM-DD)	Docket Number (if applicable)
6,298,108	2001-10-02	09/358,744	1999-07-21	1449.002

CAUTION: Maintenance fee (and surcharge, if any) payment must correctly identify: (1) the patent number and (2) the application number of the actual U.S. application leading to issuance of that patent to ensure the fee(s) is/are associated with the correct patent. 37 CFR 1.366(c) and (d).

SMALL ENTITY

☒ Patentee claims, or has previously claimed, small entity status. See 37 CFR 1.27.

LOSS OF ENTITLEMENT TO SMALL ENTITY STATUS

☐ Patentee is no longer entitled to small entity status. See 37 CFR 1.27(g)

NOT Small Entity	Fee	Code	Small Entity	Fee	Code
◯	3 ½ year	(1551)	◯	3 ½ year	(2551)
◯	7 ½ year	(1552)	◉	7 ½ year	(2552)
◯	11 ½ year	(1553)	◯	11 ½ year	(2553)

SURCHARGE

The surcharge required by 37 CFR 1.20(i)(2) (Fee Code 1558) must be paid as a condition of accepting unintentionally delayed payment of the maintenance fee.

MAINTENANCE FEE (37 CFR 1.20(e)-(g))

The appropriate maintenance fee must be submitted with this petition.

STATEMENT

THE UNDERSIGNED CERTIFIES THAT THE DELAY IN PAYMENT OF THE MAINTENANCE FEE TO THIS PATENT WAS UNINTENTIONAL

PETITIONER(S) REQUEST THAT THE DELAYED PAYMENT OF THE MAINTENANCE FEE BE ACCEPTED AND THE PATENT REINSTATED

THIS PORTION MUST BE COMPLETED BY THE SIGNATORY OR SIGNATORIES

37 CFR 1.378(d) states: "Any petition under this section must be signed by an attorney or agent registered to practice before the Patent and Trademark Office, or by the patentee, the assignee, or other party in interest."

I certify, in accordance with 37 CFR 1.4(d)(4) that I am

◉ An attorney or agent registered to practice before the Patent and Trademark Office

◯ A sole patentee

◯ A joint patentee; I certify that I am authorized to sign this submission on behalf of all the other patentees.

◯ A joint patentee; all of whom are signing this e-petition

◯ The assignee of record of the entire interest

PTO/SB/66 (03-09)
Approved for use through 03/31/2012. OMB 0651-0016
U.S. Patent and Trademark Office: U.S. DEPARTMENT OF COMMERCE
Under the Paperwork Reduction Act of 1995, no persons are required to respond to a collection of information unless it displays valid OMB control number.

Patent Practitioner			
A signature of the applicant or representative is required in accordance with 37 CFR 1.33 and 10.18. Please see 37 CFR 1.4(d) for the form of the signature			
Signature	/FLOYD E. IVEY/	Date (YYYY-MM-DD)	2011-03-11
Name	FLOYD E. IVEY	Registration Number	35552

This collection of information is required by 37 CFR 1.378(c). The information is required to obtain or retain a benefit by the public which is to file (and by the USPTO to process) an application. Confidentiality is governed by 35 U.S.C. 122 and 37 CFR 1.11 and 1.14. This collection is estimated to take 1 hour to complete, including gathering, preparing, and submitting the completed application form to the USPTO. Time will vary depending upon the individual case. Any comments on the amount of time you require to complete this form and/ or suggestions for reducing this burden, should be sent to the Chief Information Officer, U.S. Patent and Trademark Office, U.S. Department of Commerce, P.O. Box 1450, Alexandria, VA 22313-1450. DO NOT SEND FEES OR COMPLETED FORMS TO THIS ADDRESS. **This form can only be used when in conjunction with EFS-Web. If this form is mailed to the USPTO, it may cause delays in reinstating the patent.**

Privacy Act Statement

The Privacy Act of 1974 (P.L. 93-579) requires that you be given certain information in connection with your submission of the attached form related to a patent application or patent. Accordingly, pursuant to the requirements of the Act, please be advised that: (1) the general authority for the collection of this information is 35 U.S.C. 2(b)(2); (2) furnishing of the information solicited is voluntary; and (3) the principal purpose for which the information is used by the U.S. Patent and Trademark Office is to process and/or examine your submission related to a patent application or patent. If you do not furnish the requested information, the U.S. Patent and Trademark Office may not be able to process and/or examine your submission, which may result in termination of proceedings or abandonment of the application or expiration of the patent.

The information provided by you in this form will be subject to the following routine uses:

1. The information on this form will be treated confidentially to the extent allowed under the Freedom of Information Act (5 U.S.C. 552) and the Privacy Act (5 U.S.C. 552a). Records from this system of records may be disclosed to the Department of Justice to determine whether the Freedom of Information Act requires disclosure of these records.

2. A record from this system of records may be disclosed, as a routine use, in the course of presenting evidence to a court, magistrate, or administrative tribunal, including disclosures to opposing counsel in the course of settlement negotiations.

3. A record in this system of records may be disclosed, as a routine use, to a Member of Congress submitting a request involving an individual, to whom the record pertains, when the individual has requested assistance from the Member with respect to the subject matter of the record.

4. A record in this system of records may be disclosed, as a routine use, to a contractor of the Agency having need for the information in order to perform a contract. Recipients of information shall be required to comply with the requirements of the Privacy Act of 1974, as amended, pursuant to 5 U.S.C. 552a(m).

5. A record related to an International Application filed under the Patent Cooperation Treaty in this system of records may be disclosed, as a routine use, to the International Bureau of the World Intellectual Property Organization, pursuant to the Patent Cooperation Treaty.

6. A record in this system of records may be disclosed, as a routine use, to another federal agency for purposes of National Security review (35 U.S.C. 181) and for review pursuant to the Atomic Energy Act (42 U.S.C. 218(c)).

7. A record from this system of records may be disclosed, as a routine use, to the Administrator, General Services, or his/her designee, during an inspection of records conducted by GSA as part of that agency's responsibility to recommend improvements in records management practices and programs, under authority of 44 U.S.C. 2904 and 2906. Such disclosure shall be made in accordance with the GSA regulations governing inspection of records for this purpose, and any other relevant (i.e., GSA or Commerce) directive. Such disclosure shall not be used to make determinations about individuals.

8. A record from this system of records may be disclosed, as a routine use, to the public after either publication of the application pursuant to 35 U.S.C. 122(b) or issuance of a patent pursuant to 35 U.S.C. 151. Further, a record may be disclosed, subject to the limitations of 37 CFR 1.14, as a routine use, to the public if the record was filed in an application which became abandoned or in which the proceedings were terminated and which application is referenced by either a published application, an application open to public inspections or an issued patent.

9. A record from this system of records may be disclosed, as a routine use, to a Federal, State, or local law enforcement agency, if the USPTO becomes aware of a violation or potential violation of law or regulation.

UNITED STATES PATENT AND TRADEMARK OFFICE

Commissioner for Patents
United States Patent and Trademark Office
P.O. Box 1450
Alexandria, VA 22313-1450
www.uspto.gov

In re Patent No. 6298108
Issue Date: October 2,2001
Application No. 09358744
Filed: July 21,1999
Attorney Docket No.

:
:DECISION GRANTING PETITION
:UNDER 37 CFR 1.378(c)
:

This is a decision on the electronic petition, filed March 11,2011 ,under 37 CFR 1.378(c) to accept the unintentionally delayed payment of the 7.5 year maintenance fee for the above-identified patent.

The petition is **GRANTED**.

The maintenance fee is accepted, and the above-identified patent reinstated as of March 11,2011 . This decision also constitutes notice that the fee has been accepted. An electronic copy of the petition and this decision has been created as an entry in the Image File Wrapper. Nevertheless, petitioner should print and retain an independent copy.

Telephone inquiries related to this electronic decision should be directed to the Electronic Business Center at 1-866-217-9197.

UNITED STATES PATENT AND TRADEMARK OFFICE

Commissioner for Patents
United States Patent and Trademark Office
P.O. Box 1450
Alexandria, VA 22313-1450
www.uspto.gov

EDELL, SHAPIRO & FINNAN, LLC
1901 RESEARCH BOULEVARD
SUITE 400
ROCKVILLE MD 20850

MAILED
OCT 07 2011
OFFICE OF PETITIONS

In re Patent No. 6,751,729 :
Issued: June 15, 2004 :
Application No. 09/359,570 : ON PETITION
Filed: July 22, 1999 :
Attorney Docket No. 10241/002001 :

This is a notice regarding your request for acceptance of a fee deficiency submission under 37 CFR 1.28 filed September 13, 2011.

On September 1, 1998, the Court of Appeals for the Federal Circuit held that 37 CFR 1.28(c) is the sole provision governing the time for correction of the erroneous payment of the issue fee as a small entity. **See DH Technology v. Synergystex International, Inc. 154 F.3d 1333, 47 USPQ2d 1865 (Fed. Cir. Sept. 1, 1998).**

The Office no longer investigates or rejects original or reissue applications under 37 CFR 1.56. **1098 Off. Gaz. Pat. Office 502 (January 3, 1989).** Therefore, nothing in this Notice is intended to imply that an investigation was done.

Your fee deficiency submission under 37 CFR 1.28 is hereby **ACCEPTED.**

This patent is no longer entitled to small entity status. Accordingly, all future fees paid in this patent must be paid at the large entity rate.

It is not apparent whether the person signing the instant petition was ever given a power of attorney or authorization of agent regarding this patent. In accordance with 37 CFR 1.34(a), the signature appearing on the petition shall constitute a representation to the United States Patent and Trademark Office that he/she is authorized to represent the particular party in whose behalf he/she acts. Additionally, the address given on the petition differs from the address of record. A courtesy copy of this decision is being mailed to the address given on the petition; however, the Office will mail all future correspondence solely to the address of record.

Telephone inquiries concerning this decision should be directed to the undersigned at (571) 272-7751.

/Joan Olszewski/
Joan Olszewski
Petitions Examiner
Office of Petitions

cc: Adam J. Cermak
127 South Peyton Street, Suite 210
Alexandria, Virginia 22314

UNITED STATES PATENT AND TRADEMARK OFFICE

Commissioner for Patents
United States Patent and Trademark Office
P.O. Box 1450
Alexandria, VA 22313-1450
www.uspto.gov

In re Patent No. 6366772
Issue Date: April 2,2002
Application No. 09359965
Filed: July 22,1999
Attorney Docket No. 231/289

:
:DECISION GRANTING PETITION
:UNDER 37 CFR 1.378(c)
:

This is a decision on the electronic petition, filed October 18,2010 ,under 37 CFR 1.378(c) to accept the unintentionally delayed payment of the 7.5 year maintenance fee for the above-identified patent.

The petition is **GRANTED**.

The maintenance fee is accepted, and the above-identified patent reinstated as of October 18,2010 . This decision also constitutes notice that the fee has been accepted. An electronic copy of the petition and this decision has been created as an entry in the Image File Wrapper. Nevertheless, petitioner should print and retain an independent copy.

Telephone inquiries related to this electronic decision should be directed to the Electronic Business Center at 1-866-217-9197.

PTO/SB/66 (03-09)
Approved for use through 03/31/2012. OMB 0651-0016
U.S. Patent and Trademark Office: U.S. DEPARTMENT OF COMMERCE
Under the Paperwork Reduction Act of 1995, no persons are required to respond to a collection of information unless it displays valid OMB control number.

PETITION TO ACCEPT UNINTENTIONALLY DELAYED PAYMENT OF MAINTENANCE FEE IN AN EXPIRED PATENT (37 CFR 1.378(c))

Patent Number	Issue Date (YYYY-MM-DD)	Application Number	Filing Date (YYYY-MM-DD)	Docket Number (if applicable)
6366772	2002-04-02	09359965	1999-07-22	231/289

CAUTION: Maintenance fee (and surcharge, if any) payment must correctly identify: (1) the patent number and (2) the application number of the actual U.S. application leading to issuance of that patent to ensure the fee(s) is/are associated with the correct patent. 37 CFR 1.366(c) and (d).

SMALL ENTITY

☐ Patentee claims, or has previously claimed, small entity status. See 37 CFR 1.27.

LOSS OF ENTITLEMENT TO SMALL ENTITY STATUS

☐ Patentee is no longer entitled to small entity status. See 37 CFR 1.27(g)

NOT Small Entity			Small Entity		
	Fee	Code		Fee	Code
○	3 ½ year	(1551)	○	3 ½ year	(2551)
◉	7 ½ year	(1552)	○	7 ½ year	(2552)
○	11 ½ year	(1553)	○	11 ½ year	(2553)

SURCHARGE

The surcharge required by 37 CFR 1.20(i)(2) (Fee Code 1558) must be paid as a condition of accepting unintentionally delayed payment of the maintenance fee.

MAINTENANCE FEE (37 CFR 1.20(e)-(g))

The appropriate maintenance fee must be submitted with this petition.

STATEMENT

THE UNDERSIGNED CERTIFIES THAT THE DELAY IN PAYMENT OF THE MAINTENANCE FEE TO THIS PATENT WAS UNINTENTIONAL

PETITIONER(S) REQUEST THAT THE DELAYED PAYMENT OF THE MAINTENANCE FEE BE ACCEPTED AND THE PATENT REINSTATED

THIS PORTION MUST BE COMPLETED BY THE SIGNATORY OR SIGNATORIES

37 CFR 1.378(d) states: "Any petition under this section must be signed by an attorney or agent registered to practice before the Patent and Trademark Office, or by the patentee, the assignee, or other party in interest."

I certify, in accordance with 37 CFR 1.4(d)(4) that I am

◉ An attorney or agent registered to practice before the Patent and Trademark Office

○ A sole patentee

○ A joint patentee; I certify that I am authorized to sign this submission on behalf of all the other patentees.

○ A joint patentee; all of whom are signing this e-petition

○ The assignee of record of the entire interest

PTO/SB/66 (03-09)
Approved for use through 03/31/2012. OMB 0651-0016
U.S. Patent and Trademark Office: U.S. DEPARTMENT OF COMMERCE
Under the Paperwork Reduction Act of 1995, no persons are required to respond to a collection of information unless it displays valid OMB control number.

Patent Practitioner			
A signature of the applicant or representative is required in accordance with 37 CFR 1.33 and 10.18. Please see 37 CFR 1.4(d) for the form of the signature			
Signature	/Kendal M. Sheets/	Date (YYYY-MM-DD)	2010-10-15
Name	Kendal M. Sheets	Registration Number	47077

This collection of information is required by 37 CFR 1.378(c). The information is required to obtain or retain a benefit by the public which is to file (and by the USPTO to process) an application. Confidentiality is governed by 35 U.S.C. 122 and 37 CFR 1.11 and 1.14. This collection is estimated to take 1 hour to complete, including gathering, preparing, and submitting the completed application form to the USPTO. Time will vary depending upon the individual case. Any comments on the amount of time you require to complete this form and/ or suggestions for reducing this burden, should be sent to the Chief Information Officer, U.S. Patent and Trademark Office, U.S. Department of Commerce, P.O. Box 1450, Alexandria, VA 22313-1450. DO NOT SEND FEES OR COMPLETED FORMS TO THIS ADDRESS. **This form can only be used when in conjunction with EFS-Web. If this form is mailed to the USPTO, it may cause delays in reinstating the patent.**

Privacy Act Statement

The Privacy Act of 1974 (P.L. 93-579) requires that you be given certain information in connection with your submission of the attached form related to a patent application or patent. Accordingly, pursuant to the requirements of the Act, please be advised that: (1) the general authority for the collection of this information is 35 U.S.C. 2(b)(2); (2) furnishing of the information solicited is voluntary; and (3) the principal purpose for which the information is used by the U.S. Patent and Trademark Office is to process and/or examine your submission related to a patent application or patent. If you do not furnish the requested information, the U.S. Patent and Trademark Office may not be able to process and/or examine your submission, which may result in termination of proceedings or abandonment of the application or expiration of the patent.

The information provided by you in this form will be subject to the following routine uses:

1. The information on this form will be treated confidentially to the extent allowed under the Freedom of Information Act (5 U.S.C. 552) and the Privacy Act (5 U.S.C. 552a). Records from this system of records may be disclosed to the Department of Justice to determine whether the Freedom of Information Act requires disclosure of these records.

2. A record from this system of records may be disclosed, as a routine use, in the course of presenting evidence to a court, magistrate, or administrative tribunal, including disclosures to opposing counsel in the course of settlement negotiations.

3. A record in this system of records may be disclosed, as a routine use, to a Member of Congress submitting a request involving an individual, to whom the record pertains, when the individual has requested assistance from the Member with respect to the subject matter of the record.

4. A record in this system of records may be disclosed, as a routine use, to a contractor of the Agency having need for the information in order to perform a contract. Recipients of information shall be required to comply with the requirements of the Privacy Act of 1974, as amended, pursuant to 5 U.S.C. 552a(m).

5. A record related to an International Application filed under the Patent Cooperation Treaty in this system of records may be disclosed, as a routine use, to the International Bureau of the World Intellectual Property Organization, pursuant to the Patent Cooperation Treaty.

6. A record in this system of records may be disclosed, as a routine use, to another federal agency for purposes of National Security review (35 U.S.C. 181) and for review pursuant to the Atomic Energy Act (42 U.S.C. 218(c)).

7. A record from this system of records may be disclosed, as a routine use, to the Administrator, General Services, or his/her designee, during an inspection of records conducted by GSA as part of that agency's responsibility to recommend improvements in records management practices and programs, under authority of 44 U.S.C. 2904 and 2906. Such disclosure shall be made in accordance with the GSA regulations governing inspection of records for this purpose, and any other relevant (i.e., GSA or Commerce) directive. Such disclosure shall not be used to make determinations about individuals.

8. A record from this system of records may be disclosed, as a routine use, to the public after either publication of the application pursuant to 35 U.S.C. 122(b) or issuance of a patent pursuant to 35 U.S.C. 151. Further, a record may be disclosed, subject to the limitations of 37 CFR 1.14, as a routine use, to the public if the record was filed in an application which became abandoned or in which the proceedings were terminated and which application is referenced by either a published application, an application open to public inspections or an issued patent.

9. A record from this system of records may be disclosed, as a routine use, to a Federal, State, or local law enforcement agency, if the USPTO becomes aware of a violation or potential violation of law or regulation.

UNITED STATES PATENT AND TRADEMARK OFFICE

Commissioner for Patents
United States Patent and Trademark Office
P.O. Box 1450
Alexandria, VA 22313-1450
www.uspto.gov

In re Patent No. 6114153
Issue Date: September 5,2000
Application No. 09360581
Filed: July 26,1999
Attorney Docket No.

:
:DECISION GRANTING PETITION
:UNDER 37 CFR 1.378(c)
:

This is a decision on the electronic petition, filed September 3,2010 ,under 37 CFR 1.378(c) to accept the unintentionally delayed payment of the 7.5 year maintenance fee for the above-identified patent.

The petition is **GRANTED**.

The maintenance fee is accepted, and the above-identified patent reinstated as of September 3,2010 . This decision also constitutes notice that the fee has been accepted. An electronic copy of the petition and this decision has been created as an entry in the Image File Wrapper. Nevertheless, petitioner should print and retain an independent copy.

Telephone inquiries related to this electronic decision should be directed to the Electronic Business Center at 1-866-217-9197.

PTO/SB/66 (03-09)
Approved for use through 03/31/2012. OMB 0651-0016
U.S. Patent and Trademark Office: U.S. DEPARTMENT OF COMMERCE
Under the Paperwork Reduction Act of 1995, no persons are required to respond to a collection of information unless it displays valid OMB control number.

PETITION TO ACCEPT UNINTENTIONALLY DELAYED PAYMENT OF MAINTENANCE FEE IN AN EXPIRED PATENT (37 CFR 1.378(c))

Patent Number	Issue Date (YYYY-MM-DD)	Application Number	Filing Date (YYYY-MM-DD)	Docket Number (if applicable)
6114153	2000-09-05	09/360,581	1999-07-26	111424.124US1

CAUTION: Maintenance fee (and surcharge, if any) payment must correctly identify: (1) the patent number and (2) the application number of the actual U.S. application leading to issuance of that patent to ensure the fee(s) is/are associated with the correct patent. 37 CFR 1.366(c) and (d).

SMALL ENTITY

☐ Patentee claims, or has previously claimed, small entity status. See 37 CFR 1.27.

LOSS OF ENTITLEMENT TO SMALL ENTITY STATUS

☐ Patentee is no longer entitled to small entity status. See 37 CFR 1.27(g)

NOT Small Entity

	Fee	Code
○	3 ½ year	(1551)
◉	7 ½ year	(1552)
○	11 ½ year	(1553)

Small Entity

	Fee	Code
○	3 ½ year	(2551)
○	7 ½ year	(2552)
○	11 ½ year	(2553)

SURCHARGE

The surcharge required by 37 CFR 1.20(i)(2) (Fee Code 1558) must be paid as a condition of accepting unintentionally delayed payment of the maintenance fee.

MAINTENANCE FEE (37 CFR 1.20(e)-(g))

The appropriate maintenance fee must be submitted with this petition.

STATEMENT

THE UNDERSIGNED CERTIFIES THAT THE DELAY IN PAYMENT OF THE MAINTENANCE FEE TO THIS PATENT WAS UNINTENTIONAL

PETITIONER(S) REQUEST THAT THE DELAYED PAYMENT OF THE MAINTENANCE FEE BE ACCEPTED AND THE PATENT REINSTATED

THIS PORTION MUST BE COMPLETED BY THE SIGNATORY OR SIGNATORIES

37 CFR 1.378(d) states: "Any petition under this section must be signed by an attorney or agent registered to practice before the Patent and Trademark Office, or by the patentee, the assignee, or other party in interest."

I certify, in accordance with 37 CFR 1.4(d)(4) that I am

◉ An attorney or agent registered to practice before the Patent and Trademark Office

○ A sole patentee

○ A joint patentee; I certify that I am authorized to sign this submission on behalf of all the other patentees.

○ A joint patentee; all of whom are signing this e-petition

○ The assignee of record of the entire interest

PTO/SB/66 (03-09)
Approved for use through 03/31/2012. OMB 0651-0016
U.S. Patent and Trademark Office: U.S. DEPARTMENT OF COMMERCE
Under the Paperwork Reduction Act of 1995, no persons are required to respond to a collection of information unless it displays valid OMB control number.

Patent Practitioner			
A signature of the applicant or representative is required in accordance with 37 CFR 1.33 and 10.18. Please see 37 CFR 1.4(d) for the form of the signature			
Signature	/Hollie L. Baker/	Date (YYYY-MM-DD)	2010-09-03
Name	Hollie L. Baker	Registration Number	31321

This collection of information is required by 37 CFR 1.378(c). The information is required to obtain or retain a benefit by the public which is to file (and by the USPTO to process) an application. Confidentiality is governed by 35 U.S.C. 122 and 37 CFR 1.11 and 1.14. This collection is estimated to take 1 hour to complete, including gathering, preparing, and submitting the completed application form to the USPTO. Time will vary depending upon the individual case. Any comments on the amount of time you require to complete this form and/ or suggestions for reducing this burden, should be sent to the Chief Information Officer, U.S. Patent and Trademark Office, U.S. Department of Commerce, P.O. Box 1450, Alexandria, VA 22313-1450. DO NOT SEND FEES OR COMPLETED FORMS TO THIS ADDRESS. **This form can only be used when in conjunction with EFS-Web. If this form is mailed to the USPTO, it may cause delays in reinstating the patent.**

Privacy Act Statement

The Privacy Act of 1974 (P.L. 93-579) requires that you be given certain information in connection with your submission of the attached form related to a patent application or patent. Accordingly, pursuant to the requirements of the Act, please be advised that: (1) the general authority for the collection of this information is 35 U.S.C. 2(b)(2); (2) furnishing of the information solicited is voluntary; and (3) the principal purpose for which the information is used by the U.S. Patent and Trademark Office is to process and/or examine your submission related to a patent application or patent. If you do not furnish the requested information, the U.S. Patent and Trademark Office may not be able to process and/or examine your submission, which may result in termination of proceedings or abandonment of the application or expiration of the patent.

The information provided by you in this form will be subject to the following routine uses:

1. The information on this form will be treated confidentially to the extent allowed under the Freedom of Information Act (5 U.S.C. 552) and the Privacy Act (5 U.S.C. 552a). Records from this system of records may be disclosed to the Department of Justice to determine whether the Freedom of Information Act requires disclosure of these records.

2. A record from this system of records may be disclosed, as a routine use, in the course of presenting evidence to a court, magistrate, or administrative tribunal, including disclosures to opposing counsel in the course of settlement negotiations.

3. A record in this system of records may be disclosed, as a routine use, to a Member of Congress submitting a request involving an individual, to whom the record pertains, when the individual has requested assistance from the Member with respect to the subject matter of the record.

4. A record in this system of records may be disclosed, as a routine use, to a contractor of the Agency having need for the information in order to perform a contract. Recipients of information shall be required to comply with the requirements of the Privacy Act of 1974, as amended, pursuant to 5 U.S.C. 552a(m).

5. A record related to an International Application filed under the Patent Cooperation Treaty in this system of records may be disclosed, as a routine use, to the International Bureau of the World Intellectual Property Organization, pursuant to the Patent Cooperation Treaty.

6. A record in this system of records may be disclosed, as a routine use, to another federal agency for purposes of National Security review (35 U.S.C. 181) and for review pursuant to the Atomic Energy Act (42 U.S.C. 218(c)).

7. A record from this system of records may be disclosed, as a routine use, to the Administrator, General Services, or his/her designee, during an inspection of records conducted by GSA as part of that agency's responsibility to recommend improvements in records management practices and programs, under authority of 44 U.S.C. 2904 and 2906. Such disclosure shall be made in accordance with the GSA regulations governing inspection of records for this purpose, and any other relevant (i.e., GSA or Commerce) directive. Such disclosure shall not be used to make determinations about individuals.

8. A record from this system of records may be disclosed, as a routine use, to the public after either publication of the application pursuant to 35 U.S.C. 122(b) or issuance of a patent pursuant to 35 U.S.C. 151. Further, a record may be disclosed, subject to the limitations of 37 CFR 1.14, as a routine use, to the public if the record was filed in an application which became abandoned or in which the proceedings were terminated and which application is referenced by either a published application, an application open to public inspections or an issued patent.

9. A record from this system of records may be disclosed, as a routine use, to a Federal, State, or local law enforcement agency, if the USPTO becomes aware of a violation or potential violation of law or regulation.

UNITED STATES PATENT AND TRADEMARK OFFICE

Commissioner for Patents
United States Patent and Trademark Office
P.O. Box 1450
Alexandria, VA 22313-1450
www.uspto.gov

In re Patent No. 6440667
Issue Date: August 27,2002
Application No. 09362089
Filed: July 28,1999
Attorney Docket No. PM-254814

:
:DECISION GRANTING PETITION
:UNDER 37 CFR 1.378(c)
:

This is a decision on the electronic petition, filed January 25,2011 ,under 37 CFR 1.378(c) to accept the unintentionally delayed payment of the 7.5 year maintenance fee for the above-identified patent.

The petition is **GRANTED**.

The maintenance fee is accepted, and the above-identified patent reinstated as of January 25,2011 . This decision also constitutes notice that the fee has been accepted. An electronic copy of the petition and this decision has been created as an entry in the Image File Wrapper. Nevertheless, petitioner should print and retain an independent copy.

Telephone inquiries related to this electronic decision should be directed to the Electronic Business Center at 1-866-217-9197.

PTO/SB/66 (03-09)
Approved for use through 03/31/2012. OMB 0651-0016
U.S. Patent and Trademark Office: U.S. DEPARTMENT OF COMMERCE
Under the Paperwork Reduction Act of 1995, no persons are required to respond to a collection of information unless it displays valid OMB control number.

PETITION TO ACCEPT UNINTENTIONALLY DELAYED PAYMENT OF MAINTENANCE FEE IN AN EXPIRED PATENT (37 CFR 1.378(c))

Patent Number	Issue Date (YYYY-MM-DD)	Application Number	Filing Date (YYYY-MM-DD)	Docket Number (if applicable)
6440667	2002-08-27	09362089	1999-07-28	1004H

CAUTION: Maintenance fee (and surcharge, if any) payment must correctly identify: (1) the patent number and (2) the application number of the actual U.S. application leading to issuance of that patent to ensure the fee(s) is/are associated with the correct patent. 37 CFR 1.366(c) and (d).

SMALL ENTITY

☐ Patentee claims, or has previously claimed, small entity status. See 37 CFR 1.27.

LOSS OF ENTITLEMENT TO SMALL ENTITY STATUS

☐ Patentee is no longer entitled to small entity status. See 37 CFR 1.27(g)

NOT Small Entity

	Fee	Code
○	3 ½ year	(1551)
◉	7 ½ year	(1552)
○	11 ½ year	(1553)

Small Entity

	Fee	Code
○	3 ½ year	(2551)
○	7 ½ year	(2552)
○	11 ½ year	(2553)

SURCHARGE

The surcharge required by 37 CFR 1.20(i)(2) (Fee Code 1558) must be paid as a condition of accepting unintentionally delayed payment of the maintenance fee.

MAINTENANCE FEE (37 CFR 1.20(e)-(g))

The appropriate maintenance fee must be submitted with this petition.

STATEMENT

THE UNDERSIGNED CERTIFIES THAT THE DELAY IN PAYMENT OF THE MAINTENANCE FEE TO THIS PATENT WAS UNINTENTIONAL

PETITIONER(S) REQUEST THAT THE DELAYED PAYMENT OF THE MAINTENANCE FEE BE ACCEPTED AND THE PATENT REINSTATED

THIS PORTION MUST BE COMPLETED BY THE SIGNATORY OR SIGNATORIES

37 CFR 1.378(d) states: "Any petition under this section must be signed by an attorney or agent registered to practice before the Patent and Trademark Office, or by the patentee, the assignee, or other party in interest."

I certify, in accordance with 37 CFR 1.4(d)(4) that I am

◉ An attorney or agent registered to practice before the Patent and Trademark Office

○ A sole patentee

○ A joint patentee; I certify that I am authorized to sign this submission on behalf of all the other patentees.

○ A joint patentee; all of whom are signing this e-petition

○ The assignee of record of the entire interest

PTO/SB/66 (03-09)
Approved for use through 03/31/2012. OMB 0651-0016
U.S. Patent and Trademark Office: U.S. DEPARTMENT OF COMMERCE
Under the Paperwork Reduction Act of 1995, no persons are required to respond to a collection of information unless it displays valid OMB control number.

Patent Practitioner			
A signature of the applicant or representative is required in accordance with 37 CFR 1.33 and 10.18. Please see 37 CFR 1.4(d) for the form of the signature			
Signature	/Leticia R. Block/	Date (YYYY-MM-DD)	2011-01-25
Name	Leticia R. Block	Registration Number	50167

This collection of information is required by 37 CFR 1.378(c). The information is required to obtain or retain a benefit by the public which is to file (and by the USPTO to process) an application. Confidentiality is governed by 35 U.S.C. 122 and 37 CFR 1.11 and 1.14. This collection is estimated to take 1 hour to complete, including gathering, preparing, and submitting the completed application form to the USPTO. Time will vary depending upon the individual case. Any comments on the amount of time you require to complete this form and/ or suggestions for reducing this burden, should be sent to the Chief Information Officer, U.S. Patent and Trademark Office, U.S. Department of Commerce, P.O. Box 1450, Alexandria, VA 22313-1450. DO NOT SEND FEES OR COMPLETED FORMS TO THIS ADDRESS. **This form can only be used when in conjunction with EFS-Web. If this form is mailed to the USPTO, it may cause delays in reinstating the patent.**

Privacy Act Statement

The Privacy Act of 1974 (P.L. 93-579) requires that you be given certain information in connection with your submission of the attached form related to a patent application or patent. Accordingly, pursuant to the requirements of the Act, please be advised that: (1) the general authority for the collection of this information is 35 U.S.C. 2(b)(2); (2) furnishing of the information solicited is voluntary; and (3) the principal purpose for which the information is used by the U.S. Patent and Trademark Office is to process and/or examine your submission related to a patent application or patent. If you do not furnish the requested information, the U.S. Patent and Trademark Office may not be able to process and/or examine your submission, which may result in termination of proceedings or abandonment of the application or expiration of the patent.

The information provided by you in this form will be subject to the following routine uses:

1. The information on this form will be treated confidentially to the extent allowed under the Freedom of Information Act (5 U.S.C. 552) and the Privacy Act (5 U.S.C. 552a). Records from this system of records may be disclosed to the Department of Justice to determine whether the Freedom of Information Act requires disclosure of these records.

2. A record from this system of records may be disclosed, as a routine use, in the course of presenting evidence to a court, magistrate, or administrative tribunal, including disclosures to opposing counsel in the course of settlement negotiations.

3. A record in this system of records may be disclosed, as a routine use, to a Member of Congress submitting a request involving an individual, to whom the record pertains, when the individual has requested assistance from the Member with respect to the subject matter of the record.

4. A record in this system of records may be disclosed, as a routine use, to a contractor of the Agency having need for the information in order to perform a contract. Recipients of information shall be required to comply with the requirements of the Privacy Act of 1974, as amended, pursuant to 5 U.S.C. 552a(m).

5. A record related to an International Application filed under the Patent Cooperation Treaty in this system of records may be disclosed, as a routine use, to the International Bureau of the World Intellectual Property Organization, pursuant to the Patent Cooperation Treaty.

6. A record in this system of records may be disclosed, as a routine use, to another federal agency for purposes of National Security review (35 U.S.C. 181) and for review pursuant to the Atomic Energy Act (42 U.S.C. 218(c)).

7. A record from this system of records may be disclosed, as a routine use, to the Administrator, General Services, or his/her designee, during an inspection of records conducted by GSA as part of that agency's responsibility to recommend improvements in records management practices and programs, under authority of 44 U.S.C. 2904 and 2906. Such disclosure shall be made in accordance with the GSA regulations governing inspection of records for this purpose, and any other relevant (i.e., GSA or Commerce) directive. Such disclosure shall not be used to make determinations about individuals.

8. A record from this system of records may be disclosed, as a routine use, to the public after either publication of the application pursuant to 35 U.S.C. 122(b) or issuance of a patent pursuant to 35 U.S.C. 151. Further, a record may be disclosed, subject to the limitations of 37 CFR 1.14, as a routine use, to the public if the record was filed in an application which became abandoned or in which the proceedings were terminated and which application is referenced by either a published application, an application open to public inspections or an issued patent.

9. A record from this system of records may be disclosed, as a routine use, to a Federal, State, or local law enforcement agency, if the USPTO becomes aware of a violation or potential violation of law or regulation.

UNITED STATES PATENT AND TRADEMARK OFFICE

Commissioner for Patents
United States Patent and Trademark Office
P.O. Box 1450
Alexandria, VA 22313-1450
www.uspto.gov

HOGAN LOVELLS US LLP
1999 AVENUE OF THE STARS
SUITE 1400
LOS ANGELES, CA 90067

MAILED

JUL 06 2011

OFFICE OF PETITIONS

In re Patent No. 6,243,513
Issue Date: July 5, 2001
Application No. 09/363,041
Filed: July 29, 1999
Attorney Docket No. 34013-00023

ON PETITION

This is a decision in response to a petition filed June 2, 2011, under 37 CFR 1.378(c), to accept the unintentionally delayed payment of a maintenance fee for the above-identified patent.

The petition is **GRANTED**.

This patent expired on June 6, 2009, for failure to pay the 7 ½ year maintenance fee. Since this petition was submitted within twenty-four months after the six-month grace period provided in 37 CFR 1.362(e), the petition was timely filed under the provisions of 37 CFR 1.378(c).

It is not apparent whether the person signing the statement of unintentional delay was in a position to have firsthand or direct knowledge of the facts and circumstances of the delay at issue. Nevertheless, such statement is being treated as having been made as the result of a reasonable inquiry into the facts and circumstances of such delay. In the event that such an inquiry has not been made, petitioner must make such an inquiry. If such inquiry results in the discovery that the delay in paying the maintenance fee under 37 CFR 1.378(c) was intentional, petitioner must notify the Office.

There is no indication that the person signing the petition was ever given a power of attorney to prosecute the application. If the person signing the petition desires to receive future correspondence regarding this application, the appropriate power of attorney document must be submitted. While a courtesy copy of this decision is being mailed to the person signing the petition, all future correspondence will be directed to the address currently of record until appropriate instructions are received.

The maintenance fee is hereby accepted and the above-identified patent is reinstated as of the mail date of this decision.

Telephone inquiries concerning this decision should be directed to the undersigned at (571) 272-6059.

A. Kelley-Collier

Alicia Kelley-Collier
Petitions Examiner
Office of Petitions

cc: KEVIN SHAW
555 THIRTEENTH ST. NW
WASHINGTON, DC 20004

UNITED STATES PATENT AND TRADEMARK OFFICE

Commissioner for Patents
United States Patent and Trademark Office
P.O. Box 1450
Alexandria, VA 22313-1450
www.uspto.gov

Hogan Lovells US LLP
1999 AVENUE OF THE STARS
SUITE 1400
LOS ANGELES CA 90067

MAILED

JUN 07 2011

OFFICE OF PETITIONS

In re Patent No. 6,236,780 :
Issue Date: May 22, 2001 :
Application No. 09/363,042 : ON PETITION
Filed: July 29, 1999 :
Attorney Docket No. **34013-00024** :

This is a decision on the petition under 37 CFR 1.378(c), filed May 10, 2011, to accept the unintentionally delayed payment of a maintenance fee for the above-identified patent.

This patent expired at midnight May 22, 2011, for failure to pay the 7½ year maintenance fee. Since this petition was submitted within twenty-four months after the six-month grace period provided in 37 CFR 1.362(e), the petition was timely filed under the provisions of 37 CFR 1.378(c).

The petition is hereby **GRANTED**.

The maintenance fee is hereby accepted and the above-identified patent is reinstated as of the mail date of this decision.

A petition to accept the unintentionally delayed payment of a maintenance fee under 37 CFR 1.378(c) must be accompanied by (1) a statement that the delay was unintentional, (2) payment of the appropriate maintenance fee, unless previously submitted, and (3) payment of the surcharge set forth in 37 CFR

The address given on the petition differs from the address of record. A courtesy copy of this decision is being mailed to the address noted on the petition. However, until otherwise instructed, all future correspondence regarding this application will be mailed solely to the address of record.

Petitioner will not receive future correspondence related to maintenance fees for the patent unless a "Fee Address" Indication Form (see PTO/SB/47) and Request for Customer Number (see PTO/SB/125) are submitted.

Telephone inquiries concerning this decision should be directed to JoAnne Burke at (571) 272-4584.

JoAnne Burke
Petitions Examiner
Office of Petitions

cc: Celine Jimenez Crowson
555 Thirteenth Street, N.W.
Washington, DC 20004

UNITED STATES PATENT AND TRADEMARK OFFICE

Commissioner for Patents
United States Patent and Trademark Office
P.O. Box 1450
Alexandria, VA 22313-1450
www.uspto.gov

In re Patent No. 6272569
Issue Date: August 7,2001
Application No. 09363085
Filed: July 28,1999
Attorney Docket No. 0538-PSD-D1

:
:DECISION GRANTING PETITION
:UNDER 37 CFR 1.378(c)
:

This is a decision on the electronic petition, filed October 4,2010 ,under 37 CFR 1.378(c) to accept the unintentionally delayed payment of the 7.5 year maintenance fee for the above-identified patent.

The petition is **GRANTED**.

The maintenance fee is accepted, and the above-identified patent reinstated as of October 4,2010 .
This decision also constitutes notice that the fee has been accepted. An electronic copy of the petition and this decision has been created as an entry in the Image File Wrapper. Nevertheless, petitioner should print and retain an independent copy.

Telephone inquiries related to this electronic decision should be directed to the Electronic Business Center at 1-866-217-9197.

PTO/SB/66 (03-09)
Approved for use through 03/31/2012. OMB 0651-0016
U.S. Patent and Trademark Office: U.S. DEPARTMENT OF COMMERCE
Under the Paperwork Reduction Act of 1995, no persons are required to respond to a collection of information unless it displays valid OMB control number.

PETITION TO ACCEPT UNINTENTIONALLY DELAYED PAYMENT OF MAINTENANCE FEE IN AN EXPIRED PATENT (37 CFR 1.378(c))

Patent Number	Issue Date (YYYY-MM-DD)	Application Number	Filing Date (YYYY-MM-DD)	Docket Number (if applicable)
6272569	2001-08-07	09363085	1999-07-28	0538-PSD-D1

CAUTION: Maintenance fee (and surcharge, if any) payment must correctly identify: (1) the patent number and (2) the application number of the actual U.S. application leading to issuance of that patent to ensure the fee(s) is/are associated with the correct patent. 37 CFR 1.366(c) and (d).

SMALL ENTITY

☐ Patentee claims, or has previously claimed, small entity status. See 37 CFR 1.27.

LOSS OF ENTITLEMENT TO SMALL ENTITY STATUS

☐ Patentee is no longer entitled to small entity status. See 37 CFR 1.27(g)

NOT Small Entity			Small Entity		
	Fee	Code		Fee	Code
○	3 ½ year	(1551)	○	3 ½ year	(2551)
◉	7 ½ year	(1552)	○	7 ½ year	(2552)
○	11 ½ year	(1553)	○	11 ½ year	(2553)

SURCHARGE

The surcharge required by 37 CFR 1.20(i)(2) (Fee Code 1558) must be paid as a condition of accepting unintentionally delayed payment of the maintenance fee.

MAINTENANCE FEE (37 CFR 1.20(e)-(g))

The appropriate maintenance fee must be submitted with this petition.

STATEMENT

THE UNDERSIGNED CERTIFIES THAT THE DELAY IN PAYMENT OF THE MAINTENANCE FEE TO THIS PATENT WAS UNINTENTIONAL

PETITIONER(S) REQUEST THAT THE DELAYED PAYMENT OF THE MAINTENANCE FEE BE ACCEPTED AND THE PATENT REINSTATED

THIS PORTION MUST BE COMPLETED BY THE SIGNATORY OR SIGNATORIES

37 CFR 1.378(d) states: "Any petition under this section must be signed by an attorney or agent registered to practice before the Patent and Trademark Office, or by the patentee, the assignee, or other party in interest."

I certify, in accordance with 37 CFR 1.4(d)(4) that I am

◉ An attorney or agent registered to practice before the Patent and Trademark Office

○ A sole patentee

○ A joint patentee; I certify that I am authorized to sign this submission on behalf of all the other patentees.

○ A joint patentee; all of whom are signing this e-petition

○ The assignee of record of the entire interest

PTO/SB/66 (03-09)
Approved for use through 03/31/2012. OMB 0651-0016
U.S. Patent and Trademark Office: U.S. DEPARTMENT OF COMMERCE
Under the Paperwork Reduction Act of 1995, no persons are required to respond to a collection of information unless it displays valid OMB control number.

Patent Practitioner			
A signature of the applicant or representative is required in accordance with 37 CFR 1.33 and 10.18. Please see 37 CFR 1.4(d) for the form of the signature			
Signature	/Kendal M. Sheets/	Date (YYYY-MM-DD)	2010-10-01
Name	Kendal M. Sheets	Registration Number	47077

This collection of information is required by 37 CFR 1.378(c). The information is required to obtain or retain a benefit by the public which is to file (and by the USPTO to process) an application. Confidentiality is governed by 35 U.S.C. 122 and 37 CFR 1.11 and 1.14. This collection is estimated to take 1 hour to complete, including gathering, preparing, and submitting the completed application form to the USPTO. Time will vary depending upon the individual case. Any comments on the amount of time you require to complete this form and/ or suggestions for reducing this burden, should be sent to the Chief Information Officer, U.S. Patent and Trademark Office, U.S. Department of Commerce, P.O. Box 1450, Alexandria, VA 22313-1450. DO NOT SEND FEES OR COMPLETED FORMS TO THIS ADDRESS. **This form can only be used when in conjunction with EFS-Web. If this form is mailed to the USPTO, it may cause delays in reinstating the patent.**

Privacy Act Statement

The Privacy Act of 1974 (P.L. 93-579) requires that you be given certain information in connection with your submission of the attached form related to a patent application or patent. Accordingly, pursuant to the requirements of the Act, please be advised that: (1) the general authority for the collection of this information is 35 U.S.C. 2(b)(2); (2) furnishing of the information solicited is voluntary; and (3) the principal purpose for which the information is used by the U.S. Patent and Trademark Office is to process and/or examine your submission related to a patent application or patent. If you do not furnish the requested information, the U.S. Patent and Trademark Office may not be able to process and/or examine your submission, which may result in termination of proceedings or abandonment of the application or expiration of the patent.

The information provided by you in this form will be subject to the following routine uses:

1. The information on this form will be treated confidentially to the extent allowed under the Freedom of Information Act (5 U.S.C. 552) and the Privacy Act (5 U.S.C. 552a). Records from this system of records may be disclosed to the Department of Justice to determine whether the Freedom of Information Act requires disclosure of these records.

2. A record from this system of records may be disclosed, as a routine use, in the course of presenting evidence to a court, magistrate, or administrative tribunal, including disclosures to opposing counsel in the course of settlement negotiations.

3. A record in this system of records may be disclosed, as a routine use, to a Member of Congress submitting a request involving an individual, to whom the record pertains, when the individual has requested assistance from the Member with respect to the subject matter of the record.

4. A record in this system of records may be disclosed, as a routine use, to a contractor of the Agency having need for the information in order to perform a contract. Recipients of information shall be required to comply with the requirements of the Privacy Act of 1974, as amended, pursuant to 5 U.S.C. 552a(m).

5. A record related to an International Application filed under the Patent Cooperation Treaty in this system of records may be disclosed, as a routine use, to the International Bureau of the World Intellectual Property Organization, pursuant to the Patent Cooperation Treaty.

6. A record in this system of records may be disclosed, as a routine use, to another federal agency for purposes of National Security review (35 U.S.C. 181) and for review pursuant to the Atomic Energy Act (42 U.S.C. 218(c)).

7. A record from this system of records may be disclosed, as a routine use, to the Administrator, General Services, or his/her designee, during an inspection of records conducted by GSA as part of that agency's responsibility to recommend improvements in records management practices and programs, under authority of 44 U.S.C. 2904 and 2906. Such disclosure shall be made in accordance with the GSA regulations governing inspection of records for this purpose, and any other relevant (i.e., GSA or Commerce) directive. Such disclosure shall not be used to make determinations about individuals.

8. A record from this system of records may be disclosed, as a routine use, to the public after either publication of the application pursuant to 35 U.S.C. 122(b) or issuance of a patent pursuant to 35 U.S.C. 151. Further, a record may be disclosed, subject to the limitations of 37 CFR 1.14, as a routine use, to the public if the record was filed in an application which became abandoned or in which the proceedings were terminated and which application is referenced by either a published application, an application open to public inspections or an issued patent.

9. A record from this system of records may be disclosed, as a routine use, to a Federal, State, or local law enforcement agency, if the USPTO becomes aware of a violation or potential violation of law or regulation.

UNITED STATES PATENT AND TRADEMARK OFFICE

Commissioner for Patents
United States Patent and Trademark Office
P.O. Box 1450
Alexandria, VA 22313-1450
www.uspto.gov

In re Patent No. 6480668
Issue Date: November 12,2002
Application No. 09364068
Filed: July 30,1999
Attorney Docket No. 0102/0062

:
:DECISION GRANTING PETITION
:UNDER 37 CFR 1.378(c)
:

This is a decision on the electronic petition, filed March 22,2012 ,under 37 CFR 1.378(c) to accept the unintentionally delayed payment of the 7.5 year maintenance fee for the above-identified patent.

The petition is **GRANTED**.

The maintenance fee is accepted, and the above-identified patent reinstated as of March 22,2012 .
This decision also constitutes notice that the fee has been accepted. An electronic copy of the petition and this decision has been created as an entry in the Image File Wrapper. Nevertheless, petitioner should print and retain an independent copy.

Telephone inquiries related to this electronic decision should be directed to the Electronic Business Center at 1-866-217-9197.

PTO/SB/66 (03-09)
Approved for use through 03/31/2012. OMB 0651-0016
U.S. Patent and Trademark Office: U.S. DEPARTMENT OF COMMERCE
Under the Paperwork Reduction Act of 1995, no persons are required to respond to a collection of information unless it displays valid OMB control number.

PETITION TO ACCEPT UNINTENTIONALLY DELAYED PAYMENT OF MAINTENANCE FEE IN AN EXPIRED PATENT (37 CFR 1.378(c))

Patent Number	Issue Date (YYYY-MM-DD)	Application Number	Filing Date (YYYY-MM-DD)	Docket Number (if applicable)
6480668	2002-11-12	09364068	1999-07-30	

CAUTION: Maintenance fee (and surcharge, if any) payment must correctly identify: (1) the patent number and (2) the application number of the actual U.S. application leading to issuance of that patent to ensure the fee(s) is/are associated with the correct patent. 37 CFR 1.366(c) and (d).

SMALL ENTITY

☐ Patentee claims, or has previously claimed, small entity status. See 37 CFR 1.27.

LOSS OF ENTITLEMENT TO SMALL ENTITY STATUS

☐ Patentee is no longer entitled to small entity status. See 37 CFR 1.27(g)

NOT Small Entity			Small Entity		
	Fee	Code		Fee	Code
○	3 ½ year	(1551)	○	3 ½ year	(2551)
◉	7 ½ year	(1552)	○	7 ½ year	(2552)
○	11 ½ year	(1553)	○	11 ½ year	(2553)

SURCHARGE

The surcharge required by 37 CFR 1.20(i)(2) (Fee Code 1558) must be paid as a condition of accepting unintentionally delayed payment of the maintenance fee.

MAINTENANCE FEE (37 CFR 1.20(e)-(g))

The appropriate maintenance fee must be submitted with this petition.

STATEMENT

THE UNDERSIGNED CERTIFIES THAT THE DELAY IN PAYMENT OF THE MAINTENANCE FEE TO THIS PATENT WAS UNINTENTIONAL

PETITIONER(S) REQUEST THAT THE DELAYED PAYMENT OF THE MAINTENANCE FEE BE ACCEPTED AND THE PATENT REINSTATED

THIS PORTION MUST BE COMPLETED BY THE SIGNATORY OR SIGNATORIES

37 CFR 1.378(d) states: "Any petition under this section must be signed by an attorney or agent registered to practice before the Patent and Trademark Office, or by the patentee, the assignee, or other party in interest."

I certify, in accordance with 37 CFR 1.4(d)(4) that I am

◉ An attorney or agent registered to practice before the Patent and Trademark Office

○ A sole patentee

○ A joint patentee; I certify that I am authorized to sign this submission on behalf of all the other patentees.

○ A joint patentee; all of whom are signing this e-petition

○ The assignee of record of the entire interest

PTO/SB/66 (03-09)
Approved for use through 03/31/2012. OMB 0651-0016
U.S. Patent and Trademark Office: U.S. DEPARTMENT OF COMMERCE
Under the Paperwork Reduction Act of 1995, no persons are required to respond to a collection of information unless it displays valid OMB control number.

Patent Practitioner			
A signature of the applicant or representative is required in accordance with 37 CFR 1.33 and 10.18. Please see 37 CFR 1.4(d) for the form of the signature			
Signature	/Marvin Motsenbocker/	Date (YYYY-MM-DD)	2012-03-22
Name	Marvin A. Motsenbocker	Registration Number	36614

This collection of information is required by 37 CFR 1.378(c). The information is required to obtain or retain a benefit by the public which is to file (and by the USPTO to process) an application. Confidentiality is governed by 35 U.S.C. 122 and 37 CFR 1.11 and 1.14. This collection is estimated to take 1 hour to complete, including gathering, preparing, and submitting the completed application form to the USPTO. Time will vary depending upon the individual case. Any comments on the amount of time you require to complete this form and/ or suggestions for reducing this burden, should be sent to the Chief Information Officer, U.S. Patent and Trademark Office, U.S. Department of Commerce, P.O. Box 1450, Alexandria, VA 22313-1450. DO NOT SEND FEES OR COMPLETED FORMS TO THIS ADDRESS. **This form can only be used when in conjunction with EFS-Web. If this form is mailed to the USPTO, it may cause delays in reinstating the patent.**

Privacy Act Statement

The Privacy Act of 1974 (P.L. 93-579) requires that you be given certain information in connection with your submission of the attached form related to a patent application or patent. Accordingly, pursuant to the requirements of the Act, please be advised that: (1) the general authority for the collection of this information is 35 U.S.C. 2(b)(2); (2) furnishing of the information solicited is voluntary; and (3) the principal purpose for which the information is used by the U.S. Patent and Trademark Office is to process and/or examine your submission related to a patent application or patent. If you do not furnish the requested information, the U.S. Patent and Trademark Office may not be able to process and/or examine your submission, which may result in termination of proceedings or abandonment of the application or expiration of the patent.

The information provided by you in this form will be subject to the following routine uses:

1. The information on this form will be treated confidentially to the extent allowed under the Freedom of Information Act (5 U.S.C. 552) and the Privacy Act (5 U.S.C. 552a). Records from this system of records may be disclosed to the Department of Justice to determine whether the Freedom of Information Act requires disclosure of these records.

2. A record from this system of records may be disclosed, as a routine use, in the course of presenting evidence to a court, magistrate, or administrative tribunal, including disclosures to opposing counsel in the course of settlement negotiations.

3. A record in this system of records may be disclosed, as a routine use, to a Member of Congress submitting a request involving an individual, to whom the record pertains, when the individual has requested assistance from the Member with respect to the subject matter of the record.

4. A record in this system of records may be disclosed, as a routine use, to a contractor of the Agency having need for the information in order to perform a contract. Recipients of information shall be required to comply with the requirements of the Privacy Act of 1974, as amended, pursuant to 5 U.S.C. 552a(m).

5. A record related to an International Application filed under the Patent Cooperation Treaty in this system of records may be disclosed, as a routine use, to the International Bureau of the World Intellectual Property Organization, pursuant to the Patent Cooperation Treaty.

6. A record in this system of records may be disclosed, as a routine use, to another federal agency for purposes of National Security review (35 U.S.C. 181) and for review pursuant to the Atomic Energy Act (42 U.S.C. 218(c)).

7. A record from this system of records may be disclosed, as a routine use, to the Administrator, General Services, or his/her designee, during an inspection of records conducted by GSA as part of that agency's responsibility to recommend improvements in records management practices and programs, under authority of 44 U.S.C. 2904 and 2906. Such disclosure shall be made in accordance with the GSA regulations governing inspection of records for this purpose, and any other relevant (i.e., GSA or Commerce) directive. Such disclosure shall not be used to make determinations about individuals.

8. A record from this system of records may be disclosed, as a routine use, to the public after either publication of the application pursuant to 35 U.S.C. 122(b) or issuance of a patent pursuant to 35 U.S.C. 151. Further, a record may be disclosed, subject to the limitations of 37 CFR 1.14, as a routine use, to the public if the record was filed in an application which became abandoned or in which the proceedings were terminated and which application is referenced by either a published application, an application open to public inspections or an issued patent.

9. A record from this system of records may be disclosed, as a routine use, to a Federal, State, or local law enforcement agency, if the USPTO becomes aware of a violation or potential violation of law or regulation.

UNITED STATES PATENT AND TRADEMARK OFFICE

Commissioner for Patents
United States Patent and Trademark Office
P.O. Box 1450
Alexandria, VA 22313-1450
www.uspto.gov

WILMERHALE/DC
1875 PENNSYLVANIA AVE., NW
WASHINGTON DC 20006

MAILED

JAN 30 2012

OFFICE OF PETITIONS

In re Patent No. 6,697,879 :
Issue Date: February 24, 2004 :
Application No. 09/365,830 :
Filed: August 3, 1999 : LETTER
Attorney Docket No. 112966.102 :
:

This letter is the result of a sua sponte review of the June 1, 2009 electronically filed petition under 37 CFR 1.378(c) to accept the delayed payment of a maintenance fee in the above-identified application.

A review of USPTO records reveals that the "Petition To Accept Unintentionally Delayed Payment Of Maintenance Fee In An Expired Patent (37 CFR 1.378(c)" and the accompanying "Electronic Patent Application Fee Transmittal" submission filed June 1, 2009 were erroneously accepted. Petitioner has not submitted a renewed petition under 37 CFR 1.378(c), as required in the petition decision mailed May 5, 2009 along with the required $400.00 reconsideration fee. Therefore, a petition for reconsideration under 37 CFR 1.378(e) along with the required $400.00 reconsideration fee must be filed within **TWO (2) MONTHS** from the mail date of this letter.

If applicant fails to submit the above, the electronically filed, June 1, 2009, petition under 37 CFR 1.378(c) will be **VACATED** and the status will be changed to indicate that the above-identified patent is expired.

The renewed petition cannot be filed using the ePetition format but must instead be filed to the Office of Petitions for consideration.

Any inquiries directly pertaining to this matter may be directed to the undersigned at (571) 272-3208.

/KOC/
Karen Creasy
Petitions Examiner
Office of Petitions

Cc:

J. BRYAN BLUNDELL
912 GRANDIN AVE
ROCKVILLE, MD 20851

UNITED STATES PATENT AND TRADEMARK OFFICE

Commissioner for Patents
United States Patent and Trademark Office
P.O. Box 1450
Alexandria, VA 22313-1450
www.uspto.go

MAILED

APR 10 2012

OFFICE OF PETITIONS

WILMERHALE/DC
1875 PENNSYLVANIA AVE., NW
WASHINGTON DC 20006

In re Patent No. 6,697,879 :
Issue Date: February 24, 2004 :
Application No. 09/365,830 : ON PETITION
Filed: August 3, 1999 :
For: COMPUTER IMPLEMENTED VIRTUAL :
SENSOR OBJECT AND TANGIBLE MEDIUM :
UTILIZING SAME :

This is a decision on the paper filed February 23, 2012, which is being treated as a "PETITION FOR RECONSIDERATION UNDER 37 CFR 1.378(e)," and supplemental to the petition filed June 1, 2009, to accept the unintentionally delayed payment of a maintenance fee for the above-identified patent.

The petition is **GRANTED**.

The maintenance fee is hereby accepted and the above-identified patent is reinstated as of the mail date of this decision.

Telephone inquiries concerning this decision should be directed to the undersigned at (571) 272-3208.

/KOC/
Karen Creasy
Petitions Examiner
Office of Petitions

UNITED STATES PATENT AND TRADEMARK OFFICE

Commissioner for Patents
United States Patent and Trademark Office
P.O. Box 1450
Alexandria, VA 22313-1450
www.uspto.gov

In re Patent No. 6370596
Issue Date: April 9,2002
Application No. 09365886
Filed: August 3,1999
Attorney Docket No. 032001-024

:
:DECISION GRANTING PETITION
:UNDER 37 CFR 1.378(c)
:

This is a decision on the electronic petition, filed October 18,2010 ,under 37 CFR 1.378(c) to accept the unintentionally delayed payment of the 7.5 year maintenance fee for the above-identified patent.

The petition is **GRANTED**.

The maintenance fee is accepted, and the above-identified patent reinstated as of October 18,2010 . This decision also constitutes notice that the fee has been accepted. An electronic copy of the petition and this decision has been created as an entry in the Image File Wrapper. Nevertheless, petitioner should print and retain an independent copy.

Telephone inquiries related to this electronic decision should be directed to the Electronic Business Center at 1-866-217-9197.

PTO/SB/66 (03-09)
Approved for use through 03/31/2012. OMB 0651-0016
U.S. Patent and Trademark Office: U.S. DEPARTMENT OF COMMERCE
Under the Paperwork Reduction Act of 1995, no persons are required to respond to a collection of information unless it displays valid OMB control number.

PETITION TO ACCEPT UNINTENTIONALLY DELAYED PAYMENT OF MAINTENANCE FEE IN AN EXPIRED PATENT (37 CFR 1.378(c))

Patent Number	Issue Date (YYYY-MM-DD)	Application Number	Filing Date (YYYY-MM-DD)	Docket Number (if applicable)
6370596	2002-04-09	09365886	1999-08-03	032001-024

CAUTION: Maintenance fee (and surcharge, if any) payment must correctly identify: (1) the patent number and (2) the application number of the actual U.S. application leading to issuance of that patent to ensure the fee(s) is/are associated with the correct patent. 37 CFR 1.366(c) and (d).

SMALL ENTITY

☐ Patentee claims, or has previously claimed, small entity status. See 37 CFR 1.27.

LOSS OF ENTITLEMENT TO SMALL ENTITY STATUS

☐ Patentee is no longer entitled to small entity status. See 37 CFR 1.27(g)

NOT Small Entity			Small Entity		
	Fee	Code		Fee	Code
○	3 ½ year	(1551)	○	3 ½ year	(2551)
◉	7 ½ year	(1552)	○	7 ½ year	(2552)
○	11 ½ year	(1553)	○	11 ½ year	(2553)

SURCHARGE

The surcharge required by 37 CFR 1.20(i)(2) (Fee Code 1558) must be paid as a condition of accepting unintentionally delayed payment of the maintenance fee.

MAINTENANCE FEE (37 CFR 1.20(e)-(g))

The appropriate maintenance fee must be submitted with this petition.

STATEMENT

THE UNDERSIGNED CERTIFIES THAT THE DELAY IN PAYMENT OF THE MAINTENANCE FEE TO THIS PATENT WAS UNINTENTIONAL

PETITIONER(S) REQUEST THAT THE DELAYED PAYMENT OF THE MAINTENANCE FEE BE ACCEPTED AND THE PATENT REINSTATED

THIS PORTION MUST BE COMPLETED BY THE SIGNATORY OR SIGNATORIES

37 CFR 1.378(d) states: "Any petition under this section must be signed by an attorney or agent registered to practice before the Patent and Trademark Office, or by the patentee, the assignee, or other party in interest."

I certify, in accordance with 37 CFR 1.4(d)(4) that I am

◉ An attorney or agent registered to practice before the Patent and Trademark Office

○ A sole patentee

○ A joint patentee; I certify that I am authorized to sign this submission on behalf of all the other patentees.

○ A joint patentee; all of whom are signing this e-petition

○ The assignee of record of the entire interest

PTO/SB/66 (03-09)
Approved for use through 03/31/2012. OMB 0651-0016
U.S. Patent and Trademark Office: U.S. DEPARTMENT OF COMMERCE
Under the Paperwork Reduction Act of 1995, no persons are required to respond to a collection of information unless it displays valid OMB control number.

Patent Practitioner			
A signature of the applicant or representative is required in accordance with 37 CFR 1.33 and 10.18. Please see 37 CFR 1.4(d) for the form of the signature			
Signature	/Kendal M. Sheets/	Date (YYYY-MM-DD)	2010-10-15
Name	Kendal M. Sheets	Registration Number	47077

This collection of information is required by 37 CFR 1.378(c). The information is required to obtain or retain a benefit by the public which is to file (and by the USPTO to process) an application. Confidentiality is governed by 35 U.S.C. 122 and 37 CFR 1.11 and 1.14. This collection is estimated to take 1 hour to complete, including gathering, preparing, and submitting the completed application form to the USPTO. Time will vary depending upon the individual case. Any comments on the amount of time you require to complete this form and/ or suggestions for reducing this burden, should be sent to the Chief Information Officer, U.S. Patent and Trademark Office, U.S. Department of Commerce, P.O. Box 1450, Alexandria, VA 22313-1450. DO NOT SEND FEES OR COMPLETED FORMS TO THIS ADDRESS. **This form can only be used when in conjunction with EFS-Web. If this form is mailed to the USPTO, it may cause delays in reinstating the patent.**

Privacy Act Statement

The Privacy Act of 1974 (P.L. 93-579) requires that you be given certain information in connection with your submission of the attached form related to a patent application or patent. Accordingly, pursuant to the requirements of the Act, please be advised that: (1) the general authority for the collection of this information is 35 U.S.C. 2(b)(2); (2) furnishing of the information solicited is voluntary; and (3) the principal purpose for which the information is used by the U.S. Patent and Trademark Office is to process and/or examine your submission related to a patent application or patent. If you do not furnish the requested information, the U.S. Patent and Trademark Office may not be able to process and/or examine your submission, which may result in termination of proceedings or abandonment of the application or expiration of the patent.

The information provided by you in this form will be subject to the following routine uses:

1. The information on this form will be treated confidentially to the extent allowed under the Freedom of Information Act (5 U.S.C. 552) and the Privacy Act (5 U.S.C. 552a). Records from this system of records may be disclosed to the Department of Justice to determine whether the Freedom of Information Act requires disclosure of these records.

2. A record from this system of records may be disclosed, as a routine use, in the course of presenting evidence to a court, magistrate, or administrative tribunal, including disclosures to opposing counsel in the course of settlement negotiations.

3. A record in this system of records may be disclosed, as a routine use, to a Member of Congress submitting a request involving an individual, to whom the record pertains, when the individual has requested assistance from the Member with respect to the subject matter of the record.

4. A record in this system of records may be disclosed, as a routine use, to a contractor of the Agency having need for the information in order to perform a contract. Recipients of information shall be required to comply with the requirements of the Privacy Act of 1974, as amended, pursuant to 5 U.S.C. 552a(m).

5. A record related to an International Application filed under the Patent Cooperation Treaty in this system of records may be disclosed, as a routine use, to the International Bureau of the World Intellectual Property Organization, pursuant to the Patent Cooperation Treaty.

6. A record in this system of records may be disclosed, as a routine use, to another federal agency for purposes of National Security review (35 U.S.C. 181) and for review pursuant to the Atomic Energy Act (42 U.S.C. 218(c)).

7. A record from this system of records may be disclosed, as a routine use, to the Administrator, General Services, or his/her designee, during an inspection of records conducted by GSA as part of that agency's responsibility to recommend improvements in records management practices and programs, under authority of 44 U.S.C. 2904 and 2906. Such disclosure shall be made in accordance with the GSA regulations governing inspection of records for this purpose, and any other relevant (i.e., GSA or Commerce) directive. Such disclosure shall not be used to make determinations about individuals.

8. A record from this system of records may be disclosed, as a routine use, to the public after either publication of the application pursuant to 35 U.S.C. 122(b) or issuance of a patent pursuant to 35 U.S.C. 151. Further, a record may be disclosed, subject to the limitations of 37 CFR 1.14, as a routine use, to the public if the record was filed in an application which became abandoned or in which the proceedings were terminated and which application is referenced by either a published application, an application open to public inspections or an issued patent.

9. A record from this system of records may be disclosed, as a routine use, to a Federal, State, or local law enforcement agency, if the USPTO becomes aware of a violation or potential violation of law or regulation.

UNITED STATES PATENT AND TRADEMARK OFFICE

Commissioner for Patents
United States Patent and Trademark Office
P.O. Box 1450
Alexandria, VA 22313-1450
www.uspto.gov

SHERIDAN K. SNEDDEN
PILLSBURY WINTHROP SHAW PITTMAN LLP
P.O. BOX 10500
MCLEAN, VA 22102

MAILED

JAN 03 2012

OFFICE OF PETITIONS

In re Patent No. 6,106,292 :
Issued: August 22, 2000 :
Application No. 09/365,975 : ON PETITION
Filed: August 2, 1999 :
Attorney Docket No: **034920-0000001** :

This is a decision regarding your request for acceptance of a fee deficiency submission and loss of small entity status filed December 15, 2011 under 37 CFR 1.28.

On September 1, 1998, the Court of Appeals for the Federal Circuit held that 37 CFR 1.28(c) is the sole provision governing the time for correction of the erroneous payment of the issue fee as a small entity. See DH Technology v. Synergystex International, Inc.. 154 F.33d 1333, 47 USPQ2d 1865 (Fed. Cir. Sept. 1, 1998).

The Office no longer investigates or rejects original or reissue applications under 37 CFR 1.56. 1098 Off. Gaz. Pat. Office 502 (January 3, 1989). Therefore nothing in this Notice is intended to imply that an investigation was done.

Finally, there is no indication that petitioner herein was ever empowered to handle matters related to this patent. If petitioner desires to receive future correspondence regarding this patent, the appropriate power of attorney documentation must be submitted. If the new power of attorney and/or change of address is signed by an assignee, the assignee must comply with the requirements of 37 CFR 3.73(b). This decision will be mailed to petitioner, however, all future correspondence will be mailed solely to the correspondence address of record. If petitioner desires to receive future correspondence regarding any Maintenance Fee Reminder which **may** be mailed concerning this patent, a Fee Address should be submitted to Maintenance Fee Division.

Your fee deficiency submission under 37 CFR 1.28 is hereby accepted and the petition is **GRANTED**. Status as a small entity has also been removed.

Inquiries related to this communication should be directed to the Office of Petitions Staff at (571) 272-3282.

Patricia Faison-Ball

Patricia Faison-Ball
Senior Petitions Attorney
Office of Petitions

UNITED STATES PATENT AND TRADEMARK OFFICE

Commissioner for Patents
United States Patent and Trademark Office
P.O. Box 1450
Alexandria, VA 22313-1450
www.uspto.gov

DANIEL J O'BYRNE
VIA DEL PARIONE 8
FLORENCE 50123
ITALY

MAILED
JUN 03 2011
OFFICE OF PETITIONS

In re Patent of Mezzalira :
Patent No. 6,199,594 :
Issue Date: March 13, 2001 : Decision on Petition
Application No. 09/367,519 :
Filing Date: August 14, 1999 :
Attorney Docket No. 08MAR111 :

This is a decision on the "Petition to Add Inventor" filed by Attorney Richard Tushin on February 16, 2011, which is being treated as a petition to add an inventor pursuant to 37 C.F.R. § 1.324 and a petition under 37 C.F.R. 1.183 requesting waiver of 37 C.F.R. § 1.324(b)(2).

The petition under 37 C.F.R. § 1.324 is **dismissed**.

The petition under 37 C.F.R. § 1.183 is **dismissed**.

Any request for reconsideration must be submitted within TWO (2) MONTHS from the mail date of this decision. Extensions of time under 37 C.F.R. § 1.136(a) are NOT permitted. The reconsideration request should include a cover letter entitled "Renewed Petition under 37 C.F.R. § 1.324 and 37 C.F.R. § 1.183."

The sole inventor of record is Rinaldo Mezzalira.

Petitioner seeks to add Valentino Vigolo as an inventor.

37 C.F.R. § 1.324 states,

> (a) Whenever through error a person is named in an issued patent as the inventor, or through error an inventor is not named in an issued patent and such error arose without any deceptive intention on his or her part, the Commissioner may, on petition, or on order of a court before which such matter is called in question, issue a certificate naming only the actual inventor or inventors. A petition to correct inventorship of a patent involved in an interference must comply with the requirements of this section and must be accompanied by a motion under § 1.634.

(b) Any petition pursuant to paragraph (a) of this section must be accompanied by:
(1) Where one or more persons are being added, a statement from each person who is being added as an inventor that the inventorship error occurred without any deceptive intention on his or her part;
(2) A statement from the current named inventors who have not submitted a statement under paragraph (b)(1) of this section either agreeing to the change of inventorship or stating that they have no disagreement in regard to the requested change;
(3) A statement from all assignees of the parties submitting a statement under paragraphs (b)(1) and (b)(2) of this section agreeing to the change of inventorship in the patent, which statement must comply with the requirements of § 3.73(b) of this chapter; and
(4) The fee set forth in § 1.20(b).

The petition does not include a statement from Mezzalira agreeing to the change of inventorship or stating he has no disagreement with regard to the requested change of inventorship. Therefore, the requirement set forth in 37 C.F.R. § 1.324(b)(2) has not been satisfied.

Petitioner requests the requirement for a statement from Mezzalira "be waived because he has died." The request for waiver of the requirement for statement from Mezzalira is being treated as a petition under 37 C.F.R. § 1.183 requesting waiver of the requirement under 37 C.F.R. § 1.324(b)(2) for a statement from each inventor, excluding any inventor(s) being added or deleted, which agrees to the change of inventorship or states the inventor has no disagreement with the change of inventorship.

37 C.F.R. § 1.183 only provides the Office with the authority to waive a requirement "which is not a requirement of the statutes." In other words, the Office does not have the authority to waive a statutory requirement.

35 U.S.C. § 256 states, with emphasis added,

> Whenever through error a person is named in an issued patent as the inventor, or through error an inventor is not named in an issued patent and such error arose without any deceptive intention on his part, the Director may, *on application of all the parties and assignees*, with proof of the facts and such other requirements as may be imposed, issue a certificate correcting such error.

M.P.E.P. § 1481.02 addresses the impact 35 U.S.C. § 256 has on the Office's ability to waive requirements set forth in 37 C.F.R. § 1.324. M.P.E.P. § 1481.02 states, with emphasis added,

> The statutory basis for correction of inventorship in a patent under 37 CFR 1.324 is 35 U.S.C. 256. It is important to recognize that 35 U.S.C. 256 is stricter than 35 U.S.C. 116, the statutory basis for corrections of inventorship in applications under 37 CFR 1.48. 35 U.S.C. 256 requires "on application of all the parties and assignees," while 35 U.S.C. 116 does not have the same requirement. Under 35 U.S.C. 116 and 37 CFR 1.48, waiver requests under 37 CFR 1.183 may be submitted (see, e.g., MPEP § 201.03, under the

> heading "Statement of Lack of Deceptive Intention"). This is not possible under 35 U.S.C. 256 and 37 CFR 1.324. In correction of inventorship in a nonprovisional application under 37 CFR 1.48(a), the requirement for a statement by each originally named inventor may be waived pursuant to 37 CFR 1.183; however, *correction of inventorship in a patent under 37 CFR 1.324 requires petition of all the parties*, i.e., originally named inventors and assignees, in accordance with statute (35 U.S.C. 256) and thus the *requirement cannot be waived.*

As recognized in M.P.E.P. § 1481.02, the requirement for a statement from each inventor is a statutory requirement. Therefore, the Office cannot waive the requirement for a statement from Mezzalira and the petition under 37 C.F.R. § 1.183 is dismissed.

A statement from Mezzalira has not been filed and the requirement for a statement from Mezzalira has not been waived. Therefore, the petition under 37 C.F.R. § 1.324 is dismissed.

Petitioner may wish to note a reissue application can be used to correct an inventorship error. As stated in M.P.E.P. § 1481.02,

> If an inventor is not available, or refuses, to submit a statement, the assignee of the patent may wish to consider filing a reissue application to correct inventorship, because the inventor's statement is not required for a non-broadening reissue application to correct inventorship. See MPEP § 1412.04.

The $130 fee for the petition under 37 C.F.R. § 1.324 and the $400 fee for the petition under 37 C.F.R. § 1.183 have been charged to Deposit Account No. 04-2223 pursuant to the general fee authorization set forth in the petition.

The petition is signed by Attorney Richard Tushin. The record fails to indicate Attorney Tushin has been given a power of attorney and the address on the petition is different than the address of record. While a courtesy copy of this decision is being mailed to Attorney Tushin at the address set forth on the petition, all future correspondence will be directed solely to the address of record absent receipt of appropriate instructions to the contrary.

Further correspondence with respect to this matter may be submitted as follows:

By Internet: A request for reconsideration may be filed electronically using EFS Web.[1] Document Code "PET.OP" should be used if the request is filed electronically.

By mail: Mail Stop Petition
Commissioner for Patents
P.O. Box 1450
Alexandria, VA 22313-1450

By facsimile: (571) 273-8300
Attn: Office of Petitions

[1] General Information concerning EFS Web can be found at http://www.uspto.gov/patents/process/file/efs/index.jsp.

By hand: U.S. Patent and Trademark Office
Customer Service Window
Randolph Building
401 Dulany Street
Alexandria, VA 22314

Telephone inquiries regarding this communication should be directed to Petitions Attorney Steven Brantley at (571) 272-3203.

Anthony Knight
Director
Office of Petitions

cc: Richard Tushin
Franklin Square, Third Floor West
1300 I Street NW
Washington, DC 20005-3353

PTO/SB/66 (03-09)
Approved for use through 03/31/2012. OMB 0651-0016
U.S. Patent and Trademark Office: U.S. DEPARTMENT OF COMMERCE
Under the Paperwork Reduction Act of 1995, no persons are required to respond to a collection of information unless it displays valid OMB control number.

PETITION TO ACCEPT UNINTENTIONALLY DELAYED PAYMENT OF MAINTENANCE FEE IN AN EXPIRED PATENT (37 CFR 1.378(c))

Patent Number	Issue Date (YYYY-MM-DD)	Application Number	Filing Date (YYYY-MM-DD)	Docket Number (if applicable)
6348926	2002-02-19	09367633	1999-12-01	JLR

CAUTION: Maintenance fee (and surcharge, if any) payment must correctly identify: (1) the patent number and (2) the application number of the actual U.S. application leading to issuance of that patent to ensure the fee(s) is/are associated with the correct patent. 37 CFR 1.366(c) and (d).

SMALL ENTITY

☐ Patentee claims, or has previously claimed, small entity status. See 37 CFR 1.27.

LOSS OF ENTITLEMENT TO SMALL ENTITY STATUS

☐ Patentee is no longer entitled to small entity status. See 37 CFR 1.27(g)

NOT Small Entity			Small Entity		
	Fee	Code		Fee	Code
○	3 ½ year	(1551)	○	3 ½ year	(2551)
◉	7 ½ year	(1552)	○	7 ½ year	(2552)
○	11 ½ year	(1553)	○	11 ½ year	(2553)

SURCHARGE

The surcharge required by 37 CFR 1.20(i)(2) (Fee Code 1558) must be paid as a condition of accepting unintentionally delayed payment of the maintenance fee.

MAINTENANCE FEE (37 CFR 1.20(e)-(g))

The appropriate maintenance fee must be submitted with this petition.

STATEMENT

THE UNDERSIGNED CERTIFIES THAT THE DELAY IN PAYMENT OF THE MAINTENANCE FEE TO THIS PATENT WAS UNINTENTIONAL

PETITIONER(S) REQUEST THAT THE DELAYED PAYMENT OF THE MAINTENANCE FEE BE ACCEPTED AND THE PATENT REINSTATED

THIS PORTION MUST BE COMPLETED BY THE SIGNATORY OR SIGNATORIES

37 CFR 1.378(d) states: "Any petition under this section must be signed by an attorney or agent registered to practice before the Patent and Trademark Office, or by the patentee, the assignee, or other party in interest."

I certify, in accordance with 37 CFR 1.4(d)(4) that I am

◉ An attorney or agent registered to practice before the Patent and Trademark Office

○ A sole patentee

○ A joint patentee; I certify that I am authorized to sign this submission on behalf of all the other patentees.

○ A joint patentee; all of whom are signing this e-petition

○ The assignee of record of the entire interest

PTO/SB/66 (03-09)
Approved for use through 03/31/2012. OMB 0651-0016
U.S. Patent and Trademark Office: U.S. DEPARTMENT OF COMMERCE
Under the Paperwork Reduction Act of 1995, no persons are required to respond to a collection of information unless it displays valid OMB control number.

Patent Practitioner			
A signature of the applicant or representative is required in accordance with 37 CFR 1.33 and 10.18. Please see 37 CFR 1.4(d) for the form of the signature			
Signature	/DJCushing/	Date (YYYY-MM-DD)	2010-10-21
Name	David J. Cushing	Registration Number	28703

This collection of information is required by 37 CFR 1.378(c). The information is required to obtain or retain a benefit by the public which is to file (and by the USPTO to process) an application. Confidentiality is governed by 35 U.S.C. 122 and 37 CFR 1.11 and 1.14. This collection is estimated to take 1 hour to complete, including gathering, preparing, and submitting the completed application form to the USPTO. Time will vary depending upon the individual case. Any comments on the amount of time you require to complete this form and/ or suggestions for reducing this burden, should be sent to the Chief Information Officer, U.S. Patent and Trademark Office, U.S. Department of Commerce, P.O. Box 1450, Alexandria, VA 22313-1450. DO NOT SEND FEES OR COMPLETED FORMS TO THIS ADDRESS. **This form can only be used when in conjunction with EFS-Web. If this form is mailed to the USPTO, it may cause delays in reinstating the patent.**

Privacy Act Statement

The Privacy Act of 1974 (P.L. 93-579) requires that you be given certain information in connection with your submission of the attached form related to a patent application or patent. Accordingly, pursuant to the requirements of the Act, please be advised that: (1) the general authority for the collection of this information is 35 U.S.C. 2(b)(2); (2) furnishing of the information solicited is voluntary; and (3) the principal purpose for which the information is used by the U.S. Patent and Trademark Office is to process and/or examine your submission related to a patent application or patent. If you do not furnish the requested information, the U.S. Patent and Trademark Office may not be able to process and/or examine your submission, which may result in termination of proceedings or abandonment of the application or expiration of the patent.

The information provided by you in this form will be subject to the following routine uses:

1. The information on this form will be treated confidentially to the extent allowed under the Freedom of Information Act (5 U.S.C. 552) and the Privacy Act (5 U.S.C. 552a). Records from this system of records may be disclosed to the Department of Justice to determine whether the Freedom of Information Act requires disclosure of these records.

2. A record from this system of records may be disclosed, as a routine use, in the course of presenting evidence to a court, magistrate, or administrative tribunal, including disclosures to opposing counsel in the course of settlement negotiations.

3. A record in this system of records may be disclosed, as a routine use, to a Member of Congress submitting a request involving an individual, to whom the record pertains, when the individual has requested assistance from the Member with respect to the subject matter of the record.

4. A record in this system of records may be disclosed, as a routine use, to a contractor of the Agency having need for the information in order to perform a contract. Recipients of information shall be required to comply with the requirements of the Privacy Act of 1974, as amended, pursuant to 5 U.S.C. 552a(m).

5. A record related to an International Application filed under the Patent Cooperation Treaty in this system of records may be disclosed, as a routine use, to the International Bureau of the World Intellectual Property Organization, pursuant to the Patent Cooperation Treaty.

6. A record in this system of records may be disclosed, as a routine use, to another federal agency for purposes of National Security review (35 U.S.C. 181) and for review pursuant to the Atomic Energy Act (42 U.S.C. 218(c)).

7. A record from this system of records may be disclosed, as a routine use, to the Administrator, General Services, or his/her designee, during an inspection of records conducted by GSA as part of that agency's responsibility to recommend improvements in records management practices and programs, under authority of 44 U.S.C. 2904 and 2906. Such disclosure shall be made in accordance with the GSA regulations governing inspection of records for this purpose, and any other relevant (i.e., GSA or Commerce) directive. Such disclosure shall not be used to make determinations about individuals.

8. A record from this system of records may be disclosed, as a routine use, to the public after either publication of the application pursuant to 35 U.S.C. 122(b) or issuance of a patent pursuant to 35 U.S.C. 151. Further, a record may be disclosed, subject to the limitations of 37 CFR 1.14, as a routine use, to the public if the record was filed in an application which became abandoned or in which the proceedings were terminated and which application is referenced by either a published application, an application open to public inspections or an issued patent.

9. A record from this system of records may be disclosed, as a routine use, to a Federal, State, or local law enforcement agency, if the USPTO becomes aware of a violation or potential violation of law or regulation.

UNITED STATES PATENT AND TRADEMARK OFFICE

Commissioner for Patents
United States Patent and Trademark Office
P.O. Box 1450
Alexandria, VA 22313-1450
www.uspto.gov

In re Patent No. 6348926
Issue Date: February 19,2002
Application No. 09367633
Filed: December 1,1999
Attorney Docket No. JEL30762PC

:
:DECISION GRANTING PETITION
:UNDER 37 CFR 1.378(c)
:

This is a decision on the electronic petition, filed October 21,2010 ,under 37 CFR 1.378(c) to accept the unintentionally delayed payment of the 7.5 year maintenance fee for the above-identified patent.

The petition is **GRANTED**.

The maintenance fee is accepted, and the above-identified patent reinstated as of October 21,2010 . This decision also constitutes notice that the fee has been accepted. An electronic copy of the petition and this decision has been created as an entry in the Image File Wrapper. Nevertheless, petitioner should print and retain an independent copy.

Telephone inquiries related to this electronic decision should be directed to the Electronic Business Center at 1-866-217-9197.

UNITED STATES PATENT AND TRADEMARK OFFICE

Commissioner for Patents
United States Patent and Trademark Office
P.O. Box 1450
Alexandria, VA 22313-1450
www.uspto.gov

In re Patent No. 6505202
Issue Date: January 7,2003
Application No. 09368438
Filed: August 4,1999
Attorney Docket No. MARCHI01.002

:
:DECISION GRANTING PETITION
:UNDER 37 CFR 1.378(c)
:

This is a decision on the electronic petition, filed May 11,2011 ,under 37 CFR 1.378(c) to accept the unintentionally delayed payment of the 7.5 year maintenance fee for the above-identified patent.

The petition is **GRANTED**.

The maintenance fee is accepted, and the above-identified patent reinstated as of May 11,2011 .
This decision also constitutes notice that the fee has been accepted. An electronic copy of the petition and this decision has been created as an entry in the Image File Wrapper. Nevertheless, petitioner should print and retain an independent copy.

Telephone inquiries related to this electronic decision should be directed to the Electronic Business Center at 1-866-217-9197.

PTO/SB/66 (03-09)
Approved for use through 03/31/2012. OMB 0651-0016
U.S. Patent and Trademark Office: U.S. DEPARTMENT OF COMMERCE
Under the Paperwork Reduction Act of 1995, no persons are required to respond to a collection of information unless it displays valid OMB control number.

PETITION TO ACCEPT UNINTENTIONALLY DELAYED PAYMENT OF MAINTENANCE FEE IN AN EXPIRED PATENT (37 CFR 1.378(c))

Patent Number	Issue Date (YYYY-MM-DD)	Application Number	Filing Date (YYYY-MM-DD)	Docket Number (if applicable)
6505202	2003-01-07	09368438	1999-08-04	marchi01.002

CAUTION: Maintenance fee (and surcharge, if any) payment must correctly identify: (1) the patent number and (2) the application number of the actual U.S. application leading to issuance of that patent to ensure the fee(s) is/are associated with the correct patent. 37 CFR 1.366(c) and (d).

SMALL ENTITY

☒ Patentee claims, or has previously claimed, small entity status. See 37 CFR 1.27.

LOSS OF ENTITLEMENT TO SMALL ENTITY STATUS

☐ Patentee is no longer entitled to small entity status. See 37 CFR 1.27(g)

NOT Small Entity			Small Entity		
	Fee	Code		Fee	Code
○	3 ½ year	(1551)	○	3 ½ year	(2551)
○	7 ½ year	(1552)	◉	7 ½ year	(2552)
○	11 ½ year	(1553)	○	11 ½ year	(2553)

SURCHARGE

The surcharge required by 37 CFR 1.20(i)(2) (Fee Code 1558) must be paid as a condition of accepting unintentionally delayed payment of the maintenance fee.

MAINTENANCE FEE (37 CFR 1.20(e)-(g))

The appropriate maintenance fee must be submitted with this petition.

STATEMENT

THE UNDERSIGNED CERTIFIES THAT THE DELAY IN PAYMENT OF THE MAINTENANCE FEE TO THIS PATENT WAS UNINTENTIONAL

PETITIONER(S) REQUEST THAT THE DELAYED PAYMENT OF THE MAINTENANCE FEE BE ACCEPTED AND THE PATENT REINSTATED

THIS PORTION MUST BE COMPLETED BY THE SIGNATORY OR SIGNATORIES

37 CFR 1.378(d) states: "Any petition under this section must be signed by an attorney or agent registered to practice before the Patent and Trademark Office, or by the patentee, the assignee, or other party in interest."

I certify, in accordance with 37 CFR 1.4(d)(4) that I am

◉ An attorney or agent registered to practice before the Patent and Trademark Office

○ A sole patentee

○ A joint patentee; I certify that I am authorized to sign this submission on behalf of all the other patentees.

○ A joint patentee; all of whom are signing this e-petition

○ The assignee of record of the entire interest

PTO/SB/66 (03-09)
Approved for use through 03/31/2012. OMB 0651-0016
U.S. Patent and Trademark Office: U.S. DEPARTMENT OF COMMERCE
Under the Paperwork Reduction Act of 1995, no persons are required to respond to a collection of information unless it displays valid OMB control number.

Patent Practitioner			
A signature of the applicant or representative is required in accordance with 37 CFR 1.33 and 10.18. Please see 37 CFR 1.4(d) for the form of the signature			
Signature	/Gordon E. Nelson/	Date (YYYY-MM-DD)	2011-05-10
Name	Gordon E. Nelson	Registration Number	30093

This collection of information is required by 37 CFR 1.378(c). The information is required to obtain or retain a benefit by the public which is to file (and by the USPTO to process) an application. Confidentiality is governed by 35 U.S.C. 122 and 37 CFR 1.11 and 1.14. This collection is estimated to take 1 hour to complete, including gathering, preparing, and submitting the completed application form to the USPTO. Time will vary depending upon the individual case. Any comments on the amount of time you require to complete this form and/ or suggestions for reducing this burden, should be sent to the Chief Information Officer, U.S. Patent and Trademark Office, U.S. Department of Commerce, P.O. Box 1450, Alexandria, VA 22313-1450. DO NOT SEND FEES OR COMPLETED FORMS TO THIS ADDRESS. **This form can only be used when in conjunction with EFS-Web. If this form is mailed to the USPTO, it may cause delays in reinstating the patent.**

Privacy Act Statement

The Privacy Act of 1974 (P.L. 93-579) requires that you be given certain information in connection with your submission of the attached form related to a patent application or patent. Accordingly, pursuant to the requirements of the Act, please be advised that: (1) the general authority for the collection of this information is 35 U.S.C. 2(b)(2); (2) furnishing of the information solicited is voluntary; and (3) the principal purpose for which the information is used by the U.S. Patent and Trademark Office is to process and/or examine your submission related to a patent application or patent. If you do not furnish the requested information, the U.S. Patent and Trademark Office may not be able to process and/or examine your submission, which may result in termination of proceedings or abandonment of the application or expiration of the patent.

The information provided by you in this form will be subject to the following routine uses:

1. The information on this form will be treated confidentially to the extent allowed under the Freedom of Information Act (5 U.S.C. 552) and the Privacy Act (5 U.S.C. 552a). Records from this system of records may be disclosed to the Department of Justice to determine whether the Freedom of Information Act requires disclosure of these records.

2. A record from this system of records may be disclosed, as a routine use, in the course of presenting evidence to a court, magistrate, or administrative tribunal, including disclosures to opposing counsel in the course of settlement negotiations.

3. A record in this system of records may be disclosed, as a routine use, to a Member of Congress submitting a request involving an individual, to whom the record pertains, when the individual has requested assistance from the Member with respect to the subject matter of the record.

4. A record in this system of records may be disclosed, as a routine use, to a contractor of the Agency having need for the information in order to perform a contract. Recipients of information shall be required to comply with the requirements of the Privacy Act of 1974, as amended, pursuant to 5 U.S.C. 552a(m).

5. A record related to an International Application filed under the Patent Cooperation Treaty in this system of records may be disclosed, as a routine use, to the International Bureau of the World Intellectual Property Organization, pursuant to the Patent Cooperation Treaty.

6. A record in this system of records may be disclosed, as a routine use, to another federal agency for purposes of National Security review (35 U.S.C. 181) and for review pursuant to the Atomic Energy Act (42 U.S.C. 218(c)).

7. A record from this system of records may be disclosed, as a routine use, to the Administrator, General Services, or his/her designee, during an inspection of records conducted by GSA as part of that agency's responsibility to recommend improvements in records management practices and programs, under authority of 44 U.S.C. 2904 and 2906. Such disclosure shall be made in accordance with the GSA regulations governing inspection of records for this purpose, and any other relevant (i.e., GSA or Commerce) directive. Such disclosure shall not be used to make determinations about individuals.

8. A record from this system of records may be disclosed, as a routine use, to the public after either publication of the application pursuant to 35 U.S.C. 122(b) or issuance of a patent pursuant to 35 U.S.C. 151. Further, a record may be disclosed, subject to the limitations of 37 CFR 1.14, as a routine use, to the public if the record was filed in an application which became abandoned or in which the proceedings were terminated and which application is referenced by either a published application, an application open to public inspections or an issued patent.

9. A record from this system of records may be disclosed, as a routine use, to a Federal, State, or local law enforcement agency, if the USPTO becomes aware of a violation or potential violation of law or regulation.

UNITED STATES PATENT AND TRADEMARK OFFICE

Commissioner for Patents
United States Patent and Trademark Office
P.O. Box 1450
Alexandria, VA 22313-1450
www.uspto.gov

ESCO CORPORATION
2141 NW 25TH AVENUE
P.O. BOX 10123
PORTLAND OR 97210

MAILED

FEB 22 2011

OFFICE OF PETITIONS

In re Application of	:	
Larren F. Jones, Robert E.	:	
McClanahan, and Hezekiah R.	:	
Holland	:	
Application No. 09/368,503	:	DECISION ON RENEWED PETITION
Filed: August 5, 1999	:	PURSUANT TO
Attorney Docket No. 51291.81516	:	37 C.F.R. § 1.183
Title: WEAR ASSEMBLY FOR A	:	
DIGGING EDGE OF AN EXCAVATOR	:	

This is in response to the renewed petition pursuant to 37 C.F.R. § 1.183, filed June 23, 2010. A duplicate copy of this submission was received on September 7, 2010. Petitioner seeks the waiver of 37 C.F.R. §§ 1.42 and 1.63(a)(1). [1]

This renewed petition is **GRANTED.**

The present application is for the reissue of U.S. Patent number 5,653,048, which issued on August 5, 1997, from application number 08/554,158.

It is noted that both the written consent to the reissue by the Assignee and a statement under 37 C.F.R. § 3.73(b) were included on filing.

On August 5, 1999, the present reissue application was filed, identifying Larren F. Jones, Robert E. McClanahan, and Hezekiah R. Holland as joint inventors. A fully-executed reissue

1 See MPEP § 603: "[w]hen an inventor who executed the original declaration is refusing or cannot be found to execute a required supplemental declaration, the requirement for that inventor to sign the supplemental declaration may be suspended or waived in accordance with 37 CFR 1.183."

declaration was included on filing. On October 27, 2008, a final Office action was mailed, which included an indication that the reissue declaration is defective and that a supplemental reissue declaration would be required.

A notice of appeal was filed on April 27, 2009, along with a three month extension of time and the associated fee. An original petition pursuant to 37 C.F.R. § 1.183 was filed on July 27, 2009 along with, *inter alia*: a Request for Continued Examination and the associated fee, along with the surcharge associated with the late submission of an oath or declaration, the last known address of one of the legal representatives of deceased non-signing joint inventor Jones, and a supplemental reissue declaration that has been executed by Messrs. McClanahan and Holland, as well as the brother of the deceased joint inventor. The original petition was dismissed via the mailing of a decision on April 23, 2010.

With this renewed petition, Petitioner has submitted, *inter alia*, several statements of fact, a copy of a letter, the last-known address of Jeffrey Jones, and a supplemental reissue declaration that has been executed by Robin Morton, Jennifer Harp, and Randall Jones. The remaining two legal representatives of the deceased inventor, Patrick and Jeffrey Jones, have not executed this supplemental reissue declaration.

The address for Patrick Jones which appears on the second page of this renewed petition will serve as the last known address for this individual.

Petitioner has established that a diligent effort has been made to locate the two non-signing legal representatives of the deceased inventor.

With this renewed petition, Petitioner has asserted the existence of an extraordinary situation where justice requires waiver of the rules.[2]

The renewed petition is granted to the extent that the supplemental reissue declaration of June 23, 2010 may be entered, despite the fact that the requirement that all of the inventors sign the declaration has not been satisfied. **This is not a decision on the merits of the declaration.**

---

2 The $400 petition fee will be charged to Deposit Account No. 19-0733 in due course, as authorized on the first page of this renewed petition.

The Technology Center will be notified of this decision.

Telephone inquiries regarding *this decision* should be directed to Senior Attorney Paul Shanoski at (571) 272-3225.[3] All other inquiries concerning examination procedures or status of the application should be directed to the Technology Center.

/Hiram Bernstein/

Hiram Bernstein
Senior Legal Advisor
Office of Patent Legal Administration

3 Petitioner will note that all practice before the Office should be in writing, and the action of the Office will be based exclusively on the written record in the Office. See 37 C.F.R. § 1.2. As such, Petitioner is reminded that no telephone discussion may be controlling or considered authority for Petitioner's further action(s).

UNITED STATES PATENT AND TRADEMARK OFFICE

Commissioner for Patents
United States Patent and Trademark Office
P.O. Box 1450
Alexandria, VA 22313-1450
www.uspto.gov

MAILED
JUN 20 2011
OFFICE OF PETITIONS

MCCARTER & ENGLISH, LLP NEWARK
FOUR GATEWAY CENTER
100 MULBERRY STREET
NEWARK NJ 07102

In re Patent No. 6,242,025 :
Issue Date: June 05, 2001 :
Application No. 09/369,065 : DECISION ON PETITION
Filed: August 04, 1999 :
Attorney Docket No. 116054-00007 :

This is a decision on the petition under 37 CFR 1.378(c), filed May 19, 2011, to accept the unintentionally delayed payment of a maintenance fee for the above-identified patent.

The petition is **GRANTED**.

This patent expired on June 05, 2009 for failure to pay the seven and one-half year maintenance fee. Since this petition was submitted within twenty-four months after the six-month grace period provided in 37 CFR 1.362(e), the petition was timely filed under the provisions of 37 CFR 1.378(c).

The maintenance fee is hereby accepted and the above-identified patent is reinstated as of the mail date of this decision.

Telephone inquiries concerning this decision should be directed to the Michelle R. Eason at (571) 272-4231.

The patent file is being forwarded to Files Repository.

Michelle R. Eason
Paralegal Specialist
Office of Petitions

UNITED STATES PATENT AND TRADEMARK OFFICE

Commissioner for Patents
United States Patent and Trademark Office
P.O. Box 1450
Alexandria, VA 22313-1450
www.uspto.gov

In re Patent No. 7133834
Issue Date: November 7,2006
Application No. 09369391
Filed: August 6,1999
Attorney Docket No. 2222.2630005

:
:DECISION GRANTING PETITION
:UNDER 37 CFR 1.378(c)
:

This is a decision on the electronic petition, filed February 14,2011 ,under 37 CFR 1.378(c) to accept the unintentionally delayed payment of the 3.5 year maintenance fee for the above-identified patent.

The petition is **GRANTED**.

The maintenance fee is accepted, and the above-identified patent reinstated as of February 14,2011 . This decision also constitutes notice that the fee has been accepted. An electronic copy of the petition and this decision has been created as an entry in the Image File Wrapper. Nevertheless, petitioner should print and retain an independent copy.

Telephone inquiries related to this electronic decision should be directed to the Electronic Business Center at 1-866-217-9197.

PTO/SB/66 (03-09)
Approved for use through 03/31/2012. OMB 0651-0016
U.S. Patent and Trademark Office: U.S. DEPARTMENT OF COMMERCE
Under the Paperwork Reduction Act of 1995, no persons are required to respond to a collection of information unless it displays valid OMB control number.

PETITION TO ACCEPT UNINTENTIONALLY DELAYED PAYMENT OF MAINTENANCE FEE IN AN EXPIRED PATENT (37 CFR 1.378(c))

Patent Number	Issue Date (YYYY-MM-DD)	Application Number	Filing Date (YYYY-MM-DD)	Docket Number (if applicable)
7133834	2006-11-07	09369391	1999-08-06	

CAUTION: Maintenance fee (and surcharge, if any) payment must correctly identify: (1) the patent number and (2) the application number of the actual U.S. application leading to issuance of that patent to ensure the fee(s) is/are associated with the correct patent. 37 CFR 1.366(c) and (d).

SMALL ENTITY

☐ Patentee claims, or has previously claimed, small entity status. See 37 CFR 1.27.

LOSS OF ENTITLEMENT TO SMALL ENTITY STATUS

☐ Patentee is no longer entitled to small entity status. See 37 CFR 1.27(g)

NOT Small Entity			Small Entity		
	Fee	Code		Fee	Code
◉	3 ½ year	(1551)	○	3 ½ year	(2551)
○	7 ½ year	(1552)	○	7 ½ year	(2552)
○	11 ½ year	(1553)	○	11 ½ year	(2553)

SURCHARGE

The surcharge required by 37 CFR 1.20(i)(2) (Fee Code 1558) must be paid as a condition of accepting unintentionally delayed payment of the maintenance fee.

MAINTENANCE FEE (37 CFR 1.20(e)-(g))

The appropriate maintenance fee must be submitted with this petition.

STATEMENT

THE UNDERSIGNED CERTIFIES THAT THE DELAY IN PAYMENT OF THE MAINTENANCE FEE TO THIS PATENT WAS UNINTENTIONAL

PETITIONER(S) REQUEST THAT THE DELAYED PAYMENT OF THE MAINTENANCE FEE BE ACCEPTED AND THE PATENT REINSTATED

THIS PORTION MUST BE COMPLETED BY THE SIGNATORY OR SIGNATORIES

37 CFR 1.378(d) states: "Any petition under this section must be signed by an attorney or agent registered to practice before the Patent and Trademark Office, or by the patentee, the assignee, or other party in interest."

I certify, in accordance with 37 CFR 1.4(d)(4) that I am

◉ An attorney or agent registered to practice before the Patent and Trademark Office

○ A sole patentee

○ A joint patentee; I certify that I am authorized to sign this submission on behalf of all the other patentees.

○ A joint patentee; all of whom are signing this e-petition

○ The assignee of record of the entire interest

PTO/SB/66 (03-09)
Approved for use through 03/31/2012. OMB 0651-0016
U.S. Patent and Trademark Office: U.S. DEPARTMENT OF COMMERCE
Under the Paperwork Reduction Act of 1995, no persons are required to respond to a collection of information unless it displays valid OMB control number.

Patent Practitioner			
A signature of the applicant or representative is required in accordance with 37 CFR 1.33 and 10.18. Please see 37 CFR 1.4(d) for the form of the signature			
Signature	/Lawrence A. Aaronson/	Date (YYYY-MM-DD)	2011-02-14
Name	Lawrence A. Aaronson	Registration Number	38369

This collection of information is required by 37 CFR 1.378(c). The information is required to obtain or retain a benefit by the public which is to file (and by the USPTO to process) an application. Confidentiality is governed by 35 U.S.C. 122 and 37 CFR 1.11 and 1.14. This collection is estimated to take 1 hour to complete, including gathering, preparing, and submitting the completed application form to the USPTO. Time will vary depending upon the individual case. Any comments on the amount of time you require to complete this form and/ or suggestions for reducing this burden, should be sent to the Chief Information Officer, U.S. Patent and Trademark Office, U.S. Department of Commerce, P.O. Box 1450, Alexandria, VA 22313-1450. DO NOT SEND FEES OR COMPLETED FORMS TO THIS ADDRESS. **This form can only be used when in conjunction with EFS-Web. If this form is mailed to the USPTO, it may cause delays in reinstating the patent.**

Privacy Act Statement

The Privacy Act of 1974 (P.L. 93-579) requires that you be given certain information in connection with your submission of the attached form related to a patent application or patent. Accordingly, pursuant to the requirements of the Act, please be advised that: (1) the general authority for the collection of this information is 35 U.S.C. 2(b)(2); (2) furnishing of the information solicited is voluntary; and (3) the principal purpose for which the information is used by the U.S. Patent and Trademark Office is to process and/or examine your submission related to a patent application or patent. If you do not furnish the requested information, the U.S. Patent and Trademark Office may not be able to process and/or examine your submission, which may result in termination of proceedings or abandonment of the application or expiration of the patent.

The information provided by you in this form will be subject to the following routine uses:

1. The information on this form will be treated confidentially to the extent allowed under the Freedom of Information Act (5 U.S.C. 552) and the Privacy Act (5 U.S.C. 552a). Records from this system of records may be disclosed to the Department of Justice to determine whether the Freedom of Information Act requires disclosure of these records.

2. A record from this system of records may be disclosed, as a routine use, in the course of presenting evidence to a court, magistrate, or administrative tribunal, including disclosures to opposing counsel in the course of settlement negotiations.

3. A record in this system of records may be disclosed, as a routine use, to a Member of Congress submitting a request involving an individual, to whom the record pertains, when the individual has requested assistance from the Member with respect to the subject matter of the record.

4. A record in this system of records may be disclosed, as a routine use, to a contractor of the Agency having need for the information in order to perform a contract. Recipients of information shall be required to comply with the requirements of the Privacy Act of 1974, as amended, pursuant to 5 U.S.C. 552a(m).

5. A record related to an International Application filed under the Patent Cooperation Treaty in this system of records may be disclosed, as a routine use, to the International Bureau of the World Intellectual Property Organization, pursuant to the Patent Cooperation Treaty.

6. A record in this system of records may be disclosed, as a routine use, to another federal agency for purposes of National Security review (35 U.S.C. 181) and for review pursuant to the Atomic Energy Act (42 U.S.C. 218(c)).

7. A record from this system of records may be disclosed, as a routine use, to the Administrator, General Services, or his/her designee, during an inspection of records conducted by GSA as part of that agency's responsibility to recommend improvements in records management practices and programs, under authority of 44 U.S.C. 2904 and 2906. Such disclosure shall be made in accordance with the GSA regulations governing inspection of records for this purpose, and any other relevant (i.e., GSA or Commerce) directive. Such disclosure shall not be used to make determinations about individuals.

8. A record from this system of records may be disclosed, as a routine use, to the public after either publication of the application pursuant to 35 U.S.C. 122(b) or issuance of a patent pursuant to 35 U.S.C. 151. Further, a record may be disclosed, subject to the limitations of 37 CFR 1.14, as a routine use, to the public if the record was filed in an application which became abandoned or in which the proceedings were terminated and which application is referenced by either a published application, an application open to public inspections or an issued patent.

9. A record from this system of records may be disclosed, as a routine use, to a Federal, State, or local law enforcement agency, if the USPTO becomes aware of a violation or potential violation of law or regulation.

UNITED STATES PATENT AND TRADEMARK OFFICE

Commissioner for Patents
United States Patent and Trademark Office
P.O. Box 1450
Alexandria, VA 22313-1450
www.uspto.gov

DaVinci Intellectual Property LLC
2851 N. Burling St Unit 1S
Chicago IL 60657

MAILED
MAR 16 2012
OFFICE OF PETITIONS

In re Application of :
Casebolt et al. :
Application No. 09/370,121 :
Patent No. 6,490,153 : DECISION ON PETITION
Filed: August 6, 1999 : PURSUANT TO 37 C.F.R.
Issue Date: December 3, 2002 : § 1.378(B)
Attorney Docket No. M-7792-US :
Title: COMPUTER SYSTEM FOR :
HIGHLY-DENSE MOUNTING OF SYSTEM :
COMPONENTS :

This is a decision on the petition filed on February 16, 2012, pursuant to 37 C.F.R. § 1.378(b) to reinstate the above-identified patent.

This petition pursuant to 37 C.F.R. § 1.378(b) is **DISMISSED**.

Background

The patent issued on December 3, 2002. The grace period for paying the 3½-year maintenance fee provided in 37 C.F.R. § 1.362(e) expired at midnight on December 3, 2006, with no payment received. Accordingly, the patent expired on December 3, 2006 at midnight.

Any petition to accept an unavoidably delayed payment of a maintenance fee filed under 37 C.F.R. § 1.378(b) must include:

(1) the required maintenance fee set forth in 37 C.F.R. § 1.20 (e) through (g);

(2) the surcharge set forth in 37 C.F.R. § 1.20(i)(1), and;

(3) a showing that the delay was unavoidable since reasonable care was taken to ensure that the maintenance fee would be

> paid timely and that the petition was filed promptly after the patentee was notified of, or otherwise became aware of, the expiration of the patent - the showing must enumerate the steps taken to ensure timely payment of the maintenance fee, the date and the manner in which patentee became aware of the expiration of the patent, and the steps taken to file the petition promptly.

The surcharge associated with a petition to accept the late payment of a maintenance fee as unavoidable was submitted on February 16, 2012, along with a statement of facts. Petitioner has further included a portion of the required maintenance fees.

The second requirement of Rule 1.378(b) has been satisfied. The first and third requirement of Rule 1.378(b) have not been satisfied, as will be discussed below.

The standard

35 U.S.C. § 41(c)(1) states, *in pertinent part*:

> The Director may accept the payment of any maintenance fee… after the six-month grace period if the delay[1] is shown to the satisfaction of the Director to have been unavoidable.

37 C.F.R. § 1.378(b)(3) is at issue in this case. Acceptance of a late maintenance fee under the unavoidable delay standard is considered under the same standard for reviving an abandoned application under 37 C.F.R. § 1.137(a). This is a very stringent standard. Decisions on reviving abandoned applications on the basis of "unavoidable" delay have adopted the reasonably prudent person standard in determining if the delay was unavoidable:

> The word 'unavoidable' ... is applicable to ordinary human affairs, and requires no more or greater care or diligence than is generally used and observed by prudent and careful men in relation to their most important business.[2]

In addition, decisions are made on a "case-by-case basis, taking all the facts and circumstances into account." Nonetheless, a

---

1 This delay includes the entire period between the due date for the fee and the filing of a grantable petition pursuant to 37 C.F.R. § 1.378(b).

2 In re Mattullath, 38 App. D.C. 497, 514-15 (1912)(*quoting* Ex parte Pratt, 1887 Dec. Comm'r Pat. 31, 32-33 (1887)); see also Winkler v. Ladd, 221 F. Supp. 550, 552, 138 U.S.P.Q. 666, 167-68 (D.D.C. 1963), aff'd, 143 U.S.P.Q. 172 (D.C. Cir. 1963); Ex parte Henrich, 1913 Dec. Comm'r Pat. 139, 141 (1913).

petition cannot be granted where a petitioner has failed to meet his or her burden of establishing that the delay was "unavoidable."[3]

The burden of showing the cause of the delay is on the person seeking to revive the application.[4]

Application of the standard to the current facts and circumstances

Regarding the first requirement of 37 C.F.R. § 1.378(b), the other-than small entity fees that are currently associated with the 3½ and the 7½-year maintenance fees are $1,130 and $2,850, respectively. Petitioner appears to be under the mistaken impression these fees are $980 and $2480, respectively.[5] Consequently, these fees were submitted instead of the proper amount. It follows these fees have not been submitted in full, and an additional $520 is required to make up the deficiency.

Regarding the third requirement of 37 C.F.R. § 1.378(b), Petitioner has explained that on or about August 1, 2011, he learned this patent has expired for failure to submit the 3-½ year maintenance fee,[6] and has alleged the Assignee

> engaged the law firm of Skjerven Morill MacPherson LLP to pay the first maintenance fee on April 5, 2007. Further, Applicant engaged the law firm of Skjerven Morrill MacPherson LLP to pay the maintenance fees.
>
> Arun statement of facts, paragraph 2.

Petitioner explains that on an unspecified date, he "realized that the law firm of Skjerven Morill MacPherson LLP had gone out of business and was defunct."[7]

The period for paying the 3½-year maintenance fee without the surcharge extended from December 3, 2005 to June 3, 2006 and for paying with the surcharge from June 4, 2006 to December 3, 2006. Thus, the delay in paying the 3½-year maintenance fee extended from December 3, 2006 at midnight to the filing of this petition on February 16, 2012.

---

3 Haines v. Quigg, 673 F. Supp. at 316-17, 5 U.S.P.Q.2d at 1131-32.
4 Id.
5 Petition, page 2.
6 Arun statement of facts, paragraph 3.
7 Id. at 5.

Patentee has provided an indication of the date on which he became aware of the expiration of the patent.

The record does not contain a showing that the delay was unavoidable, as will now be pointed out.

First, the record does not contain an enumeration of the steps taken to ensure timely payment of the maintenance fee. An adequate showing that the delay in payment of the maintenance fees at issue was "unavoidable" within the meaning of 35 U.S.C. 41(c) and 37 CFR 1.378(b)(3) requires a showing of the steps taken to ensure the timely payment of the maintenance fees for this patent. Where the record fails to disclose that the patentee took reasonable steps to ensure timely payment of the maintenance fees, 35 U.S.C. § 41(c) and 37 C.F.R. § 1.378(b)(3) preclude acceptance of the delayed payment of the maintenance fee under 37 CFR § 1.378(b).

Petitioner has indicated "Assignee engaged the law firm of Skjerven Morill MacPherson LLP to pay the first maintenance fee on April 5, 2007." However, as set forth above, the patent expired on December 3, 2006 at midnight. As such, the Assignee engaged a law firm to pay the first maintenance fee *more than four months after the patent had expired for failure to timely submit the same.* It follows the record does not support a finding that any steps were in place to ensure the timely payment of the first maintenance fee.

Moreover, Petitioner will note that a patent holder's reliance upon an attorney does not provide him with an absolute defense, but rather shifts the focus to whether the attorney acted reasonably and prudently.[8] It is well established that a patent holder is bound by any errors that may have been committed by his attorney.[9] Petitioner will need to establish that any alleged failure of the law firm of Skjerven Morill MacPherson LLP could not have been avoided with the exercise of due care. Whether an action by an attorney constituted a breach of the fiduciary duty of care is of no moment to the issue of whether the entire delay was unavoidable.[10]

---

8 California Medical Products v. Technol Med. Prod., 921 F. Supp. 1219, 1259 (D. Del. 1995).

9 Smith v. Diamond, 209 U.S.P.Q. 1091, 1093 (D.D.C. 1981)(citing Link v. Wabash Railroad Co., 370 U.S. 626, 8 L. Ed. 2d 734 (1962).

10 See Haines v. Quigg, 5 USPQ2d 1130 (N.D. Ind. 1987)(the court, in affirming an Office decision denying revival of an application on the basis of unavoidable delay, stated: "If the attorney somehow breached his duty of

Second, the record does not contain a description of the manner in which patentee became aware of the expiration of the patent.

Third, the record does not contain a description of the steps taken to file the petition promptly. Petitioner has indicated he learned of the expiration of this patent on August 1, 2011. Why was this petition not filed until more than six months had passed?

Conclusion

Any request for reconsideration of this decision must be filed within **TWO MONTHS** of the mailing date of this decision. Any such petition for reconsideration must be accompanied by the $400 petition fee set forth in 37 C.F.R. § 1.17(h). After decision on the petition for reconsideration, no further reconsideration or review of the matter will be undertaken by the Commissioner. Accordingly, on request for reconsideration, it is extremely important that Petitioner supply any and all relevant information and documentation in order to meet his burden of showing unavoidable delay. This includes statements by all persons with direct knowledge of the cause of the delay, setting forth the facts as they know them. Petitioner must provide documentation and address the deficiencies noted above. If on request for reconsideration, the delayed payment of the maintenance fees is not accepted, then the maintenance fees are subject to refund following the decision on the petition for reconsideration, or after the expiration of the time for filing such a petition for reconsideration, if none is filed.

The reply should include a cover letter entitled "Renewed Petition pursuant to 37 C.F.R. § 1.378(e)". This is not a final agency action within the meaning of 5 U.S.C § 704.

Any response to this decision should indicate in a prominent manner that the attorney handling this matter is Paul Shanoski, and may be submitted by mail,[11] hand-delivery,[12] or facsimile.[13]

---

care to plaintiff, then plaintiff may have certain other remedies available to him against his attorney. He cannot, however, ask the court to overlook [attorney's] action or inaction with regard to the patent application.")

11 Mail Stop Petition, Commissioner for Patents, United States Patent and Trademark Office, P.O. Box 1450, Alexandria, VA, 22313-1450.

12 Customer Window, Randolph Building, 401 Dulaney Street, Alexandria, VA, 22314.

13 (571) 273-8300: please note this is a central facsimile number.

Registered users of EFS-Web may alternatively submit a response to this decision via EFS-Web.[14]

The general phone number for the Office of Petitions which should be used for status requests is (571) 272-3282. Telephone inquiries regarding this decision should be directed to the undersigned at (571) 272-3225. Inquiries pertaining to the submission of maintenance fees should be directed to the Maintenance Fee branch at 571-272-6500.

Paul Shanoski
Senior Attorney
Office of Petitions

14 https://sportal.uspto.gov/authenticate/authenticateuserlocalepf.html

UNITED STATES PATENT AND TRADEMARK OFFICE

Commissioner for Patents
United States Patent and Trademark Office
P.O. Box 1450

MAILED

OCT 24 2011

OFFICE OF PETITIONS

GENERAL ELECTRIC COMPANY
CRD PATENT DOCKET RM 4A59
BLDG K 1 SALAMONE
PO BOX 8
SCHENECTADY NY 12301

In re Patent No. 6,357,278 :
Issue Date: March 19, 2002 : ON PETITION
Application No. 09/370,135 :
Filed: August 9, 1999 :

This is a decision on the petition under 37 CFR 1.378(c), filed September 26, 2011, to accept the unintentionally delayed payment of a maintenance fee for the above-identified application.

The petition is **GRANTED.**

The patent expired on March 20, 2010 for failure to pay the seven and one-half year maintenance fee. Since this petition was submitted within twenty-four months after the six-month grace period provided in 37 CFR 1.362(e), the petition was timely filed under the provisions of 37 CFR 1.378(c).

The maintenance fee is hereby accepted and the above-identified patent is reinstated as of the mailing date of this decision.

It is not apparent whether the person signing the statement of unintentional delay was in a position to have firsthand or direct knowledge of the facts and circumstances of the delay at issue. Nevertheless, such statement is being treated as having been made as the result of a reasonable inquiry into the facts and circumstances of such delay. In the event that such an inquiry has not been made, petitioner must make such an inquiry. If such inquiry results in the discovery that the delay in paying the maintenance fee under 37 CFR 1.378(c) was intentional, petitioner must notify the Office.

The file does not indicate a change of address has been submitted, although the address given on the petition differs from the address of record. In appropriate, a change of address should be filed in accordance with MPEP 601.03. A courtesy copy of this decision is being mailed to the address given on the petition; however, the Office will mail all future correspondence solely to the address of record.

Telephone inquiries relating to this decision should be directed to Robert DeWitty, Petitions Attorney, Office of Petitions (571-272-8427).

for Anthony Knight
Director
Office of Petitions

cc: Jean K. Testa
GE Trading & Licensing, 1 Research Circle, ATTN Brandon K1-2A62A
Niskayuna, NY 12309

PTO/SB/66 (03-09)
Approved for use through 03/31/2012. OMB 0651-0016
U.S. Patent and Trademark Office: U.S. DEPARTMENT OF COMMERCE
Under the Paperwork Reduction Act of 1995, no persons are required to respond to a collection of information unless it displays valid OMB control number.

PETITION TO ACCEPT UNINTENTIONALLY DELAYED PAYMENT OF MAINTENANCE FEE IN AN EXPIRED PATENT (37 CFR 1.378(c))

Patent Number	Issue Date (YYYY-MM-DD)	Application Number	Filing Date (YYYY-MM-DD)	Docket Number (if applicable)
6,119,930	2000-09-19	09370147	1999-08-09	12695-19

CAUTION: Maintenance fee (and surcharge, if any) payment must correctly identify: (1) the patent number and (2) the application number of the actual U.S. application leading to issuance of that patent to ensure the fee(s) is/are associated with the correct patent. 37 CFR 1.366(c) and (d).

SMALL ENTITY

☒ Patentee claims, or has previously claimed, small entity status. See 37 CFR 1.27.

LOSS OF ENTITLEMENT TO SMALL ENTITY STATUS

☐ Patentee is no longer entitled to small entity status. See 37 CFR 1.27(g)

NOT Small Entity	Fee	Code	Small Entity	Fee	Code
○	3 ½ year	(1551)	○	3 ½ year	(2551)
○	7 ½ year	(1552)	◉	7 ½ year	(2552)
○	11 ½ year	(1553)	○	11 ½ year	(2553)

SURCHARGE

The surcharge required by 37 CFR 1.20(i)(2) (Fee Code 1558) must be paid as a condition of accepting unintentionally delayed payment of the maintenance fee.

MAINTENANCE FEE (37 CFR 1.20(e)-(g))

The appropriate maintenance fee must be submitted with this petition.

STATEMENT

THE UNDERSIGNED CERTIFIES THAT THE DELAY IN PAYMENT OF THE MAINTENANCE FEE TO THIS PATENT WAS UNINTENTIONAL

PETITIONER(S) REQUEST THAT THE DELAYED PAYMENT OF THE MAINTENANCE FEE BE ACCEPTED AND THE PATENT REINSTATED

THIS PORTION MUST BE COMPLETED BY THE SIGNATORY OR SIGNATORIES

37 CFR 1.378(d) states: "Any petition under this section must be signed by an attorney or agent registered to practice before the Patent and Trademark Office, or by the patentee, the assignee, or other party in interest."

I certify, in accordance with 37 CFR 1.4(d)(4) that I am

◉ An attorney or agent registered to practice before the Patent and Trademark Office

○ A sole patentee

○ A joint patentee; I certify that I am authorized to sign this submission on behalf of all the other patentees.

○ A joint patentee; all of whom are signing this e-petition

○ The assignee of record of the entire interest

PTO/SB/66 (03-09)
Approved for use through 03/31/2012. OMB 0651-0016
U.S. Patent and Trademark Office: U.S. DEPARTMENT OF COMMERCE
Under the Paperwork Reduction Act of 1995, no persons are required to respond to a collection of information unless it displays valid OMB control number.

Patent Practitioner			
A signature of the applicant or representative is required in accordance with 37 CFR 1.33 and 10.18. Please see 37 CFR 1.4(d) for the form of the signature			
Signature	/Stephen C. Smith/	Date (YYYY-MM-DD)	2010-08-04
Name	Stephen C. Smith	Registration Number	56250

This collection of information is required by 37 CFR 1.378(c). The information is required to obtain or retain a benefit by the public which is to file (and by the USPTO to process) an application. Confidentiality is governed by 35 U.S.C. 122 and 37 CFR 1.11 and 1.14. This collection is estimated to take 1 hour to complete, including gathering, preparing, and submitting the completed application form to the USPTO. Time will vary depending upon the individual case. Any comments on the amount of time you require to complete this form and/ or suggestions for reducing this burden, should be sent to the Chief Information Officer, U.S. Patent and Trademark Office, U.S. Department of Commerce, P.O. Box 1450, Alexandria, VA 22313-1450. DO NOT SEND FEES OR COMPLETED FORMS TO THIS ADDRESS. **This form can only be used when in conjunction with EFS-Web. If this form is mailed to the USPTO, it may cause delays in reinstating the patent.**

Privacy Act Statement

The Privacy Act of 1974 (P.L. 93-579) requires that you be given certain information in connection with your submission of the attached form related to a patent application or patent. Accordingly, pursuant to the requirements of the Act, please be advised that: (1) the general authority for the collection of this information is 35 U.S.C. 2(b)(2); (2) furnishing of the information solicited is voluntary; and (3) the principal purpose for which the information is used by the U.S. Patent and Trademark Office is to process and/or examine your submission related to a patent application or patent. If you do not furnish the requested information, the U.S. Patent and Trademark Office may not be able to process and/or examine your submission, which may result in termination of proceedings or abandonment of the application or expiration of the patent.

The information provided by you in this form will be subject to the following routine uses:

1. The information on this form will be treated confidentially to the extent allowed under the Freedom of Information Act (5 U.S.C. 552) and the Privacy Act (5 U.S.C. 552a). Records from this system of records may be disclosed to the Department of Justice to determine whether the Freedom of Information Act requires disclosure of these records.

2. A record from this system of records may be disclosed, as a routine use, in the course of presenting evidence to a court, magistrate, or administrative tribunal, including disclosures to opposing counsel in the course of settlement negotiations.

3. A record in this system of records may be disclosed, as a routine use, to a Member of Congress submitting a request involving an individual, to whom the record pertains, when the individual has requested assistance from the Member with respect to the subject matter of the record.

4. A record in this system of records may be disclosed, as a routine use, to a contractor of the Agency having need for the information in order to perform a contract. Recipients of information shall be required to comply with the requirements of the Privacy Act of 1974, as amended, pursuant to 5 U.S.C. 552a(m).

5. A record related to an International Application filed under the Patent Cooperation Treaty in this system of records may be disclosed, as a routine use, to the International Bureau of the World Intellectual Property Organization, pursuant to the Patent Cooperation Treaty.

6. A record in this system of records may be disclosed, as a routine use, to another federal agency for purposes of National Security review (35 U.S.C. 181) and for review pursuant to the Atomic Energy Act (42 U.S.C. 218(c)).

7. A record from this system of records may be disclosed, as a routine use, to the Administrator, General Services, or his/her designee, during an inspection of records conducted by GSA as part of that agency's responsibility to recommend improvements in records management practices and programs, under authority of 44 U.S.C. 2904 and 2906. Such disclosure shall be made in accordance with the GSA regulations governing inspection of records for this purpose, and any other relevant (i.e., GSA or Commerce) directive. Such disclosure shall not be used to make determinations about individuals.

8. A record from this system of records may be disclosed, as a routine use, to the public after either publication of the application pursuant to 35 U.S.C. 122(b) or issuance of a patent pursuant to 35 U.S.C. 151. Further, a record may be disclosed, subject to the limitations of 37 CFR 1.14, as a routine use, to the public if the record was filed in an application which became abandoned or in which the proceedings were terminated and which application is referenced by either a published application, an application open to public inspections or an issued patent.

9. A record from this system of records may be disclosed, as a routine use, to a Federal, State, or local law enforcement agency, if the USPTO becomes aware of a violation or potential violation of law or regulation.

UNITED STATES PATENT AND TRADEMARK OFFICE

Commissioner for Patents
United States Patent and Trademark Office
P.O. Box 1450
Alexandria, VA 22313-1450
www.uspto.gov

In re Patent No. 6119930
Issue Date: September 19,2000
Application No. 09370147
Filed: August 9,1999
Attorney Docket No. 12695-19

:
:DECISION GRANTING PETITION
:UNDER 37 CFR 1.378(c)
:

This is a decision on the electronic petition, filed August 16,2010 ,under 37 CFR 1.378(c) to accept the unintentionally delayed payment of the 7.5 year maintenance fee for the above-identified patent.

The petition is **GRANTED**.

The maintenance fee is accepted, and the above-identified patent reinstated as of August 16,2010 . This decision also constitutes notice that the fee has been accepted. An electronic copy of the petition and this decision has been created as an entry in the Image File Wrapper. Nevertheless, petitioner should print and retain an independent copy.

Telephone inquiries related to this electronic decision should be directed to the Electronic Business Center at 1-866-217-9197.

UNITED STATES PATENT AND TRADEMARK OFFICE

Commissioner for Patents
United States Patent and Trademark Office
P.O. Box 1450
Alexandria, VA 22313-1450
www.uspto.gov

MAILED
JUL 06 2011
OFFICE OF PETITIONS

K&L GATES LLP
STATE STREET FINANCIAL CENTER
ONE LINCOLN STREET
BOSTON MA 02111-2950

In re
Swanson, et al.
Application No. 09/370,756
Filed: August 9, 1999
Patent No. 6,445,939
Issued: September 3, 2002

DECISION

This is a decision on the fee deficiency submission under 37 CFR 1.28(c), filed June 9, 2011.

The fee deficiency submission under 37 CFR 1.28 of $1240 for the 7.5 year maintenance fee is hereby accepted.

The change of status to large entity has been entered.

Telephone inquiries concerning this matter may be directed to the undersigned at (571) 272-3207.

Cliff Congo
Petitions Attorney
Office of Petitions

UNITED STATES PATENT AND TRADEMARK OFFICE

Commissioner for Patents
United States Patent and Trademark Office
P.O. Box 1450
Alexandria, VA 22313-1450
www.uspto.gov

MINTZ, LEVIN, COHN, FERRIS,
GLOVSKY AND POPEO, P.C
ONE FINANCIAL CENTER
BOSTON MA 02111

MAILED

AUG 04 2011

OFFICE OF PETITIONS

In re Patent No.: 6,461,607 :
Issue Date: 19 June, 2007 :
Application No. 09/370,793 : DECISION
Filed: 5 August, 1999 :
Attorney Docket No. 19374-507 :

This is a decision on the petition filed on 27 June, 2011, under 37 C.F.R. §1.27(g)(2) requesting that status as a Small Entity be removed.

NOTE:

Petitioner is reminded to chart out the data as to: fee code, fee paid, fee presently due, and totals. (*See*: 37 C.F.R. §1.27, §1.28, MPEP §509.02, et seq.)

The Office does not attempt to infer the specifics of a Petitioner's intents.

In view of their duty of candor to the Office to properly inquire to ascertain the accuracy of representations made before the Office (*see*: 37 C.F.R. §1.4, §10.18, MPEP §410), Petitioners always are reminded of the responsibility to review their records and submit accurate information to the Office.

Petitioner's submission is **ACCEPTED**.

In accordance with the request, status as a Small Entity will be removed, and Petitioner is required to pay fees at the schedule set forth for not-small entities. **The additional fees were charged as authorized**.

The availability of applications and application papers online to applicants/practitioners who diligently associate their Customer Number with the respective application(s) now provides an applicant/practitioner on-demand information as to events/transactions in an application.

Patent No.: 6,461,607
Application No. 09/370,793

Out of an abundance of caution, Petitioners always are reminded that that those registered to practice and all others who make representations before the Office **must** inquire into the underlying facts of representations made to the Office and support averments with the appropriate documentation–since all owe to the Office the continuing duty to disclose.[1]

The instant application is released to the IFW Files Repository in due course.

Telephone inquiries regarding this decision may be directed to the undersigned at (571) 272-3214—it is noted, however, that all practice before the Office is in writing (see: 37 C.F.R. §1.2[2]) and the proper authority for action on any matter in this regard are the statutes (35 U.S.C.), regulations (37 C.F.R.) and the commentary on policy (MPEP). Therefore, no telephone discussion may be controlling or considered authority for Petitioner's action(s).

/John J. Gillon, Jr./
John J. Gillon, Jr.
Senior Attorney
Office of Petitions

[1] See supplement of 17 June, 1999. The Patent and Trademark Office is relying on Petitioner's duty of candor and good faith and accepting a statement made by Petitioner. See Changes to Patent Practice and Procedure, 62 Fed. Reg. at 53160 and 53178, 1203 Off. Gaz. Pat. Office at 88 and 103 (responses to comments 64 and 109)(applicant obligated under 37 C.F.R. §10.18 to inquire into the underlying facts and circumstances when providing statements to the Patent and Trademark Office).

[2] The regulations at 37 C.F.R. §1.2 provide:

§1.2 Business to be transacted in writing.

All business with the Patent and Trademark Office should be transacted in writing. The personal attendance of applicants or their attorneys or agents at the Patent and Trademark Office is unnecessary. The action of the Patent and Trademark Office will be based exclusively on the written record in the Office. No attention will be paid to any alleged oral promise, stipulation, or understanding in relation to which there is disagreement or doubt.

PTO/SB/66 (03-09)
Approved for use through 03/31/2012. OMB 0651-0016
U.S. Patent and Trademark Office: U.S. DEPARTMENT OF COMMERCE
Under the Paperwork Reduction Act of 1995, no persons are required to respond to a collection of information unless it displays valid OMB control number.

PETITION TO ACCEPT UNINTENTIONALLY DELAYED PAYMENT OF MAINTENANCE FEE IN AN EXPIRED PATENT (37 CFR 1.378(c))

Patent Number	Issue Date (YYYY-MM-DD)	Application Number	Filing Date (YYYY-MM-DD)	Docket Number (if applicable)
6,263,540	2001-07-24	09/370,877	1999-08-10	033011

CAUTION: Maintenance fee (and surcharge, if any) payment must correctly identify: (1) the patent number and (2) the application number of the actual U.S. application leading to issuance of that patent to ensure the fee(s) is/are associated with the correct patent. 37 CFR 1.366(c) and (d).

SMALL ENTITY

☒ Patentee claims, or has previously claimed, small entity status. See 37 CFR 1.27.

LOSS OF ENTITLEMENT TO SMALL ENTITY STATUS

☐ Patentee is no longer entitled to small entity status. See 37 CFR 1.27(g)

NOT Small Entity	Fee	Code	Small Entity	Fee	Code
○	3 ½ year	(1551)	○	3 ½ year	(2551)
○	7 ½ year	(1552)	◉	7 ½ year	(2552)
○	11 ½ year	(1553)	○	11 ½ year	(2553)

SURCHARGE

The surcharge required by 37 CFR 1.20(i)(2) (Fee Code 1558) must be paid as a condition of accepting unintentionally delayed payment of the maintenance fee.

MAINTENANCE FEE (37 CFR 1.20(e)-(g))

The appropriate maintenance fee must be submitted with this petition.

STATEMENT

THE UNDERSIGNED CERTIFIES THAT THE DELAY IN PAYMENT OF THE MAINTENANCE FEE TO THIS PATENT WAS UNINTENTIONAL

PETITIONER(S) REQUEST THAT THE DELAYED PAYMENT OF THE MAINTENANCE FEE BE ACCEPTED AND THE PATENT REINSTATED

THIS PORTION MUST BE COMPLETED BY THE SIGNATORY OR SIGNATORIES

37 CFR 1.378(d) states: "Any petition under this section must be signed by an attorney or agent registered to practice before the Patent and Trademark Office, or by the patentee, the assignee, or other party in interest."

I certify, in accordance with 37 CFR 1.4(d)(4) that I am

◉ An attorney or agent registered to practice before the Patent and Trademark Office

○ A sole patentee

○ A joint patentee; I certify that I am authorized to sign this submission on behalf of all the other patentees.

○ A joint patentee; all of whom are signing this e-petition

○ The assignee of record of the entire interest

PTO/SB/66 (03-09)
Approved for use through 03/31/2012. OMB 0651-0016
U.S. Patent and Trademark Office: U.S. DEPARTMENT OF COMMERCE
Under the Paperwork Reduction Act of 1995, no persons are required to respond to a collection of information unless it displays valid OMB control number.

Patent Practitioner			
A signature of the applicant or representative is required in accordance with 37 CFR 1.33 and 10.18. Please see 37 CFR 1.4(d) for the form of the signature			
Signature	/Carl J. Pellegrini/	Date (YYYY-MM-DD)	2011-06-28
Name	Carl J. Pellegrini	Registration Number	40766

This collection of information is required by 37 CFR 1.378(c). The information is required to obtain or retain a benefit by the public which is to file (and by the USPTO to process) an application. Confidentiality is governed by 35 U.S.C. 122 and 37 CFR 1.11 and 1.14. This collection is estimated to take 1 hour to complete, including gathering, preparing, and submitting the completed application form to the USPTO. Time will vary depending upon the individual case. Any comments on the amount of time you require to complete this form and/ or suggestions for reducing this burden, should be sent to the Chief Information Officer, U.S. Patent and Trademark Office, U.S. Department of Commerce, P.O. Box 1450, Alexandria, VA 22313-1450. DO NOT SEND FEES OR COMPLETED FORMS TO THIS ADDRESS. **This form can only be used when in conjunction with EFS-Web. If this form is mailed to the USPTO, it may cause delays in reinstating the patent.**

Privacy Act Statement

The Privacy Act of 1974 (P.L. 93-579) requires that you be given certain information in connection with your submission of the attached form related to a patent application or patent. Accordingly, pursuant to the requirements of the Act, please be advised that: (1) the general authority for the collection of this information is 35 U.S.C. 2(b)(2); (2) furnishing of the information solicited is voluntary; and (3) the principal purpose for which the information is used by the U.S. Patent and Trademark Office is to process and/or examine your submission related to a patent application or patent. If you do not furnish the requested information, the U.S. Patent and Trademark Office may not be able to process and/or examine your submission, which may result in termination of proceedings or abandonment of the application or expiration of the patent.

The information provided by you in this form will be subject to the following routine uses:

1. The information on this form will be treated confidentially to the extent allowed under the Freedom of Information Act (5 U.S.C. 552) and the Privacy Act (5 U.S.C. 552a). Records from this system of records may be disclosed to the Department of Justice to determine whether the Freedom of Information Act requires disclosure of these records.

2. A record from this system of records may be disclosed, as a routine use, in the course of presenting evidence to a court, magistrate, or administrative tribunal, including disclosures to opposing counsel in the course of settlement negotiations.

3. A record in this system of records may be disclosed, as a routine use, to a Member of Congress submitting a request involving an individual, to whom the record pertains, when the individual has requested assistance from the Member with respect to the subject matter of the record.

4. A record in this system of records may be disclosed, as a routine use, to a contractor of the Agency having need for the information in order to perform a contract. Recipients of information shall be required to comply with the requirements of the Privacy Act of 1974, as amended, pursuant to 5 U.S.C. 552a(m).

5. A record related to an International Application filed under the Patent Cooperation Treaty in this system of records may be disclosed, as a routine use, to the International Bureau of the World Intellectual Property Organization, pursuant to the Patent Cooperation Treaty.

6. A record in this system of records may be disclosed, as a routine use, to another federal agency for purposes of National Security review (35 U.S.C. 181) and for review pursuant to the Atomic Energy Act (42 U.S.C. 218(c)).

7. A record from this system of records may be disclosed, as a routine use, to the Administrator, General Services, or his/her designee, during an inspection of records conducted by GSA as part of that agency's responsibility to recommend improvements in records management practices and programs, under authority of 44 U.S.C. 2904 and 2906. Such disclosure shall be made in accordance with the GSA regulations governing inspection of records for this purpose, and any other relevant (i.e., GSA or Commerce) directive. Such disclosure shall not be used to make determinations about individuals.

8. A record from this system of records may be disclosed, as a routine use, to the public after either publication of the application pursuant to 35 U.S.C. 122(b) or issuance of a patent pursuant to 35 U.S.C. 151. Further, a record may be disclosed, subject to the limitations of 37 CFR 1.14, as a routine use, to the public if the record was filed in an application which became abandoned or in which the proceedings were terminated and which application is referenced by either a published application, an application open to public inspections or an issued patent.

9. A record from this system of records may be disclosed, as a routine use, to a Federal, State, or local law enforcement agency, if the USPTO becomes aware of a violation or potential violation of law or regulation.

UNITED STATES PATENT AND TRADEMARK OFFICE

Commissioner for Patents
United States Patent and Trademark Office
P.O. Box 1450
Alexandria, VA 22313-1450
www.uspto.gov

In re Patent No. 6263540
Issue Date: July 24,2001
Application No. 09370877
Filed: August 10,1999
Attorney Docket No. RV-19-US

:
:DECISION GRANTING PETITION
:UNDER 37 CFR 1.378(c)
:

This is a decision on the electronic petition, filed June 28,2011 ,under 37 CFR 1.378(c) to accept the unintentionally delayed payment of the 7.5 year maintenance fee for the above-identified patent.

The petition is **GRANTED**.

The maintenance fee is accepted, and the above-identified patent reinstated as of June 28,2011 .
This decision also constitutes notice that the fee has been accepted. An electronic copy of the petition and this decision has been created as an entry in the Image File Wrapper. Nevertheless, petitioner should print and retain an independent copy.

Telephone inquiries related to this electronic decision should be directed to the Electronic Business Center at 1-866-217-9197.

PTO/SB/66 (03-09)
Approved for use through 03/31/2012. OMB 0651-0016
U.S. Patent and Trademark Office: U.S. DEPARTMENT OF COMMERCE
Under the Paperwork Reduction Act of 1995, no persons are required to respond to a collection of information unless it displays valid OMB control number.

PETITION TO ACCEPT UNINTENTIONALLY DELAYED PAYMENT OF MAINTENANCE FEE IN AN EXPIRED PATENT (37 CFR 1.378(c))

Patent Number	Issue Date (YYYY-MM-DD)	Application Number	Filing Date (YYYY-MM-DD)	Docket Number (if applicable)
6519578	2003-02-11	09371145	1999-08-09	

CAUTION: Maintenance fee (and surcharge, if any) payment must correctly identify: (1) the patent number and (2) the application number of the actual U.S. application leading to issuance of that patent to ensure the fee(s) is/are associated with the correct patent. 37 CFR 1.366(c) and (d).

SMALL ENTITY

☐ Patentee claims, or has previously claimed, small entity status. See 37 CFR 1.27.

LOSS OF ENTITLEMENT TO SMALL ENTITY STATUS

☒ Patentee is no longer entitled to small entity status. See 37 CFR 1.27(g)

NOT Small Entity			Small Entity		
	Fee	Code		Fee	Code
○	3 ½ year	(1551)	○	3 ½ year	(2551)
◉	7 ½ year	(1552)	○	7 ½ year	(2552)
○	11 ½ year	(1553)	○	11 ½ year	(2553)

SURCHARGE

The surcharge required by 37 CFR 1.20(i)(2) (Fee Code 1558) must be paid as a condition of accepting unintentionally delayed payment of the maintenance fee.

MAINTENANCE FEE (37 CFR 1.20(e)-(g))

The appropriate maintenance fee must be submitted with this petition.

STATEMENT

THE UNDERSIGNED CERTIFIES THAT THE DELAY IN PAYMENT OF THE MAINTENANCE FEE TO THIS PATENT WAS UNINTENTIONAL

PETITIONER(S) REQUEST THAT THE DELAYED PAYMENT OF THE MAINTENANCE FEE BE ACCEPTED AND THE PATENT REINSTATED

THIS PORTION MUST BE COMPLETED BY THE SIGNATORY OR SIGNATORIES

37 CFR 1.378(d) states: "Any petition under this section must be signed by an attorney or agent registered to practice before the Patent and Trademark Office, or by the patentee, the assignee, or other party in interest."

I certify, in accordance with 37 CFR 1.4(d)(4) that I am

◉ An attorney or agent registered to practice before the Patent and Trademark Office

○ A sole patentee

○ A joint patentee; I certify that I am authorized to sign this submission on behalf of all the other patentees.

○ A joint patentee; all of whom are signing this e-petition

○ The assignee of record of the entire interest

PTO/SB/66 (03-09)
Approved for use through 03/31/2012. OMB 0651-0016
U.S. Patent and Trademark Office: U.S. DEPARTMENT OF COMMERCE
Under the Paperwork Reduction Act of 1995, no persons are required to respond to a collection of information unless it displays valid OMB control number.

Patent Practitioner			
A signature of the applicant or representative is required in accordance with 37 CFR 1.33 and 10.18. Please see 37 CFR 1.4(d) for the form of the signature			
Signature	/Robert Schuler/	Date (YYYY-MM-DD)	2001-09-22
Name	Robert C. Schuler	Registration Number	53567

This collection of information is required by 37 CFR 1.378(c). The information is required to obtain or retain a benefit by the public which is to file (and by the USPTO to process) an application. Confidentiality is governed by 35 U.S.C. 122 and 37 CFR 1.11 and 1.14. This collection is estimated to take 1 hour to complete, including gathering, preparing, and submitting the completed application form to the USPTO. Time will vary depending upon the individual case. Any comments on the amount of time you require to complete this form and/ or suggestions for reducing this burden, should be sent to the Chief Information Officer, U.S. Patent and Trademark Office, U.S. Department of Commerce, P.O. Box 1450, Alexandria, VA 22313-1450. DO NOT SEND FEES OR COMPLETED FORMS TO THIS ADDRESS. **This form can only be used when in conjunction with EFS-Web. If this form is mailed to the USPTO, it may cause delays in reinstating the patent.**

Privacy Act Statement

The Privacy Act of 1974 (P.L. 93-579) requires that you be given certain information in connection with your submission of the attached form related to a patent application or patent. Accordingly, pursuant to the requirements of the Act, please be advised that: (1) the general authority for the collection of this information is 35 U.S.C. 2(b)(2); (2) furnishing of the information solicited is voluntary; and (3) the principal purpose for which the information is used by the U.S. Patent and Trademark Office is to process and/or examine your submission related to a patent application or patent. If you do not furnish the requested information, the U.S. Patent and Trademark Office may not be able to process and/or examine your submission, which may result in termination of proceedings or abandonment of the application or expiration of the patent.

The information provided by you in this form will be subject to the following routine uses:

1. The information on this form will be treated confidentially to the extent allowed under the Freedom of Information Act (5 U.S.C. 552) and the Privacy Act (5 U.S.C. 552a). Records from this system of records may be disclosed to the Department of Justice to determine whether the Freedom of Information Act requires disclosure of these records.

2. A record from this system of records may be disclosed, as a routine use, in the course of presenting evidence to a court, magistrate, or administrative tribunal, including disclosures to opposing counsel in the course of settlement negotiations.

3. A record in this system of records may be disclosed, as a routine use, to a Member of Congress submitting a request involving an individual, to whom the record pertains, when the individual has requested assistance from the Member with respect to the subject matter of the record.

4. A record in this system of records may be disclosed, as a routine use, to a contractor of the Agency having need for the information in order to perform a contract. Recipients of information shall be required to comply with the requirements of the Privacy Act of 1974, as amended, pursuant to 5 U.S.C. 552a(m).

5. A record related to an International Application filed under the Patent Cooperation Treaty in this system of records may be disclosed, as a routine use, to the International Bureau of the World Intellectual Property Organization, pursuant to the Patent Cooperation Treaty.

6. A record in this system of records may be disclosed, as a routine use, to another federal agency for purposes of National Security review (35 U.S.C. 181) and for review pursuant to the Atomic Energy Act (42 U.S.C. 218(c)).

7. A record from this system of records may be disclosed, as a routine use, to the Administrator, General Services, or his/her designee, during an inspection of records conducted by GSA as part of that agency's responsibility to recommend improvements in records management practices and programs, under authority of 44 U.S.C. 2904 and 2906. Such disclosure shall be made in accordance with the GSA regulations governing inspection of records for this purpose, and any other relevant (i.e., GSA or Commerce) directive. Such disclosure shall not be used to make determinations about individuals.

8. A record from this system of records may be disclosed, as a routine use, to the public after either publication of the application pursuant to 35 U.S.C. 122(b) or issuance of a patent pursuant to 35 U.S.C. 151. Further, a record may be disclosed, subject to the limitations of 37 CFR 1.14, as a routine use, to the public if the record was filed in an application which became abandoned or in which the proceedings were terminated and which application is referenced by either a published application, an application open to public inspections or an issued patent.

9. A record from this system of records may be disclosed, as a routine use, to a Federal, State, or local law enforcement agency, if the USPTO becomes aware of a violation or potential violation of law or regulation.

UNITED STATES PATENT AND TRADEMARK OFFICE

Commissioner for Patents
United States Patent and Trademark Office
P.O. Box 1450
Alexandria, VA 22313-1450
www.uspto.gov

In re Patent No. 6519578
Issue Date: February 11,2003
Application No. 09371145
Filed: August 9,1999
Attorney Docket No. 066258.0108

:
:DECISION GRANTING PETITION
:UNDER 37 CFR 1.378(c)
:

This is a decision on the electronic petition, filed September 22,2011 ,under 37 CFR 1.378(c) to accept the unintentionally delayed payment of the 7.5 year maintenance fee for the above-identified patent.

The petition is **GRANTED**.

The maintenance fee is accepted, and the above-identified patent reinstated as of September 22,2011 . This decision also constitutes notice that the fee has been accepted. An electronic copy of the petition and this decision has been created as an entry in the Image File Wrapper. Nevertheless, petitioner should print and retain an independent copy.

Telephone inquiries related to this electronic decision should be directed to the Electronic Business Center at 1-866-217-9197.

SPE RESPONSE FOR CERTIFICATE OF CORRECTION

Paper No.: _____

DATE : January 9, 2012

TO SPE OF : ART UNIT 2614 SPE Curtis Kuntz.

SUBJECT : Request for Certificate of Correction for Appl. No.: 09/371,212 Patent No.: 7,848,496 B2

Please respond to this request for a certificate of correction within 7 days.

FOR IFW FILES:

Please review the requested changes/corrections as shown in the **COCIN** document(s) in the IFW application image. No new matter should be introduced, nor should the scope or meaning of the claims be changed.

Please complete the response (see below) and forward the completed response to scanning using document code **COCX**.

FOR PAPER FILES:

Please review the requested changes/corrections as shown in the attached certificate of correction. Please complete this form (see below) and forward it with the file to:

Certificates of Correction Branch (CofC)
Randolph Square Building
2800 South Randolph Street
Arlington, VA 22206

Should the dependencies of claims 4, 5, 33, and 34 be changed as requested by applicant?
See COCIN dated 12-12-2011

Antonio Johnson

Certificates of Correction Branch

(571)272-0483 Fax – (571)270-9846

Thank You For Your Assistance

The request for issuing the above-identified correction(s) is hereby:
Note your decision on the appropriate box.

X Approved	**All** changes apply.
☐ **Approved in Part**	Specify below which changes **do not** apply.
☐ **Denied**	State the reasons for denial below.

Comments: _____

_____

_____

_____ _____ **SPE /Curtis Kuntz/** **Art Unit 2614**

PTO/SB/66 (03-09)
Approved for use through 03/31/2012. OMB 0651-0016
U.S. Patent and Trademark Office: U.S. DEPARTMENT OF COMMERCE
Under the Paperwork Reduction Act of 1995, no persons are required to respond to a collection of information unless it displays valid OMB control number.

PETITION TO ACCEPT UNINTENTIONALLY DELAYED PAYMENT OF MAINTENANCE FEE IN AN EXPIRED PATENT (37 CFR 1.378(c))

Patent Number	Issue Date (YYYY-MM-DD)	Application Number	Filing Date (YYYY-MM-DD)	Docket Number (if applicable)
6848069	2005-01-25	09371275	1999-08-10	P-2509-US

CAUTION: Maintenance fee (and surcharge, if any) payment must correctly identify: (1) the patent number and (2) the application number of the actual U.S. application leading to issuance of that patent to ensure the fee(s) is/are associated with the correct patent. 37 CFR 1.366(c) and (d).

SMALL ENTITY

☐ Patentee claims, or has previously claimed, small entity status. See 37 CFR 1.27.

LOSS OF ENTITLEMENT TO SMALL ENTITY STATUS

☐ Patentee is no longer entitled to small entity status. See 37 CFR 1.27(g)

NOT Small Entity

	Fee	Code
◉	3 ½ year	(1551)
○	7 ½ year	(1552)
○	11 ½ year	(1553)

Small Entity

	Fee	Code
○	3 ½ year	(2551)
○	7 ½ year	(2552)
○	11 ½ year	(2553)

SURCHARGE

The surcharge required by 37 CFR 1.20(i)(2) (Fee Code 1558) must be paid as a condition of accepting unintentionally delayed payment of the maintenance fee.

MAINTENANCE FEE (37 CFR 1.20(e)-(g))

The appropriate maintenance fee must be submitted with this petition.

STATEMENT

THE UNDERSIGNED CERTIFIES THAT THE DELAY IN PAYMENT OF THE MAINTENANCE FEE TO THIS PATENT WAS UNINTENTIONAL

PETITIONER(S) REQUEST THAT THE DELAYED PAYMENT OF THE MAINTENANCE FEE BE ACCEPTED AND THE PATENT REINSTATED

THIS PORTION MUST BE COMPLETED BY THE SIGNATORY OR SIGNATORIES

37 CFR 1.378(d) states: "Any petition under this section must be signed by an attorney or agent registered to practice before the Patent and Trademark Office, or by the patentee, the assignee, or other party in interest."

I certify, in accordance with 37 CFR 1.4(d)(4) that I am

◉ An attorney or agent registered to practice before the Patent and Trademark Office

○ A sole patentee

○ A joint patentee; I certify that I am authorized to sign this submission on behalf of all the other patentees.

○ A joint patentee; all of whom are signing this e-petition

○ The assignee of record of the entire interest

PTO/SB/66 (03-09)
Approved for use through 03/31/2012. OMB 0651-0016
U.S. Patent and Trademark Office: U.S. DEPARTMENT OF COMMERCE
Under the Paperwork Reduction Act of 1995, no persons are required to respond to a collection of information unless it displays valid OMB control number.

Patent Practitioner			
A signature of the applicant or representative is required in accordance with 37 CFR 1.33 and 10.18. Please see 37 CFR 1.4(d) for the form of the signature			
Signature	/Kendal M. Sheets/	Date (YYYY-MM-DD)	2010-09-28
Name	Kendal M. Sheets	Registration Number	47077

This collection of information is required by 37 CFR 1.378(c). The information is required to obtain or retain a benefit by the public which is to file (and by the USPTO to process) an application. Confidentiality is governed by 35 U.S.C. 122 and 37 CFR 1.11 and 1.14. This collection is estimated to take 1 hour to complete, including gathering, preparing, and submitting the completed application form to the USPTO. Time will vary depending upon the individual case. Any comments on the amount of time you require to complete this form and/ or suggestions for reducing this burden, should be sent to the Chief Information Officer, U.S. Patent and Trademark Office, U.S. Department of Commerce, P.O. Box 1450, Alexandria, VA 22313-1450. DO NOT SEND FEES OR COMPLETED FORMS TO THIS ADDRESS. **This form can only be used when in conjunction with EFS-Web. If this form is mailed to the USPTO, it may cause delays in reinstating the patent.**

Privacy Act Statement

The Privacy Act of 1974 (P.L. 93-579) requires that you be given certain information in connection with your submission of the attached form related to a patent application or patent. Accordingly, pursuant to the requirements of the Act, please be advised that: (1) the general authority for the collection of this information is 35 U.S.C. 2(b)(2); (2) furnishing of the information solicited is voluntary; and (3) the principal purpose for which the information is used by the U.S. Patent and Trademark Office is to process and/or examine your submission related to a patent application or patent. If you do not furnish the requested information, the U.S. Patent and Trademark Office may not be able to process and/or examine your submission, which may result in termination of proceedings or abandonment of the application or expiration of the patent.

The information provided by you in this form will be subject to the following routine uses:

1. The information on this form will be treated confidentially to the extent allowed under the Freedom of Information Act (5 U.S.C. 552) and the Privacy Act (5 U.S.C. 552a). Records from this system of records may be disclosed to the Department of Justice to determine whether the Freedom of Information Act requires disclosure of these records.

2. A record from this system of records may be disclosed, as a routine use, in the course of presenting evidence to a court, magistrate, or administrative tribunal, including disclosures to opposing counsel in the course of settlement negotiations.

3. A record in this system of records may be disclosed, as a routine use, to a Member of Congress submitting a request involving an individual, to whom the record pertains, when the individual has requested assistance from the Member with respect to the subject matter of the record.

4. A record in this system of records may be disclosed, as a routine use, to a contractor of the Agency having need for the information in order to perform a contract. Recipients of information shall be required to comply with the requirements of the Privacy Act of 1974, as amended, pursuant to 5 U.S.C. 552a(m).

5. A record related to an International Application filed under the Patent Cooperation Treaty in this system of records may be disclosed, as a routine use, to the International Bureau of the World Intellectual Property Organization, pursuant to the Patent Cooperation Treaty.

6. A record in this system of records may be disclosed, as a routine use, to another federal agency for purposes of National Security review (35 U.S.C. 181) and for review pursuant to the Atomic Energy Act (42 U.S.C. 218(c)).

7. A record from this system of records may be disclosed, as a routine use, to the Administrator, General Services, or his/her designee, during an inspection of records conducted by GSA as part of that agency's responsibility to recommend improvements in records management practices and programs, under authority of 44 U.S.C. 2904 and 2906. Such disclosure shall be made in accordance with the GSA regulations governing inspection of records for this purpose, and any other relevant (i.e., GSA or Commerce) directive. Such disclosure shall not be used to make determinations about individuals.

8. A record from this system of records may be disclosed, as a routine use, to the public after either publication of the application pursuant to 35 U.S.C. 122(b) or issuance of a patent pursuant to 35 U.S.C. 151. Further, a record may be disclosed, subject to the limitations of 37 CFR 1.14, as a routine use, to the public if the record was filed in an application which became abandoned or in which the proceedings were terminated and which application is referenced by either a published application, an application open to public inspections or an issued patent.

9. A record from this system of records may be disclosed, as a routine use, to a Federal, State, or local law enforcement agency, if the USPTO becomes aware of a violation or potential violation of law or regulation.

UNITED STATES PATENT AND TRADEMARK OFFICE

Commissioner for Patents
United States Patent and Trademark Office
P.O. Box 1450
Alexandria, VA 22313-1450
www.uspto.gov

In re Patent No. 6848069
Issue Date: January 25,2005
Application No. 09371275
Filed: August 10,1999
Attorney Docket No. P-2509-US

:
:DECISION GRANTING PETITION
:UNDER 37 CFR 1.378(c)
:

This is a decision on the electronic petition, filed September 30,2010 ,under 37 CFR 1.378(c) to accept the unintentionally delayed payment of the 3.5 year maintenance fee for the above-identified patent.

The petition is **GRANTED**.

The maintenance fee is accepted, and the above-identified patent reinstated as of September 30,2010 . This decision also constitutes notice that the fee has been accepted. An electronic copy of the petition and this decision has been created as an entry in the Image File Wrapper. Nevertheless, petitioner should print and retain an independent copy.

Telephone inquiries related to this electronic decision should be directed to the Electronic Business Center at 1-866-217-9197.

PTO/SB/66 (03-09)
Approved for use through 03/31/2012. OMB 0651-0016
U.S. Patent and Trademark Office: U.S. DEPARTMENT OF COMMERCE
Under the Paperwork Reduction Act of 1995, no persons are required to respond to a collection of information unless it displays valid OMB control number.

PETITION TO ACCEPT UNINTENTIONALLY DELAYED PAYMENT OF MAINTENANCE FEE IN AN EXPIRED PATENT (37 CFR 1.378(c))

Patent Number	Issue Date (YYYY-MM-DD)	Application Number	Filing Date (YYYY-MM-DD)	Docket Number (if applicable)
6,256,827	2001-07-10	09/371,528	1999-08-10	032911

CAUTION: Maintenance fee (and surcharge, if any) payment must correctly identify: (1) the patent number and (2) the application number of the actual U.S. application leading to issuance of that patent to ensure the fee(s) is/are associated with the correct patent. 37 CFR 1.366(c) and (d).

SMALL ENTITY

☒ Patentee claims, or has previously claimed, small entity status. See 37 CFR 1.27.

LOSS OF ENTITLEMENT TO SMALL ENTITY STATUS

☐ Patentee is no longer entitled to small entity status. See 37 CFR 1.27(g)

NOT Small Entity	Fee	Code	Small Entity	Fee	Code
○	3 ½ year	(1551)	○	3 ½ year	(2551)
○	7 ½ year	(1552)	◉	7 ½ year	(2552)
○	11 ½ year	(1553)	○	11 ½ year	(2553)

SURCHARGE

The surcharge required by 37 CFR 1.20(i)(2) (Fee Code 1558) must be paid as a condition of accepting unintentionally delayed payment of the maintenance fee.

MAINTENANCE FEE (37 CFR 1.20(e)-(g))

The appropriate maintenance fee must be submitted with this petition.

STATEMENT

THE UNDERSIGNED CERTIFIES THAT THE DELAY IN PAYMENT OF THE MAINTENANCE FEE TO THIS PATENT WAS UNINTENTIONAL

PETITIONER(S) REQUEST THAT THE DELAYED PAYMENT OF THE MAINTENANCE FEE BE ACCEPTED AND THE PATENT REINSTATED

THIS PORTION MUST BE COMPLETED BY THE SIGNATORY OR SIGNATORIES

37 CFR 1.378(d) states: "Any petition under this section must be signed by an attorney or agent registered to practice before the Patent and Trademark Office, or by the patentee, the assignee, or other party in interest."

I certify, in accordance with 37 CFR 1.4(d)(4) that I am

◉ An attorney or agent registered to practice before the Patent and Trademark Office

○ A sole patentee

○ A joint patentee; I certify that I am authorized to sign this submission on behalf of all the other patentees.

○ A joint patentee; all of whom are signing this e-petition

○ The assignee of record of the entire interest

PTO/SB/66 (03-09)
Approved for use through 03/31/2012. OMB 0651-0016
U.S. Patent and Trademark Office: U.S. DEPARTMENT OF COMMERCE
Under the Paperwork Reduction Act of 1995, no persons are required to respond to a collection of information unless it displays valid OMB control number.

Patent Practitioner			
A signature of the applicant or representative is required in accordance with 37 CFR 1.33 and 10.18. Please see 37 CFR 1.4(d) for the form of the signature			
Signature	/Carl J. Pellegrini/	Date (YYYY-MM-DD)	2011-06-28
Name	Carl J. Pellegrini	Registration Number	40766

This collection of information is required by 37 CFR 1.378(c). The information is required to obtain or retain a benefit by the public which is to file (and by the USPTO to process) an application. Confidentiality is governed by 35 U.S.C. 122 and 37 CFR 1.11 and 1.14. This collection is estimated to take 1 hour to complete, including gathering, preparing, and submitting the completed application form to the USPTO. Time will vary depending upon the individual case. Any comments on the amount of time you require to complete this form and/ or suggestions for reducing this burden, should be sent to the Chief Information Officer, U.S. Patent and Trademark Office, U.S. Department of Commerce, P.O. Box 1450, Alexandria, VA 22313-1450. DO NOT SEND FEES OR COMPLETED FORMS TO THIS ADDRESS. **This form can only be used when in conjunction with EFS-Web. If this form is mailed to the USPTO, it may cause delays in reinstating the patent.**

Privacy Act Statement

The Privacy Act of 1974 (P.L. 93-579) requires that you be given certain information in connection with your submission of the attached form related to a patent application or patent. Accordingly, pursuant to the requirements of the Act, please be advised that: (1) the general authority for the collection of this information is 35 U.S.C. 2(b)(2); (2) furnishing of the information solicited is voluntary; and (3) the principal purpose for which the information is used by the U.S. Patent and Trademark Office is to process and/or examine your submission related to a patent application or patent. If you do not furnish the requested information, the U.S. Patent and Trademark Office may not be able to process and/or examine your submission, which may result in termination of proceedings or abandonment of the application or expiration of the patent.

The information provided by you in this form will be subject to the following routine uses:

1. The information on this form will be treated confidentially to the extent allowed under the Freedom of Information Act (5 U.S.C. 552) and the Privacy Act (5 U.S.C. 552a). Records from this system of records may be disclosed to the Department of Justice to determine whether the Freedom of Information Act requires disclosure of these records.

2. A record from this system of records may be disclosed, as a routine use, in the course of presenting evidence to a court, magistrate, or administrative tribunal, including disclosures to opposing counsel in the course of settlement negotiations.

3. A record in this system of records may be disclosed, as a routine use, to a Member of Congress submitting a request involving an individual, to whom the record pertains, when the individual has requested assistance from the Member with respect to the subject matter of the record.

4. A record in this system of records may be disclosed, as a routine use, to a contractor of the Agency having need for the information in order to perform a contract. Recipients of information shall be required to comply with the requirements of the Privacy Act of 1974, as amended, pursuant to 5 U.S.C. 552a(m).

5. A record related to an International Application filed under the Patent Cooperation Treaty in this system of records may be disclosed, as a routine use, to the International Bureau of the World Intellectual Property Organization, pursuant to the Patent Cooperation Treaty.

6. A record in this system of records may be disclosed, as a routine use, to another federal agency for purposes of National Security review (35 U.S.C. 181) and for review pursuant to the Atomic Energy Act (42 U.S.C. 218(c)).

7. A record from this system of records may be disclosed, as a routine use, to the Administrator, General Services, or his/her designee, during an inspection of records conducted by GSA as part of that agency's responsibility to recommend improvements in records management practices and programs, under authority of 44 U.S.C. 2904 and 2906. Such disclosure shall be made in accordance with the GSA regulations governing inspection of records for this purpose, and any other relevant (i.e., GSA or Commerce) directive. Such disclosure shall not be used to make determinations about individuals.

8. A record from this system of records may be disclosed, as a routine use, to the public after either publication of the application pursuant to 35 U.S.C. 122(b) or issuance of a patent pursuant to 35 U.S.C. 151. Further, a record may be disclosed, subject to the limitations of 37 CFR 1.14, as a routine use, to the public if the record was filed in an application which became abandoned or in which the proceedings were terminated and which application is referenced by either a published application, an application open to public inspections or an issued patent.

9. A record from this system of records may be disclosed, as a routine use, to a Federal, State, or local law enforcement agency, if the USPTO becomes aware of a violation or potential violation of law or regulation.

UNITED STATES PATENT AND TRADEMARK OFFICE

Commissioner for Patents
United States Patent and Trademark Office
P.O. Box 1450
Alexandria, VA 22313-1450
www.uspto.gov

In re Patent No. 6256827
Issue Date: July 10,2001
Application No. 09371528
Filed: August 10,1999
Attorney Docket No. RV-18-US

:
:DECISION GRANTING PETITION
:UNDER 37 CFR 1.378(c)
:

This is a decision on the electronic petition, filed June 28,2011 ,under 37 CFR 1.378(c) to accept the unintentionally delayed payment of the 7.5 year maintenance fee for the above-identified patent.

The petition is **GRANTED**.

The maintenance fee is accepted, and the above-identified patent reinstated as of June 28,2011 .
This decision also constitutes notice that the fee has been accepted. An electronic copy of the petition and this decision has been created as an entry in the Image File Wrapper. Nevertheless, petitioner should print and retain an independent copy.

Telephone inquiries related to this electronic decision should be directed to the Electronic Business Center at 1-866-217-9197.

UNITED STATES PATENT AND TRADEMARK OFFICE

Commissioner for Patents
United States Patent and Trademark Office
P.O. Box 1450
Alexandria, VA 22313-1450
www.uspto.gov

ROBERT SCHULER
45 GROTON ROAD
SHIRLEY MA 01464

MAILED

OCT 19 2011

OFFICE OF PETITIONS

In re Patent No. 6,629,096 :
Issue Date: September 20, 2003 :
Application No. 09/371,711 : NOTICE
Filed: August 9, 1999 :
Attorney Docket No. 066258.0106 :

This is a notice regarding your request for acceptance of a fee deficiency submission under 37 CFR 1.28 filed September 28, 2011. On September 1, 1998, the Court of Appeals for the Federal Circuit held that 37 CFR 1.28(c) is the sole provision governing the time for correction of the erroneous payment of the issue fee as a small entity. **See DH Technology v. Synergystex International, Inc. 154 F.3d 1333, 47 USPQ2d 1865 (Fed. Cir. Sept. 1, 1998).**

The Office no longer investigates or rejects original or reissue applications under 37 CFR 1.56. **1098 Off. Gaz. Pat. Office 502 (January 3, 1989)**. Therefore, nothing in this Notice is intended to imply that an investigation was done.

Your fee deficiency submission under 37 CFR 1.28 is hereby accepted. The petition is **GRANTED**.

This application is no longer entitled to small entity status. Accordingly, all future fees paid in this application must be paid at the large entity rate.

This file is being forwarded to Files Repository.

Telephone inquiries related to this decision should be directed to the Kimberly Inabinet at (571) 272-4618.

/Kimberly Inabinet/
Kimberly Inabinet
Petitions Examiner
Office of Petitions

UNITED STATES PATENT AND TRADEMARK OFFICE

Commissioner for Patents
United States Patent and Trademark Office
P.O. Box 1450
Alexandria, VA 22313-1450
www.uspto.gov

In re Patent No. 6519590
Issue Date: February 11,2003
Application No. 09371712
Filed: August 9,1999
Attorney Docket No. 066258.0107

:
:DECISION GRANTING PETITION
:UNDER 37 CFR 1.378(c)
:

This is a decision on the electronic petition, filed June 21,2011 ,under 37 CFR 1.378(c) to accept the unintentionally delayed payment of the 7.5 year maintenance fee for the above-identified patent.

The petition is **GRANTED**.

The maintenance fee is accepted, and the above-identified patent reinstated as of June 21,2011 .
This decision also constitutes notice that the fee has been accepted. An electronic copy of the petition and this decision has been created as an entry in the Image File Wrapper. Nevertheless, petitioner should print and retain an independent copy.

Telephone inquiries related to this electronic decision should be directed to the Electronic Business Center at 1-866-217-9197.

PTO/SB/66 (03-09)
Approved for use through 03/31/2012. OMB 0651-0016
U.S. Patent and Trademark Office: U.S. DEPARTMENT OF COMMERCE
Under the Paperwork Reduction Act of 1995, no persons are required to respond to a collection of information unless it displays valid OMB control number.

PETITION TO ACCEPT UNINTENTIONALLY DELAYED PAYMENT OF MAINTENANCE FEE IN AN EXPIRED PATENT (37 CFR 1.378(c))

Patent Number	Issue Date (YYYY-MM-DD)	Application Number	Filing Date (YYYY-MM-DD)	Docket Number (if applicable)
6519590	2003-02-11	09371712	1999-08-09	EMP.007

CAUTION: Maintenance fee (and surcharge, if any) payment must correctly identify: (1) the patent number and (2) the application number of the actual U.S. application leading to issuance of that patent to ensure the fee(s) is/are associated with the correct patent. 37 CFR 1.366(c) and (d).

SMALL ENTITY

☐ Patentee claims, or has previously claimed, small entity status. See 37 CFR 1.27.

LOSS OF ENTITLEMENT TO SMALL ENTITY STATUS

☒ Patentee is no longer entitled to small entity status. See 37 CFR 1.27(g)

NOT Small Entity			Small Entity		
	Fee	Code		Fee	Code
○	3 ½ year	(1551)	○	3 ½ year	(2551)
◉	7 ½ year	(1552)	○	7 ½ year	(2552)
○	11 ½ year	(1553)	○	11 ½ year	(2553)

SURCHARGE

The surcharge required by 37 CFR 1.20(i)(2) (Fee Code 1558) must be paid as a condition of accepting unintentionally delayed payment of the maintenance fee.

MAINTENANCE FEE (37 CFR 1.20(e)-(g))

The appropriate maintenance fee must be submitted with this petition.

STATEMENT

THE UNDERSIGNED CERTIFIES THAT THE DELAY IN PAYMENT OF THE MAINTENANCE FEE TO THIS PATENT WAS UNINTENTIONAL

PETITIONER(S) REQUEST THAT THE DELAYED PAYMENT OF THE MAINTENANCE FEE BE ACCEPTED AND THE PATENT REINSTATED

THIS PORTION MUST BE COMPLETED BY THE SIGNATORY OR SIGNATORIES

37 CFR 1.378(d) states: "Any petition under this section must be signed by an attorney or agent registered to practice before the Patent and Trademark Office, or by the patentee, the assignee, or other party in interest."

I certify, in accordance with 37 CFR 1.4(d)(4) that I am

◉ An attorney or agent registered to practice before the Patent and Trademark Office

○ A sole patentee

○ A joint patentee; I certify that I am authorized to sign this submission on behalf of all the other patentees.

○ A joint patentee; all of whom are signing this e-petition

○ The assignee of record of the entire interest

PTO/SB/66 (03-09)
Approved for use through 03/31/2012. OMB 0651-0016
U.S. Patent and Trademark Office: U.S. DEPARTMENT OF COMMERCE
Under the Paperwork Reduction Act of 1995, no persons are required to respond to a collection of information unless it displays valid OMB control number.

Patent Practitioner			
A signature of the applicant or representative is required in accordance with 37 CFR 1.33 and 10.18. Please see 37 CFR 1.4(d) for the form of the signature			
Signature	/Robert Schuler/	Date (YYYY-MM-DD)	2011-06-21
Name	Robert C. Schuler	Registration Number	53567

This collection of information is required by 37 CFR 1.378(c). The information is required to obtain or retain a benefit by the public which is to file (and by the USPTO to process) an application. Confidentiality is governed by 35 U.S.C. 122 and 37 CFR 1.11 and 1.14. This collection is estimated to take 1 hour to complete, including gathering, preparing, and submitting the completed application form to the USPTO. Time will vary depending upon the individual case. Any comments on the amount of time you require to complete this form and/ or suggestions for reducing this burden, should be sent to the Chief Information Officer, U.S. Patent and Trademark Office, U.S. Department of Commerce, P.O. Box 1450, Alexandria, VA 22313-1450. DO NOT SEND FEES OR COMPLETED FORMS TO THIS ADDRESS. **This form can only be used when in conjunction with EFS-Web. If this form is mailed to the USPTO, it may cause delays in reinstating the patent.**

Privacy Act Statement

The Privacy Act of 1974 (P.L. 93-579) requires that you be given certain information in connection with your submission of the attached form related to a patent application or patent. Accordingly, pursuant to the requirements of the Act, please be advised that: (1) the general authority for the collection of this information is 35 U.S.C. 2(b)(2); (2) furnishing of the information solicited is voluntary; and (3) the principal purpose for which the information is used by the U.S. Patent and Trademark Office is to process and/or examine your submission related to a patent application or patent. If you do not furnish the requested information, the U.S. Patent and Trademark Office may not be able to process and/or examine your submission, which may result in termination of proceedings or abandonment of the application or expiration of the patent.

The information provided by you in this form will be subject to the following routine uses:

1. The information on this form will be treated confidentially to the extent allowed under the Freedom of Information Act (5 U.S.C. 552) and the Privacy Act (5 U.S.C. 552a). Records from this system of records may be disclosed to the Department of Justice to determine whether the Freedom of Information Act requires disclosure of these records.

2. A record from this system of records may be disclosed, as a routine use, in the course of presenting evidence to a court, magistrate, or administrative tribunal, including disclosures to opposing counsel in the course of settlement negotiations.

3. A record in this system of records may be disclosed, as a routine use, to a Member of Congress submitting a request involving an individual, to whom the record pertains, when the individual has requested assistance from the Member with respect to the subject matter of the record.

4. A record in this system of records may be disclosed, as a routine use, to a contractor of the Agency having need for the information in order to perform a contract. Recipients of information shall be required to comply with the requirements of the Privacy Act of 1974, as amended, pursuant to 5 U.S.C. 552a(m).

5. A record related to an International Application filed under the Patent Cooperation Treaty in this system of records may be disclosed, as a routine use, to the International Bureau of the World Intellectual Property Organization, pursuant to the Patent Cooperation Treaty.

6. A record in this system of records may be disclosed, as a routine use, to another federal agency for purposes of National Security review (35 U.S.C. 181) and for review pursuant to the Atomic Energy Act (42 U.S.C. 218(c)).

7. A record from this system of records may be disclosed, as a routine use, to the Administrator, General Services, or his/her designee, during an inspection of records conducted by GSA as part of that agency's responsibility to recommend improvements in records management practices and programs, under authority of 44 U.S.C. 2904 and 2906. Such disclosure shall be made in accordance with the GSA regulations governing inspection of records for this purpose, and any other relevant (i.e., GSA or Commerce) directive. Such disclosure shall not be used to make determinations about individuals.

8. A record from this system of records may be disclosed, as a routine use, to the public after either publication of the application pursuant to 35 U.S.C. 122(b) or issuance of a patent pursuant to 35 U.S.C. 151. Further, a record may be disclosed, subject to the limitations of 37 CFR 1.14, as a routine use, to the public if the record was filed in an application which became abandoned or in which the proceedings were terminated and which application is referenced by either a published application, an application open to public inspections or an issued patent.

9. A record from this system of records may be disclosed, as a routine use, to a Federal, State, or local law enforcement agency, if the USPTO becomes aware of a violation or potential violation of law or regulation.

UNITED STATES PATENT AND TRADEMARK OFFICE

Commissioner for Patents
United States Patent and Trademark Office
P.O. Box 1450
Alexandria, VA 22313-1450
www.uspto.gov

In re Patent No. 6328878
Issue Date: December 11,2001
Application No. 09372074
Filed: August 11,1999
Attorney Docket No.

:
:DECISION GRANTING PETITION
:UNDER 37 CFR 1.378(c)
:

This is a decision on the electronic petition, filed March 24,2011 ,under 37 CFR 1.378(c) to accept the unintentionally delayed payment of the 7.5 year maintenance fee for the above-identified patent.

The petition is **GRANTED**.

The maintenance fee is accepted, and the above-identified patent reinstated as of March 24,2011 . This decision also constitutes notice that the fee has been accepted. An electronic copy of the petition and this decision has been created as an entry in the Image File Wrapper. Nevertheless, petitioner should print and retain an independent copy.

Telephone inquiries related to this electronic decision should be directed to the Electronic Business Center at 1-866-217-9197.

PTO/SB/66 (03-09)
Approved for use through 03/31/2012. OMB 0651-0016
U.S. Patent and Trademark Office: U.S. DEPARTMENT OF COMMERCE
Under the Paperwork Reduction Act of 1995, no persons are required to respond to a collection of information unless it displays valid OMB control number.

PETITION TO ACCEPT UNINTENTIONALLY DELAYED PAYMENT OF MAINTENANCE FEE IN AN EXPIRED PATENT (37 CFR 1.378(c))

Patent Number	Issue Date (YYYY-MM-DD)	Application Number	Filing Date (YYYY-MM-DD)	Docket Number (if applicable)
6328878	2001-12-11	09372074	1999-08-11	

CAUTION: Maintenance fee (and surcharge, if any) payment must correctly identify: (1) the patent number and (2) the application number of the actual U.S. application leading to issuance of that patent to ensure the fee(s) is/are associated with the correct patent. 37 CFR 1.366(c) and (d).

SMALL ENTITY

☒ Patentee claims, or has previously claimed, small entity status. See 37 CFR 1.27.

LOSS OF ENTITLEMENT TO SMALL ENTITY STATUS

☐ Patentee is no longer entitled to small entity status. See 37 CFR 1.27(g)

NOT Small Entity	Fee	Code	Small Entity	Fee	Code
○	3 ½ year	(1551)	○	3 ½ year	(2551)
○	7 ½ year	(1552)	◉	7 ½ year	(2552)
○	11 ½ year	(1553)	○	11 ½ year	(2553)

SURCHARGE

The surcharge required by 37 CFR 1.20(i)(2) (Fee Code 1558) must be paid as a condition of accepting unintentionally delayed payment of the maintenance fee.

MAINTENANCE FEE (37 CFR 1.20(e)-(g))

The appropriate maintenance fee must be submitted with this petition.

STATEMENT

THE UNDERSIGNED CERTIFIES THAT THE DELAY IN PAYMENT OF THE MAINTENANCE FEE TO THIS PATENT WAS UNINTENTIONAL

PETITIONER(S) REQUEST THAT THE DELAYED PAYMENT OF THE MAINTENANCE FEE BE ACCEPTED AND THE PATENT REINSTATED

THIS PORTION MUST BE COMPLETED BY THE SIGNATORY OR SIGNATORIES

37 CFR 1.378(d) states: "Any petition under this section must be signed by an attorney or agent registered to practice before the Patent and Trademark Office, or by the patentee, the assignee, or other party in interest."

I certify, in accordance with 37 CFR 1.4(d)(4) that I am

○ An attorney or agent registered to practice before the Patent and Trademark Office

○ A sole patentee

○ A joint patentee; I certify that I am authorized to sign this submission on behalf of all the other patentees.

○ A joint patentee; all of whom are signing this e-petition

◉ The assignee of record of the entire interest

PTO/SB/66 (03-09)
Approved for use through 03/31/2012. OMB 0651-0016
U.S. Patent and Trademark Office: U.S. DEPARTMENT OF COMMERCE
Under the Paperwork Reduction Act of 1995, no persons are required to respond to a collection of information unless it displays valid OMB control number.

The Assignee of record of the entire interest			
Under 37 CFR 3.71 an assignee becomes of record by filing a statement in compliance with 37 CFR 3.73(b). Signature requirements are set forth in 37 CFR 1.4(d), and the undersigned certifies that he / she is empowered to act on behalf of the assignee of the entire interest			
Signature	/Chester M Dacres/	Date (YYYY-MM-DD)	2011-03-24
Name	Chester M. Dacres		
Enter Reel and Frame Number		Remove	
Reel Number	011527	Frame Number	0659
Click ADD for additional Reel Number and Frame Number		Add	

This collection of information is required by 37 CFR 1.378(c). The information is required to obtain or retain a benefit by the public which is to file (and by the USPTO to process) an application. Confidentiality is governed by 35 U.S.C. 122 and 37 CFR 1.11 and 1.14. This collection is estimated to take 1 hour to complete, including gathering, preparing, and submitting the completed application form to the USPTO. Time will vary depending upon the individual case. Any comments on the amount of time you require to complete this form and/ or suggestions for reducing this burden, should be sent to the Chief Information Officer, U.S. Patent and Trademark Office, U.S. Department of Commerce, P.O. Box 1450, Alexandria, VA 22313-1450. DO NOT SEND FEES OR COMPLETED FORMS TO THIS ADDRESS. **This form can only be used when in conjunction with EFS-Web. If this form is mailed to the USPTO, it may cause delays in reinstating the patent.**

Privacy Act Statement

The Privacy Act of 1974 (P.L. 93-579) requires that you be given certain information in connection with your submission of the attached form related to a patent application or patent. Accordingly, pursuant to the requirements of the Act, please be advised that: (1) the general authority for the collection of this information is 35 U.S.C. 2(b)(2); (2) furnishing of the information solicited is voluntary; and (3) the principal purpose for which the information is used by the U.S. Patent and Trademark Office is to process and/or examine your submission related to a patent application or patent. If you do not furnish the requested information, the U.S. Patent and Trademark Office may not be able to process and/or examine your submission, which may result in termination of proceedings or abandonment of the application or expiration of the patent.

The information provided by you in this form will be subject to the following routine uses:

1. The information on this form will be treated confidentially to the extent allowed under the Freedom of Information Act (5 U.S.C. 552) and the Privacy Act (5 U.S.C. 552a). Records from this system of records may be disclosed to the Department of Justice to determine whether the Freedom of Information Act requires disclosure of these records.

2. A record from this system of records may be disclosed, as a routine use, in the course of presenting evidence to a court, magistrate, or administrative tribunal, including disclosures to opposing counsel in the course of settlement negotiations.

3. A record in this system of records may be disclosed, as a routine use, to a Member of Congress submitting a request involving an individual, to whom the record pertains, when the individual has requested assistance from the Member with respect to the subject matter of the record.

4. A record in this system of records may be disclosed, as a routine use, to a contractor of the Agency having need for the information in order to perform a contract. Recipients of information shall be required to comply with the requirements of the Privacy Act of 1974, as amended, pursuant to 5 U.S.C. 552a(m).

5. A record related to an International Application filed under the Patent Cooperation Treaty in this system of records may be disclosed, as a routine use, to the International Bureau of the World Intellectual Property Organization, pursuant to the Patent Cooperation Treaty.

6. A record in this system of records may be disclosed, as a routine use, to another federal agency for purposes of National Security review (35 U.S.C. 181) and for review pursuant to the Atomic Energy Act (42 U.S.C. 218(c)).

7. A record from this system of records may be disclosed, as a routine use, to the Administrator, General Services, or his/her designee, during an inspection of records conducted by GSA as part of that agency's responsibility to recommend improvements in records management practices and programs, under authority of 44 U.S.C. 2904 and 2906. Such disclosure shall be made in accordance with the GSA regulations governing inspection of records for this purpose, and any other relevant (i.e., GSA or Commerce) directive. Such disclosure shall not be used to make determinations about individuals.

8. A record from this system of records may be disclosed, as a routine use, to the public after either publication of the application pursuant to 35 U.S.C. 122(b) or issuance of a patent pursuant to 35 U.S.C. 151. Further, a record may be disclosed, subject to the limitations of 37 CFR 1.14, as a routine use, to the public if the record was filed in an application which became abandoned or in which the proceedings were terminated and which application is referenced by either a published application, an application open to public inspections or an issued patent.

9. A record from this system of records may be disclosed, as a routine use, to a Federal, State, or local law enforcement agency, if the USPTO becomes aware of a violation or potential violation of law or regulation.

UNITED STATES PATENT AND TRADEMARK OFFICE

Commissioner for Patents
United States Patent and Trademark Office
P.O. Box 1450
Alexandria, VA 22313-1450
www.uspto.gov

MUIRHEAD AND SATURNELLI, LLC
200 FRIBERG PARKWAY, SUITE 1001
WESTBOROUGH MA 01581

MAILED

OCT 14 2010

OFFICE OF PETITIONS

In re Application of Hiroshi Mizutani :
Application No. 09/372,322 :
Filing Date: August 11, 2009 :
Attorney Docket No. NEM-01601 :

Decision on Petition

This is a decision on the "Petition to Withdraw Abandonment Under 37 CFR §1.181" filed April 29, 2004. The Office regrets the delay in the issuance of the instant decision.

The petition is **granted to the extent indicated herein.**

A Notice of Appeal was filed May 19, 2003.

Petitioner filed a request for a 5-month extension of time on December 15, 2003. The request was accompanied by payment of $2,010 for the extension of time.

Petitioner also filed Application No. 10/737,261, which is a continuation of the instant application, on December 15, 2003.

The Office mailed a Notice of Abandonment on April 20, 2004. The notice stated,

> This application is abandoned in view of ... Applicant's failure to timely file a proper reply.... A reply was received on 15 December 2003 ... which is after the expiration of the period for reply (including a time of 4 month(s)) which expired on 19 November 2003.

The petition asserts the December 15, 2003 request for a five-month extension of time was timely. The Office agrees the December 15, 2003 payment for an extension of time was timely. In view of the extension of time, the last date of the period for filing an appeal brief was Friday, December 19, 2003. An appeal brief was not filed on or before December 19, 2003. As a result, the appeal was dismissed. As no claim was allowed, the application became abandoned on December 20, 2003. *See* MPEP 1215.04

In view of the prior discussion, Office records will be corrected to indicate the date of abandonment for the application is December 20, 2003.

The instant petition is *not* granted to the extent, if any, Petitioner is asserting the application is not currently abandoned. A brief was not timely filed and no claim had been allowed. Therefore, the application is abandoned.

Any request for reconsideration must be submitted within TWO (2) MONTHS from the mail date of this decision. No further petition fee is required for the request. Extensions of time under 37 CFR 1.136(a) are NOT permitted. The reconsideration request should include a cover letter entitled "Renewed Petition under 37 CFR 1.181." This is **not** final agency action within the meaning of 5 U.S.C. § 704.

Further correspondence with respect to this matter may be submitted as follows:

By Internet: A request for reconsideration may be filed electronically using EFS Web.[1] Document Code "PET.OP" should be used if the request is filed electronically.

By mail:
Mail Stop Petition
Commissioner for Patents
P.O. Box 1450
Alexandria, VA 22313-1450

By facsimile: (571) 273-8300
Attn: Office of Petitions

By hand:
U.S. Patent and Trademark Office
Customer Service Window
Randolph Building
401 Dulany Street
Alexandria, VA 22314

Telephone inquiries regarding this communication should be directed to Petitions Attorney Steven Brantley at (571) 272-3203.

Charles Steven Brantley
Senior Petitions Attorney
Office of Petitions

[1] General Information concerning EFS Web can be found at http://www.uspto.gov/patents/process/file/efs/index.jsp.

UNITED STATES PATENT AND TRADEMARK OFFICE

Commissioner for Patents
United States Patent and Trademark Office
P.O. Box 1450
Alexandria, VA 22313-1450
www.uspto.gov

TROY J COLE
WOODARD EMHARDT NAUGHTON MORIARTY
& MCNETT BANK ONE CENTER TOWER
111 MONUMENT CIRCLE SUITE 3700
INDIANAPOLIS IN 46204-5137

MAILED
APR 01 2011
OFFICE OF PETITIONS

Patent No. 6,356,830 :
Application No. 09/372,351 :
Filed: August 11, 1999 : ON PETITION
Issued: March 12, 2002 :
Attorney Docket No. PU 98060 :

This is a decision on the petition under 37 CFR 1.378(c), filed February 9, 2011, to accept the unintentionally delayed payment of a maintenance fee for the above-identified patent.

The petition is **GRANTED**.

The patent issued March 12, 2002. The last day of the grace period for paying the 7.5-year maintenance fee was March 12, 2010. Therefore, since this petition was filed within twenty-four months after the six-month grace period provided in 37 CFR 1.362(e), this petition was timely filed under the provisions of 37 CFR 1.378(c).

The maintenance fee is hereby accepted and the above-identified patent is reinstated as of the mail date of this decision.

It is not apparent whether the person signing the instant petition was ever given a power of attorney or authorization of agent to prosecute this patent. In accordance with 37 CFR 1.34(a), the signature appearing on the petition shall constitute a representation to the United States Patent and Trademark Office that he/she is authorized to represent the particular party in whose behalf he/she acts. While a courtesy copy of this decision is being mailed to the person signing the instant petition, all future correspondence will be directed solely to the address currently of record until such time as appropriate instructions are received to the contrary.

Petitioner should note that submission of a power of attorney and/or a change of correspondence address would not affect the fee address. Therefore, if petitioner desires to receive future correspondence, which **may** be mailed regarding maintenance fees for the above-identified patent, the "fee address" and/or "customer number" forms should be submitted to the Maintenance Fee Division.

Telephone inquiries concerning this decision should be directed to the undersigned at (571) 272-3206.

Liana Walsh
Petitions Examiner
Office of Petitions

cc: EDWARD J. TIMMER
121 EAST FRONT STREET, SUITE 205
TRAVERSE CITY, MI 49684

UNITED STATES PATENT AND TRADEMARK OFFICE

Commissioner for Patents
United States Patent and Trademark Office
P.O. Box 1450
Alexandria, VA 22313-1450
www.uspto.gov

In re Patent No. 6493681
Issue Date: December 10,2002
Application No. 09372507
Filed: August 11,1999
Attorney Docket No.

:
:DECISION GRANTING PETITION
:UNDER 37 CFR 1.378(c)
:

This is a decision on the electronic petition, filed March 15,2011 ,under 37 CFR 1.378(c) to accept the unintentionally delayed payment of the 7.5 year maintenance fee for the above-identified patent.

The petition is **GRANTED**.

The maintenance fee is accepted, and the above-identified patent reinstated as of March 15,2011 .
This decision also constitutes notice that the fee has been accepted. An electronic copy of the petition and this decision has been created as an entry in the Image File Wrapper. Nevertheless, petitioner should print and retain an independent copy.

Telephone inquiries related to this electronic decision should be directed to the Electronic Business Center at 1-866-217-9197.

PTO/SB/66 (03-09)
Approved for use through 03/31/2012. OMB 0651-0016
U.S. Patent and Trademark Office: U.S. DEPARTMENT OF COMMERCE
Under the Paperwork Reduction Act of 1995, no persons are required to respond to a collection of information unless it displays valid OMB control number.

PETITION TO ACCEPT UNINTENTIONALLY DELAYED PAYMENT OF MAINTENANCE FEE IN AN EXPIRED PATENT (37 CFR 1.378(c))

Patent Number	Issue Date (YYYY-MM-DD)	Application Number	Filing Date (YYYY-MM-DD)	Docket Number (if applicable)
6493681	2002-12-10	09372507	1999-08-11	60041-0011

CAUTION: Maintenance fee (and surcharge, if any) payment must correctly identify: (1) the patent number and (2) the application number of the actual U.S. application leading to issuance of that patent to ensure the fee(s) is/are associated with the correct patent. 37 CFR 1.366(c) and (d).

SMALL ENTITY

☒ Patentee claims, or has previously claimed, small entity status. See 37 CFR 1.27.

LOSS OF ENTITLEMENT TO SMALL ENTITY STATUS

☐ Patentee is no longer entitled to small entity status. See 37 CFR 1.27(g)

NOT Small Entity			Small Entity		
	Fee	Code		Fee	Code
○	3 ½ year	(1551)	○	3 ½ year	(2551)
○	7 ½ year	(1552)	◉	7 ½ year	(2552)
○	11 ½ year	(1553)	○	11 ½ year	(2553)

SURCHARGE

The surcharge required by 37 CFR 1.20(i)(2) (Fee Code 1558) must be paid as a condition of accepting unintentionally delayed payment of the maintenance fee.

MAINTENANCE FEE (37 CFR 1.20(e)-(g))

The appropriate maintenance fee must be submitted with this petition.

STATEMENT

THE UNDERSIGNED CERTIFIES THAT THE DELAY IN PAYMENT OF THE MAINTENANCE FEE TO THIS PATENT WAS UNINTENTIONAL

PETITIONER(S) REQUEST THAT THE DELAYED PAYMENT OF THE MAINTENANCE FEE BE ACCEPTED AND THE PATENT REINSTATED

THIS PORTION MUST BE COMPLETED BY THE SIGNATORY OR SIGNATORIES

37 CFR 1.378(d) states: "Any petition under this section must be signed by an attorney or agent registered to practice before the Patent and Trademark Office, or by the patentee, the assignee, or other party in interest."

I certify, in accordance with 37 CFR 1.4(d)(4) that I am

◉ An attorney or agent registered to practice before the Patent and Trademark Office

○ A sole patentee

○ A joint patentee; I certify that I am authorized to sign this submission on behalf of all the other patentees.

○ A joint patentee; all of whom are signing this e-petition

○ The assignee of record of the entire interest

PTO/SB/66 (03-09)
Approved for use through 03/31/2012. OMB 0651-0016
U.S. Patent and Trademark Office: U.S. DEPARTMENT OF COMMERCE
Under the Paperwork Reduction Act of 1995, no persons are required to respond to a collection of information unless it displays valid OMB control number.

Patent Practitioner			
A signature of the applicant or representative is required in accordance with 37 CFR 1.33 and 10.18. Please see 37 CFR 1.4(d) for the form of the signature			
Signature	/ChristopherJPalermo#42056/	Date (YYYY-MM-DD)	2011-03-15
Name	Christopher J. Palermo	Registration Number	42056

This collection of information is required by 37 CFR 1.378(c). The information is required to obtain or retain a benefit by the public which is to file (and by the USPTO to process) an application. Confidentiality is governed by 35 U.S.C. 122 and 37 CFR 1.11 and 1.14. This collection is estimated to take 1 hour to complete, including gathering, preparing, and submitting the completed application form to the USPTO. Time will vary depending upon the individual case. Any comments on the amount of time you require to complete this form and/or suggestions for reducing this burden, should be sent to the Chief Information Officer, U.S. Patent and Trademark Office, U.S. Department of Commerce, P.O. Box 1450, Alexandria, VA 22313-1450. DO NOT SEND FEES OR COMPLETED FORMS TO THIS ADDRESS. **This form can only be used when in conjunction with EFS-Web. If this form is mailed to the USPTO, it may cause delays in reinstating the patent.**

Privacy Act Statement

The Privacy Act of 1974 (P.L. 93-579) requires that you be given certain information in connection with your submission of the attached form related to a patent application or patent. Accordingly, pursuant to the requirements of the Act, please be advised that: (1) the general authority for the collection of this information is 35 U.S.C. 2(b)(2); (2) furnishing of the information solicited is voluntary; and (3) the principal purpose for which the information is used by the U.S. Patent and Trademark Office is to process and/or examine your submission related to a patent application or patent. If you do not furnish the requested information, the U.S. Patent and Trademark Office may not be able to process and/or examine your submission, which may result in termination of proceedings or abandonment of the application or expiration of the patent.

The information provided by you in this form will be subject to the following routine uses:

1. The information on this form will be treated confidentially to the extent allowed under the Freedom of Information Act (5 U.S.C. 552) and the Privacy Act (5 U.S.C. 552a). Records from this system of records may be disclosed to the Department of Justice to determine whether the Freedom of Information Act requires disclosure of these records.

2. A record from this system of records may be disclosed, as a routine use, in the course of presenting evidence to a court, magistrate, or administrative tribunal, including disclosures to opposing counsel in the course of settlement negotiations.

3. A record in this system of records may be disclosed, as a routine use, to a Member of Congress submitting a request involving an individual, to whom the record pertains, when the individual has requested assistance from the Member with respect to the subject matter of the record.

4. A record in this system of records may be disclosed, as a routine use, to a contractor of the Agency having need for the information in order to perform a contract. Recipients of information shall be required to comply with the requirements of the Privacy Act of 1974, as amended, pursuant to 5 U.S.C. 552a(m).

5. A record related to an International Application filed under the Patent Cooperation Treaty in this system of records may be disclosed, as a routine use, to the International Bureau of the World Intellectual Property Organization, pursuant to the Patent Cooperation Treaty.

6. A record in this system of records may be disclosed, as a routine use, to another federal agency for purposes of National Security review (35 U.S.C. 181) and for review pursuant to the Atomic Energy Act (42 U.S.C. 218(c)).

7. A record from this system of records may be disclosed, as a routine use, to the Administrator, General Services, or his/her designee, during an inspection of records conducted by GSA as part of that agency's responsibility to recommend improvements in records management practices and programs, under authority of 44 U.S.C. 2904 and 2906. Such disclosure shall be made in accordance with the GSA regulations governing inspection of records for this purpose, and any other relevant (i.e., GSA or Commerce) directive. Such disclosure shall not be used to make determinations about individuals.

8. A record from this system of records may be disclosed, as a routine use, to the public after either publication of the application pursuant to 35 U.S.C. 122(b) or issuance of a patent pursuant to 35 U.S.C. 151. Further, a record may be disclosed, subject to the limitations of 37 CFR 1.14, as a routine use, to the public if the record was filed in an application which became abandoned or in which the proceedings were terminated and which application is referenced by either a published application, an application open to public inspections or an issued patent.

9. A record from this system of records may be disclosed, as a routine use, to a Federal, State, or local law enforcement agency, if the USPTO becomes aware of a violation or potential violation of law or regulation.

UNITED STATES PATENT AND TRADEMARK OFFICE

Commissioner for Patents
United States Patent and Trademark Office
P.O. Box 1450
Alexandria, VA 22313-1450
www.uspto.gov

KAARDAL AND ASSOCIATES PC
ATTN IVAR M KAARDAL
3500 SOUTH FIRST AVENUE CIRCLE SUITE 250
SIOUX FALLS SD 57105-5807

MAILED
DEC 15 2011
OFFICE OF PETITIONS

In re Patent No. 6,145,719	:	
Issue Date: November 14, 2000	:	
Application No. 09/373,205	:	DECISION ON PETITION
Filed: August 12, 1999	:	
Attorney Docket No. 99-0270	:	

This is a decision on the petition under 37 CFR 1.378(c), filed November 10, 2011, to accept the unintentionally delayed payment of a maintenance fee for the above-identified patent.

The petition is **GRANTED**.

This patent expired on November 14, 2008 for failure to pay the seven and one-half year maintenance fee. Since this petition was submitted within twenty-four months after the six-month grace period provided in 37 CFR 1.362(e), the petition was timely filed under the provisions of 37 CFR 1.378(c).

The maintenance fee is hereby accepted and the above-identified patent is reinstated as of the mail date of this decision.

Telephone inquiries concerning this decision should be directed to the undersigned at (571) 272-4231.

The patent file is being forwarded to Files Repository.

/Michelle R. Eason/
Michelle R. Eason
Paralegal Specialist
Office of Petitions

cc: **LOUIS ROBERT**
BOX 683
EARLTON, ONTARIO
CANADA P0J-IE0

UNITED STATES PATENT AND TRADEMARK OFFICE

Commissioner for Patents
United States Patent and Trademark Office
P.O. Box 1450
Alexandria, VA 22313-1450
www.uspto.gov

In re Patent No. 6386761
Issue Date: May 14,2002
Application No. 09374459
Filed: August 13,1999
Attorney Docket No. 065372.0102

:
:DECISION GRANTING PETITION
:UNDER 37 CFR 1.378(c)
:

This is a decision on the electronic petition, filed November 18,2010 ,under 37 CFR 1.378(c) to accept the unintentionally delayed payment of the 7.5 year maintenance fee for the above-identified patent.

The petition is **GRANTED**.

The maintenance fee is accepted, and the above-identified patent reinstated as of November 18,2010 . This decision also constitutes notice that the fee has been accepted. An electronic copy of the petition and this decision has been created as an entry in the Image File Wrapper. Nevertheless, petitioner should print and retain an independent copy.

Telephone inquiries related to this electronic decision should be directed to the Electronic Business Center at 1-866-217-9197.

PTO/SB/66 (03-09)
Approved for use through 03/31/2012. OMB 0651-0016
U.S. Patent and Trademark Office: U.S. DEPARTMENT OF COMMERCE
Under the Paperwork Reduction Act of 1995, no persons are required to respond to a collection of information unless it displays valid OMB control number.

PETITION TO ACCEPT UNINTENTIONALLY DELAYED PAYMENT OF MAINTENANCE FEE IN AN EXPIRED PATENT (37 CFR 1.378(c))

Patent Number	Issue Date (YYYY-MM-DD)	Application Number	Filing Date (YYYY-MM-DD)	Docket Number (if applicable)
6386761	2002-05-14	09374459	1999-08-13	

CAUTION: Maintenance fee (and surcharge, if any) payment must correctly identify: (1) the patent number and (2) the application number of the actual U.S. application leading to issuance of that patent to ensure the fee(s) is/are associated with the correct patent. 37 CFR 1.366(c) and (d).

SMALL ENTITY

☒ Patentee claims, or has previously claimed, small entity status. See 37 CFR 1.27.

LOSS OF ENTITLEMENT TO SMALL ENTITY STATUS

☐ Patentee is no longer entitled to small entity status. See 37 CFR 1.27(g)

NOT Small Entity			Small Entity		
	Fee	Code		Fee	Code
○	3 ½ year	(1551)	○	3 ½ year	(2551)
○	7 ½ year	(1552)	◉	7 ½ year	(2552)
○	11 ½ year	(1553)	○	11 ½ year	(2553)

SURCHARGE

The surcharge required by 37 CFR 1.20(i)(2) (Fee Code 1558) must be paid as a condition of accepting unintentionally delayed payment of the maintenance fee.

MAINTENANCE FEE (37 CFR 1.20(e)-(g))

The appropriate maintenance fee must be submitted with this petition.

STATEMENT

THE UNDERSIGNED CERTIFIES THAT THE DELAY IN PAYMENT OF THE MAINTENANCE FEE TO THIS PATENT WAS UNINTENTIONAL

PETITIONER(S) REQUEST THAT THE DELAYED PAYMENT OF THE MAINTENANCE FEE BE ACCEPTED AND THE PATENT REINSTATED

THIS PORTION MUST BE COMPLETED BY THE SIGNATORY OR SIGNATORIES

37 CFR 1.378(d) states: "Any petition under this section must be signed by an attorney or agent registered to practice before the Patent and Trademark Office, or by the patentee, the assignee, or other party in interest."

I certify, in accordance with 37 CFR 1.4(d)(4) that I am

○ An attorney or agent registered to practice before the Patent and Trademark Office

◉ A sole patentee

○ A joint patentee; I certify that I am authorized to sign this submission on behalf of all the other patentees.

○ A joint patentee; all of whom are signing this e-petition

○ The assignee of record of the entire interest

PTO/SB/66 (03-09)
Approved for use through 03/31/2012. OMB 0651-0016
U.S. Patent and Trademark Office: U.S. DEPARTMENT OF COMMERCE
Under the Paperwork Reduction Act of 1995, no persons are required to respond to a collection of information unless it displays valid OMB control number.

Sole Patentee			
A signature of the applicant or representative is required in accordance with 37 CFR 1.33 and 10.18. Please see 37 CFR 1.4(d) for the form of the signature.			
Signature	/Jennifer L. Bohnsack/	Date (YYYY-MM-DD)	2010-11-18
Name	Jennifer L. Bohnsack		

This collection of information is required by 37 CFR 1.378(c). The information is required to obtain or retain a benefit by the public which is to file (and by the USPTO to process) an application. Confidentiality is governed by 35 U.S.C. 122 and 37 CFR 1.11 and 1.14. This collection is estimated to take 1 hour to complete, including gathering, preparing, and submitting the completed application form to the USPTO. Time will vary depending upon the individual case. Any comments on the amount of time you require to complete this form and/ or suggestions for reducing this burden, should be sent to the Chief Information Officer, U.S. Patent and Trademark Office, U.S. Department of Commerce, P.O. Box 1450, Alexandria, VA 22313-1450. DO NOT SEND FEES OR COMPLETED FORMS TO THIS ADDRESS. **This form can only be used when in conjunction with EFS-Web. If this form is mailed to the USPTO, it may cause delays in reinstating the patent.**

Privacy Act Statement

The Privacy Act of 1974 (P.L. 93-579) requires that you be given certain information in connection with your submission of the attached form related to a patent application or patent. Accordingly, pursuant to the requirements of the Act, please be advised that: (1) the general authority for the collection of this information is 35 U.S.C. 2(b)(2); (2) furnishing of the information solicited is voluntary; and (3) the principal purpose for which the information is used by the U.S. Patent and Trademark Office is to process and/or examine your submission related to a patent application or patent. If you do not furnish the requested information, the U.S. Patent and Trademark Office may not be able to process and/or examine your submission, which may result in termination of proceedings or abandonment of the application or expiration of the patent.

The information provided by you in this form will be subject to the following routine uses:

1. The information on this form will be treated confidentially to the extent allowed under the Freedom of Information Act (5 U.S.C. 552) and the Privacy Act (5 U.S.C. 552a). Records from this system of records may be disclosed to the Department of Justice to determine whether the Freedom of Information Act requires disclosure of these records.

2. A record from this system of records may be disclosed, as a routine use, in the course of presenting evidence to a court, magistrate, or administrative tribunal, including disclosures to opposing counsel in the course of settlement negotiations.

3. A record in this system of records may be disclosed, as a routine use, to a Member of Congress submitting a request involving an individual, to whom the record pertains, when the individual has requested assistance from the Member with respect to the subject matter of the record.

4. A record in this system of records may be disclosed, as a routine use, to a contractor of the Agency having need for the information in order to perform a contract. Recipients of information shall be required to comply with the requirements of the Privacy Act of 1974, as amended, pursuant to 5 U.S.C. 552a(m).

5. A record related to an International Application filed under the Patent Cooperation Treaty in this system of records may be disclosed, as a routine use, to the International Bureau of the World Intellectual Property Organization, pursuant to the Patent Cooperation Treaty.

6. A record in this system of records may be disclosed, as a routine use, to another federal agency for purposes of National Security review (35 U.S.C. 181) and for review pursuant to the Atomic Energy Act (42 U.S.C. 218(c)).

7. A record from this system of records may be disclosed, as a routine use, to the Administrator, General Services, or his/her designee, during an inspection of records conducted by GSA as part of that agency's responsibility to recommend improvements in records management practices and programs, under authority of 44 U.S.C. 2904 and 2906. Such disclosure shall be made in accordance with the GSA regulations governing inspection of records for this purpose, and any other relevant (i.e., GSA or Commerce) directive. Such disclosure shall not be used to make determinations about individuals.

8. A record from this system of records may be disclosed, as a routine use, to the public after either publication of the application pursuant to 35 U.S.C. 122(b) or issuance of a patent pursuant to 35 U.S.C. 151. Further, a record may be disclosed, subject to the limitations of 37 CFR 1.14, as a routine use, to the public if the record was filed in an application which became abandoned or in which the proceedings were terminated and which application is referenced by either a published application, an application open to public inspections or an issued patent.

9. A record from this system of records may be disclosed, as a routine use, to a Federal, State, or local law enforcement agency, if the USPTO becomes aware of a violation or potential violation of law or regulation.

UNITED STATES PATENT AND TRADEMARK OFFICE

Commissioner for Patents
United States Patent and Trademark Office
P.O. Box 1450
Alexandria, VA 22313-1450
www.uspto.gov

ROPES & GRAY LLP
PATENT DOCKETING 39/361
1211 AVENUE OF THE AMERICAS
NEW YORK NY 10036-8704

MAILED

OCT 14 2010

OFFICE OF PETITIONS

In re Application of :
GALLO et al. :
Application No. 09/375,924 : DECISION ON PETITION
Filed: 08/17/1999 :
Attorney Docket No. ABGX-2-CIP :

This is a decision on the petition under 37 CFR 1.181 (no fee), filed June 28, 2005, requesting withdrawal of the holding of abandonment in the above-identified application.

The petition is **GRANTED**.

This application was held abandoned for failure to reply to the final Office action mailed October 18, 2004, which set a three-month shortened statutory period for reply. In the absence of a timely filed reply, the application was held abandoned and a Notice of Abandonment was mailed on June 29, 2005.

Petitioner asserts that final Office action dated October 18, 2004, was not received.

A review of the written record indicates no irregularity in the mailing of the final Office action and in the absence of any irregularity, there is a strong presumption that the Office action was properly mailed to the practitioner at the address of record. This presumption may be overcome by a showing that the final Office action was not in fact received.

As stated in Section 711.03(c)(I)(A) of the Manual for Patent Examining Procedure:

> In Delgar v. Schulyer, 172 USPQ 513 (D.D.C. 1971), the court decided that the Office should mail a new Notice of Allowance in view of the evidence presented in support of the contention that the applicant's representative did not receive the original Notice of Allowance. Under the reasoning of Delgar, an allegation that an Office action was never received may be considered in a petition to withdraw the holding of

abandonment. If adequately supported, the Office may grant the petition to withdraw the holding of abandonment and remail the Office action. That is, the reasoning of Delgar is applicable regardless of whether an application is held abandoned for failure to timely pay the issue fee (35 U.S.C. 151) or for failure to prosecute (35 U.S.C. 133).

To minimize costs and burdens to practitioners and the Office, the Office has modified the showing required to establish nonreceipt of an Office action. The showing required to establish nonreceipt of an Office communication must include a statement from the practitioner describing the system used for recording an Office action received at the correspondence address of record with the USPTO. The statement should establish that the docketing system is sufficiently reliable. It is expected that the record would include, but not be limited to, the application number, attorney docket number, the mail date of the Office action and the due date for the response.

Practitioner must state that the Office action was not received at the correspondence address of record, and that a search of the practitioner's record(s), including any file jacket or the equivalent, and the application contents, indicates that the Office action was not received. A copy of the record(s) used by the practitioner where the non-received Office action would have been entered had it been received is required.

A copy of the practitioner's record(s) required to show non-receipt of the Office action should include the master docket for the firm. That is, if a three month period for reply was set in the nonreceived Office action, a copy of the master docket report showing all replies docketed for a date three months from the mail date of the nonreceived Office action must be submitted as documentary proof of nonreceipt of the Office action. If no such master docket exists, the practitioner should so state and provide other evidence such as, but not limited to, the following: the application file jacket; incoming mail log; calendar; reminder system; or the individual docket record for the application in question.

The showing outlined above may not be sufficient if there are circumstances that point to a conclusion that the Office action may have been lost after receipt rather than a conclusion that the Office action was lost in the mail (e.g., if the practitioner has a history of not receiving Office actions).

After reviewing the documents submitted on petition, the Office concludes that the showing of record is sufficient to warrant withdrawal of the holding of abandonment. The practitioner described the docketing system and the procedures for docketing due dates. The practitioner submitted a copy of a master docket report showing all replies docketed for a date three months from the mail date of the nonreceived Office action. Furthermore, the practitioner attested to the fact that a search of these records indicated that the final Office action was not received at the

correspondence address of record. Accordingly, petitioner presented the required showing under 37 CFR 1.181.

The petition under 37 CFR 1.181 is **GRANTED**. The holding of abandonment is hereby withdrawn. The $130.00 fee submitted with the present petition will be refunded.

Technology Center Art Unit 1644 has been advised of this decision. The matter is being referred to the Technology Center's technical support staff for re-mailing of the final Office action of October 18, 2004. The three-month shortened statutory period to reply to the final Office action will be set to run from the re-mailing date of the Office action.

Telephone inquiries related to this decision may be directed to the undersigned at (571) 272-3211.

C. T. Donnell

Christina Tartera Donnell
Senior Petitions Attorney
Office of Petitions

UNITED STATES PATENT AND TRADEMARK OFFICE

Commissioner for Patents
United States Patent and Trademark Office
P.O. Box 1450
Alexandria, VA 22313-1450
www.uspto.gov

In re Patent No. 6430118
Issue Date: August 6,2002
Application No. 09376780
Filed: August 18,1999
Attorney Docket No. 16289-28

:
:DECISION GRANTING PETITION
:UNDER 37 CFR 1.378(c)
:

This is a decision on the electronic petition, filed October 18,2010 ,under 37 CFR 1.378(c) to accept the unintentionally delayed payment of the 7.5 year maintenance fee for the above-identified patent.

The petition is **GRANTED**.

The maintenance fee is accepted, and the above-identified patent reinstated as of October 18,2010 . This decision also constitutes notice that the fee has been accepted. An electronic copy of the petition and this decision has been created as an entry in the Image File Wrapper. Nevertheless, petitioner should print and retain an independent copy.

Telephone inquiries related to this electronic decision should be directed to the Electronic Business Center at 1-866-217-9197.

PTO/SB/66 (03-09)
Approved for use through 03/31/2012. OMB 0651-0016
U.S. Patent and Trademark Office: U.S. DEPARTMENT OF COMMERCE
Under the Paperwork Reduction Act of 1995, no persons are required to respond to a collection of information unless it displays valid OMB control number.

PETITION TO ACCEPT UNINTENTIONALLY DELAYED PAYMENT OF MAINTENANCE FEE IN AN EXPIRED PATENT (37 CFR 1.378(c))

Patent Number	Issue Date (YYYY-MM-DD)	Application Number	Filing Date (YYYY-MM-DD)	Docket Number (if applicable)
6430118	2002-08-06	09376780	1999-08-18	16289-28

CAUTION: Maintenance fee (and surcharge, if any) payment must correctly identify: (1) the patent number and (2) the application number of the actual U.S. application leading to issuance of that patent to ensure the fee(s) is/are associated with the correct patent. 37 CFR 1.366(c) and (d).

SMALL ENTITY

☐ Patentee claims, or has previously claimed, small entity status. See 37 CFR 1.27.

LOSS OF ENTITLEMENT TO SMALL ENTITY STATUS

☐ Patentee is no longer entitled to small entity status. See 37 CFR 1.27(g)

NOT Small Entity			Small Entity		
	Fee	Code		Fee	Code
○	3 ½ year	(1551)	○	3 ½ year	(2551)
◉	7 ½ year	(1552)	○	7 ½ year	(2552)
○	11 ½ year	(1553)	○	11 ½ year	(2553)

SURCHARGE

The surcharge required by 37 CFR 1.20(i)(2) (Fee Code 1558) must be paid as a condition of accepting unintentionally delayed payment of the maintenance fee.

MAINTENANCE FEE (37 CFR 1.20(e)-(g))

The appropriate maintenance fee must be submitted with this petition.

STATEMENT

THE UNDERSIGNED CERTIFIES THAT THE DELAY IN PAYMENT OF THE MAINTENANCE FEE TO THIS PATENT WAS UNINTENTIONAL

PETITIONER(S) REQUEST THAT THE DELAYED PAYMENT OF THE MAINTENANCE FEE BE ACCEPTED AND THE PATENT REINSTATED

THIS PORTION MUST BE COMPLETED BY THE SIGNATORY OR SIGNATORIES

37 CFR 1.378(d) states: "Any petition under this section must be signed by an attorney or agent registered to practice before the Patent and Trademark Office, or by the patentee, the assignee, or other party in interest."

I certify, in accordance with 37 CFR 1.4(d)(4) that I am

◉ An attorney or agent registered to practice before the Patent and Trademark Office

○ A sole patentee

○ A joint patentee; I certify that I am authorized to sign this submission on behalf of all the other patentees.

○ A joint patentee; all of whom are signing this e-petition

○ The assignee of record of the entire interest

PTO/SB/66 (03-09)
Approved for use through 03/31/2012. OMB 0651-0016
U.S. Patent and Trademark Office: U.S. DEPARTMENT OF COMMERCE
Under the Paperwork Reduction Act of 1995, no persons are required to respond to a collection of information unless it displays valid OMB control number.

Patent Practitioner			
A signature of the applicant or representative is required in accordance with 37 CFR 1.33 and 10.18. Please see 37 CFR 1.4(d) for the form of the signature			
Signature	/Kendal M. Sheets/	Date (YYYY-MM-DD)	2010-10-15
Name	Kendal M. Sheets	Registration Number	47077

This collection of information is required by 37 CFR 1.378(c). The information is required to obtain or retain a benefit by the public which is to file (and by the USPTO to process) an application. Confidentiality is governed by 35 U.S.C. 122 and 37 CFR 1.11 and 1.14. This collection is estimated to take 1 hour to complete, including gathering, preparing, and submitting the completed application form to the USPTO. Time will vary depending upon the individual case. Any comments on the amount of time you require to complete this form and/ or suggestions for reducing this burden, should be sent to the Chief Information Officer, U.S. Patent and Trademark Office, U.S. Department of Commerce, P.O. Box 1450, Alexandria, VA 22313-1450. DO NOT SEND FEES OR COMPLETED FORMS TO THIS ADDRESS. **This form can only be used when in conjunction with EFS-Web. If this form is mailed to the USPTO, it may cause delays in reinstating the patent.**

Privacy Act Statement

The Privacy Act of 1974 (P.L. 93-579) requires that you be given certain information in connection with your submission of the attached form related to a patent application or patent. Accordingly, pursuant to the requirements of the Act, please be advised that: (1) the general authority for the collection of this information is 35 U.S.C. 2(b)(2); (2) furnishing of the information solicited is voluntary; and (3) the principal purpose for which the information is used by the U.S. Patent and Trademark Office is to process and/or examine your submission related to a patent application or patent. If you do not furnish the requested information, the U.S. Patent and Trademark Office may not be able to process and/or examine your submission, which may result in termination of proceedings or abandonment of the application or expiration of the patent.

The information provided by you in this form will be subject to the following routine uses:

1. The information on this form will be treated confidentially to the extent allowed under the Freedom of Information Act (5 U.S.C. 552) and the Privacy Act (5 U.S.C. 552a). Records from this system of records may be disclosed to the Department of Justice to determine whether the Freedom of Information Act requires disclosure of these records.

2. A record from this system of records may be disclosed, as a routine use, in the course of presenting evidence to a court, magistrate, or administrative tribunal, including disclosures to opposing counsel in the course of settlement negotiations.

3. A record in this system of records may be disclosed, as a routine use, to a Member of Congress submitting a request involving an individual, to whom the record pertains, when the individual has requested assistance from the Member with respect to the subject matter of the record.

4. A record in this system of records may be disclosed, as a routine use, to a contractor of the Agency having need for the information in order to perform a contract. Recipients of information shall be required to comply with the requirements of the Privacy Act of 1974, as amended, pursuant to 5 U.S.C. 552a(m).

5. A record related to an International Application filed under the Patent Cooperation Treaty in this system of records may be disclosed, as a routine use, to the International Bureau of the World Intellectual Property Organization, pursuant to the Patent Cooperation Treaty.

6. A record in this system of records may be disclosed, as a routine use, to another federal agency for purposes of National Security review (35 U.S.C. 181) and for review pursuant to the Atomic Energy Act (42 U.S.C. 218(c)).

7. A record from this system of records may be disclosed, as a routine use, to the Administrator, General Services, or his/her designee, during an inspection of records conducted by GSA as part of that agency's responsibility to recommend improvements in records management practices and programs, under authority of 44 U.S.C. 2904 and 2906. Such disclosure shall be made in accordance with the GSA regulations governing inspection of records for this purpose, and any other relevant (i.e., GSA or Commerce) directive. Such disclosure shall not be used to make determinations about individuals.

8. A record from this system of records may be disclosed, as a routine use, to the public after either publication of the application pursuant to 35 U.S.C. 122(b) or issuance of a patent pursuant to 35 U.S.C. 151. Further, a record may be disclosed, subject to the limitations of 37 CFR 1.14, as a routine use, to the public if the record was filed in an application which became abandoned or in which the proceedings were terminated and which application is referenced by either a published application, an application open to public inspections or an issued patent.

9. A record from this system of records may be disclosed, as a routine use, to a Federal, State, or local law enforcement agency, if the USPTO becomes aware of a violation or potential violation of law or regulation.

UNITED STATES PATENT AND TRADEMARK OFFICE

Commissioner for Patents
United States Patent and Trademark Office
P.O. Box 1450
Alexandria, VA 22313-1450
www.uspto.gov

MINTZ, LEVIN, COHN, FERRIS, GLOVSKY AND POPEO, P.C
ONE FINANCIAL CENTER
BOSTON MA 02111

MAILED

SEP 10 2010

OFFICE OF PETITIONS

In re Patent No. 6,777,388 :
Application No. 09/377,081 :
Filed: August 19, 1999 : ON PETITION
Issued: August 17, 2004 :
Attorney Docket No. 19705-001-(A :

This is a decision on the petition filed July 7, 2010, which is being treated as a request under 37 CFR 3.81(b)[1] to correct the name of the assignee on the front page of the above-identified patent by way of a Certificate of Correction.

The request is **GRANTED**.

This matter is being referred to the Certificates of Correction Branch for issuance of the requested Certificate of Correction.

Additionally, 37 CFR 3.81 (b) also requires payment of the $100.00 Certificate of Correction fee, which will be charged to petitioner's deposit account as authorized July 7, 2010.

Further, it is not apparent whether the person signing the request was ever given a power of attorney or authorization of agent regarding the above-identified patent. However, in accordance with 37 CFR 1.34(a), the signature appearing on the request shall constitute a representation to the United States Patent and Trademark Office that he/she is authorized to represent the particular party in whose behalf he/she acts.

Telephone inquiries concerning this decision may be directed to the undersigned at (571) 272-7751. Inquiries regarding the issuance of a certificate of correction should be directed to the Certificate of Correction Branch at (571) 272-4200.

Joan Olszewski
Petitions Examiner
Office of Petitions

[1] *See* MPEP 1309, subsection II; and Official Gazette of June 22, 2004.

UNITED STATES PATENT AND TRADEMARK OFFICE

Commissioner for Patents
United States Patent and Trademark Office
P.O. Box 1450
Alexandria, VA 22313-1450
www.uspto.gov

Paper No. 10

PETER MELE
PO BOX 533
1505 WHITE CHURCH RD
CROWN POINT NY 12928

MAILED
SEP 30 2010
OFFICE OF PETITIONS

In re Patent No. 6,338,210 :
Issue Date: January 15, 2002 :
Application No. 09/377,929 : DECISION ON PETITION
Filed: August 20, 1999 :
Title: Removal of Accumulated Material :
:

This is a decision on the "PETITION TO ACCEPT PREVIOUS PAYMENT OF MAINTENANCE FEE", filed July 12, 2010, which is properly treated as a petition under 37 CFR 1.377.

The petition is **DISMISSED**.

Patentee is given TWO (2) MONTHS to file a request for reconsideration of this decision under 37 CFR 1.377. Any such request for reconsideration should be accompanied by the $70 balance for the fee set forth below, and should include a cover letter entitled "REQUEST FOR RECONSIDERATION UNDER 37 CFR 1.377".

The above-identified patent issued on January 15, 2002. Therefore, the window for paying the second maintenance fee extended from January 15, 2009 to July 15, 2009 without surcharge, and from July 16, 2009 to January 15, 2010, with surcharge. No maintenance fee and surcharge having been received in full on or before January 15, 2010, the patent expired on January 16, 2010.

37 CFR 1.377 states, in pertinent part, that a "patentee who is dissatisfied with the refusal of the Patent and Trademark Office to accept and record a maintenance fee which was filed prior to the expiration of the patent may petition the Commissioner to accept and

record the maintenance fee."[1] The petition "must be filed within 2 months of the action complained of", and **must be accompanied by a $200 fee**. However, the petition may include a request that the fee be refunded if the refusal to accept and record the maintenance fee is determined to have resulted from an error by the Patent and Trademark Office.[2]

Here, petitioner has not submitted the $200 fee required for consideration of the petition. Instead, petitioner submitted $130, together with $1305 (for the $1240 maintenance fee and $65 surcharge). Accordingly, on request for reconsideration under 37 CFR 1.377, petitioner will need to submit the $70 balance due.

If petitioner can not offer proof that he timely filed the maintenance fee and surcharge in full, **to the correct address**, prior to the expiration date of the patent, petitioner may seek to reinstate the expired patent pursuant to either 37 CFR 1.378(b) (unavoidable delay) or 37 CFR 1.378(c) (unintentional delay). Forms for both petitions are enclosed for petitioner's convenience.

Receipt of the $1,240 maintenance fee and $65 surcharge, submitted with the instant petition, is acknowledged. However, until such time as patentee files a grantable petition under 37 CFR 1.377 or 37 CFR 1.378(b) or 1.378(c), the patent remains expired.

Further correspondence should be addressed as follows:

By mail: Mail Stop Petitions
Commissioner for Patents
P.O. Box 1450
Alexandria VA 22313-1450

By FAX: (571)273-8300
Attn: Office of Petitions

Telephone inquiries concerning this matter may be directed to the undersigned at (571)272-3207.

Cliff Congo
Petitions Attorney
Office of Petitions

Enc: PTO/SB/66 (3 pages)
PTO/SB/65 (4 pages)
Privacy Act Statement (1 page)

---

[1] 37 CFR 1.377(a). Emphasis added.

[2] See 37 CFR 1.377(b).

UNITED STATES PATENT AND TRADEMARK OFFICE

Commissioner for Patents
United States Patent and Trademark Office
P.O. Box 1450
Alexandria, VA 22313-1450
www.uspto.gov

Paper No. 12

PETER MELE
PO BOX 533
1505 WHITE CHURCH RD
CROWN POINT NY 12928

MAILED
FEB 28 2011
OFFICE OF PETITIONS

In re Patent No. 6,338,210 :
Issue Date: January 15, 2002 :
Application No. 09/377,929 : DECISION ON PETITION
Filed: August 20, 1999 :
Title: Removal of Accumulated Material :
:

This is a decision on the "REQUEST FOR RECONSIDERATION UNDER 37 CFR 1.377", filed December 6, 2010.

The petition is **DISMISSED**.

Patentee is given TWO (2) MONTHS to file a request for reconsideration of this decision under 37 CFR 1.377. Any such request for reconsideration should be accompanied by the $70 balance for the fee set forth below, and should include a cover letter entitled "REQUEST FOR RECONSIDERATION UNDER 37 CFR 1.377".

The above-identified patent issued on January 15, 2002. Therefore, the window for paying the second maintenance fee extended from January 15, 2009 to July 15, 2009 without surcharge, and from July 16, 2009 to January 15, 2010, with surcharge. No maintenance fee and surcharge having been received in full on or before January 15, 2010, the patent expired on January 16, 2010. Patentee filed a petition under 37 CFR 1.377 on July 12, 2010. However, the petition was dismissed in a decision mailed on September 30, 2010. The petition was dismissed without being considered on the merits because the petition did not include the petition fee in full.

With the instant request for reconsideration, petitioner has submitted the balance of the petition fee due. Accordingly, consideration of the petition is made below.

37 CFR 1.377 states, in pertinent part, that a "patentee who is dissatisfied with the refusal of the Patent and Trademark Office to accept and record a maintenance fee which was filed prior to the expiration of the patent may petition the Commissioner to accept and record the maintenance fee."[1]

Here, petitioner states that he timely mailed the maintenance fee on October 8, 2009. As evidence thereof, petition has included a copy of an envelope addressed to "US Patent & Trademark Office, PO Box 371611, Pittsburgh, PA, 15250-1611".

Beginning on August 27, 2007, the address for mailing maintenance fees was changed to "US Patent and Trademark Office, PO Box 979070, St. Louis, MO, 63197-9000". Furthermore, the Office continued receiving payments at the Pittsburgh address up until November 21, 2007. See New Mailing Address for Submitting Patent Maintenance Fee Payments, Official Gazette Notice (August 28, 2007).

In view of the above, petitioner has not established that he timely mailed the maintenance fee to the proper address. Petitioner may seek to reinstate the expired patent pursuant to either 37 CFR 1.378(b) (unavoidable delay) or 37 CFR 1.378(c) (unintentional delay). Forms for both petitions are enclosed for petitioner's convenience.

Further correspondence should be addressed as follows:

By mail: Mail Stop Petitions
Commissioner for Patents
P.O. Box 1450
Alexandria VA 22313-1450

By FAX: (571)273-8300
Attn: Office of Petitions

Telephone inquiries concerning this matter may be directed to the undersigned at (571)272-3207.

Cliff Congo
Petitions Attorney
Office of Petitions

Enc: PTO/SB/66 (3 pages)
PTO/SB/65 (4 pages)
Privacy Act Statement (1 page)

---

[1] 37 CFR 1.377(a).

UNITED STATES PATENT AND TRADEMARK OFFICE

Commissioner for Patents
United States Patent and Trademark Office
P.O. Box 1450
Alexandria, VA 22313-1450
www.uspto.gov

PETER MELE
PO BOX 533
1505 WHITE CHURCH RD
CROWN POINT NY 12928

MAILED
MAY 23 2011
OFFICE OF PETITIONS

In re Patent No. 6,338,210 :
Issue Date: January 15, 2002 :
Application No. 09/377,929 : DECISION ON PETITION
Filed: August 20, 1999 :
Title: Removal of Accumulated Material :
:

This is a decision on the "RENEWED REQUEST FOR RECONSIDERATION UNDER 37 CFR 1.377", filed May 2, 2011.

The petition is **DISMISSED**.

Patentee is given TWO (2) MONTHS to file a request for reconsideration of this decision under 37 CFR 1.377. Any such request for reconsideration should be include a cover letter entitled "REQUEST FOR RECONSIDERATION UNDER 37 CFR 1.377".

The above-identified patent issued on January 15, 2002. Therefore, the window for paying the second maintenance fee extended from January 15, 2009 to July 15, 2009 without surcharge, and from July 16, 2009 to January 15, 2010, with surcharge. No maintenance fee and surcharge having been received in full on or before January 15, 2010, the patent expired on January 16, 2010. Patentee filed a petition under 37 CFR 1.377 on July 12, 2010. However, the petition was dismissed in a decision mailed on September 30, 2010. The petition was dismissed without being considered on the merits because the petition did not include the petition fee in full.

Patentee filed a renewed petition on December 6, 2010, this time including the balance of the petition fee. However, the petition was dismissed in a decision mailed on February 28, 2011. The petition was dismissed because petitioner did not establish that he mailed the

maintenance fee to the correct address. Rather, petitioner mailed the maintenance fee to an old address on October 8, 2009. However, that address stopped discontinued receiving maintenance fees effective November 21, 2007.

With the instant request for reconsideration, petitioner argues that the Post Office did not return his maintenance fee until April 8, 2010. According to petitioner, had the US Post Office timely returned his maintenance fee, petitioner could have timely resubmitted the maintenance fee to the correct address.

Petitioner's argument has been considered, but is not persuasive. 37 CFR 1.377 requires a showing that petitioner timely and properly mailed the maintenance fee. Here, petitioner admits that he did not mail the maintenance fee to the proper address. Rather, petitioner's argument seems to address the cause of the delay at issue (i.e. whether the delay was unintentional and/or unavoidable). Such an argument should be addressed by filing a petition to reinstate the expired patent pursuant to either 37 CFR 1.378(b) (unavoidable delay) or 37 CFR 1.378(c) (unintentional delay). Forms for both petitions are enclosed for petitioner's convenience.

Further correspondence should be addressed as follows:

By mail: Mail Stop Petitions
Commissioner for Patents
P.O. Box 1450
Alexandria VA 22313-1450

By FAX: (571)273-8300
Attn: Office of Petitions

Telephone inquiries concerning this matter may be directed to the undersigned at (571)272-3207.

Cliff Congo
Petitions Attorney
Office of Petitions

Enc: PTO/SB/66 (3 pages)
PTO/SB/65 (4 pages)
Privacy Act Statement (1 page)

UNITED STATES PATENT AND TRADEMARK OFFICE

Commissioner for Patents
United States Patent and Trademark Office
P.O. Box 1450
Alexandria, VA 22313-1450
www.uspto.gov

In re Patent No. 6238024
Issue Date: May 29,2001
Application No. 09378008
Filed: August 19,1999
Attorney Docket No. 10967.83346

:
:DECISION GRANTING PETITION
:UNDER 37 CFR 1.378(c)
:

This is a decision on the electronic petition, filed May 11,2011 ,under 37 CFR 1.378(c) to accept the unintentionally delayed payment of the 7.5 year maintenance fee for the above-identified patent.

The petition is **GRANTED**.

The maintenance fee is accepted, and the above-identified patent reinstated as of May 11,2011 .
This decision also constitutes notice that the fee has been accepted. An electronic copy of the petition and this decision has been created as an entry in the Image File Wrapper. Nevertheless, petitioner should print and retain an independent copy.

Telephone inquiries related to this electronic decision should be directed to the Electronic Business Center at 1-866-217-9197.

PTO/SB/66 (03-09)
Approved for use through 03/31/2012. OMB 0651-0016
U.S. Patent and Trademark Office: U.S. DEPARTMENT OF COMMERCE
Under the Paperwork Reduction Act of 1995, no persons are required to respond to a collection of information unless it displays valid OMB control number.

PETITION TO ACCEPT UNINTENTIONALLY DELAYED PAYMENT OF MAINTENANCE FEE IN AN EXPIRED PATENT (37 CFR 1.378(c))

Patent Number	Issue Date (YYYY-MM-DD)	Application Number	Filing Date (YYYY-MM-DD)	Docket Number (if applicable)
6238024	2001-05-29	09378008	1999-08-19	010967.83346

CAUTION: Maintenance fee (and surcharge, if any) payment must correctly identify: (1) the patent number and (2) the application number of the actual U.S. application leading to issuance of that patent to ensure the fee(s) is/are associated with the correct patent. 37 CFR 1.366(c) and (d).

SMALL ENTITY

☐ Patentee claims, or has previously claimed, small entity status. See 37 CFR 1.27.

LOSS OF ENTITLEMENT TO SMALL ENTITY STATUS

☐ Patentee is no longer entitled to small entity status. See 37 CFR 1.27(g)

NOT Small Entity	Fee	Code	Small Entity	Fee	Code
○	3 ½ year	(1551)	○	3 ½ year	(2551)
◉	7 ½ year	(1552)	○	7 ½ year	(2552)
○	11 ½ year	(1553)	○	11 ½ year	(2553)

SURCHARGE

The surcharge required by 37 CFR 1.20(i)(2) (Fee Code 1558) must be paid as a condition of accepting unintentionally delayed payment of the maintenance fee.

MAINTENANCE FEE (37 CFR 1.20(e)-(g))

The appropriate maintenance fee must be submitted with this petition.

STATEMENT

THE UNDERSIGNED CERTIFIES THAT THE DELAY IN PAYMENT OF THE MAINTENANCE FEE TO THIS PATENT WAS UNINTENTIONAL

PETITIONER(S) REQUEST THAT THE DELAYED PAYMENT OF THE MAINTENANCE FEE BE ACCEPTED AND THE PATENT REINSTATED

THIS PORTION MUST BE COMPLETED BY THE SIGNATORY OR SIGNATORIES

37 CFR 1.378(d) states: "Any petition under this section must be signed by an attorney or agent registered to practice before the Patent and Trademark Office, or by the patentee, the assignee, or other party in interest."

I certify, in accordance with 37 CFR 1.4(d)(4) that I am

◉ An attorney or agent registered to practice before the Patent and Trademark Office

○ A sole patentee

○ A joint patentee; I certify that I am authorized to sign this submission on behalf of all the other patentees.

○ A joint patentee; all of whom are signing this e-petition

○ The assignee of record of the entire interest

PTO/SB/66 (03-09)
Approved for use through 03/31/2012. OMB 0651-0016
U.S. Patent and Trademark Office: U.S. DEPARTMENT OF COMMERCE
Under the Paperwork Reduction Act of 1995, no persons are required to respond to a collection of information unless it displays valid OMB control number.

Patent Practitioner			
A signature of the applicant or representative is required in accordance with 37 CFR 1.33 and 10.18. Please see 37 CFR 1.4(d) for the form of the signature			
Signature	/Jon O. Nelson/	Date (YYYY-MM-DD)	2011-05-11
Name	Jon O. Nelson	Registration Number	24566

This collection of information is required by 37 CFR 1.378(c). The information is required to obtain or retain a benefit by the public which is to file (and by the USPTO to process) an application. Confidentiality is governed by 35 U.S.C. 122 and 37 CFR 1.11 and 1.14. This collection is estimated to take 1 hour to complete, including gathering, preparing, and submitting the completed application form to the USPTO. Time will vary depending upon the individual case. Any comments on the amount of time you require to complete this form and/ or suggestions for reducing this burden, should be sent to the Chief Information Officer, U.S. Patent and Trademark Office, U.S. Department of Commerce, P.O. Box 1450, Alexandria, VA 22313-1450. DO NOT SEND FEES OR COMPLETED FORMS TO THIS ADDRESS. **This form can only be used when in conjunction with EFS-Web. If this form is mailed to the USPTO, it may cause delays in reinstating the patent.**

Privacy Act Statement

The Privacy Act of 1974 (P.L. 93-579) requires that you be given certain information in connection with your submission of the attached form related to a patent application or patent. Accordingly, pursuant to the requirements of the Act, please be advised that: (1) the general authority for the collection of this information is 35 U.S.C. 2(b)(2); (2) furnishing of the information solicited is voluntary; and (3) the principal purpose for which the information is used by the U.S. Patent and Trademark Office is to process and/or examine your submission related to a patent application or patent. If you do not furnish the requested information, the U.S. Patent and Trademark Office may not be able to process and/or examine your submission, which may result in termination of proceedings or abandonment of the application or expiration of the patent.

The information provided by you in this form will be subject to the following routine uses:

1. The information on this form will be treated confidentially to the extent allowed under the Freedom of Information Act (5 U.S.C. 552) and the Privacy Act (5 U.S.C. 552a). Records from this system of records may be disclosed to the Department of Justice to determine whether the Freedom of Information Act requires disclosure of these records.

2. A record from this system of records may be disclosed, as a routine use, in the course of presenting evidence to a court, magistrate, or administrative tribunal, including disclosures to opposing counsel in the course of settlement negotiations.

3. A record in this system of records may be disclosed, as a routine use, to a Member of Congress submitting a request involving an individual, to whom the record pertains, when the individual has requested assistance from the Member with respect to the subject matter of the record.

4. A record in this system of records may be disclosed, as a routine use, to a contractor of the Agency having need for the information in order to perform a contract. Recipients of information shall be required to comply with the requirements of the Privacy Act of 1974, as amended, pursuant to 5 U.S.C. 552a(m).

5. A record related to an International Application filed under the Patent Cooperation Treaty in this system of records may be disclosed, as a routine use, to the International Bureau of the World Intellectual Property Organization, pursuant to the Patent Cooperation Treaty.

6. A record in this system of records may be disclosed, as a routine use, to another federal agency for purposes of National Security review (35 U.S.C. 181) and for review pursuant to the Atomic Energy Act (42 U.S.C. 218(c)).

7. A record from this system of records may be disclosed, as a routine use, to the Administrator, General Services, or his/her designee, during an inspection of records conducted by GSA as part of that agency's responsibility to recommend improvements in records management practices and programs, under authority of 44 U.S.C. 2904 and 2906. Such disclosure shall be made in accordance with the GSA regulations governing inspection of records for this purpose, and any other relevant (i.e., GSA or Commerce) directive. Such disclosure shall not be used to make determinations about individuals.

8. A record from this system of records may be disclosed, as a routine use, to the public after either publication of the application pursuant to 35 U.S.C. 122(b) or issuance of a patent pursuant to 35 U.S.C. 151. Further, a record may be disclosed, subject to the limitations of 37 CFR 1.14, as a routine use, to the public if the record was filed in an application which became abandoned or in which the proceedings were terminated and which application is referenced by either a published application, an application open to public inspections or an issued patent.

9. A record from this system of records may be disclosed, as a routine use, to a Federal, State, or local law enforcement agency, if the USPTO becomes aware of a violation or potential violation of law or regulation.

UNITED STATES PATENT AND TRADEMARK OFFICE

Commissioner for Patents
United States Patent and Trademark Office
P.O. Box 1450
Alexandria, VA 22313-1450
www.uspto.gov

MAILED

APR 26 2011

OFFICE OF PETITIONS

HOWISON & ARNOTT, L.L.P
P.O. BOX 741715
DALLAS TX 75374-1715

In re Patent No. 6,615,268 :
Issue Date: September 2, 2003 :
Application No. 09/378,215 : NOTICE
Filed: August 19, 1999 :
Attorney Docket No. RPXC – 24,708 :

This is a notice regarding your request for acceptance of a fee deficiency submission under 37 CFR 1.28 filed March 25, 2011. On September 1, 1998, the Court of Appeals for the Federal Circuit held that 37 CFR 1.28(c) is the sole provision governing the time for correction of the erroneous payment of the issue fee as a small entity. **See DH Technology v. Synergystex International, Inc. 154 F.3d 1333, 47 USPQ2d 1865 (Fed. Cir. Sept. 1, 1998).**

The Office no longer investigates or rejects original or reissue applications under 37 CFR 1.56. **1098 Off. Gaz. Pat. Office 502 (January 3, 1989)**. Therefore, nothing in this Notice is intended to imply that an investigation was done.

Your fee deficiency submission under 37 CFR 1.28 is hereby accepted. The petition is **GRANTED**.

This application is no longer entitled to small entity status. Accordingly, all future fees paid in this application must be paid at the large entity rate.

This file is being forwarded to Files Repository.

Telephone inquiries related to this decision should be directed to the Kimberly Inabinet at (571) 272-4618.

/Kimberly Inabinet/
Kimberly Inabinet
Petitions Examiner
Office of Petitions

UNITED STATES PATENT AND TRADEMARK OFFICE

Commissioner for Patents
United States Patent and Trademark Office
P.O. Box 1450
Alexandria, VA 22313-1450
www.uspto.gov

MAILED

JUN 14 2011

OFFICE OF PETITIONS

HOWISON & ARNOTT, L.L.P
P.O. BOX 741715
DALLAS, TX 75374-1715

In re Patent No. 6,629,133	:	
Issued: September 30, 2003	:	
Application No. 09/378,219	:	NOTICE
Filed: August 19, 1999	:	
Attorney Docket No.: RPXC - 24,668	:	

This is a notice regarding your request for acceptance of a fee deficiency submission under 37 CFR 1.28.

The Office no longer investigates or rejects original or reissue patent under 37 CFR 1.56. **1098 Off. Gaz. Pat. Office 502 (January 3, 1989)**. Therefore, nothing in this Notice is intended to imply that an investigation was done.

Your fee deficiency submission under 37 CFR 1.28 is hereby **ACCEPTED**.

This patent is no longer entitled to small entity status. Accordingly, all future fees paid in this patent must be paid at the large entity rate.

/SDB/

Sherry D. Brinkley
Petitions Examiner
Office of Petitions

UNITED STATES PATENT AND TRADEMARK OFFICE

Commissioner for Patents
United States Patent and Trademark Office
P.O. Box 1450
Alexandria, VA 22313-1450
www.uspto.gov

In re Patent No. 6371935
Issue Date: April 16,2002
Application No. 09378676
Filed: August 20,1999
Attorney Docket No. CARDE.52347

:
:DECISION GRANTING PETITION
:UNDER 37 CFR 1.378(c)
:

This is a decision on the electronic petition, filed March 8,2012 ,under 37 CFR 1.378(c) to accept the unintentionally delayed payment of the 7.5 year maintenance fee for the above-identified patent.

The petition is **GRANTED**.

The maintenance fee is accepted, and the above-identified patent reinstated as of March 8,2012 . This decision also constitutes notice that the fee has been accepted. An electronic copy of the petition and this decision has been created as an entry in the Image File Wrapper. Nevertheless, petitioner should print and retain an independent copy.

Telephone inquiries related to this electronic decision should be directed to the Electronic Business Center at 1-866-217-9197.

PTO/SB/66 (03-09)
Approved for use through 03/31/2012. OMB 0651-0016
U.S. Patent and Trademark Office: U.S. DEPARTMENT OF COMMERCE
Under the Paperwork Reduction Act of 1995, no persons are required to respond to a collection of information unless it displays valid OMB control number.

PETITION TO ACCEPT UNINTENTIONALLY DELAYED PAYMENT OF MAINTENANCE FEE IN AN EXPIRED PATENT (37 CFR 1.378(c))

Patent Number	Issue Date (YYYY-MM-DD)	Application Number	Filing Date (YYYY-MM-DD)	Docket Number (if applicable)
6371935	2002-04-16	09378676	1999-08-20	71723-5002

CAUTION: Maintenance fee (and surcharge, if any) payment must correctly identify: (1) the patent number and (2) the application number of the actual U.S. application leading to issuance of that patent to ensure the fee(s) is/are associated with the correct patent. 37 CFR 1.366(c) and (d).

SMALL ENTITY

☒ Patentee claims, or has previously claimed, small entity status. See 37 CFR 1.27.

LOSS OF ENTITLEMENT TO SMALL ENTITY STATUS

☐ Patentee is no longer entitled to small entity status. See 37 CFR 1.27(g)

NOT Small Entity	Fee	Code	Small Entity	Fee	Code
○	3 ½ year	(1551)	○	3 ½ year	(2551)
○	7 ½ year	(1552)	◉	7 ½ year	(2552)
○	11 ½ year	(1553)	○	11 ½ year	(2553)

SURCHARGE

The surcharge required by 37 CFR 1.20(i)(2) (Fee Code 1558) must be paid as a condition of accepting unintentionally delayed payment of the maintenance fee.

MAINTENANCE FEE (37 CFR 1.20(e)-(g))

The appropriate maintenance fee must be submitted with this petition.

STATEMENT

THE UNDERSIGNED CERTIFIES THAT THE DELAY IN PAYMENT OF THE MAINTENANCE FEE TO THIS PATENT WAS UNINTENTIONAL

PETITIONER(S) REQUEST THAT THE DELAYED PAYMENT OF THE MAINTENANCE FEE BE ACCEPTED AND THE PATENT REINSTATED

THIS PORTION MUST BE COMPLETED BY THE SIGNATORY OR SIGNATORIES

37 CFR 1.378(d) states: "Any petition under this section must be signed by an attorney or agent registered to practice before the Patent and Trademark Office, or by the patentee, the assignee, or other party in interest."

I certify, in accordance with 37 CFR 1.4(d)(4) that I am

○ An attorney or agent registered to practice before the Patent and Trademark Office

○ A sole patentee

○ A joint patentee; I certify that I am authorized to sign this submission on behalf of all the other patentees.

○ A joint patentee; all of whom are signing this e-petition

◉ The assignee of record of the entire interest

PTO/SB/66 (03-09)
Approved for use through 03/31/2012. OMB 0651-0016
U.S. Patent and Trademark Office: U.S. DEPARTMENT OF COMMERCE
Under the Paperwork Reduction Act of 1995, no persons are required to respond to a collection of information unless it displays valid OMB control number.

The Assignee of record of the entire interest			
Under 37 CFR 3.71 an assignee becomes of record by filing a statement in compliance with 37 CFR 3.73(b). Signature requirements are set forth in 37 CFR 1.4(d), and the undersigned certifies that he / she is empowered to act on behalf of the assignee of the entire interest			
Signature	/Wilfred J. Samson/	Date (YYYY-MM-DD)	2012-03-01
Name	Wilfred J. Samson		
Enter Reel and Frame Number		Remove	
Reel Number	010369	Frame Number	0800
Enter Reel and Frame Number		Remove	
Reel Number	013718	Frame Number	0555
Enter Reel and Frame Number		Remove	
Reel Number	027119	Frame Number	0089
Click ADD for additional Reel Number and Frame Number		Add	

This collection of information is required by 37 CFR 1.378(c). The information is required to obtain or retain a benefit by the public which is to file (and by the USPTO to process) an application. Confidentiality is governed by 35 U.S.C. 122 and 37 CFR 1.11 and 1.14. This collection is estimated to take 1 hour to complete, including gathering, preparing, and submitting the completed application form to the USPTO. Time will vary depending upon the individual case. Any comments on the amount of time you require to complete this form and/or suggestions for reducing this burden, should be sent to the Chief Information Officer, U.S. Patent and Trademark Office, U.S. Department of Commerce, P.O. Box 1450, Alexandria, VA 22313-1450. DO NOT SEND FEES OR COMPLETED FORMS TO THIS ADDRESS. **This form can only be used when in conjunction with EFS-Web. If this form is mailed to the USPTO, it may cause delays in reinstating the patent.**

Privacy Act Statement

The Privacy Act of 1974 (P.L. 93-579) requires that you be given certain information in connection with your submission of the attached form related to a patent application or patent. Accordingly, pursuant to the requirements of the Act, please be advised that: (1) the general authority for the collection of this information is 35 U.S.C. 2(b)(2); (2) furnishing of the information solicited is voluntary; and (3) the principal purpose for which the information is used by the U.S. Patent and Trademark Office is to process and/or examine your submission related to a patent application or patent. If you do not furnish the requested information, the U.S. Patent and Trademark Office may not be able to process and/or examine your submission, which may result in termination of proceedings or abandonment of the application or expiration of the patent.

The information provided by you in this form will be subject to the following routine uses:

1. The information on this form will be treated confidentially to the extent allowed under the Freedom of Information Act (5 U.S.C. 552) and the Privacy Act (5 U.S.C. 552a). Records from this system of records may be disclosed to the Department of Justice to determine whether the Freedom of Information Act requires disclosure of these records.

2. A record from this system of records may be disclosed, as a routine use, in the course of presenting evidence to a court, magistrate, or administrative tribunal, including disclosures to opposing counsel in the course of settlement negotiations.

3. A record in this system of records may be disclosed, as a routine use, to a Member of Congress submitting a request involving an individual, to whom the record pertains, when the individual has requested assistance from the Member with respect to the subject matter of the record.

4. A record in this system of records may be disclosed, as a routine use, to a contractor of the Agency having need for the information in order to perform a contract. Recipients of information shall be required to comply with the requirements of the Privacy Act of 1974, as amended, pursuant to 5 U.S.C. 552a(m).

5. A record related to an International Application filed under the Patent Cooperation Treaty in this system of records may be disclosed, as a routine use, to the International Bureau of the World Intellectual Property Organization, pursuant to the Patent Cooperation Treaty.

6. A record in this system of records may be disclosed, as a routine use, to another federal agency for purposes of National Security review (35 U.S.C. 181) and for review pursuant to the Atomic Energy Act (42 U.S.C. 218(c)).

7. A record from this system of records may be disclosed, as a routine use, to the Administrator, General Services, or his/her designee, during an inspection of records conducted by GSA as part of that agency's responsibility to recommend improvements in records management practices and programs, under authority of 44 U.S.C. 2904 and 2906. Such disclosure shall be made in accordance with the GSA regulations governing inspection of records for this purpose, and any other relevant (i.e., GSA or Commerce) directive. Such disclosure shall not be used to make determinations about individuals.

8. A record from this system of records may be disclosed, as a routine use, to the public after either publication of the application pursuant to 35 U.S.C. 122(b) or issuance of a patent pursuant to 35 U.S.C. 151. Further, a record may be disclosed, subject to the limitations of 37 CFR 1.14, as a routine use, to the public if the record was filed in an application which became abandoned or in which the proceedings were terminated and which application is referenced by either a published application, an application open to public inspections or an issued patent.

9. A record from this system of records may be disclosed, as a routine use, to a Federal, State, or local law enforcement agency, if the USPTO becomes aware of a violation or potential violation of law or regulation.

UNITED STATES PATENT AND TRADEMARK OFFICE

Commissioner for Patents
United States Patent and Trademark Office
P.O. Box 1450
Alexandria, VA 22313-1450
www.uspto.gov

In re Patent No. 6317068
Issue Date: November 13,2001
Application No. 09378993
Filed: August 23,1999
Attorney Docket No. 645.300US01

:
:DECISION GRANTING PETITION
:UNDER 37 CFR 1.378(c)
:

This is a decision on the electronic petition, filed October 18,2010 ,under 37 CFR 1.378(c) to accept the unintentionally delayed payment of the 7.5 year maintenance fee for the above-identified patent.

The petition is **GRANTED**.

The maintenance fee is accepted, and the above-identified patent reinstated as of October 18,2010 . This decision also constitutes notice that the fee has been accepted. An electronic copy of the petition and this decision has been created as an entry in the Image File Wrapper. Nevertheless, petitioner should print and retain an independent copy.

Telephone inquiries related to this electronic decision should be directed to the Electronic Business Center at 1-866-217-9197.

PTO/SB/66 (03-09)
Approved for use through 03/31/2012. OMB 0651-0016
U.S. Patent and Trademark Office: U.S. DEPARTMENT OF COMMERCE
Under the Paperwork Reduction Act of 1995, no persons are required to respond to a collection of information unless it displays valid OMB control number.

PETITION TO ACCEPT UNINTENTIONALLY DELAYED PAYMENT OF MAINTENANCE FEE IN AN EXPIRED PATENT (37 CFR 1.378(c))

Patent Number	Issue Date (YYYY-MM-DD)	Application Number	Filing Date (YYYY-MM-DD)	Docket Number (if applicable)
6317068	2001-11-13	09378993	1999-08-23	645.300US01

CAUTION: Maintenance fee (and surcharge, if any) payment must correctly identify: (1) the patent number and (2) the application number of the actual U.S. application leading to issuance of that patent to ensure the fee(s) is/are associated with the correct patent. 37 CFR 1.366(c) and (d).

SMALL ENTITY

☐ Patentee claims, or has previously claimed, small entity status. See 37 CFR 1.27.

LOSS OF ENTITLEMENT TO SMALL ENTITY STATUS

☐ Patentee is no longer entitled to small entity status. See 37 CFR 1.27(g)

NOT Small Entity

	Fee	Code
○	3 ½ year	(1551)
◉	7 ½ year	(1552)
○	11 ½ year	(1553)

Small Entity

	Fee	Code
○	3 ½ year	(2551)
○	7 ½ year	(2552)
○	11 ½ year	(2553)

SURCHARGE

The surcharge required by 37 CFR 1.20(i)(2) (Fee Code 1558) must be paid as a condition of accepting unintentionally delayed payment of the maintenance fee.

MAINTENANCE FEE (37 CFR 1.20(e)-(g))

The appropriate maintenance fee must be submitted with this petition.

STATEMENT

THE UNDERSIGNED CERTIFIES THAT THE DELAY IN PAYMENT OF THE MAINTENANCE FEE TO THIS PATENT WAS UNINTENTIONAL

PETITIONER(S) REQUEST THAT THE DELAYED PAYMENT OF THE MAINTENANCE FEE BE ACCEPTED AND THE PATENT REINSTATED

THIS PORTION MUST BE COMPLETED BY THE SIGNATORY OR SIGNATORIES

37 CFR 1.378(d) states: "Any petition under this section must be signed by an attorney or agent registered to practice before the Patent and Trademark Office, or by the patentee, the assignee, or other party in interest."

I certify, in accordance with 37 CFR 1.4(d)(4) that I am

◉ An attorney or agent registered to practice before the Patent and Trademark Office

○ A sole patentee

○ A joint patentee; I certify that I am authorized to sign this submission on behalf of all the other patentees.

○ A joint patentee; all of whom are signing this e-petition

○ The assignee of record of the entire interest

PTO/SB/66 (03-09)
Approved for use through 03/31/2012. OMB 0651-0016
U.S. Patent and Trademark Office: U.S. DEPARTMENT OF COMMERCE
Under the Paperwork Reduction Act of 1995, no persons are required to respond to a collection of information unless it displays valid OMB control number.

Patent Practitioner			
A signature of the applicant or representative is required in accordance with 37 CFR 1.33 and 10.18. Please see 37 CFR 1.4(d) for the form of the signature			
Signature	/Kendal M. Sheets/	Date (YYYY-MM-DD)	2010-10-15
Name	Kendal M. Sheets	Registration Number	47077

This collection of information is required by 37 CFR 1.378(c). The information is required to obtain or retain a benefit by the public which is to file (and by the USPTO to process) an application. Confidentiality is governed by 35 U.S.C. 122 and 37 CFR 1.11 and 1.14. This collection is estimated to take 1 hour to complete, including gathering, preparing, and submitting the completed application form to the USPTO. Time will vary depending upon the individual case. Any comments on the amount of time you require to complete this form and/ or suggestions for reducing this burden, should be sent to the Chief Information Officer, U.S. Patent and Trademark Office, U.S. Department of Commerce, P.O. Box 1450, Alexandria, VA 22313-1450. DO NOT SEND FEES OR COMPLETED FORMS TO THIS ADDRESS. **This form can only be used when in conjunction with EFS-Web. If this form is mailed to the USPTO, it may cause delays in reinstating the patent.**

Privacy Act Statement

The Privacy Act of 1974 (P.L. 93-579) requires that you be given certain information in connection with your submission of the attached form related to a patent application or patent. Accordingly, pursuant to the requirements of the Act, please be advised that: (1) the general authority for the collection of this information is 35 U.S.C. 2(b)(2); (2) furnishing of the information solicited is voluntary; and (3) the principal purpose for which the information is used by the U.S. Patent and Trademark Office is to process and/or examine your submission related to a patent application or patent. If you do not furnish the requested information, the U.S. Patent and Trademark Office may not be able to process and/or examine your submission, which may result in termination of proceedings or abandonment of the application or expiration of the patent.

The information provided by you in this form will be subject to the following routine uses:

1. The information on this form will be treated confidentially to the extent allowed under the Freedom of Information Act (5 U.S.C. 552) and the Privacy Act (5 U.S.C. 552a). Records from this system of records may be disclosed to the Department of Justice to determine whether the Freedom of Information Act requires disclosure of these records.

2. A record from this system of records may be disclosed, as a routine use, in the course of presenting evidence to a court, magistrate, or administrative tribunal, including disclosures to opposing counsel in the course of settlement negotiations.

3. A record in this system of records may be disclosed, as a routine use, to a Member of Congress submitting a request involving an individual, to whom the record pertains, when the individual has requested assistance from the Member with respect to the subject matter of the record.

4. A record in this system of records may be disclosed, as a routine use, to a contractor of the Agency having need for the information in order to perform a contract. Recipients of information shall be required to comply with the requirements of the Privacy Act of 1974, as amended, pursuant to 5 U.S.C. 552a(m).

5. A record related to an International Application filed under the Patent Cooperation Treaty in this system of records may be disclosed, as a routine use, to the International Bureau of the World Intellectual Property Organization, pursuant to the Patent Cooperation Treaty.

6. A record in this system of records may be disclosed, as a routine use, to another federal agency for purposes of National Security review (35 U.S.C. 181) and for review pursuant to the Atomic Energy Act (42 U.S.C. 218(c)).

7. A record from this system of records may be disclosed, as a routine use, to the Administrator, General Services, or his/her designee, during an inspection of records conducted by GSA as part of that agency's responsibility to recommend improvements in records management practices and programs, under authority of 44 U.S.C. 2904 and 2906. Such disclosure shall be made in accordance with the GSA regulations governing inspection of records for this purpose, and any other relevant (i.e., GSA or Commerce) directive. Such disclosure shall not be used to make determinations about individuals.

8. A record from this system of records may be disclosed, as a routine use, to the public after either publication of the application pursuant to 35 U.S.C. 122(b) or issuance of a patent pursuant to 35 U.S.C. 151. Further, a record may be disclosed, subject to the limitations of 37 CFR 1.14, as a routine use, to the public if the record was filed in an application which became abandoned or in which the proceedings were terminated and which application is referenced by either a published application, an application open to public inspections or an issued patent.

9. A record from this system of records may be disclosed, as a routine use, to a Federal, State, or local law enforcement agency, if the USPTO becomes aware of a violation or potential violation of law or regulation.

UNITED STATES PATENT AND TRADEMARK OFFICE

Commissioner for Patents
United States Patent and Trademark Office
P.O. Box 1450
Alexandria, VA 22313-1450
www.uspto.gov

MARVIN B EICKENROHT
BROWNING BUSHMAN
5718 WESTHEIMER
SUITE 1800
HOUSTON TX 77057

MAILED
NOV 09 2011
OFFICE OF PETITIONS

In re Patent No. 6,244,316 :
Issue Date: June 12, 2001 :
Application No. 09/379,148 : NOTICE
Filed: August 21, 1999 :
Attorney Docket No. NAED001 :

This is a notice regarding your request for acceptance of a fee deficiency submission under 37 CFR 1.28. On September 1, 1998, the Court of Appeals for the Federal Circuit held that 37 CFR 1.28(c) is the sole provision governing the time for correction of the erroneous payment of the issue fee as a small entity. **See DH Technology v. Synergystex International, Inc. 154 F.3d 1333, 47 USPQ2d 1865 (Fed. Cir. Sept. 1, 1998).**

The Office no longer investigates or rejects original or reissue applications under 37 CFR 1.56. **1098 Off. Gaz. Pat. Office 502 (January 3, 1989).** Therefore, nothing in this Notice is intended to imply that an investigation was done.

Your fee deficiency submission under 37 CFR 1.28 is hereby **ACCEPTED.**

This application is no longer entitled to small entity status. Accordingly, all future fees paid in this application must be paid at the large entity rate.

Inquiries related to this communication should be directed to Diane Goodwyn at (571) 272-6735.

Thurman K. Page
Petitions Examiner
Office of Petitions

UNITED STATES PATENT AND TRADEMARK OFFICE

Commissioner for Patents
United States Patent and Trademark Office
P.O. Box 1450
Alexandria, VA 22313-1450
www.uspto.gov

MAILED
JAN 06 2012
OFFICE OF PETITIONS

COX SMITH MATTHEWS INCORPORATED
112 EAST PECAN STREET, SUITE 1800
SAN ANTONIO TX 78205-1521

In re Patent No. 6,244,316 :
Issue Date: June 12, 2001 :
Application No. 09/379,148 : DECISION ON REQUEST FOR REFUND
Filed: August 21, 1999 :
Attorney Docket No. NAED001 :

This is a decision on the Request For Refund filed December 21, 2011.

The request is **DISMISSED**.

The request for refund is dismissed because USPTO regulations require that papers filed in the application be signed by a registered attorney or agent, by the applicants (inventors) or by the assignee of the entire interest who has taken action in the application in accordance with 37 CFR 3.71. The request for refund is signed Lori Lapidario. Note 37 CFR 1.33(b) which states:

> (b) Amendments and other papers. Amendments and other papers, except for written assertions pursuant to § 1.27(c)(2)(ii) of this part, filed in the application must be signed by:
> (1) A registered patent attorney or patent agent of record appointed in compliance with § 1.32(b);
> (2) A registered patent attorney or patent agent not of record who acts in a representative capacity under the provisions of § 1.34;
> (3) An assignee as provided for under §3.71(b) of this chapter; or
> (4) All of the applicants (§ 1.41(b)) for patent, unless there is an assignee of the entire interest and such assignee has taken action in the application in accordance with § 3.71 of this chapter.

Any questions concerning this matter may be directed to the undersigned at (571) 272-3208.

/KOC/
Karen Creasy
Petitions Examiner
Office of Petitions

UNITED STATES PATENT AND TRADEMARK OFFICE

Commissioner for Patents
United States Patent and Trademark Office
P.O. Box 1450
Alexandria, VA 22313-1450
www.uspto.gov

COX SMITH MATTHEWS INCORPORATED
112 EAST PECAN STREET, SUITE 1800
SAN ANTONIO TX 78205-1521

MAILED
JAN 26 2012
OFFICE OF PETITIONS

In re Patent No. 6,244,316
Issue Date: June 12, 2001
Application No. 09/379,148
Filed: August 21, 1999
Attorney Docket No. NAED001

DECISION ON REQUEST FOR REFUND

This is a decision on the Request For Refund filed January 11, 2012.

The request is **GRANTED**.

Applicant files the above request for refund and states that "The Registrant filed the Notification of Loss of Small Entity Status and Payment of Fee Deficiency on September 21, 2011 with payment of associated fees by check no. 107459 in the amount of $1,240. Therefore, Registrant's deposit account no. 03-3483 should not have been charged the $1,240 deficiency fee and requests a refund for the said fee."

In view of the above, a total of $1,240.00 is being credited to applicant's deposit account as authorized.

Any questions concerning this matter may be directed to the undersigned at (571) 272-3208.

/KOC/
Karen Creasy
Petitions Examiner
Office of Petitions

UNITED STATES PATENT AND TRADEMARK OFFICE

Commissioner for Patents
United States Patent and Trademark Office
P.O. Box 1450
Alexandria, VA 22313-1450
www.uspto.gov

In re Patent No. 6382190
Issue Date: May 7,2002
Application No. 09380590
Filed: September 10,1999
Attorney Docket No. 99182

:
:DECISION GRANTING PETITION
:UNDER 37 CFR 1.378(c)
:

This is a decision on the electronic petition, filed January 25,2011 ,under 37 CFR 1.378(c) to accept the unintentionally delayed payment of the 7.5 year maintenance fee for the above-identified patent.

The petition is **GRANTED**.

The maintenance fee is accepted, and the above-identified patent reinstated as of January 25,2011 . This decision also constitutes notice that the fee has been accepted. An electronic copy of the petition and this decision has been created as an entry in the Image File Wrapper. Nevertheless, petitioner should print and retain an independent copy.

Telephone inquiries related to this electronic decision should be directed to the Electronic Business Center at 1-866-217-9197.

PTO/SB/66 (03-09)
Approved for use through 03/31/2012. OMB 0651-0016
U.S. Patent and Trademark Office: U.S. DEPARTMENT OF COMMERCE
Under the Paperwork Reduction Act of 1995, no persons are required to respond to a collection of information unless it displays valid OMB control number.

PETITION TO ACCEPT UNINTENTIONALLY DELAYED PAYMENT OF MAINTENANCE FEE IN AN EXPIRED PATENT (37 CFR 1.378(c))

Patent Number	Issue Date (YYYY-MM-DD)	Application Number	Filing Date (YYYY-MM-DD)	Docket Number (if applicable)
6382190	2002-05-07	09380590	1999-09-10	ID 005111

CAUTION: Maintenance fee (and surcharge, if any) payment must correctly identify: (1) the patent number and (2) the application number of the actual U.S. application leading to issuance of that patent to ensure the fee(s) is/are associated with the correct patent. 37 CFR 1.366(c) and (d).

SMALL ENTITY

☐ Patentee claims, or has previously claimed, small entity status. See 37 CFR 1.27.

LOSS OF ENTITLEMENT TO SMALL ENTITY STATUS

☐ Patentee is no longer entitled to small entity status. See 37 CFR 1.27(g)

NOT Small Entity			Small Entity		
	Fee	Code		Fee	Code
○	3 ½ year	(1551)	○	3 ½ year	(2551)
◉	7 ½ year	(1552)	○	7 ½ year	(2552)
○	11 ½ year	(1553)	○	11 ½ year	(2553)

SURCHARGE

The surcharge required by 37 CFR 1.20(i)(2) (Fee Code 1558) must be paid as a condition of accepting unintentionally delayed payment of the maintenance fee.

MAINTENANCE FEE (37 CFR 1.20(e)-(g))

The appropriate maintenance fee must be submitted with this petition.

STATEMENT

THE UNDERSIGNED CERTIFIES THAT THE DELAY IN PAYMENT OF THE MAINTENANCE FEE TO THIS PATENT WAS UNINTENTIONAL

PETITIONER(S) REQUEST THAT THE DELAYED PAYMENT OF THE MAINTENANCE FEE BE ACCEPTED AND THE PATENT REINSTATED

THIS PORTION MUST BE COMPLETED BY THE SIGNATORY OR SIGNATORIES

37 CFR 1.378(d) states: "Any petition under this section must be signed by an attorney or agent registered to practice before the Patent and Trademark Office, or by the patentee, the assignee, or other party in interest."

I certify, in accordance with 37 CFR 1.4(d)(4) that I am

◉ An attorney or agent registered to practice before the Patent and Trademark Office

○ A sole patentee

○ A joint patentee; I certify that I am authorized to sign this submission on behalf of all the other patentees.

○ A joint patentee; all of whom are signing this e-petition

○ The assignee of record of the entire interest

PTO/SB/66 (03-09)
Approved for use through 03/31/2012. OMB 0651-0016
U.S. Patent and Trademark Office: U.S. DEPARTMENT OF COMMERCE
Under the Paperwork Reduction Act of 1995, no persons are required to respond to a collection of information unless it displays valid OMB control number.

Patent Practitioner			
A signature of the applicant or representative is required in accordance with 37 CFR 1.33 and 10.18. Please see 37 CFR 1.4(d) for the form of the signature			
Signature	/SMG/	Date (YYYY-MM-DD)	2011-01-25
Name	Steven M. Gruskin	Registration Number	36818

This collection of information is required by 37 CFR 1.378(c). The information is required to obtain or retain a benefit by the public which is to file (and by the USPTO to process) an application. Confidentiality is governed by 35 U.S.C. 122 and 37 CFR 1.11 and 1.14. This collection is estimated to take 1 hour to complete, including gathering, preparing, and submitting the completed application form to the USPTO. Time will vary depending upon the individual case. Any comments on the amount of time you require to complete this form and/ or suggestions for reducing this burden, should be sent to the Chief Information Officer, U.S. Patent and Trademark Office, U.S. Department of Commerce, P.O. Box 1450, Alexandria, VA 22313-1450. DO NOT SEND FEES OR COMPLETED FORMS TO THIS ADDRESS. **This form can only be used when in conjunction with EFS-Web. If this form is mailed to the USPTO, it may cause delays in reinstating the patent.**

Privacy Act Statement

The Privacy Act of 1974 (P.L. 93-579) requires that you be given certain information in connection with your submission of the attached form related to a patent application or patent. Accordingly, pursuant to the requirements of the Act, please be advised that: (1) the general authority for the collection of this information is 35 U.S.C. 2(b)(2); (2) furnishing of the information solicited is voluntary; and (3) the principal purpose for which the information is used by the U.S. Patent and Trademark Office is to process and/or examine your submission related to a patent application or patent. If you do not furnish the requested information, the U.S. Patent and Trademark Office may not be able to process and/or examine your submission, which may result in termination of proceedings or abandonment of the application or expiration of the patent.

The information provided by you in this form will be subject to the following routine uses:

1. The information on this form will be treated confidentially to the extent allowed under the Freedom of Information Act (5 U.S.C. 552) and the Privacy Act (5 U.S.C. 552a). Records from this system of records may be disclosed to the Department of Justice to determine whether the Freedom of Information Act requires disclosure of these records.

2. A record from this system of records may be disclosed, as a routine use, in the course of presenting evidence to a court, magistrate, or administrative tribunal, including disclosures to opposing counsel in the course of settlement negotiations.

3. A record in this system of records may be disclosed, as a routine use, to a Member of Congress submitting a request involving an individual, to whom the record pertains, when the individual has requested assistance from the Member with respect to the subject matter of the record.

4. A record in this system of records may be disclosed, as a routine use, to a contractor of the Agency having need for the information in order to perform a contract. Recipients of information shall be required to comply with the requirements of the Privacy Act of 1974, as amended, pursuant to 5 U.S.C. 552a(m).

5. A record related to an International Application filed under the Patent Cooperation Treaty in this system of records may be disclosed, as a routine use, to the International Bureau of the World Intellectual Property Organization, pursuant to the Patent Cooperation Treaty.

6. A record in this system of records may be disclosed, as a routine use, to another federal agency for purposes of National Security review (35 U.S.C. 181) and for review pursuant to the Atomic Energy Act (42 U.S.C. 218(c)).

7. A record from this system of records may be disclosed, as a routine use, to the Administrator, General Services, or his/her designee, during an inspection of records conducted by GSA as part of that agency's responsibility to recommend improvements in records management practices and programs, under authority of 44 U.S.C. 2904 and 2906. Such disclosure shall be made in accordance with the GSA regulations governing inspection of records for this purpose, and any other relevant (i.e., GSA or Commerce) directive. Such disclosure shall not be used to make determinations about individuals.

8. A record from this system of records may be disclosed, as a routine use, to the public after either publication of the application pursuant to 35 U.S.C. 122(b) or issuance of a patent pursuant to 35 U.S.C. 151. Further, a record may be disclosed, subject to the limitations of 37 CFR 1.14, as a routine use, to the public if the record was filed in an application which became abandoned or in which the proceedings were terminated and which application is referenced by either a published application, an application open to public inspections or an issued patent.

9. A record from this system of records may be disclosed, as a routine use, to a Federal, State, or local law enforcement agency, if the USPTO becomes aware of a violation or potential violation of law or regulation.

UNITED STATES PATENT AND TRADEMARK OFFICE

Commissioner for Patents
United States Patent and Trademark Office
P.O. Box 1450
Alexandria, VA 22313-1450
www.uspto.gov
DIW Jul-11

ALBERT FERRO
Medler Ferro PLLC
8607 Rockdale Lane
Springfield, VA 22153

MAILED

JUL 20 2011

OFFICE OF PETITIONS

In re Patent No. 6,656,306 :
Issue Date: December 2, 2003 :
Application Number: 09/380,649 : DECISION ON PETITION
Filing Date: September 13, 1999 :
For: METHOD FOR THE PREPARATION :
AND APPLICATION OF PRESSURE AND :
HEAT APPLIED IMAGE TRANSFERS :
USE :

This is a decision on the "PETITION TO TRANSFER MAINTENANCE FEE PAYMENT MADE TO THE INCORRECT PATENT", filed on June 3, 2011, which is being treated as a petition under 37 CFR 1.377.

The petition is **dismissed**.

The patent issued on December 2, 2003. Patentee timely paid the first maintenance fee. The window for payment of the second maintenance fee opened on December 2, 2010. The maintenance fee may be paid until June 2, 2011, or, with a surcharge for late payment, from June 3, 2011 through December 2, 2011.

In the present petition, patentee requests that the Office transfer the 7.5 year maintenance fee payment made on June 3, 2011, from Patent No. 6,656,302 to Patent No. 6,656,306, and refund the difference between the large entity fee made and the small entity fee due (including the difference in the surcharges) to the credit card used for payment.

Specifically, Albert L. Ferro, Attorney for patentee, explains:

> The following facts transpired in payment of the Maintenance Fee to the improper patent. The undersigned,

> acting on behalf of the assignee of the patent, entered Public PAIR at the USPTO web-site and typed in patent no. "6656302" instead of patent no. "6656306". The undersigned then proceeded to click on the "Fees" button, then the "Retrieve Fees to Pay" button and continued through to pay the Maintenance Fee on the wrong patent. In so doing, the undersigned also inadvertently paid fees for a large entity instead of a small entity. Accordingly, it is respectfully requested that the Maintenance Fee payment inadvertently paid to U.S. Patent No. 6,656,302 be transferred to U.S. Patent No. 6,656,306 and the difference between the large entity fee paid and the small entity fee due (and the surcharge) be refunded to the credit card number used to pay the fee.

Petition, p. 1.

A grantable petition under 37 CFR 1.377 to accept and record a maintenance fee requires:

(1) submission of the petition be submitted within two months of the action complained of;
(2) payment of the petition fee;
(3) proof that the maintenance fee, and any applicable surcharge, was received in the Office prior to the date of patent expiration, and
(4) proof that proper identification of the patent and application numbers under 37 CFR 1.366(c) was submitted with the maintenance fee payment.

The petition lacks item (4).

As to item (4), the showing of record does not indicate that at least one mandatory identifier was correct as required by 37 CFR 1.366(c).

As stated in MPEP 2580:

> A petition under 37 CFR 1.377 would not be appropriate where there is a complete failure to include at least one correct mandatory identifier as required by 37 CFR 1.366(c) for the patent since no evidence would be present as to the patent on which the maintenance fee was intended to be paid. If the maintenance fee payment with an incorrect mandatory identifier was made near the end of the grace period, the patent might expire since the Office would not credit the fee to the patent. A petition under 37 CFR 1.377 would not be

> appropriate where the patentee paid a maintenance fee on one patent when the patentee intended to pay the maintenance fee on a different patent but through error identified the wrong patent number and application number. Likewise, a petition under 37 CFR 1.377 would not be appropriate where the entire maintenance fee payment, including any necessary surcharge, was not filed prior to expiration of the patent.

Further, with regards to the request for refund, 37 CFR 1.26(a) states that:

> The Director may refund any fee paid by mistake or in excess of that required. A change of purpose after the payment of a fee, such as when a party desires to withdraw a patent filing for which the fee was paid, including an application, an appeal, or a request for an oral hearing, will not entitle a party to a refund of such fee.

MPEP 607.02 states, in pertinent part that:

> Under 35 U.S.C. 42(d) and 37 CFR 1.26, the Office may refund: (1) a fee paid by mistake (e.g., fee paid when no fee is required); or (2) any fee paid in excess of the amount of fee that is required. *See Ex parte Grady*, 59 USPQ 276, 277 (Comm'r Pat. 1943) (the statutory authorization for the refund of fees under the "by mistake" clause is applicable only to a mistake relating to the fee payment).
>
> When an applicant or patentee takes an action "by mistake" (*e.g.*, files an application or maintains a patent in force "by mistake"), the submission of fees required to take that action (e.g., a filing fee submitted with such application or a maintenance fee submitted for such patent) is not a "fee paid by mistake" within the meaning of 35 U.S.C. 42(d).

37 CFR 1.377 requires proof that the mandatory identifiers (patent number and application number) for the patent which patentee intended to maintain in force, were included with the maintenance fee payment. In the absence of said identifiers, the showing of record is that patentee intended to pay the maintenance fee for the patent listed which was maintained in

force (*i.e.*, Patent No. 6,656,302). Simply put, it is the patentee's responsibility to verify that the payment is directed to the patent number and application number for the patent which patentee actually intends to maintain in force. In the absence of such information (the mandatory identifiers as specified above), the Office cannot conclude that, based on the information present at the time the maintenance fee payment was received, the patent to which the payment was applied, (*i.e.*, Patent No. 6,656,302) was not the patent which patentee intended to maintain in force, or that the maintenance fee was applied to the aforementioned patent in error.

Moreover, the maintenance fee and surcharge due in Patent No. 6,656,302 at the time of payment were the large entity amounts. Therefore, the large entity maintenance fee and surcharge payments paid on June 3, 2011, in 6,656,302, were not paid in excess of the amount that was required in that patent. Therefore, as the maintenance fee and surcharge paid on June 3, 2011, were not paid by mistake (pursuant to MPEP 607.02) or in excess of the amount required, any request for a refund of the maintenance fee and surcharge, including the difference between the large and small entity amounts, is dismissed.

Any renewed petition should be submitted within **TWO (2) MONTHS** to be considered timely. No extensions of this time period is permitted.

The address in the petition is different than the correspondence address. As a one-time courtesy, a copy of this decision is being mailed to the address in the petition. All future correspondence, however, will be mailed solely to the address of record. A change of correspondence address (copy enclosed) should be completed and returned if the correspondence address needs to be updated.

Further correspondence with respect to this matter should be addressed as follows:

By mail: Mail Stop Petition,
Commissioner for Patents
P.O. Box 1450
Alexandria VA 22313-1450

By FAX: (571)273-8300
Attn: Office of Petitions

By hand: Customer Service Window
Mail Stop Petition
Randolph Building
401 Dulany Street
Alexandria, VA 22314

A reply may also be filed via the EFS-Web system of the USPTO.

Any questions concerning this matter may be directed to the undersigned at (571) 272-3211.

Christina T. Donnell

Christina Tartera Donnell
Senior Petitions Attorney
Office of Petitions

Encl: PTO/SB/123

Cc: Ober/Kaler
c/o Royal W. Craig
120 East Baltimore Street
Baltimore MD 21202-1643

UNITED STATES PATENT AND TRADEMARK OFFICE

Commissioner for Patents
United States Patent and Trademark Office
P.O. Box 1450
Alexandria, VA 22313-1450
www.uspto.gov

MAILED

MAY 17 2011

OFFICE OF PETITIONS

HOWISON & ARNOTT, L.L.P.
P.O. BOX 741715
DALLAS, TX 75374-1715

In re Patent No. 7,284,066 :
Issue Date: October 16, 2007 :
Application No. 09/382,372 : NOTICE
Filed: August 24, 1999 :
Attorney Docket No. RPXC – 24,738

This is a notice regarding your request for acceptance of a fee deficiency submission under 37 CFR 1.28. On September 1, 1998, the Court of Appeals for the Federal Circuit held that 37 CFR 1.28(c) is the sole provision governing the time for correction of the erroneous payment of the issue fee as a small entity. **See DH Technology v. Synergystex International, Inc. 154 F.3d 1333, 47 USPQ2d 1865 (Fed. Cir. Sept. 1, 1998).**

The Office no longer investigates or rejects original or reissue applications under 37 CFR 1.56. **1098 Off. Gaz. Pat. Office 502 (January 3, 1989)**. Therefore, nothing in this Notice is intended to imply that an investigation was done.

Your fee deficiency submission under 37 CFR 1.28 is hereby **ACCEPTED**.

Inquiries related to this communication should be directed to Irvin Dingle at (571) 272-3210.

Irvin Dingle
Petitions Examiner
Office of Petitions

UNITED STATES PATENT AND TRADEMARK OFFICE

Commissioner for Patents
United States Patent and Trademark Office
P.O. Box 1450
Alexandria, VA 22313-1450
www.uspto.gov

Hogan Lovells US LLP
1999 AVENUE OF THE STARS
SUITE 1400
LOS ANGELES CA 90067

MAILED

AUG 30 2011

OFFICE OF PETITIONS

In re Patent No. 6,404,945 :
Issue Date: June 11, 2002 :
Application No. 09/382,492 : ON PETITION
Filed: August 25, 1999 :
Attorney Docket No. 34013-00013 :

This is a decision on the petition under 37 CFR 1.378(c), filed August 12, 2011, to accept the unintentionally delayed payment of a maintenance fee for the above-identified patent.

The petition is **GRANTED**.

This patent expired on June 12, 2010, for failure to pay the seven and one-half year maintenance fee. Since this petition was submitted within twenty-four months after the six-month grace period provided in 37 CFR 1.362(e), the petition was timely filed under the provisions of 37 CFR 1.378(c).

The maintenance fee is hereby accepted and the above-identified patent is reinstated as of the mail date of this decision.

The file does not indicate a change of address has been submitted, although the address given on the petition differs from the address of record. If appropriate, a change of fee address (form PTO/SB/47) and a request for customer number (form PTO/SB/125) should be filed in accordance with Manual of Patent Examining Procedure, section 2540. A courtesy copy of this decision is being mailed to the address on the petition. However, the Office will mail all future correspondence solely to the address of record.

Telephone inquiries concerning this decision should be directed to Kimberly Inabinet at (571) 272-4618.

The patent file is being forwarded to Files Repository.

/Kimberly Inabinet/

Kimberly Inabinet
Petitions Examiner
Office of Petitions

cc: Celine Jimenez Crowson
555 Thirteenth Street, NW
Washington, DC 20004

UNITED STATES PATENT AND TRADEMARK OFFICE

Commissioner for Patents
United States Patent and Trademark Office
P.O. Box 1450
Alexandria, VA 22313-1450
www.uspto.gov

OSTROLENK FABER LLP
1180 AVENUE OF THE AMERICAS
NEW YORK, NY 10036-8403

MAILED
AUG 11 2011
OFFICE OF PETITIONS

In re Patent No. 6,261,244
Issue Date: July 17, 2001
Application No. 09/383,177
Filed: August 25, 1999
Attorney Docket No. V1025/200218

ON PETITION

This is a decision in response to a petition filed July 22, 2011 (Certificate of Mailing date July 18, 2011), under 37 CFR 1.378(c), to accept the unintentionally delayed payment of a maintenance fee for the above-identified patent.

The petition is **GRANTED**.

The patent issued on July 17, 2001. The six month grace period for the 7 ½ year maintenance fee expired on July 18, 2009, for failure to pay the 7 ½ year maintenance fee. A petition under 37 CFR 1.378(c) must be filed within twenty-four months after the six month grace period specified in 35 USC 41(b).

A review of the record indicates that a petition under 37 CFR 1.378(c) was filed via Certificate of Mailing on July 18, 2011. Pursuant to 37 CFR 1.7: Times for taking action; Expiration on Saturday, Sunday, or Federal holiday states: (a) whenever periods of time are specified in this part in days, calendar days are intended. When the day, or the last day fixed by statute or by or under this part for taking any action or paying any fee in the United States Patent and Trademark Office falls on Saturday, Sunday, or on a Federal holiday within the District of Columbia, the action may be taken, or the fee paid, on the next succeeding business day which is not a Saturday, Sunday, or a Federal holiday. See § 1.304 for time for appeal or for commencing civil action. Therefore, since this petition was submitted within twenty-four months after the six-month grace period provided in 37 CFR 1.362(e), the petition was timely filed under the provisions of 37 CFR 1.378(c).

The maintenance fee is hereby accepted and the above-identified patent is reinstated as of the mail date of this decision.

Telephone inquiries concerning this decision should be directed to the undersigned at (571) 272-6059.

/A. Kelley-Collier/
Alicia Kelley-Collier
Petitions Examiner
Office of Petitions

UNITED STATES PATENT AND TRADEMARK OFFICE

COMMISSIONER FOR PATENTS
UNITED STATES PATENT AND TRADEMARK OFFICE
P.O. BOX 1450
ALEXANDRIA, VA 22313-1450
www.uspto.gov

PATENT CORRESPONDENCE
ARNALL GOLDEN GREGORY LLP
171 17TH STREET NW
SUITE 2100
ATLANTA GA 30363

MAILED

SEP 22 2010

OFFICE OF PETITIONS

In re Patent No. 6,212,255 :
Issue Date: April 3, 2001 :
Application No. 09/383,226 : DECISION ON PETITION
Filed: August 26, 1999 : UNDER 37 CFR 1.378(b)
For: SYSTEM FOR X-RAY IRRADA TION :
OF BLOOD :

This is a decision on the petition under 37 CFR 1.378(b), filed April 20, 2010.

The petition under 37 CFR 1.378(b) for reinstatement of expired patent is hereby **DISMISSED**.

If reconsideration of this decision is desired, a petition for reconsideration under 37 CFR 1.378(e) must be filed within TWO (2) MONTHS from the mail date of this decision. No extension of this 2-month time limit can be granted under 37 CFR 1.136(a) or (b). **Any such petition for reconsideration must be accompanied by the petition fee of $400 as set forth in 37 CFR 1.17(f).** The petition for reconsideration should include an exhaustive attempt to provide the lacking item(s) noted below, since, after a decision on the petition for reconsideration, no further reconsideration or review of the matter will be undertaken by the Director.

The patent issued April 3, 2001. The 3.5 year maintenance fee could have been paid from April 3, 2004 through October 3, 2004 without a surcharge, or with a surcharge during the period from October 4, 2004 through April 3, 2005. Accordingly, the patent expired on April 3, 2005 for failure to timely submit the second maintenance fee.

A petition to accept the delayed payment of a maintenance fee under 35 U.S.C. § 41(c) and 37 CFR 1.378(b) must be accompanied by (1) an adequate showing that the delay was unavoidable, since reasonable care was taken to ensure that the maintenance fee would be paid timely and that the petition was filed promptly after the patentee was notified of, or otherwise became aware of, the expiration of the patent, (2) payment of the appropriate maintenance fee, unless previously submitted, and (3) payment of the surcharge set forth in 37 CFR 1.20(i)(1).

This petition lacks item requirement (1) set forth above.

The Director may accept late payment of the maintenance fee if the delay is shown to the satisfaction of the Director to have been "unavoidable". 35 U.S.C. § 41(c)(1).

Petitioner states that neither patentee nor attorney Leo Aubel has any record or recollection of having received the UPSTO Notice mailed October 20, 2004. Petitioner indicates that the mail recipient for the patent was attorney Leo Aubel. Petitioner indicates Attorney Aubel's standard of practice was to maintain such records. Petitioner further states that patentee and Attorney Aubel also "have a standard of practice" whereby Attorney Aubel notifies patentee and receives money from patentee for paying fees, such as the missed maintenance fee payment. Petitioner states patentee has no record of receiving notice of the maintenance fee due date, no record indicating payment of the maintenance fee, or any bank records indicating instructions were given to pay the maintenance fee.

Petitioner further states that the patentee became aware that the patent was expired in a federal court pleading in which a "licensee of the Patent claimed a breach for the patent having gone abandoned." The pleading was received by litigation counsel on April 8, 2010.

Inventor Kirk declared he was to "approve and issue payment for renewal of the Patent." Inventor Kirk indicates he and Attorney Aubel "established a method for payment of fees surrounding certain patents" and that the method of payment was by check. Inventor Kirk indicates he has no records of any transactions involving the patent subsequent to the issue fee payment.

Attorney Aubel declares he prepared and prosecuted the application which issued as the instant patent.

Acceptance of late payment of a maintenance fee is considered under the same standard as that for reviving an abandoned application under 35 U.S.C. § 133 because 35 U.S.C. § 41(c)(1) uses the identical language, i.e. "unavoidable delay". Ray v. Lehman, 55 F.3d 606, 608-09, 34 USPQ2d 1786, 1787 (Fed. Cir. 1995)(quoting In re Patent No. 4,409,763, 7 USPQ2d 1798, 1800 (Comm'r Pat. 1988)). Decisions on reviving abandoned applications have adopted the "reasonably prudent person" standard in determining if the delay in responding to an Office action was unavoidable. Ex parte Pratt, 1887 Dec. Comm'r Pat. 31, 32-33 (Comm'r Pat. 1887)(the term "unavoidable" "is applicable to ordinary human affairs, and requires no more or greater care or diligence than is generally used and observed by prudent and careful men in relation to their most important business"); In re Mattullath, 38 App. D.C. 497, 514-515 (D.C. Cir. 1912); and Ex parte Henrich, 1913 Dec. Comm'r Pat. 139, 141. In addition, decisions on revival are made on a "case-by-case basis, taking all the facts and circumstances into account." Smith v. Mossinghoff, 671 F.2d 533, 538, 213 USPQ 977, 982 (D.C. Cir. 1982). Finally, a petition to revive an application as unavoidably abandoned cannot be granted where a petitioner has failed to meet his or her burden of establishing the cause of the unavoidable delay. Haines v. Quigg, 673 F. Supp. 314, 316-17, 5 USPQ2d 1130, 1131-32 (N.D. Ind. 1987).

Insofar as patentee's apparent lack of receipt of a USPTO Notice mailed October 20, 2004, patentee is reminded that failure to receive a Maintenance Fee Reminder from the USPTO will not relieve the patentee of the obligation to timely pay the appropriate maintenance fee to prevent expiration of the patent, nor will it constitute unavoidable delay if the patentee seeks to reinstate the patent under 37 CFR 1.378(b). See, In re Patent No. 4,409,763, 7 USPQ2d 1798

(Comm'r Pat. 1988), aff 'd sub nom. Rydeen v. Quigg, 748 F. Supp. 900, 16 USPQ2d 1876 (D.D.C. 1990), aff 'd, 937 F.2d 623 (Fed. Cir. 1991) (table), cert. denied, 502 U.S. 1075 (1992). In essence, patentee must show that he was aware of the need to pay the maintenance fee, and to that end was tracking it, or had engaged someone to track it before the expiration, but when the fee came due, was "unavoidably" prevented from making the maintenance fee payment from the time the payment was due until the filing of a grantable petition. Petitioner has failed to meet this burden.

In determining whether a delay in paying a maintenance fee was unavoidable, one looks to whether the party responsible for payment of the maintenance fee exercised the due care of a reasonably prudent person. Ray, 55 F3d at 608-609, 34 USPQ2D at 1787. It is incumbent upon the patent owner to implement steps to schedule and pay the fee, or obligate another to do so. See California Medical Products v. Technol. Med. Prod., 921 F.Supp 1219, 1259 (D. Del. 1995). That is, 37 CFR 1.378(b)(3) requires a showing of the steps in place to pay the maintenance fee, and the record currently lacks a sufficient showing that any steps were emplaced by petitioner or anyone else. In the absence of a showing that patentee or anyone else was engaged in tracking the maintenance fee due dates, and that party had in fact been tracking the due dates with a reliable tracking system, such as would be used by prudent and careful men in relation to their most important business, petitioner cannot reasonably show that the delay was unavoidable delay. In re Katrapat, 6 USPQ2d 1863, 1867-1868 (Comm'r Pat. 1988); California, supra.

Petitioner fails to establish that patentee, or someone obligated by behalf of patentee, was aware of the need to pay the maintenance fee and was in fact tracking the maintenance fee due date. While patentee indicates he had established a "method" with Attorney Aubel, the particulars of this "method" were not disclosed. As neither patentee nor Attorney Aubel acknowledges that either or both were aware of the need to pay the maintenance fee and that either or both were in fact tracking the maintenance fee for payment, the failure to timely remit the maintenance fee cannot be found to have been unavoidable.

Ultimately patentee bears the responsibility for timely remittance of the maintenance fee. The petition fails to establish that patentee was unavoidably delayed in making the payment. Accordingly, the Office is precluded from accepting the maintenance fee and surcharge. If reconsideration of this decision is not desired, petitioner may request a refund of this fee by writing to the Finance Office, Refund Section. A copy of this decision should accompany any request for refund.

Any renewed petition must establish that the entire period of delay from the time that the maintenance fee was due until the time of the filing of a grantable petition has been unavoidable. Petitioner is reminded that any renewed petition should entail an exhaustive effort to establish that the failure to timely pay the maintenance fee was unavoidable as after reconsideration pursuant to 37 CFR 1.378(e), no further reconsideration regarding unavoidable delay will be undertaken.

Petitioner must establish that patentee was aware of the need to pay the maintenance fee, and was tracking it, or had engaged someone to track it before the expiration, but when the fee came due, was "unavoidably" prevented from making the maintenance fee payment due until the filing

of a grantable petition. Petitioner must establish a nexus between the events complained of and the failure to timely remit the maintenance fee.

Petitioner may wish to submit statements of facts from his attorneys; copies of any contractual agreements between the attorneys and patentee whereby the attorneys was engaged to track the maintenance fee; copies of any reminder letters received from the attorneys to patentee concerning maintenance fees for the patent; and, a detailed statement concerning the system in place for tracking the maintenance fee.

Further correspondence with respect to this matter should be addressed as follows:

By mail:
Mail Stop PETITIONS
Commissioner for Patents
Post Office Box 1450
Alexandria, VA 22313-1450

By hand:
Customer Service Window
Mail Stop Petitions
Randolph Building
401 Dulany Street
Alexandria, VA 22314

By fax:
(571) 273-8300
ATTN: Office of Petitions

The requested revocation of power of attorney/change of address has been entered into the record.

Any questions concerning this matter may be directed to the undersigned at (571) 272-3205.

/ALESIA M. BROWN/

Alesia M. Brown
Petitions Attorney
Office of Petitions

PTO/SB/66 (03-09)
Approved for use through 03/31/2012. OMB 0651-0016
U.S. Patent and Trademark Office: U.S. DEPARTMENT OF COMMERCE
Under the Paperwork Reduction Act of 1995, no persons are required to respond to a collection of information unless it displays valid OMB control number.

PETITION TO ACCEPT UNINTENTIONALLY DELAYED PAYMENT OF MAINTENANCE FEE IN AN EXPIRED PATENT (37 CFR 1.378(c))

Patent Number	Issue Date (YYYY-MM-DD)	Application Number	Filing Date (YYYY-MM-DD)	Docket Number (if applicable)
6453464	2002-09-17	09383339	1999-08-25	

CAUTION: Maintenance fee (and surcharge, if any) payment must correctly identify: (1) the patent number and (2) the application number of the actual U.S. application leading to issuance of that patent to ensure the fee(s) is/are associated with the correct patent. 37 CFR 1.366(c) and (d).

SMALL ENTITY

☒ Patentee claims, or has previously claimed, small entity status. See 37 CFR 1.27.

LOSS OF ENTITLEMENT TO SMALL ENTITY STATUS

☐ Patentee is no longer entitled to small entity status. See 37 CFR 1.27(g)

NOT Small Entity	Fee	Code	Small Entity	Fee	Code
○	3 ½ year	(1551)	○	3 ½ year	(2551)
○	7 ½ year	(1552)	◉	7 ½ year	(2552)
○	11 ½ year	(1553)	○	11 ½ year	(2553)

SURCHARGE

The surcharge required by 37 CFR 1.20(i)(2) (Fee Code 1558) must be paid as a condition of accepting unintentionally delayed payment of the maintenance fee.

MAINTENANCE FEE (37 CFR 1.20(e)-(g))

The appropriate maintenance fee must be submitted with this petition.

STATEMENT

THE UNDERSIGNED CERTIFIES THAT THE DELAY IN PAYMENT OF THE MAINTENANCE FEE TO THIS PATENT WAS UNINTENTIONAL

PETITIONER(S) REQUEST THAT THE DELAYED PAYMENT OF THE MAINTENANCE FEE BE ACCEPTED AND THE PATENT REINSTATED

THIS PORTION MUST BE COMPLETED BY THE SIGNATORY OR SIGNATORIES

37 CFR 1.378(d) states: "Any petition under this section must be signed by an attorney or agent registered to practice before the Patent and Trademark Office, or by the patentee, the assignee, or other party in interest."

I certify, in accordance with 37 CFR 1.4(d)(4) that I am

○ An attorney or agent registered to practice before the Patent and Trademark Office

○ A sole patentee

○ A joint patentee; I certify that I am authorized to sign this submission on behalf of all the other patentees.

○ A joint patentee; all of whom are signing this e-petition

◉ The assignee of record of the entire interest

PTO/SB/66 (03-09)
Approved for use through 03/31/2012. OMB 0651-0016
U.S. Patent and Trademark Office: U.S. DEPARTMENT OF COMMERCE
Under the Paperwork Reduction Act of 1995, no persons are required to respond to a collection of information unless it displays valid OMB control number.

The Assignee of record of the entire interest			
Under 37 CFR 3.71 an assignee becomes of record by filing a statement in compliance with 37 CFR 3.73(b). Signature requirements are set forth in 37 CFR 1.4(d), and the undersigned certifies that he / she is empowered to act on behalf of the assignee of the entire interest			
Signature	/PATRICK J. PERKINS/	Date (YYYY-MM-DD)	2011-05-31
Name	PATRICK J. PERKINS		
Enter Reel and Frame Number		Remove	
Reel Number	010810	Frame Number	0641
Click ADD for additional Reel Number and Frame Number		Add	

This collection of information is required by 37 CFR 1.378(c). The information is required to obtain or retain a benefit by the public which is to file (and by the USPTO to process) an application. Confidentiality is governed by 35 U.S.C. 122 and 37 CFR 1.11 and 1.14. This collection is estimated to take 1 hour to complete, including gathering, preparing, and submitting the completed application form to the USPTO. Time will vary depending upon the individual case. Any comments on the amount of time you require to complete this form and/or suggestions for reducing this burden, should be sent to the Chief Information Officer, U.S. Patent and Trademark Office, U.S. Department of Commerce, P.O. Box 1450, Alexandria, VA 22313-1450. DO NOT SEND FEES OR COMPLETED FORMS TO THIS ADDRESS. **This form can only be used when in conjunction with EFS-Web. If this form is mailed to the USPTO, it may cause delays in reinstating the patent.**

Privacy Act Statement

The Privacy Act of 1974 (P.L. 93-579) requires that you be given certain information in connection with your submission of the attached form related to a patent application or patent. Accordingly, pursuant to the requirements of the Act, please be advised that: (1) the general authority for the collection of this information is 35 U.S.C. 2(b)(2); (2) furnishing of the information solicited is voluntary; and (3) the principal purpose for which the information is used by the U.S. Patent and Trademark Office is to process and/or examine your submission related to a patent application or patent. If you do not furnish the requested information, the U.S. Patent and Trademark Office may not be able to process and/or examine your submission, which may result in termination of proceedings or abandonment of the application or expiration of the patent.

The information provided by you in this form will be subject to the following routine uses:

1. The information on this form will be treated confidentially to the extent allowed under the Freedom of Information Act (5 U.S.C. 552) and the Privacy Act (5 U.S.C. 552a). Records from this system of records may be disclosed to the Department of Justice to determine whether the Freedom of Information Act requires disclosure of these records.

2. A record from this system of records may be disclosed, as a routine use, in the course of presenting evidence to a court, magistrate, or administrative tribunal, including disclosures to opposing counsel in the course of settlement negotiations.

3. A record in this system of records may be disclosed, as a routine use, to a Member of Congress submitting a request involving an individual, to whom the record pertains, when the individual has requested assistance from the Member with respect to the subject matter of the record.

4. A record in this system of records may be disclosed, as a routine use, to a contractor of the Agency having need for the information in order to perform a contract. Recipients of information shall be required to comply with the requirements of the Privacy Act of 1974, as amended, pursuant to 5 U.S.C. 552a(m).

5. A record related to an International Application filed under the Patent Cooperation Treaty in this system of records may be disclosed, as a routine use, to the International Bureau of the World Intellectual Property Organization, pursuant to the Patent Cooperation Treaty.

6. A record in this system of records may be disclosed, as a routine use, to another federal agency for purposes of National Security review (35 U.S.C. 181) and for review pursuant to the Atomic Energy Act (42 U.S.C. 218(c)).

7. A record from this system of records may be disclosed, as a routine use, to the Administrator, General Services, or his/her designee, during an inspection of records conducted by GSA as part of that agency's responsibility to recommend improvements in records management practices and programs, under authority of 44 U.S.C. 2904 and 2906. Such disclosure shall be made in accordance with the GSA regulations governing inspection of records for this purpose, and any other relevant (i.e., GSA or Commerce) directive. Such disclosure shall not be used to make determinations about individuals.

8. A record from this system of records may be disclosed, as a routine use, to the public after either publication of the application pursuant to 35 U.S.C. 122(b) or issuance of a patent pursuant to 35 U.S.C. 151. Further, a record may be disclosed, subject to the limitations of 37 CFR 1.14, as a routine use, to the public if the record was filed in an application which became abandoned or in which the proceedings were terminated and which application is referenced by either a published application, an application open to public inspections or an issued patent.

9. A record from this system of records may be disclosed, as a routine use, to a Federal, State, or local law enforcement agency, if the USPTO becomes aware of a violation or potential violation of law or regulation.

UNITED STATES PATENT AND TRADEMARK OFFICE

Commissioner for Patents
United States Patent and Trademark Office
P.O. Box 1450
Alexandria, VA 22313-1450
www.uspto.gov

In re Patent No. 6453464
Issue Date: September 17,2002
Application No. 09383339
Filed: August 25,1999
Attorney Docket No.

:
:DECISION GRANTING PETITION
:UNDER 37 CFR 1.378(c)
:

This is a decision on the electronic petition, filed May 31,2011 ,under 37 CFR 1.378(c) to accept the unintentionally delayed payment of the 7.5 year maintenance fee for the above-identified patent.

The petition is **GRANTED**.

The maintenance fee is accepted, and the above-identified patent reinstated as of May 31,2011 . This decision also constitutes notice that the fee has been accepted. An electronic copy of the petition and this decision has been created as an entry in the Image File Wrapper. Nevertheless, petitioner should print and retain an independent copy.

Telephone inquiries related to this electronic decision should be directed to the Electronic Business Center at 1-866-217-9197.

UNITED STATES PATENT AND TRADEMARK OFFICE

Commissioner for Patents
United States Patent and Trademark Office
P.O. Box 1450
Alexandria, VA 22313-1450
www.uspto.gov

MARK K. DICKSON
HOWREY, SIMON, ARNOLD & WHITE, LLP.
301 RAVENSWOOD AVENUE
MENLO PARK CA 94025

MAILED
JAN 11 2012
OFFICE OF PETITIONS

In re Patent No. 6,567,814 :
Issue Date: May 20, 2003 :
Application No. 09/383,354 : ON PETITION
Filed: August 26, 1999 :
Attorney Docket No. PSCI:010/KRE :

This is a decision on the petition under 37 CFR 1.378(c), filed October 17, 2011, to accept the delayed payment of a maintenance fee for the above-identified patent.

The petition is **DISMISSED**.

This patent issued on May 20, 2003. Accordingly, the grace period for paying the last maintenance fee expired at midnight on May 20, 2011. The Office of Finance records disclose receipt of a $2,850 maintenance fee and a $1,640 surcharge reinstatement petition fee. In view thereof, and as payment of the maintenance fee was received prior to expiration of the 24-month grace period, the period for reinstatement under the unintentional provisions of 37 CFR 1.378(c) would be appropriate if the conditions of 37 CFR 1.378(c) are satisfied.

A petition to accept the unintentionally delayed payment of a maintenance fee under 35 U.S.C. 41(c) and 37 CFR 1.378(c) must be accompanied by: (1) a statement that the delay was unintentional; (2) payment of the appropriate maintenance fee, unless previously submitted; (3) payment of the surcharge set forth in 37 CFR 1.20(i)(2). This petition lacks a signature of the assignee of the entire interest, of the applicant or the attorney of record.

The petition cannot be granted at this time since a review of the record discloses that the petitioner signed the petition as the director/company secretary of the assignee Think Analytics, LTD. Since it is not apparent whether the signature on the instant petition is from someone not authorized to sign a petition under 37 CFR 1.378, the statement of unintentional delay cannot be accepted at this time.

37 CFR 1.378(d) requires that any petition under 37 CFR 1.378 be signed by an attorney or agent registered to practice before the Patent and Trademark Office, or by the patentee, the assignee, or other party in interest.

If the instant petition is filed on behalf of the assignee, the petition does not comply with the requirements of 37 CFR 3.73(b). 37 CFR 3.73(b) provides that: (1) when an assignee seeks to take action in a matter before the Office, the assignee must establish its ownership of the property to the satisfaction of the Commissioner; (2) ownership is established by submitting to the Office, in the Office file related to the matter in which action is sought to be taken, documentary evidence of a chain of title from the original owner to the assignee (e.g., copy of an executed assignment submitted for recording) or by specifying (e.g., reel and frame number) where such evidence is recorded in the Office; (3) the submission establishing ownership must be signed by a party authorized to act on behalf of the assignee; and (4) documents submitted to establish ownership may be required to be recorded as a condition to permitting the assignee to take action in a matter pending before the Office. A blank Statement under 37 CFR 3.73(b) is enclosed with this decision on petition.

Petitioner will not receive future correspondence related to maintenance fees for the patent unless a "Fee Address" Indication Form (see PTO/SB/47) and Request for Customer Number (see PTO/SB/125) are submitted.

Petitioner should note that if this petition is not renewed or if renewed and not granted, then the maintenance fee and post expiration surcharge are refundable. See 37 CFR 1.378(e) and such may be obtained by written request from the Office of Finance, Refund Section, at the USPTO address listed below.

If reconsideration of this decision is desired, a petition for reconsideration under 37 CFR 1.378(e) must be filed within **TWO (2) MONTHS** from the mail date of this decision. **No extension of this two-month time limit can be granted under 37 CFR 1.136(a) or (b)**. This is **not** a final agency action within the meaning of 5 U.S.C. § 704.

Any petition for reconsideration of this decision must be accompanied by the petition fee of $400 as set forth in 37 CFR 1.17(f). The petition for reconsideration must include the lacking item(s) noted above, since, after a decision on the petition for reconsideration, no further reconsideration or review of the matter will be undertaken by the Director.

Further correspondence with respect to this matter should be addressed as follows:

By Mail:
Mail Stop PETITION
Commissioner for Patents
Post Office Box 1450
Alexandria, VA 22313-1450

By hand:
U. S. Patent and Trademark Office
Customer Service Window, Mail Stop Petitions
Randolph Building
401 Dulany Street
Alexandria, VA 22314

The centralized facsimile number is (571) 273-8300.

Telephone inquiries regarding this decision should be directed to undersigned at (571) 272-1642.

April M. Wise
Petitions Examiner
Office of Petitions

UNITED STATES PATENT AND TRADEMARK OFFICE

Commissioner for Patents
United States Patent and Trademark Office
P.O. Box 1450
Alexandria, VA 22313-1450
www.uspto.gov

IVAR M. KAARDAL
KAARDAL & ASSOCIATES, PC
3500 SOUTH FIRST AVE CIRCLE
SUITE 250
SIOUX FALLS, SD 57105-5807

MAILED

OCT 03 2011

OFFICE OF PETITIONS

In re Patent No. 6,340,195
Issue Date: January 22, 2002
Application No. 09/383,669
Filed: August 26, 1999
Patentees: Arizona Hall, et. al.

ON PETITION

This is a decision on the communication filed on July 27, 2011, which is being treated as a petition under 37 CFR 1.378(c), to accept the delayed payment of a maintenance fee for the above-identified patent.

The petition is **dismissed**.

A petition to accept the unintentionally delayed payment of a maintenance fee under 35 U.S.C. § 41(c) and 37 CFR 1.378(c) must be accompanied by: (1) a statement that the delay was unintentional; (2) payment of the appropriate maintenance fee, unless previously submitted; (3) payment of the surcharge set forth in 37 CFR 1.20(i)(2).

The petition lacks item (1) above. In this regard, a review of the record shows that petitioner submitted $1,240 for payment of the small entity 7 1/2 year maintenance fee and $1,640 for the unintentional surcharge. However, petitioner failed to include a statement that the delay was unintentional. Therefore, reinstatement cannot occur until the statement of unintentional delay has been submitted. A form for compliance with 37 CFR 1.378(C) is enclosed for petitioner's convenience.

Additionally, 37 CFR 1.378(d) states that any petition under this section must be signed by an attorney or agent registered to practice before the Patent and Trademark Office, or by the patentee, the assignee, or other party in interest.

In this case, the petition is signed by one of two joint inventors. An unsigned paper or one not properly signed by a person having authority to prosecute an application or patent is not entered. This applies, for instance, where a petition (or other paper) is signed by only one of two applicants and the one signing has not been given a power of attorney by the other.

Therefore, as the petition was not signed by all the inventors and the record herein fails to disclose that John Henry Hall was ever given a power of attorney to act on behalf of joint inventor Arizona Hall, or that John Hall is an assignee of the entire interest and has complied with the provisions of 37 CFR 3.73(b)[1], the petition filed July 27, 2007 cannot be accepted at this time.

A courtesy copy of this decision is being mailed to the addresses given in the present petition. Thereafter, all future communications regarding this patent will be mailed solely to the address of record unless otherwise instructed.

If petitioner desires to receive future correspondence regarding maintenance fees for the above patent, the enclosed "Fee Address Indication" and/or "Request for Customer Number" forms must be submitted.

If reconsideration of this decision is desired, a petition for reconsideration under 37 CFR 1.378(e) must be filed within **TWO (2) MONTHS** from the mail date of this decision. No extension of this two-month time limit can be granted under 37 CFR 1.136(a) or (b). **Any petition for reconsideration of this decision must be accompanied by the petition fee of $400 as set forth in 37 CFR 1.17(f)**. The petition for reconsideration must include the lacking item(s) noted above, since, after a decision on the petition for reconsideration, no further reconsideration or review of the matter will be undertaken by the Commissioner. This is **not** a final agency action within the meaning of 5 U.S.C. § 704.

Further correspondence with respect to this matter should be addressed as follows:

By mail:
Mail Stop PETITION
Commissioner for Patents
Post Office Box 1450
Alexandria, VA 22313-1450

By hand:
U.S. Patent and Trademark Office
Customer Service Window, Mail Stop Petitions
Randolph Building
401 Dulany Street
Alexandria, VA 22314

The centralized facsimile number is (571) 273-8300.

[1]37 CFR 3.73(b) provides that: (1) when an assignee seeks to take action in a matter before the Office, the assignee must establish its ownership of the property to the satisfaction of the Commissioner; (2) ownership is established by submitting to the Office, in the Office file related to the matter in which action is sought to be taken, documentary evidence of a chain of title from the original owner to the assignee (e.g., copy of an executed assignment submitted for recording) or by specifying (e.g., reel and frame number) where such evidence is recorded in the Office; (3) the submission establishing ownership must be signed by a party authorized to act on behalf of the assignee; and (4) documents submitted to establish ownership may be required to be recorded as a condition to permitting the assignee to take action in a matter pending before the Office.

If petitioner does not wish to pursue reinstatement of this expired patent, petitioner may request a refund of the $1,240 maintenance fee and the $1,640 surcharge submitted with the petition. The request should be made in writing and addressed to: Mail Stop 16, Director of the U.S. Patent and Trademark Office, P. O. Box 1450, Alexandria, VA 22313-1450. A copy of this decision should accompany petitioner's request.

Telephone inquiries should be directed to the undersigned at (571) 272-3226.

Andrea Smith
Petitions Examiner
Office of Petitions

Enclosure: Petition to Accept Unintentionally Delayed Payment of Maintenance Fee in an Expired Patent 37 CFR 1.378(c) – Form PTO/SB/66; Privacy Act Statement; Fee Address Indication Form – PTO/SB/47; Request for Customer Number Form – PTO/SB/125

cc: Arizona Hall
2006 Norma Avenue
St. Louis, MO 63138

John Henry Hall
1937 Madison Street
Gary, IN 46407

UNITED STATES PATENT AND TRADEMARK OFFICE

Commissioner for Patents
United States Patent and Trademark Office
P.O. Box 1450
Alexandria, VA 22313-1450
www.uspto.gov

BRAD M. BEHAR & ASSOCIATES, PLLC
94 SECOND STREET
MINEOLA, NY 11501

MAILED
APR 28 2011
OFFICE OF PETITIONS

In re Patent No. 6,347,229 :
Issue Date: February 12, 2002 :
Application No. 09/383,812 : ON PETITION
Filed: August 26, 1999 :
Attorney Docket No. 10008/0026 :

This is a decision in response to the renewed petition filed March 14, 2011 and supplemented on March 18, 2011, under 37 CFR 1.378(c), to accept the unintentionally delayed payment of a maintenance fee for the above-identified patent.

The petition is **GRANTED**.

This patent expired on February 12, 2010, for failure to pay the 7 ½ year maintenance fee. . On December 6, 2010, a petition under 37 CFR 1.378(c) was filed, however; the petition was dismissed on January 14, 2011. The renewed petition filed herein, satisfies the requirements of 37 CFR 1.378(d). Since this petition was submitted within twenty-four months after the six-month grace period provided in 37 CFR 1.362(e), the petition was timely filed under the provisions of 37 CFR 1.378(c).

Accordingly, the maintenance fee is hereby accepted and the above-identified patent is reinstated as of the mail date of this decision.

It is not apparent whether the person signing the statement of unintentional delay was in a position to have firsthand or direct knowledge of the facts and circumstances of the delay at issue. Nevertheless, such statement is being treated as having been made as the result of a reasonable inquiry into the facts and circumstances of such delay. In the event that such an inquiry has not been made, petitioner must make such an inquiry. If such inquiry results in the discovery that the delay in paying the maintenance fee under 37 CFR 1.378(c) was intentional, petitioner must notify the Office.
The patent file is being forwarded to Files Repository.

The Revocation and Power of Attorney filed on March 18, 2011 is hereby accepted and made of record. However, petitioner should also note that the mere filing of a power of attorney and/or a change of correspondence address will not affect the fee address. Therefore, if petitioner desires to receive future correspondence regarding any Maintenance Fee Reminder which may be mailed regarding maintenance fees for the above-identified patent the "Fee Address" Indication Form (see PTO/SB/47) and Request for Customer Number (see PTO/SB/125) should be submitted.

A courtesy copy of this decision is being mailed to the address given on the petition; however, the Office will mail all future correspondence solely to the address of record.

Telephone inquiries concerning this decision should be directed to the undersigned at (571) 272-6059.

Alicia Kelley
Petitions Examiner
Office of Petitions

cc: VICTOR ZELMANOVICH
INTECH 21, INC.
21 HARBOR PARK DRIVE NORTH
PORT WASHINGTON, NY 11050

UNITED STATES PATENT AND TRADEMARK OFFICE

Commissioner for Patents
United States Patent and Trademark Office
P. O. Box 1450
Alexandria, VA 22313-1450
www. uspto. gov

PILLSBURY WINTHROP SHAW PITTMAN LLP
P.O. BOX 10500
MCLEAN, VA 22102

MAILED

JAN 11 2011

OFFICE OF PETITIONS

In re Patent No. 6,709,654 :
Issue Date: March 23, 2004 :
Application No. 09/383,916 : NOTICE
Filed: August 26, 1999 :
Attorney Docket No. 012712-792

This is a notice regarding your request for acceptance of a fee deficiency submission under 37 CFR 1.28. On September 1, 1998, the Court of Appeals for the Federal Circuit held that 37 CFR 1.28(c) is the sole provision governing the time for correction of the erroneous payment of the issue fee as a small entity. **See DH Technology v. Synergystex International, Inc. 154 F.3d 1333, 47 USPQ2d 1865 (Fed. Cir. Sept. 1, 1998).**

The Office no longer investigates or rejects original or reissue applications under 37 CFR 1.56. **1098 Off. Gaz. Pat. Office 502 (January 3, 1989)**. Therefore, nothing in this Notice is intended to imply that an investigation was done.

Your fee deficiency submission under 37 CFR 1.28 is hereby **ACCEPTED**.

Inquiries related to this communication should be directed to Irvin Dingle at (571) 272-3210.

Irvin Dingle
Petitions Examiner
Office of Petitions

UNITED STATES PATENT AND TRADEMARK OFFICE

Commissioner for Patents
United States Patent and Trademark Office
P.O. Box 1450
Alexandria, VA 22313-1450
www.uspto.gov

DAVID M MUNDT
COOK ALEX MCFARRON MANZO CUMMINGS & MEHLER LTD
200 WEST ADAMS
SUITE 2850
CHICAGO IL 60606

MAILED
MAR 29 2012
OFFICE OF PETITIONS

In re Patent No. 6,675,002	:	
Issued: January 6, 2004	:	
Application No. 09/384,723	:	ON PETITION
Filed: August 27, 1999	:	
Attorney Docket No. L0032	:	

This is a decision on the petition under 37 CFR 1.378(c), filed February 10, 2012 and the Supplemental petition filed March 23, 2012, to accept the delayed payment of a maintenance fee for the above-identified patent.

The petition is **GRANTED**.

This patent expired on January 7, 2012 for failure to pay the seven and one-half year maintenance fee. Since this petition was submitted within twenty-four months after the six-month grace period provided in 37 CFR 1.362(e), the petition was timely filed under the provisions of 37 CFR 1.378(c).

The maintenance fee is hereby accepted and the above-identified patent is reinstated as of the mail date of this decision.

Additionally, the file does not indicate a change of address has been submitted, although the address given on the petition differs from the address of record. If appropriate, a request to change the address of record should be filed. Petitioner should note that a change of correspondence address would not affect the fee address. Therefore, if petitioner desires to receive future correspondence, which **may** be mailed regarding maintenance fees for the above-identified patent, the "fee address" and/or "customer number" forms should be submitted. A courtesy copy of this decision is being mailed to the address given on the petition; however, the Office will mail all future correspondence solely to the address of record.

Telephone inquiries concerning this decision should be directed to the undersigned at (571) 272-7751.

/Joan Olszewski/
Joan Olszewski
Petitions Examiner
Office of Petitions

cc: Gerald John (Jack) Lipovski
15017 Calaveras Drive
Austin, TX 78717

UNITED STATES PATENT AND TRADEMARK OFFICE

Commissioner for Patents
United States Patent and Trademark Office
P.O. Box 1450
Alexandria, VA 22313-1450
www.uspto.gov

In re Patent No. 6175514
Issue Date: January 16,2001
Application No. 09384810
Filed: August 27,1999
Attorney Docket No. 4391

:
:DECISION GRANTING PETITION
:UNDER 37 CFR 1.378(c)
:

This is a decision on the electronic petition, filed October 4,2010 ,under 37 CFR 1.378(c) to accept the unintentionally delayed payment of the 7.5 year maintenance fee for the above-identified patent.

The petition is **GRANTED**.

The maintenance fee is accepted, and the above-identified patent reinstated as of October 4,2010 .
This decision also constitutes notice that the fee has been accepted. An electronic copy of the petition and this decision has been created as an entry in the Image File Wrapper. Nevertheless, petitioner should print and retain an independent copy.

Telephone inquiries related to this electronic decision should be directed to the Electronic Business Center at 1-866-217-9197.

PTO/SB/66 (03-09)
Approved for use through 03/31/2012. OMB 0651-0016
U.S. Patent and Trademark Office: U.S. DEPARTMENT OF COMMERCE
Under the Paperwork Reduction Act of 1995, no persons are required to respond to a collection of information unless it displays valid OMB control number.

PETITION TO ACCEPT UNINTENTIONALLY DELAYED PAYMENT OF MAINTENANCE FEE IN AN EXPIRED PATENT (37 CFR 1.378(c))

Patent Number	Issue Date (YYYY-MM-DD)	Application Number	Filing Date (YYYY-MM-DD)	Docket Number (if applicable)
6175514	2001-01-16	09384810	1999-08-27	4391

CAUTION: Maintenance fee (and surcharge, if any) payment must correctly identify: (1) the patent number and (2) the application number of the actual U.S. application leading to issuance of that patent to ensure the fee(s) is/are associated with the correct patent. 37 CFR 1.366(c) and (d).

SMALL ENTITY

☐ Patentee claims, or has previously claimed, small entity status. See 37 CFR 1.27.

LOSS OF ENTITLEMENT TO SMALL ENTITY STATUS

☐ Patentee is no longer entitled to small entity status. See 37 CFR 1.27(g)

NOT Small Entity			Small Entity		
	Fee	Code		Fee	Code
○	3 ½ year	(1551)	○	3 ½ year	(2551)
◉	7 ½ year	(1552)	○	7 ½ year	(2552)
○	11 ½ year	(1553)	○	11 ½ year	(2553)

SURCHARGE

The surcharge required by 37 CFR 1.20(i)(2) (Fee Code 1558) must be paid as a condition of accepting unintentionally delayed payment of the maintenance fee.

MAINTENANCE FEE (37 CFR 1.20(e)-(g))

The appropriate maintenance fee must be submitted with this petition.

STATEMENT

THE UNDERSIGNED CERTIFIES THAT THE DELAY IN PAYMENT OF THE MAINTENANCE FEE TO THIS PATENT WAS UNINTENTIONAL

PETITIONER(S) REQUEST THAT THE DELAYED PAYMENT OF THE MAINTENANCE FEE BE ACCEPTED AND THE PATENT REINSTATED

THIS PORTION MUST BE COMPLETED BY THE SIGNATORY OR SIGNATORIES

37 CFR 1.378(d) states: "Any petition under this section must be signed by an attorney or agent registered to practice before the Patent and Trademark Office, or by the patentee, the assignee, or other party in interest."

I certify, in accordance with 37 CFR 1.4(d)(4) that I am

◉ An attorney or agent registered to practice before the Patent and Trademark Office

○ A sole patentee

○ A joint patentee; I certify that I am authorized to sign this submission on behalf of all the other patentees.

○ A joint patentee; all of whom are signing this e-petition

○ The assignee of record of the entire interest

PTO/SB/66 (03-09)
Approved for use through 03/31/2012. OMB 0651-0016
U.S. Patent and Trademark Office: U.S. DEPARTMENT OF COMMERCE
Under the Paperwork Reduction Act of 1995, no persons are required to respond to a collection of information unless it displays valid OMB control number.

Patent Practitioner			
A signature of the applicant or representative is required in accordance with 37 CFR 1.33 and 10.18. Please see 37 CFR 1.4(d) for the form of the signature			
Signature	/Kendal M. Sheets/	Date (YYYY-MM-DD)	2010-09-30
Name	Kendal M. Sheets	Registration Number	47077

This collection of information is required by 37 CFR 1.378(c). The information is required to obtain or retain a benefit by the public which is to file (and by the USPTO to process) an application. Confidentiality is governed by 35 U.S.C. 122 and 37 CFR 1.11 and 1.14. This collection is estimated to take 1 hour to complete, including gathering, preparing, and submitting the completed application form to the USPTO. Time will vary depending upon the individual case. Any comments on the amount of time you require to complete this form and/ or suggestions for reducing this burden, should be sent to the Chief Information Officer, U.S. Patent and Trademark Office, U.S. Department of Commerce, P.O. Box 1450, Alexandria, VA 22313-1450. DO NOT SEND FEES OR COMPLETED FORMS TO THIS ADDRESS. **This form can only be used when in conjunction with EFS-Web. If this form is mailed to the USPTO, it may cause delays in reinstating the patent.**

Privacy Act Statement

The Privacy Act of 1974 (P.L. 93-579) requires that you be given certain information in connection with your submission of the attached form related to a patent application or patent. Accordingly, pursuant to the requirements of the Act, please be advised that: (1) the general authority for the collection of this information is 35 U.S.C. 2(b)(2); (2) furnishing of the information solicited is voluntary; and (3) the principal purpose for which the information is used by the U.S. Patent and Trademark Office is to process and/or examine your submission related to a patent application or patent. If you do not furnish the requested information, the U.S. Patent and Trademark Office may not be able to process and/or examine your submission, which may result in termination of proceedings or abandonment of the application or expiration of the patent.

The information provided by you in this form will be subject to the following routine uses:

1. The information on this form will be treated confidentially to the extent allowed under the Freedom of Information Act (5 U.S.C. 552) and the Privacy Act (5 U.S.C. 552a). Records from this system of records may be disclosed to the Department of Justice to determine whether the Freedom of Information Act requires disclosure of these records.

2. A record from this system of records may be disclosed, as a routine use, in the course of presenting evidence to a court, magistrate, or administrative tribunal, including disclosures to opposing counsel in the course of settlement negotiations.

3. A record in this system of records may be disclosed, as a routine use, to a Member of Congress submitting a request involving an individual, to whom the record pertains, when the individual has requested assistance from the Member with respect to the subject matter of the record.

4. A record in this system of records may be disclosed, as a routine use, to a contractor of the Agency having need for the information in order to perform a contract. Recipients of information shall be required to comply with the requirements of the Privacy Act of 1974, as amended, pursuant to 5 U.S.C. 552a(m).

5. A record related to an International Application filed under the Patent Cooperation Treaty in this system of records may be disclosed, as a routine use, to the International Bureau of the World Intellectual Property Organization, pursuant to the Patent Cooperation Treaty.

6. A record in this system of records may be disclosed, as a routine use, to another federal agency for purposes of National Security review (35 U.S.C. 181) and for review pursuant to the Atomic Energy Act (42 U.S.C. 218(c)).

7. A record from this system of records may be disclosed, as a routine use, to the Administrator, General Services, or his/her designee, during an inspection of records conducted by GSA as part of that agency's responsibility to recommend improvements in records management practices and programs, under authority of 44 U.S.C. 2904 and 2906. Such disclosure shall be made in accordance with the GSA regulations governing inspection of records for this purpose, and any other relevant (i.e., GSA or Commerce) directive. Such disclosure shall not be used to make determinations about individuals.

8. A record from this system of records may be disclosed, as a routine use, to the public after either publication of the application pursuant to 35 U.S.C. 122(b) or issuance of a patent pursuant to 35 U.S.C. 151. Further, a record may be disclosed, subject to the limitations of 37 CFR 1.14, as a routine use, to the public if the record was filed in an application which became abandoned or in which the proceedings were terminated and which application is referenced by either a published application, an application open to public inspections or an issued patent.

9. A record from this system of records may be disclosed, as a routine use, to a Federal, State, or local law enforcement agency, if the USPTO becomes aware of a violation or potential violation of law or regulation.

UNITED STATES PATENT AND TRADEMARK OFFICE

Commissioner for Patents
United States Patent and Trademark Office
P.O. Box 1450
Alexandria, VA 22313-1450
www.uspto.gov

Volpe And Koenig, P.C.
Dept. AMD
United Plaza
30 South 17th Street
Philadelphia, PA 19103

MAILED
MAY 24 2011
OFFICE OF PETITIONS

In re Application of :
John S. Yates, Jr., et. al. :
Application No. 09/385,394 : DECISION ON PETITION
Filed: August 30, 1999 :
Attorney Docket No. AMD-004000 :

This is a decision on the petition under 37 CFR 1.182, filed March 24, 2011, to change the name of inventor "T. R. Ramesh" to --Tiruvur R. Ramesh--.

The petition is **GRANTED**.

Office records have been updated to reflect the inventor's change of name. A corrected Filing Receipt, which reflects the inventor's change of name, accompanies this decision on petition.

Petitioner should note that the Office action mailed November 24, 2010, required petitioner to submit a new Oath/Declaration since non-initialed and/or non-dated alterations were made to the address of Tiruvur R. Ramesh and to the name of John S. Yates, Jr. While the Office is in receipt of an Oath/Declaration, filed on March 24, 2011, correcting alterations made to the name of inventor John S. Yates Jr., no new executed Oath/Declaration correcting the alterations to the address of Tiruvur R. Ramesh has been filed.

This application is being referred to Technology Center Art Unit 2183 for review of the amendment filed on March 24, 2011.

Any questions concerning this matter may be directed to the undersigned at (571) 272-3226. Any questions concerning the examination procedures or status of the application should be directed to the Technology Center.

Andrea Smith
Petitions Examiner
Office of Petitions

ATTACHMENT: Corrected Filing Receipt

UNITED STATES PATENT AND TRADEMARK OFFICE

UNITED STATES DEPARTMENT OF COMMERCE
United States Patent and Trademark Office
Address: COMMISSIONER FOR PATENTS
P.O. Box 1450
Alexandria, Virginia 22313-1450
www.uspto.gov

APPLICATION NUMBER	FILING or 371(c) DATE	GRP ART UNIT	FIL FEE REC'D	ATTY.DOCKET.NO	TOT CLAIMS	IND CLAIMS
09/385,394	08/30/1999	2183	3972	AMD-004000	95	7

CONFIRMATION NO. 9093

CORRECTED FILING RECEIPT

25310
VOLPE AND KOENIG, P.C.
DEPT. AMD
UNITED PLAZA
30 SOUTH 17TH STREET
PHILADELPHIA, PA 19103

OC000000047784737

Date Mailed: 05/20/2011

Receipt is acknowledged of this non-provisional patent application. The application will be taken up for examination in due course. Applicant will be notified as to the results of the examination. Any correspondence concerning the application must include the following identification information: the U.S. APPLICATION NUMBER, FILING DATE, NAME OF APPLICANT, and TITLE OF INVENTION. Fees transmitted by check or draft are subject to collection. Please verify the accuracy of the data presented on this receipt. **If an error is noted on this Filing Receipt, please submit a written request for a Filing Receipt Correction. Please provide a copy of this Filing Receipt with the changes noted thereon. If you received a "Notice to File Missing Parts" for this application, please submit any corrections to this Filing Receipt with your reply to the Notice. When the USPTO processes the reply to the Notice, the USPTO will generate another Filing Receipt incorporating the requested corrections**

Applicant(s)

JOHN S. YATES JR., NEEDHAM, MA;
DAVID L. REESE, WESTBOROUGH, MA;
KORBIN S. VAN DYKE, SUNOL, CA;
TIRUVUR R. RAMESH, MOUNTAIN VIEW, CA;
PAUL H. HOHENSEE, NASHUA, NH;

Power of Attorney: The patent practitioners associated with Customer Number 25310

Domestic Priority data as claimed by applicant

This application is a CIP of 09/322,443 05/28/1999 PAT 6,941,545
which is a CIP of 09/298,536 04/23/1999 ABN
which is a CIP of 09/239,194 01/28/1999 PAT 7,275,246

Foreign Applications (You may be eligible to benefit from the **Patent Prosecution Highway** program at the USPTO. Please see http://www.uspto.gov for more information.)

If Required, Foreign Filing License Granted: 09/21/1999

The country code and number of your priority application, to be used for filing abroad under the Paris Convention, is **US 09/385,394**

Projected Publication Date: None, application is not eligible for pre-grant publication

Non-Publication Request: No

Early Publication Request: No

Title

COMPUTER WITH TWO EXECUTION MODES

Preliminary Class

712

PROTECTING YOUR INVENTION OUTSIDE THE UNITED STATES

Since the rights granted by a U.S. patent extend only throughout the territory of the United States and have no effect in a foreign country, an inventor who wishes patent protection in another country must apply for a patent in a specific country or in regional patent offices. Applicants may wish to consider the filing of an international application under the Patent Cooperation Treaty (PCT). An international (PCT) application generally has the same effect as a regular national patent application in each PCT-member country. The PCT process **simplifies** the filing of patent applications on the same invention in member countries, but **does not result** in a grant of "an international patent" and does not eliminate the need of applicants to file additional documents and fees in countries where patent protection is desired.

Almost every country has its own patent law, and a person desiring a patent in a particular country must make an application for patent in that country in accordance with its particular laws. Since the laws of many countries differ in various respects from the patent law of the United States, applicants are advised to seek guidance from specific foreign countries to ensure that patent rights are not lost prematurely.

Applicants also are advised that in the case of inventions made in the United States, the Director of the USPTO must issue a license before applicants can apply for a patent in a foreign country. The filing of a U.S. patent application serves as a request for a foreign filing license. The application's filing receipt contains further information and guidance as to the status of applicant's license for foreign filing.

Applicants may wish to consult the USPTO booklet, "General Information Concerning Patents" (specifically, the section entitled "Treaties and Foreign Patents") for more information on timeframes and deadlines for filing foreign patent applications. The guide is available either by contacting the USPTO Contact Center at 800-786-9199, or it can be viewed on the USPTO website at http://www.uspto.gov/web/offices/pac/doc/general/index.html.

For information on preventing theft of your intellectual property (patents, trademarks and copyrights), you may wish to consult the U.S. Government website, http://www.stopfakes.gov. Part of a Department of Commerce initiative, this website includes self-help "toolkits" giving innovators guidance on how to protect intellectual property in specific countries such as China, Korea and Mexico. For questions regarding patent enforcement issues, applicants may call the U.S. Government hotline at 1-866-999-HALT (1-866-999-4158).

LICENSE FOR FOREIGN FILING UNDER

Title 35, United States Code, Section 184

Title 37, Code of Federal Regulations, 5.11 & 5.15

GRANTED

The applicant has been granted a license under 35 U.S.C. 184, if the phrase "IF REQUIRED, FOREIGN FILING LICENSE GRANTED" followed by a date appears on this form. Such licenses are issued in all applications where the conditions for issuance of a license have been met, regardless of whether or not a license may be required as

set forth in 37 CFR 5.15. The scope and limitations of this license are set forth in 37 CFR 5.15(a) unless an earlier license has been issued under 37 CFR 5.15(b). The license is subject to revocation upon written notification. The date indicated is the effective date of the license, unless an earlier license of similar scope has been granted under 37 CFR 5.13 or 5.14.

This license is to be retained by the licensee and may be used at any time on or after the effective date thereof unless it is revoked. This license is automatically transferred to any related applications(s) filed under 37 CFR 1.53(d). This license is not retroactive.

The grant of a license does not in any way lessen the responsibility of a licensee for the security of the subject matter as imposed by any Government contract or the provisions of existing laws relating to espionage and the national security or the export of technical data. Licensees should apprise themselves of current regulations especially with respect to certain countries, of other agencies, particularly the Office of Defense Trade Controls, Department of State (with respect to Arms, Munitions and Implements of War (22 CFR 121-128)); the Bureau of Industry and Security, Department of Commerce (15 CFR parts 730-774); the Office of Foreign AssetsControl, Department of Treasury (31 CFR Parts 500+) and the Department of Energy.

NOT GRANTED

No license under 35 U.S.C. 184 has been granted at this time, if the phrase "IF REQUIRED, FOREIGN FILING LICENSE GRANTED" DOES NOT appear on this form. Applicant may still petition for a license under 37 CFR 5.12, if a license is desired before the expiration of 6 months from the filing date of the application. If 6 months has lapsed from the filing date of this application and the licensee has not received any indication of a secrecy order under 35 U.S.C. 181, the licensee may foreign file the application pursuant to 37 CFR 5.15(b).

SPE RESPONSE FOR CERTIFICATE OF CORRECTION

DATE : February 7, 2012

TO SPE OF : ART UNIT 2183
SUBJECT : Request for Certificate of Correction for Appl. No.: 09/385394, Patent No.: 8074055 B1

Co f C mailroom date: 1-10-12

Please respond to this request for a certificate of correction within 7 days.

FOR IFW FILES:

Please review the requested changes/corrections as shown in the **COCIN** document(s) in the IFW application image. No new matter should be introduced, nor should the scope or meaning of the claims be changed.

Please complete the response (see below) and forward the completed response to scanning using document code **COCX**.

FOR PAPER FILES:

Please review the requested changes/corrections as shown in the attached certificate of correction. Please complete this form (see below) and forward it with the file to:

Certificates of Correction Branch (CofC)
Randolph Square – 9D10-A
Palm Location 7580

Note: _____

_____

Magdalene Talley
Certificates of Correction Branch
571-272-0423 _____

Thank You For Your Assistance

The request for issuing the above-identified correction(s) is hereby:
Note your decision on the appropriate box.

☐ **Approved**	**All** changes apply.
xApproved in Part	Specify below which changes **do not** apply.
☐ **Denied**	State the reasons for denial below.

Comments: The requested changes concerning: claim 1, col. 102, line 8; claim 1, col. 102, line 12; claim 13, col. 103, lines 16-17; claim 15, col. 103, line 40; and claim 27, col. 106, line 2 are hereby approved.

The changes to claim 34, at column 107 are hereby denied because there is an ambiguity as to exactly where insert (LINE 51) should occur within the claim. The ambiguity arises because the typeset line number in the patent sits half way between two lines, and because the lines of the claim do not mesh properly with the typeset line number. /Eddie P. Chan/ SPE ASU 2183

PTO/SB/66 (03-09)
Approved for use through 03/31/2012. OMB 0651-0016
U.S. Patent and Trademark Office: U.S. DEPARTMENT OF COMMERCE
Under the Paperwork Reduction Act of 1995, no persons are required to respond to a collection of information unless it displays valid OMB control number.

PETITION TO ACCEPT UNINTENTIONALLY DELAYED PAYMENT OF MAINTENANCE FEE IN AN EXPIRED PATENT (37 CFR 1.378(c))

Patent Number	Issue Date (YYYY-MM-DD)	Application Number	Filing Date (YYYY-MM-DD)	Docket Number (if applicable)
6238662	2001-05-29	09385707	1999-08-30	300.012 (new)

CAUTION: Maintenance fee (and surcharge, if any) payment must correctly identify: (1) the patent number and (2) the application number of the actual U.S. application leading to issuance of that patent to ensure the fee(s) is/are associated with the correct patent. 37 CFR 1.366(c) and (d).

SMALL ENTITY

☒ Patentee claims, or has previously claimed, small entity status. See 37 CFR 1.27.

LOSS OF ENTITLEMENT TO SMALL ENTITY STATUS

☐ Patentee is no longer entitled to small entity status. See 37 CFR 1.27(g)

NOT Small Entity	Fee	Code	Small Entity	Fee	Code
◯	3 ½ year	(1551)	◯	3 ½ year	(2551)
◯	7 ½ year	(1552)	◉	7 ½ year	(2552)
◯	11 ½ year	(1553)	◯	11 ½ year	(2553)

SURCHARGE

The surcharge required by 37 CFR 1.20(i)(2) (Fee Code 1558) must be paid as a condition of accepting unintentionally delayed payment of the maintenance fee.

MAINTENANCE FEE (37 CFR 1.20(e)-(g))

The appropriate maintenance fee must be submitted with this petition.

STATEMENT

THE UNDERSIGNED CERTIFIES THAT THE DELAY IN PAYMENT OF THE MAINTENANCE FEE TO THIS PATENT WAS UNINTENTIONAL

PETITIONER(S) REQUEST THAT THE DELAYED PAYMENT OF THE MAINTENANCE FEE BE ACCEPTED AND THE PATENT REINSTATED

THIS PORTION MUST BE COMPLETED BY THE SIGNATORY OR SIGNATORIES

37 CFR 1.378(d) states: "Any petition under this section must be signed by an attorney or agent registered to practice before the Patent and Trademark Office, or by the patentee, the assignee, or other party in interest."

I certify, in accordance with 37 CFR 1.4(d)(4) that I am

◉ An attorney or agent registered to practice before the Patent and Trademark Office

◯ A sole patentee

◯ A joint patentee; I certify that I am authorized to sign this submission on behalf of all the other patentees.

◯ A joint patentee; all of whom are signing this e-petition

◯ The assignee of record of the entire interest

PTO/SB/66 (03-09)
Approved for use through 03/31/2012. OMB 0651-0016
U.S. Patent and Trademark Office: U.S. DEPARTMENT OF COMMERCE
Under the Paperwork Reduction Act of 1995, no persons are required to respond to a collection of information unless it displays valid OMB control number.

Patent Practitioner			
A signature of the applicant or representative is required in accordance with 37 CFR 1.33 and 10.18. Please see 37 CFR 1.4(d) for the form of the signature			
Signature	/Evelyn A Defillo/	Date (YYYY-MM-DD)	2011-04-12
Name	Evelyn A Defillo	Registration Number	45630

This collection of information is required by 37 CFR 1.378(c). The information is required to obtain or retain a benefit by the public which is to file (and by the USPTO to process) an application. Confidentiality is governed by 35 U.S.C. 122 and 37 CFR 1.11 and 1.14. This collection is estimated to take 1 hour to complete, including gathering, preparing, and submitting the completed application form to the USPTO. Time will vary depending upon the individual case. Any comments on the amount of time you require to complete this form and/ or suggestions for reducing this burden, should be sent to the Chief Information Officer, U.S. Patent and Trademark Office, U.S. Department of Commerce, P.O. Box 1450, Alexandria, VA 22313-1450. DO NOT SEND FEES OR COMPLETED FORMS TO THIS ADDRESS. **This form can only be used when in conjunction with EFS-Web. If this form is mailed to the USPTO, it may cause delays in reinstating the patent.**

Privacy Act Statement

The Privacy Act of 1974 (P.L. 93-579) requires that you be given certain information in connection with your submission of the attached form related to a patent application or patent. Accordingly, pursuant to the requirements of the Act, please be advised that: (1) the general authority for the collection of this information is 35 U.S.C. 2(b)(2); (2) furnishing of the information solicited is voluntary; and (3) the principal purpose for which the information is used by the U.S. Patent and Trademark Office is to process and/or examine your submission related to a patent application or patent. If you do not furnish the requested information, the U.S. Patent and Trademark Office may not be able to process and/or examine your submission, which may result in termination of proceedings or abandonment of the application or expiration of the patent.

The information provided by you in this form will be subject to the following routine uses:

1. The information on this form will be treated confidentially to the extent allowed under the Freedom of Information Act (5 U.S.C. 552) and the Privacy Act (5 U.S.C. 552a). Records from this system of records may be disclosed to the Department of Justice to determine whether the Freedom of Information Act requires disclosure of these records.

2. A record from this system of records may be disclosed, as a routine use, in the course of presenting evidence to a court, magistrate, or administrative tribunal, including disclosures to opposing counsel in the course of settlement negotiations.

3. A record in this system of records may be disclosed, as a routine use, to a Member of Congress submitting a request involving an individual, to whom the record pertains, when the individual has requested assistance from the Member with respect to the subject matter of the record.

4. A record in this system of records may be disclosed, as a routine use, to a contractor of the Agency having need for the information in order to perform a contract. Recipients of information shall be required to comply with the requirements of the Privacy Act of 1974, as amended, pursuant to 5 U.S.C. 552a(m).

5. A record related to an International Application filed under the Patent Cooperation Treaty in this system of records may be disclosed, as a routine use, to the International Bureau of the World Intellectual Property Organization, pursuant to the Patent Cooperation Treaty.

6. A record in this system of records may be disclosed, as a routine use, to another federal agency for purposes of National Security review (35 U.S.C. 181) and for review pursuant to the Atomic Energy Act (42 U.S.C. 218(c)).

7. A record from this system of records may be disclosed, as a routine use, to the Administrator, General Services, or his/her designee, during an inspection of records conducted by GSA as part of that agency's responsibility to recommend improvements in records management practices and programs, under authority of 44 U.S.C. 2904 and 2906. Such disclosure shall be made in accordance with the GSA regulations governing inspection of records for this purpose, and any other relevant (i.e., GSA or Commerce) directive. Such disclosure shall not be used to make determinations about individuals.

8. A record from this system of records may be disclosed, as a routine use, to the public after either publication of the application pursuant to 35 U.S.C. 122(b) or issuance of a patent pursuant to 35 U.S.C. 151. Further, a record may be disclosed, subject to the limitations of 37 CFR 1.14, as a routine use, to the public if the record was filed in an application which became abandoned or in which the proceedings were terminated and which application is referenced by either a published application, an application open to public inspections or an issued patent.

9. A record from this system of records may be disclosed, as a routine use, to a Federal, State, or local law enforcement agency, if the USPTO becomes aware of a violation or potential violation of law or regulation.

UNITED STATES PATENT AND TRADEMARK OFFICE

Commissioner for Patents
United States Patent and Trademark Office
P.O. Box 1450
Alexandria, VA 22313-1450
www.uspto.gov

In re Patent No. 6238662
Issue Date: May 29,2001
Application No. 09385707
Filed: August 30,1999
Attorney Docket No. 8978ZYA

:
:DECISION GRANTING PETITION
:UNDER 37 CFR 1.378(c)
:

This is a decision on the electronic petition, filed April 12,2011 ,under 37 CFR 1.378(c) to accept the unintentionally delayed payment of the 7.5 year maintenance fee for the above-identified patent.

The petition is **GRANTED**.

The maintenance fee is accepted, and the above-identified patent reinstated as of April 12,2011 .
This decision also constitutes notice that the fee has been accepted. An electronic copy of the petition and this decision has been created as an entry in the Image File Wrapper. Nevertheless, petitioner should print and retain an independent copy.

Telephone inquiries related to this electronic decision should be directed to the Electronic Business Center at 1-866-217-9197.

UNITED STATES PATENT AND TRADEMARK OFFICE

Commissioner for Patents
United States Patent and Trademark Office
P.O. Box 1450
Alexandria, VA 22313-1450
www.uspto.gov

In re Patent No. 6208311
Issue Date: March 27,2001
Application No. 09387611
Filed: August 31,1999
Attorney Docket No. 245/111

:
:DECISION GRANTING PETITION
:UNDER 37 CFR 1.378(c)
:

This is a decision on the electronic petition, filed October 4,2010 ,under 37 CFR 1.378(c) to accept the unintentionally delayed payment of the 7.5 year maintenance fee for the above-identified patent.

The petition is **GRANTED**.

The maintenance fee is accepted, and the above-identified patent reinstated as of October 4,2010 .
This decision also constitutes notice that the fee has been accepted. An electronic copy of the petition and this decision has been created as an entry in the Image File Wrapper. Nevertheless, petitioner should print and retain an independent copy.

Telephone inquiries related to this electronic decision should be directed to the Electronic Business Center at 1-866-217-9197.

PTO/SB/66 (03-09)
Approved for use through 03/31/2012. OMB 0651-0016
U.S. Patent and Trademark Office: U.S. DEPARTMENT OF COMMERCE
Under the Paperwork Reduction Act of 1995, no persons are required to respond to a collection of information unless it displays valid OMB control number.

PETITION TO ACCEPT UNINTENTIONALLY DELAYED PAYMENT OF MAINTENANCE FEE IN AN EXPIRED PATENT (37 CFR 1.378(c))

Patent Number	Issue Date (YYYY-MM-DD)	Application Number	Filing Date (YYYY-MM-DD)	Docket Number (if applicable)
6208311	2001-03-27	09387611	1999-08-31	245/111

CAUTION: Maintenance fee (and surcharge, if any) payment must correctly identify: (1) the patent number and (2) the application number of the actual U.S. application leading to issuance of that patent to ensure the fee(s) is/are associated with the correct patent. 37 CFR 1.366(c) and (d).

SMALL ENTITY

☐ Patentee claims, or has previously claimed, small entity status. See 37 CFR 1.27.

LOSS OF ENTITLEMENT TO SMALL ENTITY STATUS

☐ Patentee is no longer entitled to small entity status. See 37 CFR 1.27(g)

NOT Small Entity			Small Entity		
	Fee	Code		Fee	Code
○	3 ½ year	(1551)	○	3 ½ year	(2551)
◉	7 ½ year	(1552)	○	7 ½ year	(2552)
○	11 ½ year	(1553)	○	11 ½ year	(2553)

SURCHARGE

The surcharge required by 37 CFR 1.20(i)(2) (Fee Code 1558) must be paid as a condition of accepting unintentionally delayed payment of the maintenance fee.

MAINTENANCE FEE (37 CFR 1.20(e)-(g))

The appropriate maintenance fee must be submitted with this petition.

STATEMENT

THE UNDERSIGNED CERTIFIES THAT THE DELAY IN PAYMENT OF THE MAINTENANCE FEE TO THIS PATENT WAS UNINTENTIONAL

PETITIONER(S) REQUEST THAT THE DELAYED PAYMENT OF THE MAINTENANCE FEE BE ACCEPTED AND THE PATENT REINSTATED

THIS PORTION MUST BE COMPLETED BY THE SIGNATORY OR SIGNATORIES

37 CFR 1.378(d) states: "Any petition under this section must be signed by an attorney or agent registered to practice before the Patent and Trademark Office, or by the patentee, the assignee, or other party in interest."

I certify, in accordance with 37 CFR 1.4(d)(4) that I am

◉ An attorney or agent registered to practice before the Patent and Trademark Office

○ A sole patentee

○ A joint patentee; I certify that I am authorized to sign this submission on behalf of all the other patentees.

○ A joint patentee; all of whom are signing this e-petition

○ The assignee of record of the entire interest

PTO/SB/66 (03-09)
Approved for use through 03/31/2012. OMB 0651-0016
U.S. Patent and Trademark Office: U.S. DEPARTMENT OF COMMERCE
Under the Paperwork Reduction Act of 1995, no persons are required to respond to a collection of information unless it displays valid OMB control number.

Patent Practitioner			
A signature of the applicant or representative is required in accordance with 37 CFR 1.33 and 10.18. Please see 37 CFR 1.4(d) for the form of the signature			
Signature	/Kendal M. Sheets/	Date (YYYY-MM-DD)	2010-09-30
Name	Kendal M. Sheets	Registration Number	47077

This collection of information is required by 37 CFR 1.378(c). The information is required to obtain or retain a benefit by the public which is to file (and by the USPTO to process) an application. Confidentiality is governed by 35 U.S.C. 122 and 37 CFR 1.11 and 1.14. This collection is estimated to take 1 hour to complete, including gathering, preparing, and submitting the completed application form to the USPTO. Time will vary depending upon the individual case. Any comments on the amount of time you require to complete this form and/ or suggestions for reducing this burden, should be sent to the Chief Information Officer, U.S. Patent and Trademark Office, U.S. Department of Commerce, P.O. Box 1450, Alexandria, VA 22313-1450. DO NOT SEND FEES OR COMPLETED FORMS TO THIS ADDRESS. **This form can only be used when in conjunction with EFS-Web. If this form is mailed to the USPTO, it may cause delays in reinstating the patent.**

Privacy Act Statement

The Privacy Act of 1974 (P.L. 93-579) requires that you be given certain information in connection with your submission of the attached form related to a patent application or patent. Accordingly, pursuant to the requirements of the Act, please be advised that: (1) the general authority for the collection of this information is 35 U.S.C. 2(b)(2); (2) furnishing of the information solicited is voluntary; and (3) the principal purpose for which the information is used by the U.S. Patent and Trademark Office is to process and/or examine your submission related to a patent application or patent. If you do not furnish the requested information, the U.S. Patent and Trademark Office may not be able to process and/or examine your submission, which may result in termination of proceedings or abandonment of the application or expiration of the patent.

The information provided by you in this form will be subject to the following routine uses:

1. The information on this form will be treated confidentially to the extent allowed under the Freedom of Information Act (5 U.S.C. 552) and the Privacy Act (5 U.S.C. 552a). Records from this system of records may be disclosed to the Department of Justice to determine whether the Freedom of Information Act requires disclosure of these records.

2. A record from this system of records may be disclosed, as a routine use, in the course of presenting evidence to a court, magistrate, or administrative tribunal, including disclosures to opposing counsel in the course of settlement negotiations.

3. A record in this system of records may be disclosed, as a routine use, to a Member of Congress submitting a request involving an individual, to whom the record pertains, when the individual has requested assistance from the Member with respect to the subject matter of the record.

4. A record in this system of records may be disclosed, as a routine use, to a contractor of the Agency having need for the information in order to perform a contract. Recipients of information shall be required to comply with the requirements of the Privacy Act of 1974, as amended, pursuant to 5 U.S.C. 552a(m).

5. A record related to an International Application filed under the Patent Cooperation Treaty in this system of records may be disclosed, as a routine use, to the International Bureau of the World Intellectual Property Organization, pursuant to the Patent Cooperation Treaty.

6. A record in this system of records may be disclosed, as a routine use, to another federal agency for purposes of National Security review (35 U.S.C. 181) and for review pursuant to the Atomic Energy Act (42 U.S.C. 218(c)).

7. A record from this system of records may be disclosed, as a routine use, to the Administrator, General Services, or his/her designee, during an inspection of records conducted by GSA as part of that agency's responsibility to recommend improvements in records management practices and programs, under authority of 44 U.S.C. 2904 and 2906. Such disclosure shall be made in accordance with the GSA regulations governing inspection of records for this purpose, and any other relevant (i.e., GSA or Commerce) directive. Such disclosure shall not be used to make determinations about individuals.

8. A record from this system of records may be disclosed, as a routine use, to the public after either publication of the application pursuant to 35 U.S.C. 122(b) or issuance of a patent pursuant to 35 U.S.C. 151. Further, a record may be disclosed, subject to the limitations of 37 CFR 1.14, as a routine use, to the public if the record was filed in an application which became abandoned or in which the proceedings were terminated and which application is referenced by either a published application, an application open to public inspections or an issued patent.

9. A record from this system of records may be disclosed, as a routine use, to a Federal, State, or local law enforcement agency, if the USPTO becomes aware of a violation or potential violation of law or regulation.

UNITED STATES PATENT AND TRADEMARK OFFICE

Commissioner for Patents
United States Patent and Trademark Office
P.O. Box 1450
Alexandria, VA 22313-1450
www.uspto.gov

In re Patent No. 6237047
Issue Date: May 22,2001
Application No. 09388097
Filed: August 30,1999
Attorney Docket No. 024/1

:
:DECISION GRANTING PETITION
:UNDER 37 CFR 1.378(c)
:

This is a decision on the electronic petition, filed October 4,2010 ,under 37 CFR 1.378(c) to accept the unintentionally delayed payment of the 7.5 year maintenance fee for the above-identified patent.

The petition is **GRANTED**.

The maintenance fee is accepted, and the above-identified patent reinstated as of October 4,2010 . This decision also constitutes notice that the fee has been accepted. An electronic copy of the petition and this decision has been created as an entry in the Image File Wrapper. Nevertheless, petitioner should print and retain an independent copy.

Telephone inquiries related to this electronic decision should be directed to the Electronic Business Center at 1-866-217-9197.

PTO/SB/66 (03-09)
Approved for use through 03/31/2012. OMB 0651-0016
U.S. Patent and Trademark Office: U.S. DEPARTMENT OF COMMERCE
Under the Paperwork Reduction Act of 1995, no persons are required to respond to a collection of information unless it displays valid OMB control number.

PETITION TO ACCEPT UNINTENTIONALLY DELAYED PAYMENT OF MAINTENANCE FEE IN AN EXPIRED PATENT (37 CFR 1.378(c))

Patent Number	Issue Date (YYYY-MM-DD)	Application Number	Filing Date (YYYY-MM-DD)	Docket Number (if applicable)
6237047	2001-05-22	09388097	1999-08-30	024/1

CAUTION: Maintenance fee (and surcharge, if any) payment must correctly identify: (1) the patent number and (2) the application number of the actual U.S. application leading to issuance of that patent to ensure the fee(s) is/are associated with the correct patent. 37 CFR 1.366(c) and (d).

SMALL ENTITY

☐ Patentee claims, or has previously claimed, small entity status. See 37 CFR 1.27.

LOSS OF ENTITLEMENT TO SMALL ENTITY STATUS

☐ Patentee is no longer entitled to small entity status. See 37 CFR 1.27(g)

NOT Small Entity	Fee	Code	Small Entity	Fee	Code
○	3 ½ year	(1551)	○	3 ½ year	(2551)
◉	7 ½ year	(1552)	○	7 ½ year	(2552)
○	11 ½ year	(1553)	○	11 ½ year	(2553)

SURCHARGE

The surcharge required by 37 CFR 1.20(i)(2) (Fee Code 1558) must be paid as a condition of accepting unintentionally delayed payment of the maintenance fee.

MAINTENANCE FEE (37 CFR 1.20(e)-(g))

The appropriate maintenance fee must be submitted with this petition.

STATEMENT

THE UNDERSIGNED CERTIFIES THAT THE DELAY IN PAYMENT OF THE MAINTENANCE FEE TO THIS PATENT WAS UNINTENTIONAL

PETITIONER(S) REQUEST THAT THE DELAYED PAYMENT OF THE MAINTENANCE FEE BE ACCEPTED AND THE PATENT REINSTATED

THIS PORTION MUST BE COMPLETED BY THE SIGNATORY OR SIGNATORIES

37 CFR 1.378(d) states: "Any petition under this section must be signed by an attorney or agent registered to practice before the Patent and Trademark Office, or by the patentee, the assignee, or other party in interest."

I certify, in accordance with 37 CFR 1.4(d)(4) that I am

◉ An attorney or agent registered to practice before the Patent and Trademark Office

○ A sole patentee

○ A joint patentee; I certify that I am authorized to sign this submission on behalf of all the other patentees.

○ A joint patentee; all of whom are signing this e-petition

○ The assignee of record of the entire interest

PTO/SB/66 (03-09)
Approved for use through 03/31/2012. OMB 0651-0016
U.S. Patent and Trademark Office: U.S. DEPARTMENT OF COMMERCE
Under the Paperwork Reduction Act of 1995, no persons are required to respond to a collection of information unless it displays valid OMB control number.

Patent Practitioner			
A signature of the applicant or representative is required in accordance with 37 CFR 1.33 and 10.18. Please see 37 CFR 1.4(d) for the form of the signature			
Signature	/Kendal M. Sheets/	Date (YYYY-MM-DD)	2010-09-30
Name	Kendal M. Sheets	Registration Number	47077

This collection of information is required by 37 CFR 1.378(c). The information is required to obtain or retain a benefit by the public which is to file (and by the USPTO to process) an application. Confidentiality is governed by 35 U.S.C. 122 and 37 CFR 1.11 and 1.14. This collection is estimated to take 1 hour to complete, including gathering, preparing, and submitting the completed application form to the USPTO. Time will vary depending upon the individual case. Any comments on the amount of time you require to complete this form and/ or suggestions for reducing this burden, should be sent to the Chief Information Officer, U.S. Patent and Trademark Office, U.S. Department of Commerce, P.O. Box 1450, Alexandria, VA 22313-1450. DO NOT SEND FEES OR COMPLETED FORMS TO THIS ADDRESS. **This form can only be used when in conjunction with EFS-Web. If this form is mailed to the USPTO, it may cause delays in reinstating the patent.**

Privacy Act Statement

The Privacy Act of 1974 (P.L. 93-579) requires that you be given certain information in connection with your submission of the attached form related to a patent application or patent. Accordingly, pursuant to the requirements of the Act, please be advised that: (1) the general authority for the collection of this information is 35 U.S.C. 2(b)(2); (2) furnishing of the information solicited is voluntary; and (3) the principal purpose for which the information is used by the U.S. Patent and Trademark Office is to process and/or examine your submission related to a patent application or patent. If you do not furnish the requested information, the U.S. Patent and Trademark Office may not be able to process and/or examine your submission, which may result in termination of proceedings or abandonment of the application or expiration of the patent.

The information provided by you in this form will be subject to the following routine uses:

1. The information on this form will be treated confidentially to the extent allowed under the Freedom of Information Act (5 U.S.C. 552) and the Privacy Act (5 U.S.C. 552a). Records from this system of records may be disclosed to the Department of Justice to determine whether the Freedom of Information Act requires disclosure of these records.

2. A record from this system of records may be disclosed, as a routine use, in the course of presenting evidence to a court, magistrate, or administrative tribunal, including disclosures to opposing counsel in the course of settlement negotiations.

3. A record in this system of records may be disclosed, as a routine use, to a Member of Congress submitting a request involving an individual, to whom the record pertains, when the individual has requested assistance from the Member with respect to the subject matter of the record.

4. A record in this system of records may be disclosed, as a routine use, to a contractor of the Agency having need for the information in order to perform a contract. Recipients of information shall be required to comply with the requirements of the Privacy Act of 1974, as amended, pursuant to 5 U.S.C. 552a(m).

5. A record related to an International Application filed under the Patent Cooperation Treaty in this system of records may be disclosed, as a routine use, to the International Bureau of the World Intellectual Property Organization, pursuant to the Patent Cooperation Treaty.

6. A record in this system of records may be disclosed, as a routine use, to another federal agency for purposes of National Security review (35 U.S.C. 181) and for review pursuant to the Atomic Energy Act (42 U.S.C. 218(c)).

7. A record from this system of records may be disclosed, as a routine use, to the Administrator, General Services, or his/her designee, during an inspection of records conducted by GSA as part of that agency's responsibility to recommend improvements in records management practices and programs, under authority of 44 U.S.C. 2904 and 2906. Such disclosure shall be made in accordance with the GSA regulations governing inspection of records for this purpose, and any other relevant (i.e., GSA or Commerce) directive. Such disclosure shall not be used to make determinations about individuals.

8. A record from this system of records may be disclosed, as a routine use, to the public after either publication of the application pursuant to 35 U.S.C. 122(b) or issuance of a patent pursuant to 35 U.S.C. 151. Further, a record may be disclosed, subject to the limitations of 37 CFR 1.14, as a routine use, to the public if the record was filed in an application which became abandoned or in which the proceedings were terminated and which application is referenced by either a published application, an application open to public inspections or an issued patent.

9. A record from this system of records may be disclosed, as a routine use, to a Federal, State, or local law enforcement agency, if the USPTO becomes aware of a violation or potential violation of law or regulation.

UNITED STATES PATENT AND TRADEMARK OFFICE

Commissioner for Patents
United States Patent and Trademark Office
P.O. Box 1450
Alexandria, VA 22313-1450
www.uspto.gov

BAKER & BOTTS LLP
30 ROCKEFELLER PLAZA
NEW YORK NY 10112-0228

MAILED

NOV 22 2010

OFFICE OF PETITIONS

In re Application of :
Im, et al. :
Application No. 09/390,537 : NOTICE
Filed: September 3, 1999 :
Attorney Docket No. A32616-07005 :

This is a notice regarding your request for acceptance of a fee deficiency submission under 37 CFR 1.28.

The Office no longer investigates or rejects original or reissue applications under 37 CFR 1.56. **1098 Off. Gaz. Pat. Office 502 (January 3, 1989)**. Therefore, nothing in this Notice is intended to imply that an investigation was done.

Your fee deficiency submission under 37 CFR 1.28 is hereby **ACCEPTED**.

This application is no longer entitled to small entity status. Accordingly, all future fees paid in this application must be paid at the large entity rate.

Inquiries related to this communication should be directed to the undersigned at (571) 272-3205.

/ALESIA M. BROWN/

Alesia M. Brown
Petitions Attorney
Office of Petitions

UNITED STATES PATENT AND TRADEMARK OFFICE

Commissioner for Patents
United States Patent and Trademark Office
P.O. Box 1450
Alexandria, VA 22313-1450
www.uspto.gov

MARK LAVENDER
St. Jude Medical, Atrial Fibrillation Division, In
One St. Jude Medical Drive
St. Paul, MN 55117—991

MAILED
JAN 23 2012
OFFICE OF PETITIONS

In re Patent No. 6,228,109 :
Issued: May 8, 2001 :
Application No. 09/390,951 : NOTICE
Filed: September 7, 1999 :
For: METHODS FOR TREATING :
ATHEROSCLEROSIS AND VULNERABLE :
PLAQUES :

This is a notice regarding your request for acceptance of a fee deficiency submission under 37 CFR 1.28.

The Office no longer investigates or rejects original or reissue applications under 37 CFR 1.56. **1098 Off. Gaz. Pat. Office 502 (January 3, 1989)**. Therefore, nothing in this Notice is intended to imply that an investigation was done.

Your fee deficiency submission under 37 CFR 1.28 is hereby **ACCEPTED**.

There is no indication that the petition is signed by a registered patent attorney or patent agent of record. However, in accordance with 37 CFR 1.34, practitioner's signature appearing on the correspondence shall constitute a representation to the United States Patent and Trademark Office that he is authorized to represent the particular party in whose behalf he acts. If practitioner desires to receive correspondence regarding this file, the appropriate power of attorney documents must be submitted. A courtesy copy of this decision is being mailed to practitioner, the petitioner herein. However, until otherwise instructed, all future correspondence regarding this application file will be directed solely to the correspondence address of record.

This application is no longer entitled to small entity status. Accordingly, all future fees paid in this application must be paid at the large entity rate.

Inquiries related to this communication should be directed to the undersigned at (571) 272-3205.

/ALESIA M. BROWN/

Alesia M. Brown
Attorney Advisor
Office of Petitions

UNITED STATES PATENT AND TRADEMARK OFFICE

Commissioner for Patents
United States Patent and Trademark Office
P.O. Box 1450
Alexandria, VA 22313-1450
www.uspto.gov

HAYNES AND BOONE, LLP
IP Section
2323 Victory Avenue
Suite 700
Dallas, TX 75219

MAILED
FEB 08 2011
OFFICE OF PETITIONS

In re Patent of Hermansen :
Patent No. 6,205,885 :
Issue Date: March 27, 2001 : Decision on Petition
Application No. 09/391,709 :
Filing Date: September 8, 1999 :
Attorney Docket No. 70614.30 :

This is a decision in response to the communication filed July 21, 2010, which is being treated as a petition under 37 C.F.R. § 1.183 and a petition under 37 C.F.R. § 1.378(b).

The petition under 37 C.F.R. § 1.183 is **granted**.

The petition under 37 C.F.R. § 1.378(b) is **granted**.

The Office has charged the required petition fee ($400), the required surcharge ($700), the 3.5 year maintenance fee ($490), and the 7.5 year maintenance fee ($1,240) to Deposit Account No. 08-1394.

Telephone inquiries regarding this communication should be directed to Petitions Attorney Steven Brantley at (571) 272-3203.

Charles Steven Brantley
Senior Petitions Attorney
Office of Petitions

UNITED STATES PATENT AND TRADEMARK OFFICE

Commissioner for Patents
United States Patent and Trademark Office
P.O. Box 1450
Alexandria, VA 22313-1450
www.uspto.gov
DIW Feb-11

Doron Shachar
Way2call Communications, Inc.
211 Warren Street
Newark NJ 07013

MAILED
FEB 04 2011
OFFICE OF PETITIONS

In re Patent Number: 7,061,901 :
Issue Date: 06/13/2006 : ON PETITION
Application Number: 09/392,668 :
Filing Date: 09/07/1999 :
For: DATA NETWORK AND PSTN :
TELEPHONY SYSTEM :

This is a letter in reference to the petition under 37 CFR 1.378(c), filed on October 15, 2010, to accept the unintentionally delayed payment of a maintenance fee for the above-identified patent.

37 CFR 1.378(d) states that any petition under this section must be signed by an attorney or agent registered to practice before the U.S. Patent and Trademark Office, or by the patentee, the assignee, or other party in interest.

The petition form has been signed by Doron Shachar. However, petitioners have not provided sufficient proof that the person signing the petition, Doron Shachar, is authorized to act on behalf of the assignee.

MPEP 2590, states, in pertinent part:

> Any petition under 37 CFR 1.378 must be signed by an attorney or agent registered to practice before the U.S. Patent and Trademark Office, or by the patentee, the assignee, or other party in interest. A person or organization whose only responsibility insofar as the patent is concerned is the payment of a maintenance fee is not a party in interest for purposes of 37 CFR 1.378. If the petition is signed by a person not registered to practice before the Office, the petition must indicate that the person signing the petition is

the patentee, assignee, or other party in interest. An assignee must comply with the requirements of 37 CFR 3.73(b) which is discussed in MPEP § 324.

MPEP 324 states, in pertinent part:

> The submission establishing ownership must be signed by a party authorized to act on behalf of the assignee. The submission under 37 CFR 3.73(b) may be signed on behalf of the assignee in the following manner if the assignee is an organization (e.g., corporation, partnership, university, government agency, etc.):
>
> (A) The submission may be signed by a person in the organization having apparent authority to sign on behalf of the organization. 37 CFR 3.73(b)(2)(ii). An officer (chief executive officer, president, vice-president, secretary, or treasurer) is presumed to have authority to sign on behalf of the organization. The signature of the chairman of the board of directors is acceptable, but not the signature of an individual director. Modifications of these basic titles are acceptable, such as vice-president for sales, executive vice-president, assistant treasurer, vice-chairman of the board of directors. In foreign countries, a person who holds the title "Manager" or "Director" is normally an officer and is presumed to have the authority to sign on behalf of the organization. A person having a title (administrator, general counsel) that does not clearly set forth that person as an officer of the assignee is not presumed to have authority to sign the submission on behalf of the assignee. A power of attorney (37 CFR 1.32(b)(4)) to a patent practitioner to prosecute a patent application executed by the applicant or the assignee of the entire interest does not make that practitioner an official of an assignee or empower the practitioner to sign the submission on behalf of the assignee.
>
> (B) The submission may be signed by any person, if the submission sets forth that the person signing is authorized (or empowered) to act on behalf of the assignee, i.e., to sign the submission on behalf of the assignee. 37 CFR 3.73(b)(2)(i).
>
> (C) The submission may be signed by a person empowered by an organizational resolution (e.g., corporate

resolution, partnership resolution) to sign the submission on behalf of the assignee, if a copy of the resolution is, or was previously, submitted in the record.

Where a submission does not comply with (A), (B), or (C) above, evidence of the person's authority to sign will be required.

It is recommended that the person with authority to bind the corporation complete and sign the attached Statement Under 37 CFR 3.73(b) and submit it, along with a new petition form.

No additional fees are due.

A reply to this communication should be submitted within ONE (1) MONTH of receipt of this communication. This time period may not be extended. See 37 CFR 1.181.

Additionally, the Office notes that the address indicated on the petition differs from the address of record. As a one-time courtesy the Office will mail this communication to the address listed in the petition. However, if petitioners wish to receive future correspondence concerning this patent, petitioners should submit a change of correspondence address. The appropriate form (Form PTO/SB/123) accompanies this decision for petitioners' convenience.

Further correspondence with respect to this matter should be addressed as follows:

By mail: Mail Stop PETITIONS
Commissioner for Patents
Post Office Box 1450
Alexandria, VA 22313-1450

By hand: Customer Service Window
Mail Stop Petitions
Randolph Building
401 Dulany Street
Alexandria, VA 22314

By fax: (571) 273-8300
ATTN: Office of Petitions

Correspondence may also be submitted electronically via the Electronic Filing System - EFS Web.

Telephone inquiries related to this decision should be directed to the undersigned at (571) 272-3211.

C. T. Donnell

Christina Tartera Donnell
Senior Petitions Attorney
Office of Petitions

Cc: MARTIN D. MOYNIHAN
PRTSI, INC.
P.O. Box 16423
ARLINGTON VA 22215

Encl: PTO/SB/66
PTO/SB/96
PTO/SB/123

UNITED STATES PATENT AND TRADEMARK OFFICE

Commissioner for Patents
United States Patent and Trademark Office
P.O. Box 1450
Alexandria, VA 22313-1450
www.uspto.gov

HOGAN LOVELLS US LLP
1999 AVENUE OF THE STARS
SUITE 1400
LOS ANGELES, CA 90067

MAILED

JUL 06 2011

OFFICE OF PETITIONS

In re Patent No. 6,298,182
Issue Date: October 2, 2001
Application No. 09/392,670
Filed: September 8, 1999
Attorney Docket No. 34013-00025

ON PETITION

This is a decision in response to a petition filed June 2, 2011, under 37 CFR 1.378(c), to accept the unintentionally delayed payment of a maintenance fee for the above-identified patent.

The petition is **GRANTED**.

This patent expired on October 3, 2009, for failure to pay the 7 ½ year maintenance fee. Since this petition was submitted within twenty-four months after the six-month grace period provided in 37 CFR 1.362(e), the petition was timely filed under the provisions of 37 CFR 1.378(c).

It is not apparent whether the person signing the statement of unintentional delay was in a position to have firsthand or direct knowledge of the facts and circumstances of the delay at issue. Nevertheless, such statement is being treated as having been made as the result of a reasonable inquiry into the facts and circumstances of such delay. In the event that such an inquiry has not been made, petitioner must make such an inquiry. If such inquiry results in the discovery that the delay in paying the maintenance fee under 37 CFR 1.378(c) was intentional, petitioner must notify the Office.

A courtesy copy of this decision is being mailed to the person signing the petition, all future correspondence will be directed to the address currently of record until appropriate instructions are received.

The maintenance fee is hereby accepted and the above-identified patent is reinstated as of the mail date of this decision.

Telephone inquiries concerning this decision should be directed to the undersigned at (571) 272-6059.

A. Kelley-Collier

Alicia Kelley-Collier
Petitions Examiner
Office of Petitions

cc: KEVIN SHAW
555 THIRTEENTH ST. NW
WASHINGTON, DC 20004

UNITED STATES PATENT AND TRADEMARK OFFICE

Commissioner for Patents
United States Patent and Trademark Office
P.O. Box 1450
Alexandria, VA 22313-1450
www.uspto.gov

CHARLES M. LEEDOM, JR.
6524 TRUMAN LANE
FALLS CHURCH VA 22043

MAILED

OCT 25 2010

OFFICE OF PETITIONS

In re Patent No. RE38,787 :
Issued: August 30, 2005 :
Reissue of Patent No. 5,761,621 : ON PETITION
Issued: June 2, 1998 :
Application No. 09/392,676 :
Filed: September 8, 1999
Attorney Docket No. 740301-411

This is a decision on the petition, filed June 10, 2010, which is being treated under 37 CFR 1.377 as a petition to accept and record the 11 ½ year maintenance fee for the above-identified patent.

The petition is **dismissed**.

Any request for reconsideration of this decision must be submitted within TWO (2) MONTHS from the mail date of this decision. Extensions of time under 37 CFR 1.136(a) are permitted.

The patent upon which the above-identified reissue patent was based, Patent No. 5,761,621, issued on June 2, 1998. The first maintenance fee (3 ½ year) on Patent No. 5,761,621 was paid timely on November 6, 2001. On August 30, 2005, Reissue Patent No. RE38,787 was issued. The time table for payment of maintenance fees for a reissue patent is the same as the time table for payment of the original patent upon which the reissue patent was based. The second maintenance fee (7 ½ year) on Reissue Patent No. RE38,787 was paid timely on November 11, 2005.

As explained in the NOTICE OF NON-ACCEPTANCE OF PATENT MAINTENANCE FEE, mailed June 4, 2010, the Office received a credit card authorization to charge the 11 ½ year maintenance fee and surcharge for RE38,787 on June 2, 2010. However, the Office did not accept the payment because the Office erroneously asserted the above-identified patent was reissued.

The Office should have accepted the timely paid 11 ½ year maintenance fee and surcharge for RE38,787 because it was never surrendered.

Unfortunately, the two new Credit Card Payment Forms (Form PTO-2038) submitted with the present petition were redacted before payment was collected. The petition cannot be granted until the Office receives the $4,110.00 11 ½ year maintenance fee, the $130.00 grace period

surcharge, and the $200.00 petition fee. Petitioner's request for refund of the petition fee in the present petition is noted and will be acted upon once payment is received.

Further correspondence with respect to this matter should be delivered through one of the following mediums:

By mail:	Mail Stop PETITIONS Commissioner for Patents Post Office Box 1450 Alexandria, VA 22313-1450
By hand:	Customer Service Window Mail Stop Petitions Randolph Building 401 Dulany Street Alexandria, VA 22314
By fax:	(571) 273-8300 ATTN: Office of Petitions
By internet:	EFS-Web www.uspto.gov/ebc/efs_help.html (for help using EFS-Web call the Patent Electronic Business Center at (866) 217-9197)

Telephone inquiries concerning this decision should be directed to the undersigned at (571) 272-3230.

Shirene Willis Brantley

Shirene Willis Brantley
Senior Petitions Attorney
Office of Petitions

UNITED STATES PATENT AND TRADEMARK OFFICE

Commissioner for Patents
United States Patent and Trademark Office
P.O. Box 1450
Alexandria, VA 22313-1450
www.uspto.gov

MAILED

FEB 15 2011

OFFICE OF PETITIONS

CHARLES M. LEEDOM, JR.
6524 TRUMAN LANE
FALLS CHURCH VA 22043

In re Patent No. RE38,787 :
Issued: August 30, 2005 :
Reissue of Patent No. 5,761,621 : ON PETITION
Issued: June 2, 1998 :
Application No. 09/392,676 :
Filed: September 8, 1999
Attorney Docket No. 740301-411

This is a decision on the request for reconsideration of the decision dismissing the petition under 1.377 petition, filed December 10, 2010, to accept and record the 11 ½ year maintenance fee for the above-identified patent.

The petition is **dismissed**.

Any request for reconsideration of this decision must be submitted within TWO (2) MONTHS from the mail date of this decision. Extensions of time under 37 CFR 1.136(a) are permitted.

The patent upon which the above-identified reissue patent was based, Patent No. 5,761,621, issued on June 2, 1998. The first maintenance fee (3 ½ year) on Patent No. 5,761,621 was paid timely on November 6, 2001. On August 30, 2005, Reissue Patent No. RE38,787 was issued. The time table for payment of maintenance fees for a reissue patent is the same as the time table for payment of the original patent upon which the reissue patent was based. The second maintenance fee (7 ½ year) on Reissue Patent No. RE38,787 was paid timely on November 11, 2005.

Petitioner has explained that on June 1, 2010, the 11 ½ year maintenance fee was paid in RE40,540, which is a divisional of RE38,787. As stated in MPEP 1415.01 (in pertinent part):

> In some instances, more than one reissue patentwill be granted to replace a single original patent. The issuance of more than one reissue patent does not alter the schedule of payments of maintenance fees on the original patent. The existence of multiple reissue patents for one original patent can arise where multiple divisional reissue applications are filed for the same patent, and the multiple applications issue as reissue patents (all to replace the same original patent). In addition, a divisional application or continuation application of an existing reissue

> application may be filed, and both may then issue as reissue patents. In such instances, 35 U.S.C. 41 does not provide for the charging of more than one maintenance fee for the multiple reissues. Thus, only one maintenance fee is required for all the multiple reissue patents that replaced the single original patent. The maintenance fee must be directed to the latest reissue patent that has issued.

Accordingly, no 11 ½ year maintenance fee is due for RE38,787 because the 11 ½ year maintenance fee was paid in the latest reissue patent that has issued, RE40,540.

Pursuant to petitioners' authorization, deposit account no. 02-2135 will be refunded the $4,240.00 submitted with the present reconsideration petition.

A courtesy copy of this decision will be mailed to the address listed on the petition. Until appropriate instructions are submitted, all future correspondence regarding this patent will be directed solely to the correspondence address of record.

Further correspondence with respect to this matter should be delivered through one of the following mediums:

By mail:	Mail Stop PETITIONS Commissioner for Patents Post Office Box 1450 Alexandria, VA 22313-1450
By hand:	Customer Service Window Mail Stop Petitions Randolph Building 401 Dulany Street Alexandria, VA 22314
By fax:	(571) 273-8300 ATTN: Office of Petitions
By internet:	EFS-Web www.uspto.gov/ebc/efs_help.html (for help using EFS-Web call the Patent Electronic Business Center at (866) 217-9197)

Telephone inquiries concerning this decision should be directed to the undersigned at (571) 272-3230.

Shirene Willis Brantley
Senior Petitions Attorney
Office of Petitions

CC: BRIAN ROSENBLOOM
ROTHWELL, FIGG, ERNST & MANBECK, P.C.
SUITE 800, 1425 K STREET, N.W.
WASHINGTON, D.C. 20005

UNITED STATES PATENT AND TRADEMARK OFFICE

Commissioner for Patents
United States Patent and Trademark Office
P.O. Box 1450
Alexandria, VA 22313-1450
www.uspto.gov

Paper No. 7

HOGAN LOVELLS US LLP
1999 AVENUE OF THE STARS
SUITE 1400
LOS ANGELES, CA 90067

MAILED

FEB 18 2011

OFFICE OF PETITIONS

In re Patent No. 6,181,853 :
Issue Date: May 12, 1998 :
Application No. 09/392,831 : ON PETITION
Filed: September 8, 1999 :
Patentee: Robert K. Wade :

This is a decision in response to a petition under 37 CFR 1.378(c), filed January 28, 2011, to accept an unintentionally delayed payment of a maintenance fee for the above-identified patent.

The petition is DISMISSED.

A petition to accept the unintentionally delayed payment of a maintenance fee under 35 U.S.C. 41(c) and 37 CFR 1.378(c) must be accompanied by: (1) a statement that the delay was unintentional; (2) payment of the appropriate maintenance fee, unless previously submitted; (3) payment of the surcharge set forth in 37 CFR 1.20(i)(2).

The petition lacks item (1) above. In this regard, the petition is not signed, as required by 37 CFR 1.378(d), by an attorney or agent registered to practice before the Patent and Trademark Office, the patentee, or the assignee or other party in interest as established by 37 CFR 3.73(b).[1] Consequently, the petition is considered not to contain a proper statement of unintentional delay and, therefore, cannot be accepted.

If reconsideration of this decision is desired, a properly signed petition for reconsideration under 37 CFR 1.378(e) must be filed within TWO (2) MONTHS from the mail date of this decision. No extension of this 2-month time limit can be granted under 37 CFR 1.136(a) or (b). Any such petition for reconsideration must be accompanied by the petition fee of $400 as set forth in 37 CFR 1.17(f). The petition for reconsideration must also include any lacking item(s) noted above, since, after a decision on the petition for reconsideration, no further reconsideration or review of the matter will be undertaken by the Director. For applicant's convenience a Statement under 37 CFR 3.73(b) is attached.

[1] 37 CFR 3.73(b) provides that: (1) when an assignee seeks to take action in a matter before the Office, the assignee must establish its ownership of the property to the satisfaction of the Commissioner; (2) ownership is established by submitting to the Office, in the Office file related to the matter in which action is sought to be taken, documentary evidence of a chain of title from the original owner to the assignee (e.g., copy of an executed assignment submitted for recording) or by specifying (e.g., reel and frame number) where such evidence is recorded in the Office; (3) the submission establishing ownership must be signed by a party authorized to act on behalf of the assignee; and (4) documents submitted to establish ownership may be required to be recorded as a condition to permitting the assignee to take action in a matter pending before the Office.

The file does not indicate a change of address has been submitted, although the address given on the petition differs from the address of record. If appropriate, a change of address should be filed in accordance with MPEP 601.03. A courtesy copy of this decision is being mailed to the address given on the petition; however, the Office will mail all future correspondence solely to the address of record.

Further correspondence with respect to this matter should be delivered through one of the following mediums:

By mail:	Mail Stop PETITIONS Commissioner for Patents Post Office Box 1450 Alexandria, VA 22313-1450
By hand:	Customer Service Window Mail Stop Petitions Randolph Building 401 Dulany Street Alexandria, VA 22314
By fax:	(571) 273-8300 ATTN: Office of Petitions
By Internet:	EFS-Web[2]

If petitioner does not wish to pursue reinstatement of this expired patent, petitioner may request a refund of the $1,240 maintenance fee and the $1,640 surcharge fee submitted with the petition. The request should be made in writing and addressed to: Mail Stop 16, Director of the U.S. Patent and Trademark Office, P. O. Box 1450, Alexandria, VA 22313-1450. A copy of this decision should accompany petitioner's request.

Any questions concerning this matter may be directed to the undersigned at (571) 272-3204.

/SDB/

Sherry D. Brinkley
Petitions Examiner
Office of Petitions

cc: SUSAN CHEN
1812 FLOWR AVE
DUARTE, CA 91010

[2] www.uspto.gov/ebc/efs_help.html (for help using EFS-Web call the Patent Electronic Business Center at (866) 217-9197)

UNITED STATES PATENT AND TRADEMARK OFFICE

Commissioner for Patents
United States Patent and Trademark Office
P.O. Box 1450
Alexandria, VA 22313-1450
www.uspto.gov

MAILED

MAY 19 2011

OFFICE OF PETITIONS

HOGAN LOVELLS US LLP
1999 AVENUE OF THE STARS
SUITE 1400
LOS ANGELES, CA 90067

In re Patent No. 6,181,853 :
Issue Date: January 30, 2001 :
Application No. 09/392,831 : ON PETITION
Filed: September 8, 1999 :
Attorney Docket No. 34013-00026 :

This is a decision on the renewed petition under 37 CFR 1.378(e), filed April 7, 2011, requesting reconsideration of a prior decision which refused to accept the delayed payment of a maintenance fee under 37 CFR 1.378(c) for the above identified patent.

The renewed petition is found to comply with the requirements of 35 U.S.C. 41(c) and 37 CFR 1.378(c) (d) and (e). Accordingly, the petition is **GRANTED**.

The 7 ½ year maintenance fee in this case is hereby accepted and the above-identified patent is reinstated as of the mail date of this decision.

It is noted that the address given on the petition differs from the address of record. If appropriate, a change of address should be filed in accordance with MPEP 601.03. Petitioner is reminded, however, that the mere filing of a change of correspondence address does not affect fee address. Therefore, if petitioner desires to receive future correspondence regarding any Maintenance Fee Reminder which may be mailed regarding maintenance fees for the above-identified patent, an appropriate "fee address" and/or "customer number" form should be submitted to the Maintenance Fee Division. A courtesy copy of this decision is being mailed to the address given on the petition.

Telephone inquiries concerning this matter may be directed to the undersigned at (571) 272-3204.

/SDB/

Sherry D. Brinkley
Petitions Examiner
Office of Petitions

cc: KEVIN G. SHAW
555 THIRTEENTH STREET, N.W.
WASHINGTON, DC 20004

UNITED STATES PATENT AND TRADEMARK OFFICE

Commissioner for Patents
United States Patent and Trademark Office
P.O. Box 1450
Alexandria, VA 22313-1450
www.uspto.gov

HAYNES AND BOONE, LLP
IP SECTION
2323 VICTORY AVENUE
SUITE 700
DALLAS TX 75219

MAILED
DEC 19 2011
OFFICE OF PETITIONS

In re Patent No. 6,631,359 :
Issued: October 7, 2003 :
Application No. 09/393,150 : ON PETITION
Filed: September 10, 1999 :
Attorney Docket No. 4154-4 (M-8536 US) :

This is a decision on the petition under 37 CFR 1.137(b), filed November 15, 2011, which will be treated as a petition under 37 CFR 1.378(c) to accept the delayed payment of a maintenance fee for the above-identified patent.

The petition is **DISMISSED**.

If reconsideration of this decision is desired, a petition for reconsideration under 37 CFR 1.378(e) must be filed within TWO (2) MONTHS from the mail date of this decision. No extension of this two-month time limit can be granted under 37 CFR 1.136(a) or (b). This is **not** a final agency action within the meaning of 5 U.S.C. § 704.

Any petition for reconsideration of this decision must be accompanied by the petition fee of $400 as set forth in 37 CFR 1.17(f). The petition for reconsideration must include the lacking item(s) noted below, since, after a decision on the petition for reconsideration, no further reconsideration or review of the matter will be undertaken by the Commissioner.

A petition to accept the unintentionally delayed payment of a maintenance fee under 35 U.S.C. § 41(c) and 37 CFR 1.378(c) must be accompanied by: (1) a statement that the delay was unintentional; (2) payment of the appropriate maintenance fee, unless previously submitted; (3) payment of the surcharge set forth in 37 CFR 1.20(i)(2). This petition lacks items (1) and (3) listed above.

With regards to item (1) the instant petition (form PTO/SB/66) is not signed. The statement required in item (1) has not been signed by petitioner. A grantable petition pursuant to 37 CFR 1.378(c) must include the required statement signed by:

1) An attorney or agent of record appointed in compliance with § 1.34(b);
2) A registered attorney or agent not of record who acts in a representative capacity under

the provisions of§ 1.34(a);
(3) The assignee of record of the entire interest, if there is an assignee of record of the entire interest;
(4) An assignee of record of an undivided part interest, and any assignee(s) of the remaining interest and any applicant retaining an interest, if there is an assignee of record of an undividing part interest; or
(5) All of the applicants (§§ 1.42.1.43 and 1.47) for patent, unless there is an assignee of record of the entire interest and such assignee has taken action in the application in accordance with §§ 3.71 and 3.73.

Petitioner has failed to sign the petition and therefore the petition submitted is considered improper.

Additionally, it is noted that Kathleen Bowers is currently not authorized to sign a petition in the above-identified patent. Ms. Bowers has not established that she is authorized to sign on behalf of the patentee(s), assignee, or other party of interest.

Further, if the instant petition is on the behalf of the assignee, the petition does not comply with 37 CFR 3.73(b). 37 CFR 3.73(b) provides that: (1) when an assignee seeks to take action in a matter before the Office, the assignee must establish its ownership of the property to the satisfaction of the Commissioner; (2) ownership is established by submitting to the Office, in the Office file related to the matter in which action is sought to be taken, documentary evidence of a chain of title from the original owner to the assignee (e.g., copy of an executed assignment submitted for recording) or by specifying (e.g., reel and frame number) where such evidence is recorded in the Office; (3) the submission establishing ownership must be signed by a party authorized to act on behalf of the assignee; and (4) documents submitted to establish ownership may be required to be recorded as a condition to permitting the assignee to take action in a matter pending before the Office. A 37 CFR 3.73(b) statement is enclosed.

Currently, there is no Statement under 37 CFR 3.73(b) of record in the above-identified patent.

Consequently, the petition under 37 CFR 1.378(c), cannot be accepted at this time. A renewed petition with the proper signature as listed above is required.

With regards to item (3), petitioner has submitted $75.00 towards the required $1,640.00 surcharge fee, thus creating a $1,565.00 shortage. Therefore, as stated above a $400.00 petition fee is also required for any petition for reconsideration, bring the total to $1,965.00.

A courtesy copy of this decision is being mailed to an alternate address; however, all future correspondence will be mailed solely to the address of record.

If this petition is not renewed or if renewed and not granted, then petitioner may request a refund of the maintenance and surcharge fees paid. The fee for requesting reconsideration is not refundable.

Further correspondence with respect to this matter should be addressed as follows:

By Mail: Mail Stop PETITIONS
Commissioner for Patents
Post Office Box 1450
Alexandria, VA 22313-1450

By hand: U.S. Patent and Trademark Office
Customer Service Window, Mail Stop Petitions
Randolph Building
401 Dulany Street
Alexandria, VA 22314

The centralized facsimile number is (571) 273-8300.

Telephone inquiries should be directed to the undersigned at (571)-272-7751.

/Joan Olszewski/
Joan Olszewski
Petitions Examiner
Office of Petitions

cc: Kathleen Bowers
DPHI, Inc.
2101 Ken Pratt Blvd. #200
Longmont, Colorado 80501

Attachment: PTO/SB/96

UNITED STATES PATENT AND TRADEMARK OFFICE

Commissioner for Patents
United States Patent and Trademark Office
P.O. Box 1450
Alexandria, VA 22313-1450
www.uspto.gov

HAYNES AND BOONE, LLP
IP SECTION
2323 VICTORY AVENUE
SUITE 700
DALLAS TX 75219

MAILED
JAN 23 2012
OFFICE OF PETITIONS

In re Patent No. 6,631,359 :
Issued: October 7, 2003 :
Application No. 09/393,150 : ON PETITION
Filed: September 10, 1999 :
Attorney Docket No. 4154-4 (M-8536 US) :

This is a decision on the renewed petition under 37 CFR 1.378(c), filed January 4, 2012, to accept the delayed payment of a maintenance fee for the above-identified patent.

The petition is **GRANTED**.

This patent expired on October 8, 2011 for failure to pay the seven and one-half year maintenance fee. Since this petition was submitted within twenty-four months after the six-month grace period provided in 37 CFR 1.362(e), the petition was timely filed under the provisions of 37 CFR 1.378(c).

The maintenance fee is hereby accepted and the above-identified patent is reinstated as of the mail date of this decision.

Telephone inquiries concerning this decision should be directed to the undersigned at (571) 272-7751.

/Joan Olszewski/
Joan Olszewski
Petitions Examiner
Office of Petitions

UNITED STATES PATENT AND TRADEMARK OFFICE

Commissioner for Patents
United States Patent and Trademark Office
P.O. Box 1450
Alexandria, VA 22313-1450
www.uspto.gov

In re Patent No. 6297801
Issue Date: October 2,2001
Application No. 09393479
Filed: September 10,1999
Attorney Docket No. CT-315

:
:DECISION GRANTING PETITION
:UNDER 37 CFR 1.378(c)
:

This is a decision on the electronic petition, filed October 18,2010 ,under 37 CFR 1.378(c) to accept the unintentionally delayed payment of the 7.5 year maintenance fee for the above-identified patent.

The petition is **GRANTED**.

The maintenance fee is accepted, and the above-identified patent reinstated as of October 18,2010 . This decision also constitutes notice that the fee has been accepted. An electronic copy of the petition and this decision has been created as an entry in the Image File Wrapper. Nevertheless, petitioner should print and retain an independent copy.

Telephone inquiries related to this electronic decision should be directed to the Electronic Business Center at 1-866-217-9197.

PTO/SB/66 (03-09)
Approved for use through 03/31/2012. OMB 0651-0016
U.S. Patent and Trademark Office: U.S. DEPARTMENT OF COMMERCE
Under the Paperwork Reduction Act of 1995, no persons are required to respond to a collection of information unless it displays valid OMB control number.

PETITION TO ACCEPT UNINTENTIONALLY DELAYED PAYMENT OF MAINTENANCE FEE IN AN EXPIRED PATENT (37 CFR 1.378(c))

Patent Number	Issue Date (YYYY-MM-DD)	Application Number	Filing Date (YYYY-MM-DD)	Docket Number (if applicable)
6297801	2001-10-02	09393479	1999-09-10	CT-315

CAUTION: Maintenance fee (and surcharge, if any) payment must correctly identify: (1) the patent number and (2) the application number of the actual U.S. application leading to issuance of that patent to ensure the fee(s) is/are associated with the correct patent. 37 CFR 1.366(c) and (d).

SMALL ENTITY

☐ Patentee claims, or has previously claimed, small entity status. See 37 CFR 1.27.

LOSS OF ENTITLEMENT TO SMALL ENTITY STATUS

☐ Patentee is no longer entitled to small entity status. See 37 CFR 1.27(g)

NOT Small Entity			Small Entity		
	Fee	Code		Fee	Code
○	3 ½ year	(1551)	○	3 ½ year	(2551)
◉	7 ½ year	(1552)	○	7 ½ year	(2552)
○	11 ½ year	(1553)	○	11 ½ year	(2553)

SURCHARGE

The surcharge required by 37 CFR 1.20(i)(2) (Fee Code 1558) must be paid as a condition of accepting unintentionally delayed payment of the maintenance fee.

MAINTENANCE FEE (37 CFR 1.20(e)-(g))

The appropriate maintenance fee must be submitted with this petition.

STATEMENT

THE UNDERSIGNED CERTIFIES THAT THE DELAY IN PAYMENT OF THE MAINTENANCE FEE TO THIS PATENT WAS UNINTENTIONAL

PETITIONER(S) REQUEST THAT THE DELAYED PAYMENT OF THE MAINTENANCE FEE BE ACCEPTED AND THE PATENT REINSTATED

THIS PORTION MUST BE COMPLETED BY THE SIGNATORY OR SIGNATORIES

37 CFR 1.378(d) states: "Any petition under this section must be signed by an attorney or agent registered to practice before the Patent and Trademark Office, or by the patentee, the assignee, or other party in interest."

I certify, in accordance with 37 CFR 1.4(d)(4) that I am

◉ An attorney or agent registered to practice before the Patent and Trademark Office

○ A sole patentee

○ A joint patentee; I certify that I am authorized to sign this submission on behalf of all the other patentees.

○ A joint patentee; all of whom are signing this e-petition

○ The assignee of record of the entire interest

PTO/SB/66 (03-09)
Approved for use through 03/31/2012. OMB 0651-0016
U.S. Patent and Trademark Office: U.S. DEPARTMENT OF COMMERCE
Under the Paperwork Reduction Act of 1995, no persons are required to respond to a collection of information unless it displays valid OMB control number.

Patent Practitioner			
A signature of the applicant or representative is required in accordance with 37 CFR 1.33 and 10.18. Please see 37 CFR 1.4(d) for the form of the signature			
Signature	/Kendal M. Sheets/	Date (YYYY-MM-DD)	2010-10-15
Name	Kendal M. Sheets	Registration Number	47077

This collection of information is required by 37 CFR 1.378(c). The information is required to obtain or retain a benefit by the public which is to file (and by the USPTO to process) an application. Confidentiality is governed by 35 U.S.C. 122 and 37 CFR 1.11 and 1.14. This collection is estimated to take 1 hour to complete, including gathering, preparing, and submitting the completed application form to the USPTO. Time will vary depending upon the individual case. Any comments on the amount of time you require to complete this form and/ or suggestions for reducing this burden, should be sent to the Chief Information Officer, U.S. Patent and Trademark Office, U.S. Department of Commerce, P.O. Box 1450, Alexandria, VA 22313-1450. DO NOT SEND FEES OR COMPLETED FORMS TO THIS ADDRESS. **This form can only be used when in conjunction with EFS-Web. If this form is mailed to the USPTO, it may cause delays in reinstating the patent.**

Privacy Act Statement

The Privacy Act of 1974 (P.L. 93-579) requires that you be given certain information in connection with your submission of the attached form related to a patent application or patent. Accordingly, pursuant to the requirements of the Act, please be advised that: (1) the general authority for the collection of this information is 35 U.S.C. 2(b)(2); (2) furnishing of the information solicited is voluntary; and (3) the principal purpose for which the information is used by the U.S. Patent and Trademark Office is to process and/or examine your submission related to a patent application or patent. If you do not furnish the requested information, the U.S. Patent and Trademark Office may not be able to process and/or examine your submission, which may result in termination of proceedings or abandonment of the application or expiration of the patent.

The information provided by you in this form will be subject to the following routine uses:

1. The information on this form will be treated confidentially to the extent allowed under the Freedom of Information Act (5 U.S.C. 552) and the Privacy Act (5 U.S.C. 552a). Records from this system of records may be disclosed to the Department of Justice to determine whether the Freedom of Information Act requires disclosure of these records.

2. A record from this system of records may be disclosed, as a routine use, in the course of presenting evidence to a court, magistrate, or administrative tribunal, including disclosures to opposing counsel in the course of settlement negotiations.

3. A record in this system of records may be disclosed, as a routine use, to a Member of Congress submitting a request involving an individual, to whom the record pertains, when the individual has requested assistance from the Member with respect to the subject matter of the record.

4. A record in this system of records may be disclosed, as a routine use, to a contractor of the Agency having need for the information in order to perform a contract. Recipients of information shall be required to comply with the requirements of the Privacy Act of 1974, as amended, pursuant to 5 U.S.C. 552a(m).

5. A record related to an International Application filed under the Patent Cooperation Treaty in this system of records may be disclosed, as a routine use, to the International Bureau of the World Intellectual Property Organization, pursuant to the Patent Cooperation Treaty.

6. A record in this system of records may be disclosed, as a routine use, to another federal agency for purposes of National Security review (35 U.S.C. 181) and for review pursuant to the Atomic Energy Act (42 U.S.C. 218(c)).

7. A record from this system of records may be disclosed, as a routine use, to the Administrator, General Services, or his/her designee, during an inspection of records conducted by GSA as part of that agency's responsibility to recommend improvements in records management practices and programs, under authority of 44 U.S.C. 2904 and 2906. Such disclosure shall be made in accordance with the GSA regulations governing inspection of records for this purpose, and any other relevant (i.e., GSA or Commerce) directive. Such disclosure shall not be used to make determinations about individuals.

8. A record from this system of records may be disclosed, as a routine use, to the public after either publication of the application pursuant to 35 U.S.C. 122(b) or issuance of a patent pursuant to 35 U.S.C. 151. Further, a record may be disclosed, subject to the limitations of 37 CFR 1.14, as a routine use, to the public if the record was filed in an application which became abandoned or in which the proceedings were terminated and which application is referenced by either a published application, an application open to public inspections or an issued patent.

9. A record from this system of records may be disclosed, as a routine use, to a Federal, State, or local law enforcement agency, if the USPTO becomes aware of a violation or potential violation of law or regulation.

UNITED STATES PATENT AND TRADEMARK OFFICE

Commissioner for Patents
United States Patent and Trademark Office
P.O. Box 1450
Alexandria, VA 22313-1450
www.uspto.gov

In re Patent No. 6199718
Issue Date: March 13,2001
Application No. 09394176
Filed: September 13,1999
Attorney Docket No. 7822-PA01

:
:DECISION GRANTING PETITION
:UNDER 37 CFR 1.378(c)
:

This is a decision on the electronic petition, filed November 19,2010 ,under 37 CFR 1.378(c) to accept the unintentionally delayed payment of the 7.5 year maintenance fee for the above-identified patent.

The petition is **GRANTED**.

The maintenance fee is accepted, and the above-identified patent reinstated as of November 19,2010 . This decision also constitutes notice that the fee has been accepted. An electronic copy of the petition and this decision has been created as an entry in the Image File Wrapper. Nevertheless, petitioner should print and retain an independent copy.

Telephone inquiries related to this electronic decision should be directed to the Electronic Business Center at 1-866-217-9197.

PTO/SB/66 (03-09)
Approved for use through 03/31/2012. OMB 0651-0016
U.S. Patent and Trademark Office: U.S. DEPARTMENT OF COMMERCE
Under the Paperwork Reduction Act of 1995, no persons are required to respond to a collection of information unless it displays valid OMB control number.

PETITION TO ACCEPT UNINTENTIONALLY DELAYED PAYMENT OF MAINTENANCE FEE IN AN EXPIRED PATENT (37 CFR 1.378(c))

Patent Number	Issue Date (YYYY-MM-DD)	Application Number	Filing Date (YYYY-MM-DD)	Docket Number (if applicable)
6,199,718	2001-03-13	09/394,176	1999-09-13	

CAUTION: Maintenance fee (and surcharge, if any) payment must correctly identify: (1) the patent number and (2) the application number of the actual U.S. application leading to issuance of that patent to ensure the fee(s) is/are associated with the correct patent. 37 CFR 1.366(c) and (d).

SMALL ENTITY

☒ Patentee claims, or has previously claimed, small entity status. See 37 CFR 1.27.

LOSS OF ENTITLEMENT TO SMALL ENTITY STATUS

☐ Patentee is no longer entitled to small entity status. See 37 CFR 1.27(g)

NOT Small Entity	Fee	Code	Small Entity	Fee	Code
○	3 ½ year	(1551)	○	3 ½ year	(2551)
○	7 ½ year	(1552)	◉	7 ½ year	(2552)
○	11 ½ year	(1553)	○	11 ½ year	(2553)

SURCHARGE

The surcharge required by 37 CFR 1.20(i)(2) (Fee Code 1558) must be paid as a condition of accepting unintentionally delayed payment of the maintenance fee.

MAINTENANCE FEE (37 CFR 1.20(e)-(g))

The appropriate maintenance fee must be submitted with this petition.

STATEMENT

THE UNDERSIGNED CERTIFIES THAT THE DELAY IN PAYMENT OF THE MAINTENANCE FEE TO THIS PATENT WAS UNINTENTIONAL

PETITIONER(S) REQUEST THAT THE DELAYED PAYMENT OF THE MAINTENANCE FEE BE ACCEPTED AND THE PATENT REINSTATED

THIS PORTION MUST BE COMPLETED BY THE SIGNATORY OR SIGNATORIES

37 CFR 1.378(d) states: "Any petition under this section must be signed by an attorney or agent registered to practice before the Patent and Trademark Office, or by the patentee, the assignee, or other party in interest."

I certify, in accordance with 37 CFR 1.4(d)(4) that I am

◉ An attorney or agent registered to practice before the Patent and Trademark Office

○ A sole patentee

○ A joint patentee; I certify that I am authorized to sign this submission on behalf of all the other patentees.

○ A joint patentee; all of whom are signing this e-petition

○ The assignee of record of the entire interest

PTO/SB/66 (03-09)
Approved for use through 03/31/2012. OMB 0651-0016
U.S. Patent and Trademark Office: U.S. DEPARTMENT OF COMMERCE
Under the Paperwork Reduction Act of 1995, no persons are required to respond to a collection of information unless it displays valid OMB control number.

Patent Practitioner			
A signature of the applicant or representative is required in accordance with 37 CFR 1.33 and 10.18. Please see 37 CFR 1.4(d) for the form of the signature			
Signature	/K. Brian Matlock/	Date (YYYY-MM-DD)	2010-11-19
Name	K. Brian Matlock	Registration Number	52005

This collection of information is required by 37 CFR 1.378(c). The information is required to obtain or retain a benefit by the public which is to file (and by the USPTO to process) an application. Confidentiality is governed by 35 U.S.C. 122 and 37 CFR 1.11 and 1.14. This collection is estimated to take 1 hour to complete, including gathering, preparing, and submitting the completed application form to the USPTO. Time will vary depending upon the individual case. Any comments on the amount of time you require to complete this form and/ or suggestions for reducing this burden, should be sent to the Chief Information Officer, U.S. Patent and Trademark Office, U.S. Department of Commerce, P.O. Box 1450, Alexandria, VA 22313-1450. DO NOT SEND FEES OR COMPLETED FORMS TO THIS ADDRESS. **This form can only be used when in conjunction with EFS-Web. If this form is mailed to the USPTO, it may cause delays in reinstating the patent.**

Privacy Act Statement

The Privacy Act of 1974 (P.L. 93-579) requires that you be given certain information in connection with your submission of the attached form related to a patent application or patent. Accordingly, pursuant to the requirements of the Act, please be advised that: (1) the general authority for the collection of this information is 35 U.S.C. 2(b)(2); (2) furnishing of the information solicited is voluntary; and (3) the principal purpose for which the information is used by the U.S. Patent and Trademark Office is to process and/or examine your submission related to a patent application or patent. If you do not furnish the requested information, the U.S. Patent and Trademark Office may not be able to process and/or examine your submission, which may result in termination of proceedings or abandonment of the application or expiration of the patent.

The information provided by you in this form will be subject to the following routine uses:

1. The information on this form will be treated confidentially to the extent allowed under the Freedom of Information Act (5 U.S.C. 552) and the Privacy Act (5 U.S.C. 552a). Records from this system of records may be disclosed to the Department of Justice to determine whether the Freedom of Information Act requires disclosure of these records.

2. A record from this system of records may be disclosed, as a routine use, in the course of presenting evidence to a court, magistrate, or administrative tribunal, including disclosures to opposing counsel in the course of settlement negotiations.

3. A record in this system of records may be disclosed, as a routine use, to a Member of Congress submitting a request involving an individual, to whom the record pertains, when the individual has requested assistance from the Member with respect to the subject matter of the record.

4. A record in this system of records may be disclosed, as a routine use, to a contractor of the Agency having need for the information in order to perform a contract. Recipients of information shall be required to comply with the requirements of the Privacy Act of 1974, as amended, pursuant to 5 U.S.C. 552a(m).

5. A record related to an International Application filed under the Patent Cooperation Treaty in this system of records may be disclosed, as a routine use, to the International Bureau of the World Intellectual Property Organization, pursuant to the Patent Cooperation Treaty.

6. A record in this system of records may be disclosed, as a routine use, to another federal agency for purposes of National Security review (35 U.S.C. 181) and for review pursuant to the Atomic Energy Act (42 U.S.C. 218(c)).

7. A record from this system of records may be disclosed, as a routine use, to the Administrator, General Services, or his/her designee, during an inspection of records conducted by GSA as part of that agency's responsibility to recommend improvements in records management practices and programs, under authority of 44 U.S.C. 2904 and 2906. Such disclosure shall be made in accordance with the GSA regulations governing inspection of records for this purpose, and any other relevant (i.e., GSA or Commerce) directive. Such disclosure shall not be used to make determinations about individuals.

8. A record from this system of records may be disclosed, as a routine use, to the public after either publication of the application pursuant to 35 U.S.C. 122(b) or issuance of a patent pursuant to 35 U.S.C. 151. Further, a record may be disclosed, subject to the limitations of 37 CFR 1.14, as a routine use, to the public if the record was filed in an application which became abandoned or in which the proceedings were terminated and which application is referenced by either a published application, an application open to public inspections or an issued patent.

9. A record from this system of records may be disclosed, as a routine use, to a Federal, State, or local law enforcement agency, if the USPTO becomes aware of a violation or potential violation of law or regulation.

UNITED STATES PATENT AND TRADEMARK OFFICE

Commissioner for Patents
United States Patent and Trademark Office
P.O. Box 1450

MAILED

JAN 17 2012

OFFICE OF PETITIONS

MILLS LAW FIRM PLLC
P O BOX 587
WAKE FOREST NC 27588

In re Patent No. 6,172,144 :
Issue Date: January 9, 2001 : ON PETITION
Application No.: 09/394,251 :
Filed: September 13, 1999 :

This is a decision on the petition under 37 CFR 1.378(c), filed November 15, 2011, to accept the delayed payment of a maintenance fee for the above-identified patent.

The petition is **DISMISSED**.

The above-identified patent issued on January 9, 2001. Therefore, the set forth period in 35 U.S.C. § 41(b) for paying the seven and one-half year maintenance fee expired on January 9, 2009.

A petition under 37 CFR 1.378(c) must be filed within twenty-four months after the six month grace period specified in 35 USC 41(b). The six month grace period for the instant patent expired midnight on January 9, 2009. Therefore, an unintentional petition to reinstate the instant patent must have been submitted no later than January 9, 2011. Since the petition was not timely filed, the instant patent will not be considered for reinstatement under the unintentional provisions of 37 CFR 1.378(c).

35 USC § 41(c)(1) authorizes the Commissioner to accept a delayed maintenance fee payment within twenty-four (24) months after the expiration of the six-month grace period specified in 35 USC §41(b) if the delay is shown to have been unintentional, and authorizes the Commissioner to accept a delayed maintenance fee payment at any time if the delay is shown to have been unavoidable. Thus, 35 USC § 41(c)(1) does not authorize the Commissioner to accept a delayed maintenance fee payment later than twenty-four (24) months after the expiration of the six-month grace period specified in 35 USC §41(b) unless the delay is shown to have been unavoidable. Since the instant petition was not filed within twenty-four (24) months after the expiration of the six-month grace period specified in 35 USC § 41(b), the Commissioner cannot accept a delayed maintenance fee payment for the above-identified patent under 37 CFR 1.378(c).

Should petitioner wish to pursue reinstatement of the above-identified patent on the basis of unavoidable delay, petitioner should file a petition under 35 USC § 41(c) and 37 CFR

1.378(b), which must be accompanied by (1) an adequate, verified showing that the delay was unavoidable, since reasonable care was taken to insure that the maintenance fee would be paid timely and that the petition was filed promptly after the patentee was notified of, or otherwise became aware of, the expiration of the patent, (2) payment of the appropriate maintenance fee, unless previously submitted, and (3) payment of the surcharge set forth in 37 CFR 1.20(i)(1).

If petitioner does not wish to pursue reinstatement of this expired patent, petitioner may request a refund of the $3065submitted with the instant petition. The request should be made in writing and addressed to: Mail Stop 16 Director of the U.S. Patent and Trademark Office, P.O. Box 1450, Alexandria, VA 22313-1450. A copy of this decision should accompany petitioner's request.

The file does not indicate a change of address has been submitted, although the address given on the petition differs from the address of record. If appropriate, a change of fee address (form PTO/SB/47) and a request for customer number (form PTO/SB/125) should be filed in accordance with Manual of Patent Examining Procedure, section 2540. A courtesy copy of this decision is being mailed to the address on the petition. However, the Office will mail all future correspondence solely to the address of record.

Further correspondence with respect to this matter should be addressed as follows:

By Mail:
Mail Stop PETITION
Commissioner for Patents
P. O. Box 1450
Alexandria, VA 22313-1450

By hand:
U. S. Patent and Trademark Office
Customer Service Window, Mail Stop Petitions
Randolph Building
401 Dulany Street
Alexandria, VA 22314

The centralized facsimile number is **(571) 273-8300.**

Telephone inquiries relating to this decision should be directed to Robert DeWitty (571-272-8427).

Ramesh Krishnamurthy
Petitions Examiner
Office of Petitions

cc: Peter D. Sachtjen
Ishman Law Firm PC
9660 Falls of Neuse Road
Suite 138-350
Raleigh, NC 27615

UNITED STATES PATENT AND TRADEMARK OFFICE

Commissioner for Patents
United States Patent and Trademark Office
P.O. Box 1450
Alexandria, VA 22313-1450
www.uspto.gov

MAILED
MAR 16 2012
OFFICE OF PETITIONS

DRINKER BIDDLE & REATH
ATTN: INTELLECTUAL PROPERTY GROUP
ONE LOGAN SQUARE, SUITE 2000
PHILADELPHIA PA 19103-6996

In re Patent No. 6,335,217 :
Issue Date: March 12, 2002 :
Application No. 09/395,865 : NOTICE
Filed: September 17, 1999 :
Attorney Docket No. 047264-0011-00-US :
(414588)

This is a notice regarding your request for acceptance of a fee deficiency submission under 37 CFR 1.28 filed February 17, 2012. On September 1, 1998, the Court of Appeals for the Federal Circuit held that 37 CFR 1.28(c) is the sole provision governing the time for correction of the erroneous payment of the issue fee as a small entity. **See DH Technology v. Synergystex International, Inc. 154 F.3d 1333, 47 USPQ2d 1865 (Fed. Cir. Sept. 1, 1998).**

The Office no longer investigates or rejects original or reissue applications under 37 CFR 1.56. **1098 Off. Gaz. Pat. Office 502 (January 3, 1989)**. Therefore, nothing in this Notice is intended to imply that an investigation was done.

Your fee deficiency submission under 37 CFR 1.28 is hereby accepted. The petition is **GRANTED**.

This application is no longer entitled to small entity status. Accordingly, all future fees paid in this application must be paid at the large entity rate.

Applicant is encouraged to fax a copy of Fee Address Form to 571-273-6500 to ensure proper handling of this request.

This file is being forwarded to Files Repository.

Telephone inquiries related to this decision should be directed to the Kimberly Inabinet at (571) 272-4618.

/Kimberly Inabinet/
Kimberly Inabinet
Petitions Examiner
Office of Petitions

UNITED STATES PATENT AND TRADEMARK OFFICE

Commissioner for Patents
United States Patent and Trademark Office
P.O. Box 1450
Alexandria, VA 22313-1450
www.uspto.gov

DRINKER BIDDLE & REATH
ATTN: INTELLECTUAL PROPERTY GROUP
ONE LOGAN SQUARE, SUITE 2000
PHILADELPHIA PA 19103-6996

MAILED
MAR 26 2012
OFFICE OF PETITIONS

In re Patent No. 6,355,217 :
Issue Date: March 12, 2002 :
Application No. 09/395,865 : NOTICE
Filed: September 17, 1999 :
Attorney Docket No. 047264-0011-00-US :
(414588)

This is a corrected notice regarding your request for acceptance of a fee deficiency submission under 37 CFR 1.28 filed February 17, 2012. On September 1, 1998, the Court of Appeals for the Federal Circuit held that 37 CFR 1.28(c) is the sole provision governing the time for correction of the erroneous payment of the issue fee as a small entity. **See DH Technology v. Synergystex International, Inc. 154 F.3d 1333, 47 USPQ2d 1865 (Fed. Cir. Sept. 1, 1998).**

The Office no longer investigates or rejects original or reissue applications under 37 CFR 1.56. **1098 Off. Gaz. Pat. Office 502 (January 3, 1989).** Therefore, nothing in this Notice is intended to imply that an investigation was done.

Your fee deficiency submission under 37 CFR 1.28 is hereby accepted. The petition is **GRANTED**.

This application is no longer entitled to small entity status. Accordingly, all future fees paid in this application must be paid at the large entity rate.

Applicant is encouraged to fax a copy of Fee Address Form to 571-273-6500 to ensure proper handling of this request.

This file is being forwarded to Files Repository.

Telephone inquiries related to this decision should be directed to the Kimberly Inabinet at (571) 272-4618.

/Kimberly Inabinet/
Kimberly Inabinet
Petitions Examiner
Office of Petitions

UNITED STATES PATENT AND TRADEMARK OFFICE

Commissioner for Patents
United States Patent and Trademark Office
P.O. Box 1450
Alexandria, VA 22313-1450
www.uspto.gov

In re Patent No. 6272640
Issue Date: August 7,2001
Application No. 09396233
Filed: September 15,1999
Attorney Docket No. 30019.50USC1

:
:DECISION GRANTING PETITION
:UNDER 37 CFR 1.378(c)
:

This is a decision on the electronic petition, filed October 4,2010 ,under 37 CFR 1.378(c) to accept the unintentionally delayed payment of the 7.5 year maintenance fee for the above-identified patent.

The petition is **GRANTED**.

The maintenance fee is accepted, and the above-identified patent reinstated as of October 4,2010 . This decision also constitutes notice that the fee has been accepted. An electronic copy of the petition and this decision has been created as an entry in the Image File Wrapper. Nevertheless, petitioner should print and retain an independent copy.

Telephone inquiries related to this electronic decision should be directed to the Electronic Business Center at 1-866-217-9197.

PTO/SB/66 (03-09)
Approved for use through 03/31/2012. OMB 0651-0016
U.S. Patent and Trademark Office: U.S. DEPARTMENT OF COMMERCE
Under the Paperwork Reduction Act of 1995, no persons are required to respond to a collection of information unless it displays valid OMB control number.

PETITION TO ACCEPT UNINTENTIONALLY DELAYED PAYMENT OF MAINTENANCE FEE IN AN EXPIRED PATENT (37 CFR 1.378(c))

Patent Number	Issue Date (YYYY-MM-DD)	Application Number	Filing Date (YYYY-MM-DD)	Docket Number (if applicable)
6272640	2001-08-07	09396233	1999-09-15	30019.50USC1

CAUTION: Maintenance fee (and surcharge, if any) payment must correctly identify: (1) the patent number and (2) the application number of the actual U.S. application leading to issuance of that patent to ensure the fee(s) is/are associated with the correct patent. 37 CFR 1.366(c) and (d).

SMALL ENTITY

☐ Patentee claims, or has previously claimed, small entity status. See 37 CFR 1.27.

LOSS OF ENTITLEMENT TO SMALL ENTITY STATUS

☐ Patentee is no longer entitled to small entity status. See 37 CFR 1.27(g)

NOT Small Entity	Fee	Code	Small Entity	Fee	Code
○	3 ½ year	(1551)	○	3 ½ year	(2551)
◉	7 ½ year	(1552)	○	7 ½ year	(2552)
○	11 ½ year	(1553)	○	11 ½ year	(2553)

SURCHARGE

The surcharge required by 37 CFR 1.20(i)(2) (Fee Code 1558) must be paid as a condition of accepting unintentionally delayed payment of the maintenance fee.

MAINTENANCE FEE (37 CFR 1.20(e)-(g))

The appropriate maintenance fee must be submitted with this petition.

STATEMENT

THE UNDERSIGNED CERTIFIES THAT THE DELAY IN PAYMENT OF THE MAINTENANCE FEE TO THIS PATENT WAS UNINTENTIONAL

PETITIONER(S) REQUEST THAT THE DELAYED PAYMENT OF THE MAINTENANCE FEE BE ACCEPTED AND THE PATENT REINSTATED

THIS PORTION MUST BE COMPLETED BY THE SIGNATORY OR SIGNATORIES

37 CFR 1.378(d) states: "Any petition under this section must be signed by an attorney or agent registered to practice before the Patent and Trademark Office, or by the patentee, the assignee, or other party in interest."

I certify, in accordance with 37 CFR 1.4(d)(4) that I am

◉ An attorney or agent registered to practice before the Patent and Trademark Office

○ A sole patentee

○ A joint patentee; I certify that I am authorized to sign this submission on behalf of all the other patentees.

○ A joint patentee; all of whom are signing this e-petition

○ The assignee of record of the entire interest

PTO/SB/66 (03-09)
Approved for use through 03/31/2012. OMB 0651-0016
U.S. Patent and Trademark Office: U.S. DEPARTMENT OF COMMERCE
Under the Paperwork Reduction Act of 1995, no persons are required to respond to a collection of information unless it displays valid OMB control number.

Patent Practitioner			
A signature of the applicant or representative is required in accordance with 37 CFR 1.33 and 10.18. Please see 37 CFR 1.4(d) for the form of the signature			
Signature	/Kendal M. Sheets/	Date (YYYY-MM-DD)	2010-10-01
Name	Kendal M. Sheets	Registration Number	47077

This collection of information is required by 37 CFR 1.378(c). The information is required to obtain or retain a benefit by the public which is to file (and by the USPTO to process) an application. Confidentiality is governed by 35 U.S.C. 122 and 37 CFR 1.11 and 1.14. This collection is estimated to take 1 hour to complete, including gathering, preparing, and submitting the completed application form to the USPTO. Time will vary depending upon the individual case. Any comments on the amount of time you require to complete this form and/ or suggestions for reducing this burden, should be sent to the Chief Information Officer, U.S. Patent and Trademark Office, U.S. Department of Commerce, P.O. Box 1450, Alexandria, VA 22313-1450. DO NOT SEND FEES OR COMPLETED FORMS TO THIS ADDRESS. **This form can only be used when in conjunction with EFS-Web. If this form is mailed to the USPTO, it may cause delays in reinstating the patent.**

Privacy Act Statement

The Privacy Act of 1974 (P.L. 93-579) requires that you be given certain information in connection with your submission of the attached form related to a patent application or patent. Accordingly, pursuant to the requirements of the Act, please be advised that: (1) the general authority for the collection of this information is 35 U.S.C. 2(b)(2); (2) furnishing of the information solicited is voluntary; and (3) the principal purpose for which the information is used by the U.S. Patent and Trademark Office is to process and/or examine your submission related to a patent application or patent. If you do not furnish the requested information, the U.S. Patent and Trademark Office may not be able to process and/or examine your submission, which may result in termination of proceedings or abandonment of the application or expiration of the patent.

The information provided by you in this form will be subject to the following routine uses:

1. The information on this form will be treated confidentially to the extent allowed under the Freedom of Information Act (5 U.S.C. 552) and the Privacy Act (5 U.S.C. 552a). Records from this system of records may be disclosed to the Department of Justice to determine whether the Freedom of Information Act requires disclosure of these records.

2. A record from this system of records may be disclosed, as a routine use, in the course of presenting evidence to a court, magistrate, or administrative tribunal, including disclosures to opposing counsel in the course of settlement negotiations.

3. A record in this system of records may be disclosed, as a routine use, to a Member of Congress submitting a request involving an individual, to whom the record pertains, when the individual has requested assistance from the Member with respect to the subject matter of the record.

4. A record in this system of records may be disclosed, as a routine use, to a contractor of the Agency having need for the information in order to perform a contract. Recipients of information shall be required to comply with the requirements of the Privacy Act of 1974, as amended, pursuant to 5 U.S.C. 552a(m).

5. A record related to an International Application filed under the Patent Cooperation Treaty in this system of records may be disclosed, as a routine use, to the International Bureau of the World Intellectual Property Organization, pursuant to the Patent Cooperation Treaty.

6. A record in this system of records may be disclosed, as a routine use, to another federal agency for purposes of National Security review (35 U.S.C. 181) and for review pursuant to the Atomic Energy Act (42 U.S.C. 218(c)).

7. A record from this system of records may be disclosed, as a routine use, to the Administrator, General Services, or his/her designee, during an inspection of records conducted by GSA as part of that agency's responsibility to recommend improvements in records management practices and programs, under authority of 44 U.S.C. 2904 and 2906. Such disclosure shall be made in accordance with the GSA regulations governing inspection of records for this purpose, and any other relevant (i.e., GSA or Commerce) directive. Such disclosure shall not be used to make determinations about individuals.

8. A record from this system of records may be disclosed, as a routine use, to the public after either publication of the application pursuant to 35 U.S.C. 122(b) or issuance of a patent pursuant to 35 U.S.C. 151. Further, a record may be disclosed, subject to the limitations of 37 CFR 1.14, as a routine use, to the public if the record was filed in an application which became abandoned or in which the proceedings were terminated and which application is referenced by either a published application, an application open to public inspections or an issued patent.

9. A record from this system of records may be disclosed, as a routine use, to a Federal, State, or local law enforcement agency, if the USPTO becomes aware of a violation or potential violation of law or regulation.

UNITED STATES PATENT AND TRADEMARK OFFICE

Commissioner for Patents
United States Patent and Trademark Office
P.O. Box 1450
Alexandria, VA 22313-1450
www.uspto.gov

HUNTON & WILLIAMS LLP
INTELLECTUAL PROPERTY DEPARTMENT
2200 PENNSYLVANIA AVENUE, N.W.
WASHINGTON DC 20037

MAILED
OCT 26 2011
OFFICE OF PETITIONS

In re Patent No. 6,201,072 :
Issued: March 13, 2001 :
Application No. 09/396,589 : ON PETITION
Filed: September 15, 1999 :
Attorney Docket No. 68936.001040 :

This is a notice regarding your request for acceptance of a fee deficiency submission under 37 CFR 1.28 filed September 23, 2011.

On September 1, 1998, the Court of Appeals for the Federal Circuit held that 37 CFR 1.28(c) is the sole provision governing the time for correction of the erroneous payment of the issue fee as a small entity. **See DH Technology v. Synergystex International, Inc. 154 F.3d 1333, 47 USPQ2d 1865 (Fed. Cir. Sept. 1, 1998).**

The Office no longer investigates or rejects original or reissue applications under 37 CFR 1.56. **1098 Off. Gaz. Pat. Office 502 (January 3, 1989)**. Therefore, nothing in this Notice is intended to imply that an investigation was done.

Your fee deficiency submission under 37 CFR 1.28 is hereby **ACCEPTED**.

This patent is no longer entitled to small entity status. Accordingly, all future fees paid in this patent must be paid at the large entity rate.

Additionally, petitioner has submitted an overpayment of $1,570.00. This overage will be refunded to petitioner's deposit account in due course.

Telephone inquiries concerning this decision should be directed to the undersigned at (571) 272-7751.

/Joan Olszewski/
Joan Olszewski
Petitions Examiner
Office of Petitions

UNITED STATES PATENT AND TRADEMARK OFFICE

Commissioner for Patents
United States Patent and Trademark Office
P.O. Box 1450
Alexandria, VA 22313-1450
www.uspto.gov

HUNTON & WILLIAMS LLP
INTELLECTUAL PROPERTY DEPARTMENT
2300 PENNSYLVANIA AVENUE, N.W.
WASHINGTON DC 20037

MAILED
FEB 16 2012
OFFICE OF PETITIONS

In re Patent No. 6,201,072
Issue Date: March 13, 2001
Application No. 09/396,589
Filed: September 15, 1999
Attorney Docket No. 68936.001040

DECISION ON REQUEST FOR REFUND

This is a decision on the Request For Refund filed February 3, 2012.

The request is **DISMISSED**.

Applicants files the request for refund of $1,300.00 and states that "The reason for this Request is as follows: When filing Notice Of Loss Of Entitlement To Small Entity Status And Payment Of Additional Fees on September 23, 2011, Applicants inadvertently paid this fee."

However, the Notice Of Loss Of Entitlement To Small Entity Status And Payment Of Additional Fees (Notice) on September 23, 2011, indicated that small entity status occurred prior to payment of the eight (8th yr.) maintenance fee, which was paid at the small entity rate on September 15, 2008.

The Notice of September 23, 2011, authorized the payment of $2,870.00, which occurred on Accounting Date of October 5, 2011.

A review of the Office finance records shows that the $2,870.00 deposit account sale was reversed on October 26, 2011 and a new deposit account sale was processed in the amount of $1,300.00 for the large entity portion of the 8th year maintenance fee payment ($2480.00 - $1,180.00) = $1300.00. A total of $1,570.00 ($2,870.00 - $1,300.00) was applied back to applicant's deposit account on October 26, 2011.

In view of the above, the request for refund is dismissed.

Any questions concerning this matter may be directed to the undersigned at (571) 272-3208.

/KOC/
Karen Creasy
Petitions Examiner
Office of Petitions

PTO/SB/66 (03-09)
Approved for use through 03/31/2012. OMB 0651-0016
U.S. Patent and Trademark Office: U.S. DEPARTMENT OF COMMERCE
Under the Paperwork Reduction Act of 1995, no persons are required to respond to a collection of information unless it displays valid OMB control number.

PETITION TO ACCEPT UNINTENTIONALLY DELAYED PAYMENT OF MAINTENANCE FEE IN AN EXPIRED PATENT (37 CFR 1.378(c))

Patent Number	Issue Date (YYYY-MM-DD)	Application Number	Filing Date (YYYY-MM-DD)	Docket Number (if applicable)
6458446	2002-10-01	09396818	1999-09-14	PUR03 P-102

CAUTION: Maintenance fee (and surcharge, if any) payment must correctly identify: (1) the patent number and (2) the application number of the actual U.S. application leading to issuance of that patent to ensure the fee(s) is/are associated with the correct patent. 37 CFR 1.366(c) and (d).

SMALL ENTITY

☒ Patentee claims, or has previously claimed, small entity status. See 37 CFR 1.27.

LOSS OF ENTITLEMENT TO SMALL ENTITY STATUS

☐ Patentee is no longer entitled to small entity status. See 37 CFR 1.27(g)

NOT Small Entity	Fee	Code	Small Entity	Fee	Code
○	3 ½ year	(1551)	○	3 ½ year	(2551)
○	7 ½ year	(1552)	◉	7 ½ year	(2552)
○	11 ½ year	(1553)	○	11 ½ year	(2553)

SURCHARGE

The surcharge required by 37 CFR 1.20(i)(2) (Fee Code 1558) must be paid as a condition of accepting unintentionally delayed payment of the maintenance fee.

MAINTENANCE FEE (37 CFR 1.20(e)-(g))

The appropriate maintenance fee must be submitted with this petition.

STATEMENT

THE UNDERSIGNED CERTIFIES THAT THE DELAY IN PAYMENT OF THE MAINTENANCE FEE TO THIS PATENT WAS UNINTENTIONAL

PETITIONER(S) REQUEST THAT THE DELAYED PAYMENT OF THE MAINTENANCE FEE BE ACCEPTED AND THE PATENT REINSTATED

THIS PORTION MUST BE COMPLETED BY THE SIGNATORY OR SIGNATORIES

37 CFR 1.378(d) states: "Any petition under this section must be signed by an attorney or agent registered to practice before the Patent and Trademark Office, or by the patentee, the assignee, or other party in interest."

I certify, in accordance with 37 CFR 1.4(d)(4) that I am

◉ An attorney or agent registered to practice before the Patent and Trademark Office

○ A sole patentee

○ A joint patentee; I certify that I am authorized to sign this submission on behalf of all the other patentees.

○ A joint patentee; all of whom are signing this e-petition

○ The assignee of record of the entire interest

PTO/SB/66 (03-09)
Approved for use through 03/31/2012. OMB 0651-0016
U.S. Patent and Trademark Office: U.S. DEPARTMENT OF COMMERCE
Under the Paperwork Reduction Act of 1995, no persons are required to respond to a collection of information unless it displays valid OMB control number.

Patent Practitioner			
A signature of the applicant or representative is required in accordance with 37 CFR 1.33 and 10.18. Please see 37 CFR 1.4(d) for the form of the signature			
Signature	/taf/	Date (YYYY-MM-DD)	2011-01-20
Name	Timothy A. Flory	Registration Number	42540

This collection of information is required by 37 CFR 1.378(c). The information is required to obtain or retain a benefit by the public which is to file (and by the USPTO to process) an application. Confidentiality is governed by 35 U.S.C. 122 and 37 CFR 1.11 and 1.14. This collection is estimated to take 1 hour to complete, including gathering, preparing, and submitting the completed application form to the USPTO. Time will vary depending upon the individual case. Any comments on the amount of time you require to complete this form and/ or suggestions for reducing this burden, should be sent to the Chief Information Officer, U.S. Patent and Trademark Office, U.S. Department of Commerce, P.O. Box 1450, Alexandria, VA 22313-1450. DO NOT SEND FEES OR COMPLETED FORMS TO THIS ADDRESS. **This form can only be used when in conjunction with EFS-Web. If this form is mailed to the USPTO, it may cause delays in reinstating the patent.**

Privacy Act Statement

The Privacy Act of 1974 (P.L. 93-579) requires that you be given certain information in connection with your submission of the attached form related to a patent application or patent. Accordingly, pursuant to the requirements of the Act, please be advised that: (1) the general authority for the collection of this information is 35 U.S.C. 2(b)(2); (2) furnishing of the information solicited is voluntary; and (3) the principal purpose for which the information is used by the U.S. Patent and Trademark Office is to process and/or examine your submission related to a patent application or patent. If you do not furnish the requested information, the U.S. Patent and Trademark Office may not be able to process and/or examine your submission, which may result in termination of proceedings or abandonment of the application or expiration of the patent.

The information provided by you in this form will be subject to the following routine uses:

1. The information on this form will be treated confidentially to the extent allowed under the Freedom of Information Act (5 U.S.C. 552) and the Privacy Act (5 U.S.C. 552a). Records from this system of records may be disclosed to the Department of Justice to determine whether the Freedom of Information Act requires disclosure of these records.

2. A record from this system of records may be disclosed, as a routine use, in the course of presenting evidence to a court, magistrate, or administrative tribunal, including disclosures to opposing counsel in the course of settlement negotiations.

3. A record in this system of records may be disclosed, as a routine use, to a Member of Congress submitting a request involving an individual, to whom the record pertains, when the individual has requested assistance from the Member with respect to the subject matter of the record.

4. A record in this system of records may be disclosed, as a routine use, to a contractor of the Agency having need for the information in order to perform a contract. Recipients of information shall be required to comply with the requirements of the Privacy Act of 1974, as amended, pursuant to 5 U.S.C. 552a(m).

5. A record related to an International Application filed under the Patent Cooperation Treaty in this system of records may be disclosed, as a routine use, to the International Bureau of the World Intellectual Property Organization, pursuant to the Patent Cooperation Treaty.

6. A record in this system of records may be disclosed, as a routine use, to another federal agency for purposes of National Security review (35 U.S.C. 181) and for review pursuant to the Atomic Energy Act (42 U.S.C. 218(c)).

7. A record from this system of records may be disclosed, as a routine use, to the Administrator, General Services, or his/her designee, during an inspection of records conducted by GSA as part of that agency's responsibility to recommend improvements in records management practices and programs, under authority of 44 U.S.C. 2904 and 2906. Such disclosure shall be made in accordance with the GSA regulations governing inspection of records for this purpose, and any other relevant (i.e., GSA or Commerce) directive. Such disclosure shall not be used to make determinations about individuals.

8. A record from this system of records may be disclosed, as a routine use, to the public after either publication of the application pursuant to 35 U.S.C. 122(b) or issuance of a patent pursuant to 35 U.S.C. 151. Further, a record may be disclosed, subject to the limitations of 37 CFR 1.14, as a routine use, to the public if the record was filed in an application which became abandoned or in which the proceedings were terminated and which application is referenced by either a published application, an application open to public inspections or an issued patent.

9. A record from this system of records may be disclosed, as a routine use, to a Federal, State, or local law enforcement agency, if the USPTO becomes aware of a violation or potential violation of law or regulation.

UNITED STATES PATENT AND TRADEMARK OFFICE

Commissioner for Patents
United States Patent and Trademark Office
P.O. Box 1450
Alexandria, VA 22313-1450
www.uspto.gov

In re Patent No. 6458446
Issue Date: October 1,2002
Application No. 09396818
Filed: September 14,1999
Attorney Docket No. ARP-101-A

:
:DECISION GRANTING PETITION
:UNDER 37 CFR 1.378(c)
:

This is a decision on the electronic petition, filed January 20,2011 ,under 37 CFR 1.378(c) to accept the unintentionally delayed payment of the 7.5 year maintenance fee for the above-identified patent.

The petition is **GRANTED**.

The maintenance fee is accepted, and the above-identified patent reinstated as of January 20,2011 .
This decision also constitutes notice that the fee has been accepted. An electronic copy of the petition and this decision has been created as an entry in the Image File Wrapper. Nevertheless, petitioner should print and retain an independent copy.

Telephone inquiries related to this electronic decision should be directed to the Electronic Business Center at 1-866-217-9197.

PTO/SB/66 (03-09)
Approved for use through 03/31/2012. OMB 0651-0016
U.S. Patent and Trademark Office: U.S. DEPARTMENT OF COMMERCE
Under the Paperwork Reduction Act of 1995, no persons are required to respond to a collection of information unless it displays valid OMB control number.

PETITION TO ACCEPT UNINTENTIONALLY DELAYED PAYMENT OF MAINTENANCE FEE IN AN EXPIRED PATENT (37 CFR 1.378(c))

Patent Number	Issue Date (YYYY-MM-DD)	Application Number	Filing Date (YYYY-MM-DD)	Docket Number (if applicable)
6,358,491	2002-03-19	09/397,792	1999-09-16	16869.0001USU1

CAUTION: Maintenance fee (and surcharge, if any) payment must correctly identify: (1) the patent number and (2) the application number of the actual U.S. application leading to issuance of that patent to ensure the fee(s) is/are associated with the correct patent. 37 CFR 1.366(c) and (d).

SMALL ENTITY

☒ Patentee claims, or has previously claimed, small entity status. See 37 CFR 1.27.

LOSS OF ENTITLEMENT TO SMALL ENTITY STATUS

☐ Patentee is no longer entitled to small entity status. See 37 CFR 1.27(g)

NOT Small Entity	Fee	Code	Small Entity	Fee	Code
○	3 ½ year	(1551)	○	3 ½ year	(2551)
○	7 ½ year	(1552)	◉	7 ½ year	(2552)
○	11 ½ year	(1553)	○	11 ½ year	(2553)

SURCHARGE

The surcharge required by 37 CFR 1.20(i)(2) (Fee Code 1558) must be paid as a condition of accepting unintentionally delayed payment of the maintenance fee.

MAINTENANCE FEE (37 CFR 1.20(e)-(g))

The appropriate maintenance fee must be submitted with this petition.

STATEMENT

THE UNDERSIGNED CERTIFIES THAT THE DELAY IN PAYMENT OF THE MAINTENANCE FEE TO THIS PATENT WAS UNINTENTIONAL

PETITIONER(S) REQUEST THAT THE DELAYED PAYMENT OF THE MAINTENANCE FEE BE ACCEPTED AND THE PATENT REINSTATED

THIS PORTION MUST BE COMPLETED BY THE SIGNATORY OR SIGNATORIES

37 CFR 1.378(d) states: "Any petition under this section must be signed by an attorney or agent registered to practice before the Patent and Trademark Office, or by the patentee, the assignee, or other party in interest."

I certify, in accordance with 37 CFR 1.4(d)(4) that I am

◉ An attorney or agent registered to practice before the Patent and Trademark Office

○ A sole patentee

○ A joint patentee; I certify that I am authorized to sign this submission on behalf of all the other patentees.

○ A joint patentee; all of whom are signing this e-petition

○ The assignee of record of the entire interest

PTO/SB/66 (03-09)
Approved for use through 03/31/2012. OMB 0651-0016
U.S. Patent and Trademark Office: U.S. DEPARTMENT OF COMMERCE
Under the Paperwork Reduction Act of 1995, no persons are required to respond to a collection of information unless it displays valid OMB control number.

Patent Practitioner			
A signature of the applicant or representative is required in accordance with 37 CFR 1.33 and 10.18. Please see 37 CFR 1.4(d) for the form of the signature			
Signature	/Dianna Goldenson/	Date (YYYY-MM-DD)	2011-07-08
Name	Dianna Goldenson	Registration Number	52949

This collection of information is required by 37 CFR 1.378(c). The information is required to obtain or retain a benefit by the public which is to file (and by the USPTO to process) an application. Confidentiality is governed by 35 U.S.C. 122 and 37 CFR 1.11 and 1.14. This collection is estimated to take 1 hour to complete, including gathering, preparing, and submitting the completed application form to the USPTO. Time will vary depending upon the individual case. Any comments on the amount of time you require to complete this form and/ or suggestions for reducing this burden, should be sent to the Chief Information Officer, U.S. Patent and Trademark Office, U.S. Department of Commerce, P.O. Box 1450, Alexandria, VA 22313-1450. DO NOT SEND FEES OR COMPLETED FORMS TO THIS ADDRESS. **This form can only be used when in conjunction with EFS-Web. If this form is mailed to the USPTO, it may cause delays in reinstating the patent.**

Privacy Act Statement

The Privacy Act of 1974 (P.L. 93-579) requires that you be given certain information in connection with your submission of the attached form related to a patent application or patent. Accordingly, pursuant to the requirements of the Act, please be advised that: (1) the general authority for the collection of this information is 35 U.S.C. 2(b)(2); (2) furnishing of the information solicited is voluntary; and (3) the principal purpose for which the information is used by the U.S. Patent and Trademark Office is to process and/or examine your submission related to a patent application or patent. If you do not furnish the requested information, the U.S. Patent and Trademark Office may not be able to process and/or examine your submission, which may result in termination of proceedings or abandonment of the application or expiration of the patent.

The information provided by you in this form will be subject to the following routine uses:

1. The information on this form will be treated confidentially to the extent allowed under the Freedom of Information Act (5 U.S.C. 552) and the Privacy Act (5 U.S.C. 552a). Records from this system of records may be disclosed to the Department of Justice to determine whether the Freedom of Information Act requires disclosure of these records.

2. A record from this system of records may be disclosed, as a routine use, in the course of presenting evidence to a court, magistrate, or administrative tribunal, including disclosures to opposing counsel in the course of settlement negotiations.

3. A record in this system of records may be disclosed, as a routine use, to a Member of Congress submitting a request involving an individual, to whom the record pertains, when the individual has requested assistance from the Member with respect to the subject matter of the record.

4. A record in this system of records may be disclosed, as a routine use, to a contractor of the Agency having need for the information in order to perform a contract. Recipients of information shall be required to comply with the requirements of the Privacy Act of 1974, as amended, pursuant to 5 U.S.C. 552a(m).

5. A record related to an International Application filed under the Patent Cooperation Treaty in this system of records may be disclosed, as a routine use, to the International Bureau of the World Intellectual Property Organization, pursuant to the Patent Cooperation Treaty.

6. A record in this system of records may be disclosed, as a routine use, to another federal agency for purposes of National Security review (35 U.S.C. 181) and for review pursuant to the Atomic Energy Act (42 U.S.C. 218(c)).

7. A record from this system of records may be disclosed, as a routine use, to the Administrator, General Services, or his/her designee, during an inspection of records conducted by GSA as part of that agency's responsibility to recommend improvements in records management practices and programs, under authority of 44 U.S.C. 2904 and 2906. Such disclosure shall be made in accordance with the GSA regulations governing inspection of records for this purpose, and any other relevant (i.e., GSA or Commerce) directive. Such disclosure shall not be used to make determinations about individuals.

8. A record from this system of records may be disclosed, as a routine use, to the public after either publication of the application pursuant to 35 U.S.C. 122(b) or issuance of a patent pursuant to 35 U.S.C. 151. Further, a record may be disclosed, subject to the limitations of 37 CFR 1.14, as a routine use, to the public if the record was filed in an application which became abandoned or in which the proceedings were terminated and which application is referenced by either a published application, an application open to public inspections or an issued patent.

9. A record from this system of records may be disclosed, as a routine use, to a Federal, State, or local law enforcement agency, if the USPTO becomes aware of a violation or potential violation of law or regulation.

UNITED STATES PATENT AND TRADEMARK OFFICE

Commissioner for Patents
United States Patent and Trademark Office
P.O. Box 1450
Alexandria, VA 22313-1450
www.uspto.gov

In re Patent No. 6358491
Issue Date: March 19,2002
Application No. 09397792
Filed: September 16,1999
Attorney Docket No. DITI-134

:
:DECISION GRANTING PETITION
:UNDER 37 CFR 1.378(c)
:

This is a decision on the electronic petition, filed July 8,2011 ,under 37 CFR 1.378(c) to accept the unintentionally delayed payment of the 7.5 year maintenance fee for the above-identified patent.

The petition is **GRANTED**.

The maintenance fee is accepted, and the above-identified patent reinstated as of July 8,2011 .
This decision also constitutes notice that the fee has been accepted. An electronic copy of the petition and this decision has been created as an entry in the Image File Wrapper. Nevertheless, petitioner should print and retain an independent copy.

Telephone inquiries related to this electronic decision should be directed to the Electronic Business Center at 1-866-217-9197.

UNITED STATES PATENT AND TRADEMARK OFFICE

Commissioner for Patents
United States Patent and Trademark Office
P.O. Box 1450
Alexandria, VA 22313-1450
www.uspto.gov

In re Patent No. 6293356
Issue Date: September 25,2001
Application No. 09398674
Filed: September 17,1999
Attorney Docket No. 60134.09990

:
:DECISION GRANTING PETITION
:UNDER 37 CFR 1.378(c)
:

This is a decision on the electronic petition, filed November 19,2010 ,under 37 CFR 1.378(c) to accept the unintentionally delayed payment of the 7.5 year maintenance fee for the above-identified patent.

The petition is **GRANTED**.

The maintenance fee is accepted, and the above-identified patent reinstated as of November 19,2010 . This decision also constitutes notice that the fee has been accepted. An electronic copy of the petition and this decision has been created as an entry in the Image File Wrapper. Nevertheless, petitioner should print and retain an independent copy.

Telephone inquiries related to this electronic decision should be directed to the Electronic Business Center at 1-866-217-9197.

PTO/SB/66 (03-09)
Approved for use through 03/31/2012. OMB 0651-0016
U.S. Patent and Trademark Office: U.S. DEPARTMENT OF COMMERCE
Under the Paperwork Reduction Act of 1995, no persons are required to respond to a collection of information unless it displays valid OMB control number.

PETITION TO ACCEPT UNINTENTIONALLY DELAYED PAYMENT OF MAINTENANCE FEE IN AN EXPIRED PATENT (37 CFR 1.378(c))

Patent Number	Issue Date (YYYY-MM-DD)	Application Number	Filing Date (YYYY-MM-DD)	Docket Number (if applicable)
6293356	2001-09-25	09398674	1999-09-17	

CAUTION: Maintenance fee (and surcharge, if any) payment must correctly identify: (1) the patent number and (2) the application number of the actual U.S. application leading to issuance of that patent to ensure the fee(s) is/are associated with the correct patent. 37 CFR 1.366(c) and (d).

SMALL ENTITY

☐ Patentee claims, or has previously claimed, small entity status. See 37 CFR 1.27.

LOSS OF ENTITLEMENT TO SMALL ENTITY STATUS

☐ Patentee is no longer entitled to small entity status. See 37 CFR 1.27(g)

NOT Small Entity

	Fee	Code
○	3 ½ year	(1551)
◉	7 ½ year	(1552)
○	11 ½ year	(1553)

Small Entity

	Fee	Code
○	3 ½ year	(2551)
○	7 ½ year	(2552)
○	11 ½ year	(2553)

SURCHARGE

The surcharge required by 37 CFR 1.20(i)(2) (Fee Code 1558) must be paid as a condition of accepting unintentionally delayed payment of the maintenance fee.

MAINTENANCE FEE (37 CFR 1.20(e)-(g))

The appropriate maintenance fee must be submitted with this petition.

STATEMENT

THE UNDERSIGNED CERTIFIES THAT THE DELAY IN PAYMENT OF THE MAINTENANCE FEE TO THIS PATENT WAS UNINTENTIONAL

PETITIONER(S) REQUEST THAT THE DELAYED PAYMENT OF THE MAINTENANCE FEE BE ACCEPTED AND THE PATENT REINSTATED

THIS PORTION MUST BE COMPLETED BY THE SIGNATORY OR SIGNATORIES

37 CFR 1.378(d) states: "Any petition under this section must be signed by an attorney or agent registered to practice before the Patent and Trademark Office, or by the patentee, the assignee, or other party in interest."

I certify, in accordance with 37 CFR 1.4(d)(4) that I am

◉ An attorney or agent registered to practice before the Patent and Trademark Office

○ A sole patentee

○ A joint patentee; I certify that I am authorized to sign this submission on behalf of all the other patentees.

○ A joint patentee; all of whom are signing this e-petition

○ The assignee of record of the entire interest

PTO/SB/66 (03-09)
Approved for use through 03/31/2012. OMB 0651-0016
U.S. Patent and Trademark Office: U.S. DEPARTMENT OF COMMERCE
Under the Paperwork Reduction Act of 1995, no persons are required to respond to a collection of information unless it displays valid OMB control number.

Patent Practitioner			
A signature of the applicant or representative is required in accordance with 37 CFR 1.33 and 10.18. Please see 37 CFR 1.4(d) for the form of the signature			
Signature	/Jonathan E. Jobe/	Date (YYYY-MM-DD)	2010-11-19
Name	Jonathan E. Jobe	Registration Number	28429

This collection of information is required by 37 CFR 1.378(c). The information is required to obtain or retain a benefit by the public which is to file (and by the USPTO to process) an application. Confidentiality is governed by 35 U.S.C. 122 and 37 CFR 1.11 and 1.14. This collection is estimated to take 1 hour to complete, including gathering, preparing, and submitting the completed application form to the USPTO. Time will vary depending upon the individual case. Any comments on the amount of time you require to complete this form and/ or suggestions for reducing this burden, should be sent to the Chief Information Officer, U.S. Patent and Trademark Office, U.S. Department of Commerce, P.O. Box 1450, Alexandria, VA 22313-1450. DO NOT SEND FEES OR COMPLETED FORMS TO THIS ADDRESS. **This form can only be used when in conjunction with EFS-Web. If this form is mailed to the USPTO, it may cause delays in reinstating the patent.**

Privacy Act Statement

The Privacy Act of 1974 (P.L. 93-579) requires that you be given certain information in connection with your submission of the attached form related to a patent application or patent. Accordingly, pursuant to the requirements of the Act, please be advised that: (1) the general authority for the collection of this information is 35 U.S.C. 2(b)(2); (2) furnishing of the information solicited is voluntary; and (3) the principal purpose for which the information is used by the U.S. Patent and Trademark Office is to process and/or examine your submission related to a patent application or patent. If you do not furnish the requested information, the U.S. Patent and Trademark Office may not be able to process and/or examine your submission, which may result in termination of proceedings or abandonment of the application or expiration of the patent.

The information provided by you in this form will be subject to the following routine uses:

1. The information on this form will be treated confidentially to the extent allowed under the Freedom of Information Act (5 U.S.C. 552) and the Privacy Act (5 U.S.C. 552a). Records from this system of records may be disclosed to the Department of Justice to determine whether the Freedom of Information Act requires disclosure of these records.

2. A record from this system of records may be disclosed, as a routine use, in the course of presenting evidence to a court, magistrate, or administrative tribunal, including disclosures to opposing counsel in the course of settlement negotiations.

3. A record in this system of records may be disclosed, as a routine use, to a Member of Congress submitting a request involving an individual, to whom the record pertains, when the individual has requested assistance from the Member with respect to the subject matter of the record.

4. A record in this system of records may be disclosed, as a routine use, to a contractor of the Agency having need for the information in order to perform a contract. Recipients of information shall be required to comply with the requirements of the Privacy Act of 1974, as amended, pursuant to 5 U.S.C. 552a(m).

5. A record related to an International Application filed under the Patent Cooperation Treaty in this system of records may be disclosed, as a routine use, to the International Bureau of the World Intellectual Property Organization, pursuant to the Patent Cooperation Treaty.

6. A record in this system of records may be disclosed, as a routine use, to another federal agency for purposes of National Security review (35 U.S.C. 181) and for review pursuant to the Atomic Energy Act (42 U.S.C. 218(c)).

7. A record from this system of records may be disclosed, as a routine use, to the Administrator, General Services, or his/her designee, during an inspection of records conducted by GSA as part of that agency's responsibility to recommend improvements in records management practices and programs, under authority of 44 U.S.C. 2904 and 2906. Such disclosure shall be made in accordance with the GSA regulations governing inspection of records for this purpose, and any other relevant (i.e., GSA or Commerce) directive. Such disclosure shall not be used to make determinations about individuals.

8. A record from this system of records may be disclosed, as a routine use, to the public after either publication of the application pursuant to 35 U.S.C. 122(b) or issuance of a patent pursuant to 35 U.S.C. 151. Further, a record may be disclosed, subject to the limitations of 37 CFR 1.14, as a routine use, to the public if the record was filed in an application which became abandoned or in which the proceedings were terminated and which application is referenced by either a published application, an application open to public inspections or an issued patent.

9. A record from this system of records may be disclosed, as a routine use, to a Federal, State, or local law enforcement agency, if the USPTO becomes aware of a violation or potential violation of law or regulation.

UNITED STATES PATENT AND TRADEMARK OFFICE

Commissioner for Patents
United States Patent and Trademark Office
P.O. Box 1450
Alexandria, VA 22313-1450
www.uspto.gov

In re Patent No. 6215518
Issue Date: April 10,2001
Application No. 09398910
Filed: September 14,1999
Attorney Docket No. 6W10-023

:
:DECISION GRANTING PETITION
:UNDER 37 CFR 1.378(c)
:

This is a decision on the electronic petition, filed April 8,2011 ,under 37 CFR 1.378(c) to accept the unintentionally delayed payment of the 7.5 year maintenance fee for the above-identified patent.

The petition is **GRANTED**.

The maintenance fee is accepted, and the above-identified patent reinstated as of April 8,2011 .
This decision also constitutes notice that the fee has been accepted. An electronic copy of the petition and this decision has been created as an entry in the Image File Wrapper. Nevertheless, petitioner should print and retain an independent copy.

Telephone inquiries related to this electronic decision should be directed to the Electronic Business Center at 1-866-217-9197.

PTO/SB/66 (03-09)
Approved for use through 03/31/2012. OMB 0651-0016
U.S. Patent and Trademark Office: U.S. DEPARTMENT OF COMMERCE
Under the Paperwork Reduction Act of 1995, no persons are required to respond to a collection of information unless it displays valid OMB control number.

PETITION TO ACCEPT UNINTENTIONALLY DELAYED PAYMENT OF MAINTENANCE FEE IN AN EXPIRED PATENT (37 CFR 1.378(c))

Patent Number	Issue Date (YYYY-MM-DD)	Application Number	Filing Date (YYYY-MM-DD)	Docket Number (if applicable)
6215518	2001-04-10	09398910	1999-09-14	2170162-000010

CAUTION: Maintenance fee (and surcharge, if any) payment must correctly identify: (1) the patent number and (2) the application number of the actual U.S. application leading to issuance of that patent to ensure the fee(s) is/are associated with the correct patent. 37 CFR 1.366(c) and (d).

SMALL ENTITY

☒ Patentee claims, or has previously claimed, small entity status. See 37 CFR 1.27.

LOSS OF ENTITLEMENT TO SMALL ENTITY STATUS

☐ Patentee is no longer entitled to small entity status. See 37 CFR 1.27(g)

NOT Small Entity			Small Entity		
	Fee	Code		Fee	Code
○	3 ½ year	(1551)	○	3 ½ year	(2551)
○	7 ½ year	(1552)	◉	7 ½ year	(2552)
○	11 ½ year	(1553)	○	11 ½ year	(2553)

SURCHARGE

The surcharge required by 37 CFR 1.20(i)(2) (Fee Code 1558) must be paid as a condition of accepting unintentionally delayed payment of the maintenance fee.

MAINTENANCE FEE (37 CFR 1.20(e)-(g))

The appropriate maintenance fee must be submitted with this petition.

STATEMENT

THE UNDERSIGNED CERTIFIES THAT THE DELAY IN PAYMENT OF THE MAINTENANCE FEE TO THIS PATENT WAS UNINTENTIONAL

PETITIONER(S) REQUEST THAT THE DELAYED PAYMENT OF THE MAINTENANCE FEE BE ACCEPTED AND THE PATENT REINSTATED

THIS PORTION MUST BE COMPLETED BY THE SIGNATORY OR SIGNATORIES

37 CFR 1.378(d) states: "Any petition under this section must be signed by an attorney or agent registered to practice before the Patent and Trademark Office, or by the patentee, the assignee, or other party in interest."

I certify, in accordance with 37 CFR 1.4(d)(4) that I am

○ An attorney or agent registered to practice before the Patent and Trademark Office

◉ A sole patentee

○ A joint patentee; I certify that I am authorized to sign this submission on behalf of all the other patentees.

○ A joint patentee; all of whom are signing this e-petition

○ The assignee of record of the entire interest

PTO/SB/66 (03-09)
Approved for use through 03/31/2012. OMB 0651-0016
U.S. Patent and Trademark Office: U.S. DEPARTMENT OF COMMERCE
Under the Paperwork Reduction Act of 1995, no persons are required to respond to a collection of information unless it displays valid OMB control number.

Sole Patentee			
A signature of the applicant or representative is required in accordance with 37 CFR 1.33 and 10.18. Please see 37 CFR 1.4(d) for the form of the signature.			
Signature	/d scott watkins/	Date (YYYY-MM-DD)	2011-03-04
Name	D. Scott Watkins		

This collection of information is required by 37 CFR 1.378(c). The information is required to obtain or retain a benefit by the public which is to file (and by the USPTO to process) an application. Confidentiality is governed by 35 U.S.C. 122 and 37 CFR 1.11 and 1.14. This collection is estimated to take 1 hour to complete, including gathering, preparing, and submitting the completed application form to the USPTO. Time will vary depending upon the individual case. Any comments on the amount of time you require to complete this form and/ or suggestions for reducing this burden, should be sent to the Chief Information Officer, U.S. Patent and Trademark Office, U.S. Department of Commerce, P.O. Box 1450, Alexandria, VA 22313-1450. DO NOT SEND FEES OR COMPLETED FORMS TO THIS ADDRESS. **This form can only be used when in conjunction with EFS-Web. If this form is mailed to the USPTO, it may cause delays in reinstating the patent.**

Privacy Act Statement

The Privacy Act of 1974 (P.L. 93-579) requires that you be given certain information in connection with your submission of the attached form related to a patent application or patent. Accordingly, pursuant to the requirements of the Act, please be advised that: (1) the general authority for the collection of this information is 35 U.S.C. 2(b)(2); (2) furnishing of the information solicited is voluntary; and (3) the principal purpose for which the information is used by the U.S. Patent and Trademark Office is to process and/or examine your submission related to a patent application or patent. If you do not furnish the requested information, the U.S. Patent and Trademark Office may not be able to process and/or examine your submission, which may result in termination of proceedings or abandonment of the application or expiration of the patent.

The information provided by you in this form will be subject to the following routine uses:

1. The information on this form will be treated confidentially to the extent allowed under the Freedom of Information Act (5 U.S.C. 552) and the Privacy Act (5 U.S.C. 552a). Records from this system of records may be disclosed to the Department of Justice to determine whether the Freedom of Information Act requires disclosure of these records.

2. A record from this system of records may be disclosed, as a routine use, in the course of presenting evidence to a court, magistrate, or administrative tribunal, including disclosures to opposing counsel in the course of settlement negotiations.

3. A record in this system of records may be disclosed, as a routine use, to a Member of Congress submitting a request involving an individual, to whom the record pertains, when the individual has requested assistance from the Member with respect to the subject matter of the record.

4. A record in this system of records may be disclosed, as a routine use, to a contractor of the Agency having need for the information in order to perform a contract. Recipients of information shall be required to comply with the requirements of the Privacy Act of 1974, as amended, pursuant to 5 U.S.C. 552a(m).

5. A record related to an International Application filed under the Patent Cooperation Treaty in this system of records may be disclosed, as a routine use, to the International Bureau of the World Intellectual Property Organization, pursuant to the Patent Cooperation Treaty.

6. A record in this system of records may be disclosed, as a routine use, to another federal agency for purposes of National Security review (35 U.S.C. 181) and for review pursuant to the Atomic Energy Act (42 U.S.C. 218(c)).

7. A record from this system of records may be disclosed, as a routine use, to the Administrator, General Services, or his/her designee, during an inspection of records conducted by GSA as part of that agency's responsibility to recommend improvements in records management practices and programs, under authority of 44 U.S.C. 2904 and 2906. Such disclosure shall be made in accordance with the GSA regulations governing inspection of records for this purpose, and any other relevant (i.e., GSA or Commerce) directive. Such disclosure shall not be used to make determinations about individuals.

8. A record from this system of records may be disclosed, as a routine use, to the public after either publication of the application pursuant to 35 U.S.C. 122(b) or issuance of a patent pursuant to 35 U.S.C. 151. Further, a record may be disclosed, subject to the limitations of 37 CFR 1.14, as a routine use, to the public if the record was filed in an application which became abandoned or in which the proceedings were terminated and which application is referenced by either a published application, an application open to public inspections or an issued patent.

9. A record from this system of records may be disclosed, as a routine use, to a Federal, State, or local law enforcement agency, if the USPTO becomes aware of a violation or potential violation of law or regulation.

PTO/SB/66 (03-09)
Approved for use through 03/31/2012. OMB 0651-0016
U.S. Patent and Trademark Office: U.S. DEPARTMENT OF COMMERCE
Under the Paperwork Reduction Act of 1995, no persons are required to respond to a collection of information unless it displays valid OMB control number.

PETITION TO ACCEPT UNINTENTIONALLY DELAYED PAYMENT OF MAINTENANCE FEE IN AN EXPIRED PATENT (37 CFR 1.378(c))

Patent Number	Issue Date (YYYY-MM-DD)	Application Number	Filing Date (YYYY-MM-DD)	Docket Number (if applicable)
6230400	2001-05-15	09/398,940	1999-09-17	

CAUTION: Maintenance fee (and surcharge, if any) payment must correctly identify: (1) the patent number and (2) the application number of the actual U.S. application leading to issuance of that patent to ensure the fee(s) is/are associated with the correct patent. 37 CFR 1.366(c) and (d).

SMALL ENTITY

☒ Patentee claims, or has previously claimed, small entity status. See 37 CFR 1.27.

LOSS OF ENTITLEMENT TO SMALL ENTITY STATUS

☐ Patentee is no longer entitled to small entity status. See 37 CFR 1.27(g)

NOT Small Entity	Fee	Code	Small Entity	Fee	Code
○	3 ½ year	(1551)	○	3 ½ year	(2551)
○	7 ½ year	(1552)	◉	7 ½ year	(2552)
○	11 ½ year	(1553)	○	11 ½ year	(2553)

SURCHARGE

The surcharge required by 37 CFR 1.20(i)(2) (Fee Code 1558) must be paid as a condition of accepting unintentionally delayed payment of the maintenance fee.

MAINTENANCE FEE (37 CFR 1.20(e)-(g))

The appropriate maintenance fee must be submitted with this petition.

STATEMENT

THE UNDERSIGNED CERTIFIES THAT THE DELAY IN PAYMENT OF THE MAINTENANCE FEE TO THIS PATENT WAS UNINTENTIONAL

PETITIONER(S) REQUEST THAT THE DELAYED PAYMENT OF THE MAINTENANCE FEE BE ACCEPTED AND THE PATENT REINSTATED

THIS PORTION MUST BE COMPLETED BY THE SIGNATORY OR SIGNATORIES

37 CFR 1.378(d) states: "Any petition under this section must be signed by an attorney or agent registered to practice before the Patent and Trademark Office, or by the patentee, the assignee, or other party in interest."

I certify, in accordance with 37 CFR 1.4(d)(4) that I am

○ An attorney or agent registered to practice before the Patent and Trademark Office

○ A sole patentee

◉ A joint patentee; I certify that I am authorized to sign this submission on behalf of all the other patentees.

○ A joint patentee; all of whom are signing this e-petition

○ The assignee of record of the entire interest

PTO/SB/66 (03-09)
Approved for use through 03/31/2012. OMB 0651-0016
U.S. Patent and Trademark Office: U.S. DEPARTMENT OF COMMERCE
Under the Paperwork Reduction Act of 1995, no persons are required to respond to a collection of information unless it displays valid OMB control number.

A Joint Patentee and I certify that I am authorized to sign this submission on behalf of all the other patentees			
A signature of the applicant or representative is required in accordance with 37 CFR 1.33 and 10.18. Please see 37 CFR 1.4(d) for the form of the signature.			
Signature	/Mihalis Michael/	Date (YYYY-MM-DD)	2011-05-12
Name	Mihalis Michael		

This collection of information is required by 37 CFR 1.378(c). The information is required to obtain or retain a benefit by the public which is to file (and by the USPTO to process) an application. Confidentiality is governed by 35 U.S.C. 122 and 37 CFR 1.11 and 1.14. This collection is estimated to take 1 hour to complete, including gathering, preparing, and submitting the completed application form to the USPTO. Time will vary depending upon the individual case. Any comments on the amount of time you require to complete this form and/ or suggestions for reducing this burden, should be sent to the Chief Information Officer, U.S. Patent and Trademark Office, U.S. Department of Commerce, P.O. Box 1450, Alexandria, VA 22313-1450. DO NOT SEND FEES OR COMPLETED FORMS TO THIS ADDRESS. **This form can only be used when in conjunction with EFS-Web. If this form is mailed to the USPTO, it may cause delays in reinstating the patent.**

Privacy Act Statement

The Privacy Act of 1974 (P.L. 93-579) requires that you be given certain information in connection with your submission of the attached form related to a patent application or patent. Accordingly, pursuant to the requirements of the Act, please be advised that: (1) the general authority for the collection of this information is 35 U.S.C. 2(b)(2); (2) furnishing of the information solicited is voluntary; and (3) the principal purpose for which the information is used by the U.S. Patent and Trademark Office is to process and/or examine your submission related to a patent application or patent. If you do not furnish the requested information, the U.S. Patent and Trademark Office may not be able to process and/or examine your submission, which may result in termination of proceedings or abandonment of the application or expiration of the patent.

The information provided by you in this form will be subject to the following routine uses:

1. The information on this form will be treated confidentially to the extent allowed under the Freedom of Information Act (5 U.S.C. 552) and the Privacy Act (5 U.S.C. 552a). Records from this system of records may be disclosed to the Department of Justice to determine whether the Freedom of Information Act requires disclosure of these records.

2. A record from this system of records may be disclosed, as a routine use, in the course of presenting evidence to a court, magistrate, or administrative tribunal, including disclosures to opposing counsel in the course of settlement negotiations.

3. A record in this system of records may be disclosed, as a routine use, to a Member of Congress submitting a request involving an individual, to whom the record pertains, when the individual has requested assistance from the Member with respect to the subject matter of the record.

4. A record in this system of records may be disclosed, as a routine use, to a contractor of the Agency having need for the information in order to perform a contract. Recipients of information shall be required to comply with the requirements of the Privacy Act of 1974, as amended, pursuant to 5 U.S.C. 552a(m).

5. A record related to an International Application filed under the Patent Cooperation Treaty in this system of records may be disclosed, as a routine use, to the International Bureau of the World Intellectual Property Organization, pursuant to the Patent Cooperation Treaty.

6. A record in this system of records may be disclosed, as a routine use, to another federal agency for purposes of National Security review (35 U.S.C. 181) and for review pursuant to the Atomic Energy Act (42 U.S.C. 218(c)).

7. A record from this system of records may be disclosed, as a routine use, to the Administrator, General Services, or his/her designee, during an inspection of records conducted by GSA as part of that agency's responsibility to recommend improvements in records management practices and programs, under authority of 44 U.S.C. 2904 and 2906. Such disclosure shall be made in accordance with the GSA regulations governing inspection of records for this purpose, and any other relevant (i.e., GSA or Commerce) directive. Such disclosure shall not be used to make determinations about individuals.

8. A record from this system of records may be disclosed, as a routine use, to the public after either publication of the application pursuant to 35 U.S.C. 122(b) or issuance of a patent pursuant to 35 U.S.C. 151. Further, a record may be disclosed, subject to the limitations of 37 CFR 1.14, as a routine use, to the public if the record was filed in an application which became abandoned or in which the proceedings were terminated and which application is referenced by either a published application, an application open to public inspections or an issued patent.

9. A record from this system of records may be disclosed, as a routine use, to a Federal, State, or local law enforcement agency, if the USPTO becomes aware of a violation or potential violation of law or regulation.

UNITED STATES PATENT AND TRADEMARK OFFICE

Commissioner for Patents
United States Patent and Trademark Office
P.O. Box 1450
Alexandria, VA 22313-1450
www.uspto.gov

In re Patent No. 6230400
Issue Date: May 15,2001
Application No. 09398940
Filed: September 17,1999
Attorney Docket No. PACK

:
:DECISION GRANTING PETITION
:UNDER 37 CFR 1.378(c)
:

This is a decision on the electronic petition, filed May 12,2011 ,under 37 CFR 1.378(c) to accept the unintentionally delayed payment of the 7.5 year maintenance fee for the above-identified patent.

The petition is **GRANTED**.

The maintenance fee is accepted, and the above-identified patent reinstated as of May 12,2011 . This decision also constitutes notice that the fee has been accepted. An electronic copy of the petition and this decision has been created as an entry in the Image File Wrapper. Nevertheless, petitioner should print and retain an independent copy.

Telephone inquiries related to this electronic decision should be directed to the Electronic Business Center at 1-866-217-9197.

UNITED STATES PATENT AND TRADEMARK OFFICE

Commissioner for Patents
United States Patent and Trademark Office
P.O. Box 1450
Alexandria, VA 22313-1450
www.uspto.gov

In re Patent No. 6398557
Issue Date: June 4,2002
Application No. 09398992
Filed: September 17,1999
Attorney Docket No. 10014-151

:
:DECISION GRANTING PETITION
:UNDER 37 CFR 1.378(c)
:

This is a decision on the electronic petition, filed August 5,2010 ,under 37 CFR 1.378(c) to accept the unintentionally delayed payment of the 7.5 year maintenance fee for the above-identified patent.

The petition is **GRANTED**.

The maintenance fee is accepted, and the above-identified patent reinstated as of August 5,2010 . This decision also constitutes notice that the fee has been accepted. An electronic copy of the petition and this decision has been created as an entry in the Image File Wrapper. Nevertheless, petitioner should print and retain an independent copy.

Telephone inquiries related to this electronic decision should be directed to the Electronic Business Center at 1-866-217-9197.

PTO/SB/66 (03-09)
Approved for use through 03/31/2012. OMB 0651-0016
U.S. Patent and Trademark Office: U.S. DEPARTMENT OF COMMERCE
Under the Paperwork Reduction Act of 1995, no persons are required to respond to a collection of information unless it displays valid OMB control number.

PETITION TO ACCEPT UNINTENTIONALLY DELAYED PAYMENT OF MAINTENANCE FEE IN AN EXPIRED PATENT (37 CFR 1.378(c))

Patent Number	Issue Date (YYYY-MM-DD)	Application Number	Filing Date (YYYY-MM-DD)	Docket Number (if applicable)
6,398,557	2002-06-04	09/398,992	1999-09-17	

CAUTION: Maintenance fee (and surcharge, if any) payment must correctly identify: (1) the patent number and (2) the application number of the actual U.S. application leading to issuance of that patent to ensure the fee(s) is/are associated with the correct patent. 37 CFR 1.366(c) and (d).

SMALL ENTITY

☒ Patentee claims, or has previously claimed, small entity status. See 37 CFR 1.27.

LOSS OF ENTITLEMENT TO SMALL ENTITY STATUS

☐ Patentee is no longer entitled to small entity status. See 37 CFR 1.27(g)

NOT Small Entity			Small Entity		
	Fee	Code		Fee	Code
○	3 ½ year	(1551)	○	3 ½ year	(2551)
○	7 ½ year	(1552)	◉	7 ½ year	(2552)
○	11 ½ year	(1553)	○	11 ½ year	(2553)

SURCHARGE

The surcharge required by 37 CFR 1.20(i)(2) (Fee Code 1558) must be paid as a condition of accepting unintentionally delayed payment of the maintenance fee.

MAINTENANCE FEE (37 CFR 1.20(e)-(g))

The appropriate maintenance fee must be submitted with this petition.

STATEMENT

THE UNDERSIGNED CERTIFIES THAT THE DELAY IN PAYMENT OF THE MAINTENANCE FEE TO THIS PATENT WAS UNINTENTIONAL

PETITIONER(S) REQUEST THAT THE DELAYED PAYMENT OF THE MAINTENANCE FEE BE ACCEPTED AND THE PATENT REINSTATED

THIS PORTION MUST BE COMPLETED BY THE SIGNATORY OR SIGNATORIES

37 CFR 1.378(d) states: "Any petition under this section must be signed by an attorney or agent registered to practice before the Patent and Trademark Office, or by the patentee, the assignee, or other party in interest."

I certify, in accordance with 37 CFR 1.4(d)(4) that I am

◉ An attorney or agent registered to practice before the Patent and Trademark Office

○ A sole patentee

○ A joint patentee; I certify that I am authorized to sign this submission on behalf of all the other patentees.

○ A joint patentee; all of whom are signing this e-petition

○ The assignee of record of the entire interest

PTO/SB/66 (03-09)
Approved for use through 03/31/2012. OMB 0651-0016
U.S. Patent and Trademark Office: U.S. DEPARTMENT OF COMMERCE
Under the Paperwork Reduction Act of 1995, no persons are required to respond to a collection of information unless it displays valid OMB control number.

Patent Practitioner			
A signature of the applicant or representative is required in accordance with 37 CFR 1.33 and 10.18. Please see 37 CFR 1.4(d) for the form of the signature			
Signature	/Douglas G. Gallagher, #57,783/	Date (YYYY-MM-DD)	2010-08-05
Name	Douglas G. Gallagher	Registration Number	57783

This collection of information is required by 37 CFR 1.378(c). The information is required to obtain or retain a benefit by the public which is to file (and by the USPTO to process) an application. Confidentiality is governed by 35 U.S.C. 122 and 37 CFR 1.11 and 1.14. This collection is estimated to take 1 hour to complete, including gathering, preparing, and submitting the completed application form to the USPTO. Time will vary depending upon the individual case. Any comments on the amount of time you require to complete this form and/ or suggestions for reducing this burden, should be sent to the Chief Information Officer, U.S. Patent and Trademark Office, U.S. Department of Commerce, P.O. Box 1450, Alexandria, VA 22313-1450. DO NOT SEND FEES OR COMPLETED FORMS TO THIS ADDRESS. **This form can only be used when in conjunction with EFS-Web. If this form is mailed to the USPTO, it may cause delays in reinstating the patent.**

Privacy Act Statement

The Privacy Act of 1974 (P.L. 93-579) requires that you be given certain information in connection with your submission of the attached form related to a patent application or patent. Accordingly, pursuant to the requirements of the Act, please be advised that: (1) the general authority for the collection of this information is 35 U.S.C. 2(b)(2); (2) furnishing of the information solicited is voluntary; and (3) the principal purpose for which the information is used by the U.S. Patent and Trademark Office is to process and/or examine your submission related to a patent application or patent. If you do not furnish the requested information, the U.S. Patent and Trademark Office may not be able to process and/or examine your submission, which may result in termination of proceedings or abandonment of the application or expiration of the patent.

The information provided by you in this form will be subject to the following routine uses:

1. The information on this form will be treated confidentially to the extent allowed under the Freedom of Information Act (5 U.S.C. 552) and the Privacy Act (5 U.S.C. 552a). Records from this system of records may be disclosed to the Department of Justice to determine whether the Freedom of Information Act requires disclosure of these records.

2. A record from this system of records may be disclosed, as a routine use, in the course of presenting evidence to a court, magistrate, or administrative tribunal, including disclosures to opposing counsel in the course of settlement negotiations.

3. A record in this system of records may be disclosed, as a routine use, to a Member of Congress submitting a request involving an individual, to whom the record pertains, when the individual has requested assistance from the Member with respect to the subject matter of the record.

4. A record in this system of records may be disclosed, as a routine use, to a contractor of the Agency having need for the information in order to perform a contract. Recipients of information shall be required to comply with the requirements of the Privacy Act of 1974, as amended, pursuant to 5 U.S.C. 552a(m).

5. A record related to an International Application filed under the Patent Cooperation Treaty in this system of records may be disclosed, as a routine use, to the International Bureau of the World Intellectual Property Organization, pursuant to the Patent Cooperation Treaty.

6. A record in this system of records may be disclosed, as a routine use, to another federal agency for purposes of National Security review (35 U.S.C. 181) and for review pursuant to the Atomic Energy Act (42 U.S.C. 218(c)).

7. A record from this system of records may be disclosed, as a routine use, to the Administrator, General Services, or his/her designee, during an inspection of records conducted by GSA as part of that agency's responsibility to recommend improvements in records management practices and programs, under authority of 44 U.S.C. 2904 and 2906. Such disclosure shall be made in accordance with the GSA regulations governing inspection of records for this purpose, and any other relevant (i.e., GSA or Commerce) directive. Such disclosure shall not be used to make determinations about individuals.

8. A record from this system of records may be disclosed, as a routine use, to the public after either publication of the application pursuant to 35 U.S.C. 122(b) or issuance of a patent pursuant to 35 U.S.C. 151. Further, a record may be disclosed, subject to the limitations of 37 CFR 1.14, as a routine use, to the public if the record was filed in an application which became abandoned or in which the proceedings were terminated and which application is referenced by either a published application, an application open to public inspections or an issued patent.

9. A record from this system of records may be disclosed, as a routine use, to a Federal, State, or local law enforcement agency, if the USPTO becomes aware of a violation or potential violation of law or regulation.

UNITED STATES PATENT AND TRADEMARK OFFICE

Commissioner for Patents
United States Patent and Trademark Office
P.O. Box 1450
Alexandria, VA 22313-1450
www.uspto.gov

NORMAN E LEHRER
1205 NORTH KINGS HWY
CHERRY HILL NJ 08034

MAILED
NOV 10 2011
OFFICE OF PETITIONS

In re Patent No. 6,385,489 :
Issued: May 7, 2002 :
Application No. 09/399,080 : ON PETITION
Filed: September 17, 1999 :
Attorney Docket No. 4426-38 :

This is a decision on the petition under 37 CFR 1.378(c), filed October 20, 2011, to accept the delayed payment of a maintenance fee for the above-identified patent.

The petition is **DISMISSED**.

If reconsideration of this decision is desired, a petition for reconsideration under 37 CFR 1.378(e) must be filed within TWO (2) MONTHS from the mail date of this decision. No extension of this two-month time limit can be granted under 37 CFR 1.136(a) or (b). This is **not** a final agency action within the meaning of 5 U.S.C. § 704.

Any petition for reconsideration of this decision must be accompanied by the petition fee of $400 as set forth in 37 CFR 1.17(f). The petition for reconsideration must include the lacking item(s) noted below, since, after a decision on the petition for reconsideration, no further reconsideration or review of the matter will be undertaken by the Director.

A petition to accept the unintentionally delayed payment of a maintenance fee under 35 U.S.C. § 41(c) and 37 CFR 1.378(c) must be accompanied by: (1) a statement that the delay was unintentional; (2) payment of the appropriate maintenance fee, unless previously submitted; (3) payment of the surcharge set forth in 37 CFR 1.20(i)(2). This petition lacks all of the items listed above.

With regards to item (1), the petition must be signed by:

1) An attorney or agent of record appointed in compliance with § 1.34(b);
2) A registered attorney or agent not of record who acts in a representative capacity under the provisions of § 1.34(a);
(3) The assignee of record of the entire interest, if there is an assignee of record of the entire interest;
(4) An assignee of record of an undivided part interest, and any assignee(s) of the remaining

interest and any applicant retaining an interest, if there is an assignee of record of an undividing part interest; or
(5) All of the applicants (§§ 1.42.1.43 and 1.47) for patent, unless there is an assignee of record of the entire interest and such assignee has taken action in the application in accordance with §§ 3.71 and 3.73. (Form PTO/SB/96 enclosed)

Petitioner has submitted a petition under 37 CFR 1.378(c), however, the petition as signed cannot be accepted since Ian Rankin is not authorized to sign the instant petition. Further, petitioner has not established that the person who signed the petition form is authorized to sign on behalf of the patentee(s), assignee, or other party of interest. Consequently, the petition under 37 CFR 1.378(c), cannot be accepted at this time. A renewed petition with the proper signature as listed above is required.

Further, if the instant petition is on the behalf of the assignee, the petition does not comply with 37 CFR 3.73(b). 37 CFR 3.73(b) provides that: (1) when an assignee seeks to take action in a matter before the Office, the assignee must establish its ownership of the property to the satisfaction of the Commissioner; (2) ownership is established by submitting to the Office, in the Office file related to the matter in which action is sought to be taken, documentary evidence of a chain of title from the original owner to the assignee (e.g., copy of an executed assignment submitted for recording) or by specifying (e.g., reel and frame number) where such evidence is recorded in the Office; (3) the submission establishing ownership must be signed by a party authorized to act on behalf of the assignee; and (4) documents submitted to establish ownership may be required to be recorded as a condition to permitting the assignee to take action in a matter pending before the Office. A 37 CFR 3.73(b) statement is enclosed.

Currently, there is no Statement under 37 CFR 3.73(b) of record in the above-identified patent.

With regards to items (2) and (3), petitioner has failed to submit the required $1,425.00 small entity seven and a half year maintenance fee and required $1,640.00 surcharge fee due to an invalid deposit account number given on the petition. Therefore, as stated above a $400.00 petition fee is also required for any petition for reconsideration, bring the total to $3,465.00.

A courtesy copy of this decision is being mailed to the address on the petition; however, all future correspondence will be mailed solely to the address of record.

If this petition is not renewed or if renewed and not granted, then petitioner may request a refund of the maintenance and surcharge fees paid. The fee for requesting reconsideration is not refundable.

Further correspondence with respect to this matter should be addressed as follows:

By Mail: Mail Stop PETITIONS
Commissioner for Patents
Post Office Box 1450
Alexandria, VA 22313-1450

By hand: U.S. Patent and Trademark Office
Customer Service Window, Mail Stop Petitions
Randolph Building
401 Dulany Street
Alexandria, VA 22314

The centralized facsimile number is (571) 273-8300.

Telephone inquiries should be directed to the undersigned at (571)-272-7751.

This patent file is being returned to the Files Repository.

/Joan Olszewski/
Joan Olszewski
Petitions Examiner
Office of Petitions

Enclosure: form PTO/SB/96

cc: Ian Rankin
3 Bailey Court
Green Street
Macclesfield, United Kingdom, SK10 1JQ

PTO/SB/96 (07-09)
Approved for use through 07/31/2012. OMB 0651-0031
U.S. Patent and Trademark Office; U.S. DEPARTMENT OF COMMERCE
Under the Paperwork Reduction Act of 1995, no persons are required to respond to a collection of information unless it displays a valid OMB control number.

STATEMENT UNDER 37 CFR 3.73(b)

Applicant/Patent Owner: _____

Application No./Patent No.: _____ Filed/Issue Date: _____

Titled:

_____, a _____
(Name of Assignee) (Type of Assignee, e.g., corporation, partnership, university, government agency, etc.

states that it is:

1. ☐ the assignee of the entire right, title, and interest in;

2. ☐ an assignee of less than the entire right, title, and interest in
(The extent (by percentage) of its ownership interest is _____ %); or

3. ☐ the assignee of an undivided interest in the entirety of (a complete assignment from one of the joint inventors was made)

the patent application/patent identified above, by virtue of either:

A. ☐ An assignment from the inventor(s) of the patent application/patent identified above. The assignment was recorded in the United States Patent and Trademark Office at Reel _____, Frame _____, or for which a copy therefore is attached.

OR

B. ☐ A chain of title from the inventor(s), of the patent application/patent identified above, to the current assignee as follows:

1. From: _____ To: _____

The document was recorded in the United States Patent and Trademark Office at
Reel _____, Frame _____, or for which a copy thereof is attached.

2. From: _____ To: _____

The document was recorded in the United States Patent and Trademark Office at
Reel _____, Frame _____, or for which a copy thereof is attached.

3. From: _____ To: _____

The document was recorded in the United States Patent and Trademark Office at
Reel _____, Frame _____, or for which a copy thereof is attached.

☐ Additional documents in the chain of title are listed on a supplemental sheet(s).

☐ As required by 37 CFR 3.73(b)(1)(i), the documentary evidence of the chain of title from the original owner to the assignee was, or concurrently is being, submitted for recordation pursuant to 37 CFR 3.11.

[NOTE: A separate copy (*i.e.*, a true copy of the original assignment document(s)) must be submitted to Assignment Division in accordance with 37 CFR Part 3, to record the assignment in the records of the USPTO. See MPEP 302.08]

The undersigned (whose title is supplied below) is authorized to act on behalf of the assignee.

_____ _____
Signature Date

_____ _____
Printed or Typed Name Title

This collection of information is required by 37 CFR 3.73(b). The information is required to obtain or retain a benefit by the public which is to file (and by the USPTO to process) an application. Confidentiality is governed by 35 U.S.C. 122 and 37 CFR 1.11 and 1.14. This collection is estimated to take 12 minutes to complete, including gathering, preparing, and submitting the completed application form to the USPTO. Time will vary depending upon the individual case. Any comments on the amount of time you require to complete this form and/or suggestions for reducing this burden, should be sent to the Chief Information Officer, U.S. Patent and Trademark Office, U.S. Department of Commerce, P.O. Box 1450, Alexandria, VA 22313-1450. DO NOT SEND FEES OR COMPLETED FORMS TO THIS ADDRESS. **SEND TO: Commissioner for Patents, P.O. Box 1450, Alexandria, VA 22313-1450.**

If you need assistance in completing the form, call 1-800-PTO-9199 and select option 2.

Privacy Act Statement

The **Privacy Act of 1974 (P.L. 93-579)** requires that you be given certain information in connection with your submission of the attached form related to a patent application or patent. Accordingly, pursuant to the requirements of the Act, please be advised that: (1) the general authority for the collection of this information is 35 U.S.C. 2(b)(2); (2) furnishing of the information solicited is voluntary; and (3) the principal purpose for which the information is used by the U.S. Patent and Trademark Office is to process and/or examine your submission related to a patent application or patent. If you do not furnish the requested information, the U.S. Patent and Trademark Office may not be able to process and/or examine your submission, which may result in termination of proceedings or abandonment of the application or expiration of the patent.

The information provided by you in this form will be subject to the following routine uses:

1. The information on this form will be treated confidentially to the extent allowed under the Freedom of Information Act (5 U.S.C. 552) and the Privacy Act (5 U.S.C 552a). Records from this system of records may be disclosed to the Department of Justice to determine whether disclosure of these records is required by the Freedom of Information Act.
2. A record from this system of records may be disclosed, as a routine use, in the course of presenting evidence to a court, magistrate, or administrative tribunal, including disclosures to opposing counsel in the course of settlement negotiations.
3. A record in this system of records may be disclosed, as a routine use, to a Member of Congress submitting a request involving an individual, to whom the record pertains, when the individual has requested assistance from the Member with respect to the subject matter of the record.
4. A record in this system of records may be disclosed, as a routine use, to a contractor of the Agency having need for the information in order to perform a contract. Recipients of information shall be required to comply with the requirements of the Privacy Act of 1974, as amended, pursuant to 5 U.S.C. 552a(m).
5. A record related to an International Application filed under the Patent Cooperation Treaty in this system of records may be disclosed, as a routine use, to the International Bureau of the World Intellectual Property Organization, pursuant to the Patent Cooperation Treaty.
6. A record in this system of records may be disclosed, as a routine use, to another federal agency for purposes of National Security review (35 U.S.C. 181) and for review pursuant to the Atomic Energy Act (42 U.S.C. 218(c)).
7. A record from this system of records may be disclosed, as a routine use, to the Administrator, General Services, or his/her designee, during an inspection of records conducted by GSA as part of that agency's responsibility to recommend improvements in records management practices and programs, under authority of 44 U.S.C. 2904 and 2906. Such disclosure shall be made in accordance with the GSA regulations governing inspection of records for this purpose, and any other relevant (*i.e.*, GSA or Commerce) directive. Such disclosure shall not be used to make determinations about individuals.
8. A record from this system of records may be disclosed, as a routine use, to the public after either publication of the application pursuant to 35 U.S.C. 122(b) or issuance of a patent pursuant to 35 U.S.C. 151. Further, a record may be disclosed, subject to the limitations of 37 CFR 1.14, as a routine use, to the public if the record was filed in an application which became abandoned or in which the proceedings were terminated and which application is referenced by either a published application, an application open to public inspection or an issued patent.
9. A record from this system of records may be disclosed, as a routine use, to a Federal, State, or local law enforcement agency, if the USPTO becomes aware of a violation or potential violation of law or regulation.

UNITED STATES PATENT AND TRADEMARK OFFICE

Commissioner for Patents
United States Patent and Trademark Office
P.O. Box 1450
Alexandria, VA 22313-1450
www.uspto.gov

In re Patent No. 6385489
Issue Date: May 7,2002
Application No. 09399080
Filed: September 17,1999
Attorney Docket No. 4426-38

:
:DECISION GRANTING PETITION
:UNDER 37 CFR 1.378(c)
:

This is a decision on the electronic petition, filed November 17,2011 ,under 37 CFR 1.378(c) to accept the unintentionally delayed payment of the 7.5 year maintenance fee for the above-identified patent.

The petition is **GRANTED**.

The maintenance fee is accepted, and the above-identified patent reinstated as of November 17,2011 . This decision also constitutes notice that the fee has been accepted. An electronic copy of the petition and this decision has been created as an entry in the Image File Wrapper. Nevertheless, petitioner should print and retain an independent copy.

Telephone inquiries related to this electronic decision should be directed to the Electronic Business Center at 1-866-217-9197.

PTO/SB/66 (03-09)
Approved for use through 03/31/2012. OMB 0651-0016
U.S. Patent and Trademark Office: U.S. DEPARTMENT OF COMMERCE
Under the Paperwork Reduction Act of 1995, no persons are required to respond to a collection of information unless it displays valid OMB control number.

PETITION TO ACCEPT UNINTENTIONALLY DELAYED PAYMENT OF MAINTENANCE FEE IN AN EXPIRED PATENT (37 CFR 1.378(c))

Patent Number	Issue Date (YYYY-MM-DD)	Application Number	Filing Date (YYYY-MM-DD)	Docket Number (if applicable)
6385489	2002-05-07	09399080	1999-09-17	137703.00103

CAUTION: Maintenance fee (and surcharge, if any) payment must correctly identify: (1) the patent number and (2) the application number of the actual U.S. application leading to issuance of that patent to ensure the fee(s) is/are associated with the correct patent. 37 CFR 1.366(c) and (d).

SMALL ENTITY

☒ Patentee claims, or has previously claimed, small entity status. See 37 CFR 1.27.

LOSS OF ENTITLEMENT TO SMALL ENTITY STATUS

☐ Patentee is no longer entitled to small entity status. See 37 CFR 1.27(g)

NOT Small Entity	Fee	Code	Small Entity	Fee	Code
○	3 ½ year	(1551)	○	3 ½ year	(2551)
○	7 ½ year	(1552)	◉	7 ½ year	(2552)
○	11 ½ year	(1553)	○	11 ½ year	(2553)

SURCHARGE

The surcharge required by 37 CFR 1.20(i)(2) (Fee Code 1558) must be paid as a condition of accepting unintentionally delayed payment of the maintenance fee.

MAINTENANCE FEE (37 CFR 1.20(e)-(g))

The appropriate maintenance fee must be submitted with this petition.

STATEMENT

THE UNDERSIGNED CERTIFIES THAT THE DELAY IN PAYMENT OF THE MAINTENANCE FEE TO THIS PATENT WAS UNINTENTIONAL

PETITIONER(S) REQUEST THAT THE DELAYED PAYMENT OF THE MAINTENANCE FEE BE ACCEPTED AND THE PATENT REINSTATED

THIS PORTION MUST BE COMPLETED BY THE SIGNATORY OR SIGNATORIES

37 CFR 1.378(d) states: "Any petition under this section must be signed by an attorney or agent registered to practice before the Patent and Trademark Office, or by the patentee, the assignee, or other party in interest."

I certify, in accordance with 37 CFR 1.4(d)(4) that I am

◉ An attorney or agent registered to practice before the Patent and Trademark Office

○ A sole patentee

○ A joint patentee; I certify that I am authorized to sign this submission on behalf of all the other patentees.

○ A joint patentee; all of whom are signing this e-petition

○ The assignee of record of the entire interest

PTO/SB/66 (03-09)
Approved for use through 03/31/2012. OMB 0651-0016
U.S. Patent and Trademark Office: U.S. DEPARTMENT OF COMMERCE
Under the Paperwork Reduction Act of 1995, no persons are required to respond to a collection of information unless it displays valid OMB control number.

Patent Practitioner			
A signature of the applicant or representative is required in accordance with 37 CFR 1.33 and 10.18. Please see 37 CFR 1.4(d) for the form of the signature			
Signature	/Michael C. Greenbaum/	Date (YYYY-MM-DD)	2011-11-17
Name	Michael C. Greenbaum	Registration Number	28419

This collection of information is required by 37 CFR 1.378(c). The information is required to obtain or retain a benefit by the public which is to file (and by the USPTO to process) an application. Confidentiality is governed by 35 U.S.C. 122 and 37 CFR 1.11 and 1.14. This collection is estimated to take 1 hour to complete, including gathering, preparing, and submitting the completed application form to the USPTO. Time will vary depending upon the individual case. Any comments on the amount of time you require to complete this form and/ or suggestions for reducing this burden, should be sent to the Chief Information Officer, U.S. Patent and Trademark Office, U.S. Department of Commerce, P.O. Box 1450, Alexandria, VA 22313-1450. DO NOT SEND FEES OR COMPLETED FORMS TO THIS ADDRESS. **This form can only be used when in conjunction with EFS-Web. If this form is mailed to the USPTO, it may cause delays in reinstating the patent.**

Privacy Act Statement

The Privacy Act of 1974 (P.L. 93-579) requires that you be given certain information in connection with your submission of the attached form related to a patent application or patent. Accordingly, pursuant to the requirements of the Act, please be advised that: (1) the general authority for the collection of this information is 35 U.S.C. 2(b)(2); (2) furnishing of the information solicited is voluntary; and (3) the principal purpose for which the information is used by the U.S. Patent and Trademark Office is to process and/or examine your submission related to a patent application or patent. If you do not furnish the requested information, the U.S. Patent and Trademark Office may not be able to process and/or examine your submission, which may result in termination of proceedings or abandonment of the application or expiration of the patent.

The information provided by you in this form will be subject to the following routine uses:

1. The information on this form will be treated confidentially to the extent allowed under the Freedom of Information Act (5 U.S.C. 552) and the Privacy Act (5 U.S.C. 552a). Records from this system of records may be disclosed to the Department of Justice to determine whether the Freedom of Information Act requires disclosure of these records.

2. A record from this system of records may be disclosed, as a routine use, in the course of presenting evidence to a court, magistrate, or administrative tribunal, including disclosures to opposing counsel in the course of settlement negotiations.

3. A record in this system of records may be disclosed, as a routine use, to a Member of Congress submitting a request involving an individual, to whom the record pertains, when the individual has requested assistance from the Member with respect to the subject matter of the record.

4. A record in this system of records may be disclosed, as a routine use, to a contractor of the Agency having need for the information in order to perform a contract. Recipients of information shall be required to comply with the requirements of the Privacy Act of 1974, as amended, pursuant to 5 U.S.C. 552a(m).

5. A record related to an International Application filed under the Patent Cooperation Treaty in this system of records may be disclosed, as a routine use, to the International Bureau of the World Intellectual Property Organization, pursuant to the Patent Cooperation Treaty.

6. A record in this system of records may be disclosed, as a routine use, to another federal agency for purposes of National Security review (35 U.S.C. 181) and for review pursuant to the Atomic Energy Act (42 U.S.C. 218(c)).

7. A record from this system of records may be disclosed, as a routine use, to the Administrator, General Services, or his/her designee, during an inspection of records conducted by GSA as part of that agency's responsibility to recommend improvements in records management practices and programs, under authority of 44 U.S.C. 2904 and 2906. Such disclosure shall be made in accordance with the GSA regulations governing inspection of records for this purpose, and any other relevant (i.e., GSA or Commerce) directive. Such disclosure shall not be used to make determinations about individuals.

8. A record from this system of records may be disclosed, as a routine use, to the public after either publication of the application pursuant to 35 U.S.C. 122(b) or issuance of a patent pursuant to 35 U.S.C. 151. Further, a record may be disclosed, subject to the limitations of 37 CFR 1.14, as a routine use, to the public if the record was filed in an application which became abandoned or in which the proceedings were terminated and which application is referenced by either a published application, an application open to public inspections or an issued patent.

9. A record from this system of records may be disclosed, as a routine use, to a Federal, State, or local law enforcement agency, if the USPTO becomes aware of a violation or potential violation of law or regulation.

UNITED STATES PATENT AND TRADEMARK OFFICE

Commissioner for Patents
United States Patent and Trademark Office
P.O. Box 1450
Alexandria, VA 22313-1450
www.uspto.go

MAILED

APR 09 2012

OFFICE OF PETITIONS

NORMAN E. LEHRER
1205 NORTH KINGS HWY.
CHERRY HILL, NJ 08034

In re Patent No. 6,385,489
Issue Date: May 7, 2002
Application No. 09/399,080
Filed: September 17, 1999
For: TRIPLE ARRAY DEFIBRILLATION CATHETER AND METHOD OF USING THE SAME

ON PETITION

This is a decision on the "PETITION FOR RECONSIDERATION UNDER 37 CFR 1.378(e)," filed March 22, 2012, and Supplemental to the petition filed November 17, 2012, to accept the unintentionally delayed payment of a maintenance fee for the above-identified patent.

The petition is **GRANTED**.

The maintenance fee is hereby accepted and the above-identified patent is reinstated as of the mail date of this decision.

Telephone inquiries concerning this decision should be directed to the undersigned at (571) 272-3208.

/KOC/
Karen Creasy
Petitions Examiner
Office of Petitions

UNITED STATES PATENT AND TRADEMARK OFFICE

Commissioner for Patents
United States Patent and Trademark Office
P.O. Box 1450
Alexandria, VA 22313-1450
www.uspto.gov

FERNANDO ANZELLINI
CALLE 83 NO 19 36 OF 704
BOGOTA CO COLOMBIA

MAILED

OCT 27 2011

OFFICE OF PETITIONS

In re Patent No. 6,339,720
Issue Date: January 15, 2002
Application No. 09/399,320
Filed: September 20, 1999
Title of Invention: EARLY WARNING APPARATUS FOR ACUTE MYOCARDIAL INFARCTION IN THE FIRST SIX HOURS OF PAIN

ON PETITION

This is a decision on the petition filed October 12, 2011 under 37 CFR 1.378(b), to accept the delayed payment of the maintenance fee for the above-identified patent.

The petition under 37 CFR 1.378(b) is **DISMISSED**.

If reconsideration of this decision is desired, a petition for reconsideration under 37 CFR 1.378(e) must be filed within TWO (2) MONTHS from the mail date of this decision. No extension of this 2-month time limit can be granted under 37 CFR 1.136(a) or (b). The petition for reconsideration should include an exhaustive attempt to provide the lacking item(s) noted below, since, after a decision on the petition for reconsideration, no further reconsideration or review of the matter will be undertaken by the Commissioner.

The patent issued on January 15, 2002. The second maintenance fee due could have been paid during the period from January 15, 2009 to July 15, 2009 or, with a surcharge during the period from July 16, 2009 to January 15, 2010. Accordingly, this patent expired on January 15, 2010, for failure to timely remit the second maintenance fee.

A petition to accept the delayed maintenance fee under 35 U.S.C. § 41(c) and 37 CFR 1.378(b) must be accompanied by (1) an adequate showing that the delay was unavoidable, since reasonable care was taken to ensure that the maintenance fee would be paid timely and that the petition was filed promptly after the patentee was notified of, or otherwise became aware of, the expiration of the patent, (2) payment of the appropriate maintenance fee, unless previously submitted, and (3) payment of the surcharge set forth in 37 CFR 1.20(l)(1).
Although petitioner has paid the surcharge in the amount of $700, petitioner has not submitted

payment or authorization to charge a deposit account for the second scheduled maintenance fees due at 7.5 years from the date of issuance. As such, the merits of this petition will not be discussed.

At this writing, the maintenance fee due is set at $1425 for a small entity and $2850 for a large entity, however prior to paying the fees, petitioner should verify the correct fees and to ensure that fee increases haven't occurred in the interim.

This patent expired January 15, 2010 and will remain in that status until such time as the appropriate maintenance fees have been submitted and a grantable petition has been submitted.

Further correspondence with respect to this matter should be addressed as follows:

By mail: Mail Stop Petitions
Commissioner for Patents
P.O. Box 1450
Alexandria VA 22313-1450

By FAX: (571) 273-8300
ATTN: Office of Petitions

Telephone inquiries concerning this matter may be directed to the undersigned Petitions Attorney at (571) 272-3212.

Patricia Faison-Ball

Patricia Faison-Ball
Senior Petitions Attorney
Office of Petitions

UNITED STATES PATENT AND TRADEMARK OFFICE

Commissioner for Patents
United States Patent and Trademark Office
P.O. Box 1450
Alexandria, VA 22313-1450
www.uspto.gov

In re Patent No. 6283413
Issue Date: September 4,2001
Application No. 09399553
Filed: September 20,1999
Attorney Docket No. 5116/53573

:
:DECISION GRANTING PETITION
:UNDER 37 CFR 1.378(c)
:

This is a decision on the electronic petition, filed September 2,2011 ,under 37 CFR 1.378(c) to accept the unintentionally delayed payment of the 7.5 year maintenance fee for the above-identified patent.

The petition is **GRANTED**.

The maintenance fee is accepted, and the above-identified patent reinstated as of September 2,2011 . This decision also constitutes notice that the fee has been accepted. An electronic copy of the petition and this decision has been created as an entry in the Image File Wrapper. Nevertheless, petitioner should print and retain an independent copy.

Telephone inquiries related to this electronic decision should be directed to the Electronic Business Center at 1-866-217-9197.

PTO/SB/66 (03-09)
Approved for use through 03/31/2012. OMB 0651-0016
U.S. Patent and Trademark Office: U.S. DEPARTMENT OF COMMERCE
Under the Paperwork Reduction Act of 1995, no persons are required to respond to a collection of information unless it displays valid OMB control number.

PETITION TO ACCEPT UNINTENTIONALLY DELAYED PAYMENT OF MAINTENANCE FEE IN AN EXPIRED PATENT (37 CFR 1.378(c))

Patent Number	Issue Date (YYYY-MM-DD)	Application Number	Filing Date (YYYY-MM-DD)	Docket Number (if applicable)
6283413	2001-09-04	09399553	1999-09-20	5116/53573

CAUTION: Maintenance fee (and surcharge, if any) payment must correctly identify: (1) the patent number and (2) the application number of the actual U.S. application leading to issuance of that patent to ensure the fee(s) is/are associated with the correct patent. 37 CFR 1.366(c) and (d).

SMALL ENTITY

☒ Patentee claims, or has previously claimed, small entity status. See 37 CFR 1.27.

LOSS OF ENTITLEMENT TO SMALL ENTITY STATUS

☐ Patentee is no longer entitled to small entity status. See 37 CFR 1.27(g)

NOT Small Entity	Fee	Code	Small Entity	Fee	Code
○	3 ½ year	(1551)	○	3 ½ year	(2551)
○	7 ½ year	(1552)	◉	7 ½ year	(2552)
○	11 ½ year	(1553)	○	11 ½ year	(2553)

SURCHARGE

The surcharge required by 37 CFR 1.20(i)(2) (Fee Code 1558) must be paid as a condition of accepting unintentionally delayed payment of the maintenance fee.

MAINTENANCE FEE (37 CFR 1.20(e)-(g))

The appropriate maintenance fee must be submitted with this petition.

STATEMENT

THE UNDERSIGNED CERTIFIES THAT THE DELAY IN PAYMENT OF THE MAINTENANCE FEE TO THIS PATENT WAS UNINTENTIONAL

PETITIONER(S) REQUEST THAT THE DELAYED PAYMENT OF THE MAINTENANCE FEE BE ACCEPTED AND THE PATENT REINSTATED

THIS PORTION MUST BE COMPLETED BY THE SIGNATORY OR SIGNATORIES

37 CFR 1.378(d) states: "Any petition under this section must be signed by an attorney or agent registered to practice before the Patent and Trademark Office, or by the patentee, the assignee, or other party in interest."

I certify, in accordance with 37 CFR 1.4(d)(4) that I am

◉ An attorney or agent registered to practice before the Patent and Trademark Office

○ A sole patentee

○ A joint patentee; I certify that I am authorized to sign this submission on behalf of all the other patentees.

○ A joint patentee; all of whom are signing this e-petition

○ The assignee of record of the entire interest

PTO/SB/66 (03-09)
Approved for use through 03/31/2012. OMB 0651-0016
U.S. Patent and Trademark Office: U.S. DEPARTMENT OF COMMERCE
Under the Paperwork Reduction Act of 1995, no persons are required to respond to a collection of information unless it displays valid OMB control number.

Patent Practitioner			
A signature of the applicant or representative is required in accordance with 37 CFR 1.33 and 10.18. Please see 37 CFR 1.4(d) for the form of the signature			
Signature	/Charles T. Riggs Jr./	Date (YYYY-MM-DD)	2001-09-02
Name	Charles T. Riggs Jr.	Registration Number	37430

This collection of information is required by 37 CFR 1.378(c). The information is required to obtain or retain a benefit by the public which is to file (and by the USPTO to process) an application. Confidentiality is governed by 35 U.S.C. 122 and 37 CFR 1.11 and 1.14. This collection is estimated to take 1 hour to complete, including gathering, preparing, and submitting the completed application form to the USPTO. Time will vary depending upon the individual case. Any comments on the amount of time you require to complete this form and/ or suggestions for reducing this burden, should be sent to the Chief Information Officer, U.S. Patent and Trademark Office, U.S. Department of Commerce, P.O. Box 1450, Alexandria, VA 22313-1450. DO NOT SEND FEES OR COMPLETED FORMS TO THIS ADDRESS. **This form can only be used when in conjunction with EFS-Web. If this form is mailed to the USPTO, it may cause delays in reinstating the patent.**

Privacy Act Statement

The Privacy Act of 1974 (P.L. 93-579) requires that you be given certain information in connection with your submission of the attached form related to a patent application or patent. Accordingly, pursuant to the requirements of the Act, please be advised that: (1) the general authority for the collection of this information is 35 U.S.C. 2(b)(2); (2) furnishing of the information solicited is voluntary; and (3) the principal purpose for which the information is used by the U.S. Patent and Trademark Office is to process and/or examine your submission related to a patent application or patent. If you do not furnish the requested information, the U.S. Patent and Trademark Office may not be able to process and/or examine your submission, which may result in termination of proceedings or abandonment of the application or expiration of the patent.

The information provided by you in this form will be subject to the following routine uses:

1. The information on this form will be treated confidentially to the extent allowed under the Freedom of Information Act (5 U.S.C. 552) and the Privacy Act (5 U.S.C. 552a). Records from this system of records may be disclosed to the Department of Justice to determine whether the Freedom of Information Act requires disclosure of these records.

2. A record from this system of records may be disclosed, as a routine use, in the course of presenting evidence to a court, magistrate, or administrative tribunal, including disclosures to opposing counsel in the course of settlement negotiations.

3. A record in this system of records may be disclosed, as a routine use, to a Member of Congress submitting a request involving an individual, to whom the record pertains, when the individual has requested assistance from the Member with respect to the subject matter of the record.

4. A record in this system of records may be disclosed, as a routine use, to a contractor of the Agency having need for the information in order to perform a contract. Recipients of information shall be required to comply with the requirements of the Privacy Act of 1974, as amended, pursuant to 5 U.S.C. 552a(m).

5. A record related to an International Application filed under the Patent Cooperation Treaty in this system of records may be disclosed, as a routine use, to the International Bureau of the World Intellectual Property Organization, pursuant to the Patent Cooperation Treaty.

6. A record in this system of records may be disclosed, as a routine use, to another federal agency for purposes of National Security review (35 U.S.C. 181) and for review pursuant to the Atomic Energy Act (42 U.S.C. 218(c)).

7. A record from this system of records may be disclosed, as a routine use, to the Administrator, General Services, or his/her designee, during an inspection of records conducted by GSA as part of that agency's responsibility to recommend improvements in records management practices and programs, under authority of 44 U.S.C. 2904 and 2906. Such disclosure shall be made in accordance with the GSA regulations governing inspection of records for this purpose, and any other relevant (i.e., GSA or Commerce) directive. Such disclosure shall not be used to make determinations about individuals.

8. A record from this system of records may be disclosed, as a routine use, to the public after either publication of the application pursuant to 35 U.S.C. 122(b) or issuance of a patent pursuant to 35 U.S.C. 151. Further, a record may be disclosed, subject to the limitations of 37 CFR 1.14, as a routine use, to the public if the record was filed in an application which became abandoned or in which the proceedings were terminated and which application is referenced by either a published application, an application open to public inspections or an issued patent.

9. A record from this system of records may be disclosed, as a routine use, to a Federal, State, or local law enforcement agency, if the USPTO becomes aware of a violation or potential violation of law or regulation.

UNITED STATES PATENT AND TRADEMARK OFFICE

Commissioner for Patents
United States Patent and Trademark Office
P.O. Box 1450
Alexandria, VA 22313-1450
www.uspto.gov

DONALD G. RICHARDSON
503 ORENA STREET
SANTA BARBARA CA 93103

MAILED
JUL 28 2011
OFFICE OF PETITIONS

In re Patent No. 6,253,889 :
Issue Date: 07/03/2001 :
Application Number: 09/400,213 : ON PETITION
Filing Date: 09/21/1999 :
For: ACCELERATION SENSITIVE :
SHOCK ABSORBER :

This is a decision on the petition under 37 CFR 1.378(c), filed on June 10, 2011,[1] to accept the unintentionally delayed payment of a maintenance fee for the above-identified patent.

The petition is **GRANTED**.

This patent expired on July 3, 2009, for failure to timely pay the second maintenance fee. Since this petition was submitted within twenty-four months after the six-month grace period provided in 37 CFR 1.362(e), the petition was timely filed under the provisions of 37 CFR 1.378(c).

The maintenance fee is hereby accepted and the above-identified patent is reinstated as of the mail date of this decision.

The statement of unintentional delay was not signed by a person who would have been in a position of knowing that the delay in paying the maintenance fee was unintentional. Nevertheless, in accordance with 37 CFR 10.18, the statement is accepted as constituting a certification of unintentional delay. However, in the event that petitioner has no knowledge that the delay was in fact unintentional, petitioner should make a reasonable inquiry to ascertain that, in fact, the delay was unintentional. If petitioner discovers that the delay was intentional, petitioner must so notify the Office.

[1] On June 10, 2011, a petition paper was filed, signed by "Theodore G. Phelps, Receiver." On July 6, 2011 (certificate of mailing July 1, 2011), a petition signed by registered patent practitioner Chad W. Miller, Reg. No. 44,943, was filed.

Receipt of the fee payment on June 10, 2011, is acknowledged. It is noted that an additional payment was made on July 1, 2011 (certificate of mailing date). The subsequent payment is a duplicate and will be refunded to counsel's deposit account.

The address in the petition is different than the correspondence address. A courtesy copy of this decision is being mailed to the address in the petition. All future correspondence, however, will be mailed solely to the address of record. A change of correspondence address must be filed if the correspondence address needs to be changed. If petitioner desires to receive any Maintenance Fee correspondence which **may** be mailed, a "Fee Address" Indication forms should be filed.

Telephone inquiries related to this decision should be directed to the undersigned at (571) 272-3231.

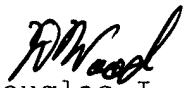

Douglas I. Wood
Senior Petitions Attorney
Office of Petitions

Cc: CHAD W. MILLER
WEIDE & MILLER, LTD.
7251 W. LAKE MEAD BLVD, STE 350
LAS VEGAS NV 89128

UNITED STATES PATENT AND TRADEMARK OFFICE

Commissioner for Patents
United States Patent and Trademark Office
P.O. Box 1450
Alexandria, VA 22313-1450
www.uspto.gov

In re Patent No. 6363335
Issue Date: March 26,2002
Application No. 09400623
Filed: September 20,1999
Attorney Docket No. 243/151

:
:DECISION GRANTING PETITION
:UNDER 37 CFR 1.378(c)
:

This is a decision on the electronic petition, filed October 18,2010 ,under 37 CFR 1.378(c) to accept the unintentionally delayed payment of the 7.5 year maintenance fee for the above-identified patent.

The petition is **GRANTED**.

The maintenance fee is accepted, and the above-identified patent reinstated as of October 18,2010 . This decision also constitutes notice that the fee has been accepted. An electronic copy of the petition and this decision has been created as an entry in the Image File Wrapper. Nevertheless, petitioner should print and retain an independent copy.

Telephone inquiries related to this electronic decision should be directed to the Electronic Business Center at 1-866-217-9197.

PTO/SB/66 (03-09)
Approved for use through 03/31/2012. OMB 0651-0016
U.S. Patent and Trademark Office: U.S. DEPARTMENT OF COMMERCE
Under the Paperwork Reduction Act of 1995, no persons are required to respond to a collection of information unless it displays valid OMB control number.

PETITION TO ACCEPT UNINTENTIONALLY DELAYED PAYMENT OF MAINTENANCE FEE IN AN EXPIRED PATENT (37 CFR 1.378(c))

Patent Number	Issue Date (YYYY-MM-DD)	Application Number	Filing Date (YYYY-MM-DD)	Docket Number (if applicable)
6363335	2002-03-26	09400623	1999-09-20	243/151

CAUTION: Maintenance fee (and surcharge, if any) payment must correctly identify: (1) the patent number and (2) the application number of the actual U.S. application leading to issuance of that patent to ensure the fee(s) is/are associated with the correct patent. 37 CFR 1.366(c) and (d).

SMALL ENTITY

☐ Patentee claims, or has previously claimed, small entity status. See 37 CFR 1.27.

LOSS OF ENTITLEMENT TO SMALL ENTITY STATUS

☐ Patentee is no longer entitled to small entity status. See 37 CFR 1.27(g)

NOT Small Entity

	Fee	Code
○	3 ½ year	(1551)
◉	7 ½ year	(1552)
○	11 ½ year	(1553)

Small Entity

	Fee	Code
○	3 ½ year	(2551)
○	7 ½ year	(2552)
○	11 ½ year	(2553)

SURCHARGE

The surcharge required by 37 CFR 1.20(i)(2) (Fee Code 1558) must be paid as a condition of accepting unintentionally delayed payment of the maintenance fee.

MAINTENANCE FEE (37 CFR 1.20(e)-(g))

The appropriate maintenance fee must be submitted with this petition.

STATEMENT

THE UNDERSIGNED CERTIFIES THAT THE DELAY IN PAYMENT OF THE MAINTENANCE FEE TO THIS PATENT WAS UNINTENTIONAL

PETITIONER(S) REQUEST THAT THE DELAYED PAYMENT OF THE MAINTENANCE FEE BE ACCEPTED AND THE PATENT REINSTATED

THIS PORTION MUST BE COMPLETED BY THE SIGNATORY OR SIGNATORIES

37 CFR 1.378(d) states: "Any petition under this section must be signed by an attorney or agent registered to practice before the Patent and Trademark Office, or by the patentee, the assignee, or other party in interest."

I certify, in accordance with 37 CFR 1.4(d)(4) that I am

◉ An attorney or agent registered to practice before the Patent and Trademark Office

○ A sole patentee

○ A joint patentee; I certify that I am authorized to sign this submission on behalf of all the other patentees.

○ A joint patentee; all of whom are signing this e-petition

○ The assignee of record of the entire interest

PTO/SB/66 (03-09)
Approved for use through 03/31/2012. OMB 0651-0016
U.S. Patent and Trademark Office: U.S. DEPARTMENT OF COMMERCE
Under the Paperwork Reduction Act of 1995, no persons are required to respond to a collection of information unless it displays valid OMB control number.

Patent Practitioner			
A signature of the applicant or representative is required in accordance with 37 CFR 1.33 and 10.18. Please see 37 CFR 1.4(d) for the form of the signature			
Signature	/Kendal M. Sheets/	Date (YYYY-MM-DD)	2010-10-15
Name	Kendal M. Sheets	Registration Number	47077

This collection of information is required by 37 CFR 1.378(c). The information is required to obtain or retain a benefit by the public which is to file (and by the USPTO to process) an application. Confidentiality is governed by 35 U.S.C. 122 and 37 CFR 1.11 and 1.14. This collection is estimated to take 1 hour to complete, including gathering, preparing, and submitting the completed application form to the USPTO. Time will vary depending upon the individual case. Any comments on the amount of time you require to complete this form and/ or suggestions for reducing this burden, should be sent to the Chief Information Officer, U.S. Patent and Trademark Office, U.S. Department of Commerce, P.O. Box 1450, Alexandria, VA 22313-1450. DO NOT SEND FEES OR COMPLETED FORMS TO THIS ADDRESS. **This form can only be used when in conjunction with EFS-Web. If this form is mailed to the USPTO, it may cause delays in reinstating the patent.**

Privacy Act Statement

The Privacy Act of 1974 (P.L. 93-579) requires that you be given certain information in connection with your submission of the attached form related to a patent application or patent. Accordingly, pursuant to the requirements of the Act, please be advised that: (1) the general authority for the collection of this information is 35 U.S.C. 2(b)(2); (2) furnishing of the information solicited is voluntary; and (3) the principal purpose for which the information is used by the U.S. Patent and Trademark Office is to process and/or examine your submission related to a patent application or patent. If you do not furnish the requested information, the U.S. Patent and Trademark Office may not be able to process and/or examine your submission, which may result in termination of proceedings or abandonment of the application or expiration of the patent.

The information provided by you in this form will be subject to the following routine uses:

1. The information on this form will be treated confidentially to the extent allowed under the Freedom of Information Act (5 U.S.C. 552) and the Privacy Act (5 U.S.C. 552a). Records from this system of records may be disclosed to the Department of Justice to determine whether the Freedom of Information Act requires disclosure of these records.

2. A record from this system of records may be disclosed, as a routine use, in the course of presenting evidence to a court, magistrate, or administrative tribunal, including disclosures to opposing counsel in the course of settlement negotiations.

3. A record in this system of records may be disclosed, as a routine use, to a Member of Congress submitting a request involving an individual, to whom the record pertains, when the individual has requested assistance from the Member with respect to the subject matter of the record.

4. A record in this system of records may be disclosed, as a routine use, to a contractor of the Agency having need for the information in order to perform a contract. Recipients of information shall be required to comply with the requirements of the Privacy Act of 1974, as amended, pursuant to 5 U.S.C. 552a(m).

5. A record related to an International Application filed under the Patent Cooperation Treaty in this system of records may be disclosed, as a routine use, to the International Bureau of the World Intellectual Property Organization, pursuant to the Patent Cooperation Treaty.

6. A record in this system of records may be disclosed, as a routine use, to another federal agency for purposes of National Security review (35 U.S.C. 181) and for review pursuant to the Atomic Energy Act (42 U.S.C. 218(c)).

7. A record from this system of records may be disclosed, as a routine use, to the Administrator, General Services, or his/her designee, during an inspection of records conducted by GSA as part of that agency's responsibility to recommend improvements in records management practices and programs, under authority of 44 U.S.C. 2904 and 2906. Such disclosure shall be made in accordance with the GSA regulations governing inspection of records for this purpose, and any other relevant (i.e., GSA or Commerce) directive. Such disclosure shall not be used to make determinations about individuals.

8. A record from this system of records may be disclosed, as a routine use, to the public after either publication of the application pursuant to 35 U.S.C. 122(b) or issuance of a patent pursuant to 35 U.S.C. 151. Further, a record may be disclosed, subject to the limitations of 37 CFR 1.14, as a routine use, to the public if the record was filed in an application which became abandoned or in which the proceedings were terminated and which application is referenced by either a published application, an application open to public inspections or an issued patent.

9. A record from this system of records may be disclosed, as a routine use, to a Federal, State, or local law enforcement agency, if the USPTO becomes aware of a violation or potential violation of law or regulation.

UNITED STATES PATENT AND TRADEMARK OFFICE

Commissioner for Patents
United States Patent and Trademark Office
P.O. Box 1450
Alexandria, VA 22313-1450
www.uspto.gov

RICHARD L MILLER
12 PARKSIDE DRIVE
DIX HILLS NY 11746-4879

MAILED
MAY 09 2011
OFFICE OF PETITIONS

In re Patent No. 6,957,247	:	
Issue Date: October 18, 2005	:	
Application No. 09/401,221	:	ON PETITION
Filed: September 22, 1999	:	
Attorney Docket No. ATEG21A	:	

This is a decision on the petition under 37 CFR 1.378(c), filed March 28, 2011, to accept the unintentionally delayed payment of a maintenance fee for the above-identified patent.

The petition is **GRANTED.**

This patent expired on October 19, 2009 for failure to pay the three and one half year maintenance fee. Since this petition was submitted within twenty-four months after the six-month grace period provided in 37 CFR 1.362(e), the petition was timely filed under the provisions of 37 CFR 1.378(c).

The maintenance fee is hereby accepted and the above-identified patent is reinstated as of the mail date of this decision.

Telephone inquiries concerning this decision should be directed to Terri Johnson at (571) 272-2991.

The patent file is being forwarded to Files Repository.

/Terri Johnson/
Terri Johnson
Petitions Examiner
Office of Petitions

PTO/SB/66 (03-09)
Approved for use through 03/31/2012. OMB 0651-0016
U.S. Patent and Trademark Office: U.S. DEPARTMENT OF COMMERCE
Under the Paperwork Reduction Act of 1995, no persons are required to respond to a collection of information unless it displays valid OMB control number.

PETITION TO ACCEPT UNINTENTIONALLY DELAYED PAYMENT OF MAINTENANCE FEE IN AN EXPIRED PATENT (37 CFR 1.378(c))

Patent Number	Issue Date (YYYY-MM-DD)	Application Number	Filing Date (YYYY-MM-DD)	Docket Number (if applicable)
6288566	2001-09-11	09401312	1999-09-23	032001-035

CAUTION: Maintenance fee (and surcharge, if any) payment must correctly identify: (1) the patent number and (2) the application number of the actual U.S. application leading to issuance of that patent to ensure the fee(s) is/are associated with the correct patent. 37 CFR 1.366(c) and (d).

SMALL ENTITY

☐ Patentee claims, or has previously claimed, small entity status. See 37 CFR 1.27.

LOSS OF ENTITLEMENT TO SMALL ENTITY STATUS

☐ Patentee is no longer entitled to small entity status. See 37 CFR 1.27(g)

NOT Small Entity	Fee	Code	Small Entity	Fee	Code
○	3 ½ year	(1551)	○	3 ½ year	(2551)
◉	7 ½ year	(1552)	○	7 ½ year	(2552)
○	11 ½ year	(1553)	○	11 ½ year	(2553)

SURCHARGE

The surcharge required by 37 CFR 1.20(i)(2) (Fee Code 1558) must be paid as a condition of accepting unintentionally delayed payment of the maintenance fee.

MAINTENANCE FEE (37 CFR 1.20(e)-(g))

The appropriate maintenance fee must be submitted with this petition.

STATEMENT

THE UNDERSIGNED CERTIFIES THAT THE DELAY IN PAYMENT OF THE MAINTENANCE FEE TO THIS PATENT WAS UNINTENTIONAL

PETITIONER(S) REQUEST THAT THE DELAYED PAYMENT OF THE MAINTENANCE FEE BE ACCEPTED AND THE PATENT REINSTATED

THIS PORTION MUST BE COMPLETED BY THE SIGNATORY OR SIGNATORIES

37 CFR 1.378(d) states: "Any petition under this section must be signed by an attorney or agent registered to practice before the Patent and Trademark Office, or by the patentee, the assignee, or other party in interest."

I certify, in accordance with 37 CFR 1.4(d)(4) that I am

◉ An attorney or agent registered to practice before the Patent and Trademark Office

○ A sole patentee

○ A joint patentee; I certify that I am authorized to sign this submission on behalf of all the other patentees.

○ A joint patentee; all of whom are signing this e-petition

○ The assignee of record of the entire interest

PTO/SB/66 (03-09)
Approved for use through 03/31/2012. OMB 0651-0016
U.S. Patent and Trademark Office: U.S. DEPARTMENT OF COMMERCE
Under the Paperwork Reduction Act of 1995, no persons are required to respond to a collection of information unless it displays valid OMB control number.

Patent Practitioner			
A signature of the applicant or representative is required in accordance with 37 CFR 1.33 and 10.18. Please see 37 CFR 1.4(d) for the form of the signature			
Signature	/Kendal M. Sheets/	Date (YYYY-MM-DD)	2010-10-01
Name	Kendal M. Sheets	Registration Number	47077

This collection of information is required by 37 CFR 1.378(c). The information is required to obtain or retain a benefit by the public which is to file (and by the USPTO to process) an application. Confidentiality is governed by 35 U.S.C. 122 and 37 CFR 1.11 and 1.14. This collection is estimated to take 1 hour to complete, including gathering, preparing, and submitting the completed application form to the USPTO. Time will vary depending upon the individual case. Any comments on the amount of time you require to complete this form and/ or suggestions for reducing this burden, should be sent to the Chief Information Officer, U.S. Patent and Trademark Office, U.S. Department of Commerce, P.O. Box 1450, Alexandria, VA 22313-1450. DO NOT SEND FEES OR COMPLETED FORMS TO THIS ADDRESS. **This form can only be used when in conjunction with EFS-Web. If this form is mailed to the USPTO, it may cause delays in reinstating the patent.**

Privacy Act Statement

The Privacy Act of 1974 (P.L. 93-579) requires that you be given certain information in connection with your submission of the attached form related to a patent application or patent. Accordingly, pursuant to the requirements of the Act, please be advised that: (1) the general authority for the collection of this information is 35 U.S.C. 2(b)(2); (2) furnishing of the information solicited is voluntary; and (3) the principal purpose for which the information is used by the U.S. Patent and Trademark Office is to process and/or examine your submission related to a patent application or patent. If you do not furnish the requested information, the U.S. Patent and Trademark Office may not be able to process and/or examine your submission, which may result in termination of proceedings or abandonment of the application or expiration of the patent.

The information provided by you in this form will be subject to the following routine uses:

1. The information on this form will be treated confidentially to the extent allowed under the Freedom of Information Act (5 U.S.C. 552) and the Privacy Act (5 U.S.C. 552a). Records from this system of records may be disclosed to the Department of Justice to determine whether the Freedom of Information Act requires disclosure of these records.

2. A record from this system of records may be disclosed, as a routine use, in the course of presenting evidence to a court, magistrate, or administrative tribunal, including disclosures to opposing counsel in the course of settlement negotiations.

3. A record in this system of records may be disclosed, as a routine use, to a Member of Congress submitting a request involving an individual, to whom the record pertains, when the individual has requested assistance from the Member with respect to the subject matter of the record.

4. A record in this system of records may be disclosed, as a routine use, to a contractor of the Agency having need for the information in order to perform a contract. Recipients of information shall be required to comply with the requirements of the Privacy Act of 1974, as amended, pursuant to 5 U.S.C. 552a(m).

5. A record related to an International Application filed under the Patent Cooperation Treaty in this system of records may be disclosed, as a routine use, to the International Bureau of the World Intellectual Property Organization, pursuant to the Patent Cooperation Treaty.

6. A record in this system of records may be disclosed, as a routine use, to another federal agency for purposes of National Security review (35 U.S.C. 181) and for review pursuant to the Atomic Energy Act (42 U.S.C. 218(c)).

7. A record from this system of records may be disclosed, as a routine use, to the Administrator, General Services, or his/her designee, during an inspection of records conducted by GSA as part of that agency's responsibility to recommend improvements in records management practices and programs, under authority of 44 U.S.C. 2904 and 2906. Such disclosure shall be made in accordance with the GSA regulations governing inspection of records for this purpose, and any other relevant (i.e., GSA or Commerce) directive. Such disclosure shall not be used to make determinations about individuals.

8. A record from this system of records may be disclosed, as a routine use, to the public after either publication of the application pursuant to 35 U.S.C. 122(b) or issuance of a patent pursuant to 35 U.S.C. 151. Further, a record may be disclosed, subject to the limitations of 37 CFR 1.14, as a routine use, to the public if the record was filed in an application which became abandoned or in which the proceedings were terminated and which application is referenced by either a published application, an application open to public inspections or an issued patent.

9. A record from this system of records may be disclosed, as a routine use, to a Federal, State, or local law enforcement agency, if the USPTO becomes aware of a violation or potential violation of law or regulation.

UNITED STATES PATENT AND TRADEMARK OFFICE

Commissioner for Patents
United States Patent and Trademark Office
P.O. Box 1450
Alexandria, VA 22313-1450
www.uspto.gov

In re Patent No. 6288566
Issue Date: September 11,2001
Application No. 09401312
Filed: September 23,1999
Attorney Docket No. 032001-035

:
:DECISION GRANTING PETITION
:UNDER 37 CFR 1.378(c)
:

This is a decision on the electronic petition, filed October 4,2010 ,under 37 CFR 1.378(c) to accept the unintentionally delayed payment of the 7.5 year maintenance fee for the above-identified patent.

The petition is **GRANTED**.

The maintenance fee is accepted, and the above-identified patent reinstated as of October 4,2010 . This decision also constitutes notice that the fee has been accepted. An electronic copy of the petition and this decision has been created as an entry in the Image File Wrapper. Nevertheless, petitioner should print and retain an independent copy.

Telephone inquiries related to this electronic decision should be directed to the Electronic Business Center at 1-866-217-9197.

UNITED STATES PATENT AND TRADEMARK OFFICE

Commissioner for Patents
United States Patent and Trademark Office
P.O. Box 1450
Alexandria, VA 22313-1450
www.uspto.gov

In re Patent No. 6311200
Issue Date: October 30,2001
Application No. 09401313
Filed: September 23,1999
Attorney Docket No. 032001036

:
:DECISION GRANTING PETITION
:UNDER 37 CFR 1.378(c)
:

This is a decision on the electronic petition, filed October 18,2010 ,under 37 CFR 1.378(c) to accept the unintentionally delayed payment of the 7.5 year maintenance fee for the above-identified patent.

The petition is **GRANTED**.

The maintenance fee is accepted, and the above-identified patent reinstated as of October 18,2010 . This decision also constitutes notice that the fee has been accepted. An electronic copy of the petition and this decision has been created as an entry in the Image File Wrapper. Nevertheless, petitioner should print and retain an independent copy.

Telephone inquiries related to this electronic decision should be directed to the Electronic Business Center at 1-866-217-9197.

PTO/SB/66 (03-09)
Approved for use through 03/31/2012. OMB 0651-0016
U.S. Patent and Trademark Office: U.S. DEPARTMENT OF COMMERCE
Under the Paperwork Reduction Act of 1995, no persons are required to respond to a collection of information unless it displays valid OMB control number.

PETITION TO ACCEPT UNINTENTIONALLY DELAYED PAYMENT OF MAINTENANCE FEE IN AN EXPIRED PATENT (37 CFR 1.378(c))

Patent Number	Issue Date (YYYY-MM-DD)	Application Number	Filing Date (YYYY-MM-DD)	Docket Number (if applicable)
6311200	2001-10-30	09401313	1999-09-23	032001036

CAUTION: Maintenance fee (and surcharge, if any) payment must correctly identify: (1) the patent number and (2) the application number of the actual U.S. application leading to issuance of that patent to ensure the fee(s) is/are associated with the correct patent. 37 CFR 1.366(c) and (d).

SMALL ENTITY

☐ Patentee claims, or has previously claimed, small entity status. See 37 CFR 1.27.

LOSS OF ENTITLEMENT TO SMALL ENTITY STATUS

☐ Patentee is no longer entitled to small entity status. See 37 CFR 1.27(g)

NOT Small Entity

	Fee	Code
○	3 ½ year	(1551)
◉	7 ½ year	(1552)
○	11 ½ year	(1553)

Small Entity

	Fee	Code
○	3 ½ year	(2551)
○	7 ½ year	(2552)
○	11 ½ year	(2553)

SURCHARGE

The surcharge required by 37 CFR 1.20(i)(2) (Fee Code 1558) must be paid as a condition of accepting unintentionally delayed payment of the maintenance fee.

MAINTENANCE FEE (37 CFR 1.20(e)-(g))

The appropriate maintenance fee must be submitted with this petition.

STATEMENT

THE UNDERSIGNED CERTIFIES THAT THE DELAY IN PAYMENT OF THE MAINTENANCE FEE TO THIS PATENT WAS UNINTENTIONAL

PETITIONER(S) REQUEST THAT THE DELAYED PAYMENT OF THE MAINTENANCE FEE BE ACCEPTED AND THE PATENT REINSTATED

THIS PORTION MUST BE COMPLETED BY THE SIGNATORY OR SIGNATORIES

37 CFR 1.378(d) states: "Any petition under this section must be signed by an attorney or agent registered to practice before the Patent and Trademark Office, or by the patentee, the assignee, or other party in interest."

I certify, in accordance with 37 CFR 1.4(d)(4) that I am

◉ An attorney or agent registered to practice before the Patent and Trademark Office

○ A sole patentee

○ A joint patentee; I certify that I am authorized to sign this submission on behalf of all the other patentees.

○ A joint patentee; all of whom are signing this e-petition

○ The assignee of record of the entire interest

PTO/SB/66 (03-09)
Approved for use through 03/31/2012. OMB 0651-0016
U.S. Patent and Trademark Office: U.S. DEPARTMENT OF COMMERCE
Under the Paperwork Reduction Act of 1995, no persons are required to respond to a collection of information unless it displays valid OMB control number.

Patent Practitioner			
A signature of the applicant or representative is required in accordance with 37 CFR 1.33 and 10.18. Please see 37 CFR 1.4(d) for the form of the signature			
Signature	/Kendal M. Sheets/	Date (YYYY-MM-DD)	2010-10-15
Name	Kendal M. Sheets	Registration Number	47077

This collection of information is required by 37 CFR 1.378(c). The information is required to obtain or retain a benefit by the public which is to file (and by the USPTO to process) an application. Confidentiality is governed by 35 U.S.C. 122 and 37 CFR 1.11 and 1.14. This collection is estimated to take 1 hour to complete, including gathering, preparing, and submitting the completed application form to the USPTO. Time will vary depending upon the individual case. Any comments on the amount of time you require to complete this form and/ or suggestions for reducing this burden, should be sent to the Chief Information Officer, U.S. Patent and Trademark Office, U.S. Department of Commerce, P.O. Box 1450, Alexandria, VA 22313-1450. DO NOT SEND FEES OR COMPLETED FORMS TO THIS ADDRESS. **This form can only be used when in conjunction with EFS-Web. If this form is mailed to the USPTO, it may cause delays in reinstating the patent.**

Privacy Act Statement

The Privacy Act of 1974 (P.L. 93-579) requires that you be given certain information in connection with your submission of the attached form related to a patent application or patent. Accordingly, pursuant to the requirements of the Act, please be advised that: (1) the general authority for the collection of this information is 35 U.S.C. 2(b)(2); (2) furnishing of the information solicited is voluntary; and (3) the principal purpose for which the information is used by the U.S. Patent and Trademark Office is to process and/or examine your submission related to a patent application or patent. If you do not furnish the requested information, the U.S. Patent and Trademark Office may not be able to process and/or examine your submission, which may result in termination of proceedings or abandonment of the application or expiration of the patent.

The information provided by you in this form will be subject to the following routine uses:

1. The information on this form will be treated confidentially to the extent allowed under the Freedom of Information Act (5 U.S.C. 552) and the Privacy Act (5 U.S.C. 552a). Records from this system of records may be disclosed to the Department of Justice to determine whether the Freedom of Information Act requires disclosure of these records.

2. A record from this system of records may be disclosed, as a routine use, in the course of presenting evidence to a court, magistrate, or administrative tribunal, including disclosures to opposing counsel in the course of settlement negotiations.

3. A record in this system of records may be disclosed, as a routine use, to a Member of Congress submitting a request involving an individual, to whom the record pertains, when the individual has requested assistance from the Member with respect to the subject matter of the record.

4. A record in this system of records may be disclosed, as a routine use, to a contractor of the Agency having need for the information in order to perform a contract. Recipients of information shall be required to comply with the requirements of the Privacy Act of 1974, as amended, pursuant to 5 U.S.C. 552a(m).

5. A record related to an International Application filed under the Patent Cooperation Treaty in this system of records may be disclosed, as a routine use, to the International Bureau of the World Intellectual Property Organization, pursuant to the Patent Cooperation Treaty.

6. A record in this system of records may be disclosed, as a routine use, to another federal agency for purposes of National Security review (35 U.S.C. 181) and for review pursuant to the Atomic Energy Act (42 U.S.C. 218(c)).

7. A record from this system of records may be disclosed, as a routine use, to the Administrator, General Services, or his/her designee, during an inspection of records conducted by GSA as part of that agency's responsibility to recommend improvements in records management practices and programs, under authority of 44 U.S.C. 2904 and 2906. Such disclosure shall be made in accordance with the GSA regulations governing inspection of records for this purpose, and any other relevant (i.e., GSA or Commerce) directive. Such disclosure shall not be used to make determinations about individuals.

8. A record from this system of records may be disclosed, as a routine use, to the public after either publication of the application pursuant to 35 U.S.C. 122(b) or issuance of a patent pursuant to 35 U.S.C. 151. Further, a record may be disclosed, subject to the limitations of 37 CFR 1.14, as a routine use, to the public if the record was filed in an application which became abandoned or in which the proceedings were terminated and which application is referenced by either a published application, an application open to public inspections or an issued patent.

9. A record from this system of records may be disclosed, as a routine use, to a Federal, State, or local law enforcement agency, if the USPTO becomes aware of a violation or potential violation of law or regulation.

UNITED STATES PATENT AND TRADEMARK OFFICE

Commissioner for Patents
United States Patent and Trademark Office
P.O. Box 1450
Alexandria, VA 22313-1450
www.uspto.gov

VENABLE BAETJER
HOWARD & CIVILETTI
PO BOX 34385
WASHINGTON DC 20043-9998

MAILED

FEB 27 2012

OFFICE OF PETITIONS

In re Patent No. 6,318,904
Issue Date: 20 November, 2001
Application No. 09/403,278
Filed: 18 October, 1999
Attorney Docket No. 32066-151286

DECISION

This is a decision on the petition filed on 28 December, 2011, under 37 C.F.R. §1.27(g)(2) requesting that status as a Small Entity be removed.

NOTE:

The address on the petition is other than that of record.

If Petitioner desires to receive future correspondence regarding this application, the appropriate Notice must be submitted.

A courtesy copy of this decision will be mailed to Petitioner.

However, all future correspondence will be directed to the address of record until such time as appropriate instructions are received to the contrary.

In view of their duty of candor to the Office to properly inquire to ascertain the accuracy of representations made before the Office (*see*: 37 C.F.R. §1.4, §10.18, MPEP §410), Petitioners always are reminded of the responsibility to review their records and submit accurate information to the Office.

Petitioners also are reminded to chart out the fees paid/fees due/balance due in their submission(s) to the Office. (*See, generally*: 37 C.F.R. §1.27, §1.28, MPEP §509.02 and 509-03.)

Patent No. 6,318,904
Application No. 09/403,278

Petitioner's submission is **ACCEPTED**.

In accordance with the request, status as a Small Entity will be removed, and Petitioner is required to pay fees at the schedule set forth for not-small entities. **The additional fees were charged as authorized.**

The availability of applications and application papers online to applicants/practitioners who diligently associate their Customer Number with the respective application(s) now provides an applicant/practitioner on-demand information as to events/transactions in an application.

Out of an abundance of caution, Petitioners always are reminded that that those registered to practice and all others who make representations before the Office **must** inquire into the underlying facts of representations made to the Office and support averments with the appropriate documentation–since all owe to the Office the continuing duty to disclose.[1]

The instant application is released to the IFW Files Repository in due course.

Telephone inquiries regarding this decision may be directed to the undersigned at (571) 272-3214—it is noted, however, that all practice before the Office is in writing (see: 37 C.F.R. §1.2[2]) and the proper authority for action on any matter in this regard are the statutes (35 U.S.C.), regulations (37 C.F.R.) and the commentary on policy (MPEP). Therefore, no telephone discussion may be controlling or considered authority for Petitioner's action(s).

/John J. Gillon, Jr./
John J. Gillon, Jr.
Senior Attorney
Office of Petitions

CC:
ANDREW WILFORD
311 EAST YORK STREET
SAVANNAH, GA 31401-3814

---

[1] See supplement of 17 June, 1999. The Patent and Trademark Office is relying on Petitioner's duty of candor and good faith and accepting a statement made by Petitioner. See Changes to Patent Practice and Procedure, 62 Fed. Reg. at 53160 and 53178, 1203 Off. Gaz. Pat. Office at 88 and 103 (responses to comments 64 and 109)(applicant obligated under 37 C.F.R. §10.18 to inquire into the underlying facts and circumstances when providing statements to the Patent and Trademark Office).

[2] The regulations at 37 C.F.R. §1.2 provide:

§1.2 Business to be transacted in writing.

All business with the Patent and Trademark Office should be transacted in writing. The personal attendance of applicants or their attorneys or agents at the Patent and Trademark Office is unnecessary. The action of the Patent and Trademark Office will be based exclusively on the written record in the Office. No attention will be paid to any alleged oral promise, stipulation, or understanding in relation to which there is disagreement or doubt.

UNITED STATES PATENT AND TRADEMARK OFFICE

Commissioner for Patents
United States Patent and Trademark Office
P.O. Box 1450
Alexandria, VA 22313-1450
www.uspto.gov

In re Patent No. 6255451
Issue Date: July 3,2001
Application No. 09403676
Filed: August 10,1999
Attorney Docket No. 10873.204-US

:
:DECISION GRANTING PETITION
:UNDER 37 CFR 1.378(c)
:

This is a decision on the electronic petition, filed August 25,2010 ,under 37 CFR 1.378(c) to accept the unintentionally delayed payment of the 7.5 year maintenance fee for the above-identified patent.

The petition is **GRANTED**.

The maintenance fee is accepted, and the above-identified patent reinstated as of August 25,2010 . This decision also constitutes notice that the fee has been accepted. An electronic copy of the petition and this decision has been created as an entry in the Image File Wrapper. Nevertheless, petitioner should print and retain an independent copy.

Telephone inquiries related to this electronic decision should be directed to the Electronic Business Center at 1-866-217-9197.

PTO/SB/66 (03-09)
Approved for use through 03/31/2012. OMB 0651-0016
U.S. Patent and Trademark Office: U.S. DEPARTMENT OF COMMERCE
Under the Paperwork Reduction Act of 1995, no persons are required to respond to a collection of information unless it displays valid OMB control number.

PETITION TO ACCEPT UNINTENTIONALLY DELAYED PAYMENT OF MAINTENANCE FEE IN AN EXPIRED PATENT (37 CFR 1.378(c))

Patent Number	Issue Date (YYYY-MM-DD)	Application Number	Filing Date (YYYY-MM-DD)	Docket Number (if applicable)
6,255,451	2001-07-03	09/403,676	1999-08-10	10873.204-US

CAUTION: Maintenance fee (and surcharge, if any) payment must correctly identify: (1) the patent number and (2) the application number of the actual U.S. application leading to issuance of that patent to ensure the fee(s) is/are associated with the correct patent. 37 CFR 1.366(c) and (d).

SMALL ENTITY

☐ Patentee claims, or has previously claimed, small entity status. See 37 CFR 1.27.

LOSS OF ENTITLEMENT TO SMALL ENTITY STATUS

☐ Patentee is no longer entitled to small entity status. See 37 CFR 1.27(g)

NOT Small Entity

	Fee	Code
○	3 ½ year	(1551)
◉	7 ½ year	(1552)
○	11 ½ year	(1553)

Small Entity

	Fee	Code
○	3 ½ year	(2551)
○	7 ½ year	(2552)
○	11 ½ year	(2553)

SURCHARGE

The surcharge required by 37 CFR 1.20(i)(2) (Fee Code 1558) must be paid as a condition of accepting unintentionally delayed payment of the maintenance fee.

MAINTENANCE FEE (37 CFR 1.20(e)-(g))

The appropriate maintenance fee must be submitted with this petition.

STATEMENT

THE UNDERSIGNED CERTIFIES THAT THE DELAY IN PAYMENT OF THE MAINTENANCE FEE TO THIS PATENT WAS UNINTENTIONAL

PETITIONER(S) REQUEST THAT THE DELAYED PAYMENT OF THE MAINTENANCE FEE BE ACCEPTED AND THE PATENT REINSTATED

THIS PORTION MUST BE COMPLETED BY THE SIGNATORY OR SIGNATORIES

37 CFR 1.378(d) states: "Any petition under this section must be signed by an attorney or agent registered to practice before the Patent and Trademark Office, or by the patentee, the assignee, or other party in interest."

I certify, in accordance with 37 CFR 1.4(d)(4) that I am

◉ An attorney or agent registered to practice before the Patent and Trademark Office

○ A sole patentee

○ A joint patentee; I certify that I am authorized to sign this submission on behalf of all the other patentees.

○ A joint patentee; all of whom are signing this e-petition

○ The assignee of record of the entire interest

PTO/SB/66 (03-09)
Approved for use through 03/31/2012. OMB 0651-0016
U.S. Patent and Trademark Office: U.S. DEPARTMENT OF COMMERCE
Under the Paperwork Reduction Act of 1995, no persons are required to respond to a collection of information unless it displays valid OMB control number.

Patent Practitioner			
A signature of the applicant or representative is required in accordance with 37 CFR 1.33 and 10.18. Please see 37 CFR 1.4(d) for the form of the signature			
Signature	/Michael W. Krenicky, Reg. # 45411/	Date (YYYY-MM-DD)	2010-08-25
Name	Michael W. Krenicky	Registration Number	45411

This collection of information is required by 37 CFR 1.378(c). The information is required to obtain or retain a benefit by the public which is to file (and by the USPTO to process) an application. Confidentiality is governed by 35 U.S.C. 122 and 37 CFR 1.11 and 1.14. This collection is estimated to take 1 hour to complete, including gathering, preparing, and submitting the completed application form to the USPTO. Time will vary depending upon the individual case. Any comments on the amount of time you require to complete this form and/ or suggestions for reducing this burden, should be sent to the Chief Information Officer, U.S. Patent and Trademark Office, U.S. Department of Commerce, P.O. Box 1450, Alexandria, VA 22313-1450. DO NOT SEND FEES OR COMPLETED FORMS TO THIS ADDRESS. **This form can only be used when in conjunction with EFS-Web. If this form is mailed to the USPTO, it may cause delays in reinstating the patent.**

Privacy Act Statement

The Privacy Act of 1974 (P.L. 93-579) requires that you be given certain information in connection with your submission of the attached form related to a patent application or patent. Accordingly, pursuant to the requirements of the Act, please be advised that: (1) the general authority for the collection of this information is 35 U.S.C. 2(b)(2); (2) furnishing of the information solicited is voluntary; and (3) the principal purpose for which the information is used by the U.S. Patent and Trademark Office is to process and/or examine your submission related to a patent application or patent. If you do not furnish the requested information, the U.S. Patent and Trademark Office may not be able to process and/or examine your submission, which may result in termination of proceedings or abandonment of the application or expiration of the patent.

The information provided by you in this form will be subject to the following routine uses:

1. The information on this form will be treated confidentially to the extent allowed under the Freedom of Information Act (5 U.S.C. 552) and the Privacy Act (5 U.S.C. 552a). Records from this system of records may be disclosed to the Department of Justice to determine whether the Freedom of Information Act requires disclosure of these records.

2. A record from this system of records may be disclosed, as a routine use, in the course of presenting evidence to a court, magistrate, or administrative tribunal, including disclosures to opposing counsel in the course of settlement negotiations.

3. A record in this system of records may be disclosed, as a routine use, to a Member of Congress submitting a request involving an individual, to whom the record pertains, when the individual has requested assistance from the Member with respect to the subject matter of the record.

4. A record in this system of records may be disclosed, as a routine use, to a contractor of the Agency having need for the information in order to perform a contract. Recipients of information shall be required to comply with the requirements of the Privacy Act of 1974, as amended, pursuant to 5 U.S.C. 552a(m).

5. A record related to an International Application filed under the Patent Cooperation Treaty in this system of records may be disclosed, as a routine use, to the International Bureau of the World Intellectual Property Organization, pursuant to the Patent Cooperation Treaty.

6. A record in this system of records may be disclosed, as a routine use, to another federal agency for purposes of National Security review (35 U.S.C. 181) and for review pursuant to the Atomic Energy Act (42 U.S.C. 218(c)).

7. A record from this system of records may be disclosed, as a routine use, to the Administrator, General Services, or his/her designee, during an inspection of records conducted by GSA as part of that agency's responsibility to recommend improvements in records management practices and programs, under authority of 44 U.S.C. 2904 and 2906. Such disclosure shall be made in accordance with the GSA regulations governing inspection of records for this purpose, and any other relevant (i.e., GSA or Commerce) directive. Such disclosure shall not be used to make determinations about individuals.

8. A record from this system of records may be disclosed, as a routine use, to the public after either publication of the application pursuant to 35 U.S.C. 122(b) or issuance of a patent pursuant to 35 U.S.C. 151. Further, a record may be disclosed, subject to the limitations of 37 CFR 1.14, as a routine use, to the public if the record was filed in an application which became abandoned or in which the proceedings were terminated and which application is referenced by either a published application, an application open to public inspections or an issued patent.

9. A record from this system of records may be disclosed, as a routine use, to a Federal, State, or local law enforcement agency, if the USPTO becomes aware of a violation or potential violation of law or regulation.

SPE RESPONSE FOR CERTIFICATE OF CORRECTION

Paper No.: _____

DATE : 7/29/10

TO SPE OF : ART UNIT 3763 (3700)

SUBJECT : Request for Certificate of Correction for Appl. No.: 10/374,000 Patent No.: 7,713,251

Please respond to this request for a certificate of correction within 7 days.

FOR IFW FILES:

Please review the requested changes/corrections as shown in the **COCIN** document(s) in the IFW application image. No new matter should be introduced, nor should the scope or meaning of the claims be changed.

Please complete the response (see below) and forward the completed response to scanning using document code **COCX**.

FOR PAPER FILES:

Please review the requested changes/corrections as shown in the attached certificate of correction. Please complete this form (see below) and forward it with the file to:

Certificates of Correction Branch (CofC)
Randolph Square – 9D10-A
Palm Location 7580

Ernest C. White, LIE
Randolph Sq. Ste 9D62A
703-756-1590

Thank You For Your Assistance

The request for issuing the above-identified correction(s) is hereby:

Note your decision on the appropriate box.

☒ **Approved**	**All** changes apply.
☐ **Approved in Part**	Specify below which changes **do not** apply.
☐ **Denied**	State the reasons for denial below.

Nicholas D. Lucchesi SPE _____ ART UNIT 3763

PTO/SB/44 (09-07)
Approved for use through 08/31/2010. OMB 0651-0033
U.S. Patent and Trademark Office; U.S. DEPARTMENT OF COMMERCE
Under the Paperwork Reduction Act of 1995, no persons are required to respond to a collection of information unless it displays a valid OMB control number.
(Also Form PTO-1050)

UNITED STATES PATENT AND TRADEMARK OFFICE
CERTIFICATE OF CORRECTION

PATENT NO. : 7,713,251 Page 1 of 1

APPLICATION NO.: 10/374,000

ISSUE DATE : May 11, 2010

INVENTOR(S) : Steven J. Tallarida et al.

It is certified that an error appears or errors appear in the above-identified patent and that said Letters Patent is hereby corrected as shown below:

On face page, in the field (54), in column 1, line 1-2, delete "IMPLANTABLE VASCULAR ACCESS DEVICE WITH CERAMIC NEEDLE GUARD INSERT" and insert - - "IMPLANTABLE VASCULAR ACCESS DEVICE" - -, therefor.

In column 1, line 1-2, delete "IMPLANTABLE VASCULAR ACCESS DEVICE WITH CERAMIC NEEDLE GUARD INSERT" and insert - - "IMPLANTABLE VASCULAR ACCESS DEVICE" - -, therefor.

In column 1, line 3, below Title, insert - -"CROSS REFERENCE TO RELATED APPLICATIONS"- -, as a heading.

OK to enter
corr 7/30/10

Grossman Tucker Perreault & Pfleger PLLC
55 So. Commercial St.
Manchester, NH 03101.

This collection of information is required by 37 CFR 1.322, 1.323, and 1.324. The information is required to obtain or retain a benefit by the public which is to file (and by the USPTO to process) an application. Confidentiality is governed by 35 U.S.C. 122 and 37 CFR 1.14. This collection is estimated to take 1.0 hour to complete, including gathering, preparing, and submitting the completed application form to the USPTO. Time will vary depending upon the individual case. Any comments on the amount of time you require to complete this form and/or suggestions for reducing this burden, should be sent to the Chief Information Officer, U.S. Patent and Trademark Office, U.S. Department of Commerce, P.O. Box 1450, Alexandria, VA 22313-1450. DO NOT SEND FEES OR COMPLETED FORMS TO THIS ADDRESS. **SEND TO: Attention Certificate of Corrections Branch, Commissioner for Patents, P.O. Box 1450, Alexandria, VA 22313-1450.**

If you need assistance in completing the form, call 1-800-PTO-9199 and select option 2

UNITED STATES PATENT AND TRADEMARK OFFICE

Commissioner for Patents
United States Patent and Trademark Office
P.O. Box 1450
Alexandria, VA 22313-1450
www.uspto.gov

MAILED
AUG 09 2011
OFFICE OF PETITIONS

COLIN P. ABRAHAMS
5850 CANOGA AVENUE
SUITE 400
WOODLAND HILLS CA 91367

In re Patent No. 6,280,039	:	
Issue Date: August 28, 2001	:	
Application No. 09/406,914	:	ON PETITION
Filed: September 24, 1999	:	
Attorney Docket No. 1086-101.US	:	

This is a decision on the petition under 37 CFR 1.378(c), filed June 24, 2011, to accept the unintentionally delayed payment of a maintenance fee for the above-identified patent.

The petition is **GRANTED**.

This patent expired on August 29, 2009 for failure to pay the second maintenance fee. Since this petition was submitted within twenty-four months after the six-month grace period provided in 37 CFR 1.362(e), the petition was timely filed under the provisions of 37 CFR 1.378(c).

The maintenance fee is hereby accepted and the above-identified patent is reinstated as of the mail date of this decision.

Telephone inquiries concerning this decision should be directed to the undersigned at (571) 272-3208.

/KOC/
Karen Creasy
Petitions Examiner
Office of Petitions

PTO/SB/66 (03-09)
Approved for use through 03/31/2012. OMB 0651-0016
U.S. Patent and Trademark Office: U.S. DEPARTMENT OF COMMERCE
Under the Paperwork Reduction Act of 1995, no persons are required to respond to a collection of information unless it displays valid OMB control number.

PETITION TO ACCEPT UNINTENTIONALLY DELAYED PAYMENT OF MAINTENANCE FEE IN AN EXPIRED PATENT (37 CFR 1.378(c))

Patent Number	Issue Date (YYYY-MM-DD)	Application Number	Filing Date (YYYY-MM-DD)	Docket Number (if applicable)
7092372	2006-08-15	09407008	1999-09-28	245/189

CAUTION: Maintenance fee (and surcharge, if any) payment must correctly identify: (1) the patent number and (2) the application number of the actual U.S. application leading to issuance of that patent to ensure the fee(s) is/are associated with the correct patent. 37 CFR 1.366(c) and (d).

SMALL ENTITY

☐ Patentee claims, or has previously claimed, small entity status. See 37 CFR 1.27.

LOSS OF ENTITLEMENT TO SMALL ENTITY STATUS

☐ Patentee is no longer entitled to small entity status. See 37 CFR 1.27(g)

NOT Small Entity

	Fee	Code
◉	3 ½ year	(1551)
○	7 ½ year	(1552)
○	11 ½ year	(1553)

Small Entity

	Fee	Code
○	3 ½ year	(2551)
○	7 ½ year	(2552)
○	11 ½ year	(2553)

SURCHARGE

The surcharge required by 37 CFR 1.20(i)(2) (Fee Code 1558) must be paid as a condition of accepting unintentionally delayed payment of the maintenance fee.

MAINTENANCE FEE (37 CFR 1.20(e)-(g))

The appropriate maintenance fee must be submitted with this petition.

STATEMENT

THE UNDERSIGNED CERTIFIES THAT THE DELAY IN PAYMENT OF THE MAINTENANCE FEE TO THIS PATENT WAS UNINTENTIONAL

PETITIONER(S) REQUEST THAT THE DELAYED PAYMENT OF THE MAINTENANCE FEE BE ACCEPTED AND THE PATENT REINSTATED

THIS PORTION MUST BE COMPLETED BY THE SIGNATORY OR SIGNATORIES

37 CFR 1.378(d) states: "Any petition under this section must be signed by an attorney or agent registered to practice before the Patent and Trademark Office, or by the patentee, the assignee, or other party in interest."

I certify, in accordance with 37 CFR 1.4(d)(4) that I am

◉ An attorney or agent registered to practice before the Patent and Trademark Office

○ A sole patentee

○ A joint patentee; I certify that I am authorized to sign this submission on behalf of all the other patentees.

○ A joint patentee; all of whom are signing this e-petition

○ The assignee of record of the entire interest

PTO/SB/66 (03-09)
Approved for use through 03/31/2012. OMB 0651-0016
U.S. Patent and Trademark Office: U.S. DEPARTMENT OF COMMERCE
Under the Paperwork Reduction Act of 1995, no persons are required to respond to a collection of information unless it displays valid OMB control number.

Patent Practitioner			
A signature of the applicant or representative is required in accordance with 37 CFR 1.33 and 10.18. Please see 37 CFR 1.4(d) for the form of the signature			
Signature	/Kendal M. Sheets/	Date (YYYY-MM-DD)	2010-10-13
Name	Kendal M. Sheets	Registration Number	47077

This collection of information is required by 37 CFR 1.378(c). The information is required to obtain or retain a benefit by the public which is to file (and by the USPTO to process) an application. Confidentiality is governed by 35 U.S.C. 122 and 37 CFR 1.11 and 1.14. This collection is estimated to take 1 hour to complete, including gathering, preparing, and submitting the completed application form to the USPTO. Time will vary depending upon the individual case. Any comments on the amount of time you require to complete this form and/ or suggestions for reducing this burden, should be sent to the Chief Information Officer, U.S. Patent and Trademark Office, U.S. Department of Commerce, P.O. Box 1450, Alexandria, VA 22313-1450. DO NOT SEND FEES OR COMPLETED FORMS TO THIS ADDRESS. **This form can only be used when in conjunction with EFS-Web. If this form is mailed to the USPTO, it may cause delays in reinstating the patent.**

Privacy Act Statement

The Privacy Act of 1974 (P.L. 93-579) requires that you be given certain information in connection with your submission of the attached form related to a patent application or patent. Accordingly, pursuant to the requirements of the Act, please be advised that: (1) the general authority for the collection of this information is 35 U.S.C. 2(b)(2); (2) furnishing of the information solicited is voluntary; and (3) the principal purpose for which the information is used by the U.S. Patent and Trademark Office is to process and/or examine your submission related to a patent application or patent. If you do not furnish the requested information, the U.S. Patent and Trademark Office may not be able to process and/or examine your submission, which may result in termination of proceedings or abandonment of the application or expiration of the patent.

The information provided by you in this form will be subject to the following routine uses:

1. The information on this form will be treated confidentially to the extent allowed under the Freedom of Information Act (5 U.S.C. 552) and the Privacy Act (5 U.S.C. 552a). Records from this system of records may be disclosed to the Department of Justice to determine whether the Freedom of Information Act requires disclosure of these records.

2. A record from this system of records may be disclosed, as a routine use, in the course of presenting evidence to a court, magistrate, or administrative tribunal, including disclosures to opposing counsel in the course of settlement negotiations.

3. A record in this system of records may be disclosed, as a routine use, to a Member of Congress submitting a request involving an individual, to whom the record pertains, when the individual has requested assistance from the Member with respect to the subject matter of the record.

4. A record in this system of records may be disclosed, as a routine use, to a contractor of the Agency having need for the information in order to perform a contract. Recipients of information shall be required to comply with the requirements of the Privacy Act of 1974, as amended, pursuant to 5 U.S.C. 552a(m).

5. A record related to an International Application filed under the Patent Cooperation Treaty in this system of records may be disclosed, as a routine use, to the International Bureau of the World Intellectual Property Organization, pursuant to the Patent Cooperation Treaty.

6. A record in this system of records may be disclosed, as a routine use, to another federal agency for purposes of National Security review (35 U.S.C. 181) and for review pursuant to the Atomic Energy Act (42 U.S.C. 218(c)).

7. A record from this system of records may be disclosed, as a routine use, to the Administrator, General Services, or his/her designee, during an inspection of records conducted by GSA as part of that agency's responsibility to recommend improvements in records management practices and programs, under authority of 44 U.S.C. 2904 and 2906. Such disclosure shall be made in accordance with the GSA regulations governing inspection of records for this purpose, and any other relevant (i.e., GSA or Commerce) directive. Such disclosure shall not be used to make determinations about individuals.

8. A record from this system of records may be disclosed, as a routine use, to the public after either publication of the application pursuant to 35 U.S.C. 122(b) or issuance of a patent pursuant to 35 U.S.C. 151. Further, a record may be disclosed, subject to the limitations of 37 CFR 1.14, as a routine use, to the public if the record was filed in an application which became abandoned or in which the proceedings were terminated and which application is referenced by either a published application, an application open to public inspections or an issued patent.

9. A record from this system of records may be disclosed, as a routine use, to a Federal, State, or local law enforcement agency, if the USPTO becomes aware of a violation or potential violation of law or regulation.

UNITED STATES PATENT AND TRADEMARK OFFICE

Commissioner for Patents
United States Patent and Trademark Office
P.O. Box 1450
Alexandria, VA 22313-1450
www.uspto.gov

In re Patent No. 7092372
Issue Date: August 15,2006
Application No. 09407008
Filed: September 28,1999
Attorney Docket No. 245/189

:
:DECISION GRANTING PETITION
:UNDER 37 CFR 1.378(c)
:

This is a decision on the electronic petition, filed October 14,2010 ,under 37 CFR 1.378(c) to accept the unintentionally delayed payment of the 3.5 year maintenance fee for the above-identified patent.

The petition is **GRANTED**.

The maintenance fee is accepted, and the above-identified patent reinstated as of October 14,2010 . This decision also constitutes notice that the fee has been accepted. An electronic copy of the petition and this decision has been created as an entry in the Image File Wrapper. Nevertheless, petitioner should print and retain an independent copy.

Telephone inquiries related to this electronic decision should be directed to the Electronic Business Center at 1-866-217-9197.

UNITED STATES PATENT AND TRADEMARK OFFICE

Commissioner for Patents
United States Patent and Trademark Office
P.O. Box 1450
Alexandria, VA 22313-1450
www.uspto.gov

In re Patent No. 6241715
Issue Date: June 5,2001
Application No. 09408424
Filed: September 29,1999
Attorney Docket No.

:
:DECISION GRANTING PETITION
:UNDER 37 CFR 1.378(c)
:

This is a decision on the electronic petition, filed June 2,2011 ,under 37 CFR 1.378(c) to accept the unintentionally delayed payment of the 7.5 year maintenance fee for the above-identified patent.

The petition is **GRANTED**.

The maintenance fee is accepted, and the above-identified patent reinstated as of June 2,2011 . This decision also constitutes notice that the fee has been accepted. An electronic copy of the petition and this decision has been created as an entry in the Image File Wrapper. Nevertheless, petitioner should print and retain an independent copy.

Telephone inquiries related to this electronic decision should be directed to the Electronic Business Center at 1-866-217-9197.

PTO/SB/66 (03-09)
Approved for use through 03/31/2012. OMB 0651-0016
U.S. Patent and Trademark Office: U.S. DEPARTMENT OF COMMERCE
Under the Paperwork Reduction Act of 1995, no persons are required to respond to a collection of information unless it displays valid OMB control number.

PETITION TO ACCEPT UNINTENTIONALLY DELAYED PAYMENT OF MAINTENANCE FEE IN AN EXPIRED PATENT (37 CFR 1.378(c))

Patent Number	Issue Date (YYYY-MM-DD)	Application Number	Filing Date (YYYY-MM-DD)	Docket Number (if applicable)
6241715	2001-06-05	09/408,424	1999-09-29	

CAUTION: Maintenance fee (and surcharge, if any) payment must correctly identify: (1) the patent number and (2) the application number of the actual U.S. application leading to issuance of that patent to ensure the fee(s) is/are associated with the correct patent. 37 CFR 1.366(c) and (d).

SMALL ENTITY

☒ Patentee claims, or has previously claimed, small entity status. See 37 CFR 1.27.

LOSS OF ENTITLEMENT TO SMALL ENTITY STATUS

☐ Patentee is no longer entitled to small entity status. See 37 CFR 1.27(g)

NOT Small Entity	Fee	Code	Small Entity	Fee	Code
○	3 ½ year	(1551)	○	3 ½ year	(2551)
○	7 ½ year	(1552)	◉	7 ½ year	(2552)
○	11 ½ year	(1553)	○	11 ½ year	(2553)

SURCHARGE

The surcharge required by 37 CFR 1.20(i)(2) (Fee Code 1558) must be paid as a condition of accepting unintentionally delayed payment of the maintenance fee.

MAINTENANCE FEE (37 CFR 1.20(e)-(g))

The appropriate maintenance fee must be submitted with this petition.

STATEMENT

THE UNDERSIGNED CERTIFIES THAT THE DELAY IN PAYMENT OF THE MAINTENANCE FEE TO THIS PATENT WAS UNINTENTIONAL

PETITIONER(S) REQUEST THAT THE DELAYED PAYMENT OF THE MAINTENANCE FEE BE ACCEPTED AND THE PATENT REINSTATED

THIS PORTION MUST BE COMPLETED BY THE SIGNATORY OR SIGNATORIES

37 CFR 1.378(d) states: "Any petition under this section must be signed by an attorney or agent registered to practice before the Patent and Trademark Office, or by the patentee, the assignee, or other party in interest."

I certify, in accordance with 37 CFR 1.4(d)(4) that I am

○ An attorney or agent registered to practice before the Patent and Trademark Office

○ A sole patentee

◉ A joint patentee; I certify that I am authorized to sign this submission on behalf of all the other patentees.

○ A joint patentee; all of whom are signing this e-petition

○ The assignee of record of the entire interest

PTO/SB/66 (03-09)
Approved for use through 03/31/2012. OMB 0651-0016
U.S. Patent and Trademark Office: U.S. DEPARTMENT OF COMMERCE
Under the Paperwork Reduction Act of 1995, no persons are required to respond to a collection of information unless it displays valid OMB control number.

A Joint Patentee and I certify that I am authorized to sign this submission on behalf of all the other patentees			
A signature of the applicant or representative is required in accordance with 37 CFR 1.33 and 10.18. Please see 37 CFR 1.4(d) for the form of the signature.			
Signature	/Reid Houser/	Date (YYYY-MM-DD)	2011-06-02
Name	Reid Houser		

This collection of information is required by 37 CFR 1.378(c). The information is required to obtain or retain a benefit by the public which is to file (and by the USPTO to process) an application. Confidentiality is governed by 35 U.S.C. 122 and 37 CFR 1.11 and 1.14. This collection is estimated to take 1 hour to complete, including gathering, preparing, and submitting the completed application form to the USPTO. Time will vary depending upon the individual case. Any comments on the amount of time you require to complete this form and/ or suggestions for reducing this burden, should be sent to the Chief Information Officer, U.S. Patent and Trademark Office, U.S. Department of Commerce, P.O. Box 1450, Alexandria, VA 22313-1450. DO NOT SEND FEES OR COMPLETED FORMS TO THIS ADDRESS. **This form can only be used when in conjunction with EFS-Web. If this form is mailed to the USPTO, it may cause delays in reinstating the patent.**

Privacy Act Statement

The Privacy Act of 1974 (P.L. 93-579) requires that you be given certain information in connection with your submission of the attached form related to a patent application or patent. Accordingly, pursuant to the requirements of the Act, please be advised that: (1) the general authority for the collection of this information is 35 U.S.C. 2(b)(2); (2) furnishing of the information solicited is voluntary; and (3) the principal purpose for which the information is used by the U.S. Patent and Trademark Office is to process and/or examine your submission related to a patent application or patent. If you do not furnish the requested information, the U.S. Patent and Trademark Office may not be able to process and/or examine your submission, which may result in termination of proceedings or abandonment of the application or expiration of the patent.

The information provided by you in this form will be subject to the following routine uses:

1. The information on this form will be treated confidentially to the extent allowed under the Freedom of Information Act (5 U.S.C. 552) and the Privacy Act (5 U.S.C. 552a). Records from this system of records may be disclosed to the Department of Justice to determine whether the Freedom of Information Act requires disclosure of these records.

2. A record from this system of records may be disclosed, as a routine use, in the course of presenting evidence to a court, magistrate, or administrative tribunal, including disclosures to opposing counsel in the course of settlement negotiations.

3. A record in this system of records may be disclosed, as a routine use, to a Member of Congress submitting a request involving an individual, to whom the record pertains, when the individual has requested assistance from the Member with respect to the subject matter of the record.

4. A record in this system of records may be disclosed, as a routine use, to a contractor of the Agency having need for the information in order to perform a contract. Recipients of information shall be required to comply with the requirements of the Privacy Act of 1974, as amended, pursuant to 5 U.S.C. 552a(m).

5. A record related to an International Application filed under the Patent Cooperation Treaty in this system of records may be disclosed, as a routine use, to the International Bureau of the World Intellectual Property Organization, pursuant to the Patent Cooperation Treaty.

6. A record in this system of records may be disclosed, as a routine use, to another federal agency for purposes of National Security review (35 U.S.C. 181) and for review pursuant to the Atomic Energy Act (42 U.S.C. 218(c)).

7. A record from this system of records may be disclosed, as a routine use, to the Administrator, General Services, or his/her designee, during an inspection of records conducted by GSA as part of that agency's responsibility to recommend improvements in records management practices and programs, under authority of 44 U.S.C. 2904 and 2906. Such disclosure shall be made in accordance with the GSA regulations governing inspection of records for this purpose, and any other relevant (i.e., GSA or Commerce) directive. Such disclosure shall not be used to make determinations about individuals.

8. A record from this system of records may be disclosed, as a routine use, to the public after either publication of the application pursuant to 35 U.S.C. 122(b) or issuance of a patent pursuant to 35 U.S.C. 151. Further, a record may be disclosed, subject to the limitations of 37 CFR 1.14, as a routine use, to the public if the record was filed in an application which became abandoned or in which the proceedings were terminated and which application is referenced by either a published application, an application open to public inspections or an issued patent.

9. A record from this system of records may be disclosed, as a routine use, to a Federal, State, or local law enforcement agency, if the USPTO becomes aware of a violation or potential violation of law or regulation.

UNITED STATES PATENT AND TRADEMARK OFFICE

COMMISSIONER FOR PATENTS
UNITED STATES PATENT AND TRADEMARK OFFICE
P.O. BOX 1450
ALEXANDRIA, VA 22313-1450
www.uspto.gov
DIW Dec-10

Paper No. 10

BOURQUE & ASSOCIATES
INTELLECTUAL PROPERTY ATTORNEYS, P.A.
835 HANOVER STREET
SUITE 301
MANCHESTER NH 03104

MAILED

DEC 09 2010

OFFICE OF PETITIONS

In re Patent No. 6,265,983 :
Issue Date: 07/24/2001 :
Application Number: 09/408,798 : DECISION ON PETITION
Filing Date: 09/30/1999 :
Attorney Docket Number: :
BAILLAR-001A

This is a decision in reference to the petition, filed on December 22, 2009, under 37 CFR 1.378(c), to accept the unintentionally delayed payment of the first and second maintenance fees for the above-identified patent. This is also a decision in reference to the petition, filed on June 22, 2010, under 37 CFR 1.378(b), to accept the unavoidably delayed payment of the first and second maintenance fees for the above-identified patent.

The petitions are **DISMISSED**.

If reconsideration of this decision is desired, a petition for reconsideration under 37 CFR 1.378(e) must be filed within TWO (2) MONTHS from the mail date of this decision. No extension of this 2-month time limit can be granted under 37 CFR 1.136(a) or (b). Any such petition for reconsideration must be accompanied by the petition fee of $400.00 as set forth in 37 CFR 1.17(h). The petition for reconsideration should include an exhaustive attempt to provide the lacking item(s) noted below, since, after a decision on the petition for reconsideration, no further reconsideration or review of the matter will be undertaken by the Director.

The patent issued on July 24, 2001. The first maintenance fee could have been paid from July 24, 2004, through January 24,

2005, or, with a surcharge during the period from January 25, 2005 through July 24, 2005. Accordingly, the patent expired at midnight July 24, 2005, for failure to timely submit the first maintenance fee.

PETITION UNDER 37 CFR 1.378(c)

37 CFR 1.378(c) provides that a petition to accept an unintentionally delayed payment of a maintenance fee must be filed within twenty-four months of the six-month grace period provided in § 1.362(e) and must include:

(1) The required maintenance fee set forth in § 1.20(e) through (g);

(2) The surcharge set forth in § 1.20(i)(2); and

(3) A statement that the delay in payment of the maintenance fee was unintentional.

35 U.S.C. § 41(c)(1) authorizes the Director to accept a delayed maintenance fee payment within twenty-four (24) months after the expiration of the six-month grace period specified in 35 U.S.C. § 41(b) if the delay is shown to have been unintentional, and authorizes the Director to accept a delayed maintenance fee payment at any time if the delay is shown to have been unavoidable. Thus, 35 U.S.C. § 41(c)(1) does not authorize the Director to accept a delayed maintenance fee payment later than twenty-four (24) months after the expiration of the six-month grace period specified in 35 U.S.C. § 41(b) unless the delay is shown to have been unavoidable. Since the instant petition was not filed within twenty-four (24) months after the expiration of the six-month grace period specified in 35 U.S.C. § 41(b), the Director cannot accept a delayed maintenance fee payment for the above-identified patent under 37 CFR 1.378(c).

The petition under 37 CFR 1.378(c) is therefore **dismissed**.

PETITION UNDER 37 CFR 1.378(b)

A petition to accept the delayed payment of a maintenance fee under 35 USC 41(c) and 37 CFR 1.378(b) must be accompanied by (1) an adequate, verified showing that the delay was unavoidable, since reasonable care was taken to ensure that the maintenance fee would be paid timely and that the petition was filed promptly after the patentee was notified of, or otherwise became aware of, the expiration of the patent, (2) payment of the appropriate maintenance fee, unless previously submitted, and (3) payment of the surcharge set forth in 37 CFR 1.20(i)(1).

This petition lacks item (1) above.

Petitioner, sole inventor Paul D. Baillargeon (hereinafter "Baillargeon"), states that at the time the patent issued, petitioners' registered patent practitioner, Daniel J. Bourque (hereinafter "Bourque"), was responsible for tracking the maintenance fee and informing Baillargeon when the maintenance fees were required to be paid. Petitioner have shown that Bourque sent letters to petitioner's home address dated July 27, 2004 and September 26, 2005, informing petitioner of the need to pay the first maintenance fee.

Petitioner Baillargeon asserts that he did not receive the letters, however, because he had moved to a new address because of irreconcilable difficulties with his spouse. Petitioner did not file a change of address with the USPS, however, because he believed that his spouse was forwarding all mail to him, and that "he had the expectation of returning to his home upon resolution of his family matters."

Petitioner states, in pertinent part: that

> On July 14, 2004, I moved out of my house due to irreconcilable difficulties with my spouse and moved to a room rental in Allenstown, New Hampshire.
>
> My spouse refused to allow me into our home and divorce proceedings were filed on August 25, 2004. My spouse periodically contacted me and gave me my mail that was mostly bills for the house and told me I had no other mail.
>
> I lived in the room rental in Allenstown for almost 16 months and did not contact the United States Post Office to have my mail forwarded during that time, because this was only a temporary residence and I knew I would be able to move back into my house after the divorce settlement or be residing elsewhere.
>
> During the prosecution of this patent I had received all correspondence and updates from Bourque & Associates via email or phone. I have always kept the same email address and was available for correspondence.
>
> After moving to a new permanent address in November, 2005, I directly contacted utility companies to setup

> [*sic*] new accounts and took no further steps to change or forward mail that had been sent to my original home address in Chichester, New Hampshire. Having never conducted any correspondence by regular mail where all prior correspondence and communications had been by email in the past from Bourque & Associates, I felt secure that I could be reached if and when necessary.
>
> After the patent issued, I received no further emails from Bourque and Associates until December 3, 2009 when I initiated contact with them through email to inquire on the status of the patents I held. I received a reply and information that two of my patents were abandoned due to non-payment of maintenance fees.

Petitioner's counsel further states:

> Unbeknownst to either Petitioner or Attorney Bourque, Petitioner's spouse was apparently destroying certain of Petitioner's mail and failed to forward any of Attorney Bourque's correspondence to Petitioner. Petitioner's spouse also insisted that there was no other mail for the Petitioner.

The Director may accept late payment of the maintenance fee if the delay is shown to the satisfaction of the Director to have been "unavoidable".[1]

A late maintenance fee is considered under the same standard as that for reviving an abandoned application under 35 U.S.C. § 133 because 35 U.S.C. § 41(c)(1) uses identical language (i.e. "unavoidable delay").[2] Decisions reviving abandoned applications have adopted the reasonably prudent person standard in determining if the delay was unavoidable.[3] In this regard:

> The word 'unavoidable' . . . is applicable to ordinary human affairs, and requires no more or greater care or diligence than is generally used and observed by prudent and careful men in relation to their most important business. It permits them in the exercise of

---

[1] 35 U.S.C. § 41(c)(1).

[2] Ray v. Lehman, 55 F.3d 606, 608-09, 34 USPQ2d 1786, 1787 (Fed. Cir. 1995) (quoting In re Patent No. 4,409,763, 7 USPQ2d 1798, 1800 (Comm'r Pat. 1989)).

[3] Ex parte Pratt, 1887 Dec. Comm'r Pat. 31, 32-33 (Comm'r Pat. 1887)(the term "unavoidable" "is applicable to ordinary human affairs, and requires no more or greater care or diligence than is generally used by prudent and careful men in relation to their most important business").

> this care to rely upon the ordinary and trustworthy agencies of mail and telegraph, worthy and reliable employees, and such other means and instrumentalities as are usually employed in such important business. If unexpectedly, or through the unforeseen fault or imperfection of these agencies and instrumentalities, there occurs a failure, it may properly be said to be unavoidable, all other conditions of promptness in its rectification being present.[4]

A patent owner's failure to pay a maintenance fee may be considered to have been "unavoidable" if the patent owner "exercised the due care of a reasonably prudent person."[5] This determination is to be made on a "case-by-case basis, taking all the facts and circumstances into account."[6] Unavoidable delay under 35 U.S.C. § 41(b) is measured by the same standard as that for reviving an abandoned application under 35 U.S.C. § 133.[7] Under 35 U.S.C. § 133, the Director may revive an abandoned application if the delay in responding to the relevant outstanding Office requirement is shown to the satisfaction of the Director to have been "unavoidable". Decisions on reviving abandoned applications have adopted the reasonably prudent person standard in determining if the delay was unavoidable.[8] However, a petition to revive an application as unavoidably abandoned cannot be granted where a petitioner has failed to meet his or her burden of establishing the cause of the unavoidable delay.[9] In view of In re Patent No. 4,409,763, this same standard will be applied to determine whether "unavoidable" delay within the meaning of 37 CFR 1.378(b) occurred.

---

[4] In re Mattullath, 38 App. D.C. 497, 514-15 (1912)(quoting Ex parte Pratt, 1887 Dec. Comm'r Pat. 31, 32-33 (1887)); see also Winkler v. Ladd, 221 F. Supp. 550, 552, 138 USPQ 666, 167-68 (D.D.C. 1963), aff'd, 143 USPQ 172 (D.C. Cir. 1963); Ex parte Henrich, 1913 Dec. Comm'r Pat. 139, 141 (1913). In addition, decisions on revival are made on a "case-by-case basis, taking all the facts and circumstances into account." Smith v. Mossinghoff, 671 F.2d 533, 538, 213 USPQ 977, 982 (D.C. Cir. 1982). Finally, a petition cannot be granted where a petitioner has failed to meet his or her burden of establishing that the delay was "unavoidable." Haines v. Quigg, 673 F. Supp. 314, 316-17, 5 USPQ2d 1130, 1131-32 (N.D. Ind. 1987).

[5] Ray v. Lehman, 55 F.3d 606, 608-09 (Fed.Cir.), cert. denied, -- U.S. ---, 116 S.Ct. 304, L.Ed.2d 209 (1995).

[6] Smith v. Mossinghoff, 671 F.2d 533, 538, 213 USPQ 977, 982 (D.C. Cir. 1982).

[7] In re Patent No. 4,409,763, 7 USPQ2d 1798, 1800 (PTO Comm'r 1988).

[8] Ex parte Pratt, 1887 Dec. Comm'r Pat. 31, 32-33 (Comm'r Pat. 1887)(the term "unavoidable" "is applicable to ordinary human affairs, and requires no more or greater care or diligence than is generally used and observed by prudent and careful men in relation to their most important business"); In re Mattullath, 38 App. D.C. 497, 514-15 (D.C. Cir. 1912); Ex parte Henrich, 1913 Dec. Comm'r Pat. 139, 141 (Comm'r Pat. 1913).

[9] Haines v. Quigg, 673 F. Supp. 314, 5 USPQ2d 1130 (N.D. Ind. 1987).

As 35 U.S.C. § 41(c) requires the payment of fees at specified intervals to maintain a patent in force, rather than some response to a specific action by the Office under 35 U.S.C. § 133, a reasonably prudent person in the exercise of due care and diligence would have taken steps to ensure the timely payment of such maintenance fees.[10] That is, an adequate showing that the delay was "unavoidable" within the meaning of 35 U.S.C. § 41(c) and 37 CFR 1.378(b)(3) requires a showing of the steps taken to ensure the timely payment of the maintenance fees for this patent.[11]

Thus, a grantable petition under 37 CFR 1.378(b) requires a documented showing that the delay was unavoidable. In this regard, statements must be provided from all persons having first-hand knowledge of the delay, setting forth the facts as they know them. As such, if petitioner believes that his ex-spouse received the letters from Bourque, a statement from the ex-spouse must be provided setting forth whether or not she received the letters and what efforts were made by her to forward the letters to petitioner.

Further in this regard, a showing of unavoidable delay requires diligence commensurate with the level of a "reasonably prudent person in relation to their most important business." In this regard, it is not understood why petitioner would not have notified his attorney of his new address upon moving to ensure that any patent related correspondence was mailed by petitioner's counsel to his current address.

While the difficulties petitioner incurred in dealing with the dissolution of his marriage are unfortunate, the showing of record, that petitioner failed to inform his attorney of his current correspondence address, leads to a finding of a lack of diligence, rather than unavoidable delay, on the part of petitioner.

With regard to petitioner's apparent assertion that he expected to receive notification by email, rather than solely by U.S. mail, that the maintenance fee was due, if petitioner has any documentation in which Bourque stated that maintenance fee reminders would be sent by email, or in a manner other than by postal mail, such should be provided with any renewed petition.

---

[10] Ray, 55 F.3d at 609, 34 USPQ2d at 1788.

[11] Id.

Nevertheless, petitioner is reminded that the failure of communication between an applicant and counsel is not unavoidable delay within the meaning of 37 CFR 1.137(a) or 1.378(b).[12] Specifically, delay resulting from a lack of proper communication between a patent holder and a registered representative as to who bore the responsible for payment of a maintenance fee does not constitute unavoidable delay within the meaning of 35 USC 41(c) and 37 CFR 1.378(b).[13] Moreover, the Office is not the proper forum for resolving a dispute as to the effectiveness of communication between parties regarding the responsibility for paying a maintenance fee.[14]

As the showing of record does not rise to the level of unavoidable delay, the petition will be **dismissed**.

Petitioner is cautioned to avoid submitting personal information in a patent application that may contribute to identity theft. If personal information such as social security numbers, bank account numbers, or credit card numbers are included in documents submitted to the USPTO (other than a check or credit card authorization form PTO-2038 submitted for payment purposes), petitioners should consider redacting such personal information from the documents before submitting them to the USPTO. This type of personal information is never required by the USPTO to support a petition or an application. Petitioner is advised that any information submitted in an application is available to the public after publication of the application (unless a non-publication request in compliance with 37 CFR 1.213(a) is made in the application) or issuance of a patent. Furthermore, information from an abandoned application may also be available to the public if the application is referenced in a published application or an issued patent (see 37 CFR 1.14). Checks and credit card authorization forms PTO-2038 submitted for payment purposes are not retained in the application file and therefore are not publicly available.

Petitioner should note that if this petition is not renewed, or if renewed and not granted, then the maintenance fee and post-expiration surcharge are refundable. The $400.00 petition fee for seeking reconsideration is not refundable. Any request for refund should be in writing to the address noted below.

---

[12] In re Kim, 12 USPQ2d 1595 (Comm'r Pat. 1988).

[13] See Ray, at 610, 34 USPQ2d at 1789.

[14] Id.

Further correspondence with respect to this matter should be addressed as follows:

By mail: Mail Stop Petition
Commissioner for Patents
P.O. Box 1450
Alexandria, VA 22313-1450

By FAX: (571) 273-8300
Attn: Office of Petitions

By hand: Customer Service Window
Mail Stop Petition
Randolph Building
401 Dulany Street
Alexandria, VA 22314

The address in the petition is different than the correspondence address. A courtesy copy of this decision is being mailed to the address in the petition. All future correspondence, however, will be mailed solely to the address of record. A change of correspondence address should be filed if the correspondence address needs to be updated.

Telephone inquiries should be directed to the undersigned at 571-272-3231.

DWood

Douglas I. Wood
Senior Petitions Attorney
Office of Petitions

Cc: DANIELS PATENT LAW, LLC
43 CENTRE STREET
CONCORD NH 03301

UNITED STATES PATENT AND TRADEMARK OFFICE

Commissioner for Patents
United States Patent and Trademark Office
P.O. Box 1450
Alexandria, VA 22313-1450
www.uspto.gov

BOURQUE & ASSOCIATES
INTELLECTUAL PROPERTY ATTORNEYS, P.A.
835 HANOVER STREET
SUITE 301
MANCHESTER NH 03104

MAILED

MAR 28 2011

OFFICE OF PETITIONS

In re Application of	:	
Paul D. Baillargeon	:	
Application No. 09/408,798	:	DECISION ON REQUEST FOR REFUND
Filed: September 30, 1999	:	
Attorney Docket No. BAILLAR-001A	:	

This is a decision on the Request For Refund filed, December 30, 2010.

Applicant request a refund of the fees (3.5 year maintenance fee, 7.5 year maintenance fee and surcharge fee totaling $3,370.00) submitted with the petition on December 17, 2009.

Applicant is advised that a total of $3,370.00 has been previously refunded to the **Payee** of the above fees ($1,240.00 on January 7, 2010 and $2,130.00 on February 17, 2011). Therefore, the request has been granted to the extent that the fees were refunded to the **Payee** of the fees submitted on December 17, 2009. Further, a refund of $700.00 (submitted on June 22, 2010) was done by electronic transfer on February 22, 2011.

Any questions concerning this matter may be directed to the undersigned at (571) 272-3208.

/KOC/
Karen Creasy
Petitions Examiner
Office of Petitions

Cc:

DANIELS PATENT LAW PLLC
43 CENTRE STREET
CONCORD, NH 03301

UNITED STATES PATENT AND TRADEMARK OFFICE

Commissioner for Patents
United States Patent and Trademark Office
P.O. Box 1450
Alexandria, VA 22313-1450
www.uspto.gov

WADDEY & PATTERSON, P.C.
1600 DIVISION STREET, SUITE 500
NASHVILLE TN 37203

MAILED
JUN 07 2011
OFFICE OF PETITIONS

In re Patent No. 6,371,977 :
Issue Date: April 16, 2002 :
Application No. 09/408,861 : ON PETITION
Filed: September 30, 1999 :
Attorney Docket No. **N-4310** :

This is a decision on the petition under 37 CFR 1.378(c), filed May 16, 2011, to accept the unintentionally delayed payment of a maintenance fee for the above-identified patent.

There is no indication that the petition is signed by a registered patent attorney or patent agent of record. However, in accordance with 37 CFR 1.34, the signature of Mary Jo Redman appearing on the correspondence shall constitute a representation to the United States Patent and Trademark Office that he is authorized to represent the particular party in whose behalf he acts. If, Mary Jo Redman desires to receive correspondence regarding this file, the appropriate power of attorney documents must be submitted. A courtesy copy of this decision is being mailed to Mary Jo Redman, the petitioner herein. However, until otherwise instructed, all future correspondence regarding this application file will be directed solely to the above-noted correspondence address of record.

This patent expired at midnight March 23, 2011, for failure to pay the 7½ year maintenance fee. Since this petition was submitted within twenty-four months after the six-month grace period provided in 37 CFR 1.362(e), the petition was timely filed under the provisions of 37 CFR 1.378(c).

The petition is hereby **GRANTED**.

The maintenance fee is hereby accepted and the above-identified patent is reinstated as of the mail date of this decision.

A petition to accept the unintentionally delayed payment of a maintenance fee under 37 CFR 1.378(c) must be accompanied by (1) a statement that the delay was unintentional, (2) payment of the appropriate maintenance fee, unless previously submitted, and (3) payment of the surcharge set forth in 37 CFR 1.20(i)(2).

It is not apparent whether the person signing the statement of unintentional delay was in a position to have firsthand or direct knowledge of the facts and circumstances of the delay at issue. Nevertheless, such statement is being treated as having been made as the result of a reasonable inquiry into the facts and circumstances of such delay. In the event that such an inquiry has not been made, petitioner must make such an inquiry. If such inquiry results in the discovery that the delay in paying the maintenance fee under 37 CFR 1.378(c) was intentional, petitioner must notify the Office.

Petitioner will not receive future correspondence related to maintenance fees for the patent unless a "Fee Address" Indication Form (see PTO/SB/47) and Request for Customer Number (see PTO/SB/125) are submitted.

Telephone inquiries concerning this decision should be directed to JoAnne Burke at (571) 272-4584.

JoAnne Burke
Petitions Examiner
Office of Petitions

cc: Mary Jo Redman
6387 Caminito Lazaro
San Diego, CA 92111

PTO/SB/66 (03-09)
Approved for use through 03/31/2012. OMB 0651-0016
U.S. Patent and Trademark Office: U.S. DEPARTMENT OF COMMERCE
Under the Paperwork Reduction Act of 1995, no persons are required to respond to a collection of information unless it displays valid OMB control number.

PETITION TO ACCEPT UNINTENTIONALLY DELAYED PAYMENT OF MAINTENANCE FEE IN AN EXPIRED PATENT (37 CFR 1.378(c))

Patent Number	Issue Date (YYYY-MM-DD)	Application Number	Filing Date (YYYY-MM-DD)	Docket Number (if applicable)
6375516	2002-04-23	09408917	1999-09-30	008193-D7315

CAUTION: Maintenance fee (and surcharge, if any) payment must correctly identify: (1) the patent number and (2) the application number of the actual U.S. application leading to issuance of that patent to ensure the fee(s) is/are associated with the correct patent. 37 CFR 1.366(c) and (d).

SMALL ENTITY

☐ Patentee claims, or has previously claimed, small entity status. See 37 CFR 1.27.

LOSS OF ENTITLEMENT TO SMALL ENTITY STATUS

☐ Patentee is no longer entitled to small entity status. See 37 CFR 1.27(g)

NOT Small Entity			Small Entity		
	Fee	Code		Fee	Code
○	3 ½ year	(1551)	○	3 ½ year	(2551)
◉	7 ½ year	(1552)	○	7 ½ year	(2552)
○	11 ½ year	(1553)	○	11 ½ year	(2553)

SURCHARGE

The surcharge required by 37 CFR 1.20(i)(2) (Fee Code 1558) must be paid as a condition of accepting unintentionally delayed payment of the maintenance fee.

MAINTENANCE FEE (37 CFR 1.20(e)-(g))

The appropriate maintenance fee must be submitted with this petition.

STATEMENT

THE UNDERSIGNED CERTIFIES THAT THE DELAY IN PAYMENT OF THE MAINTENANCE FEE TO THIS PATENT WAS UNINTENTIONAL

PETITIONER(S) REQUEST THAT THE DELAYED PAYMENT OF THE MAINTENANCE FEE BE ACCEPTED AND THE PATENT REINSTATED

THIS PORTION MUST BE COMPLETED BY THE SIGNATORY OR SIGNATORIES

37 CFR 1.378(d) states: "Any petition under this section must be signed by an attorney or agent registered to practice before the Patent and Trademark Office, or by the patentee, the assignee, or other party in interest."

I certify, in accordance with 37 CFR 1.4(d)(4) that I am

◉ An attorney or agent registered to practice before the Patent and Trademark Office

○ A sole patentee

○ A joint patentee; I certify that I am authorized to sign this submission on behalf of all the other patentees.

○ A joint patentee; all of whom are signing this e-petition

○ The assignee of record of the entire interest

PTO/SB/66 (03-09)
Approved for use through 03/31/2012. OMB 0651-0016
U.S. Patent and Trademark Office: U.S. DEPARTMENT OF COMMERCE
Under the Paperwork Reduction Act of 1995, no persons are required to respond to a collection of information unless it displays valid OMB control number.

Patent Practitioner			
A signature of the applicant or representative is required in accordance with 37 CFR 1.33 and 10.18. Please see 37 CFR 1.4(d) for the form of the signature			
Signature	/Kendal M. Sheets/	Date (YYYY-MM-DD)	2010-10-15
Name	Kendal M. Sheets	Registration Number	47077

This collection of information is required by 37 CFR 1.378(c). The information is required to obtain or retain a benefit by the public which is to file (and by the USPTO to process) an application. Confidentiality is governed by 35 U.S.C. 122 and 37 CFR 1.11 and 1.14. This collection is estimated to take 1 hour to complete, including gathering, preparing, and submitting the completed application form to the USPTO. Time will vary depending upon the individual case. Any comments on the amount of time you require to complete this form and/ or suggestions for reducing this burden, should be sent to the Chief Information Officer, U.S. Patent and Trademark Office, U.S. Department of Commerce, P.O. Box 1450, Alexandria, VA 22313-1450. DO NOT SEND FEES OR COMPLETED FORMS TO THIS ADDRESS. **This form can only be used when in conjunction with EFS-Web. If this form is mailed to the USPTO, it may cause delays in reinstating the patent.**

Privacy Act Statement

The Privacy Act of 1974 (P.L. 93-579) requires that you be given certain information in connection with your submission of the attached form related to a patent application or patent. Accordingly, pursuant to the requirements of the Act, please be advised that: (1) the general authority for the collection of this information is 35 U.S.C. 2(b)(2); (2) furnishing of the information solicited is voluntary; and (3) the principal purpose for which the information is used by the U.S. Patent and Trademark Office is to process and/or examine your submission related to a patent application or patent. If you do not furnish the requested information, the U.S. Patent and Trademark Office may not be able to process and/or examine your submission, which may result in termination of proceedings or abandonment of the application or expiration of the patent.

The information provided by you in this form will be subject to the following routine uses:

1. The information on this form will be treated confidentially to the extent allowed under the Freedom of Information Act (5 U.S.C. 552) and the Privacy Act (5 U.S.C. 552a). Records from this system of records may be disclosed to the Department of Justice to determine whether the Freedom of Information Act requires disclosure of these records.

2. A record from this system of records may be disclosed, as a routine use, in the course of presenting evidence to a court, magistrate, or administrative tribunal, including disclosures to opposing counsel in the course of settlement negotiations.

3. A record in this system of records may be disclosed, as a routine use, to a Member of Congress submitting a request involving an individual, to whom the record pertains, when the individual has requested assistance from the Member with respect to the subject matter of the record.

4. A record in this system of records may be disclosed, as a routine use, to a contractor of the Agency having need for the information in order to perform a contract. Recipients of information shall be required to comply with the requirements of the Privacy Act of 1974, as amended, pursuant to 5 U.S.C. 552a(m).

5. A record related to an International Application filed under the Patent Cooperation Treaty in this system of records may be disclosed, as a routine use, to the International Bureau of the World Intellectual Property Organization, pursuant to the Patent Cooperation Treaty.

6. A record in this system of records may be disclosed, as a routine use, to another federal agency for purposes of National Security review (35 U.S.C. 181) and for review pursuant to the Atomic Energy Act (42 U.S.C. 218(c)).

7. A record from this system of records may be disclosed, as a routine use, to the Administrator, General Services, or his/her designee, during an inspection of records conducted by GSA as part of that agency's responsibility to recommend improvements in records management practices and programs, under authority of 44 U.S.C. 2904 and 2906. Such disclosure shall be made in accordance with the GSA regulations governing inspection of records for this purpose, and any other relevant (i.e., GSA or Commerce) directive. Such disclosure shall not be used to make determinations about individuals.

8. A record from this system of records may be disclosed, as a routine use, to the public after either publication of the application pursuant to 35 U.S.C. 122(b) or issuance of a patent pursuant to 35 U.S.C. 151. Further, a record may be disclosed, subject to the limitations of 37 CFR 1.14, as a routine use, to the public if the record was filed in an application which became abandoned or in which the proceedings were terminated and which application is referenced by either a published application, an application open to public inspections or an issued patent.

9. A record from this system of records may be disclosed, as a routine use, to a Federal, State, or local law enforcement agency, if the USPTO becomes aware of a violation or potential violation of law or regulation.

UNITED STATES PATENT AND TRADEMARK OFFICE

Commissioner for Patents
United States Patent and Trademark Office
P.O. Box 1450
Alexandria, VA 22313-1450
www.uspto.gov

In re Patent No. 6375516
Issue Date: April 23,2002
Application No. 09408917
Filed: September 30,1999
Attorney Docket No. 008193-D7315

:
:DECISION GRANTING PETITION
:UNDER 37 CFR 1.378(c)
:

This is a decision on the electronic petition, filed October 18,2010 ,under 37 CFR 1.378(c) to accept the unintentionally delayed payment of the 7.5 year maintenance fee for the above-identified patent.

The petition is **GRANTED**.

The maintenance fee is accepted, and the above-identified patent reinstated as of October 18,2010 . This decision also constitutes notice that the fee has been accepted. An electronic copy of the petition and this decision has been created as an entry in the Image File Wrapper. Nevertheless, petitioner should print and retain an independent copy.

Telephone inquiries related to this electronic decision should be directed to the Electronic Business Center at 1-866-217-9197.

UNITED STATES PATENT AND TRADEMARK OFFICE

Commissioner for Patents
United States Patent and Trademark Office
P.O. Box 1450
Alexandria, VA 22313-1450
www.uspto.gov

IBM CORPORATION
INTELLECTUAL PROPERTY LAW
11501 BURNET ROAD
AUSTIN TX 78758

MAILED

SEP 06 2011

OFFICE OF PETITIONS

In re Application of :
HSU, et al :
Application No. 09/409,473 : DECISION ON PETITION
Filed: September 30, 1999 :
Attorney Docket No. AT9-99-474 :

This is a decision on the petition under the unintentional provisions of 37 CFR 1.137(b), filed July 15, 2011, to revive the above-identified application.

The petition is **GRANTED**.

The application became abandoned for failure to timely file corrected drawings on or before February 1, 2010, as required by the Notice of Allowability, mailed October 30, 2009, which set a statutory period for reply of three (3) months. Accordingly, the application became abandoned on February 2, 2010. A Notice of Abandonment was mailed February 25, 2010.

The petition satisfies the requirements of 37 CFR 1.137(b) in that petitioner has supplied (1) the reply in the form of replacement drawings, (2) the petition fee of $1620; and (3) a proper statement of unintentional delay.

Telephone inquiries concerning this decision should be directed to the undersigned at (571) 272-6735.

All other inquiries should be directed to the Office of Data Management at (571) 272-4200.

The application is being referred to the Office of Data Management for review of the reply and processing and into a patent.

/Diane C. Goodwyn/
Diane C. Goodwyn
Petitions Examiner
Office of Petitions

UNITED STATES PATENT AND TRADEMARK OFFICE

Commissioner for Patents
United States Patent and Trademark Office
P.O. Box 1450
Alexandria, VA 22313-1450
www.uspto.gov

HOWARD & HOWARD ATTORNEYS PLLC
450 WEST FOURTH STREET
ROYAL OAK MI 48067

MAILED
AUG 12 2011
OFFICE OF PETITIONS

In re Patent No. 6,205,883 :
Issue Date: March 27, 2001 :
Application No. 09/409,514 : DECISION ON PETITION
Filed: September 30, 1999 :
Attorney Docket No. **65.748-448** :

This is a decision on the petition under 37 CFR 1.378(c), filed March 28, 2011, to accept the unintentionally delayed payment of a maintenance fee for the above-identified patent.

The petition is **GRANTED**.

This patent expired at midnight on March 27, 2009 for failure to pay the seven and one half year maintenance fee. Since this petition was submitted within twenty-four months after the six-month grace period provided in 37 CFR 1.362(e), the petition was timely filed under the provisions of 37 CFR 1.378(c).

The maintenance fee is hereby accepted and the above-identified patent is reinstated as of the mail date of this decision.

The file does not indicate a change of address has been submitted, although the address given on the petition differs from the address of record. If appropriate, a change of fee address (form PTO/SB/47) and a request for customer number (form PTO/SB/125) should be filed in accordance with Manual of Patent Examining Procedure, section 2540. A courtesy copy of this decision is being mailed to the address on the petition. However, the Office will mail all future correspondence solely to the address of record.

It is not apparent whether the person signing the statement of unintentional delay was in a position to have firsthand or direct knowledge of the facts and circumstances of the delay at issue. Nevertheless, such statement is being treated as having been made as the result of a reasonable inquiry into the facts and circumstances of such delay. In the event that such an inquiry has not been made, petitioner must make such an inquiry. If such inquiry results in the

discovery that the delay in paying the maintenance fee under 37 CFR 1.378(c) was intentional, petitioner must notify the Office.

Telephone inquiries concerning this decision should be directed to Tredelle Jackson at (571) 272-2783.

Ramesh Krishnamurthy
Petitions Examiner
Office of Petitions

cc: **THOMAS E. ANDERSON**
GIFFORD, KRASS, SPRINKLE,
ANDERSON & CITKOWSKI, P.C.
P.O. BOX 7021
TROY MI 48007-7021

UNITED STATES PATENT AND TRADEMARK OFFICE

Commissioner for Patents
United States Patent and Trademark Office
P.O. Box 1450
Alexandria, VA 22313-1450
www.uspto.gov

ST JUDE MEDICAL ATRIAL FIBRILLATION DIVISION
LEGAL DEPARTMENT
ONE ST JUDE MEDICAL DRIVE
ST PAUL MN 55117-9913

MAILED
JAN 26 2012
OFFICE OF PETITIONS

In re
Hoshen Tu
Application No. 09/410,902
Filed: October 2, 1999
Patent No. 6,306,133
Issued: October 23, 2001

DECISION

This is a decision on the fee deficiency submission under 37 CFR 1.28(c), filed December 23, 2011.

The fee deficiency submission under 37 CFR 1.28 of $660 for the 3.5 year maintenance fee is hereby accepted.

The change of status to large entity has been entered.

Telephone inquiries concerning this matter may be directed to the undersigned at (571) 272-3207.

Cliff Congo
Petitions Attorney
Office of Petitions

UNITED STATES PATENT AND TRADEMARK OFFICE

Commissioner for Patents
United States Patent and Trademark Office
P.O. Box 1450
Alexandria, VA 22313-1450
www.uspto.gov

FROST BROWN TODD, LLC
2200 PNC CENTER
201 E. FIFTH STREET
CINCINNATI, OH 45202

MAILED
AUG 29 2011
OFFICE OF PETITIONS

In re Patent No. 6,269,653 :
Issue Date: August 7, 2007 :
Application No. 09/412,016 : ON PETITION
Filed: October 4, 1999 :
Attorney Docket No. :

This is a decision on the petition under 37 CFR 1.378(c), filed August 4, 2011, to accept the unintentionally delayed payment of a maintenance fee for the above-identified patent.

The petition is **GRANTED**.

This patent expired on August 7, 2009 for failure to pay the 7 ½ year maintenance fee. Since this petition was submitted within twenty-four months after the six-month grace period provided in 37 CFR 1.362(e), the petition was timely filed under the provisions of 37 CFR 1.378(c).

The maintenance fee is hereby accepted and the above-identified patent is reinstated as of the mail date of this decision.

Telephone inquiries concerning this decision should be directed to undersigned at (571) 272-1642.

/AMW/
April M. Wise
Petitions Examiner
Office of Petitions

U.S. Patent and Trademark Office: U.S. DEPARTMENT OF COMMERCE
Under the Paperwork Reduction Act of 1995, no persons are required to respond to a collection of information unless it displays valid OMB control number.

PETITION TO ACCEPT UNINTENTIONALLY DELAYED PAYMENT OF MAINTENANCE FEE IN AN EXPIRED PATENT (37 CFR 1.378(c))

Patent Number	Issue Date (YYYY-MM-DD)	Application Number	Filing Date (YYYY-MM-DD)	Docket Number (if applicable)
6463713	2002-10-15	09412580	1999-10-05	0655-Misc

CAUTION: Maintenance fee (and surcharge, if any) payment must correctly identify: (1) the patent number and (2) the application number of the actual U.S. application leading to issuance of that patent to ensure the fee(s) is/are associated with the correct patent. 37 CFR 1.366(c) and (d).

SMALL ENTITY

☐ Patentee claims, or has previously claimed, small entity status. See 37 CFR 1.27.

LOSS OF ENTITLEMENT TO SMALL ENTITY STATUS

☐ Patentee is no longer entitled to small entity status. See 37 CFR 1.27(g)

NOT Small Entity

	Fee	Code
○	3 ½ year	(1551)
◉	7 ½ year	(1552)
○	11 ½ year	(1553)

Small Entity

	Fee	Code
○	3 ½ year	(2551)
○	7 ½ year	(2552)
○	11 ½ year	(2553)

SURCHARGE

The surcharge required by 37 CFR 1.20(i)(2) (Fee Code 1558) must be paid as a condition of accepting unintentionally delayed payment of the maintenance fee.

MAINTENANCE FEE (37 CFR 1.20(e)-(g))

The appropriate maintenance fee must be submitted with this petition.

STATEMENT

THE UNDERSIGNED CERTIFIES THAT THE DELAY IN PAYMENT OF THE MAINTENANCE FEE TO THIS PATENT WAS UNINTENTIONAL

PETITIONER(S) REQUEST THAT THE DELAYED PAYMENT OF THE MAINTENANCE FEE BE ACCEPTED AND THE PATENT REINSTATED

THIS PORTION MUST BE COMPLETED BY THE SIGNATORY OR SIGNATORIES

37 CFR 1.378(d) states: "Any petition under this section must be signed by an attorney or agent registered to practice before the Patent and Trademark Office, or by the patentee, the assignee, or other party in interest."

I certify, in accordance with 37 CFR 1.4(d)(4) that I am

◉ An attorney or agent registered to practice before the Patent and Trademark Office

○ A sole patentee

○ A joint patentee; I certify that I am authorized to sign this submission on behalf of all the other patentees.

○ A joint patentee; all of whom are signing this e-petition

○ The assignee of record of the entire interest

Under the Paperwork Reduction Act of 1995, no persons are required to respond to a collection of information unless it displays valid OMB control number.

Patent Practitioner			
A signature of the applicant or representative is required in accordance with 37 CFR 1.33 and 10.18. Please see 37 CFR 1.4(d) for the form of the signature			
Signature	/Benoit Castel/	Date (YYYY-MM-DD)	2011-01-10
Name	Benoit Castel	Registration Number	35041

This collection of information is required by 37 CFR 1.378(c). The information is required to obtain or retain a benefit by the public which is to file (and by the USPTO to process) an application. Confidentiality is governed by 35 U.S.C. 122 and 37 CFR 1.11 and 1.14. This collection is estimated to take 1 hour to complete, including gathering, preparing, and submitting the completed application form to the USPTO. Time will vary depending upon the individual case. Any comments on the amount of time you require to complete this form and/ or suggestions for reducing this burden, should be sent to the Chief Information Officer, U.S. Patent and Trademark Office, U.S. Department of Commerce, P.O. Box 1450, Alexandria, VA 22313-1450. DO NOT SEND FEES OR COMPLETED FORMS TO THIS ADDRESS. **This form can only be used when in conjunction with EFS-Web. If this form is mailed to the USPTO, it may cause delays in reinstating the patent.**

Privacy Act Statement

The Privacy Act of 1974 (P.L. 93-579) requires that you be given certain information in connection with your submission of the attached form related to a patent application or patent. Accordingly, pursuant to the requirements of the Act, please be advised that: (1) the general authority for the collection of this information is 35 U.S.C. 2(b)(2); (2) furnishing of the information solicited is voluntary; and (3) the principal purpose for which the information is used by the U.S. Patent and Trademark Office is to process and/or examine your submission related to a patent application or patent. If you do not furnish the requested information, the U.S. Patent and Trademark Office may not be able to process and/or examine your submission, which may result in termination of proceedings or abandonment of the application or expiration of the patent.

The information provided by you in this form will be subject to the following routine uses:

1. The information on this form will be treated confidentially to the extent allowed under the Freedom of Information Act (5 U.S.C. 552) and the Privacy Act (5 U.S.C. 552a). Records from this system of records may be disclosed to the Department of Justice to determine whether the Freedom of Information Act requires disclosure of these records.

2. A record from this system of records may be disclosed, as a routine use, in the course of presenting evidence to a court, magistrate, or administrative tribunal, including disclosures to opposing counsel in the course of settlement negotiations.

3. A record in this system of records may be disclosed, as a routine use, to a Member of Congress submitting a request involving an individual, to whom the record pertains, when the individual has requested assistance from the Member with respect to the subject matter of the record.

4. A record in this system of records may be disclosed, as a routine use, to a contractor of the Agency having need for the information in order to perform a contract. Recipients of information shall be required to comply with the requirements of the Privacy Act of 1974, as amended, pursuant to 5 U.S.C. 552a(m).

5. A record related to an International Application filed under the Patent Cooperation Treaty in this system of records may be disclosed, as a routine use, to the International Bureau of the World Intellectual Property Organization, pursuant to the Patent Cooperation Treaty.

6. A record in this system of records may be disclosed, as a routine use, to another federal agency for purposes of National Security review (35 U.S.C. 181) and for review pursuant to the Atomic Energy Act (42 U.S.C. 218(c)).

7. A record from this system of records may be disclosed, as a routine use, to the Administrator, General Services, or his/her designee, during an inspection of records conducted by GSA as part of that agency's responsibility to recommend improvements in records management practices and programs, under authority of 44 U.S.C. 2904 and 2906. Such disclosure shall be made in accordance with the GSA regulations governing inspection of records for this purpose, and any other relevant (i.e., GSA or Commerce) directive. Such disclosure shall not be used to make determinations about individuals.

8. A record from this system of records may be disclosed, as a routine use, to the public after either publication of the application pursuant to 35 U.S.C. 122(b) or issuance of a patent pursuant to 35 U.S.C. 151. Further, a record may be disclosed, subject to the limitations of 37 CFR 1.14, as a routine use, to the public if the record was filed in an application which became abandoned or in which the proceedings were terminated and which application is referenced by either a published application, an application open to public inspections or an issued patent.

9. A record from this system of records may be disclosed, as a routine use, to a Federal, State, or local law enforcement agency, if the USPTO becomes aware of a violation or potential violation of law or regulation.

UNITED STATES PATENT AND TRADEMARK OFFICE

Commissioner for Patents
United States Patent and Trademark Office
P.O. Box 1450
Alexandria, VA 22313-1450
www.uspto.gov

In re Patent No. 6463713
Issue Date: October 15,2002
Application No. 09412580
Filed: October 5,1999
Attorney Docket No. 4898

:
:DECISION GRANTING PETITION
:UNDER 37 CFR 1.378(c)
:

This is a decision on the electronic petition, filed January 10,2011 ,under 37 CFR 1.378(c) to accept the unintentionally delayed payment of the 7.5 year maintenance fee for the above-identified patent.

The petition is **GRANTED**.

The maintenance fee is accepted, and the above-identified patent reinstated as of January 10,2011
This decision also constitutes notice that the fee has been accepted. An electronic copy of the petition and this decision has been created as an entry in the Image File Wrapper. Nevertheless, petitioner should print and retain an independent copy.

Telephone inquiries related to this electronic decision should be directed to the Electronic Business Center at 1-866-217-9197.

UNITED STATES PATENT AND TRADEMARK OFFICE

Commissioner for Patents
United States Patent and Trademark Office
P.O. Box 1450
Alexandria, VA 22313-1450
www.uspto.gov

MAILED

FEB 23 2012

OFFICE OF PETITIONS

PEARL COHEN ZEDEK LATZER, LLP
1500 BROADWAY
12TH FLOOR
NEW YORK NY 10036

In re Patent No. 6,658,314 :
Issued: December 2, 2003 :
Application No. 09/412,618 : ON PETITION
Filed: October 6, 1999 :
Attorney Docket No: P-2070-US

This is a decision regarding your request under 37 CFR 1.28. for acceptance of a fee deficiency submission and loss of small entity status filed January 23, 2012.

On September 1, 1998, the Court of Appeals for the Federal Circuit held that 37 CFR 1.28(c) is the sole provision governing the time for correction of the erroneous payment of the issue fee as a small entity. See DH Technology v. Synergystex International, Inc.. 154 F.33d 1333, 47 USPQ2d 1865 (Fed. Cir. Sept. 1, 1998).

The Office no longer investigates or rejects original or reissue applications under 37 CFR 1.56. 1098 Off. Gaz. Pat. Office 502 (January 3, 1989). Therefore nothing in this Notice is intended to imply that an investigation was done.

Your fee deficiency submission in the amount of $1610(charged to deposit account no. 50-3355) under 37 CFR 1.28, is hereby accepted and the petition is **GRANTED**. Status as a small entity has also been removed.

Inquiries related to this communication should be directed to the Office of Petitions Staff at (571) 272-3282.

Patricia Faison-Ball

Patricia Faison-Ball
Senior Petitions Attorney
Office of Petitions

PTO/SB/66 (03-09)
Approved for use through 03/31/2012. OMB 0651-0016
U.S. Patent and Trademark Office: U.S. DEPARTMENT OF COMMERCE
Under the Paperwork Reduction Act of 1995, no persons are required to respond to a collection of information unless it displays valid OMB control number.

PETITION TO ACCEPT UNINTENTIONALLY DELAYED PAYMENT OF MAINTENANCE FEE IN AN EXPIRED PATENT (37 CFR 1.378(c))

Patent Number	Issue Date (YYYY-MM-DD)	Application Number	Filing Date (YYYY-MM-DD)	Docket Number (if applicable)
6434524	2002-08-13	09412929	1999-10-05	PM261640

CAUTION: Maintenance fee (and surcharge, if any) payment must correctly identify: (1) the patent number and (2) the application number of the actual U.S. application leading to issuance of that patent to ensure the fee(s) is/are associated with the correct patent. 37 CFR 1.366(c) and (d).

SMALL ENTITY

☒ Patentee claims, or has previously claimed, small entity status. See 37 CFR 1.27.

LOSS OF ENTITLEMENT TO SMALL ENTITY STATUS

☐ Patentee is no longer entitled to small entity status. See 37 CFR 1.27(g)

NOT Small Entity	Fee	Code	Small Entity	Fee	Code
○	3 ½ year	(1551)	○	3 ½ year	(2551)
○	7 ½ year	(1552)	◉	7 ½ year	(2552)
○	11 ½ year	(1553)	○	11 ½ year	(2553)

SURCHARGE

The surcharge required by 37 CFR 1.20(i)(2) (Fee Code 1558) must be paid as a condition of accepting unintentionally delayed payment of the maintenance fee.

MAINTENANCE FEE (37 CFR 1.20(e)-(g))

The appropriate maintenance fee must be submitted with this petition.

STATEMENT

THE UNDERSIGNED CERTIFIES THAT THE DELAY IN PAYMENT OF THE MAINTENANCE FEE TO THIS PATENT WAS UNINTENTIONAL

PETITIONER(S) REQUEST THAT THE DELAYED PAYMENT OF THE MAINTENANCE FEE BE ACCEPTED AND THE PATENT REINSTATED

THIS PORTION MUST BE COMPLETED BY THE SIGNATORY OR SIGNATORIES

37 CFR 1.378(d) states: "Any petition under this section must be signed by an attorney or agent registered to practice before the Patent and Trademark Office, or by the patentee, the assignee, or other party in interest."

I certify, in accordance with 37 CFR 1.4(d)(4) that I am

◉ An attorney or agent registered to practice before the Patent and Trademark Office

○ A sole patentee

○ A joint patentee; I certify that I am authorized to sign this submission on behalf of all the other patentees.

○ A joint patentee; all of whom are signing this e-petition

○ The assignee of record of the entire interest

PTO/SB/66 (03-09)
Approved for use through 03/31/2012. OMB 0651-0016
U.S. Patent and Trademark Office: U.S. DEPARTMENT OF COMMERCE
Under the Paperwork Reduction Act of 1995, no persons are required to respond to a collection of information unless it displays valid OMB control number.

Patent Practitioner			
A signature of the applicant or representative is required in accordance with 37 CFR 1.33 and 10.18. Please see 37 CFR 1.4(d) for the form of the signature			
Signature	/Kendal M. Sheets/	Date (YYYY-MM-DD)	2010-11-03
Name	Kendal M. Sheets	Registration Number	47077

This collection of information is required by 37 CFR 1.378(c). The information is required to obtain or retain a benefit by the public which is to file (and by the USPTO to process) an application. Confidentiality is governed by 35 U.S.C. 122 and 37 CFR 1.11 and 1.14. This collection is estimated to take 1 hour to complete, including gathering, preparing, and submitting the completed application form to the USPTO. Time will vary depending upon the individual case. Any comments on the amount of time you require to complete this form and/ or suggestions for reducing this burden, should be sent to the Chief Information Officer, U.S. Patent and Trademark Office, U.S. Department of Commerce, P.O. Box 1450, Alexandria, VA 22313-1450. DO NOT SEND FEES OR COMPLETED FORMS TO THIS ADDRESS. **This form can only be used when in conjunction with EFS-Web. If this form is mailed to the USPTO, it may cause delays in reinstating the patent.**

Privacy Act Statement

The Privacy Act of 1974 (P.L. 93-579) requires that you be given certain information in connection with your submission of the attached form related to a patent application or patent. Accordingly, pursuant to the requirements of the Act, please be advised that: (1) the general authority for the collection of this information is 35 U.S.C. 2(b)(2); (2) furnishing of the information solicited is voluntary; and (3) the principal purpose for which the information is used by the U.S. Patent and Trademark Office is to process and/or examine your submission related to a patent application or patent. If you do not furnish the requested information, the U.S. Patent and Trademark Office may not be able to process and/or examine your submission, which may result in termination of proceedings or abandonment of the application or expiration of the patent.

The information provided by you in this form will be subject to the following routine uses:

1. The information on this form will be treated confidentially to the extent allowed under the Freedom of Information Act (5 U.S.C. 552) and the Privacy Act (5 U.S.C. 552a). Records from this system of records may be disclosed to the Department of Justice to determine whether the Freedom of Information Act requires disclosure of these records.

2. A record from this system of records may be disclosed, as a routine use, in the course of presenting evidence to a court, magistrate, or administrative tribunal, including disclosures to opposing counsel in the course of settlement negotiations.

3. A record in this system of records may be disclosed, as a routine use, to a Member of Congress submitting a request involving an individual, to whom the record pertains, when the individual has requested assistance from the Member with respect to the subject matter of the record.

4. A record in this system of records may be disclosed, as a routine use, to a contractor of the Agency having need for the information in order to perform a contract. Recipients of information shall be required to comply with the requirements of the Privacy Act of 1974, as amended, pursuant to 5 U.S.C. 552a(m).

5. A record related to an International Application filed under the Patent Cooperation Treaty in this system of records may be disclosed, as a routine use, to the International Bureau of the World Intellectual Property Organization, pursuant to the Patent Cooperation Treaty.

6. A record in this system of records may be disclosed, as a routine use, to another federal agency for purposes of National Security review (35 U.S.C. 181) and for review pursuant to the Atomic Energy Act (42 U.S.C. 218(c)).

7. A record from this system of records may be disclosed, as a routine use, to the Administrator, General Services, or his/her designee, during an inspection of records conducted by GSA as part of that agency's responsibility to recommend improvements in records management practices and programs, under authority of 44 U.S.C. 2904 and 2906. Such disclosure shall be made in accordance with the GSA regulations governing inspection of records for this purpose, and any other relevant (i.e., GSA or Commerce) directive. Such disclosure shall not be used to make determinations about individuals.

8. A record from this system of records may be disclosed, as a routine use, to the public after either publication of the application pursuant to 35 U.S.C. 122(b) or issuance of a patent pursuant to 35 U.S.C. 151. Further, a record may be disclosed, subject to the limitations of 37 CFR 1.14, as a routine use, to the public if the record was filed in an application which became abandoned or in which the proceedings were terminated and which application is referenced by either a published application, an application open to public inspections or an issued patent.

9. A record from this system of records may be disclosed, as a routine use, to a Federal, State, or local law enforcement agency, if the USPTO becomes aware of a violation or potential violation of law or regulation.

UNITED STATES PATENT AND TRADEMARK OFFICE

Commissioner for Patents
United States Patent and Trademark Office
P.O. Box 1450
Alexandria, VA 22313-1450
www.uspto.gov

In re Patent No. 6434524
Issue Date: August 13,2002
Application No. 09412929
Filed: October 5,1999
Attorney Docket No. PM261640

:
:DECISION GRANTING PETITION
:UNDER 37 CFR 1.378(c)
:

This is a decision on the electronic petition, filed November 3,2010 ,under 37 CFR 1.378(c) to accept the unintentionally delayed payment of the 7.5 year maintenance fee for the above-identified patent.

The petition is **GRANTED**.

The maintenance fee is accepted, and the above-identified patent reinstated as of November 3,2010 . This decision also constitutes notice that the fee has been accepted. An electronic copy of the petition and this decision has been created as an entry in the Image File Wrapper. Nevertheless, petitioner should print and retain an independent copy.

Telephone inquiries related to this electronic decision should be directed to the Electronic Business Center at 1-866-217-9197.

PTO/SB/66 (03-09)
Approved for use through 03/31/2012. OMB 0651-0016
U.S. Patent and Trademark Office: U.S. DEPARTMENT OF COMMERCE
Under the Paperwork Reduction Act of 1995, no persons are required to respond to a collection of information unless it displays valid OMB control number.

PETITION TO ACCEPT UNINTENTIONALLY DELAYED PAYMENT OF MAINTENANCE FEE IN AN EXPIRED PATENT (37 CFR 1.378(c))

Patent Number	Issue Date (YYYY-MM-DD)	Application Number	Filing Date (YYYY-MM-DD)	Docket Number (if applicable)
6,354,616	2002-03-12	09/413,338	1999-10-12	

CAUTION: Maintenance fee (and surcharge, if any) payment must correctly identify: (1) the patent number and (2) the application number of the actual U.S. application leading to issuance of that patent to ensure the fee(s) is/are associated with the correct patent. 37 CFR 1.366(c) and (d).

SMALL ENTITY

☒ Patentee claims, or has previously claimed, small entity status. See 37 CFR 1.27.

LOSS OF ENTITLEMENT TO SMALL ENTITY STATUS

☐ Patentee is no longer entitled to small entity status. See 37 CFR 1.27(g)

NOT Small Entity			Small Entity		
	Fee	Code		Fee	Code
○	3 ½ year	(1551)	○	3 ½ year	(2551)
○	7 ½ year	(1552)	◉	7 ½ year	(2552)
○	11 ½ year	(1553)	○	11 ½ year	(2553)

SURCHARGE

The surcharge required by 37 CFR 1.20(i)(2) (Fee Code 1558) must be paid as a condition of accepting unintentionally delayed payment of the maintenance fee.

MAINTENANCE FEE (37 CFR 1.20(e)-(g))

The appropriate maintenance fee must be submitted with this petition.

STATEMENT

THE UNDERSIGNED CERTIFIES THAT THE DELAY IN PAYMENT OF THE MAINTENANCE FEE TO THIS PATENT WAS UNINTENTIONAL

PETITIONER(S) REQUEST THAT THE DELAYED PAYMENT OF THE MAINTENANCE FEE BE ACCEPTED AND THE PATENT REINSTATED

THIS PORTION MUST BE COMPLETED BY THE SIGNATORY OR SIGNATORIES

37 CFR 1.378(d) states: "Any petition under this section must be signed by an attorney or agent registered to practice before the Patent and Trademark Office, or by the patentee, the assignee, or other party in interest."

I certify, in accordance with 37 CFR 1.4(d)(4) that I am

◉ An attorney or agent registered to practice before the Patent and Trademark Office

○ A sole patentee

○ A joint patentee; I certify that I am authorized to sign this submission on behalf of all the other patentees.

○ A joint patentee; all of whom are signing this e-petition

○ The assignee of record of the entire interest

PTO/SB/66 (03-09)
Approved for use through 03/31/2012. OMB 0651-0016
U.S. Patent and Trademark Office: U.S. DEPARTMENT OF COMMERCE
Under the Paperwork Reduction Act of 1995, no persons are required to respond to a collection of information unless it displays valid OMB control number.

Patent Practitioner			
A signature of the applicant or representative is required in accordance with 37 CFR 1.33 and 10.18. Please see 37 CFR 1.4(d) for the form of the signature			
Signature	//Donald E. Hasse//	Date (YYYY-MM-DD)	2010-08-31
Name	Donald E. Hasse	Registration Number	29387

This collection of information is required by 37 CFR 1.378(c). The information is required to obtain or retain a benefit by the public which is to file (and by the USPTO to process) an application. Confidentiality is governed by 35 U.S.C. 122 and 37 CFR 1.11 and 1.14. This collection is estimated to take 1 hour to complete, including gathering, preparing, and submitting the completed application form to the USPTO. Time will vary depending upon the individual case. Any comments on the amount of time you require to complete this form and/ or suggestions for reducing this burden, should be sent to the Chief Information Officer, U.S. Patent and Trademark Office, U.S. Department of Commerce, P.O. Box 1450, Alexandria, VA 22313-1450. DO NOT SEND FEES OR COMPLETED FORMS TO THIS ADDRESS. **This form can only be used when in conjunction with EFS-Web. If this form is mailed to the USPTO, it may cause delays in reinstating the patent.**

Privacy Act Statement

The Privacy Act of 1974 (P.L. 93-579) requires that you be given certain information in connection with your submission of the attached form related to a patent application or patent. Accordingly, pursuant to the requirements of the Act, please be advised that: (1) the general authority for the collection of this information is 35 U.S.C. 2(b)(2); (2) furnishing of the information solicited is voluntary; and (3) the principal purpose for which the information is used by the U.S. Patent and Trademark Office is to process and/or examine your submission related to a patent application or patent. If you do not furnish the requested information, the U.S. Patent and Trademark Office may not be able to process and/or examine your submission, which may result in termination of proceedings or abandonment of the application or expiration of the patent.

The information provided by you in this form will be subject to the following routine uses:

1. The information on this form will be treated confidentially to the extent allowed under the Freedom of Information Act (5 U.S.C. 552) and the Privacy Act (5 U.S.C. 552a). Records from this system of records may be disclosed to the Department of Justice to determine whether the Freedom of Information Act requires disclosure of these records.

2. A record from this system of records may be disclosed, as a routine use, in the course of presenting evidence to a court, magistrate, or administrative tribunal, including disclosures to opposing counsel in the course of settlement negotiations.

3. A record in this system of records may be disclosed, as a routine use, to a Member of Congress submitting a request involving an individual, to whom the record pertains, when the individual has requested assistance from the Member with respect to the subject matter of the record.

4. A record in this system of records may be disclosed, as a routine use, to a contractor of the Agency having need for the information in order to perform a contract. Recipients of information shall be required to comply with the requirements of the Privacy Act of 1974, as amended, pursuant to 5 U.S.C. 552a(m).

5. A record related to an International Application filed under the Patent Cooperation Treaty in this system of records may be disclosed, as a routine use, to the International Bureau of the World Intellectual Property Organization, pursuant to the Patent Cooperation Treaty.

6. A record in this system of records may be disclosed, as a routine use, to another federal agency for purposes of National Security review (35 U.S.C. 181) and for review pursuant to the Atomic Energy Act (42 U.S.C. 218(c)).

7. A record from this system of records may be disclosed, as a routine use, to the Administrator, General Services, or his/her designee, during an inspection of records conducted by GSA as part of that agency's responsibility to recommend improvements in records management practices and programs, under authority of 44 U.S.C. 2904 and 2906. Such disclosure shall be made in accordance with the GSA regulations governing inspection of records for this purpose, and any other relevant (i.e., GSA or Commerce) directive. Such disclosure shall not be used to make determinations about individuals.

8. A record from this system of records may be disclosed, as a routine use, to the public after either publication of the application pursuant to 35 U.S.C. 122(b) or issuance of a patent pursuant to 35 U.S.C. 151. Further, a record may be disclosed, subject to the limitations of 37 CFR 1.14, as a routine use, to the public if the record was filed in an application which became abandoned or in which the proceedings were terminated and which application is referenced by either a published application, an application open to public inspections or an issued patent.

9. A record from this system of records may be disclosed, as a routine use, to a Federal, State, or local law enforcement agency, if the USPTO becomes aware of a violation or potential violation of law or regulation.

UNITED STATES PATENT AND TRADEMARK OFFICE

Commissioner for Patents
United States Patent and Trademark Office
P.O. Box 1450
Alexandria, VA 22313-1450
www.uspto.gov

In re Patent No. 6354616
Issue Date: March 12,2002
Application No. 09413338
Filed: October 12,1999
Attorney Docket No. BHT/3136/2

:
:DECISION GRANTING PETITION
:UNDER 37 CFR 1.378(c)
:

This is a decision on the electronic petition, filed August 31,2010 ,under 37 CFR 1.378(c) to accept the unintentionally delayed payment of the 7.5 year maintenance fee for the above-identified patent.

The petition is **GRANTED**.

The maintenance fee is accepted, and the above-identified patent reinstated as of August 31,2010 . This decision also constitutes notice that the fee has been accepted. An electronic copy of the petition and this decision has been created as an entry in the Image File Wrapper. Nevertheless, petitioner should print and retain an independent copy.

Telephone inquiries related to this electronic decision should be directed to the Electronic Business Center at 1-866-217-9197.

PTO/SB/66 (03-09)
Approved for use through 03/31/2012. OMB 0651-0016
U.S. Patent and Trademark Office: U.S. DEPARTMENT OF COMMERCE
Under the Paperwork Reduction Act of 1995, no persons are required to respond to a collection of information unless it displays valid OMB control number.

PETITION TO ACCEPT UNINTENTIONALLY DELAYED PAYMENT OF MAINTENANCE FEE IN AN EXPIRED PATENT (37 CFR 1.378(c))

Patent Number	Issue Date (YYYY-MM-DD)	Application Number	Filing Date (YYYY-MM-DD)	Docket Number (if applicable)
6621526	2003-09-16	09413804	1999-10-07	

CAUTION: Maintenance fee (and surcharge, if any) payment must correctly identify: (1) the patent number and (2) the application number of the actual U.S. application leading to issuance of that patent to ensure the fee(s) is/are associated with the correct patent. 37 CFR 1.366(c) and (d).

SMALL ENTITY

☐ Patentee claims, or has previously claimed, small entity status. See 37 CFR 1.27.

LOSS OF ENTITLEMENT TO SMALL ENTITY STATUS

☐ Patentee is no longer entitled to small entity status. See 37 CFR 1.27(g)

NOT Small Entity			Small Entity		
	Fee	Code		Fee	Code
○	3 ½ year	(1551)	○	3 ½ year	(2551)
◉	7 ½ year	(1552)	○	7 ½ year	(2552)
○	11 ½ year	(1553)	○	11 ½ year	(2553)

SURCHARGE

The surcharge required by 37 CFR 1.20(i)(2) (Fee Code 1558) must be paid as a condition of accepting unintentionally delayed payment of the maintenance fee.

MAINTENANCE FEE (37 CFR 1.20(e)-(g))

The appropriate maintenance fee must be submitted with this petition.

STATEMENT

THE UNDERSIGNED CERTIFIES THAT THE DELAY IN PAYMENT OF THE MAINTENANCE FEE TO THIS PATENT WAS UNINTENTIONAL

PETITIONER(S) REQUEST THAT THE DELAYED PAYMENT OF THE MAINTENANCE FEE BE ACCEPTED AND THE PATENT REINSTATED

THIS PORTION MUST BE COMPLETED BY THE SIGNATORY OR SIGNATORIES

37 CFR 1.378(d) states: "Any petition under this section must be signed by an attorney or agent registered to practice before the Patent and Trademark Office, or by the patentee, the assignee, or other party in interest."

I certify, in accordance with 37 CFR 1.4(d)(4) that I am

◉ An attorney or agent registered to practice before the Patent and Trademark Office

○ A sole patentee

○ A joint patentee; I certify that I am authorized to sign this submission on behalf of all the other patentees.

○ A joint patentee; all of whom are signing this e-petition

○ The assignee of record of the entire interest

PTO/SB/66 (03-09)
Approved for use through 03/31/2012. OMB 0651-0016
U.S. Patent and Trademark Office: U.S. DEPARTMENT OF COMMERCE
Under the Paperwork Reduction Act of 1995, no persons are required to respond to a collection of information unless it displays valid OMB control number.

Patent Practitioner			
A signature of the applicant or representative is required in accordance with 37 CFR 1.33 and 10.18. Please see 37 CFR 1.4(d) for the form of the signature			
Signature	/Marvin Motsenbocker/	Date (YYYY-MM-DD)	2012-03-23
Name	Marvin A. Motsenbocker	Registration Number	36614

This collection of information is required by 37 CFR 1.378(c). The information is required to obtain or retain a benefit by the public which is to file (and by the USPTO to process) an application. Confidentiality is governed by 35 U.S.C. 122 and 37 CFR 1.11 and 1.14. This collection is estimated to take 1 hour to complete, including gathering, preparing, and submitting the completed application form to the USPTO. Time will vary depending upon the individual case. Any comments on the amount of time you require to complete this form and/ or suggestions for reducing this burden, should be sent to the Chief Information Officer, U.S. Patent and Trademark Office, U.S. Department of Commerce, P.O. Box 1450, Alexandria, VA 22313-1450. DO NOT SEND FEES OR COMPLETED FORMS TO THIS ADDRESS. **This form can only be used when in conjunction with EFS-Web. If this form is mailed to the USPTO, it may cause delays in reinstating the patent.**

Privacy Act Statement

The Privacy Act of 1974 (P.L. 93-579) requires that you be given certain information in connection with your submission of the attached form related to a patent application or patent. Accordingly, pursuant to the requirements of the Act, please be advised that: (1) the general authority for the collection of this information is 35 U.S.C. 2(b)(2); (2) furnishing of the information solicited is voluntary; and (3) the principal purpose for which the information is used by the U.S. Patent and Trademark Office is to process and/or examine your submission related to a patent application or patent. If you do not furnish the requested information, the U.S. Patent and Trademark Office may not be able to process and/or examine your submission, which may result in termination of proceedings or abandonment of the application or expiration of the patent.

The information provided by you in this form will be subject to the following routine uses:

1. The information on this form will be treated confidentially to the extent allowed under the Freedom of Information Act (5 U.S.C. 552) and the Privacy Act (5 U.S.C. 552a). Records from this system of records may be disclosed to the Department of Justice to determine whether the Freedom of Information Act requires disclosure of these records.

2. A record from this system of records may be disclosed, as a routine use, in the course of presenting evidence to a court, magistrate, or administrative tribunal, including disclosures to opposing counsel in the course of settlement negotiations.

3. A record in this system of records may be disclosed, as a routine use, to a Member of Congress submitting a request involving an individual, to whom the record pertains, when the individual has requested assistance from the Member with respect to the subject matter of the record.

4. A record in this system of records may be disclosed, as a routine use, to a contractor of the Agency having need for the information in order to perform a contract. Recipients of information shall be required to comply with the requirements of the Privacy Act of 1974, as amended, pursuant to 5 U.S.C. 552a(m).

5. A record related to an International Application filed under the Patent Cooperation Treaty in this system of records may be disclosed, as a routine use, to the International Bureau of the World Intellectual Property Organization, pursuant to the Patent Cooperation Treaty.

6. A record in this system of records may be disclosed, as a routine use, to another federal agency for purposes of National Security review (35 U.S.C. 181) and for review pursuant to the Atomic Energy Act (42 U.S.C. 218(c)).

7. A record from this system of records may be disclosed, as a routine use, to the Administrator, General Services, or his/her designee, during an inspection of records conducted by GSA as part of that agency's responsibility to recommend improvements in records management practices and programs, under authority of 44 U.S.C. 2904 and 2906. Such disclosure shall be made in accordance with the GSA regulations governing inspection of records for this purpose, and any other relevant (i.e., GSA or Commerce) directive. Such disclosure shall not be used to make determinations about individuals.

8. A record from this system of records may be disclosed, as a routine use, to the public after either publication of the application pursuant to 35 U.S.C. 122(b) or issuance of a patent pursuant to 35 U.S.C. 151. Further, a record may be disclosed, subject to the limitations of 37 CFR 1.14, as a routine use, to the public if the record was filed in an application which became abandoned or in which the proceedings were terminated and which application is referenced by either a published application, an application open to public inspections or an issued patent.

9. A record from this system of records may be disclosed, as a routine use, to a Federal, State, or local law enforcement agency, if the USPTO becomes aware of a violation or potential violation of law or regulation.

UNITED STATES PATENT AND TRADEMARK OFFICE

Commissioner for Patents
United States Patent and Trademark Office
P.O. Box 1450
Alexandria, VA 22313-1450
www.uspto.gov

In re Patent No. 6621526
Issue Date: September 16,2003
Application No. 09413804
Filed: October 7,1999
Attorney Docket No. 0102/0079

: DECISION GRANTING PETITION
: UNDER 37 CFR 1.378(c)

This is a decision on the electronic petition, filed March 23,2012 ,under 37 CFR 1.378(c) to accept the unintentionally delayed payment of the 7.5 year maintenance fee for the above-identified patent.

The petition is **GRANTED**.

The maintenance fee is accepted, and the above-identified patent reinstated as of March 23,2012 . This decision also constitutes notice that the fee has been accepted. An electronic copy of the petition and this decision has been created as an entry in the Image File Wrapper. Nevertheless, petitioner should print and retain an independent copy.

Telephone inquiries related to this electronic decision should be directed to the Electronic Business Center at 1-866-217-9197.

UNITED STATES PATENT AND TRADEMARK OFFICE

Commissioner for Patents
United States Patent and Trademark Office
P.O. Box 1450
Alexandria, VA 22313-1450
www.uspto.gov

POLSTER, LIEDER, WOODRUFF
LUCCHESI, L.C.
12412 POWERSCOURT DR.
SUITE 200
ST. LOUIS MO 63131-3615

MAILED
NOV 01 2011
OFFICE OF PETITIONS

In re Patent No. 6,393,971	:	
Issue Date: May 28, 2002	:	
Application No. 09/414,785	:	NOTICE
Filed: October 8, 1999	:	
Attorney Docket No. 7344	:	

This is a notice regarding your request for acceptance of a fee deficiency submission under 37 CFR 1.28. On September 1, 1998, the Court of Appeals for the Federal Circuit held that 37 CFR 1.28(c) is the sole provision governing the time for correction of the erroneous payment of the issue fee as a small entity. **See DH Technology v. Synergystex International, Inc. 154 F.3d 1333, 47 USPQ2d 1865 (Fed. Cir. Sept. 1, 1998).**

The Office no longer investigates or rejects original or reissue applications under 37 CFR 1.56. **1098 Off. Gaz. Pat. Office 502 (January 3, 1989)**. Therefore, nothing in this Notice is intended to imply that an investigation was done.

Your fee deficiency submission under 37 CFR 1.28 is hereby **ACCEPTED**.

This application is no longer entitled to small entity status. Accordingly, all future fees paid in this application must be paid at the large entity rate.

Inquiries related to this communication should be directed to Diane Goodwyn at (571) 272-6735.

Thurman K. Page
Petitions Examiner
Office of Petitions

UNITED STATES PATENT AND TRADEMARK OFFICE

Commissioner for Patents
United States Patent and Trademark Office
P.O. Box 1450
Alexandria, VA 22313-1450
www.uspto.gov

MAILED
MAR 20 2012
OFFICE OF PETITIONS

POLSTER, LIEDER, WOODRUFF & LUCCHESI, L.C.
12412 POWERSCOURT DR.
SUITE 200
ST. LOUIS MO 63131-3615

In re Patent No. 6,393,971
Issue Date: May 28, 2002
Application No. 09/414,785
Filed: October 8, 1999
Attorney Docket No. 7344

: DECISION ON REQUEST FOR REFUND

This is a decision on the Request For Refund filed, February 27, 2012.

The request is **GRANTED**.

Applicant files the above request for refund and states that "On September 23, 2011, we faxed an Entity Status Change Form and a Petition authorizing the USPTO to charge the top up for a maintenance fee that was paid as a small entity on November 30, 2009 in the amount of $1,240 since this patent now qualifies as a large entity."

Applicant further states that "On the October 2011 Deposit Account Statement (copy attached), the USPTO charged the account $1,240 under Fee Code 1599. Then, on the November 2011 Deposit Account Statement (copy attached), the USPTO refunded the top up fee in the amount of $1,240 under Fee Code 1599 and then re-charged $2,480 under Fee Code 1552; however, this amount is the entire amount for the maintenance fee for a large entity. Therefore, the USPTO should have only re-charged $1,240 as the top up maintenance fee under Fee Code 1552."

In view of the above, a refund of $1,240 is being credited to applicant's deposit account, as it is the method in which the fee was paid.

Any questions concerning this matter may be directed to Diane Goodwyn at (571) 272-6735.

/KOC/
Karen Creasy
Petitions Examiner
Office of Petitions

UNITED STATES PATENT AND TRADEMARK OFFICE

Commissioner for Patents
United States Patent and Trademark Office
P.O. Box 1450
Alexandria, VA 22313-1450
www.uspto.gov

Paper No. 12

OBLON, SPIVAK, MCCLELLAND MAIER & NEUSTADT, L.L.P.
1940 DUKE STREET
ALEXANDRIA VA 22314

MAILED
MAR 23 2012
OFFICE OF PETITIONS

In re Patent No. 6,158,725 :
Issue Date: 12/12/2000 :
Application Number: 09/414,856 : NOTICE
Filing or 371(c) Date: 10/12/1999 :
For: DEVICE FOR STORING ENERGY IN SPRING STORAGES :

This letter is in response to the letter filed on February 9, 2012, regarding a previously-filed fee deficiency submission, which is treated under 37 CFR 1.28.[1]

Petitioner has provided a copy of a letter, accompanied by a return receipt postcard dated June 15, 2011, requesting acceptance of a fee deficiency submission under 37 CFR 1.28. The copy of the letter provided, however, is unsigned.

37 CFR 1.33(b) requires that amendments and other papers, except for written assertions pursuant to § 1.27(c)(2)(ii) of this part, filed in the application must be signed by:
(1) A patent practitioner of record appointed in compliance with § 1.32(b);
(2) A patent practitioner not of record who acts in a representative capacity under the provisions of § 1.34;
(3) An assignee as provided for under § 3.71(b) of this chapter; or
(4) All of the applicants (§ 1.41(b)) for patent, unless there is an assignee of the entire interest and such assignee has taken action in the application in accordance with § 3.71 of this chapter.

In this regard, while the letter dated February 10, 2012, stating that small entity status no longer applies to this patent is signed by a registered patent practitioner, a properly-signed statement under 37 CFR 1.28(c) has not been provided.

Any papers filed in the USPTO, including a fee deficiency submission under 37 CFR 1.28, must be signed in accordance with 37 CFR 1.33(b). Accordingly, it is recommended that patentees submit a properly signed request under 37 CFR 1.28.

The Office acknowledges receipt of payment of $1,825.00.

[1] Petitioner has provided an unsigned copy of the previously-filed fee deficiency submission, with a postcard dated June 15, 2011.

Small entity status will no longer apply to this patent.

Inquiries related to this communication should be directed to the undersigned at (571) 272-3231.

D Wood

Douglas Wood
Attorney
Office of Petitions

UNITED STATES PATENT AND TRADEMARK OFFICE

Commissioner for Patents
United States Patent and Trademark Office
P.O. Box 1450
Alexandria, VA 22313-1450
www.uspto.gov

MARK D. LAVENDER
ST. JUDE MEDICAL,
ATRIAL FIBRILLATION DIVISION, INC.
ONE ST. JUDE MEDICAL DRIVE
ST. PAUL, MN 55117-9913

MAILED

JAN 17 2012

OFFICE OF PETITIONS

In re Patent No. 6,267,781 :
Issued: July 31, 2001 :
Application No. 09/414,938 : ON PETITION
Filed: October 9, 1999 :
Attorney Docket No: 0F-044602US :

This is a decision regarding your request under 37 CFR 1.28 for acceptance of a fee deficiency submission filed December 22, 2011.

On September 1, 1998, the Court of Appeals for the Federal Circuit held that 37 CFR 1.28(c) is the sole provision governing the time for correction of the erroneous payment of the issue fee as a small entity. See DH Technology v. Synergystex International, Inc.. 154 F.33d 1333, 47 USPQ2d 1865 (Fed. Cir. Sept. 1, 1998).

The Office no longer investigates or rejects original or reissue applications under 37 CFR 1.56. 1098 Off. Gaz. Pat. Office 502 (January 3, 1989). Therefore nothing in this Notice is intended to imply that an investigation was done.

Finally, there is no indication that petitioner herein was ever empowered to handle matters related to this patent. If petitioner desires to receive future correspondence regarding this patent, the appropriate power of attorney documentation must be submitted. If the new power of attorney and/or change of address is signed by an assignee, the assignee must comply with the requirements of 37 CFR 3.73(b). This decision will be mailed to petitioner, however, all future correspondence will be mailed solely to the correspondence address of record. If petitioner desires to receive future correspondence regarding any Maintenance Fee Reminder which **may** be mailed concerning this patent, a Fee Address should be submitted to Maintenance Fee Division.

Your fee deficiency submission in the amount of $660, under 37 CFR 1.28, is hereby accepted and the petition is **GRANTED**.

Inquiries related to this communication should be directed to the Office of Petitions Staff at (571) 272-3282.

/Patricia Faison-Ball/

Patricia Faison-Ball
Senior Petitions Attorney
Office of Petitions

SPE RESPONSE FOR CERTIFICATE OF CORRECTION

Paper No.: _____

DATE : 05/20/11

TO SPE OF : ART UNIT 2164

SUBJECT : Request for Certificate of Correction for Appl. No.: 09/414,992 Patent No.: 6546393

CofC mailroom date: 03/02/11

Please respond to this request for a certificate of correction within 7 days.

FOR IFW FILES:

Please review the requested changes/corrections as shown in the **COCIN** document(s) in the IFW application image. No new matter should be introduced, nor should the scope or meaning of the claims be changed.

Please complete the response (see below) and forward the completed response to scanning using document code **COCX**.

FOR PAPER FILES:

Please review the requested changes/corrections as shown in the attached certificate of correction. Please complete this form (see below) and forward it with the file to:

Certificates of Correction Branch (CofC)
Randolph Square – 9D10-A
Palm Location 7580

RoChaun Johnson
Certificates of Correction Branch
703-756-1580

Thank You For Your Assistance

The request for issuing the above-identified correction(s) is hereby:
Note your decision on the appropriate box.

- ☐ **Approved** — **All** changes apply.
- ☐ **Approved in Part** — Specify below which changes **do not** apply.
- ☒ **Denied** — State the reasons for denial below.

Comments: Changes the scope of the claims

C. Jones
SPE

2164
Art Unit

Claims 1-20 are presented replacing previous 1-20 patented

1. **changed** (independent, limitation a-d same, limitations e-; have been replaced with new e-g incorporating features from old dependent claim 8, still narrow but different from previous version, the features are now consistent with other independent claims)

2. unchanged

3. unchanged

4. unchanged

5. unchanged

6. unchanged

7. unchanged

8. **changed** (independent, previously dependent claim 8 changed to independent claim 8 having features a-j, narrow)

9. unchanged (dependency changed)

10. **changed** (dependent claim, **new limitation**)

11. **changed** (previously dependent claim 10)

12. **changed** (previously dependent claim 11, dependency changed)

13. **changed** (limitation unchanged, dependency changed)

14. **changed** (previously dependent claim 12, dependency changed)

15. **changed** (previously dependent claim 14, dependency changed)

16. **changed** (changed from independent to dependent, previously dependent claim 15, dependency changed)

17. unchanged (independent claim)

18. unchanged (dependent claim)

19. unchanged (independent claim)

20. **changed** (independent, previously dependent claim changed to independent claim having features a-o, **the narrowest independent, previously independent claim 16**)

Overall the change probably can be approved

UNITED STATES PATENT AND TRADEMARK OFFICE
CERTIFICATE OF CORRECTION

PATENT NO.:

DATED:

INVENTOR(S):

It is certified that error appears in the above-identified patent and that said Letters Patent is hereby corrected as shown below:

SPE RESPONSE FOR CERTIFICATE OF CORRECTION

Paper No.: _____

DATE : 05/20/11

TO SPE OF : ART UNIT 2164

SUBJECT : Request for Certificate of Correction for Appl. No.: 09/414,992 Patent No.: 6546393

CofC mailroom date: 03/02/11

Please respond to this request for a certificate of correction within 7 days.

FOR IFW FILES:

Please review the requested changes/corrections as shown in the **COCIN** document(s) in the IFW application image. No new matter should be introduced, nor should the scope or meaning of the claims be changed.

Please complete the response (see below) and forward the completed response to scanning using document code **COCX**.

FOR PAPER FILES:

Please review the requested changes/corrections as shown in the attached certificate of correction. Please complete this form (see below) and forward it with the file to:

Certificates of Correction Branch (CofC)
Randolph Square – 9D10-A
Palm Location 7580

RoChaun Johnson
Certificates of Correction Branch
703-756-1580

Thank You For Your Assistance

The request for issuing the above-identified correction(s) is hereby:
Note your decision on the appropriate box.

- ☐ **Approved** — **All** changes apply.
- ☐ **Approved in Part** — Specify below which changes **do not** apply.
- ☒ **Denied** — State the reasons for denial below.

Comments: Claim 10 is a new limitation and the scope of claim 1 was changed.

/Charles Rones/

SPE 2164 **Art Unit**

SPE RESPONSE FOR CERTIFICATE OF CORRECTION

Paper No.: _____

DATE : 05/20/11

TO SPE OF : ART UNIT 2164

SUBJECT : Request for Certificate of Correction for Appl. No.: 09/414,992 Patent No.: 6546393

CofC mailroom date: 03/02/11

Please respond to this request for a certificate of correction within 7 days.

FOR IFW FILES:

Please review the requested changes/corrections as shown in the **COCIN** document(s) in the IFW application image. No new matter should be introduced, nor should the scope or meaning of the claims be changed.

Please complete the response (see below) and forward the completed response to scanning using document code **COCX**.

FOR PAPER FILES:

Please review the requested changes/corrections as shown in the attached certificate of correction. Please complete this form (see below) and forward it with the file to:

Certificates of Correction Branch (CofC)
Randolph Square – 9D10-A
Palm Location 7580

RoChaun Johnson
Certificates of Correction Branch
703-756-1580

Thank You For Your Assistance

The request for issuing the above-identified correction(s) is hereby:
Note your decision on the appropriate box.

☒ **Approved**	**All** changes apply.
☐ **Approved in Part**	Specify below which changes **do not** apply.
☐ **Denied**	State the reasons for denial below.

Comments: Changes were in an amendment prior to allowance that had not been properly entered into case.

C. Rones — SPE

2164 — Art Unit

US006546393B1

(12) **United States Patent**
Khan

(10) **Patent No.: US 6,546,393 B1**
(45) **Date of Patent: Apr. 8, 2003**

(54) **SYSTEM METHOD AND ARTICLE OF MANUFACTURE FOR DYNAMICALLY USER-GENERATED INTERNET SEARCH DIRECTORY BASED ON PRIORITIZED SERVER-SIDED USER BOOKMARKS**

(75) Inventor: **Umair Khan**, Fremont, CA (US)

(73) Assignee: **Clickmarks, Inc.**, Fremont, CA (US)

(*) Notice: Subject to any disclaimer, the term of this patent is extended or adjusted under 35 U.S.C. 154(b) by 0 days.

(21) Appl. No.: **09/414,992**

(22) Filed: **Oct. 7, 1999**

(51) **Int. Cl.**[7] **G06F 17/30**
(52) **U.S. Cl.** **707/10**; 709/203
(58) **Field of Search** 707/501, 1, 203, 707/201, 4, 10; 709/203

(56) **References Cited**

U.S. PATENT DOCUMENTS

6,032,162 A * 2/2000 Burke 707/501
6,163,778 A * 12/2000 Fogg et al. 707/10
6,314,423 B1 * 11/2001 Himmel et al. 707/10
6,321,228 B1 * 11/2001 Crandall et al. 707/10
6,324,566 B1 * 11/2001 Himmel et al. 709/203

OTHER PUBLICATIONS

Keller et al. "A Bookmarking Service for Organizing and Sharing URLs," Computer Networks and ISDN Systems, vol. 29, No. 8–13, pp. 1103–1114, Sep. 1997.*
Maarek et al. Automatically Organizing Bookmarks Per Contents; Computer Networks and ISDN Systems; vol. 28, No. 7–11, pp. 1321–1333, May 1996.*

* cited by examiner

Primary Examiner—Charles Rones
(74) *Attorney, Agent, or Firm*—Silicon Valley IP Group, LLC; Dominic M. Kotab

(57) **ABSTRACT**

A system, method and article of manufacture are provided for generating a prioritized network site directory. A link to a site on a network is generated. The site is then added to a site directory that includes a set of categories. The site is categorized into one of the categories of the site directory. The site is also ranked in the category. Sub-categories may also be created into which the site is categorized under one of the categories of the site directory. The site may additionally be ranked in the category according to: the number of generated links to the site, the frequency that the site is accessed by selection of the generated links, and/or polling.

20 Claims, 30 Drawing Sheets

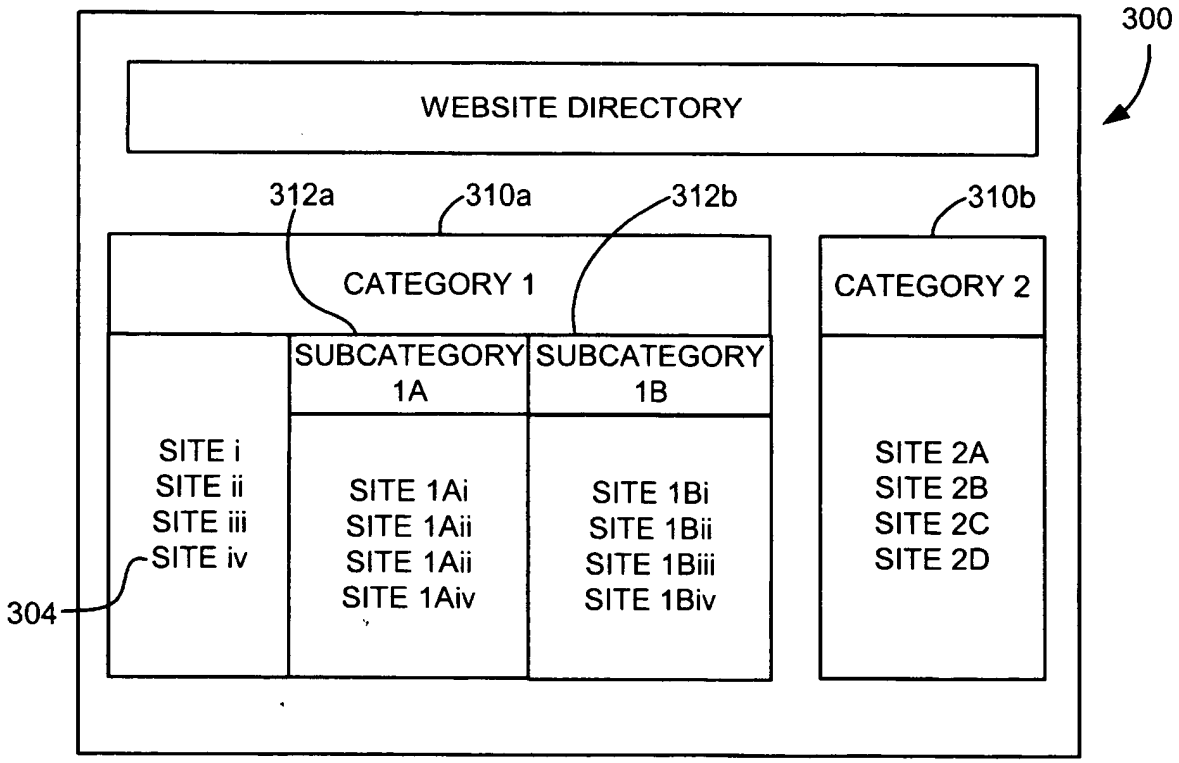

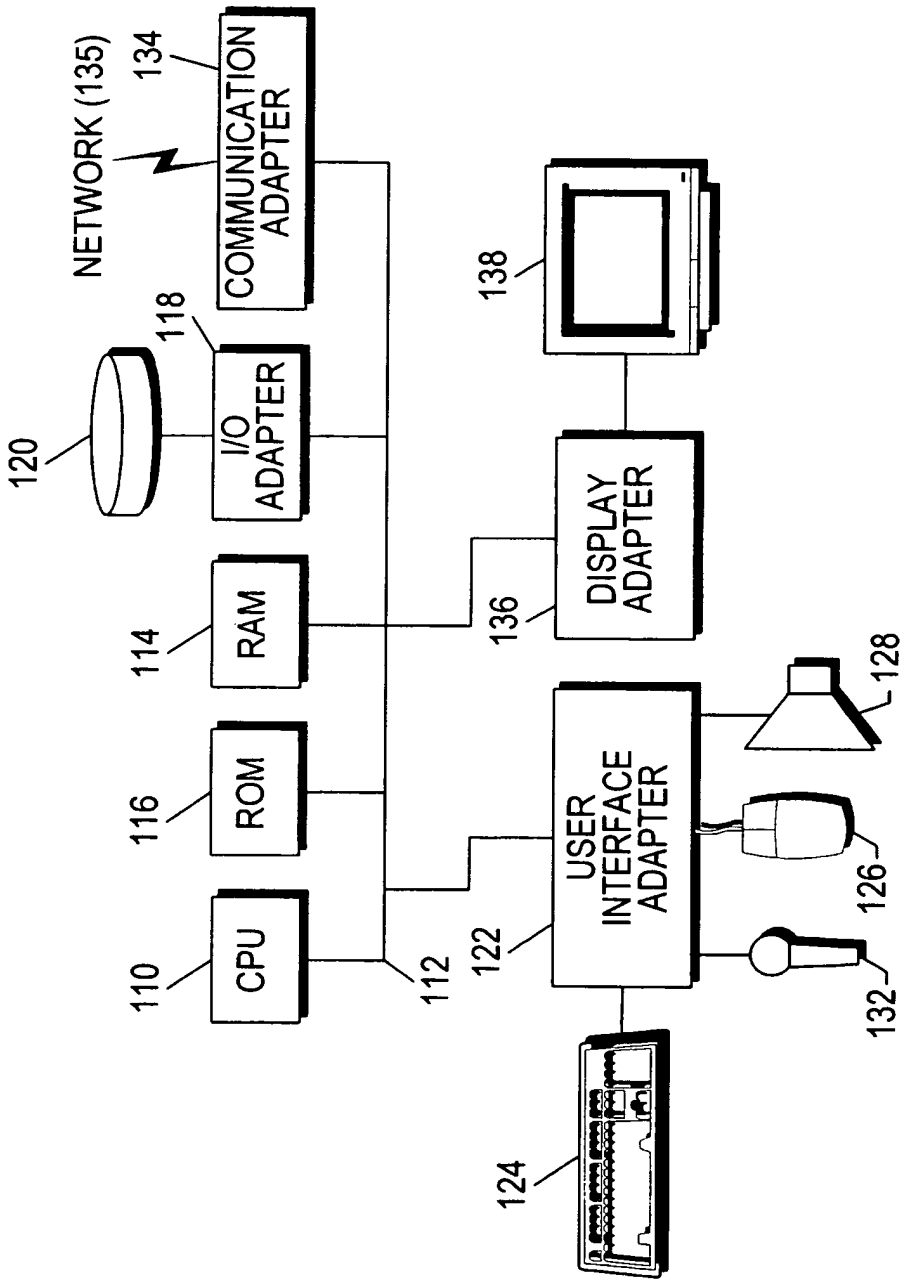
NETWORK (135)
134
COMMUNICATION ADAPTER
118
I/O ADAPTER
120
RAM
114
ROM
116
CPU
110
112
138
DISPLAY ADAPTER
136
USER INTERFACE ADAPTER
122
128
126
132
124

Figure 1

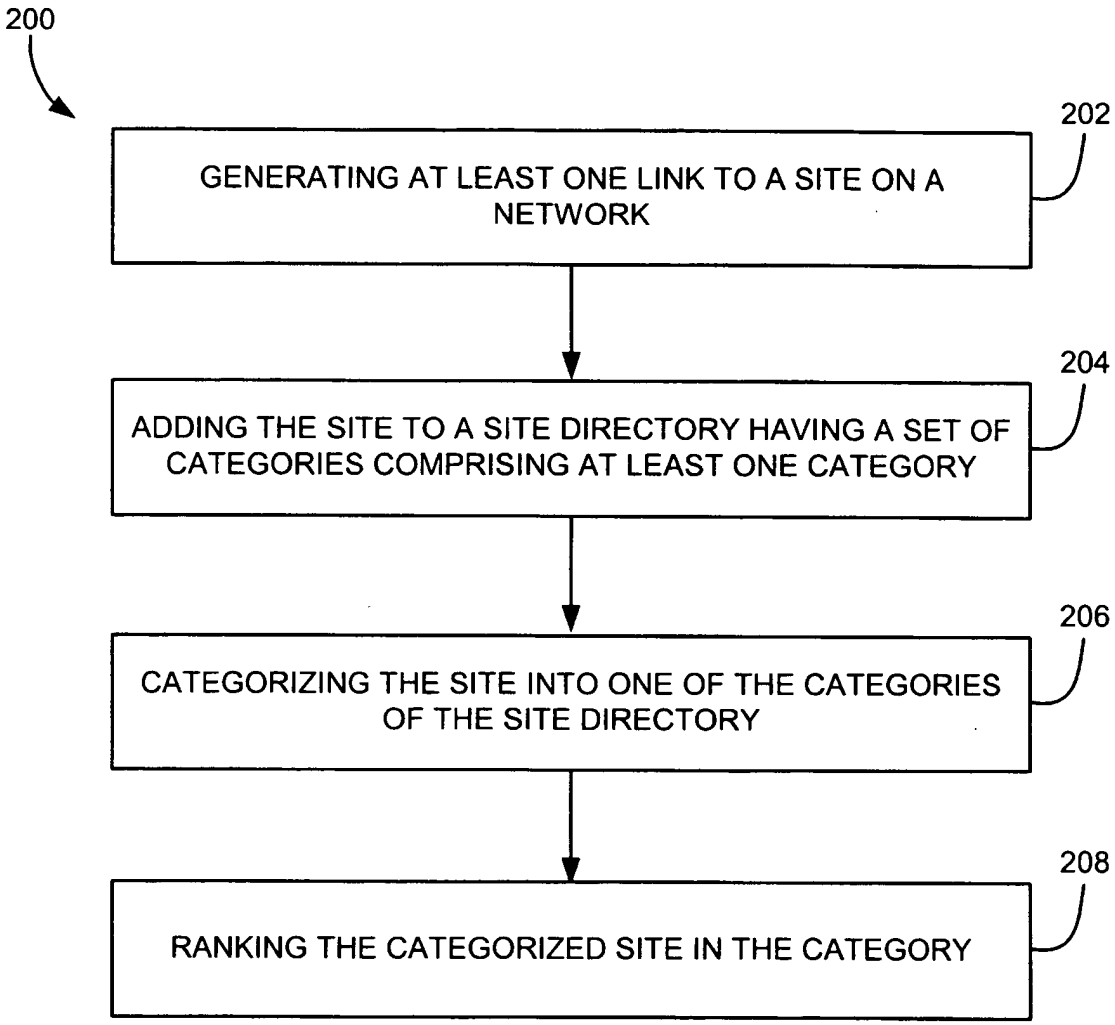
200
202
GENERATING AT LEAST ONE LINK TO A SITE ON A NETWORK
204
ADDING THE SITE TO A SITE DIRECTORY HAVING A SET OF CATEGORIES COMPRISING AT LEAST ONE CATEGORY
206
CATEGORIZING THE SITE INTO ONE OF THE CATEGORIES OF THE SITE DIRECTORY
208
RANKING THE CATEGORIZED SITE IN THE CATEGORY

Figure 2

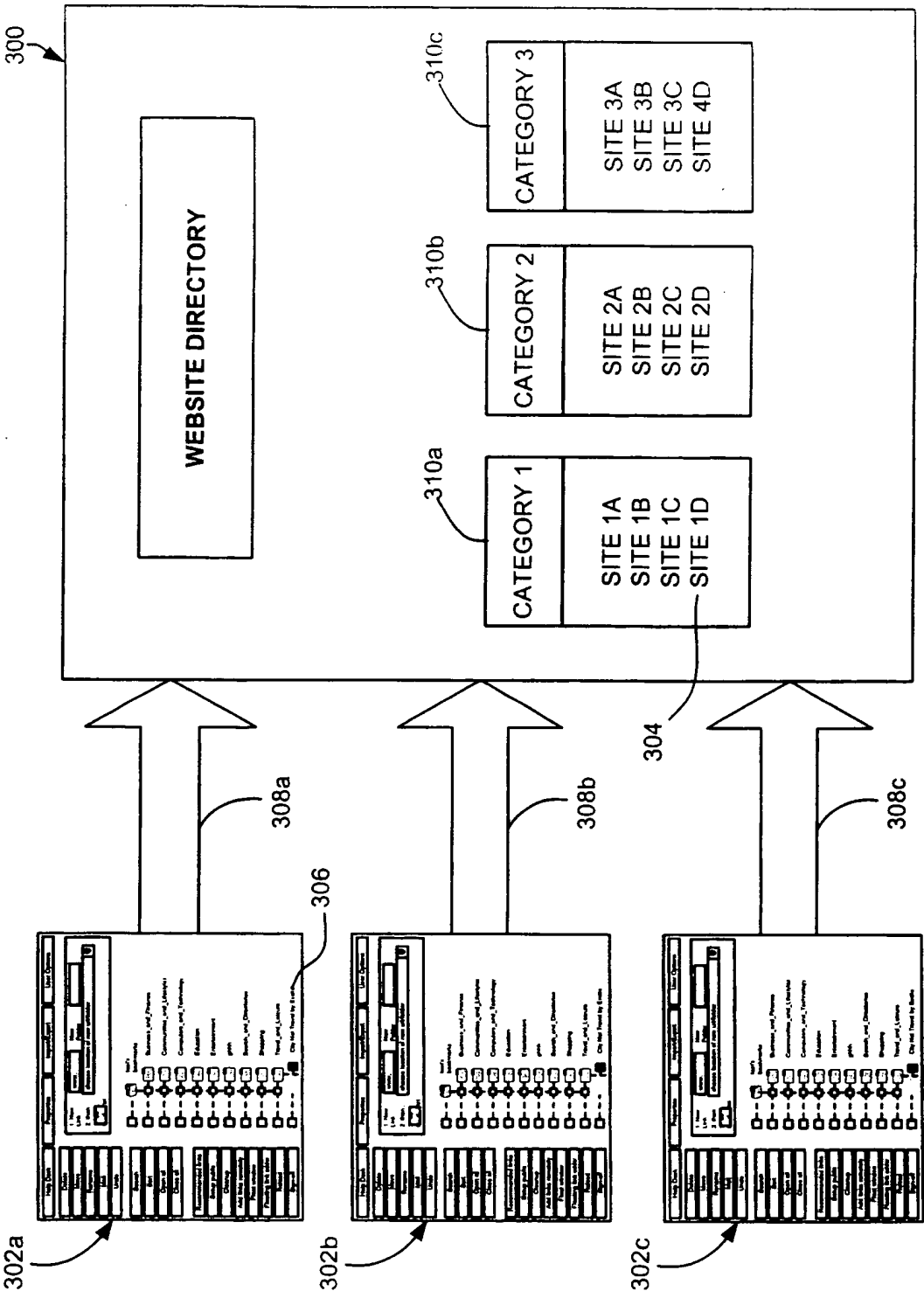
300
WEBSITE DIRECTORY
310c
CATEGORY 3
SITE 3A
SITE 3B
SITE 3C
SITE 4D
310b
CATEGORY 2
SITE 2A
SITE 2B
SITE 2C
SITE 2D
310a
CATEGORY 1
SITE 1A
SITE 1B
SITE 1C
SITE 1D
304
308a
308b
308c
306
302a
302b
302c

Figure 3

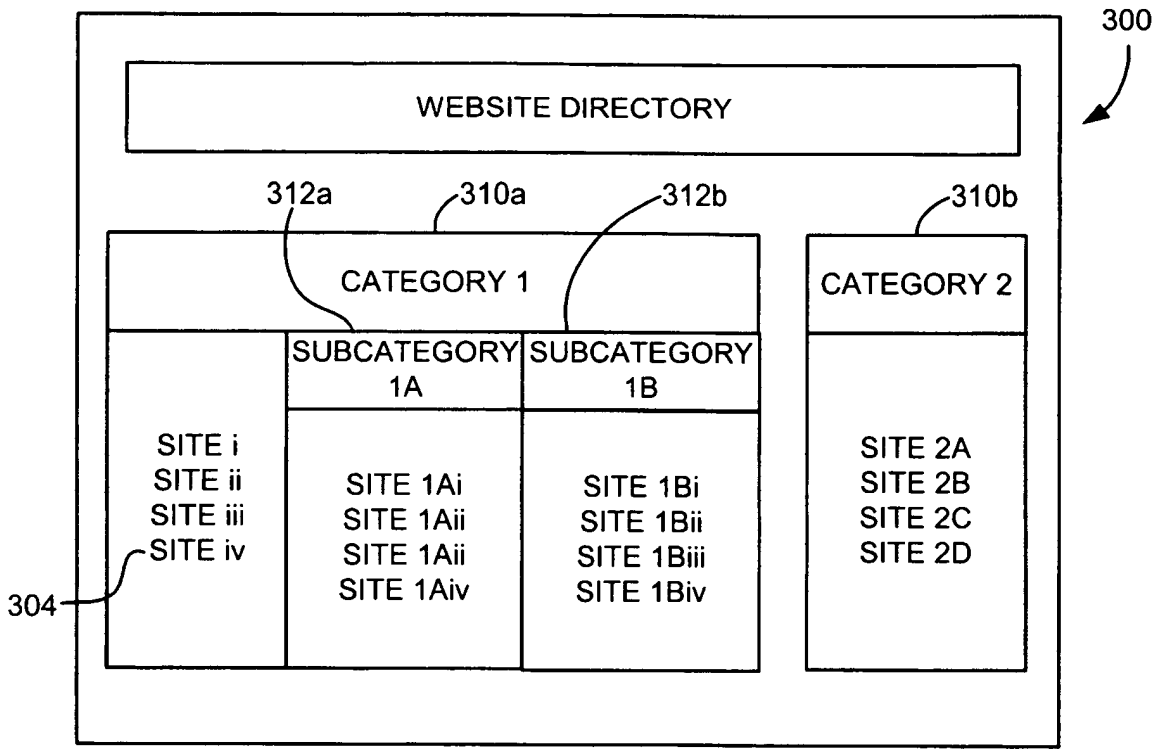

Figure 4

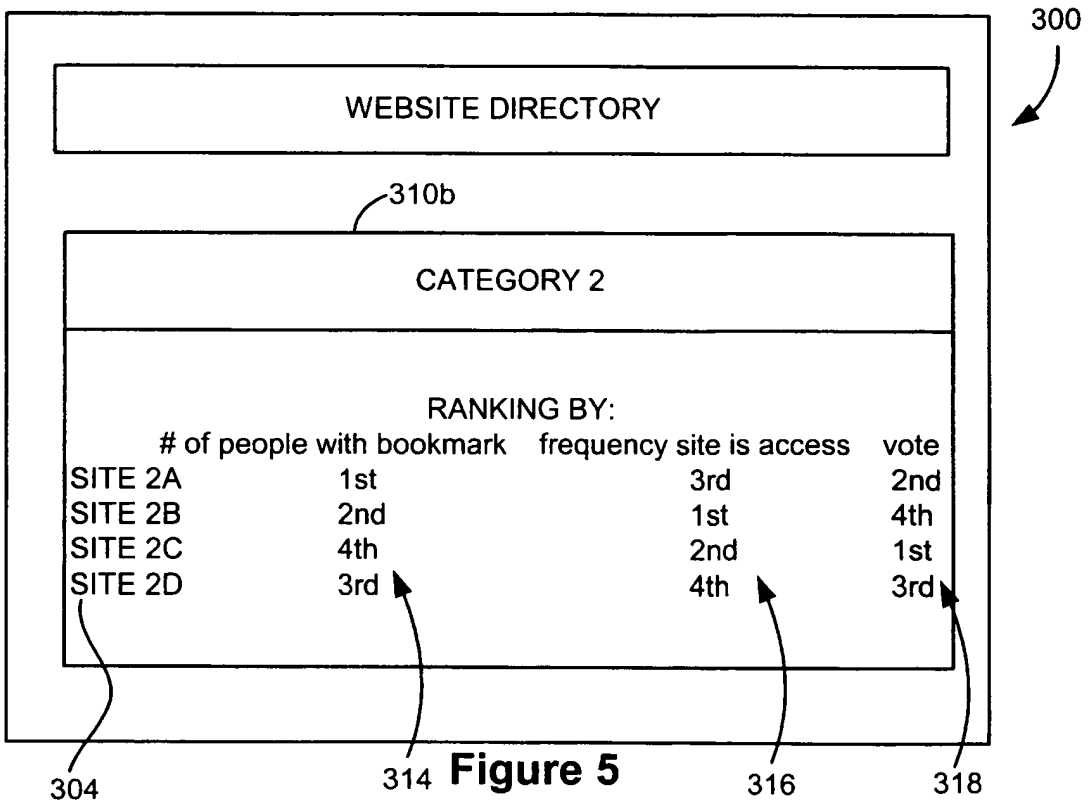

Figure 5

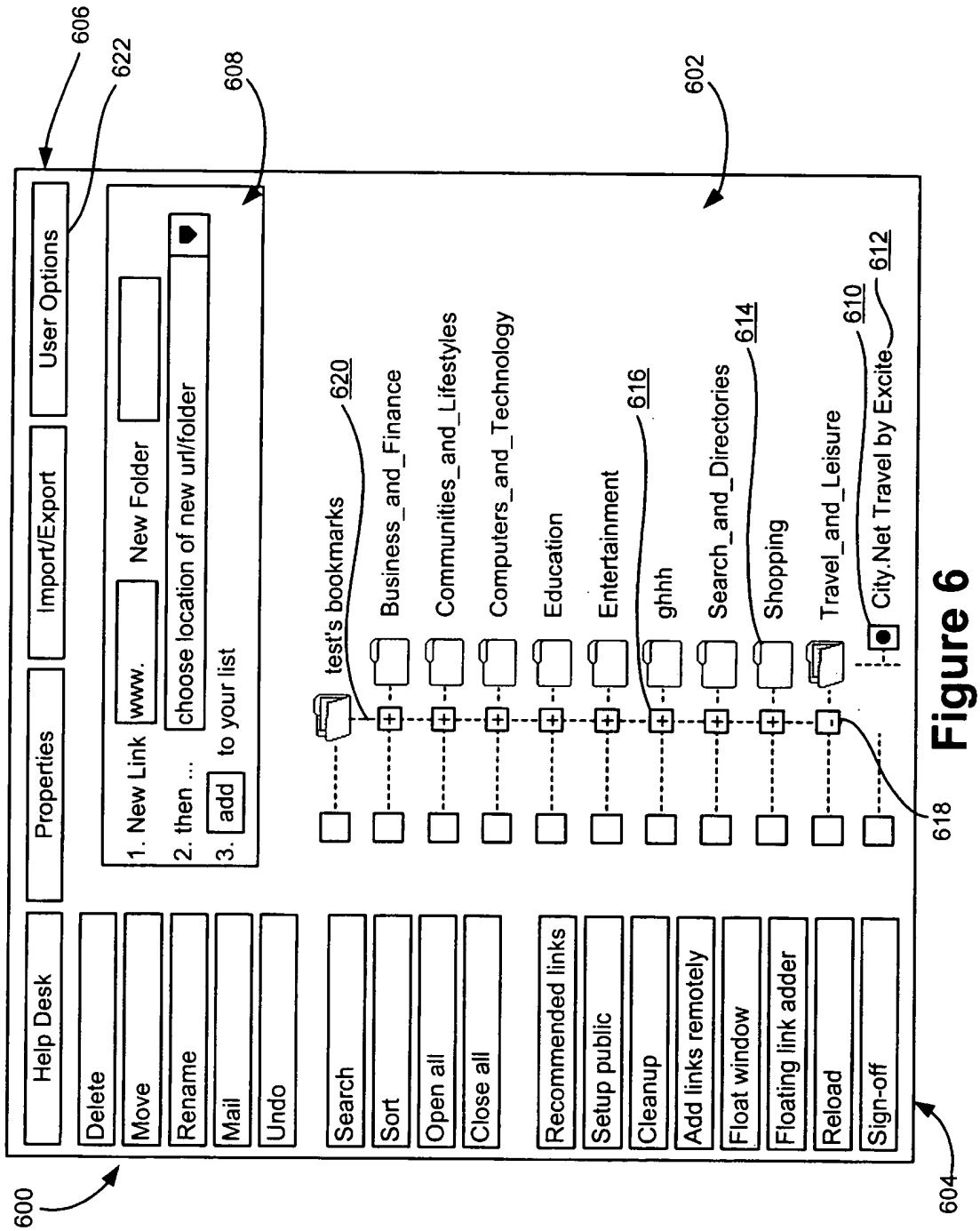
606
622
608
602
User Options
Import/Export
Properties
Help Desk
1. New Link
www.
New Folder
2. then ...
choose location of new url/folder
3.
add
to your list
test's bookmarks
620
Business_and_Finance
Communities_and_Lifestyles
Computers_and_Technology
Education
Entertainment
616
ghhh
Search_and_Directories
614
Shopping
Travel_and_Leisure
610
City.Net Travel by Excite
612
618
Delete
Move
Rename
Mail
Undo
Search
Sort
Open all
Close all
Recommended links
Setup public
Cleanup
Add links remotely
Float window
Floating link adder
Reload
Sign-off
600
604

Figure 6

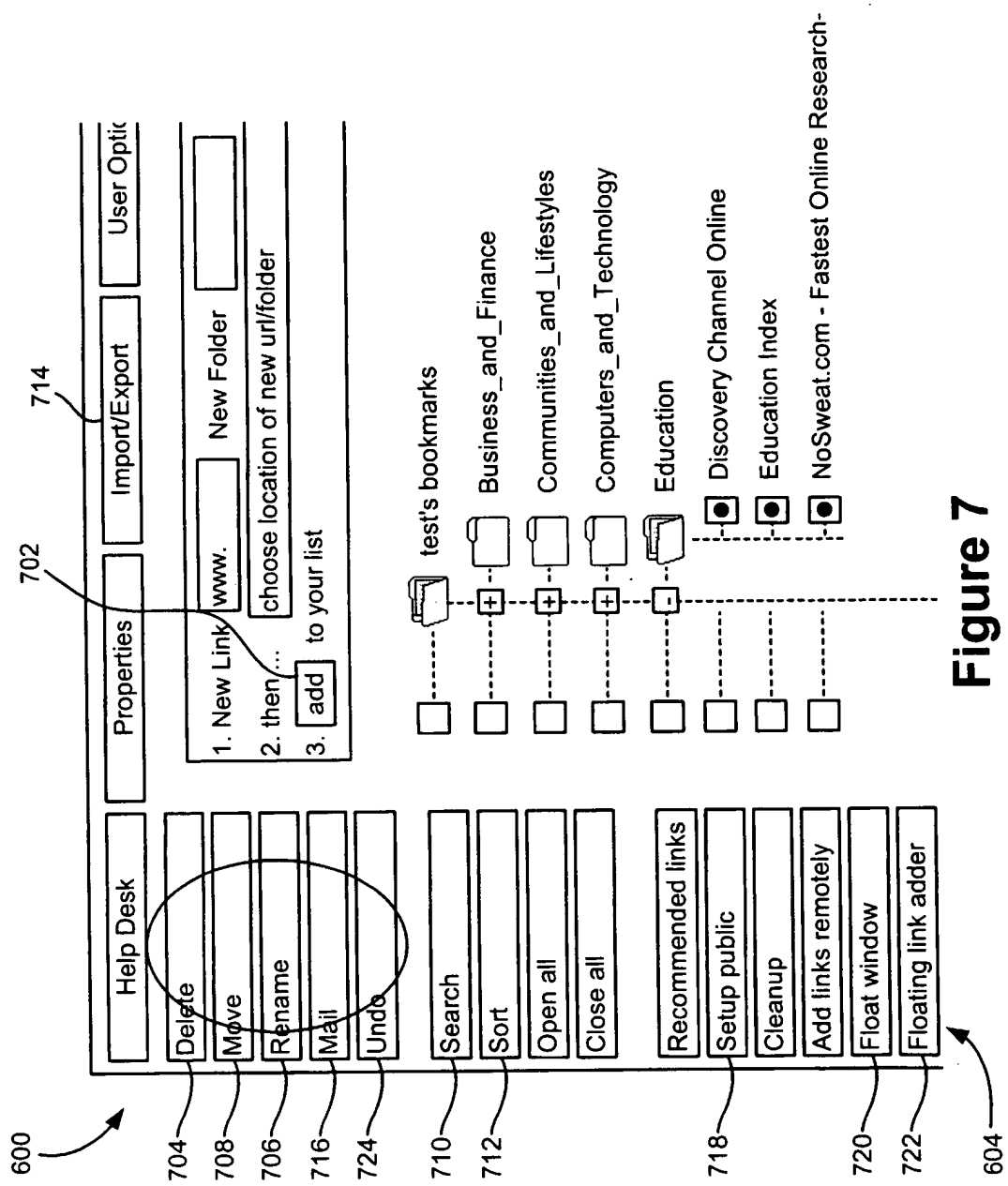
600
Help Desk
Properties
Import/Export
User Optic
714
702
Delete
Move
Rename
Mail
Undo
1. New Link
www.
New Folder
2. then...
choose location of new url/folder
3.
add
to your list
test's bookmarks
Business_and_Finance
Communities_and_Lifestyles
Computers_and_Technology
Education
Discovery Channel Online
Education Index
NoSweat.com - Fastest Online Research-
Search
Sort
Open all
Close all
Recommended links
Setup public
Cleanup
Add links remotely
Float window
Floating link adder
704
708
706
716
724
710
712
718
720
722
604

Figure 7

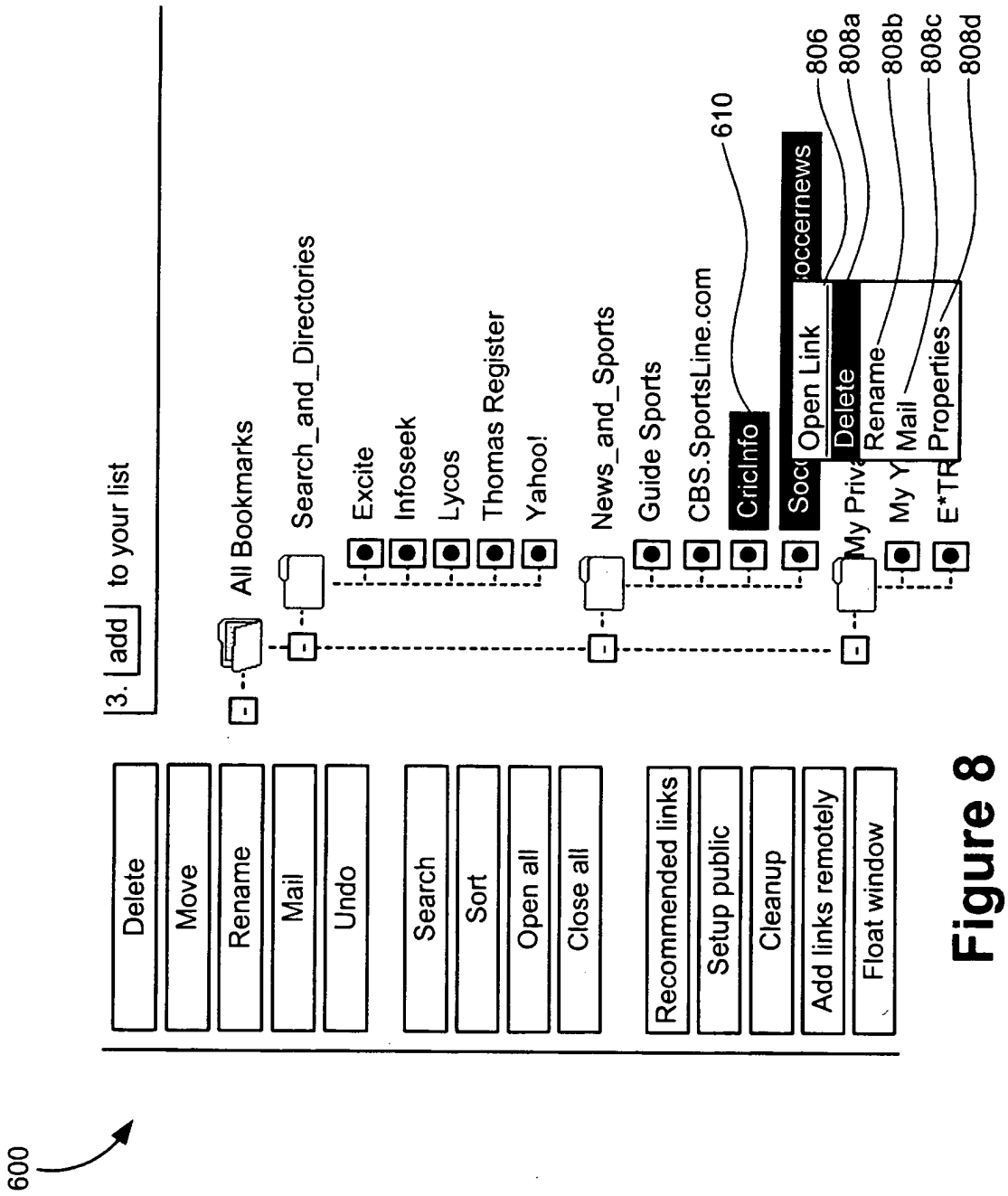
600
3. add to your list
All Bookmarks
Search_and_Directories
Excite
Infoseek
Lycos
Thomas Register
Yahoo!
News_and_Sports
Guide Sports
CBS.SportsLine.com
CricInfo
610
Open Link
Delete
Rename
Mail
Properties
806
808a
808b
808c
808d
Delete
Move
Rename
Mail
Undo
Search
Sort
Open all
Close all
Recommended links
Setup public
Cleanup
Add links remotely
Float window

Figure 8

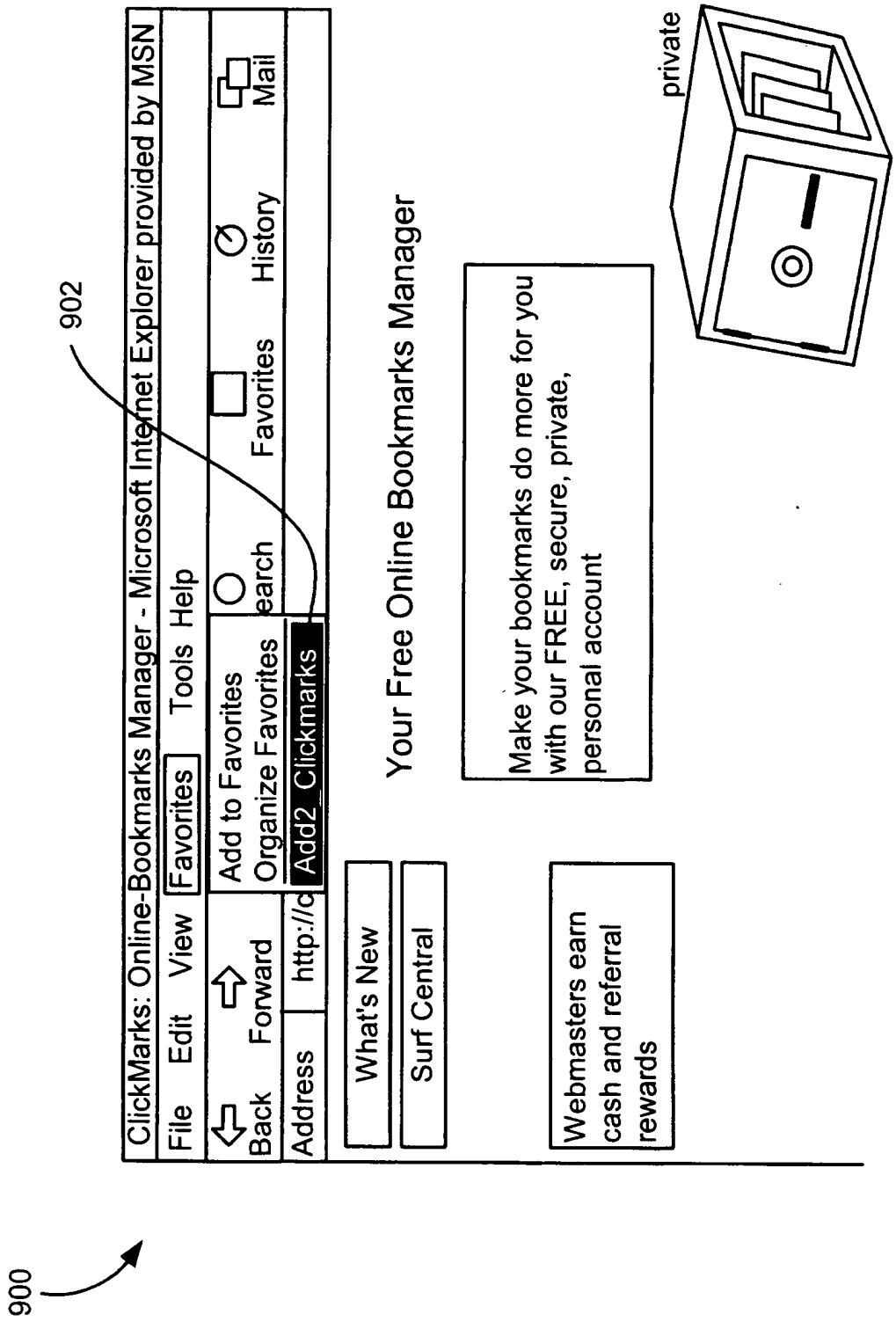
900
902
ClickMarks: Online-Bookmarks Manager - Microsoft Internet Explorer provided by MSN
File Edit View Favorites Tools Help
Back Forward
Add to Favorites
Organize Favorites
earch
Favorites
History
Mail
Address
http://c
Add2_Clickmarks
What's New
Surf Central
Webmasters earn cash and referral rewards
Your Free Online Bookmarks Manager
Make your bookmarks do more for you with our FREE, secure, private, personal account
private

Figure 9

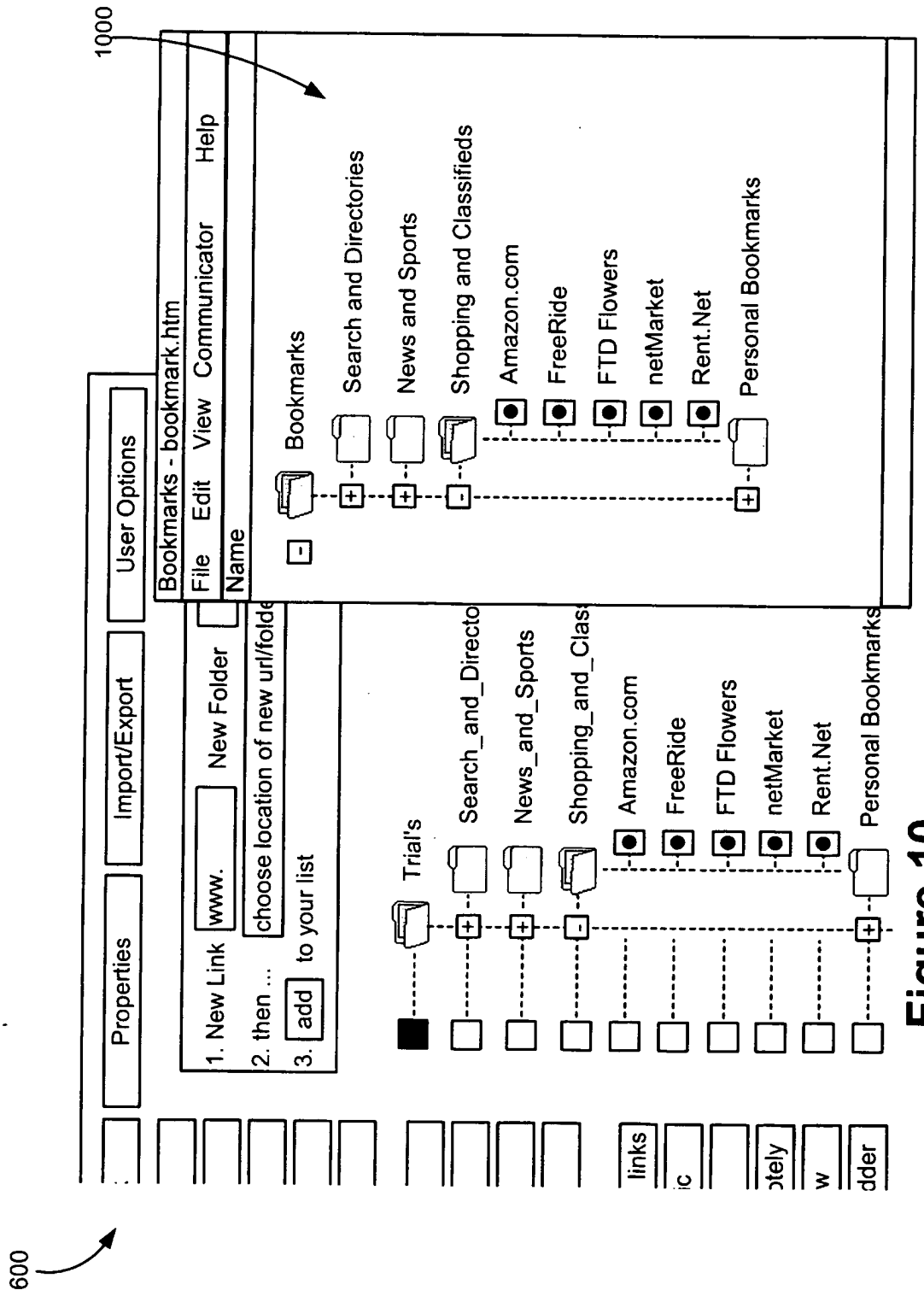
600
1000
Bookmarks - bookmark.htm
File Edit View Communicator Help
Name
Bookmarks
Search and Directories
News and Sports
Shopping and Classifieds
Amazon.com
FreeRide
FTD Flowers
netMarket
Rent.Net
Personal Bookmarks
Properties
Import/Export
User Options
1. New Link
www.
New Folder
2. then ...
choose location of new url/folde
3. add
to your list
Trial's
Search_and_Directo
News_and_Sports
Shopping_and_Clas
Amazon.com
FreeRide
FTD Flowers
netMarket
Rent.Net
Personal Bookmarks
links
ic
otely
w
dder

Figure 10

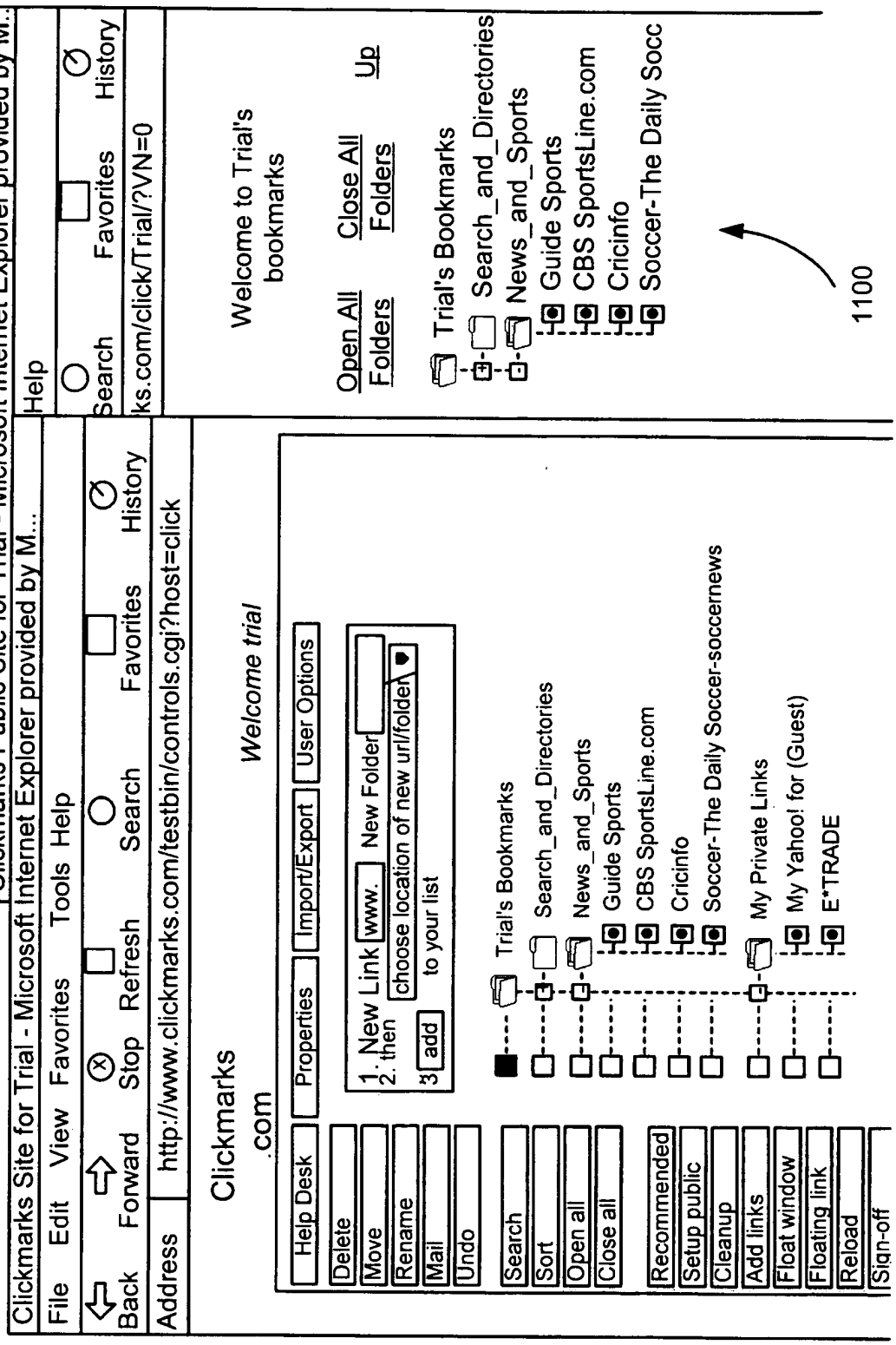
600
Clickmarks Public Site for Trial - Microsoft Internet Explorer provided by M..
Clickmarks Site for Trial - Microsoft Internet Explorer provided by M...
File Edit View Favorites Tools Help
Back Forward Stop Refresh Search Favorites History
Address http://www.clickmarks.com/testbin/controls.cgi?host=click
Clickmarks .com
Welcome trial
Help Desk
Properties
Import/Export
User Options
Delete
Move
Rename
Mail
Undo
1. New Link www. New Folder
2. then choose location of new url/folder
3 add to your list
Search
Sort
Open all
Close all
Recommended
Setup public
Cleanup
Add links
Float window
Floating link
Reload
Sign-off
Trial's Bookmarks
Search_and_Directories
News_and_Sports
Guide Sports
CBS SportsLine.com
Cricinfo
Soccer-The Daily Soccernews
My Private Links
My Yahoo! for (Guest)
E*TRADE
Search Favorites History
ks.com/click/Trial/?VN=0
Welcome to Trial's bookmarks
Open All Close All Up
Folders Folders
Trial's Bookmarks
Search_and_Directories
News_and_Sports
Guide Sports
CBS SportsLine.com
Cricinfo
Soccer-The Daily Socc
1100

Figure 11

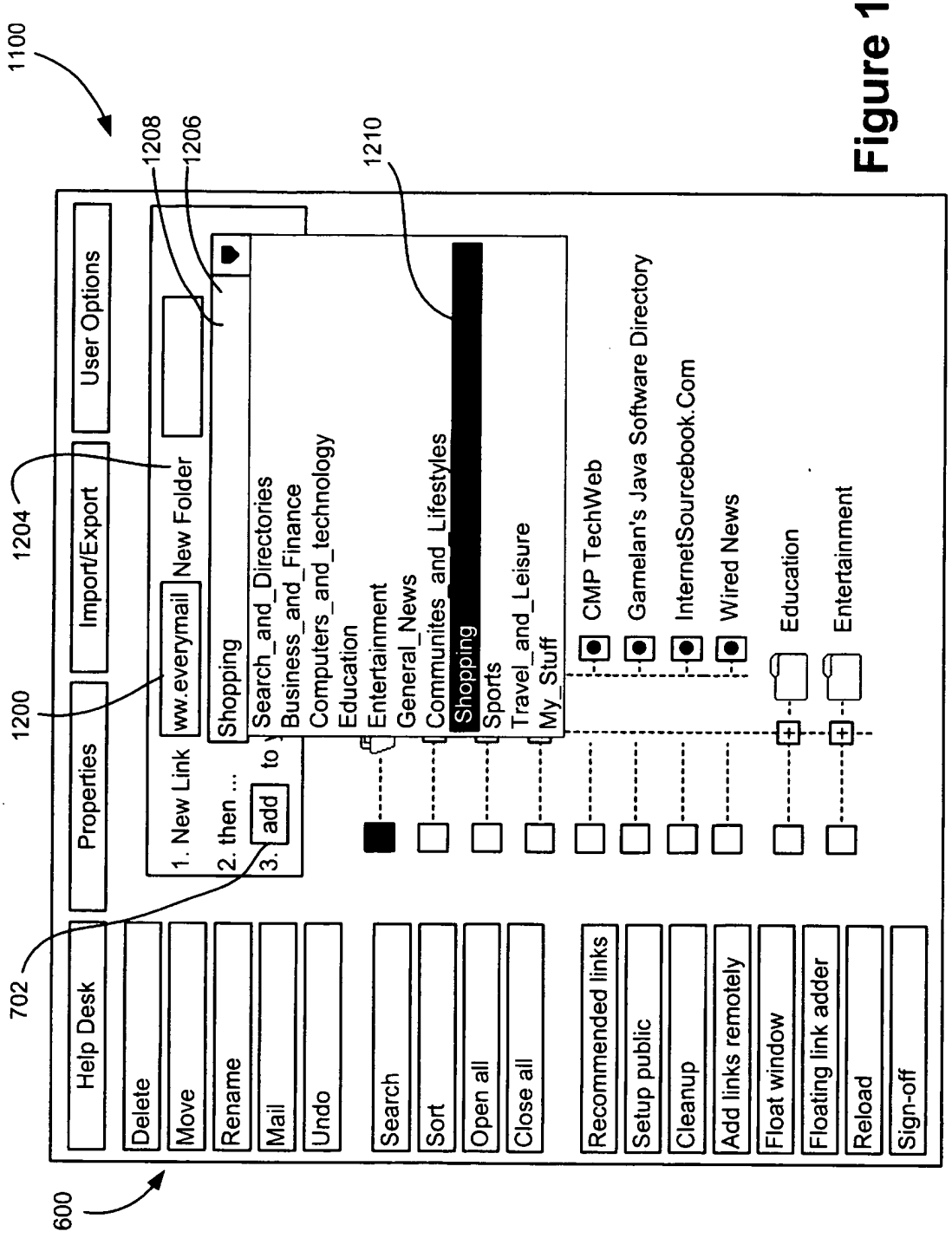
1100
1208
1206
1210
1204
1200
702
600
Help Desk
Properties
Import/Export
User Options
Delete
Move
Rename
Mail
Undo
Search
Sort
Open all
Close all
Recommended links
Setup public
Cleanup
Add links remotely
Float window
Floating link adder
Reload
Sign-off
1. New Link
ww.everymail
New Folder
2. then ...
3.
add
to
Shopping
Search_and_Directories
Business_and_Finance
Computers_and_technology
Education
Entertainment
General_News
Communites_and_Lifestyles
Shopping
Sports
Travel_and_Leisure
My_Stuff
CMP TechWeb
Gamelan's Java Software Directory
InternetSourcebook.Com
Wired News
Education
Entertainment

Figure 12

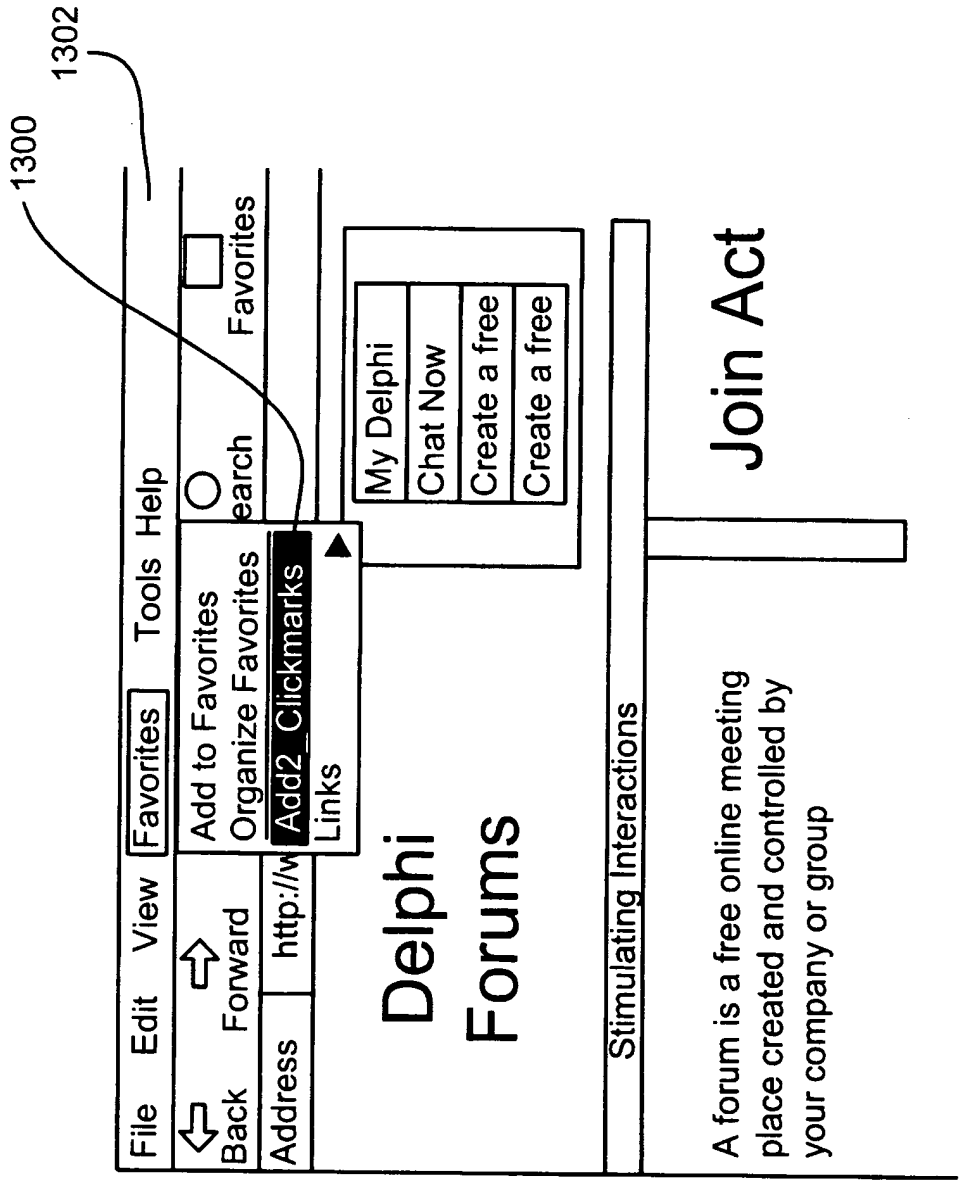
1300
1302
File Edit View Favorites Tools Help
Back Forward
Address http://w
Add to Favorites
Organize Favorites
Add2_Clickmarks
Links
earch
Favorites
Delphi
Forums
My Delphi
Chat Now
Create a free
Create a free
Stimulating Interactions
Join Act
A forum is a free online meeting place created and controlled by your company or group

Figure 13

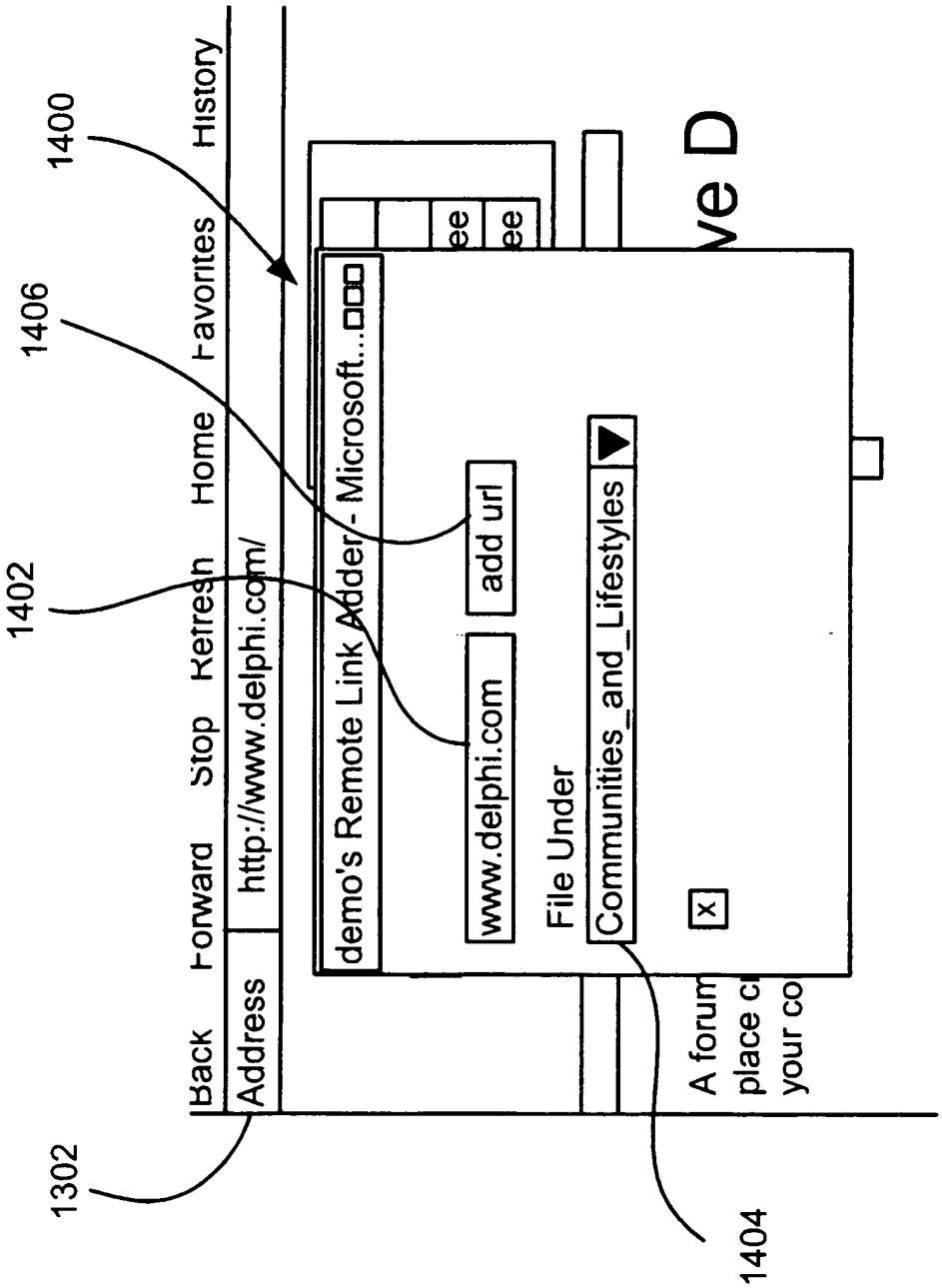
1400
1406
1402
1302
1404
Back
Forward
Stop
Refresh
Home
Favorites
History
Address
http://www.delphi.com/
demo's Remote Link Adder - Microsoft...
add url
www.delphi.com
File Under
Communities_and_Lifestyles
A forum
place c
your co

Figure 14

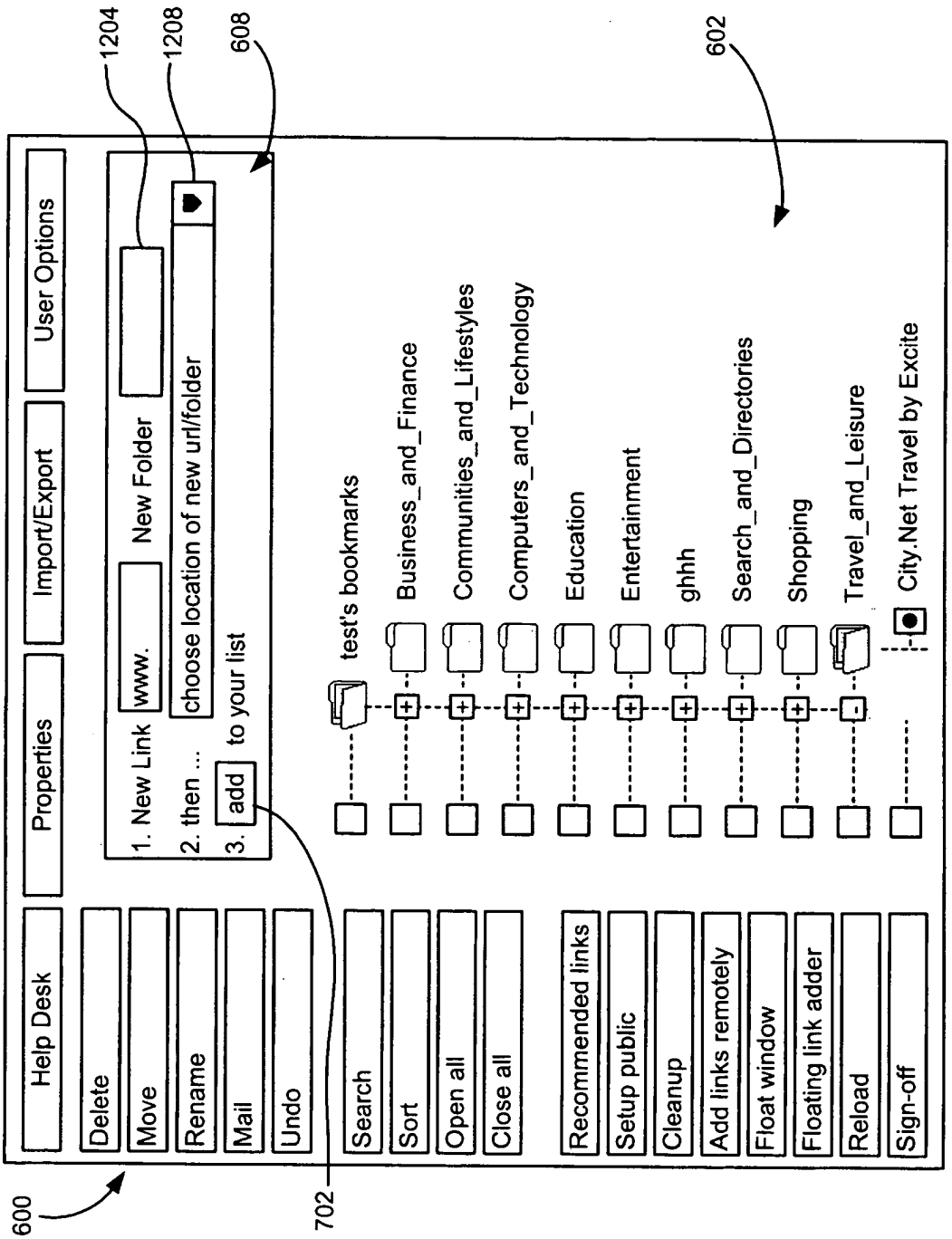
600
Help Desk
Properties
Import/Export
User Options
Delete
Move
Rename
Mail
Undo
Search
Sort
Open all
Close all
Recommended links
Setup public
Cleanup
Add links remotely
Float window
Floating link adder
Reload
Sign-off
1. New Link
www.
New Folder
2. then ...
choose location of new url/folder
3.
add
to your list
1204
1208
608
602
702
test's bookmarks
Business_and_Finance
Communities_and_Lifestyles
Computers_and_Technology
Education
Entertainment
ghhh
Search_and_Directories
Shopping
Travel_and_Leisure
City.Net Travel by Excite

Figure 15

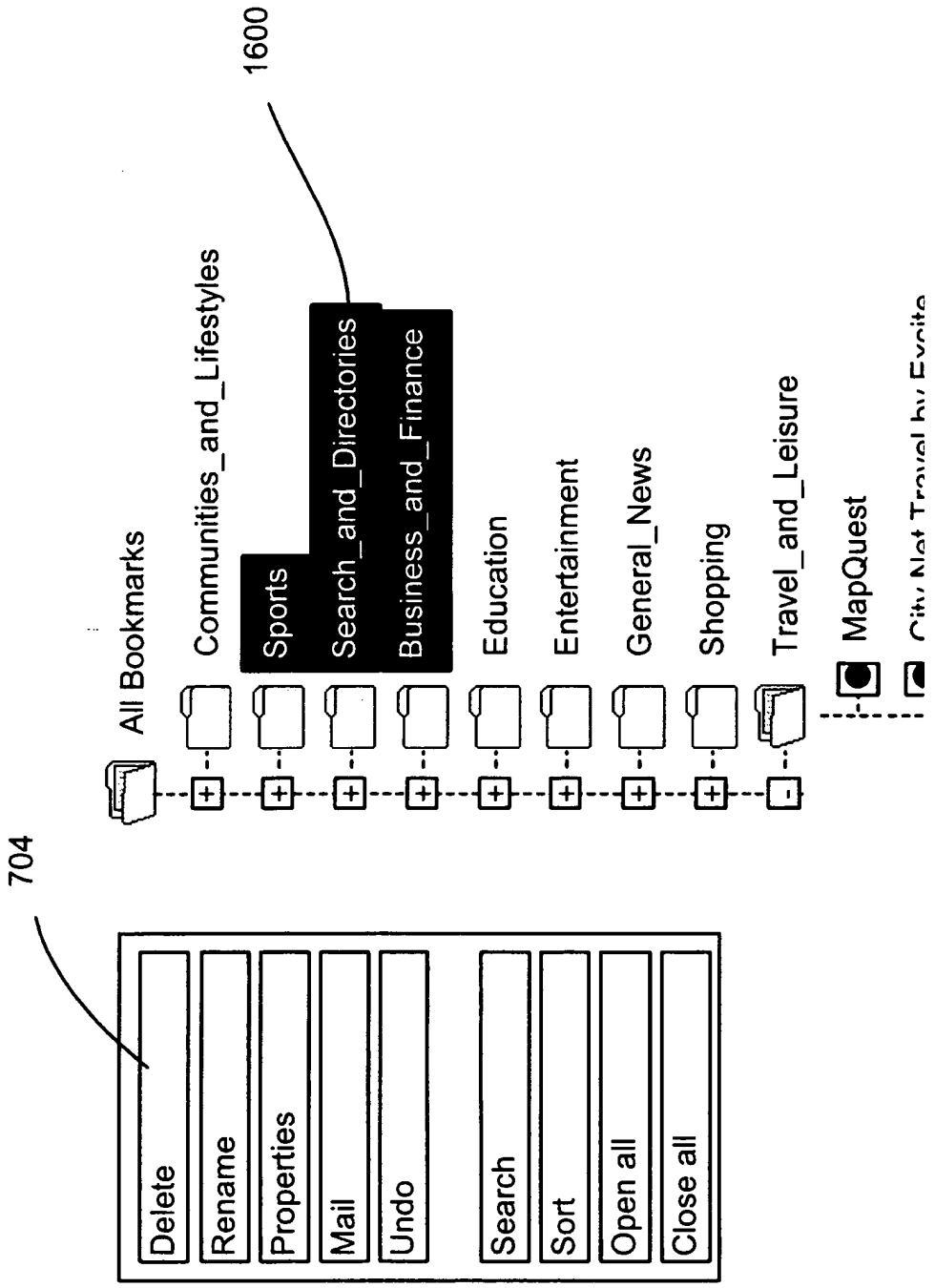
1600
All Bookmarks
Communities_and_Lifestyles
Sports
Search_and_Directories
Business_and_Finance
Education
Entertainment
General_News
Shopping
Travel_and_Leisure
MapQuest
704
Delete
Rename
Properties
Mail
Undo
Search
Sort
Open all
Close all

Figure 16

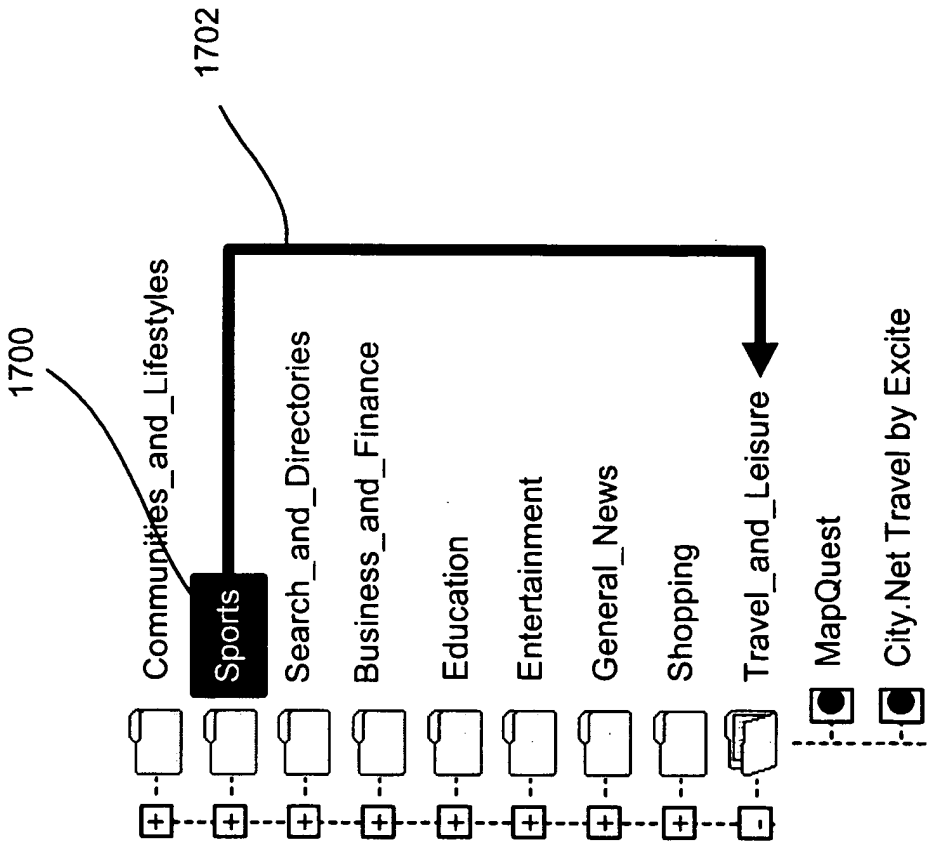
1700
1702
Communities_and_Lifestyles
Sports
Search_and_Directories
Business_and_Finance
Education
Entertainment
General_News
Shopping
Travel_and_Leisure
MapQuest
City.Net Travel by Excite

Figure 17

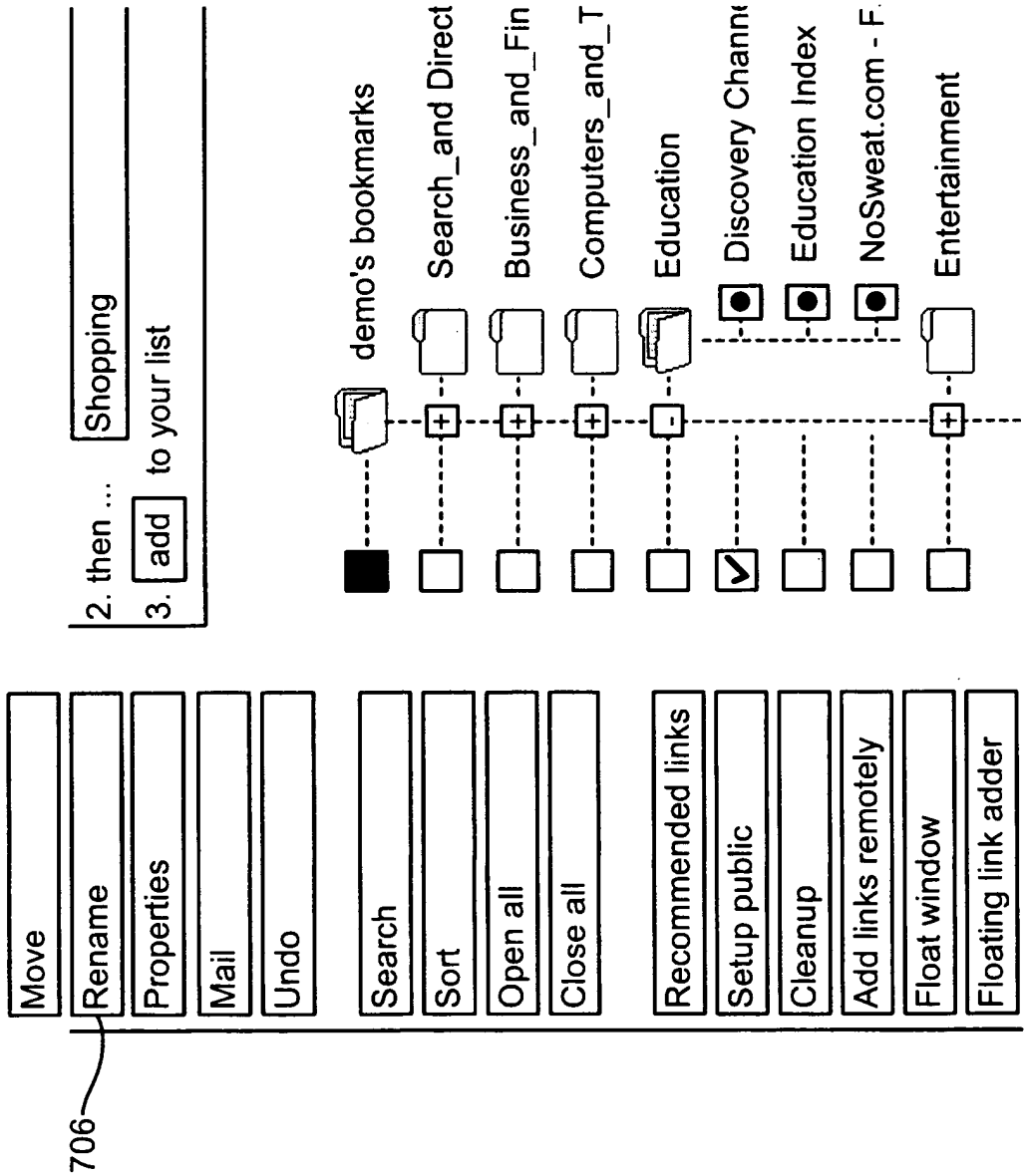
2. then ... Shopping
3. add to your list
demo's bookmarks
Search_and Direct
Business_and_Fin
Computers_and_T
Education
Discovery Channe
Education Index
NoSweat.com - F
Entertainment
Move
Rename
Properties
Mail
Undo
Search
Sort
Open all
Close all
Recommended links
Setup public
Cleanup
Add links remotely
Float window
Floating link adder
706

Figure 18

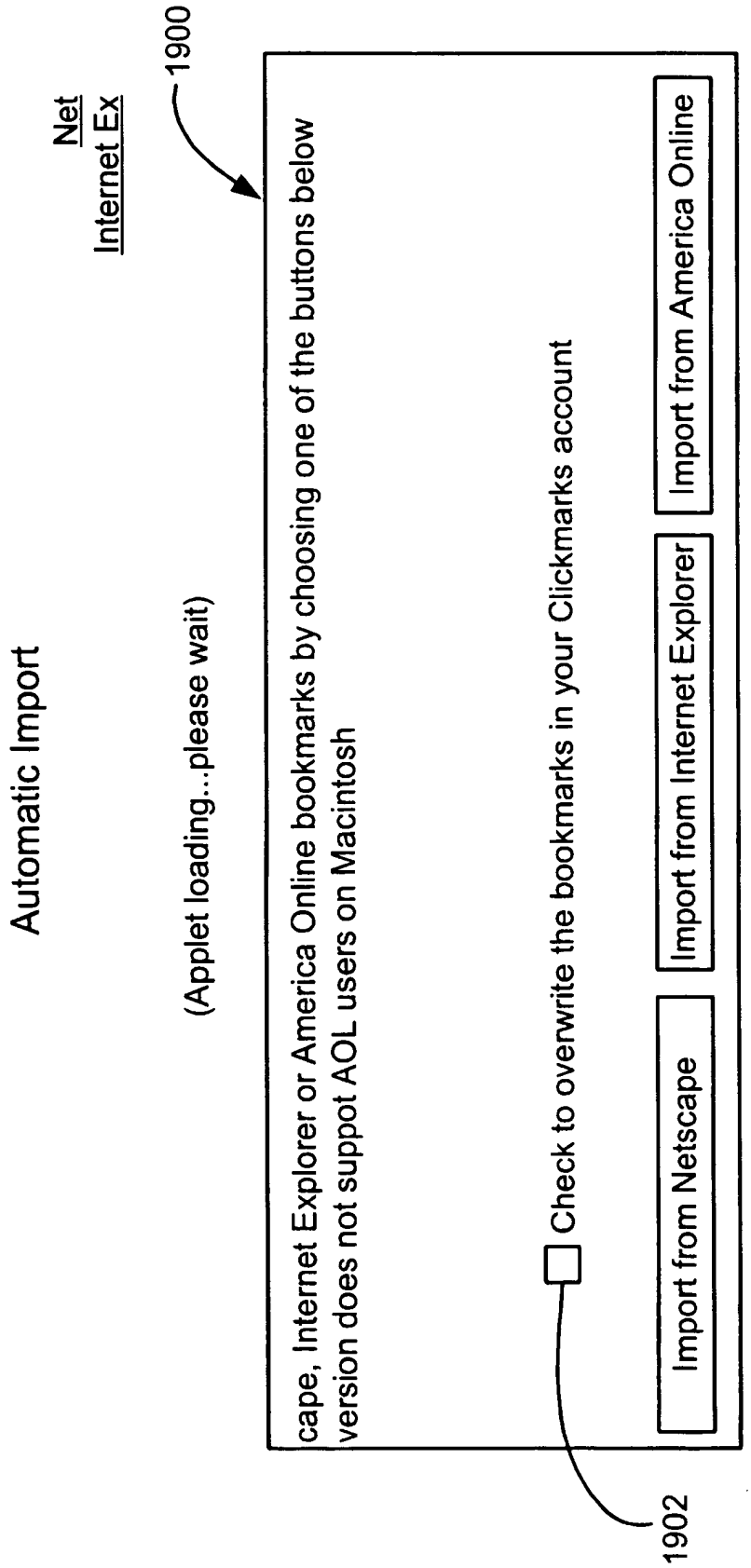
Automatic Import
(Applet loading...please wait)
Net
Internet Ex
1900
cape, Internet Explorer or America Online bookmarks by choosing one of the buttons below
version does not suppot AOL users on Macintosh
Check to overwrite the bookmarks in your Clickmarks account
Import from Netscape
Import from Internet Explorer
Import from America Online
1902

Figure 19

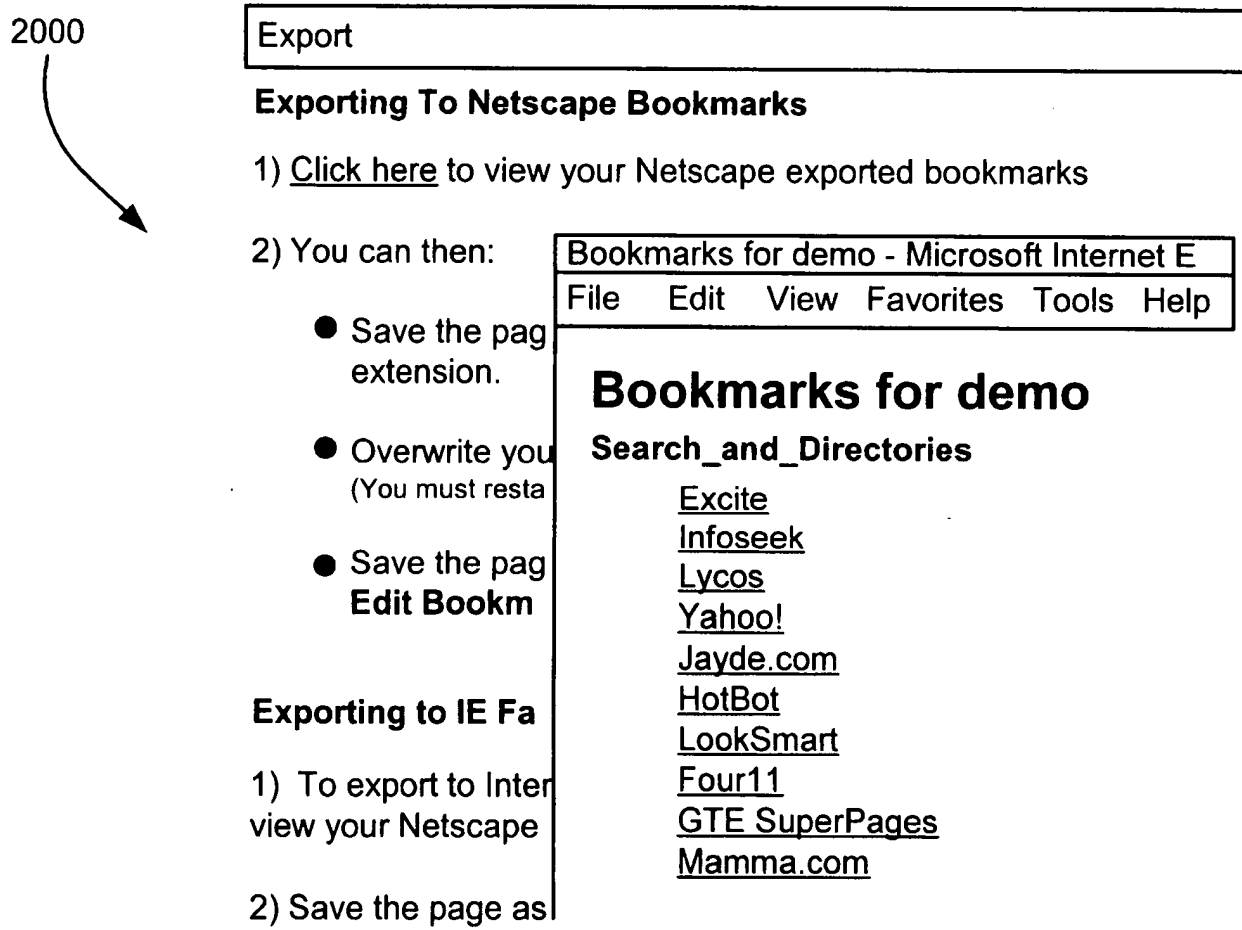
2000
Export
Exporting To Netscape Bookmarks
1) Click here to view your Netscape exported bookmarks
2) You can then:
● Save the pag
extension.
● Overwrite you
(You must resta
● Save the pag
Edit Bookm
Exporting to IE Fa
1) To export to Inter
view your Netscape
2) Save the page as
Bookmarks for demo - Microsoft Internet E
File Edit View Favorites Tools Help
Bookmarks for demo
Search_and_Directories
Excite
Infoseek
Lycos
Yahoo!
Jayde.com
HotBot
LookSmart
Four11
GTE SuperPages
Mamma.com

Figure 20

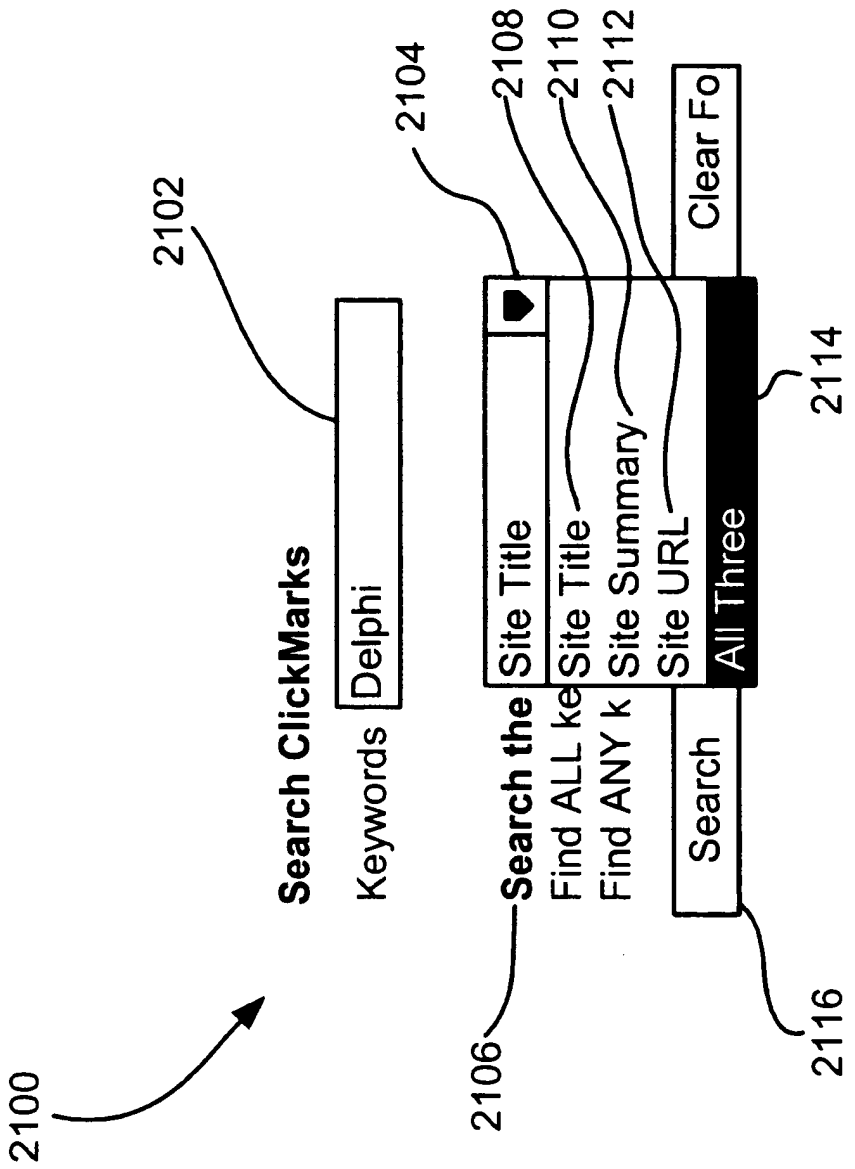
2100
2102
2104
2106
2108
2110
2112
2114
2116
Search ClickMarks
Keywords
Delphi
Search the
Find ALL ke
Find ANY k
Site Title
Site Title
Site Summary
Site URL
All Three
Clear Fo
Search

Figure 21

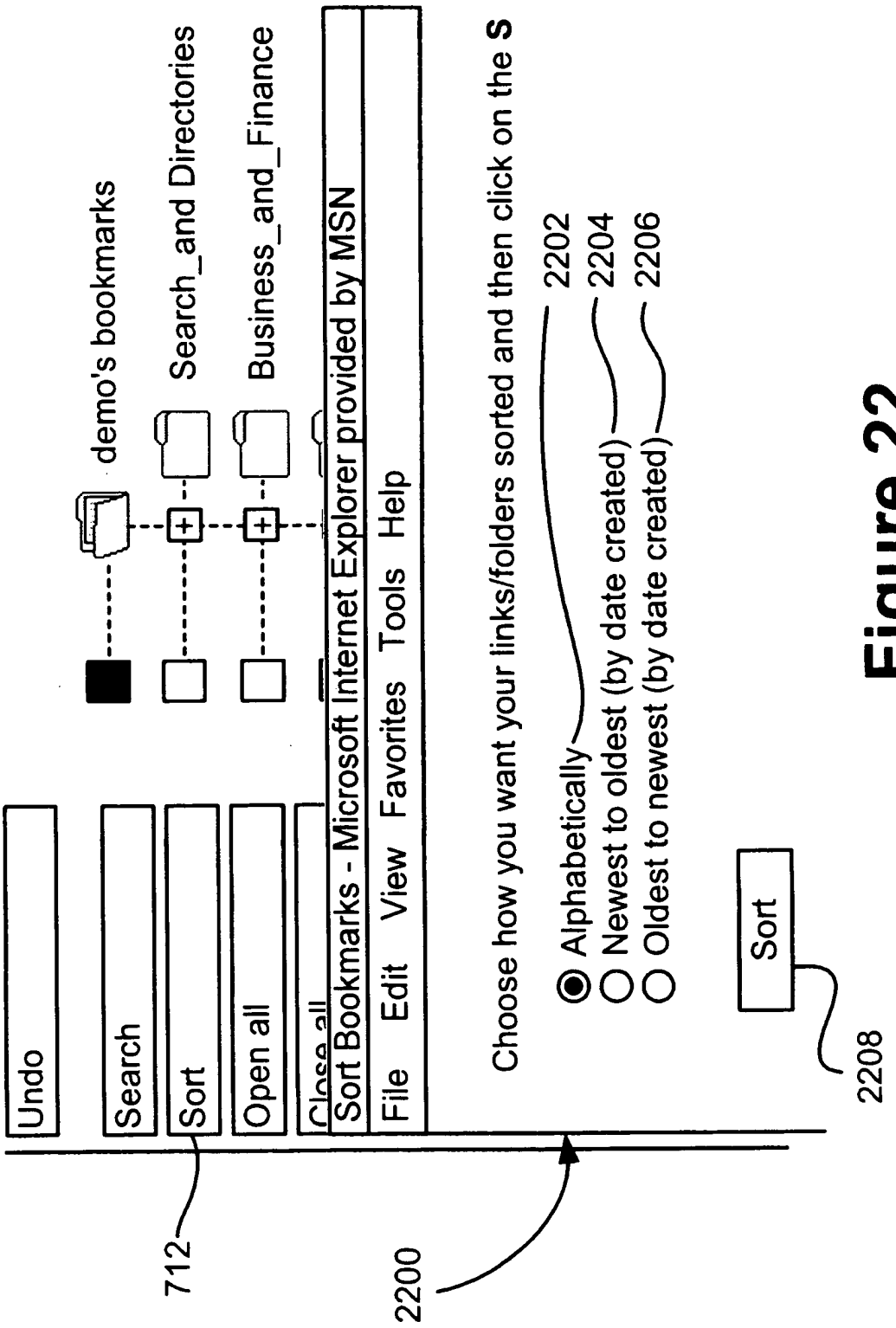
Undo
Search
Sort
Open all
Close all
Sort Bookmarks - Microsoft Internet Explorer provided by MSN
File Edit View Favorites Tools Help
demo's bookmarks
Search_and Directories
Business_and_Finance
Choose how you want your links/folders sorted and then click on the S
Alphabetically
Newest to oldest (by date created)
Oldest to newest (by date created)
Sort
712
2200
2202
2204
2206
2208

Figure 22

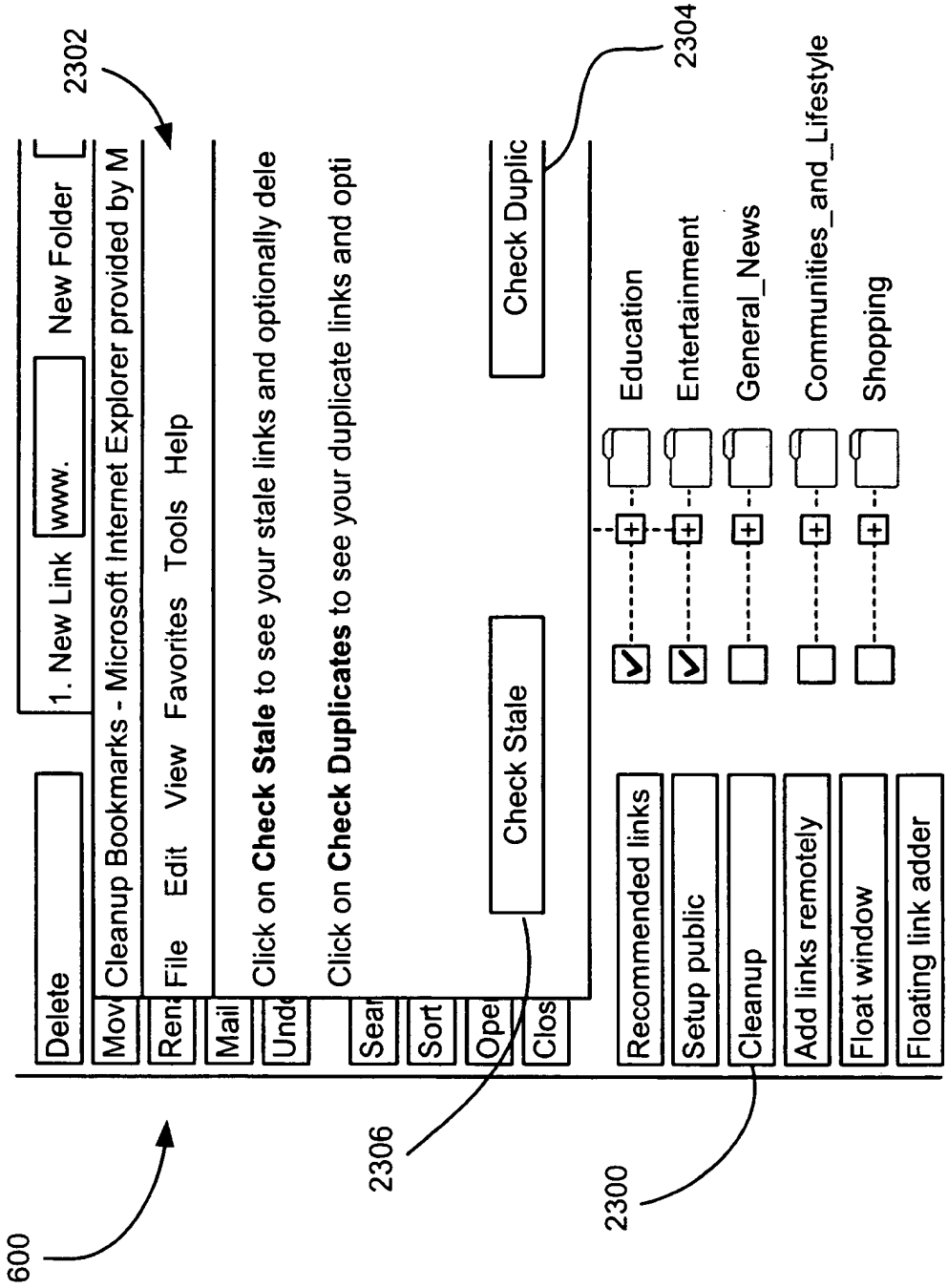
600
2302
2304
2306
2300
Delete
1. New Link
www.
New Folder
Cleanup Bookmarks - Microsoft Internet Explorer provided by M
File Edit View Favorites Tools Help
Click on **Check Stale** to see your stale links and optionally dele
Click on **Check Duplicates** to see your duplicate links and opti
Check Stale
Check Duplic
Recommended links
Setup public
Cleanup
Add links remotely
Float window
Floating link adder
Education
Entertainment
General_News
Communities_and_Lifestyle
Shopping

Figure 23

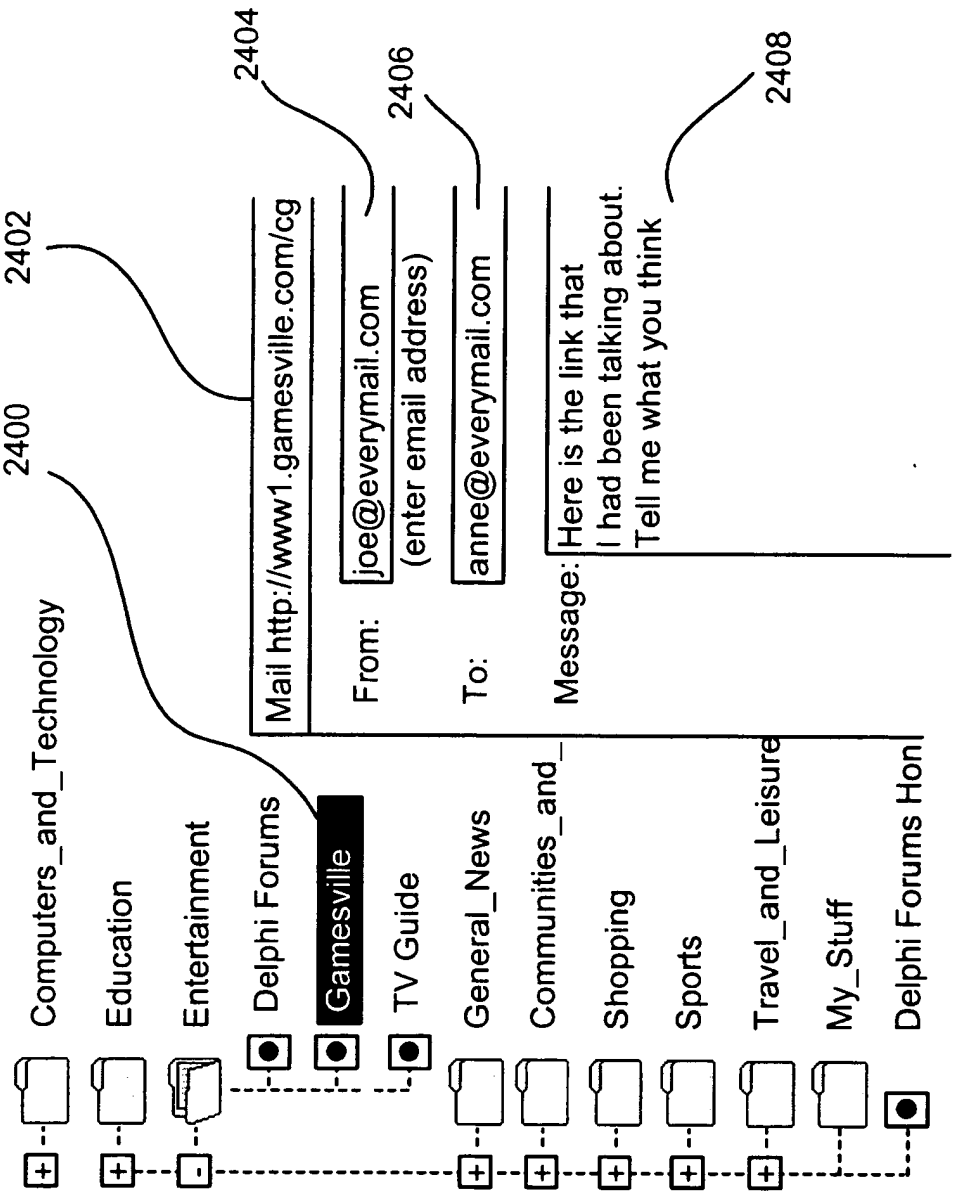
2400
2402
2404
2406
2408
Computers_and_Technology
Education
Entertainment
Delphi Forums
Gamesville
TV Guide
General_News
Communities_and_
Shopping
Sports
Travel_and_Leisure
My_Stuff
Delphi Forums Hon
Mail http://www1.gamesville.com/cg
From:
joe@everymail.com
(enter email address)
To:
anne@everymail.com
Message:
Here is the link that
I had been talking about.
Tell me what you think

Figure 24

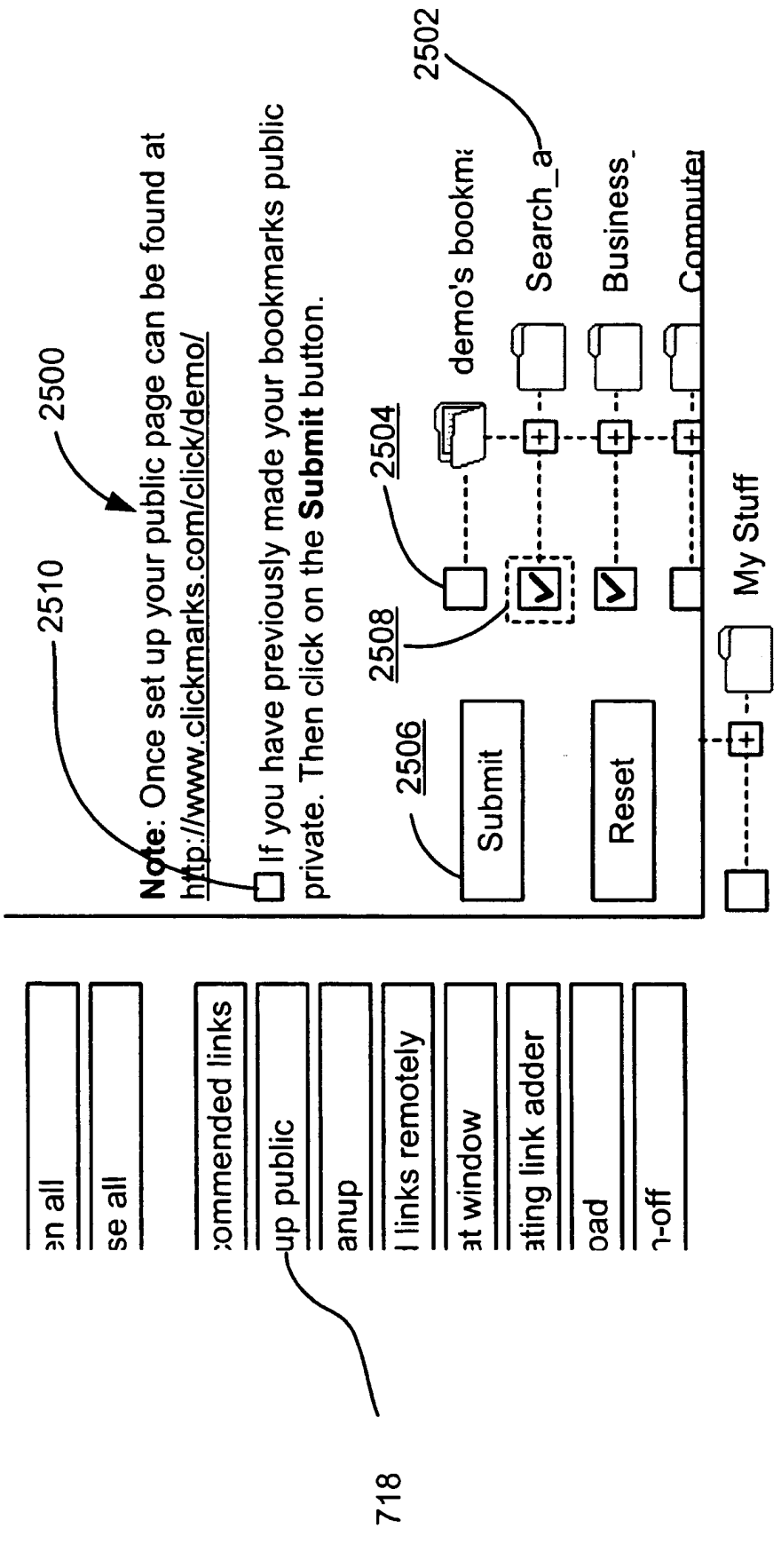
2500
2510
Note: Once set up your public page can be found at http://www.clickmarks.com/click/demo/
If you have previously made your bookmarks public private. Then click on the Submit button.
2504
2508
2506
Submit
Reset
2502
demo's bookm
Search_a
Business_
Computer
My Stuff
718

Figure 25

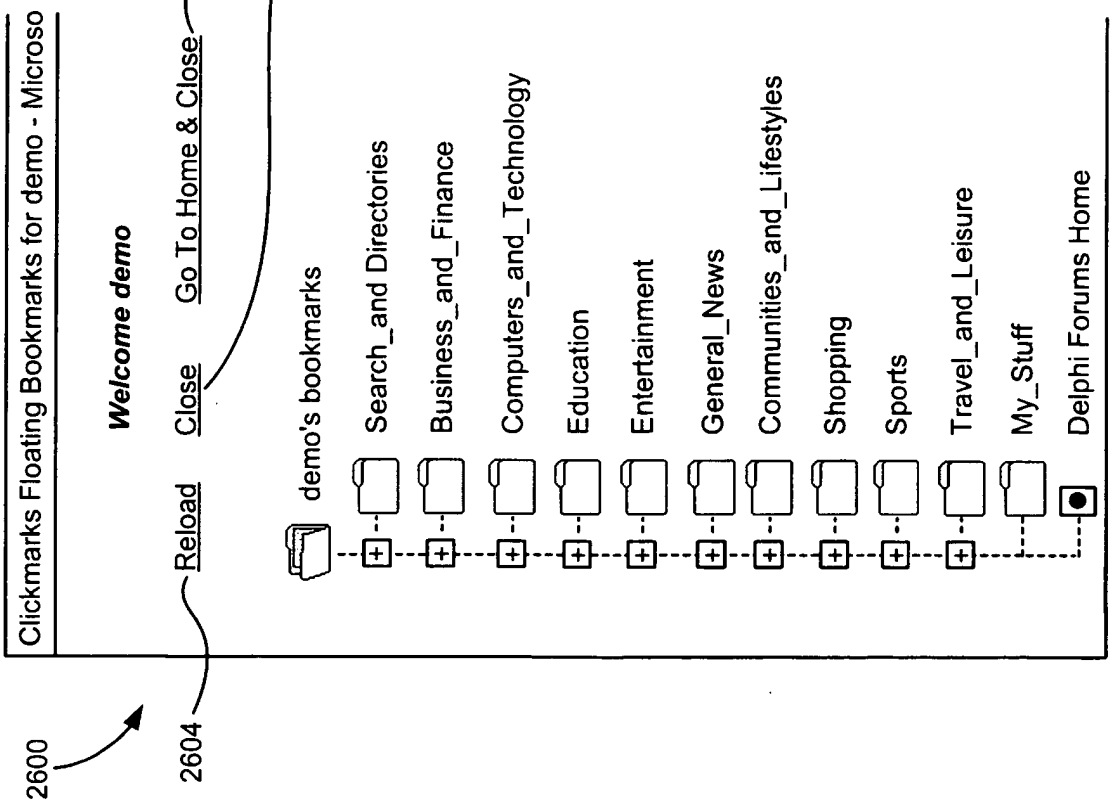
2600
2604
Clickmarks Floating Bookmarks for demo - Microso
Welcome demo
Reload
Close
Go To Home & Close
2602
2606
demo's bookmarks
Search_and Directories
Business_and_Finance
Computers_and_Technology
Education
Entertainment
General_News
Communities_and_Lifestyles
Shopping
Sports
Travel_and_Leisure
My_Stuff
Delphi Forums Home

Figure 26

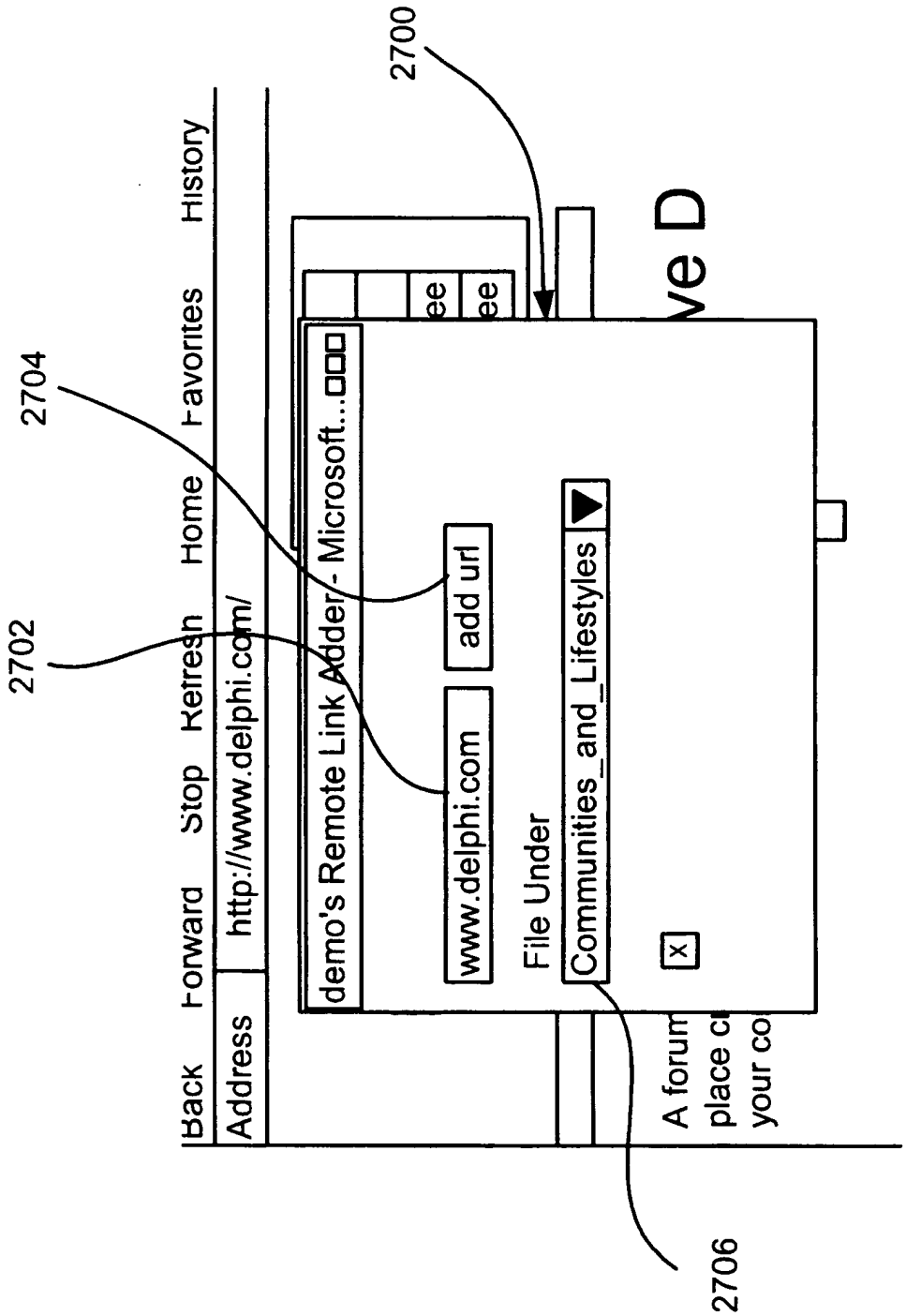
2700
2704
2702
2706
Back
Forward
Stop
Refresh
Home
Favorites
History
Address
http://www.delphi.com/
demo's Remote Link Adder - Microsoft...
add url
www.delphi.com
File Under
Communities_and_Lifestyles
A forum
place c
your co

Figure 27

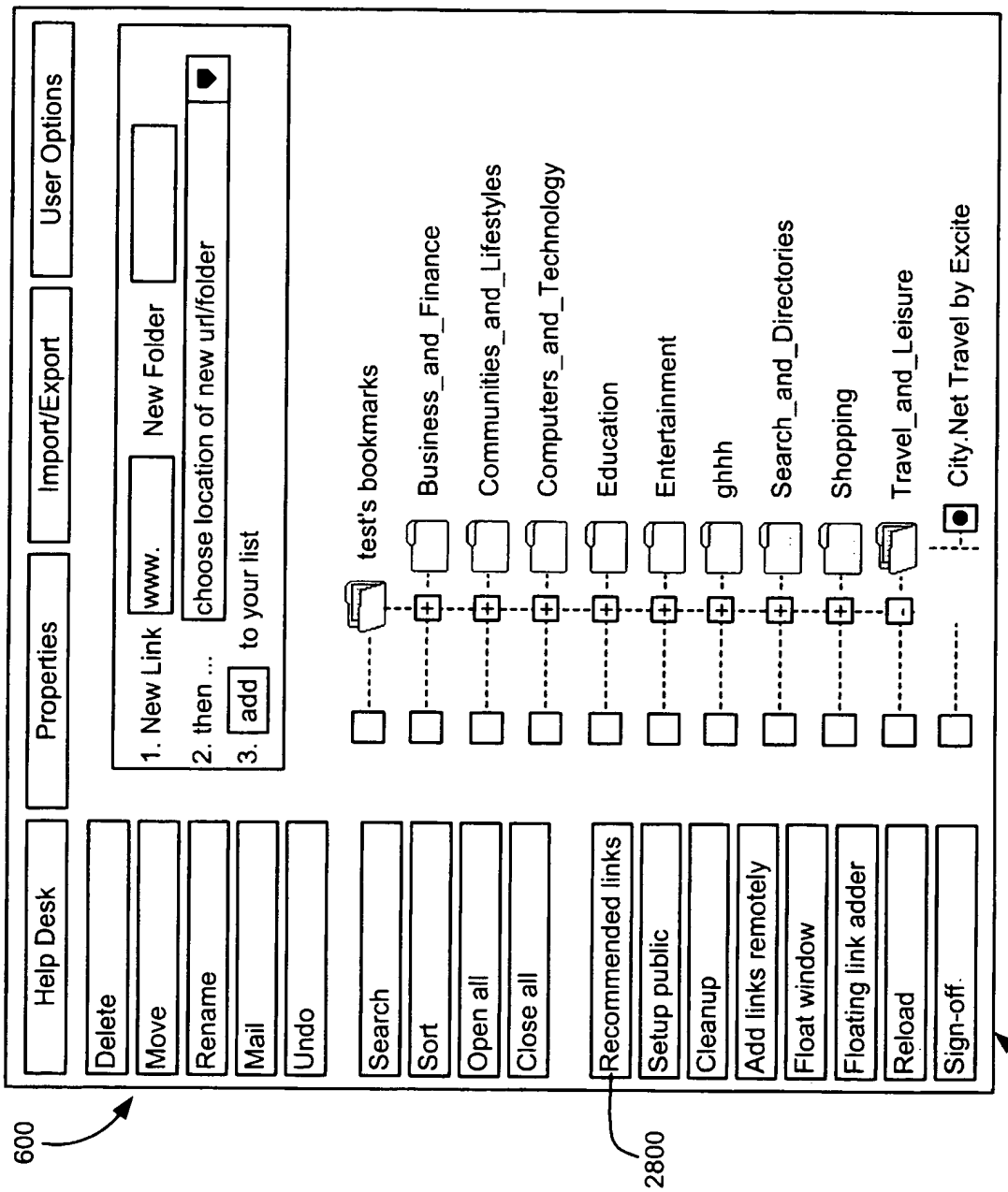
Help Desk
Properties
Import/Export
User Options
Delete
Move
Rename
Mail
Undo
1. New Link
www.
New Folder
2. then ...
choose location of new url/folder
3. add
to your list
Search
Sort
Open all
Close all
Recommended links
Setup public
Cleanup
Add links remotely
Float window
Floating link adder
Reload
Sign-off
test's bookmarks
Business_and_Finance
Communities_and_Lifestyles
Computers_and_Technology
Education
Entertainment
ghhh
Search_and_Directories
Shopping
Travel_and_Leisure
City.Net Travel by Excite
600
2800
604

Figure 28

Hot List

Hot Search Sites
Looksmart
Yahoo!
Excite
Jayde.com
Mamma.com - The Mother of All Search Engines
Ask Jeeves
Northern Light
Dogpile

Hot Directories Sites
Bigfoot
Four11
WhoWhere?
Switchboard
Infospace.com

Hot Business Sites
Business Week
CNNfn
Edgar Online
Monster Board Job Database
Headhunter.net
Fast Company

Hot Finance Sites
StockMaster
The Motley Fool: Finance and Folly
Yahoo! Finance
Bloomberg Online
Quote.com
Quicken Financial Network
OANDA Currency Converters
The Street
E*TRADE
IRS Homepage

Hot Computers_and_Technology Sites
W3C - The World Wide Web Consortium
Developer.com - Resources for programmers and developers
CMP TechWeb
Internet Sourcebook

Figure 29

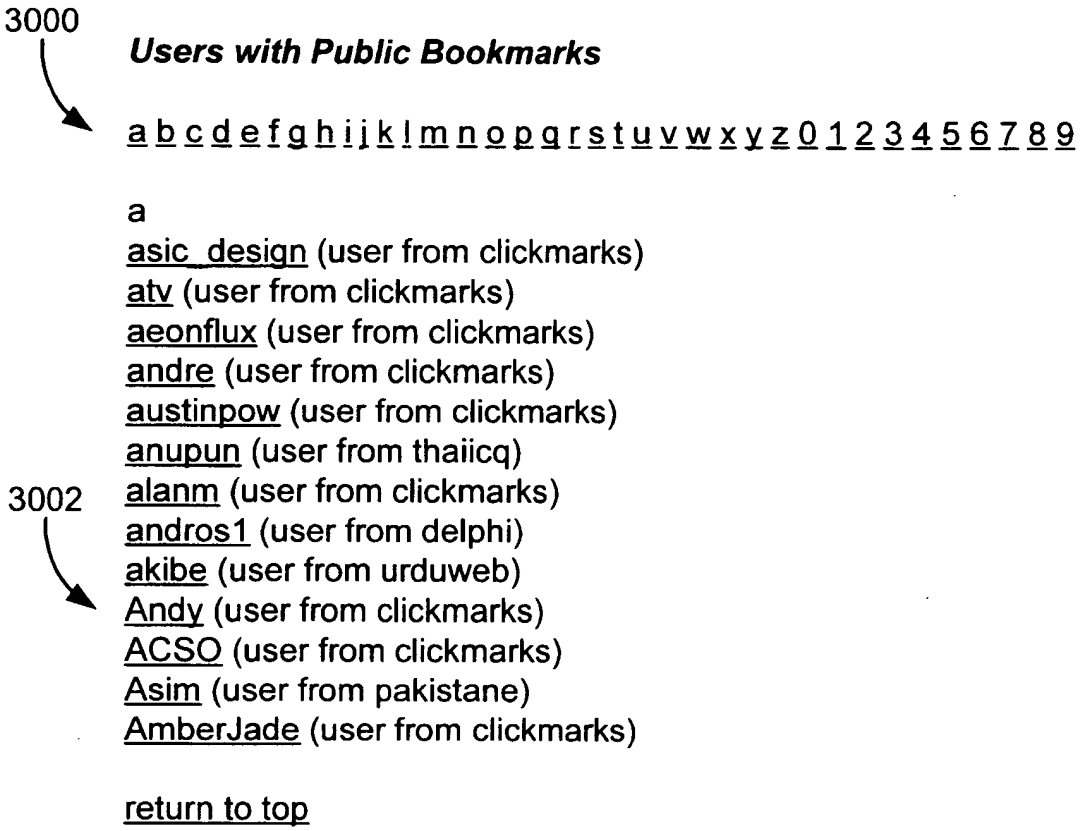
3000
Users with Public Bookmarks
a b c d e f g h i j k l m n o p q r s t u v w x y z 0 1 2 3 4 5 6 7 8 9
a
asic_design (user from clickmarks)
atv (user from clickmarks)
aeonflux (user from clickmarks)
andre (user from clickmarks)
austinpow (user from clickmarks)
anupun (user from thaiicq)
3002
alanm (user from clickmarks)
andros1 (user from delphi)
akibe (user from urduweb)
Andy (user from clickmarks)
ACSO (user from clickmarks)
Asim (user from pakistane)
AmberJade (user from clickmarks)
return to top

Figure 30

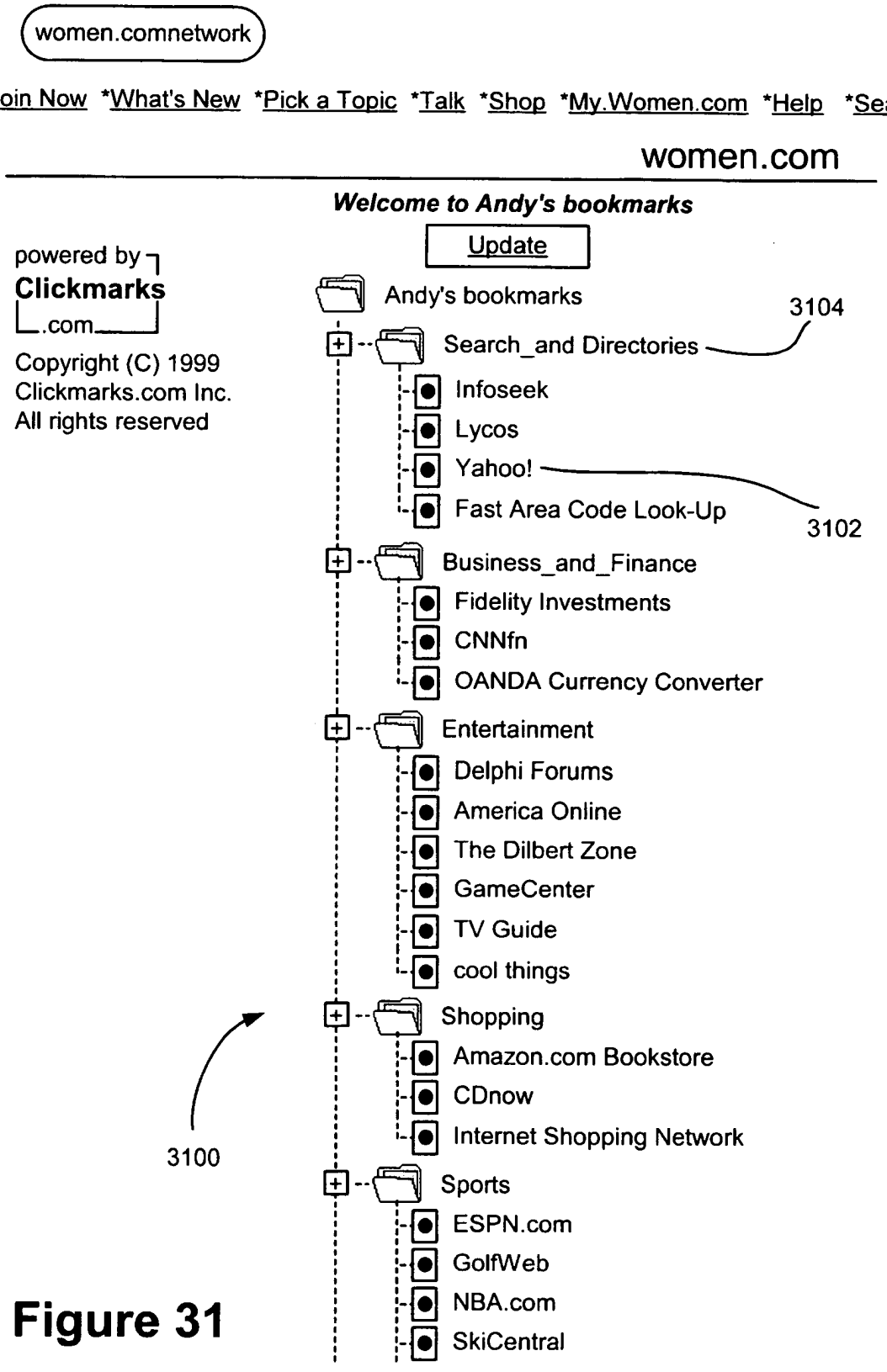
women.comnetwork
*Join Now *What's New *Pick a Topic *Talk *Shop *My.Women.com *Help *Search
women.com
Welcome to Andy's bookmarks
Update
powered by Clickmarks .com
Copyright (C) 1999 Clickmarks.com Inc. All rights reserved
Andy's bookmarks
Search_and Directories
Infoseek
Lycos
Yahoo!
Fast Area Code Look-Up
Business_and_Finance
Fidelity Investments
CNNfn
OANDA Currency Converter
Entertainment
Delphi Forums
America Online
The Dilbert Zone
GameCenter
TV Guide
cool things
Shopping
Amazon.com Bookstore
CDnow
Internet Shopping Network
Sports
ESPN.com
GolfWeb
NBA.com
SkiCentral
3100
3102
3104

Figure 31

SYSTEM METHOD AND ARTICLE OF MANUFACTURE FOR DYNAMICALLY USER-GENERATED INTERNET SEARCH DIRECTORY BASED ON PRIORITIZED SERVER-SIDED USER BOOKMARKS

FIELD OF THE INVENTION

The present invention relates to internet website directories and more particularly to dynamically user generated internet search directories based on prioritized server-sided user bookmarks.

BACKGROUND OF THE INVENTION

The World Wide Web was initially developed at CERN, which is a particle physics laboratory based in Geneva in Switzerland. The initial work began in 1989 and centered on the development of the HyperText Transmission Protocol (HTTP), which is a network protocol for requesting and transmitting web files and documents which both web servers and browsers can understand. By December 1990, CERN had developed a web server, a text-based browser and a browser for NExTStep computers. In March 1991, the software for the text based browser was made available to a limited audience. In January 1992, an updated version of the browser (version 1.1) was made freely available on the Internet. By January 1993, there were 50 web servers in existence and freely available graphical browser software had been made available for the Apple Macintosh. By February 1993, the World Wide Web was accounting for 0.1 percent of all Internet traffic.

One factor in the rapid acceptance and growth of the World Wide Web was the work done at the National Center for Supercomputer Applications (NCSA) at the University of Illinois in Urbana-Champaign in the USA. Their Software Development Group created a graphical web browser called Mosaic. In September 1993, they released versions of this software for Microsoft Windows running on PCs, Apple Macintoshes and Unix computers running X Windows. Each of the versions looked at and handled files in a very similar manner with images and text interspaced in the same document, allowing organizations to create visually exciting documents that could be viewed in very similar formats on the three main types of computer in use at that time.

Many members of the team who developed the original versions of Mosaic now work for Netscape Communications Corporation, a company which has developed the Netscape Web browser, which was estimated to account for around 70 percent of all the Web browsers in use in May 1995. Following Netscape, Microsoft launched a range of Internet browsers and servers.

A directory is, in general, an approach to organizing information, the most familiar example being a telephone directory. On the World Wide Web, a Internet search directory (also known as a web directory) is a subject guide, typically organized by major topics and subtopics. There are many Internet search directories, from the mega search directories such as Yahoo (www.yahoo.com) and Lycos (www.lycos.com) with millions of links to small niche directories such as South Asia Milan (www.samilan.com). These directories are structured as a multilevel tree of categories and subcategories, with website links, titles and possibly descriptions within subcategories, usually at the "leaf nodes" (final level subcategories).

There are several shortcomings with the implementations of such types of search directories. A web directory is typically compiled by listing any and all sites submitted for inclusion under a category by their webmaster. Quality assurance relating to the usefulness of a site to a visitor is usually either largely skipped or handled cursorily by the web directory administrator. Also, users of such directories are restricted to the categorization set once and for all by the webmaster. Because of this, users wishing to add sites to such directories are unable create their own custom category under which to put a new site.

SUMMARY OF THE INVENTION

A system, method and article of manufacture are provided for generating a prioritized network site directory. A link to a site on a network is generated. The site is then added to a site directory that includes a set of categories. The site is categorized into one of the categories of the site directory. The site is also ranked in the category.

In an embodiment of the present invention, the addition of the site to the site directory may also require the comparing of the site to pre-existing sites in the site directory and then generating a notification if the site matches one of the pre-existing sites of the site directory. In another embodiment of the present invention, categorizing of the site into one of the categories of the site directory may also include generating a table of sites where pre-existing site are ranked in the set of categories of the set directory and then determining whether the site exists in the table of sites. If the site already exists in the table of sites, the site may then be mapped to one of the categories of the set of categories. Further, if the site does not exist in the table of sites, the site may be searched for keywords relating to the categories of the set of categories.

In a further embodiment of the present invention, categorization of the site into one of the categories of the site directory may also include the selecting one of the categories into which the site is to be categorized and then comparing the selected category to the category to which the site is mapped. If the selected category does not match the category to which the site is mapped, then a notification may be generated.

In an aspect of the present invention, the site may be ranked in the category according to: the number of generated links to the site, the frequency that the site is accessed by selection of the generated links, and/or polling. In another aspect of the present invention, a mode of communication may be associated with one or more of the categories of the site directory.

In a further embodiment of the present invention, a sub-category may be created into which the site is categorized under one of the categories of the site directory. An added option to this embodiment, a creator identity may be assigned to the sub-category that includes information about a creator of the sub-category. In such an option, the creator of the sub-category may further be granted privileges such as recommending to accept or reject additional sites into and additional sub-categories under the sub-category, receiving information transmittals from users of site in the sub-category, and transmitting information to users of sites in the sub-category.

BRIEF DESCRIPTION OF THE DRAWINGS

The invention will be better understood when consideration is give to the following detailed description thereof Such description makes reference to the annexed drawings wherein:

FIG. 1 is a schematic diagram of a hardware implementation of an embodiment of the present invention:

FIG. **2** illustrates a flowchart for a method for generating a prioritized network site directory from user generated links to sites on a network in accordance with an embodiment of the present invention;

FIG. **3** is a schematic illustration illustrating the creation of an exemplary website directory derived from bookmarks submitted from users' online bookmark accounts in accordance with an embodiment of the present invention;

FIG. **4** is a schematic illustration of an exemplary embodiment of a website directory with sites categorized in user created and defined categories and subcategories in accordance with an embodiment of the present invention;

FIG. **5** is a schematic illustration of an exemplary website directory where the sites of a category are displayed with their rankings according to number of users who have the site bookmarked, frequency that the site is visited by users, and popularity determined by user voting in accordance with an embodiment of the present invention;

FIG. **6** illustrates an exemplary display of a online bookmark account page of a user in accordance with an embodiment of the present invention;

FIG. **7** illustrates tools displayed on a user's online bookmark account page in accordance with an embodiment of the present invention;

FIG. **8** illustrates an exemplary online bookmark account page with drop and drag capability in accordance with an embodiment of the present invention;

FIG. **9** illustrates a remote addition feature for adding bookmarks to a user's online bookmark account page in accordance with an embodiment of the present invention;

FIG. **10** illustrates an importation feature of an online bookmark account page for importing Internet browser bookmarks or favorites into the online bookmark account page in accordance with an embodiment of the present invention;

FIG. **11** illustrates a user's online bookmark account page and a public bookmark page derived from the online bookmark account page in accordance with an embodiment of the present invention;

FIG. **12** illustrates a direct addition of a bookmark to an online bookmark account page in accordance with an embodiment of the present invention;

FIG. **13** illustrates a remote addition of a bookmark to an online bookmark account page in accordance with an embodiment of the present invention;

FIG. **14** illustrates a Floating Link Adder pop-up window for adding bookmarks to an online bookmark account in accordance with an embodiment of the present invention;

FIG. **15** illustrates an online bookmark account and, in particular, features for creating a folder in accordance with an embodiment of the present invention;

FIG. **16** illustrates portion for an online bookmark account while deleting a bookmark or folder from the online bookmark account in accordance with an embodiment of the present invention;

FIG. **17** illustrates portion for an online bookmark account while moving a folder in the online bookmark account in accordance with an embodiment of the present invention;

FIG. **18** illustrates portion for an online bookmark account used for renaming a folder in the online bookmark account in accordance with an embodiment of the present invention;

FIG. **19** illustrates a display for automatic importing of bookmarks into a user's online bookmark account in accordance with an embodiment of the present invention;

FIG. **20** illustrates a display displayed upon a selection for exporting bookmarks from a user's online bookmark account in accordance with an embodiment of the present invention;

FIG. **21** illustrates a dialog box for a search feature for keyword searching of bookmarks in a user's online bookmark account in accordance with an embodiment of the present invention;

FIG. **22** illustrates a dialog box for a sort feature for sorting bookmarks in a user's online bookmark account in accordance with an embodiment of the present invention;

FIG. **23** illustrates a dialog box for a cleanup feature for checking for stale and duplicate bookmarks in a user's online bookmark account in accordance with an embodiment of the present invention;

FIG. **24** illustrates a portion of a frame of an e-mail feature of a user's online bookmark account in accordance with an embodiment of the present invention;

FIG. **25** illustrates a portion of a frame for making a user's private bookmarks public and a user's public bookmarks private in accordance with an embodiment of the present invention;

FIG. **26** illustrates a Float Window in accordance with an embodiment of the present invention;

FIG. **27** illustrates a Floating Link Adder Pop-up Window in accordance with an embodiment of the present invention;

FIG. **28** illustrates an exemplary display of a online bookmark account page of a user with a button for a recommended links feature in accordance with an embodiment of the present invention;

FIG. **29** illustrates a page displaying a list of popular sites displayed subsequent the selection of the recommended links feature in accordance with an embodiment of the present invention;

FIG. **30** illustrates a page displaying a list of users with public bookmarks in accordance with an embodiment of the present invention;

FIG. **31** illustrates an exemplary welcome page a particular user's public bookmarks in accordance with an embodiment of the present invention;

DETAILED DESCRIPTION OF THE INVENTION

FIG. **1** is a schematic diagram of one possible hardware implementation by which the present invention may be carried out. As shown, the present invention may be practiced in the context of a personal computer such as an IBM compatible personal computer, Apple Macintosh computer or UNIX based workstation.

A representative hardware environment is depicted in FIG. **1**, which illustrates a typical hardware configuration of a workstation in accordance with one embodiment having a central processing unit **110**, such as a microprocessor, and a number of other units interconnected via a system bus **112**. The workstation shown in FIG. **1** includes a Random Access Memory (RAM) **114**, Read Only Memory (ROM) **116**, an I/O adapter **118** for connecting peripheral devices such as disk storage units **120** to the bus **112**, a user interface adapter **122** for connecting a keyboard **124**, a mouse **126**, a speaker **128**, a microphone **132**, and/or other user interface devices such as a touch screen (not shown) to the bus **112**, communication adapter **134** for connecting the workstation to a communication network **135** (e.g., a data processing network) and a display adapter **136** for connecting the bus **112** to a display device **138**.

The workstation typically has resident thereon an operating system such as the Microsoft Windows NT or Windows/95 Operating System (OS), the IBM OS/2 operating system, the MAC OS, or UNIX operating system. Those skilled in the art will appreciate that the present invention may also be implemented on other platforms and operating systems.

A preferred embodiment of the present invention is written using JAVA, C, and the C++ language and utilizes object oriented programming methodology. Object oriented programming (OOP) has become increasingly used to develop complex applications. As OOP moves toward the mainstream of software design and development, various software solutions require adaptation to make use of the benefits of OOP.

OOP is a process of developing computer software using objects, including the steps of analyzing the problem, designing the system, and constructing the program. An object is a software package that contains both data and a collection of related structures and procedures. Since it contains both data and a collection of structures and procedures, it can be visualized as a self-sufficient component that does not require other additional structures, procedures or data to perform its specific task. OOP, therefore, views a computer program as a collection of largely autonomous components, called objects, each of which is responsible for a specific task. This concept of packaging data, structures, and procedures together in one component or module is called encapsulation.

In general, OOP components are reusable software modules which present an interface that conforms to an object model and which are accessed at run-time through a component integration architecture. A component integration architecture is a set of architecture mechanisms which allow software modules in different process spaces to utilize each others capabilities or functions. This is generally done by assuming a common component object model on which to build the architecture. It is worthwhile to differentiate between an object and a class of objects at this point. An object is a single instance of the class of objects, which is often just called a class. A class of objects can be viewed as a blueprint, from which many objects can be formed.

OOP allows the programmer to create an object that is a part of another object. For example, the object representing a piston engine is said to have a composition-relationship with the object representing a piston. In reality, a piston engine comprises a piston, valves and many other components; the fact that a piston is an element of a piston engine can be logically and semantically represented in OOP by two objects.

OOP also allows creation of an object that "depends from" another object. If there are two objects, one representing a piston engine and the other representing a piston engine wherein the piston is made of ceramic, then the relationship between the two objects is not that of composition. A ceramic piston engine does not make up a piston engine. Rather it is merely one kind of piston engine that has one more limitation than the piston engine; its piston is made of ceramic. In this case, the object representing the ceramic piston engine is called a derived object, and it inherits all of the aspects of the object representing the piston engine and adds further limitation or detail to it. The object representing the ceramic piston engine "depends from" the object representing the piston engine. The relationship between these objects is called inheritance.

When the object or class representing the ceramic piston engine inherits all of the aspects of the objects representing the piston engine, it inherits the thermal characteristics of a standard piston defined in the piston engine class. However, the ceramic piston engine object overrides these ceramic specific thermal characteristics, which are typically different from those associated with a metal piston. It skips over the original and uses new functions related to ceramic pistons. Different kinds of piston engines have different characteristics, but may have the same underlying functions associated with it (e.g., how many pistons in the engine, ignition sequences, lubrication, etc.). To access each of these functions in any piston engine object, a programmer would call the same functions with the same names, but each type of piston engine may have different/overriding implementations of functions behind the same name. This ability to hide different implementations of a function behind the same name is called polymorphism and it greatly simplifies communication among objects.

With the concepts of composition-relationship, encapsulation, inheritance and polymorphism, an object can represent just about anything in the real world. In fact, our logical perception of the reality is the only limit on determining the kinds of things that can become objects in object-oriented software. Some typical categories are as follows:

- Objects can represent physical objects, such as automobiles in a traffic-flow simulation, electrical components in a circuit-design program, countries in an economics model, or aircraft in an air-traffic-control system.
- Objects can represent elements of the computer-user environment such as windows, menus or graphics objects.
- An object can represent an inventory, such as a personnel file or a table of the latitudes and longitudes of cities.
- An object can represent user-defined data types such as time, angles, and complex numbers, or points on the plane.

With this enormous capability of an object to represent just about any logically separable matters, OOP allows the software developer to design and implement a computer program that is a model of some aspects of reality, whether that reality is a physical entity, a process, a system, or a composition of matter. Since the object can represent anything, the software developer can create an object which can be used as a component in a larger software project in the future.

If 90% of a new OOP software program consists of proven, existing components made from preexisting reusable objects, then only the remaining 10% of the new software project has to be written and tested from scratch. Since 90% already came from an inventory of extensively tested reusable objects, the potential domain from which an error could originate is 10% of the program. As a result, OOP enables software developers to build objects out of other, previously built objects.

This process closely resembles complex machinery being built out of assemblies and sub-assemblies. OOP technology, therefore, makes software engineering more like hardware engineering in that software is built from existing components, which are available to the developer as objects. All this adds up to an improved quality of the software as well as an increased speed of its development.

Programming languages are beginning to fully support the OOP principles, such as encapsulation, inheritance, polymorphism, and composition-relationship. With the advent of the C++ language, many commercial software developers have embraced OOP. C++ is an OOP language that offers a fast, machine-executable code.

Furthermore, C++ is suitable for both commercial-application and systems-programming projects. For now, C++ appears to be the most popular choice among many OOP programmers, but there is a host of other OOP languages, such as Smalltalk, Common Lisp Object System (CLOS), and Eiffel. Additionally, OOP capabilities are being added to more traditional popular computer programming languages such as Pascal.

The benefits of object classes can be summarized, as follows:

- Objects and their corresponding classes break down complex programming problems into many smaller, simpler problems.
- Encapsulation enforces data abstraction through the organization of data into small, independent objects that can communicate with each other. Encapsulation protects the data in an object from accidental damage, but allows other objects to interact with that data by calling the object's member functions and structures.
- Subclassing and inheritance make it possible to extend and modify objects through deriving new kinds of objects from the standard classes available in the system. Thus, new capabilities are created without having to start from scratch.
- Polymorphism and multiple inheritance make it possible for different programmers to mix and match characteristics of many different classes and create specialized objects that can still work with related objects in predictable ways.
- Class hierarchies and containment hierarchies provide a flexible mechanism for modeling real-world objects and the relationships among them.
- Libraries of reusable classes are useful in many situations, but they also have some limitations. For example:
- Complexity. In a complex system, the class hierarchies for related classes can become extremely confusing, with many dozens or even hundreds of classes.
- Flow of control. A program written with the aid of class libraries is still responsible for the flow of control (i.e., it must control the interactions among all the objects created from a particular library). The programmer has to decide which functions to call at what times for which kinds of objects.
- Duplication of effort. Although class libraries allow programmers to use and reuse many small pieces of code, each programmer puts those pieces together in a different way. Two different programmers can use the same set of class libraries to write two programs that do exactly the same thing but whose internal structure (i.e., design) may be quite different, depending on hundreds of small decisions each programmer makes along the way. Inevitably, similar pieces of code end up doing similar things in slightly different ways and do not work as well together as they should.

Class libraries are very flexible. As programs grow more complex, more programmers are forced to reinvent basic solutions to basic problems over and over again. A relatively new extension of the class library concept is to have a framework of class libraries. This framework is more complex and consists of significant collections of collaborating classes that capture both the small scale patterns and major mechanisms that implement the common requirements and design in a specific application domain. They were first developed to free application programmers from the chores involved in displaying menus, windows, dialog boxes, and other standard user interface elements for personal computers.

Frameworks also represent a change in the way programmers think about the interaction between the code they write and code written by others. In the early days of procedural programming, the programmer called libraries provided by the operating system to perform certain tasks, but basically the program executed down the page from start to finish, and the programmer was solely responsible for the flow of control. This was appropriate for printing out paychecks, calculating a mathematical table, or solving other problems with a program that executed in just one way.

The development of graphical user interfaces began to turn this procedural programming arrangement inside out. These interfaces allow the user, rather than program logic, to drive the program and decide when certain actions should be performed. Today, most personal computer software accomplishes this by means of an event loop which monitors the mouse, keyboard, and other sources of external events and calls the appropriate parts of the programmer's code according to actions that the user performs. The programmer no longer determines the order in which events occur. Instead, a program is divided into separate pieces that are called at unpredictable times and in an unpredictable order. By relinquishing control in this way to users, the developer creates a program that is much easier to use. Nevertheless, individual pieces of the program written by the developer still call libraries provided by the operating system to accomplish certain tasks, and the programmer must still determine the flow of control within each piece after it's called by the event loop. Application code still "sits on top of" the system.

Even event loop programs require programmers to write a lot of code that should not need to be written separately for every application. The concept of an application framework carries the event loop concept further. Instead of dealing with all the nuts and bolts of constructing basic menus, windows, and dialog boxes and then making these things all work together, programmers using application frameworks start with working application code and basic user interface elements in place. Subsequently, they build from there by replacing some of the generic capabilities of the framework with the specific capabilities of the intended application.

Application frameworks reduce the total amount of code that a programmer has to write from scratch. However, because the framework is really a generic application that displays windows, supports copy and paste, and so on, the programmer can also relinquish control to a greater degree than event loop programs permit. The framework code takes care of almost all event handling and flow of control, and the programmer's code is called only when the framework needs it (e.g., to create or manipulate a proprietary data structure).

A programmer writing a framework program not only relinquishes control to the user (as is also true for event loop programs), but also relinquishes the detailed flow of control within the program to the framework. This approach allows the creation of more complex systems that work together in interesting ways, as opposed to isolated programs, having custom code, being created over and over again for similar problems.

Thus, as is explained above, a framework basically is a collection of cooperating classes that make up a reusable design solution for a given problem domain. It typically includes objects that provide default behavior (e.g., for menus and windows), and programmers use it by inheriting some of that default behavior and overriding other behavior so that the framework calls application code at the appropriate times.

There are three main differences between frameworks and class libraries:

Behavior versus protocol. Class libraries are essentially collections of behaviors that one can call when one wants those individual behaviors in a program. A framework, on the other hand, provides not only behavior but also the protocol or set of rules that govern the ways in which behaviors can be combined, including rules for what a programmer is supposed to provide versus what the framework provides.

Call versus override. With a class library, the code the programmer instantiates objects and calls their member functions. It's possible to instantiate and call objects in the same way with a framework (i.e., to treat the framework as a class library), but to take full advantage of a framework's reusable design, a programmer typically writes code that overrides and is called by the framework. The framework manages the flow of control among its objects. Writing a program involves dividing responsibilities among the various pieces of software that are called by the framework rather than specifying how the different pieces should work together.

Implementation versus design. With class libraries, programmers reuse only implementations, whereas with frameworks, they reuse design. A framework embodies the way a family of related programs or pieces of software work. It represents a generic design solution that can be adapted to a variety of specific problems in a given domain. For example, a single framework can embody the way a user interface works, even though two different user interfaces created with the same framework might solve quite different interface problems.

Thus, through the development of frameworks for solutions to various problems and programming tasks, significant reductions in the design and development effort for software can be achieved. A preferred embodiment of the invention utilizes HyperText Markup Language (HTML) to implement documents on the Internet together with a general-purpose secure communication protocol for a transport medium between the client and the Newco. HTTP or other protocols could be readily substituted for HTML without undue experimentation. Information on these products is available in T. Berners-Lee, D. Connoly, "RFC 1866: Hypertext Markup Language-2.0" (November 1995); and R. Fielding, H. Frystyk, T. Berners-Lee, J. Gettys and J. C. Mogul, "Hypertext Transfer Protocol—HTTP/1.1: HTTP Working Group Internet Draft" (May 2, 1996). HTML is a simple data format used to create hypertext documents that are portable from one platform to another. HTML documents are SGML documents with generic semantics that are appropriate for representing information from a wide range of domains. HTML has been in use by the World-Wide Web global information initiative since 1990. HTML is an application of ISO Standard 8879; 1986 Information Processing Text and Office Systems; Standard Generalized Markup Language (SGML).

To date, Web development tools have been limited in their ability to create dynamic Web applications which span from client to server and interoperate with existing computing resources. Until recently, HTML has been the dominant technology used in development of Web-based solutions. However, HTML has proven to be inadequate in the following areas:

Poor performance;

Restricted user interface capabilities;

Can only produce static Web pages;

Lack of interoperability with existing applications and data; and

Inability to scale.

Sun Microsystem's Java language solves many of the client-side problems by:

Improving performance on the client side;

Enabling the creation of dynamic, real-time Web applications; and

Providing the ability to create a wide variety of user interface components.

With Java, developers can create robust User Interface (UI) components. Custom "widgets" (e.g., real-time stock tickers, animated icons, etc.) can be created, and client-side performance is improved. Unlike HTML, Java supports the notion of client-side validation, offloading appropriate processing onto the client for improved performance. Dynamic, real-time Web pages can be created. Using the above-mentioned custom UI components, dynamic Web pages can also be created.

Sun's Java language has emerged as an industry-recognized language for "programming the Internet." Sun defines Java as: "a simple, object-oriented, distributed, interpreted, robust, secure, architecture-neutral, portable, high-performance, multithreaded, dynamic, buzzword-compliant, general-purpose programming language. Java supports programming for the Internet in the form of platform-independent Java applets." Java applets are small, specialized applications that comply with Sun's Java Application Programming Interface (API) allowing developers to add "interactive content" to Web documents (e.g., simple animations, page adornments, basic games, etc.). Applets execute within a Java-compatible browser (e.g., Netscape Navigator) by copying code from the server to client. From a language standpoint, Java's core feature set is based on C++. Sun's Java literature states that Java is basically, "C++ with extensions from Objective C for more dynamic method resolution."

Another technology that provides similar function to JAVA is provided by Microsoft and ActiveX Technologies, to give developers and Web designers wherewithal to build dynamic content for the Internet and personal computers. ActiveX includes tools for developing animation, 3-D virtual reality, video and other multimedia content. The tools use Internet standards, work on multiple platforms, and are being supported by over 100 companies. The group's building blocks are called ActiveX Controls, small, fast components that enable developers to embed parts of software in hypertext markup language (HTML) pages. ActiveX Controls work with a variety of programming languages including Microsoft Visual C++, Borland Delphi, Microsoft Visual Basic programming system and, in the future, Microsoft's development tool for Java, code named "Jakarta." ActiveX Technologies also includes ActiveX Server Framework, allowing developers to create server applications. One of ordinary skill in the art readily recognizes that ActiveX could be substituted for JAVA without undue experimentation to practice the invention.

User-Generated Internet Search Directory Based on User Online Bookmarks

Users surf the Internet at an ever increasing rate and webpages get added to the World Wide Web at an exorbitant rate. The ability to bookmark a webpage or website that a user found particularly useful is an invaluable aid to surfing the web efficiently. The value of a bookmark to the user who owns it is clear. But there is an additional value attached to

the bookmarking of a site. A bookmark is the result of an analysis of and positive judgment on a website by a visitor interested in a particular interest topic. However, the knowledge that a site is good enough to be bookmarked is locked away in a user's private bookmark set. Creating a web directory where each category contains not just sites recommended for listing by webmasters, but sites taken from within Internet user's bookmarks sets, unlocks the knowledge hidden away in private bookmarks sets distributed across standalone computers worldwide. Users are be able to search via keyword or traverse the category hierarchy to get to bookmarks pertaining to their area of interest.

The present invention includes the following concepts for implementing a searchable web directories:

Search Domain: The domain of links/websites categorized in the directory comprising of users' bookmarks

Dynamic restructuring: The user has the ability to create their own categories to best identify the location of their bookmark(s) within the web directory.

Site Ranking: Each bookmark may be ranked by: (a) the number of people who have bookmarked the site, and (b) the frequency of access to this site by the bookmarkers.

Category guides and owners: Each category created by the user as well as each link added by users from their bookmark set may be associated with the user's name, allowing users to find not only relevant sites but people with similar interests

FIG. **2** illustrates a flowchart for a method **200** for generating a prioritized network site directory from user generated links to sites on a network (see operation **202**). The site related to the link is added to a site directory that includes a set of categories in operation **204**. The site is categorized into one of the categories of the site directory in operation **206** and also ranked in the particular category that it is placed under in operation **208**.

Search Domain

FIG. **3** is a schematic illustration illustrating the creation of an exemplary website directory **300** of the present invention derived from bookmarks submitted from users' online bookmark accounts **302***a*, **302***b*, **302***c*. In the present invention, sites **304** added to the web directory **300** exist as bookmarks **306** in a user's bookmark set of the user's online bookmark account. Thus, the only people allowed to add links to the web directory are users who host their bookmarks or favorite sites in online bookmark accounts **302***a*, **302***b*, **302***c* on an online bookmark management server. This also helps to eliminate the "spamming" of the web directory by overzealous webmasters. A user first registers with the online bookmark management service and import their browser bookmarks, or favorite links off an existing webpage. Optionally, a user may create a fresh set of bookmarks in their server based bookmarks account. Once the user has a server side bookmark account set up and populated, the user may add part or all of the user's bookmarks to the web directory as represented in FIG. **3** by arrows **308***a*, **308***b*, and **308***c*. The user may choose manual or automatic categorization while adding part or all of their bookmark.

Manual Categorization

Under manual categorization, the user determines the category **310***a*, **310***b*, **310***c* under which to file a bookmark or a set of bookmarks. These bookmarks as well as the suggested categorization are reviewed by the directory's editorial staff for correctness of categorization. After this screening, the sites are made part of the directory under the user recommended category or a editor selected classification, and the user is notified.

Automatic Categorization

In automatic categorization, the user may specify which part of the user's bookmark set is to be included in the directory. All unique links in this set that do not already exist in the directory are then considered for addition under categories determined by the staff. With automatic categorization, the user does not have to determine and submit the appropriate categorization of the submitted bookmarks.

Website Addition

The website addition process may automated with at least two manners. First, an automatic filtering step may be executed to determine whether the submitted link already exists in the search directory. In this step, the submitted site is compared to pre-existing sites in the site directory to see if it matches one of the pre-existing sites of the site directory. As an option, if the user attempts to add a link manually under a category, the user may be alerted (by for example the generation of a notification to the user) when the link already exists in that category or even elsewhere in the directory. After such an alter, the user may be allowed a choice to proceed and submit the link. A final determination on whether to replicate links across categories may subsequently then be made by the editorial staff.

NEED MORE INFORMATION ON THIS ASPECT

Second, in the determination of the right categorization, the editorial staff may be aided by a website profiling procedure. The website profiling algorithm will be similar to the interest clustering techniques detailed in the patent "Method and Apparatus User Preference Profiling and Transient Detection on Content and User Access of Web Bookmarks", filed separately.

Each bookmarked website submitted to the directory (manual or automatic submission) is looked up in a generated table of sites that have been ranked in a set of categories. This ranking is done using the interest clustering algorithm mentioned above. If the site exists in the table, its ranking is then mapped to the best category for it to be listed under. On the other hand, if the site does not exist in the table, the interest clustering engine is used to search the site on a variety of keyword baskets. Each keyword basket represents a particular interest category. The results from this search are then entered into the table of ranked sites and used to determine the final categorization of the site in the web directory. As an option, if the selected category does not match the category to which the site is mapped, then a notification may be generated. As a further option, manual inspection by the editorial staff may also be conducted as a double check of the categorization procedure.

Dynamic Restructuring

FIG. **4** is a schematic illustration of an exemplary embodiment of a website directory **300** of the present invention with sites **304** categorized in user created and defined categories **310***a*, **310***b* and subcategories **312***a*, **312***b*. In such an embodiment of the present invention, a sub-category may be created into which the site is categorized under one of the categories of the site directory. In adding niche and focused sites to a web directory, a major stumbling block has been the lack of flexibility for permitting users to make their own custom categories under which to add a favorite site. The present invention gives a user the ability to dynamically grow the hierarchical categorization tree. In the case of a

bookmark based website directory, one of the underlying assumptions of such a search metaphor is that the user adding the bookmark has a keen interest in and some knowledge of the theme and/or subject of the bookmarked site.

In order to exploit this user knowledge properly, the user is allowed the option to grow the categorization tree by adding "nodes" or "subcategories" that best capture the category for the bookmarks they wish to add. Each added node may have the creator's ID (i.e., the user's online bookmarks account's username) and contain at least one site under it (i.e., users may not be able create an empty node). These features also create a dynamic interactive web directory. "Dynamic" here does not simply imply frequent addition of links, but frequent additions to the basic categorization structure.

These features may also be conducted under the manual inspection of the editorial staff. In such an embodiment, requests from a user to create a new node in the category tree may be queued for approval by an editor of the site directory. If the new sub-category is found to add value to the web directory, its addition is then finalized and included in the site directory.

Site Ranking

FIG. **5** is a schematic illustration of an exemplary website directory **300** of the present invention where the sites **304** of a category **310***b* of the website directory are displayed with their rankings according to number of users who have the site bookmarked **314**, frequency that the site is visited by users **316** and popularity determined by user voting **318**. A benefit of using bookmarked sites as a basis or domain for a web directory is that it creates two natural ranking metrics. As bookmarks are displayed in a category or as the result of a keyword search, they may be prioritized or ranked according the following metrics:

1. How often does a bookmark appear in online bookmark accounts **314** (i.e., how many users in the server side bookmarks community have bookmarked this site); and
2. How often do people who have bookmarked this site access the site from their account **316**.

The more the bookmarks accounts in which a particular site appears, the higher it may be ranked in its interest category. Likewise if the traffic to one bookmarked site is much higher than others that belong in the same interest category, the high traffic site may be ranked above (and possibly placed above in a search result or category listing page) the other sites. This may greatly increases the utility of the web directory. It may also be an important way to exploit the knowledge that is locked up in user bookmarks. Not only are the sites that are interesting enough to have been bookmarked by users simply displayed, but the sites are displayed in a manner for users of the site directory to differentiate which may be more relevant and content/information rich from among a pool of sites displayed in a particular category.

As an option, an additional ranking mechanism may also be built into the site directory by allowing users to vote on the usefulness of any site **318**. In such an embodiment, all three ranks may be displayed alongside the particular link to allow users to have the option to prioritize their selection of a link on the search page by: (a) number of people who have it bookmarked, (b) traffic frequency or (c) voting results.

Category Guides and Owners

When a user adds a site **304** or creates a new subcategory **312***a*, **312***b*, they may be given the option to assign their identity (i.e., their username to their online bookmarks account) to the added category or site. As a further option, the user may also be granted additional privileges as creators of a new category, such as the right to recommend to accept or reject new sites/subcategories under the new category (with or without a further safeguard option of leaving the final determination with the directory editors). This option adds a dimension of interactivity and expertise to the web directory. With such an option, users of the site direction are able to find not only relevant websites but also users with similar or identical interests.

The site directory's users may also be allowed to send information transmittals such as an instant message or e-mail to these "experts" or guides whose username is associated with the particular category or link they entered into the directory. With such a feature, the online bookmarks accounts of these guides may also include features that give them the capacity to receive these communiques and transmit replies back to sender. As a further option, associated with each category may be a forum or chat room where users with like interests are allowed to communicate with each other.

Online Bookmarks Managing System

The following portion of the present specification is included to provide further clarification to various aspects and portions of the present invention through discussion of exemplary embodiments of the present invention. In particular, the following portion of the present specification includes further information regarding the user and maintenance an online bookmarks managing system and user online bookmark accounts of the system.

In an embodiment of the present invention, as soon as a user signs up, the user may be set up with a personal, password-protected, web-based online bookmark account.

Every time the user accesses the Internet, wherever the user is, the user is able to sign in and see the user's complete bookmarks selection. No matter what browser, no matter which operating system, the user's favorite links are there via the user's online bookmark account for the user to use.

FIG. **6** illustrates an exemplary display of a online bookmark account page **600** of a user. This exemplary page **600** has a central area **602**, a left menu bar **604** and a top menu bar **606**. Also displayed may be a bookmark adding area **608**.

With continuing reference to FIG. **6**, in this exemplary embodiment of the present invention, the icon **610** with the circle in the middle located in the central area **602** is used to represent a bookmark (also known as a favorite, a link, or a shortcut) of the user. A bookmark is a saved link to a web site that, when selected, accesses the linked website. Next to this icon **610** may be a text **612** providing further indication of the site to which the particular bookmark provides a link to.

In this exemplary embodiment, the icon **614** similar to a folder is the icon for a folder in which a user may organize their bookmarks. A folder's usage is similar to the use of directories in a computer's desktop: namely, to allow a user to group similar items together. These icons are similar to a closed folder when the contents of the folder are not being displayed. A user may view the contents of the folder by clicking on the "+" sign **616** to the left of the closed folder icon. This changes the icon to an "open folder" icon, the "+" sign to "−" sign **618**, and displays the contents of the folder. A user may then close the folder by clicking on the "−" sign to the left of the open folder. This will close the folder once again.

When folder icons **614** are present, bookmark icons **610** may appear under the folder in which it is stored. Note that the display uses various levels of indentation and connecting

lines **620** to indicate the specific folder under which the bookmark is filed.

Accessing Links/Bookmarks

How to Use/access Bookmarks

To visit the bookmarked site, a user clicks on a bookmark icon **610**. Clicking on the bookmark icon will open up a new window and take the user to the bookmarked site. To return to the bookmark list, a user may either close the new window that had opened up or the user may switch back to the browser window with the a session of the present invention active.

Displaying Bookmarks

To allow users unlimited bookmarks and to present them more efficiently, bookmarks may be broken up and displayed in separate pages. In an illustrative embodiment, a default of approximately 250 bookmarks may be displayed on each page. A user may change the number of bookmarks they want displayed on each page. To do so, the user clicks on the User Options button **622** displayed on the online bookmark account page **600** (see FIG. **6**) and make changes in "View Size" form that is subsequently displayed.

Accessing Bookmarks of a User Account from Another Computer

As a web-based bookmarks service, the present invention may available from any computer connected to the Internet. This enables a user to access, and edit their bookmarks from anywhere in the world. A user does not need to login from the same computer every time the user wishes to use their bookmarks to browse the Internet. Nor does a user need to sign up again or transfer any files when they switch computers.

Managing Links

FIG. **7** illustrates tools displayed on a user's bookmark page **600** of the present invention that are included to help a user manage their bookmarks. Some examples include:

- add, delete, or rename functions **702**, **704**, **706**;
- a move function **708** for organizing a user's links;
- duplicate or stale (i.e. broken or inactive) bookmark detectors;
- search and sorting functions **710**, **712** to help a user find bookmarks that the user may be looking for; and
- an e-mailing function **716** for transmitting information utilizing a network.

Drag & Drop Functionality

In embodiments of the present invention with such a this feature, the pains associated with managing information online may be reduced. With reference to FIG. **8**, users may click, drag and drop their bookmarks **610** (and folders **614**) to move them anywhere within their account. One-touch management of links, folders and link properties to make the user's life easier. Select one link **610** or more to display a box **806**, choose the appropriate function **808***a*, **808***b*, **808***c*, **808***d* from the box and the function is then executed.

Remote Addition

With particular reference to FIG. **9**, a user may also add bookmarks to their online bookmark account without even being on the online bookmark provider's webpage by using an "Adding Bookmarks Remotely" feature **902** that may be included on a user's web browser **900**. This feature lets a user add links while surfing on the internet by clicking on the function **902** as shown in FIG. **9**.

Accessing Bookmarks Added through the "Adding Bookmarks Remotely" Feature

All the URLs that users add to their current online bookmark account through the "Adding Bookmarks Remotely" feature may be stored in their online bookmark account and are accessible from any computer on the Internet, just like all their other bookmarks in their online bookmark account. When a user wishes to bookmark a particular page using this function, the user first accesses the particular page through their browser. Once the user is thereat the particular page, the user may add a bookmark remotely by clicking on, for example, the ADD2My_Stuff favorite/bookmark in their current browser. The URL of the particular page is then stored in their My_Stuff folder.

Import/Export Bookmarks

A user may import their current Netscape "Bookmarks" or Internet Explorer "Favorites" directly into their online bookmarks account **600**. The user may either add them to the online bookmark provider's default list of bookmarks, or replace the links with the imported links **1000** as shown in FIG. **10**. This way, the user may import from multiple sources, whenever they want, and even however many times they want.

Sharing Bookmarks

A user may also be able to choose to share their bookmarks with friends—or any surfer by:

- e-mailing links to others; and
- setting selected bookmarks as public. As best illustrated in FIG. **11**, this feature lets users publish their own Internet directories at the touch of a button. Users may choose the links they wish to set as public from their bookmarks **600** and publish them on the Internet 1100.

Add Links/Folders

A user may add links to their account in three ways:

- adding directly (from the account page);
- adding links remotely; and
- adding links through a pop-up window.

Adding Directly

With reference to FIG. **12**, a user may add bookmarks by typing the URL (web site address) into the box **1200** next to "New Link" and then clicking on "Add" **702**. A user may add folders in the same way, by typing the new folder's name into the box **1204** next to "New Folder" and then clicking on "Add" **702**. Both new bookmarks and new folders may be placed inside other folders. A user may do this by clicking on the down arrow **1206** on the "choose location of new url/folder" box **1208** and selecting the folder **1210** users want to move the new item into.

Adding Links Remotely

A user does not have to be in their account to add bookmarks. Users may actually add them while they surf the Internet. First, the user needs to set up the Adding Links Remotely function. With reference to FIG. **13**, once the Adding Bookmarks Remotely function is set up, the user may see a new bookmark called "Add2Clickmarks" **1300** on their browser **1302**. This means that the Netscape Bookmarks list or their Internet Explorer Favorites list will have this new "Add2Clickmarks" bookmark. While a user surfs the Internet, if the user finds a web site he or she wants to add to their account, the user just clicks on the browser bookmark called "Add2Clickmarks" and the site will be automatically added to their online bookmark account.

Adding Links through a Pop-Up Window

To add links to a user account without coming back to the user account page, a user may use the Floating Link Adder pop-up window **1400** which is illustrated in FIG. **14**. This feature is useful when using the present invention from a computer that is not the user's regular workstation.

With reference to FIG. **7**, a Floating Link Adder button **722** may be clicked on from a user account page for displaying of the Floating Link Adder pop-up window **1400** illustrated in FIG. **14**. In the pop-up window **1400**, the user may then input in box **1402** the URL that they want to add. By default, the new link will be added to the top level folder in the user's account. The user may also choose the specific folder that users want the new link to be added to by selection of a folder displayed in box **1404**. Clicking on the Add URL button **1406** adds the link to the user's account.

Add & Manage Folders

Creating a Folder

With reference to FIG. **15**, to create a folder, a user may first type the name of the folder the user wants to be created in "New Folder" space **1204** in the bookmark adding area **608**. The user may then click on the "Add" **702** to created the new folder. When their folder is created, the new folder is displayed with the other folders of the user in the central area **602**.

Creating Folders within Folders

Users may nest folders within folders if so required. To create a new folder within an existing folder, a user may first choose the destination folder from the drop-down menu labeled "File Under" located above their displayed bookmarks of the page. This will ensure that the new folder the user creates will be placed in the folder that the user has chosen. The user then types the name of the folder the user wants to be created in the space to the right of the button titled "New Folder" and then clicks on the "New Folder" link in the top navigation bar. When their folder is created, the user should see that it has been added to their list of current folders.

Undeleting Bookmarks/folders

A user may undo the effects of the last editing step that the user took off their page. To do so, the user clicks on the "undo" button **724** in the left menu bar **604** (see FIG. **7**). This will undo the effect of the last step that the user had executed. Note that undo feature may be used only for the last edit step that the user took. Clicking on undo the second time may redo the step that users had undone.

Viewing the Contents of a Folder

If the contents of their folders are not already visible, click on the "+" sign **616** next to the left of the icon and name of the folder (see FIG. **6**). Note that the icon should represent a closed folder, and the sign next to it should be a "−" sign **618** when the list of bookmarks and folders within this folder is not being displayed. Clicking on the "+" to the left of the closed folder icon should change that icon to an open folder icon, a "+" sign to a "−" sign , and should display the contents of that particular folder including all the bookmarks and folders. To view the contents of any one of the folders within the current folder, click on the "+" sign to the left of the folder icon and the folders contents will be displayed as well.

Hiding Contents of a Folder

If the contents of their folders are being shown, click on the "−" sign **618** next to the left of the icon and name of the folder. Note that the icon should represent an open folder, and the sign next to it should be a "+" sign when the list of bookmarks and folders within this folder is being displayed. Clicking on the − to the left of the open folder icon should change that icon to a closed folder icon, a "−" sign to a "+" sign, and should hide the contents of that particular folder. To hide the contents of any folder within an open folder, just click on the "−" sign to the left of the folder icon. Doing so will hide the contents of this folder from the current display.

Editing Links/Folders

Users may edit their bookmarks with a single click in their user accounts. This may be accomplished by choosing the links that the user wants to edit and then pressing the button corresponding to the desired function. In an embodiment of the present invention, the user may choose to:

delete links and folders;

move links and folders; and

rename links and folders.

Deleting Links/Folders

With reference to FIG. **16**, there may be two ways to delete links or folders in the drag and drop embodiment of the present invention:

- Selection of the link(s)/folder(s) by highlighting them **1600** and then using the "delete" button **704** on the left menu bar. The chosen bookmarks are then removed immediately; and/or
- Clicking on the link/folder so that it is highlighted and then right-clicking a mouse-type input device. From the drop-down menu that appears upon the right-click "delete" is then chosen. The links/folders are then removed from the account immediately.

Moving Links/Folders

With reference to FIG. **17**, to move links/folders within an account, a user first selects the link(s)/folder(s) by highlighting them **1700** with their mouse-type input device. As an option, the user may also use the Ctrl and Shift keys to make multiple selections as in the windows desktop environment. The selections may then be moved **1702** by holding down the left-click button on the mouse which may then be released wherever the user wishes the links to be placed. As an option, to move within a folder, release of the left-click button may be done when the destination folder is highlighted.

Renaming Links/Folders

There may be two ways a user may rename links or folders in a drag and drop embodiment of the present invention. To rename links/folders within a user account, the individual link/folder is selected by highlighting it with an input device such as a mouse-type input device. As an option, a user may not be able to rename multiple selections in one operation.

In one embodiment, upon right-clicking on the link with the user's mouse displays a drop down menu with a rename selection. The choosing of the rename selection from the drop down menu. The title will be replaced by a rename box into which a new title for the link may be entered. With reference FIG. **18**, as another option, once the link/folder is highlighted, clicking on rename selection **706** from the left hand menu bar displays a drop down menu with a rename selection which, upon selection, replaces the title box with a rename box into which a new title for the link may be entered.

Importing Bookmarks

A user may import Netscape "Bookmarks" or Internet Explorer "Favorites" directly into their user account. A user may either add them ("append" them) to the user's current list of bookmarks, or the user may "overwrite" the user's

current list with the ones that the user imports. In an exemplarily embodiment of the present invention importation may be accomplished with the following steps: (1) Go to the "Import/Export" box **714** on the top panel (see FIG. **7**); and then (2) Select either "automatic" or "manual" to indicate how to import the bookmarks.

Automatic Importing Bookmarks

Automatic Import allows a user to import bookmarks automatically from their desktop browser. Once automatic import is selected, a Java Applet will load. Note that it may take a little time to do that. Once the applet is loaded, the user may be asked via a dialog box **1900** to select the browser as illustrated in FIG. **19**. The user then may choose whether they want to overwrite or append to the existing bookmarks with the selection **1902**. The bookmarks may then be imported immediately.

Manually Importing Bookmarks

In an exemplary embodiment of the present invention, to manually import bookmarks, a user first selects the Import/Export button **714** displayed on the top control menu bar on the user account page. The user then follows the following instructions corresponding to the particular browser the user is using:

Importing from the Netscape Browser

In the Netscape browser, select Bookmarks from the top menu.

Click on Edit Bookmarks.

A new window will open up with all of the user's bookmarks visible therein.

From the bookmarks editing window select Save As from the File menu.

This will save the user's bookmarks file in the directory users specify.

Enter the desired file name.

Note the path to the file by clicking on the select arrow next to the Save in: field.

Also note the bookmark file name.

Now return to the Bookmarks Import page in their online bookmark account.

Use the Browse button given on the page to locate the bookmarks file that the user created and saved in the previous steps, outlined above.

Select the bookmarks file.

Press Submit.

The bookmark file will be imported into their online bookmark account.

Importing from the Internet Explorer IE.5

A user first converts their Microsoft favorites to an HTML file.

On the user's browser, go to the File menu and select Import and Export.

Choose Export Favorites when it gives the Import/Export Selection window.

Click Next until users get to the Export Favorites Destination.

Select Export to a File or Address and enter:
C:\My Documents\clickmarks.html

Click Next and then click on Finish.

In the text field of the Browse button on the Import page, type C:\My Documents\clickmarks.html

If the user has saved it on some other place and named it something else, then type that in.

Click on Submit Options.

Return to the Bookmarks Import page in their online bookmark account.

Use the Browse button given on the page to locate the bookmarks file that users created and saved in the previous steps, outlined above.

Select the bookmarks file.

Press Submit.

The user's bookmark file is then be imported into their online bookmark account.

Exporting Bookmarks/Favorites

The present invention also enables users to export their bookmarks/favorites back to the desktop browser. A method that a user may use to export the bookmarks from their user account back to their Netscape or Internet Explorer browser is described as follows: (1) Choose "Import/Export" **714** from the top menu bar (see FIG. **7**) to display a page with a "Export Your Bookmark" selection. Upon selection of this selection, a set of instructions **2000** are displayed as illustrated in FIG. **20** which a user may then follow to export their bookmarks.

Export Bookmarks into to Netscape

To export to Netscape, click on the Import image. From the import page click on the "export their bookmarks" link. Follow the Exporting To Netscape Bookmarks steps. In the two step process users first view the Netscape style bookmarks as an HTML file, then save the file on their local drive.

Export Bookmarks to Internet Explorer

To export to Internet Explorer, click on the Import image. From the import page click on the "export their bookmarks" link. Follow the Exporting To IE Favorites steps. In the three step process users first view and save their online bookmark account as Netscape style bookmarks. The final step requires users to convert the saved Netscape bookmarks file to Internet Explorer favorites using a freely downloadable Microsoft utility.

Managing Bookmarks

The present invention may also provide a user with functions to help the user manage their account. A user may "Sort" their links, "Search" their bookmarks for keywords, and/or "Clean Up" their user account by removing stale and duplicate links.

Search

A user may search through their bookmarks for keywords. In an embodiment of the present invention, this may be accomplished by first clicking on the "Search" button **710** on the left menu bar (see FIG. **7**) so that a search dialog box **2100** is displayed as depicted in FIG. **21**. A keyword(s) may then be entered in the keyword box **2102** and then search area may be chosen for those words by clicking on the down arrow **2104** next to "Search the" **2106** and selecting either Site Title **2108**, Site Summary **2110**, Site URL **2112**, or All Three **2114**. A user may also select whether they want to search for links that contain ALL of the keywords or for links that contain ANY of the keywords. To execute the search, the Search Bookmarks button **2116** is then selected.

In an embodiment of the present invention, the search process may display all of the bookmarks in their current bookmark files corresponding to the search keywords that users have entered. In such an embodiment, there may be no limit to the number of bookmarks that will be displayed as a result of their search.

Sorting

A user may sort their bookmarks in several orders. In an embodiment of the present invention, this may be accom-

plished by first clicking on the Sort button **712** on the left menu bar **604** (see FIG. **7**) to display a Sort screen **2200** as illustrated in FIG. **22**. The Sort screen **2200** may display a plurality of sort order choices **2202**, **2204**, **2206** that a user may select to choose the sort order they users want. Once a sort order is select, the user may then click on Sort button **2208** to execute the sort function.

In one embodiment, when the alphabetical sort is selected, the bookmarks may be sorted by the first word in the description that appears to the right of the icon for the bookmark. When a sorting by date of creation (newest to oldest) is selected, the bookmarks may be sorted such that the bookmarks most recently created appear first. When a sorting by date of creation (oldest to newest) is selected, the user's bookmarks may be sorted so that the bookmarks most recently created appear last.

Checking for Duplicates or Stale Links

In one embodiment of the present invention, a cleanup feature **2300** may be included in the left menu bar of the user's online bookmark account **600** to check for duplicate or stale links. Upon selection of the cleanup feature, a cleanup bookmarks screen **2302** may be displayed as illustrated in FIG. **23**. This screen **2302**, may display two buttons: a "Check Duplicates" button **2304** and "Check Stale" button **2306**.

Selection of the "Check Duplicates" button **2304** executes the duplicate bookmark checking function which checks the user's bookmark collection for duplicate bookmarks and then displays a list of any duplicated bookmarks. The user may then be given an option to delete the duplicate bookmarks from their bookmark collection. The duplicate bookmark checking function helps users remove duplicate links from their accounts. Organizing bookmarks into different folders and sub-folders increases the difficulty of keeping track of duplicate bookmarks within their bookmark files. By comparing all the bookmarks and their titles/summaries stored, the bookmark management system identifies duplicate bookmarks stored in an user's online bookmark account, regardless of the folders that they may be stored in and the different titles that they may exist with. A user may therefore remove all the duplicate links that might lead to the same URL. This may be also useful in removing bookmarks that point to old locations of sites, although users may already have the correct updated URL in their files.

Selection of the "Check Stale" button **2306** executes the stale bookmark checking function which checks the user's bookmark collection for old or stale bookmarks (i.e., bookmarks that are broken or have moved) and then displays a list of any stale bookmarks in the user's bookmark collection. The user may then be provided the options of Renaming, Deleting, or Doing Nothing with the listed stale bookmarks. The stale bookmark checking function helps a user remove bookmarks that have expired since the user last used them.

E-mailing Bookmarks

This feature provides a handy way for a user to e-mail a their bookmarks to friends without having to cut and paste the URLs into e-mail messages. As best illustrated in FIG. **24**, this function may be accomplished by first selecting all the bookmarks and folders **2400** to be e-mailed (multiple selections may be made using the Ctrl and Shift keys as in a windows desktop environment) and then selecting the mail button **716** displayed on the user's bookmark account page (see FIG. **7**). Upon selection of the mail button **716**, an e-mail screen **2402** may then be displayed into which a sender's and receiver's e-mail addresses may be entered in the appropriate boxes **2404**, **2406**. As an option, a message box **2408** may also be included for permitting the adding of a note to accompany the links. A "send" button may also be included for executing the transmission of the e-mail.

Making Bookmarks Public

In one embodiment of the present invention a user's account and all the bookmarks in it may be private by default. However, if a user wants to share certain bookmarks or folders with other users, the user may opt to make their bookmarks public. Also, if the user has already made certain links public, the user may also use this function to make their public bookmarks private again. In one such embodiment of the present invention, this feature may be carried out by first selecting a "Setup Public" button **718** on the left menu bar (see FIG. **7**) to display a list **2500** of the user's bookmarks and folders **2502** as illustrated in FIG. **25**. Also displayed with the list adjacent each bookmark and folder is a checkmark box **2504**. To select which bookmarks/folders are to be made public, the user clicks on the checkmark boxes next to the bookmarks or folders the user wants to make public so that a checkmark **2506** appears in the selected checkmark box. The user then clicks on a "Submit" button **2508** also displayed with the list to execute the public function which then displays the selected bookmarks is a public bookmark screen/page.

To make a public link private again, a user may click on the checkmark box next to the particular link and then select a box **2510** above the "Submit" button and then click on "Submit" to execute the public function to remove from display the selected bookmark(s) from the public bookmark screen/page.

Floating Windows

The "Float Window" button **720** on the left menu bar (see FIG. **7**) displays up a miniature version (i.e., "floating window") **2600** of the user's online bookmark account page as illustrated in FIG. **26**. This floating window **2600** gives the user a view of the user's account while surfing on the Internet and permits the user to add new bookmarks to their account. This window displays a user's links without most of the other controls found on their full size account page Having a smaller window open frees up monitor space and may be optimal for a user if the user is not actively managing their bookmarks. A user may return to their main user page by clicking on the "Go To Home & Close" link **2602**. Two other controls may also be included to allow a user to refresh the page ("Reload" **2604**), and to simply close the window "Close" **2606**).

Floating Link Adder

The "Floating Link Adder" button **722** on the left menu bar (see FIG. **7**) pops up a window **2700** as illustrated in FIG. **27** that lets a user add and file bookmarks to their user account while they are surfing the Internet without having to return to their online bookmarks account page. To add a bookmark with this window, a user simply types the web site address in box **2702** and clicks on "Add URL" **2704** to execute this function and add a bookmark for this site to the user's account. A user may also choose which folder the user wants the bookmark to go into by using the "File Under" pull-down menu **2706**.

Recommended Links

As illustrated in FIG. **28**, an embodiment of the present invention may include a "Recommended Links" feature

2800 in the left menu bar 604 of a user's online bookmark account page 600. Upon selection of the Recommended Links feature, a page may be displayed as illustrated in FIG. 29 that displays a list of popular sites 2900 which other users may have found useful. In such an embodiment, the bookmark management system may track popular links in many interest categories. These recommended links may be organized by various categories. A user may select any of these links to add to their account. A user may also choose which folder in their account page into which the recommended links are stored. As a further option, users may also be able choose to inform the bookmark management system that they do not wish to receive any future recommendations for a given interest category. In

Public Bookmarks Feature

The present invention may also include a public bookmarks feature which lets users publish their own Internet Directories for the whole world to browse. As illustrated in FIG. 30, accessing this feature displays a list of users with public bookmarks 3000 that comprises, for example, a list of user name links 3002 in alphabetical order. Upon selection of one of the user name links, a welcome page 3100 for that particular user's public bookmarks may then be displayed as illustrated in FIG. 31. This welcome page may display all of the bookmarks 3102 and folders 3104 that have been made public by that particular user and which are therefore accessible to any user upon selection.

Security

In an embodiment of the present invention, every online bookmark account may be password protected. This means that users must begin by logging into their account, unless the users have opted for an auto-login feature. Logging into a user account in such an embodiment is possible only by users correctly entering an associated Login ID and password. In one such embodiment, a user may use between 3 to 20 characters for their login ID while there may be no restriction on the length of the user's password length. Cookies may also be used to identify users.

Although only a few embodiments of the present invention have been described in detail herein, it should be understood that the present invention may be embodied in many other specific forms without departing from the spirit or scope of the invention. Therefore, the present examples and embodiments are to be considered as illustrative and not restrictive, and the invention is not to be limited to the details given herein, but may be modified within the scope of the appended claims.

What is claimed is:

1. A method for generating a prioritized network site directory, comprising the steps of:

(a) generating at least one link to a site on a network;

(b) adding the site to a site directory having a set of categories comprising at least one category, each category including a plurality of links;

(c) categorizing the site into one of the categories of the site directory;

(d) ranking the categorized site in the category;

(e) displaying the links in the category according to rank, the links including the at least one generated link;

(e) displaying an identity of the creator of the at least one generated link to a second user upon display of the links to the second user; and

(g) allowing the second user to send an information transmittal to the creator of the at least one link.

2. A method as recited in claim 1, wherein the step of adding the site to the site directory further comprises the steps of: comparing the site to pre-existing sites in the site directory; and generating a notification if the site matches one of the pre-existing sites of the site directory.

3. A method as recited in claim 1, wherein the step of categorizing the site into one of the categories of the site directory further comprises the steps of:

generating a table of sites, wherein the table of sites comprises at least one pre-existing site ranked in the set of categories of the set directory;

determining whether the site exists in the table of sites; and mapping the site to one of the categories of the set of categories if the site exists in the table of sites.

4. A method as recited in claim 3, wherein the step of categorizing the site into one of the categories of the site directory further comprises the step of

searching the site for keywords relating to the categories of the set of categories if the site does not exist in the table of sites.

5. A method as recited in claim 3, wherein the step of categorizing the site into one of the categories of the site directory further comprises the steps of:

selecting one of the categories into which the site is to be categorized;

comparing the selected category to the category to which the site is mapped;

and generating a notification if the selected category does not match the category to which the site is mapped.

6. A method as recited in claim 1, wherein the site is ranked in the category according to a type of ranking based on at least one of: the number of generated links to the site, the frequency that the site is accessed by selection of the links, and polling.

7. A method as recited in claim 6, further comprising the step of allowing a user to specify the type of ranking applied to the category, wherein the sites in the category are displayed according to the user-selected type of ranking.

8. A method as recited in claim 1, further comprising the steps of creating a sub-category into which the site is categorized; assigning a creator identity to the sub-category that includes information about a creator of the sub-category; granting the creator of the sub-category at least one privilege selected from a group consisting of: recommending to accept or reject additional sites into and additional sub-categories under the sub-category, receiving information transmittals from users of the site in the sub-category, and transmitting information to users of sites in the sub-category.

9. A method as recited in claim 1, wherein the information transmittal is selected from a group consisting of: an electronic mail message and an instant message.

10. A method as recited in claim 8, wherein the step of adding the site directory further comprises: comparing the site to pre-existing site directory; and generating a notification if the sites matches one of the pre-existing sites of the site directory.

11. A method as recited in claim 8, wherein categorizing the site into one of the categories of the site directory further comprises: generating a table of sites, wherein the table of sites comprises at least one pre-existing site ranked in the set of categories of the set directory; determining whether the site exists in the table of sites; and mapping the site to one of the categories of the set of categories if the site exists in the table of sites.

12. A method as recited in claim 11, wherein categorizing the site into one of the categories of the site directory further

comprises: selecting one of the categories into which the site is to be categorized; comparing the selected category to the category to which the site is mapped; and generating a notification if the selected category does not match the category to which the site is mapped.

13. A method as recited in claim **11**, wherein categorizing the site into one of the categories of the site directory further comprises searching the site for keywords relating to the categories of the set of categories if the site does not exist in the table of sites.

14. A method as recited in claim **8**, wherein the site is ranked in the category according to a type of ranking based on at least one of: the number of generated links to the site, the frequency that the site is accessed by selection of the links, and polling.

15. A method as recited in claim **14**, further comprising allowing a user to specify the type of ranking applied to the category, wherein the sites in the category are displayed according to the user-selected type of ranking.

16. A method for generating a prioritized network site directory, comprising the steps of:

(a) generating at least one link to a site on a network;

(b) adding the site to a site directory having a set of categories comprising at least one category, each category including a plurality of links;

(c) comparing the site to pre-existing sites in the site directory;

(d) generating a notification if the site matches one of the pre-existing sites of the site directory;

(e) categorizing the site into one of the categories of the site directory, wherein the step of categorizing the site into one of the categories of the site directory further comprises the step of:

i. generating a table of sites, whether the table of sites comprises at least one pre-existing site ranked in the set of categories of the set directory;

ii. determining whether the site exists in the table of sites;

iii. mapping the site to one of the categories of the set of categories if the site exists in the table of sites;

iv. searching the site for keywords relating to the categories of the set of categories if the site does not exist in the table of sites;

v. selecting one of the categories into which the site is to be categorized;

vi. comparing the selected category to the category to which the site is mapped;

vii. generating a notification if the selected category does not match the category to which the site is mapped;

(f) ranking the categorized site in the category, wherein the site is ranked in the category according to a type of ranking based on at least one of: the number of generated links to the site stored in online bookmark accounts, the frequency that the site is accessed by selection of the links, and polling;

(g) allowing a user to specify the type of ranking applied to the category, wherein sites in the category are displayed according to the user-selected type of ranking;

(h) displaying the links in the category according to rank, the links including the at least one generated link;

(i) associating an identity of a creator of the at least one link with the at least one generated link;

(j) displaying the identity of the creator to a second user upon display of the links to the second user;

(k) allowing the second user to send an information transmittal to the creator of the at least one link, wherein the information transmittal is selected from a group consisting of: an electronic mail message and an instant message;

(l) creating a sub-category into which the site is categorized;

(m) assigning a creator identity to the sub-category that includes information about a creator of the sub-category;

(n) granting the creator of the sub-category at least one privilege selected from a group consisting of: recommending to accept or reject additional sites into and additional sub-categories under the sub-category, receiving information transmittals from users of site in the sub-category, and transmitting information to users of sites in the sub-category; and

(o) associating a mode of communication with the category, the mode of communication being selected from a group consisting of: a forum and a chat room.

17. A computer program embodied on a computer readable medium for generating a prioritized network site directory, comprising:

(a) a code segment that generates at least one link to a site on a network;

(b) a code segment that adds the site to a site directory having a set of categories comprising at least one category, each category including a plurality of links;

(c) a code segment that categorizes the site into one of the categories of the site directory;

(d) a code segment that ranks the categorized site in the category;

(e) a code segment that displays the links in the category according to rank, the links including the at least one generated link;

(f) a code segment that displays an identity of the creator of the at least one generated link to a second user upon display of the links to the second user;

(g) a code segment that allows the second user to send an information transmittal to the creator of the at least one link.

(h) a code segment that creates a sub-category into which the site is categorized;

(i) a code segment that assigns a creator identity to the sub-category that includes information about a creator of the sub-category; and

(j) a code segment that grants the creator of the sub-category at least one privilege selected from a group consisting of: recommending to accept or reject additional sites into and additional sub-categories under the sub-category, receiving information transmittals from users of the site in the sub-category, and transmitting information to users of sites in the sub-category.

18. A computer program as recited in claim **17**, further comprising a code segment that grants the creator of the sub-category at least one of the privileges consisting of: recommending to accept or reject additional sites into and additional sub-categories under the sub-category, receiving information transmittals from users of site in the sub-category, and transmitting information to users of sites in the sub-category.

19. A system for generating a prioritized network site directory, comprising:

(a) a logic that generates at least one link to a site on a network;

(b) a logic that adds the site to a site directory having a set of categories comprising at least one category, each category including a plurality of links;

(c) a logic that categorizes the site into one of the categories of the site directory;

(d) a logic that ranks the categorized site in the category;

(e) a logic that displays the links in the category according to rank, the links including the at least one generated link;

(f) a logic that displays an identity of the creator of the at least one generated link to a second user upon display of the links to the second user;

(g) a logic that allows the second user to send an information transmittal to the creator of the at least one link;

(h) a logic that creates a sub-category into which the site is categorized;

(i) a logic that assigns a creator identity to the sub-category that includes information about a creator of the sub-category; and

(j) a logic that grants the creator of the sub-category at least one privilege selected from a group consisting of: recommending to accept or reject additional sites into and additional sub-categories under the sub-category, receiving information transmittals from users of the site in the sub-category, and transmitting information to users of sites in the sub-category.

20. A method as recited in claim **1**, further comprising the step of associating a mode of communication with the category; the mode of communication being selected from a group consisting of: a forum and a chat room.

* * * * *

UNITED STATES PATENT AND TRADEMARK OFFICE

Commissioner for Patents
United States Patent and Trademark Office
P.O. Box 1450
Alexandria, VA 22313-1450
www.uspto.gov

CPA GLOBAL
2318 MILL RD
SUITE 12 FLOOR
ALEXANDRIA VA 22314

MAILED
FEB 21 2012
OFFICE OF PETITIONS

In re Application of :
Fishman, et al. :
Application No. 09/416,081 : ON PETITION
Filed: October 12, 1999 :
Patent No. 7,061,657 :
Issued: June 13, 2006

This is a decision on the fee deficiency submission under 37 CFR 1.28(c), filed January 4, 2012.

The fee deficiency submission under 37 CFR 1.28 of $640 for the 3.5 year maintenance fee is hereby accepted.

$640 has been charged to Deposit Account No. 50-4623, as authorized.

The change of status to large entity has been entered.

Telephone inquiries concerning this matter may be directed to the undersigned at (571) 272-3207.

Cliff Congo
Petitions Attorney
Office of Petitions

UNITED STATES PATENT AND TRADEMARK OFFICE

Commissioner for Patents
United States Patent and Trademark Office
P.O. Box 1450
Alexandria, VA 22313-1450
www.uspto.gov

MICROSOFT CORPORATION
ONE MICROSOFT WAY
REDMOND WA 98052-6399

MAILED
MAR 01 2011
OFFICE OF PETITIONS

In re Patent No. 6,243,094	:	
Issued: June 5, 2001	:	
Application No. 09/416,172	:	ON PETITION
Filed: October 11, 1999	:	
Attorney Docket No. 324379.01	:	

This is a notice regarding your request for acceptance of a fee deficiency submission under 37 CFR 1.28 filed January 24, 2011.

On September 1, 1998, the Court of Appeals for the Federal Circuit held that 37 CFR 1.28(c) is the sole provision governing the time for correction of the erroneous payment of the issue fee as a small entity. **See DH Technology v. Synergystex International, Inc. 154 F.3d 1333, 47 USPQ2d 1865 (Fed. Cir. Sept. 1, 1998).**

The Office no longer investigates or rejects original or reissue applications under 37 CFR 1.56. **1098 Off. Gaz. Pat. Office 502 (January 3, 1989)**. Therefore, nothing in this Notice is intended to imply that an investigation was done.

Your fee deficiency submission under 37 CFR 1.28 is hereby **ACCEPTED**.

This patent is no longer entitled to small entity status. Accordingly, all future fees paid in this patent must be paid at the large entity rate.

Additionally, the Power of Attorney and Change of Correspondence Address submitted with the instant petition is hereby accepted.

Telephone inquires concerning this decision should be directed to the undersigned at (571) 272-7751.

Joan Olszewski
Petitions Examiner
Office of Petitions

PTO/SB/66 (03-09)
Approved for use through 03/31/2012. OMB 0651-0016
U.S. Patent and Trademark Office: U.S. DEPARTMENT OF COMMERCE
Under the Paperwork Reduction Act of 1995, no persons are required to respond to a collection of information unless it displays valid OMB control number.

PETITION TO ACCEPT UNINTENTIONALLY DELAYED PAYMENT OF MAINTENANCE FEE IN AN EXPIRED PATENT (37 CFR 1.378(c))

Patent Number	Issue Date (YYYY-MM-DD)	Application Number	Filing Date (YYYY-MM-DD)	Docket Number (if applicable)
6,292,724	2001-09-18	09/416,604	1999-10-12	83715

CAUTION: Maintenance fee (and surcharge, if any) payment must correctly identify: (1) the patent number and (2) the application number of the actual U.S. application leading to issuance of that patent to ensure the fee(s) is/are associated with the correct patent. 37 CFR 1.366(c) and (d).

SMALL ENTITY

☒ Patentee claims, or has previously claimed, small entity status. See 37 CFR 1.27.

LOSS OF ENTITLEMENT TO SMALL ENTITY STATUS

☐ Patentee is no longer entitled to small entity status. See 37 CFR 1.27(g)

NOT Small Entity	Fee	Code	Small Entity	Fee	Code
○	3 ½ year	(1551)	○	3 ½ year	(2551)
○	7 ½ year	(1552)	◉	7 ½ year	(2552)
○	11 ½ year	(1553)	○	11 ½ year	(2553)

SURCHARGE

The surcharge required by 37 CFR 1.20(i)(2) (Fee Code 1558) must be paid as a condition of accepting unintentionally delayed payment of the maintenance fee.

MAINTENANCE FEE (37 CFR 1.20(e)-(g))

The appropriate maintenance fee must be submitted with this petition.

STATEMENT

THE UNDERSIGNED CERTIFIES THAT THE DELAY IN PAYMENT OF THE MAINTENANCE FEE TO THIS PATENT WAS UNINTENTIONAL

PETITIONER(S) REQUEST THAT THE DELAYED PAYMENT OF THE MAINTENANCE FEE BE ACCEPTED AND THE PATENT REINSTATED

THIS PORTION MUST BE COMPLETED BY THE SIGNATORY OR SIGNATORIES

37 CFR 1.378(d) states: "Any petition under this section must be signed by an attorney or agent registered to practice before the Patent and Trademark Office, or by the patentee, the assignee, or other party in interest."

I certify, in accordance with 37 CFR 1.4(d)(4) that I am

○ An attorney or agent registered to practice before the Patent and Trademark Office

○ A sole patentee

○ A joint patentee; I certify that I am authorized to sign this submission on behalf of all the other patentees.

○ A joint patentee; all of whom are signing this e-petition

◉ The assignee of record of the entire interest

PTO/SB/66 (03-09)
Approved for use through 03/31/2012. OMB 0651-0016
U.S. Patent and Trademark Office: U.S. DEPARTMENT OF COMMERCE
Under the Paperwork Reduction Act of 1995, no persons are required to respond to a collection of information unless it displays valid OMB control number.

The Assignee of record of the entire interest			
Under 37 CFR 3.71 an assignee becomes of record by filing a statement in compliance with 37 CFR 3.73(b). Signature requirements are set forth in 37 CFR 1.4(d), and the undersigned certifies that he / she is empowered to act on behalf of the assignee of the entire interest			
Signature	/Timothy P. Slifkin/	Date (YYYY-MM-DD)	2011-03-03
Name	Timothy P. Slifkin		
Enter Reel and Frame Number		Remove	
Reel Number	023084	Frame Number	0050
Click ADD for additional Reel Number and Frame Number		Add	

This collection of information is required by 37 CFR 1.378(c). The information is required to obtain or retain a benefit by the public which is to file (and by the USPTO to process) an application. Confidentiality is governed by 35 U.S.C. 122 and 37 CFR 1.11 and 1.14. This collection is estimated to take 1 hour to complete, including gathering, preparing, and submitting the completed application form to the USPTO. Time will vary depending upon the individual case. Any comments on the amount of time you require to complete this form and/ or suggestions for reducing this burden, should be sent to the Chief Information Officer, U.S. Patent and Trademark Office, U.S. Department of Commerce, P.O. Box 1450, Alexandria, VA 22313-1450. DO NOT SEND FEES OR COMPLETED FORMS TO THIS ADDRESS. **This form can only be used when in conjunction with EFS-Web. If this form is mailed to the USPTO, it may cause delays in reinstating the patent.**

Privacy Act Statement

The Privacy Act of 1974 (P.L. 93-579) requires that you be given certain information in connection with your submission of the attached form related to a patent application or patent. Accordingly, pursuant to the requirements of the Act, please be advised that: (1) the general authority for the collection of this information is 35 U.S.C. 2(b)(2); (2) furnishing of the information solicited is voluntary; and (3) the principal purpose for which the information is used by the U.S. Patent and Trademark Office is to process and/or examine your submission related to a patent application or patent. If you do not furnish the requested information, the U.S. Patent and Trademark Office may not be able to process and/or examine your submission, which may result in termination of proceedings or abandonment of the application or expiration of the patent.

The information provided by you in this form will be subject to the following routine uses:

1. The information on this form will be treated confidentially to the extent allowed under the Freedom of Information Act (5 U.S.C. 552) and the Privacy Act (5 U.S.C. 552a). Records from this system of records may be disclosed to the Department of Justice to determine whether the Freedom of Information Act requires disclosure of these records.

2. A record from this system of records may be disclosed, as a routine use, in the course of presenting evidence to a court, magistrate, or administrative tribunal, including disclosures to opposing counsel in the course of settlement negotiations.

3. A record in this system of records may be disclosed, as a routine use, to a Member of Congress submitting a request involving an individual, to whom the record pertains, when the individual has requested assistance from the Member with respect to the subject matter of the record.

4. A record in this system of records may be disclosed, as a routine use, to a contractor of the Agency having need for the information in order to perform a contract. Recipients of information shall be required to comply with the requirements of the Privacy Act of 1974, as amended, pursuant to 5 U.S.C. 552a(m).

5. A record related to an International Application filed under the Patent Cooperation Treaty in this system of records may be disclosed, as a routine use, to the International Bureau of the World Intellectual Property Organization, pursuant to the Patent Cooperation Treaty.

6. A record in this system of records may be disclosed, as a routine use, to another federal agency for purposes of National Security review (35 U.S.C. 181) and for review pursuant to the Atomic Energy Act (42 U.S.C. 218(c)).

7. A record from this system of records may be disclosed, as a routine use, to the Administrator, General Services, or his/her designee, during an inspection of records conducted by GSA as part of that agency's responsibility to recommend improvements in records management practices and programs, under authority of 44 U.S.C. 2904 and 2906. Such disclosure shall be made in accordance with the GSA regulations governing inspection of records for this purpose, and any other relevant (i.e., GSA or Commerce) directive. Such disclosure shall not be used to make determinations about individuals.

8. A record from this system of records may be disclosed, as a routine use, to the public after either publication of the application pursuant to 35 U.S.C. 122(b) or issuance of a patent pursuant to 35 U.S.C. 151. Further, a record may be disclosed, subject to the limitations of 37 CFR 1.14, as a routine use, to the public if the record was filed in an application which became abandoned or in which the proceedings were terminated and which application is referenced by either a published application, an application open to public inspections or an issued patent.

9. A record from this system of records may be disclosed, as a routine use, to a Federal, State, or local law enforcement agency, if the USPTO becomes aware of a violation or potential violation of law or regulation.

UNITED STATES PATENT AND TRADEMARK OFFICE

Commissioner for Patents
United States Patent and Trademark Office
P.O. Box 1450
Alexandria, VA 22313-1450
www.uspto.gov

In re Patent No. 6292724
Issue Date: September 18,2001
Application No. 09416604
Filed: October 12,1999
Attorney Docket No.

:
:DECISION GRANTING PETITION
:UNDER 37 CFR 1.378(c)
:

This is a decision on the electronic petition, filed March 4,2011 ,under 37 CFR 1.378(c) to accept the unintentionally delayed payment of the 7.5 year maintenance fee for the above-identified patent.

The petition is **GRANTED**.

The maintenance fee is accepted, and the above-identified patent reinstated as of March 4,2011 . This decision also constitutes notice that the fee has been accepted. An electronic copy of the petition and this decision has been created as an entry in the Image File Wrapper. Nevertheless, petitioner should print and retain an independent copy.

Telephone inquiries related to this electronic decision should be directed to the Electronic Business Center at 1-866-217-9197.

UNITED STATES PATENT AND TRADEMARK OFFICE

Commissioner for Patents
United States Patent and Trademark Office
P.O. Box 1450
Alexandria, VA 22313-1450
www.uspto.gov

In re Patent No. 6264905
Issue Date: July 24,2001
Application No. 09416665
Filed: October 12,1999
Attorney Docket No. HF5300

:
:DECISION GRANTING PETITION
:UNDER 37 CFR 1.378(c)
:

This is a decision on the electronic petition, filed July 18,2011 ,under 37 CFR 1.378(c) to accept the unintentionally delayed payment of the 7.5 year maintenance fee for the above-identified patent.

The petition is **GRANTED**.

The maintenance fee is accepted, and the above-identified patent reinstated as of July 18,2011 .
This decision also constitutes notice that the fee has been accepted. An electronic copy of the petition and this decision has been created as an entry in the Image File Wrapper. Nevertheless, petitioner should print and retain an independent copy.

Telephone inquiries related to this electronic decision should be directed to the Electronic Business Center at 1-866-217-9197.

PTO/SB/66 (03-09)
Approved for use through 03/31/2012. OMB 0651-0016
U.S. Patent and Trademark Office: U.S. DEPARTMENT OF COMMERCE
Under the Paperwork Reduction Act of 1995, no persons are required to respond to a collection of information unless it displays valid OMB control number.

PETITION TO ACCEPT UNINTENTIONALLY DELAYED PAYMENT OF MAINTENANCE FEE IN AN EXPIRED PATENT (37 CFR 1.378(c))

Patent Number	Issue Date (YYYY-MM-DD)	Application Number	Filing Date (YYYY-MM-DD)	Docket Number (if applicable)
6264905	2001-07-24	09416665	1999-10-12	

CAUTION: Maintenance fee (and surcharge, if any) payment must correctly identify: (1) the patent number and (2) the application number of the actual U.S. application leading to issuance of that patent to ensure the fee(s) is/are associated with the correct patent. 37 CFR 1.366(c) and (d).

SMALL ENTITY

☒ Patentee claims, or has previously claimed, small entity status. See 37 CFR 1.27.

LOSS OF ENTITLEMENT TO SMALL ENTITY STATUS

☐ Patentee is no longer entitled to small entity status. See 37 CFR 1.27(g)

NOT Small Entity	Fee	Code	Small Entity	Fee	Code
○	3 ½ year	(1551)	○	3 ½ year	(2551)
○	7 ½ year	(1552)	◉	7 ½ year	(2552)
○	11 ½ year	(1553)	○	11 ½ year	(2553)

SURCHARGE

The surcharge required by 37 CFR 1.20(i)(2) (Fee Code 1558) must be paid as a condition of accepting unintentionally delayed payment of the maintenance fee.

MAINTENANCE FEE (37 CFR 1.20(e)-(g))

The appropriate maintenance fee must be submitted with this petition.

STATEMENT

THE UNDERSIGNED CERTIFIES THAT THE DELAY IN PAYMENT OF THE MAINTENANCE FEE TO THIS PATENT WAS UNINTENTIONAL

PETITIONER(S) REQUEST THAT THE DELAYED PAYMENT OF THE MAINTENANCE FEE BE ACCEPTED AND THE PATENT REINSTATED

THIS PORTION MUST BE COMPLETED BY THE SIGNATORY OR SIGNATORIES

37 CFR 1.378(d) states: "Any petition under this section must be signed by an attorney or agent registered to practice before the Patent and Trademark Office, or by the patentee, the assignee, or other party in interest."

I certify, in accordance with 37 CFR 1.4(d)(4) that I am

◉ An attorney or agent registered to practice before the Patent and Trademark Office

○ A sole patentee

○ A joint patentee; I certify that I am authorized to sign this submission on behalf of all the other patentees.

○ A joint patentee; all of whom are signing this e-petition

○ The assignee of record of the entire interest

PTO/SB/66 (03-09)
Approved for use through 03/31/2012. OMB 0651-0016
U.S. Patent and Trademark Office: U.S. DEPARTMENT OF COMMERCE
Under the Paperwork Reduction Act of 1995, no persons are required to respond to a collection of information unless it displays valid OMB control number.

Patent Practitioner			
A signature of the applicant or representative is required in accordance with 37 CFR 1.33 and 10.18. Please see 37 CFR 1.4(d) for the form of the signature			
Signature	/ Howard E. Sandler /	Date (YYYY-MM-DD)	2011-07-18
Name	Howard E. Sandler	Registration Number	25370

This collection of information is required by 37 CFR 1.378(c). The information is required to obtain or retain a benefit by the public which is to file (and by the USPTO to process) an application. Confidentiality is governed by 35 U.S.C. 122 and 37 CFR 1.11 and 1.14. This collection is estimated to take 1 hour to complete, including gathering, preparing, and submitting the completed application form to the USPTO. Time will vary depending upon the individual case. Any comments on the amount of time you require to complete this form and/ or suggestions for reducing this burden, should be sent to the Chief Information Officer, U.S. Patent and Trademark Office, U.S. Department of Commerce, P.O. Box 1450, Alexandria, VA 22313-1450. DO NOT SEND FEES OR COMPLETED FORMS TO THIS ADDRESS. **This form can only be used when in conjunction with EFS-Web. If this form is mailed to the USPTO, it may cause delays in reinstating the patent.**

Privacy Act Statement

The Privacy Act of 1974 (P.L. 93-579) requires that you be given certain information in connection with your submission of the attached form related to a patent application or patent. Accordingly, pursuant to the requirements of the Act, please be advised that: (1) the general authority for the collection of this information is 35 U.S.C. 2(b)(2); (2) furnishing of the information solicited is voluntary; and (3) the principal purpose for which the information is used by the U.S. Patent and Trademark Office is to process and/or examine your submission related to a patent application or patent. If you do not furnish the requested information, the U.S. Patent and Trademark Office may not be able to process and/or examine your submission, which may result in termination of proceedings or abandonment of the application or expiration of the patent.

The information provided by you in this form will be subject to the following routine uses:

1. The information on this form will be treated confidentially to the extent allowed under the Freedom of Information Act (5 U.S.C. 552) and the Privacy Act (5 U.S.C. 552a). Records from this system of records may be disclosed to the Department of Justice to determine whether the Freedom of Information Act requires disclosure of these records.

2. A record from this system of records may be disclosed, as a routine use, in the course of presenting evidence to a court, magistrate, or administrative tribunal, including disclosures to opposing counsel in the course of settlement negotiations.

3. A record in this system of records may be disclosed, as a routine use, to a Member of Congress submitting a request involving an individual, to whom the record pertains, when the individual has requested assistance from the Member with respect to the subject matter of the record.

4. A record in this system of records may be disclosed, as a routine use, to a contractor of the Agency having need for the information in order to perform a contract. Recipients of information shall be required to comply with the requirements of the Privacy Act of 1974, as amended, pursuant to 5 U.S.C. 552a(m).

5. A record related to an International Application filed under the Patent Cooperation Treaty in this system of records may be disclosed, as a routine use, to the International Bureau of the World Intellectual Property Organization, pursuant to the Patent Cooperation Treaty.

6. A record in this system of records may be disclosed, as a routine use, to another federal agency for purposes of National Security review (35 U.S.C. 181) and for review pursuant to the Atomic Energy Act (42 U.S.C. 218(c)).

7. A record from this system of records may be disclosed, as a routine use, to the Administrator, General Services, or his/her designee, during an inspection of records conducted by GSA as part of that agency's responsibility to recommend improvements in records management practices and programs, under authority of 44 U.S.C. 2904 and 2906. Such disclosure shall be made in accordance with the GSA regulations governing inspection of records for this purpose, and any other relevant (i.e., GSA or Commerce) directive. Such disclosure shall not be used to make determinations about individuals.

8. A record from this system of records may be disclosed, as a routine use, to the public after either publication of the application pursuant to 35 U.S.C. 122(b) or issuance of a patent pursuant to 35 U.S.C. 151. Further, a record may be disclosed, subject to the limitations of 37 CFR 1.14, as a routine use, to the public if the record was filed in an application which became abandoned or in which the proceedings were terminated and which application is referenced by either a published application, an application open to public inspections or an issued patent.

9. A record from this system of records may be disclosed, as a routine use, to a Federal, State, or local law enforcement agency, if the USPTO becomes aware of a violation or potential violation of law or regulation.

UNITED STATES PATENT AND TRADEMARK OFFICE

Commissioner for Patents
United States Patent and Trademark Office
P.O. Box 1450
Alexandria, VA 22313-1450
www.uspto.gov

PEARL COHEN ZEDEK LATZER, LLP
1500 BROADWAY
12TH FLOOR
NEW YORK, NY 10036

MAILED

MAR 11 2011

OFFICE OF PETITIONS

In re Patent No. 6,189,597 :
Issue Date: February 20, 2001 :
Application No. 09/418,172 : ON PETITION
Filed: October 13, 1999 :
Attorney Docket No. P-73512-US :

This is a decision on the petition under 37 CFR 1.378(c), filed October 7, 2009, to accept the delayed payment of a maintenance fee for the above-identified patent.

The petition is **DISMISSED**.

A grantable petition to accept the unintentionally delayed payment of a maintenance fee under 35 U.S.C. 41(c) and 37 CFR 1.378(c) must be accompanied by: (1) a statement that the delay was unintentional; (2) payment of the appropriate maintenance fee, unless previously submitted; (3) payment of the surcharge set forth in 37 CFR 1.20(i)(2).

The petition lacks item (2) and (3), above. The total fees required to reinstate this patent on October 7, 2009, is $2,480 for the 7 ½ year maintenance fee and $1,640 for the petition surcharge. The person signing the petition, Morris E. Cohen is currently not an authorized user on the indicated deposit account and therefore the fees are deficient. Accordingly, this patent cannot be reinstated until the appropriate fees have been submitted.

If reconsideration of this decision is desired, a petition for reconsideration under 37 CFR 1.378(e) must be filed within TWO (2) MONTHS from the mail date of this decision. No extension of this two-month time limit can be granted under 37 CFR 1.136(a) or (b). This is **not** a final agency action within the meaning of 5 U.S.C. § 704.

Any petition for reconsideration of this decision must be accompanied by the petition fee of $400 as set forth in 37 CFR 1.17(f). The petition for reconsideration must include the lacking item(s) noted above, since, after a decision on the petition for reconsideration, no further reconsideration or review of the matter will be undertaken by the Director.

Further correspondence with respect to this matter should be addressed as follows:

By mail: Mail Stop PETITION
Commissioner for Patents
Post Office Box 1450
Alexandria, VA 22313-1450

By hand: U. S. Patent and Trademark Office
Customer Service Window, Mail Stop Petitions
Randolph Building
401 Dulany Street
Alexandria, VA 22314

The centralized facsimile number is (571) 273-8300.

Telephone inquiries should be directed to the undersigned at (571) 272-6059.

Alicia Kelley
Petitions Examiner
Office of Petitions

UNITED STATES PATENT AND TRADEMARK OFFICE

Commissioner for Patents
United States Patent and Trademark Office
P.O. Box 1450
Alexandria, VA 22313-1450
www.uspto.gov

PEARL COHEN ZEDEK LATZER, LLP
1500 BROADWAY
12TH FLOOR
NEW YORK, NY 10036

MAILED
JUN 02 2011
OFFICE OF PETITIONS

In re Patent No. 6,189,597 :
Issue Date: February 20, 2001 :
Application No. 09/418,172 : ON PETITION
Filed: October 13, 1999 :
Attorney Docket No. P-73512-US :

This is a decision on the renewed petition under 37 CFR 1.378(c), filed April 7, 2011, to accept the delayed payment of a maintenance fee for the above-identified patent.

The petition is **GRANTED**.

This patent expired on February 20, 2009, for failure to pay the 7 ½ year maintenance fee. On October 7, 2009, a petition under 37 CFR 1.378(c) was filed, however; the petition was dismissed on March 11, 2011, because of insufficient funds. The renewed petition filed on April 7, 2011, satisfies the fee requirements of 37 CFR 1.378(c).

Since this petition was submitted within twenty-four months after the six-month grace period provided in 37 CFR 1.362(e), the petition was timely filed under the provisions of 37 CFR 1.378(c).

The file does not indicate a change of address has been submitted, although the address given on the petition differs from the address of record. If appropriate, a change of address should be filed in accordance with MPEP 601.03. A courtesy copy of this decision is being mailed to the address given on the petition; however, the Office will mail all future correspondence solely to the address of record.

The maintenance fee is hereby accepted and the above-identified patent is reinstated as of the mail date of this decision.

A. Kelley-Collier

Alicia Kelley-Collier
Petitions Examiner
Office of Petitions

cc: LAW OFFICE OF MORRIS E. COHEN, ESQ.
1122 CONEY ISLAND AVE., SUITE 217
BROOKLYN, NY 11230

SPE RESPONSE FOR CERTIFICATE OF CORRECTION

Paper No.: _____

DATE : 12/28/10
TO SPE OF : ART UNIT 2432

SUBJECT : Request for Certificate of Correction for Appl. No.: 09418626 Patent No.: 6789202
CofC mailroom date: 12/16/10

Please respond to this request for a certificate of correction within 7 days.

FOR IFW FILES:

Please review the requested changes/corrections as shown in the **COCIN** document(s) in the IFW application image. No new matter should be introduced, nor should the scope or meaning of the claims be changed.

Please complete the response (see below) and forward the completed response to scanning using document code **COCX**.

FOR PAPER FILES:

Please review the requested changes/corrections as shown in the attached certificate of correction. Please complete this form (see below) and forward it with the file to:

Certificates of Correction Branch (CofC)
Randolph Square – 9D10-A
Palm Location 7580
You can fax the Directors/SPE response to 571-270-9990

Lamonte Newsome
Certificates of Correction Branch
571-272-3421

Thank You For Your Assistance

The request for issuing the above-identified correction(s) is hereby:
Note your decision on the appropriate box.

❑ **Approved**	**All** changes apply.
xApproved in Part	Specify below which changes **do not** apply.
❑ **Denied**	State the reasons for denial below.

Comments: The change of "description" to –design— is approved. However, the change should occur on col. 8, line 47 instead of col. 8, line 48. This change was approved by Kevin Zilka on 29 December 2010.

SPE /GBJ/ **Art Unit** 2432

SPE RESPONSE FOR CERTIFICATE OF CORRECTION

Paper No.: _____

DATE : 12/28/10
TO SPE OF : ART UNIT 2432

SUBJECT : Request for Certificate of Correction for Appl. No.: 09418626 Patent No.: 6789202
CofC mailroom date: 12/16/10

Please respond to this request for a certificate of correction within 7 days.

FOR IFW FILES:

Please review the requested changes/corrections as shown in the **COCIN** document(s) in the IFW application image. No new matter should be introduced, nor should the scope or meaning of the claims be changed.

Please complete the response (see below) and forward the completed response to scanning using document code **COCX**.

FOR PAPER FILES:

Please review the requested changes/corrections as shown in the attached certificate of correction. Please complete this form (see below) and forward it with the file to:

Certificates of Correction Branch (CofC)
Randolph Square – 9D10-A
Palm Location 7580
You can fax the Directors/SPE response to 571-270-9990

Lamonte Newsome
Certificates of Correction Branch
571-272-3421

Thank You For Your Assistance

The request for issuing the above-identified correction(s) is hereby:
Note your decision on the appropriate box.

☐ **Approved**	**All** changes apply.
xApproved in Part	Specify below which changes **do not** apply.
☐ **Denied**	State the reasons for denial below.

Comments: The change of "description" to –design—is approved. However, the change should occur on col. 8, line 47 instead of col. 8, line 48. This change was approved by Kevin Zilka on 29 December 2010.

SPE /GBJ/ **Art Unit** 2432

UNITED STATES PATENT AND TRADEMARK OFFICE

Commissioner for Patents
United States Patent and Trademark Office
P.O. Box 1450
Alexandria, VA 22313-1450
www.uspto.gov

GREENBERG TRAURIG LLP (LA)
c/o: Greenberg Traurig LLP Chicago Office
77 West Wacker Drive, Suite 3100
INTELLECTUAL PROPERTY DEPARTMENT
Chicago IL 60601

MAILED
OCT 07 2011
OFFICE OF PETITIONS

In re Patent No. 6,730,023 :
Issue Date: May 4, 2004 :
Application No. 09/419,192 : NOTICE
Filed: October 15, 1999 :
Attorney Docket No. 058034-013400 :

This is a notice regarding your request for acceptance of a fee deficiency submission under 37 CFR 1.28 filed September 16, 2011. On September 1, 1998, the Court of Appeals for the Federal Circuit held that 37 CFR 1.28(c) is the sole provision governing the time for correction of the erroneous payment of the issue fee as a small entity. **See DH Technology v. Synergystex International, Inc. 154 F.3d 1333, 47 USPQ2d 1865 (Fed. Cir. Sept. 1, 1998).**

The Office no longer investigates or rejects original or reissue applications under 37 CFR 1.56. **1098 Off. Gaz. Pat. Office 502 (January 3, 1989)**. Therefore, nothing in this Notice is intended to imply that an investigation was done.

Your fee deficiency submission under 37 CFR 1.28 is hereby accepted. The petition is **GRANTED**.

This application is no longer entitled to small entity status. Accordingly, all future fees paid in this application must be paid at the large entity rate.

This file is being forwarded to Files Repository.

Telephone inquiries related to this decision should be directed to the Kimberly Inabinet at (571) 272-4618.

/Kimberly Inabinet/
Kimberly Inabinet
Petitions Examiner
Office of Petitions

UNITED STATES PATENT AND TRADEMARK OFFICE

Commissioner for Patents
United States Patent and Trademark Office
P.O. Box 1450

MAILED
FEB 14 2012
OFFICE OF PETITIONS

DR. MARK FRIEDMAN LTD
C/O BILL POLKINGHORN - DISCOVERY DISPATCH
9003 FLORIN WAY
UPPER MARLBORO MD 20772

In re Patent No. 6,316,141 :
Issue Date: November 13, 2001 : ON PETITION
Application No.: 09/419,940 :
Filed: October 18, 1999 :

This is a decision on the petition under 37 CFR 1.378(c), filed November 14, 2011, to accept the delayed payment of a maintenance fee for the above-identified patent.

The petition is **GRANTED**.

The above-identified patent issued on November 13, 2001. Therefore, the set forth period in 35 U.S.C. § 41(b) for paying the seven and one-half year maintenance fee expired on November 13, 2009. Since this petition was submitted within twenty-four months after the six-month grace period provided in 37 CFR 1.362(e), the petition was timely filed under the provisions of 37 CFR 1.378(c).

The maintenance fee is hereby accepted and the above-identified patent is reinstated as of the mailing date of this decision.

The file does not indicate a change of address has been submitted, although the address given on the petition differs from the address of record. If appropriate, a change of fee address (form PTO/SB/47) and a request for customer number (form PTO/SB/125) should be filed in accordance with Manual of Patent Examining Procedure, section 2540. A courtesy copy of this decision is being mailed to the address on the petition. However, the Office will mail all future correspondence solely to the address of record.

Telephone inquiries relating to this decision should be directed to Robert DeWitty (571-272-8427).

Ramesh Krishnamurthy
Petitions Examiner
Office of Petitions

cc: Mary Rose Scozzafava
Wilmer Cutler Pickering Hale and Dorr, LLP
60 State Street
Boston, MA 02109

UNITED STATES PATENT AND TRADEMARK OFFICE

Commissioner for Patents
United States Patent and Trademark Office
P.O. Box 1450
Alexandria, VA 22313-1450
www.uspto.gov

Elliott Porco
P.O. Box 240
Bronx, NY 10461

MAILED

JUN 27 2011

OFFICE OF PETITIONS

In re Patent No. 6,290,049 :
Issue Date: 09/18/2001 :
Application No. 09/420,357 : DECISION ON PETITION
Filed: 10/18/1999 :
Title: DATA GENERATING DEVICE FOR :
BULK VENDING MACHINES :

This is in response to the petition under 37 CFR 1.137(a), filed May 23, 2011, which is properly treated as a petition under 37 CFR 1.378(b) to accept the unavoidably delayed payment of the maintenance fee in an expired patent. This is also in response to the petition under 37 CFR 1.182, filed June 16, 2011, to expedite consideration of the petition.

The petition to expedite under 37 CFR 1.182 is granted.

The petition under 37 CFR 1.378(b) is dismissed. If reconsideration of this decision on the petition under 37 CFR 1.378(b) is desired, a petition under 37 CFR 1.378(e) must be submitted within **TWO (2) MONTHS** from the mail date of this decision. No extensions of time are permitted under 37 CFR 1.136. The $400.00 petition fee set forth in § 1.17(f) must accompany any petition for reconsideration. After a decision on the petition for reconsideration, the Director will undertake no further reconsideration or review of the matter. If the delayed payment of the maintenance fee is not accepted, the maintenance fee and the surcharge set forth in § 1.20(i) will be refunded following the decision on the petition for reconsideration, or after the expiration of the time for filing such a petition for reconsideration, if none is filed. The $400.00 petition fee will not be refunded unless the refusal to accept and record the maintenance fee is determined to result from an error by the United States Patent and Trademark Office (USPTO).

The patent issued on September 18, 2001. The second maintenance fee could have been paid during the period from September 18, 2008 through March 18, 2009, or with a surcharge during the period from March 19, 2009 through September 18, 2009. Accordingly, this patent expired on September 19, 2009, for failure to timely remit the second maintenance fee.

The Office reminds petitioner that a grantable petition to accept a delayed maintenance fee payment under 37 CFR 1.378(b) must include the following:

> (1) the required maintenance fee set forth in § 1.20(e) through (g);
>
> (2) the surcharge set forth in § 1.20(i)(1); and
>
> (3) a showing that the delay was unavoidable since reasonable care was taken to ensure that the maintenance fee would be paid timely and that the petition was filed promptly after the patentee was notified of, or otherwise became aware of, the expiration of the patent. The showing must enumerate the steps taken to ensure timely payment of the maintenance fee, the date and the manner in which patentee became aware of the expiration of the patent, and the steps taken to file the petition promptly.

The Office further reminds petitioner that pursuant to 37 CFR 1.378(d), a petition under 37 CFR 1.378 must be signed by an attorney or agent registered to practice before the Patent and Trademark Office, or by the patentee, the assignee, or other party in interest.

The USPTO records show that assignments to NOVA RESOLUTION INDUSTRIES, INC. were recorded with the USPTO on April 17, 2001, and November 23, 2004. Thus, an attorney or agent registered to practice before the USPTO, the patentee, and the assignee, NOVA RESOLUTION INDUSTRIES, INC., are proper parties to file a petition under 37 CFR 1.378. In this instance, Elliott Porco signed the present petition; however, there is no indication in the USPTO's records that Elliott Porco is an attorney or agent registered to practice before the USPTO. Moreover, Mr. Porco has not shown that he has authority to sign on behalf of the assignee, NOVA RESOLUTION INDUSTRIES, INC. Specifically, neither the present petition nor the patent file include a Statement under 37 CFR 3.73(b) authorizing Mr.

Porco to act on behalf of the assignee.[1] The Office will not presume from the filing of the present petition that Mr. Porco is a proper party pursuant to 37 CFR 1.378(d). See generally MPEP 324 and 37 CFR 3.73(b). Accordingly, it is concluded that the petition is improperly signed. In order for Mr. Porco to take action in this matter, Mr. Porco must submit a completed Statement Under 37 CFR 3.73(b) form with any "renewed" petition. The appropriate form is enclosed for petitioner's convenience.

Petitioner may wish to consider filing a petition under 37 CFR 1.378(c), requesting that the Office accept the unintentionally delayed payment of the second maintenance fee, instead of filing a renewed petition for reconsideration under 37 CFR 1.378(b)/(e).

A petition under 37 CFR 1.378(c) must be filed within twenty four months from the end of the six month grace period (i.e., the expiration date of the patent) and be accompanied by (1) a verified statement that the delay was unintentional, (2) payment of the appropriate maintenance fee, unless previously submitted, and (3) payment of the $1,640.00 surcharge **(the $700.00 surcharge previously paid may be credited thereto leaving a balance due of $940.00)** set forth in 37 CFR 1.20(i)(2). A copy of the appropriate form for filing a petition under 37 CFR 1.378(c) accompanies the decision.

---

[1] Pursuant to 37 CFR 3.73:

> (b)(1) In order to request or take action in a patent or trademark matter, the assignee must establish its ownership of the patent or trademark property of paragraph (a) of this section to the satisfaction of the Director. The establishment of ownership by the assignee may be combined with the paper that requests or takes the action. Ownership is established by submitting to the Office a signed statement identifying the assignee, accompanied by either:
>
> (i) Documentary evidence of a chain of title from the original owner to the assignee (*e.g.*, copy of an executed assignment)…For patent matters only, the submission of the documentary evidence must be accompanied by a statement affirming that the documentary evidence of the chain of title from the original owner to the assignee was or concurrently is being submitted for recordation pursuant to § 3.11; or
>
> (ii) A statement specifying where documentary evidence of a chain of title from the original owner to the assignee is recorded in the assignment records of the Office (*e.g.*, reel and frame number).
>
> (2) The submission establishing ownership must show that the person signing the submission is a person authorized to act on behalf of the assignee by:
>
> (i) Including a statement that the person signing the submission is authorized to act on behalf of the assignee; or
>
> (ii) Being signed by a person having apparent authority to sign on behalf of the assignee, *e.g.*, an officer of the assignee.

The Office notes that the patent file does not indicate a change of address has been filed in this case, although the address given on the petition differs from the address of record. If the Mr. Porco desires to receive future correspondence regarding this patent, a change of correspondence address (and a power of attorney, if applicable) should be submitted. The appropriate change of correspondence address form accompanies this decision. As a one-time courtesy the Office is mailing this decision to the address provided by Mr. Porco. However, the Office will continue to send correspondence to the address of record until otherwise notified.

Further correspondence with respect to this matter should be addressed as follows:

By mail: Mail Stop Petition
Commissioner for Patents
P.O. Box 1450
Alexandria, VA 22313-1450

By fax: (571) 273-8300
ATTN: Office of Petitions

By hand: Customer Service Window
Randolph Building
401 Dulany Street
Alexandria, VA 22314

Correspondence may also be submitted electronically via the USPTO electronic filing system.

Telephone inquiries related to this decision should be directed to the undersigned at (571) 272-3211.

C. T. Donnell

Christina Tartera Donnell
Senior Petitions Attorney
Office of Petitions

Enclosures: Form PTO/SB/66; Form PTO/SB/96; Form PTO/SB/123; and Privacy Act Statement

UNITED STATES PATENT AND TRADEMARK OFFICE

Commissioner for Patents
United States Patent and Trademark Office
P.O. Box 1450
Alexandria, VA 22313-1450
www.uspto.gov

In re Patent No. 6290049
Issue Date: September 18,2001
Application No. 09420357
Filed: October 18,1999
Attorney Docket No. 161/1

:
:DECISION GRANTING PETITION
:UNDER 37 CFR 1.378(c)
:

This is a decision on the electronic petition, filed August 23,2011 ,under 37 CFR 1.378(c) to accept the unintentionally delayed payment of the 7.5 year maintenance fee for the above-identified patent.

The petition is **GRANTED**.

The maintenance fee is accepted, and the above-identified patent reinstated as of August 23,2011 . This decision also constitutes notice that the fee has been accepted. An electronic copy of the petition and this decision has been created as an entry in the Image File Wrapper. Nevertheless, petitioner should print and retain an independent copy.

Telephone inquiries related to this electronic decision should be directed to the Electronic Business Center at 1-866-217-9197.

PTO/SB/66 (03-09)
Approved for use through 03/31/2012. OMB 0651-0016
U.S. Patent and Trademark Office: U.S. DEPARTMENT OF COMMERCE
Under the Paperwork Reduction Act of 1995, no persons are required to respond to a collection of information unless it displays valid OMB control number.

PETITION TO ACCEPT UNINTENTIONALLY DELAYED PAYMENT OF MAINTENANCE FEE IN AN EXPIRED PATENT (37 CFR 1.378(c))

Patent Number	Issue Date (YYYY-MM-DD)	Application Number	Filing Date (YYYY-MM-DD)	Docket Number (if applicable)
6290049	2001-09-18	09/420,357	1999-10-18	757.001

CAUTION: Maintenance fee (and surcharge, if any) payment must correctly identify: (1) the patent number and (2) the application number of the actual U.S. application leading to issuance of that patent to ensure the fee(s) is/are associated with the correct patent. 37 CFR 1.366(c) and (d).

SMALL ENTITY

☒ Patentee claims, or has previously claimed, small entity status. See 37 CFR 1.27.

LOSS OF ENTITLEMENT TO SMALL ENTITY STATUS

☐ Patentee is no longer entitled to small entity status. See 37 CFR 1.27(g)

NOT Small Entity	Fee	Code	Small Entity	Fee	Code
○	3 ½ year	(1551)	○	3 ½ year	(2551)
○	7 ½ year	(1552)	◉	7 ½ year	(2552)
○	11 ½ year	(1553)	○	11 ½ year	(2553)

SURCHARGE

The surcharge required by 37 CFR 1.20(i)(2) (Fee Code 1558) must be paid as a condition of accepting unintentionally delayed payment of the maintenance fee.

MAINTENANCE FEE (37 CFR 1.20(e)-(g))

The appropriate maintenance fee must be submitted with this petition.

STATEMENT

THE UNDERSIGNED CERTIFIES THAT THE DELAY IN PAYMENT OF THE MAINTENANCE FEE TO THIS PATENT WAS UNINTENTIONAL

PETITIONER(S) REQUEST THAT THE DELAYED PAYMENT OF THE MAINTENANCE FEE BE ACCEPTED AND THE PATENT REINSTATED

THIS PORTION MUST BE COMPLETED BY THE SIGNATORY OR SIGNATORIES

37 CFR 1.378(d) states: "Any petition under this section must be signed by an attorney or agent registered to practice before the Patent and Trademark Office, or by the patentee, the assignee, or other party in interest."

I certify, in accordance with 37 CFR 1.4(d)(4) that I am

◉ An attorney or agent registered to practice before the Patent and Trademark Office

○ A sole patentee

○ A joint patentee; I certify that I am authorized to sign this submission on behalf of all the other patentees.

○ A joint patentee; all of whom are signing this e-petition

○ The assignee of record of the entire interest

PTO/SB/66 (03-09)
Approved for use through 03/31/2012. OMB 0651-0016
U.S. Patent and Trademark Office: U.S. DEPARTMENT OF COMMERCE
Under the Paperwork Reduction Act of 1995, no persons are required to respond to a collection of information unless it displays valid OMB control number.

Patent Practitioner			
A signature of the applicant or representative is required in accordance with 37 CFR 1.33 and 10.18. Please see 37 CFR 1.4(d) for the form of the signature			
Signature	/Cliff Hyra/	Date (YYYY-MM-DD)	2011-08-23
Name	Clifford D. Hyra	Registration Number	60086

This collection of information is required by 37 CFR 1.378(c). The information is required to obtain or retain a benefit by the public which is to file (and by the USPTO to process) an application. Confidentiality is governed by 35 U.S.C. 122 and 37 CFR 1.11 and 1.14. This collection is estimated to take 1 hour to complete, including gathering, preparing, and submitting the completed application form to the USPTO. Time will vary depending upon the individual case. Any comments on the amount of time you require to complete this form and/ or suggestions for reducing this burden, should be sent to the Chief Information Officer, U.S. Patent and Trademark Office, U.S. Department of Commerce, P.O. Box 1450, Alexandria, VA 22313-1450. DO NOT SEND FEES OR COMPLETED FORMS TO THIS ADDRESS. **This form can only be used when in conjunction with EFS-Web. If this form is mailed to the USPTO, it may cause delays in reinstating the patent.**

Privacy Act Statement

The Privacy Act of 1974 (P.L. 93-579) requires that you be given certain information in connection with your submission of the attached form related to a patent application or patent. Accordingly, pursuant to the requirements of the Act, please be advised that: (1) the general authority for the collection of this information is 35 U.S.C. 2(b)(2); (2) furnishing of the information solicited is voluntary; and (3) the principal purpose for which the information is used by the U.S. Patent and Trademark Office is to process and/or examine your submission related to a patent application or patent. If you do not furnish the requested information, the U.S. Patent and Trademark Office may not be able to process and/or examine your submission, which may result in termination of proceedings or abandonment of the application or expiration of the patent.

The information provided by you in this form will be subject to the following routine uses:

1. The information on this form will be treated confidentially to the extent allowed under the Freedom of Information Act (5 U.S.C. 552) and the Privacy Act (5 U.S.C. 552a). Records from this system of records may be disclosed to the Department of Justice to determine whether the Freedom of Information Act requires disclosure of these records.

2. A record from this system of records may be disclosed, as a routine use, in the course of presenting evidence to a court, magistrate, or administrative tribunal, including disclosures to opposing counsel in the course of settlement negotiations.

3. A record in this system of records may be disclosed, as a routine use, to a Member of Congress submitting a request involving an individual, to whom the record pertains, when the individual has requested assistance from the Member with respect to the subject matter of the record.

4. A record in this system of records may be disclosed, as a routine use, to a contractor of the Agency having need for the information in order to perform a contract. Recipients of information shall be required to comply with the requirements of the Privacy Act of 1974, as amended, pursuant to 5 U.S.C. 552a(m).

5. A record related to an International Application filed under the Patent Cooperation Treaty in this system of records may be disclosed, as a routine use, to the International Bureau of the World Intellectual Property Organization, pursuant to the Patent Cooperation Treaty.

6. A record in this system of records may be disclosed, as a routine use, to another federal agency for purposes of National Security review (35 U.S.C. 181) and for review pursuant to the Atomic Energy Act (42 U.S.C. 218(c)).

7. A record from this system of records may be disclosed, as a routine use, to the Administrator, General Services, or his/her designee, during an inspection of records conducted by GSA as part of that agency's responsibility to recommend improvements in records management practices and programs, under authority of 44 U.S.C. 2904 and 2906. Such disclosure shall be made in accordance with the GSA regulations governing inspection of records for this purpose, and any other relevant (i.e., GSA or Commerce) directive. Such disclosure shall not be used to make determinations about individuals.

8. A record from this system of records may be disclosed, as a routine use, to the public after either publication of the application pursuant to 35 U.S.C. 122(b) or issuance of a patent pursuant to 35 U.S.C. 151. Further, a record may be disclosed, subject to the limitations of 37 CFR 1.14, as a routine use, to the public if the record was filed in an application which became abandoned or in which the proceedings were terminated and which application is referenced by either a published application, an application open to public inspections or an issued patent.

9. A record from this system of records may be disclosed, as a routine use, to a Federal, State, or local law enforcement agency, if the USPTO becomes aware of a violation or potential violation of law or regulation.

UNITED STATES PATENT AND TRADEMARK OFFICE

Commissioner for Patents
United States Patent and Trademark Office
P.O. Box 1450
Alexandria, VA 22313-1450
www.uspto.gov

HYRA IP, PLC
11710 PLAZA AMERICA DRIVE
SUITE 2000
RESTON VA 20190

MAILED

SEP 08 2011

OFFICE OF PETITIONS

In re Patent No. 6,290,049 :
Issue Date: September 18, 2001 :
Application No. 09/420,357 : DECISION ON REQUEST FOR REFUND
Filed: October 18, 1999 :
Attorney Docket No. 757.002 :

This is a decision on the Request For Refund filed August 23, 2011.

Applicant should note that the request for refund reference **Application No. 11/131,887** instead of the correct **Application No. 09/420,357**.

The request is **GRANTED**.

Applicant files the above request for refund and states that, "Pursuant to 35 U.S.C. 42(d) and 37 CFR 1.26, Applicant requests that the Office refund the fees paid for the above identified patent on August 23, 2011 in excess of the amount required for payment of the small entity 7.5 year maintenance fee and petition to accept late payment of maintenance fee payment."

Applicant further states that, "The total amount due was $1,640 for the late payment surcharge plus $1,240 for the small entity 7.5 year maintenance fee payment, for a total of $2,880. Payment of the $1,240 maintenance fee and a $700 petition fee payment were made on May 23, 2011 with the initial petition filing. In the decision on the initial petition, the Office of Petitions noted that "the $700 surcharge previously paid may be credited thereto leaving a balance due of $940." In the petition filed August 23, 2011, a payment in the amount of $2880 was made. Thus, a refund is requested of the excess fees paid, equal to the amount paid ($2880) minus the balance due ($940) for a total refund of $1940.

In view of the above, and a review of the Office finance records for the above-identified application, the request for refund is granted. A total of $1,940.00 is being credited to applicant's credit card account as it is the method in which the fee was paid.

Any questions concerning this matter may be directed to the undersigned at (571) 272-3208.

/KOC/
Karen Creasy
Petitions Examiner
Office of Petitions

UNITED STATES PATENT AND TRADEMARK OFFICE

Commissioner for Patents
United States Patent and Trademark Office
P.O. Box 1450
Alexandria, VA 22313-1450
www.uspto.gov

In re Patent No. 6341217
Issue Date: January 22,2002
Application No. 09420953
Filed: October 19,1999
Attorney Docket No. 004145.P002X

:
:DECISION GRANTING PETITION
:UNDER 37 CFR 1.378(c)
:

This is a decision on the electronic petition, filed May 6,2011 ,under 37 CFR 1.378(c) to accept the unintentionally delayed payment of the 7.5 year maintenance fee for the above-identified patent.

The petition is **GRANTED**.

The maintenance fee is accepted, and the above-identified patent reinstated as of May 6,2011 .
This decision also constitutes notice that the fee has been accepted. An electronic copy of the petition and this decision has been created as an entry in the Image File Wrapper. Nevertheless, petitioner should print and retain an independent copy.

Telephone inquiries related to this electronic decision should be directed to the Electronic Business Center at 1-866-217-9197.

PTO/SB/66 (03-09)
Approved for use through 03/31/2012. OMB 0651-0016
U.S. Patent and Trademark Office: U.S. DEPARTMENT OF COMMERCE
Under the Paperwork Reduction Act of 1995, no persons are required to respond to a collection of information unless it displays valid OMB control number.

PETITION TO ACCEPT UNINTENTIONALLY DELAYED PAYMENT OF MAINTENANCE FEE IN AN EXPIRED PATENT (37 CFR 1.378(c))

Patent Number	Issue Date (YYYY-MM-DD)	Application Number	Filing Date (YYYY-MM-DD)	Docket Number (if applicable)
6341217	2002-01-22	09420953	1999-10-19	8986.000.US

CAUTION: Maintenance fee (and surcharge, if any) payment must correctly identify: (1) the patent number and (2) the application number of the actual U.S. application leading to issuance of that patent to ensure the fee(s) is/are associated with the correct patent. 37 CFR 1.366(c) and (d).

SMALL ENTITY

☒ Patentee claims, or has previously claimed, small entity status. See 37 CFR 1.27.

LOSS OF ENTITLEMENT TO SMALL ENTITY STATUS

☐ Patentee is no longer entitled to small entity status. See 37 CFR 1.27(g)

NOT Small Entity			Small Entity		
	Fee	Code		Fee	Code
○	3 ½ year	(1551)	○	3 ½ year	(2551)
○	7 ½ year	(1552)	◉	7 ½ year	(2552)
○	11 ½ year	(1553)	○	11 ½ year	(2553)

SURCHARGE

The surcharge required by 37 CFR 1.20(i)(2) (Fee Code 1558) must be paid as a condition of accepting unintentionally delayed payment of the maintenance fee.

MAINTENANCE FEE (37 CFR 1.20(e)-(g))

The appropriate maintenance fee must be submitted with this petition.

STATEMENT

THE UNDERSIGNED CERTIFIES THAT THE DELAY IN PAYMENT OF THE MAINTENANCE FEE TO THIS PATENT WAS UNINTENTIONAL

PETITIONER(S) REQUEST THAT THE DELAYED PAYMENT OF THE MAINTENANCE FEE BE ACCEPTED AND THE PATENT REINSTATED

THIS PORTION MUST BE COMPLETED BY THE SIGNATORY OR SIGNATORIES

37 CFR 1.378(d) states: "Any petition under this section must be signed by an attorney or agent registered to practice before the Patent and Trademark Office, or by the patentee, the assignee, or other party in interest."

I certify, in accordance with 37 CFR 1.4(d)(4) that I am

◉ An attorney or agent registered to practice before the Patent and Trademark Office

○ A sole patentee

○ A joint patentee; I certify that I am authorized to sign this submission on behalf of all the other patentees.

○ A joint patentee; all of whom are signing this e-petition

○ The assignee of record of the entire interest

PTO/SB/66 (03-09)
Approved for use through 03/31/2012. OMB 0651-0016
U.S. Patent and Trademark Office: U.S. DEPARTMENT OF COMMERCE
Under the Paperwork Reduction Act of 1995, no persons are required to respond to a collection of information unless it displays valid OMB control number.

Patent Practitioner			
A signature of the applicant or representative is required in accordance with 37 CFR 1.33 and 10.18. Please see 37 CFR 1.4(d) for the form of the signature			
Signature	/Vincent M DeLuca/	Date (YYYY-MM-DD)	2011-05-06
Name	Vincent M DeLuca	Registration Number	32408

This collection of information is required by 37 CFR 1.378(c). The information is required to obtain or retain a benefit by the public which is to file (and by the USPTO to process) an application. Confidentiality is governed by 35 U.S.C. 122 and 37 CFR 1.11 and 1.14. This collection is estimated to take 1 hour to complete, including gathering, preparing, and submitting the completed application form to the USPTO. Time will vary depending upon the individual case. Any comments on the amount of time you require to complete this form and/ or suggestions for reducing this burden, should be sent to the Chief Information Officer, U.S. Patent and Trademark Office, U.S. Department of Commerce, P.O. Box 1450, Alexandria, VA 22313-1450. DO NOT SEND FEES OR COMPLETED FORMS TO THIS ADDRESS. **This form can only be used when in conjunction with EFS-Web. If this form is mailed to the USPTO, it may cause delays in reinstating the patent.**

Privacy Act Statement

The Privacy Act of 1974 (P.L. 93-579) requires that you be given certain information in connection with your submission of the attached form related to a patent application or patent. Accordingly, pursuant to the requirements of the Act, please be advised that: (1) the general authority for the collection of this information is 35 U.S.C. 2(b)(2); (2) furnishing of the information solicited is voluntary; and (3) the principal purpose for which the information is used by the U.S. Patent and Trademark Office is to process and/or examine your submission related to a patent application or patent. If you do not furnish the requested information, the U.S. Patent and Trademark Office may not be able to process and/or examine your submission, which may result in termination of proceedings or abandonment of the application or expiration of the patent.

The information provided by you in this form will be subject to the following routine uses:

1. The information on this form will be treated confidentially to the extent allowed under the Freedom of Information Act (5 U.S.C. 552) and the Privacy Act (5 U.S.C. 552a). Records from this system of records may be disclosed to the Department of Justice to determine whether the Freedom of Information Act requires disclosure of these records.

2. A record from this system of records may be disclosed, as a routine use, in the course of presenting evidence to a court, magistrate, or administrative tribunal, including disclosures to opposing counsel in the course of settlement negotiations.

3. A record in this system of records may be disclosed, as a routine use, to a Member of Congress submitting a request involving an individual, to whom the record pertains, when the individual has requested assistance from the Member with respect to the subject matter of the record.

4. A record in this system of records may be disclosed, as a routine use, to a contractor of the Agency having need for the information in order to perform a contract. Recipients of information shall be required to comply with the requirements of the Privacy Act of 1974, as amended, pursuant to 5 U.S.C. 552a(m).

5. A record related to an International Application filed under the Patent Cooperation Treaty in this system of records may be disclosed, as a routine use, to the International Bureau of the World Intellectual Property Organization, pursuant to the Patent Cooperation Treaty.

6. A record in this system of records may be disclosed, as a routine use, to another federal agency for purposes of National Security review (35 U.S.C. 181) and for review pursuant to the Atomic Energy Act (42 U.S.C. 218(c)).

7. A record from this system of records may be disclosed, as a routine use, to the Administrator, General Services, or his/her designee, during an inspection of records conducted by GSA as part of that agency's responsibility to recommend improvements in records management practices and programs, under authority of 44 U.S.C. 2904 and 2906. Such disclosure shall be made in accordance with the GSA regulations governing inspection of records for this purpose, and any other relevant (i.e., GSA or Commerce) directive. Such disclosure shall not be used to make determinations about individuals.

8. A record from this system of records may be disclosed, as a routine use, to the public after either publication of the application pursuant to 35 U.S.C. 122(b) or issuance of a patent pursuant to 35 U.S.C. 151. Further, a record may be disclosed, subject to the limitations of 37 CFR 1.14, as a routine use, to the public if the record was filed in an application which became abandoned or in which the proceedings were terminated and which application is referenced by either a published application, an application open to public inspections or an issued patent.

9. A record from this system of records may be disclosed, as a routine use, to a Federal, State, or local law enforcement agency, if the USPTO becomes aware of a violation or potential violation of law or regulation.

UNITED STATES PATENT AND TRADEMARK OFFICE

Commissioner for Patents
United States Patent and Trademark Office
P.O. Box 1450
Alexandria, VA 22313-1450
www.uspto.gov

MAILED

JUN 06 2011

OFFICE OF PETITIONS

LAW OFFICES OF RONALD M. ANDERSON
600 - 108TH AVENUE N.E., SUITE 507
BELLEVUE WA 98004

In re Application of :
Charles J. Call et al. :
Application No. 09/422,206 : NOTICE
Patent No. 6,488,900 :
Filed: October 19, 1999 :
Attorney Docket No. **MESO0010**

This is a notice regarding your request for acceptance of a fee deficiency submission under 37 CFR 1.28 May 17, 2011.

The Office no longer investigates or rejects original or reissue patent under 37 CFR 1.56. **1098 Off. Gaz. Pat. Office 502 (January 3, 1989)**. Therefore, nothing in this Notice is intended to imply that an investigation was done.

Your fee deficiency submission under 37 CFR 1.28 is hereby **ACCEPTED**.

This patent is no longer entitled to small entity status. Accordingly, all future fees paid in this patent must be paid at the large entity rate.

Inquiries related to this communication should be directed to the undersigned at (571) 272-2783.

/Tredelle D. Jackson/
Paralegal Specialist
Office of Petitions

UNITED STATES PATENT AND TRADEMARK OFFICE

Commissioner for Patents
United States Patent and Trademark Office
P.O. Box 1450
Alexandria, VA 22313-1450
www.uspto.gov

EDWARDS LIFESCIENCES CORPORATION
LEGAL DEPARTMENT
ONE EDWARDS WAY
IRVINE CA 92614

MAILED
APR 29 2011
OFFICE OF PETITIONS

In re Patent No. 6,406,420 :
Issued: June 18, 2002 :
Application No. 09/422,328 : ON PETITION
Filed: October 21, 1999 :
Attorney Docket No. PVI-6141CP3 :

This is a notice regarding your request for acceptance of a fee deficiency submission under 37 CFR 1.28 filed March 16, 2011.

On September 1, 1998, the Court of Appeals for the Federal Circuit held that 37 CFR 1.28(c) is the sole provision governing the time for correction of the erroneous payment of the issue fee as a small entity. **See DH Technology v. Synergystex International, Inc. 154 F.3d 1333, 47 USPQ2d 1865 (Fed. Cir. Sept. 1, 1998).**

The Office no longer investigates or rejects original or reissue applications under 37 CFR 1.56. **1098 Off. Gaz. Pat. Office 502 (January 3, 1989)**. Therefore, nothing in this Notice is intended to imply that an investigation was done.

Your fee deficiency submission under 37 CFR 1.28 is hereby **ACCEPTED**.

This patent is no longer entitled to small entity status. Accordingly, all future fees paid in this patent must be paid at the large entity rate.

Telephone inquires concerning this decision should be directed to the undersigned at (571) 272-7751.

/Joan Olszewski/
Joan Olszewski
Petitions Examiner
Office of Petitions

UNITED STATES PATENT AND TRADEMARK OFFICE

Commissioner for Patents
United States Patent and Trademark Office
P.O. Box 1450
Alexandria, VA 22313-1450
www.uspto.gov

BIONUMERIK PHARMACEUTICALS, INC.
8122 DATAPOINT SUITE 1250
SAN ANTONIO TX 78229

MAILED
FEB 10 2012
OFFICE OF PETITIONS

In re Patent No. 6,100,247
Issue Date: August 8, 2000
Application No. 09/422,485
Filed: October 21, 1999
Attorney Docket No. X-0122

NOTICE

This is a notice regarding your status request for acceptance of a fee deficiency submission under 37 CFR 1.28 on December 1, 2011.

The Office no longer investigates or rejects original or reissue patent under 37 CFR 1.56. **1098 Off. Gaz. Pat. Office 502 (January 3, 1989)**. Therefore, nothing in this Notice is intended to imply that an investigation was done.

As stated in the decision mailed December 10, 2010, your fee deficiency submission under 37 CFR 1.28 is hereby **ACCEPTED**.

The patent application has been updated to reflect that of Large Entity Status. This patent is no longer entitled to small entity status. Accordingly, all future fees paid in this patent must be paid at the large entity rate.

Inquiries related to this communication should be directed to the undersigned at (571) 272-3208.

/KOC/
Karen Creasy
Petitions Examiner
Office of Petitions

UNITED STATES PATENT AND TRADEMARK OFFICE

Commissioner for Patents
United States Patent and Trademark Office
P.O. Box 1450
Alexandria, VA 22313-1450
www.uspto.gov

In re Patent No. 6265182
Issue Date: July 24,2001
Application No. 09423087
Filed: February 7,2000
Attorney Docket No. 888-33

:
:DECISION GRANTING PETITION
:UNDER 37 CFR 1.378(c)
:

This is a decision on the electronic petition, filed June 5,2011 ,under 37 CFR 1.378(c) to accept the unintentionally delayed payment of the 7.5 year maintenance fee for the above-identified patent.

The petition is **GRANTED**.

The maintenance fee is accepted, and the above-identified patent reinstated as of June 5,2011 .
This decision also constitutes notice that the fee has been accepted. An electronic copy of the petition and this decision has been created as an entry in the Image File Wrapper. Nevertheless, petitioner should print and retain an independent copy.

Telephone inquiries related to this electronic decision should be directed to the Electronic Business Center at 1-866-217-9197.

PTO/SB/66 (03-09)
Approved for use through 03/31/2012. OMB 0651-0016
U.S. Patent and Trademark Office: U.S. DEPARTMENT OF COMMERCE
Under the Paperwork Reduction Act of 1995, no persons are required to respond to a collection of information unless it displays valid OMB control number.

PETITION TO ACCEPT UNINTENTIONALLY DELAYED PAYMENT OF MAINTENANCE FEE IN AN EXPIRED PATENT (37 CFR 1.378(c))

Patent Number	Issue Date (YYYY-MM-DD)	Application Number	Filing Date (YYYY-MM-DD)	Docket Number (if applicable)
6265182	2001-07-24	09423087	2000-02-07	

CAUTION: Maintenance fee (and surcharge, if any) payment must correctly identify: (1) the patent number and (2) the application number of the actual U.S. application leading to issuance of that patent to ensure the fee(s) is/are associated with the correct patent. 37 CFR 1.366(c) and (d).

SMALL ENTITY

☒ Patentee claims, or has previously claimed, small entity status. See 37 CFR 1.27.

LOSS OF ENTITLEMENT TO SMALL ENTITY STATUS

☐ Patentee is no longer entitled to small entity status. See 37 CFR 1.27(g)

NOT Small Entity			Small Entity		
	Fee	Code		Fee	Code
○	3 ½ year	(1551)	○	3 ½ year	(2551)
○	7 ½ year	(1552)	◉	7 ½ year	(2552)
○	11 ½ year	(1553)	○	11 ½ year	(2553)

SURCHARGE

The surcharge required by 37 CFR 1.20(i)(2) (Fee Code 1558) must be paid as a condition of accepting unintentionally delayed payment of the maintenance fee.

MAINTENANCE FEE (37 CFR 1.20(e)-(g))

The appropriate maintenance fee must be submitted with this petition.

STATEMENT

THE UNDERSIGNED CERTIFIES THAT THE DELAY IN PAYMENT OF THE MAINTENANCE FEE TO THIS PATENT WAS UNINTENTIONAL

PETITIONER(S) REQUEST THAT THE DELAYED PAYMENT OF THE MAINTENANCE FEE BE ACCEPTED AND THE PATENT REINSTATED

THIS PORTION MUST BE COMPLETED BY THE SIGNATORY OR SIGNATORIES

37 CFR 1.378(d) states: "Any petition under this section must be signed by an attorney or agent registered to practice before the Patent and Trademark Office, or by the patentee, the assignee, or other party in interest."

I certify, in accordance with 37 CFR 1.4(d)(4) that I am

○ An attorney or agent registered to practice before the Patent and Trademark Office

◉ A sole patentee

○ A joint patentee; I certify that I am authorized to sign this submission on behalf of all the other patentees.

○ A joint patentee; all of whom are signing this e-petition

○ The assignee of record of the entire interest

PTO/SB/66 (03-09)
Approved for use through 03/31/2012. OMB 0651-0016
U.S. Patent and Trademark Office: U.S. DEPARTMENT OF COMMERCE
Under the Paperwork Reduction Act of 1995, no persons are required to respond to a collection of information unless it displays valid OMB control number.

Sole Patentee			
A signature of the applicant or representative is required in accordance with 37 CFR 1.33 and 10.18. Please see 37 CFR 1.4(d) for the form of the signature.			
Signature	/Dr. ZUHTU TANIL KOCAGOZ/	Date (YYYY-MM-DD)	2011-06-05
Name	ZUHTU TANIL KOCAGOZ		

This collection of information is required by 37 CFR 1.378(c). The information is required to obtain or retain a benefit by the public which is to file (and by the USPTO to process) an application. Confidentiality is governed by 35 U.S.C. 122 and 37 CFR 1.11 and 1.14. This collection is estimated to take 1 hour to complete, including gathering, preparing, and submitting the completed application form to the USPTO. Time will vary depending upon the individual case. Any comments on the amount of time you require to complete this form and/ or suggestions for reducing this burden, should be sent to the Chief Information Officer, U.S. Patent and Trademark Office, U.S. Department of Commerce, P.O. Box 1450, Alexandria, VA 22313-1450. DO NOT SEND FEES OR COMPLETED FORMS TO THIS ADDRESS. **This form can only be used when in conjunction with EFS-Web. If this form is mailed to the USPTO, it may cause delays in reinstating the patent.**

Privacy Act Statement

The Privacy Act of 1974 (P.L. 93-579) requires that you be given certain information in connection with your submission of the attached form related to a patent application or patent. Accordingly, pursuant to the requirements of the Act, please be advised that: (1) the general authority for the collection of this information is 35 U.S.C. 2(b)(2); (2) furnishing of the information solicited is voluntary; and (3) the principal purpose for which the information is used by the U.S. Patent and Trademark Office is to process and/or examine your submission related to a patent application or patent. If you do not furnish the requested information, the U.S. Patent and Trademark Office may not be able to process and/or examine your submission, which may result in termination of proceedings or abandonment of the application or expiration of the patent.

The information provided by you in this form will be subject to the following routine uses:

1. The information on this form will be treated confidentially to the extent allowed under the Freedom of Information Act (5 U.S.C. 552) and the Privacy Act (5 U.S.C. 552a). Records from this system of records may be disclosed to the Department of Justice to determine whether the Freedom of Information Act requires disclosure of these records.

2. A record from this system of records may be disclosed, as a routine use, in the course of presenting evidence to a court, magistrate, or administrative tribunal, including disclosures to opposing counsel in the course of settlement negotiations.

3. A record in this system of records may be disclosed, as a routine use, to a Member of Congress submitting a request involving an individual, to whom the record pertains, when the individual has requested assistance from the Member with respect to the subject matter of the record.

4. A record in this system of records may be disclosed, as a routine use, to a contractor of the Agency having need for the information in order to perform a contract. Recipients of information shall be required to comply with the requirements of the Privacy Act of 1974, as amended, pursuant to 5 U.S.C. 552a(m).

5. A record related to an International Application filed under the Patent Cooperation Treaty in this system of records may be disclosed, as a routine use, to the International Bureau of the World Intellectual Property Organization, pursuant to the Patent Cooperation Treaty.

6. A record in this system of records may be disclosed, as a routine use, to another federal agency for purposes of National Security review (35 U.S.C. 181) and for review pursuant to the Atomic Energy Act (42 U.S.C. 218(c)).

7. A record from this system of records may be disclosed, as a routine use, to the Administrator, General Services, or his/her designee, during an inspection of records conducted by GSA as part of that agency's responsibility to recommend improvements in records management practices and programs, under authority of 44 U.S.C. 2904 and 2906. Such disclosure shall be made in accordance with the GSA regulations governing inspection of records for this purpose, and any other relevant (i.e., GSA or Commerce) directive. Such disclosure shall not be used to make determinations about individuals.

8. A record from this system of records may be disclosed, as a routine use, to the public after either publication of the application pursuant to 35 U.S.C. 122(b) or issuance of a patent pursuant to 35 U.S.C. 151. Further, a record may be disclosed, subject to the limitations of 37 CFR 1.14, as a routine use, to the public if the record was filed in an application which became abandoned or in which the proceedings were terminated and which application is referenced by either a published application, an application open to public inspections or an issued patent.

9. A record from this system of records may be disclosed, as a routine use, to a Federal, State, or local law enforcement agency, if the USPTO becomes aware of a violation or potential violation of law or regulation.

UNITED STATES PATENT AND TRADEMARK OFFICE

Commissioner for Patents
United States Patent and Trademark Office
P.O. Box 1450
Alexandria, VA 22313-1450
www.uspto.gov

In re Patent No. 6374773
Issue Date: April 23,2002
Application No. 09423722
Filed: November 12,1999
Attorney Docket No. 499-9USDLH:

:
:DECISION GRANTING PETITION
:UNDER 37 CFR 1.378(c)
:

This is a decision on the electronic petition, filed April 12,2011 ,under 37 CFR 1.378(c) to accept the unintentionally delayed payment of the 7.5 year maintenance fee for the above-identified patent.

The petition is **GRANTED**.

The maintenance fee is accepted, and the above-identified patent reinstated as of April 12,2011 . This decision also constitutes notice that the fee has been accepted. An electronic copy of the petition and this decision has been created as an entry in the Image File Wrapper. Nevertheless, petitioner should print and retain an independent copy.

Telephone inquiries related to this electronic decision should be directed to the Electronic Business Center at 1-866-217-9197.

PTO/SB/66 (03-09)
Approved for use through 03/31/2012. OMB 0651-0016
U.S. Patent and Trademark Office: U.S. DEPARTMENT OF COMMERCE
Under the Paperwork Reduction Act of 1995, no persons are required to respond to a collection of information unless it displays valid OMB control number.

PETITION TO ACCEPT UNINTENTIONALLY DELAYED PAYMENT OF MAINTENANCE FEE IN AN EXPIRED PATENT (37 CFR 1.378(c))

Patent Number	Issue Date (YYYY-MM-DD)	Application Number	Filing Date (YYYY-MM-DD)	Docket Number (if applicable)
6374773	2002-04-23	09423722	1999-11-12	

CAUTION: Maintenance fee (and surcharge, if any) payment must correctly identify: (1) the patent number and (2) the application number of the actual U.S. application leading to issuance of that patent to ensure the fee(s) is/are associated with the correct patent. 37 CFR 1.366(c) and (d).

SMALL ENTITY

☒ Patentee claims, or has previously claimed, small entity status. See 37 CFR 1.27.

LOSS OF ENTITLEMENT TO SMALL ENTITY STATUS

☐ Patentee is no longer entitled to small entity status. See 37 CFR 1.27(g)

NOT Small Entity	Fee	Code	Small Entity	Fee	Code
◯	3 ½ year	(1551)	◯	3 ½ year	(2551)
◯	7 ½ year	(1552)	◉	7 ½ year	(2552)
◯	11 ½ year	(1553)	◯	11 ½ year	(2553)

SURCHARGE

The surcharge required by 37 CFR 1.20(i)(2) (Fee Code 1558) must be paid as a condition of accepting unintentionally delayed payment of the maintenance fee.

MAINTENANCE FEE (37 CFR 1.20(e)-(g))

The appropriate maintenance fee must be submitted with this petition.

STATEMENT

THE UNDERSIGNED CERTIFIES THAT THE DELAY IN PAYMENT OF THE MAINTENANCE FEE TO THIS PATENT WAS UNINTENTIONAL

PETITIONER(S) REQUEST THAT THE DELAYED PAYMENT OF THE MAINTENANCE FEE BE ACCEPTED AND THE PATENT REINSTATED

THIS PORTION MUST BE COMPLETED BY THE SIGNATORY OR SIGNATORIES

37 CFR 1.378(d) states: "Any petition under this section must be signed by an attorney or agent registered to practice before the Patent and Trademark Office, or by the patentee, the assignee, or other party in interest."

I certify, in accordance with 37 CFR 1.4(d)(4) that I am

◉ An attorney or agent registered to practice before the Patent and Trademark Office

◯ A sole patentee

◯ A joint patentee; I certify that I am authorized to sign this submission on behalf of all the other patentees.

◯ A joint patentee; all of whom are signing this e-petition

◯ The assignee of record of the entire interest

PTO/SB/66 (03-09)
Approved for use through 03/31/2012. OMB 0651-0016
U.S. Patent and Trademark Office: U.S. DEPARTMENT OF COMMERCE
Under the Paperwork Reduction Act of 1995, no persons are required to respond to a collection of information unless it displays valid OMB control number.

Patent Practitioner			
A signature of the applicant or representative is required in accordance with 37 CFR 1.33 and 10.18. Please see 37 CFR 1.4(d) for the form of the signature			
Signature	/Benoit Castel/	Date (YYYY-MM-DD)	2011-04-12
Name	Benoit Castel	Registration Number	35041

This collection of information is required by 37 CFR 1.378(c). The information is required to obtain or retain a benefit by the public which is to file (and by the USPTO to process) an application. Confidentiality is governed by 35 U.S.C. 122 and 37 CFR 1.11 and 1.14. This collection is estimated to take 1 hour to complete, including gathering, preparing, and submitting the completed application form to the USPTO. Time will vary depending upon the individual case. Any comments on the amount of time you require to complete this form and/ or suggestions for reducing this burden, should be sent to the Chief Information Officer, U.S. Patent and Trademark Office, U.S. Department of Commerce, P.O. Box 1450, Alexandria, VA 22313-1450. DO NOT SEND FEES OR COMPLETED FORMS TO THIS ADDRESS. **This form can only be used when in conjunction with EFS-Web. If this form is mailed to the USPTO, it may cause delays in reinstating the patent.**

Privacy Act Statement

The Privacy Act of 1974 (P.L. 93-579) requires that you be given certain information in connection with your submission of the attached form related to a patent application or patent. Accordingly, pursuant to the requirements of the Act, please be advised that: (1) the general authority for the collection of this information is 35 U.S.C. 2(b)(2); (2) furnishing of the information solicited is voluntary; and (3) the principal purpose for which the information is used by the U.S. Patent and Trademark Office is to process and/or examine your submission related to a patent application or patent. If you do not furnish the requested information, the U.S. Patent and Trademark Office may not be able to process and/or examine your submission, which may result in termination of proceedings or abandonment of the application or expiration of the patent.

The information provided by you in this form will be subject to the following routine uses:

1. The information on this form will be treated confidentially to the extent allowed under the Freedom of Information Act (5 U.S.C. 552) and the Privacy Act (5 U.S.C. 552a). Records from this system of records may be disclosed to the Department of Justice to determine whether the Freedom of Information Act requires disclosure of these records.

2. A record from this system of records may be disclosed, as a routine use, in the course of presenting evidence to a court, magistrate, or administrative tribunal, including disclosures to opposing counsel in the course of settlement negotiations.

3. A record in this system of records may be disclosed, as a routine use, to a Member of Congress submitting a request involving an individual, to whom the record pertains, when the individual has requested assistance from the Member with respect to the subject matter of the record.

4. A record in this system of records may be disclosed, as a routine use, to a contractor of the Agency having need for the information in order to perform a contract. Recipients of information shall be required to comply with the requirements of the Privacy Act of 1974, as amended, pursuant to 5 U.S.C. 552a(m).

5. A record related to an International Application filed under the Patent Cooperation Treaty in this system of records may be disclosed, as a routine use, to the International Bureau of the World Intellectual Property Organization, pursuant to the Patent Cooperation Treaty.

6. A record in this system of records may be disclosed, as a routine use, to another federal agency for purposes of National Security review (35 U.S.C. 181) and for review pursuant to the Atomic Energy Act (42 U.S.C. 218(c)).

7. A record from this system of records may be disclosed, as a routine use, to the Administrator, General Services, or his/her designee, during an inspection of records conducted by GSA as part of that agency's responsibility to recommend improvements in records management practices and programs, under authority of 44 U.S.C. 2904 and 2906. Such disclosure shall be made in accordance with the GSA regulations governing inspection of records for this purpose, and any other relevant (i.e., GSA or Commerce) directive. Such disclosure shall not be used to make determinations about individuals.

8. A record from this system of records may be disclosed, as a routine use, to the public after either publication of the application pursuant to 35 U.S.C. 122(b) or issuance of a patent pursuant to 35 U.S.C. 151. Further, a record may be disclosed, subject to the limitations of 37 CFR 1.14, as a routine use, to the public if the record was filed in an application which became abandoned or in which the proceedings were terminated and which application is referenced by either a published application, an application open to public inspections or an issued patent.

9. A record from this system of records may be disclosed, as a routine use, to a Federal, State, or local law enforcement agency, if the USPTO becomes aware of a violation or potential violation of law or regulation.

PTO/SB/66 (03-09)
Approved for use through 03/31/2012. OMB 0651-0016
U.S. Patent and Trademark Office: U.S. DEPARTMENT OF COMMERCE
Under the Paperwork Reduction Act of 1995, no persons are required to respond to a collection of information unless it displays valid OMB control number.

PETITION TO ACCEPT UNINTENTIONALLY DELAYED PAYMENT OF MAINTENANCE FEE IN AN EXPIRED PATENT (37 CFR 1.378(c))

Patent Number	Issue Date (YYYY-MM-DD)	Application Number	Filing Date (YYYY-MM-DD)	Docket Number (if applicable)
6,256,813	2001-07-10	09/425,125	1999-10-22	P001084.US.01

CAUTION: Maintenance fee (and surcharge, if any) payment must correctly identify: (1) the patent number and (2) the application number of the actual U.S. application leading to issuance of that patent to ensure the fee(s) is/are associated with the correct patent. 37 CFR 1.366(c) and (d).

SMALL ENTITY

☒ Patentee claims, or has previously claimed, small entity status. See 37 CFR 1.27.

LOSS OF ENTITLEMENT TO SMALL ENTITY STATUS

☐ Patentee is no longer entitled to small entity status. See 37 CFR 1.27(g)

NOT Small Entity			Small Entity		
	Fee	Code		Fee	Code
○	3 ½ year	(1551)	○	3 ½ year	(2551)
○	7 ½ year	(1552)	◉	7 ½ year	(2552)
○	11 ½ year	(1553)	○	11 ½ year	(2553)

SURCHARGE

The surcharge required by 37 CFR 1.20(i)(2) (Fee Code 1558) must be paid as a condition of accepting unintentionally delayed payment of the maintenance fee.

MAINTENANCE FEE (37 CFR 1.20(e)-(g))

The appropriate maintenance fee must be submitted with this petition.

STATEMENT

THE UNDERSIGNED CERTIFIES THAT THE DELAY IN PAYMENT OF THE MAINTENANCE FEE TO THIS PATENT WAS UNINTENTIONAL

PETITIONER(S) REQUEST THAT THE DELAYED PAYMENT OF THE MAINTENANCE FEE BE ACCEPTED AND THE PATENT REINSTATED

THIS PORTION MUST BE COMPLETED BY THE SIGNATORY OR SIGNATORIES

37 CFR 1.378(d) states: "Any petition under this section must be signed by an attorney or agent registered to practice before the Patent and Trademark Office, or by the patentee, the assignee, or other party in interest."

I certify, in accordance with 37 CFR 1.4(d)(4) that I am

◉ An attorney or agent registered to practice before the Patent and Trademark Office

○ A sole patentee

○ A joint patentee; I certify that I am authorized to sign this submission on behalf of all the other patentees.

○ A joint patentee; all of whom are signing this e-petition

○ The assignee of record of the entire interest

PTO/SB/66 (03-09)
Approved for use through 03/31/2012. OMB 0651-0016
U.S. Patent and Trademark Office: U.S. DEPARTMENT OF COMMERCE
Under the Paperwork Reduction Act of 1995, no persons are required to respond to a collection of information unless it displays valid OMB control number.

Patent Practitioner			
A signature of the applicant or representative is required in accordance with 37 CFR 1.33 and 10.18. Please see 37 CFR 1.4(d) for the form of the signature			
Signature	/BJH 3114/	Date (YYYY-MM-DD)	2011-02-25
Name	Brad J. Hattenbach	Registration Number	42642

This collection of information is required by 37 CFR 1.378(c). The information is required to obtain or retain a benefit by the public which is to file (and by the USPTO to process) an application. Confidentiality is governed by 35 U.S.C. 122 and 37 CFR 1.11 and 1.14. This collection is estimated to take 1 hour to complete, including gathering, preparing, and submitting the completed application form to the USPTO. Time will vary depending upon the individual case. Any comments on the amount of time you require to complete this form and/ or suggestions for reducing this burden, should be sent to the Chief Information Officer, U.S. Patent and Trademark Office, U.S. Department of Commerce, P.O. Box 1450, Alexandria, VA 22313-1450. DO NOT SEND FEES OR COMPLETED FORMS TO THIS ADDRESS. **This form can only be used when in conjunction with EFS-Web. If this form is mailed to the USPTO, it may cause delays in reinstating the patent.**

Privacy Act Statement

The Privacy Act of 1974 (P.L. 93-579) requires that you be given certain information in connection with your submission of the attached form related to a patent application or patent. Accordingly, pursuant to the requirements of the Act, please be advised that: (1) the general authority for the collection of this information is 35 U.S.C. 2(b)(2); (2) furnishing of the information solicited is voluntary; and (3) the principal purpose for which the information is used by the U.S. Patent and Trademark Office is to process and/or examine your submission related to a patent application or patent. If you do not furnish the requested information, the U.S. Patent and Trademark Office may not be able to process and/or examine your submission, which may result in termination of proceedings or abandonment of the application or expiration of the patent.

The information provided by you in this form will be subject to the following routine uses:

1. The information on this form will be treated confidentially to the extent allowed under the Freedom of Information Act (5 U.S.C. 552) and the Privacy Act (5 U.S.C. 552a). Records from this system of records may be disclosed to the Department of Justice to determine whether the Freedom of Information Act requires disclosure of these records.

2. A record from this system of records may be disclosed, as a routine use, in the course of presenting evidence to a court, magistrate, or administrative tribunal, including disclosures to opposing counsel in the course of settlement negotiations.

3. A record in this system of records may be disclosed, as a routine use, to a Member of Congress submitting a request involving an individual, to whom the record pertains, when the individual has requested assistance from the Member with respect to the subject matter of the record.

4. A record in this system of records may be disclosed, as a routine use, to a contractor of the Agency having need for the information in order to perform a contract. Recipients of information shall be required to comply with the requirements of the Privacy Act of 1974, as amended, pursuant to 5 U.S.C. 552a(m).

5. A record related to an International Application filed under the Patent Cooperation Treaty in this system of records may be disclosed, as a routine use, to the International Bureau of the World Intellectual Property Organization, pursuant to the Patent Cooperation Treaty.

6. A record in this system of records may be disclosed, as a routine use, to another federal agency for purposes of National Security review (35 U.S.C. 181) and for review pursuant to the Atomic Energy Act (42 U.S.C. 218(c)).

7. A record from this system of records may be disclosed, as a routine use, to the Administrator, General Services, or his/her designee, during an inspection of records conducted by GSA as part of that agency's responsibility to recommend improvements in records management practices and programs, under authority of 44 U.S.C. 2904 and 2906. Such disclosure shall be made in accordance with the GSA regulations governing inspection of records for this purpose, and any other relevant (i.e., GSA or Commerce) directive. Such disclosure shall not be used to make determinations about individuals.

8. A record from this system of records may be disclosed, as a routine use, to the public after either publication of the application pursuant to 35 U.S.C. 122(b) or issuance of a patent pursuant to 35 U.S.C. 151. Further, a record may be disclosed, subject to the limitations of 37 CFR 1.14, as a routine use, to the public if the record was filed in an application which became abandoned or in which the proceedings were terminated and which application is referenced by either a published application, an application open to public inspections or an issued patent.

9. A record from this system of records may be disclosed, as a routine use, to a Federal, State, or local law enforcement agency, if the USPTO becomes aware of a violation or potential violation of law or regulation.

UNITED STATES PATENT AND TRADEMARK OFFICE

Commissioner for Patents
United States Patent and Trademark Office
P.O. Box 1450
Alexandria, VA 22313-1450
www.uspto.gov

In re Patent No. 6256813
Issue Date: July 10,2001
Application No. 09425125
Filed: October 22,1999
Attorney Docket No. 38783.830002

:
:DECISION GRANTING PETITION
:UNDER 37 CFR 1.378(c)
:

This is a decision on the electronic petition, filed February 25,2011 ,under 37 CFR 1.378(c) to accept the unintentionally delayed payment of the 7.5 year maintenance fee for the above-identified patent.

The petition is **GRANTED**.

The maintenance fee is accepted, and the above-identified patent reinstated as of February 25,2011 . This decision also constitutes notice that the fee has been accepted. An electronic copy of the petition and this decision has been created as an entry in the Image File Wrapper. Nevertheless, petitioner should print and retain an independent copy.

Telephone inquiries related to this electronic decision should be directed to the Electronic Business Center at 1-866-217-9197.

UNITED STATES PATENT AND TRADEMARK OFFICE

Commissioner for Patents
United States Patent and Trademark Office
P.O. Box 1450
Alexandria, VA 22313-1450
www.uspto.gov

MAILED

APR 28 2011

OFFICE OF PETITIONS

THE JACKSON PATENT GROUP
1500 FOREST AVENUE, SUITE 212
RICHMOND, VA 23229

In re Patent No. 6,448,700 :
Issue Date: September 10, 2002 :
Application No. 09/425,410 : ON PETITION
Filed: October 25, 1999 :
Attorney Docket No.: 1301(SURA) :

This is a decision on the petition, filed March 1, 2011, under 37 CFR 1.378(c) to accept the unintentionally delayed payment of a maintenance fee for the above-identified patent.

The petition is **GRANTED**.

This patent expired on September 10, 2010 for failure to pay the second maintenance fee. Since this petition was submitted within twenty-four months after the six-month grace period provided in 37 CFR 1.362(e), the petition was timely filed under the provisions of 37 CFR 1.378(c).

The 7 ½ year maintenance fee in this case is hereby accepted and the above-identified patent is reinstated as of the mail date of this decision.

It is noted that the address given on the petition differs from the address of record. If appropriate, a change of address should be filed in accordance with MPEP 601.03. Petitioner is reminded, however, that the mere filing of a change of correspondence address does not affect fee address. Therefore, if petitioner desires to receive future correspondence regarding any Maintenance Fee Reminder which may be mailed regarding maintenance fees for the above-identified patent, an appropriate "fee address" and/or "customer number" form should be submitted to the Maintenance Fee Division. A courtesy copy of this decision is being mailed to the address given on the petition.

Telephone inquiries concerning this matter may be directed to the undersigned at (571) 272-3204.

/SDB/

Sherry D. Brinkley
Petitions Examiner
Office of Petitions

cc: AUZVILLE JACKSON, JR.
8652 RIO GRANDE ROAD
RICHMOND, VA 23229

PTO/SB/66 (03-09)
Approved for use through 03/31/2012. OMB 0651-0016
U.S. Patent and Trademark Office: U.S. DEPARTMENT OF COMMERCE
Under the Paperwork Reduction Act of 1995, no persons are required to respond to a collection of information unless it displays valid OMB control number.

PETITION TO ACCEPT UNINTENTIONALLY DELAYED PAYMENT OF MAINTENANCE FEE IN AN EXPIRED PATENT (37 CFR 1.378(c))

Patent Number	Issue Date (YYYY-MM-DD)	Application Number	Filing Date (YYYY-MM-DD)	Docket Number (if applicable)
6,337,659	2002-01-08	09/426,198	1999-10-25	P10141US

CAUTION: Maintenance fee (and surcharge, if any) payment must correctly identify: (1) the patent number and (2) the application number of the actual U.S. application leading to issuance of that patent to ensure the fee(s) is/are associated with the correct patent. 37 CFR 1.366(c) and (d).

SMALL ENTITY

☒ Patentee claims, or has previously claimed, small entity status. See 37 CFR 1.27.

LOSS OF ENTITLEMENT TO SMALL ENTITY STATUS

☐ Patentee is no longer entitled to small entity status. See 37 CFR 1.27(g)

NOT Small Entity	Fee	Code	Small Entity	Fee	Code
○	3 ½ year	(1551)	○	3 ½ year	(2551)
○	7 ½ year	(1552)	◉	7 ½ year	(2552)
○	11 ½ year	(1553)	○	11 ½ year	(2553)

SURCHARGE

The surcharge required by 37 CFR 1.20(i)(2) (Fee Code 1558) must be paid as a condition of accepting unintentionally delayed payment of the maintenance fee.

MAINTENANCE FEE (37 CFR 1.20(e)-(g))

The appropriate maintenance fee must be submitted with this petition.

STATEMENT

THE UNDERSIGNED CERTIFIES THAT THE DELAY IN PAYMENT OF THE MAINTENANCE FEE TO THIS PATENT WAS UNINTENTIONAL

PETITIONER(S) REQUEST THAT THE DELAYED PAYMENT OF THE MAINTENANCE FEE BE ACCEPTED AND THE PATENT REINSTATED

THIS PORTION MUST BE COMPLETED BY THE SIGNATORY OR SIGNATORIES

37 CFR 1.378(d) states: "Any petition under this section must be signed by an attorney or agent registered to practice before the Patent and Trademark Office, or by the patentee, the assignee, or other party in interest."

I certify, in accordance with 37 CFR 1.4(d)(4) that I am

◉ An attorney or agent registered to practice before the Patent and Trademark Office

○ A sole patentee

○ A joint patentee; I certify that I am authorized to sign this submission on behalf of all the other patentees.

○ A joint patentee; all of whom are signing this e-petition

○ The assignee of record of the entire interest

PTO/SB/66 (03-09)
Approved for use through 03/31/2012. OMB 0651-0016
U.S. Patent and Trademark Office: U.S. DEPARTMENT OF COMMERCE
Under the Paperwork Reduction Act of 1995, no persons are required to respond to a collection of information unless it displays valid OMB control number.

Patent Practitioner			
A signature of the applicant or representative is required in accordance with 37 CFR 1.33 and 10.18. Please see 37 CFR 1.4(d) for the form of the signature			
Signature	/Taeksoo Lee/	Date (YYYY-MM-DD)	2010-08-04
Name	Taeksoo Lee	Registration Number	61976

This collection of information is required by 37 CFR 1.378(c). The information is required to obtain or retain a benefit by the public which is to file (and by the USPTO to process) an application. Confidentiality is governed by 35 U.S.C. 122 and 37 CFR 1.11 and 1.14. This collection is estimated to take 1 hour to complete, including gathering, preparing, and submitting the completed application form to the USPTO. Time will vary depending upon the individual case. Any comments on the amount of time you require to complete this form and/ or suggestions for reducing this burden, should be sent to the Chief Information Officer, U.S. Patent and Trademark Office, U.S. Department of Commerce, P.O. Box 1450, Alexandria, VA 22313-1450. DO NOT SEND FEES OR COMPLETED FORMS TO THIS ADDRESS. **This form can only be used when in conjunction with EFS-Web. If this form is mailed to the USPTO, it may cause delays in reinstating the patent.**

Privacy Act Statement

The Privacy Act of 1974 (P.L. 93-579) requires that you be given certain information in connection with your submission of the attached form related to a patent application or patent. Accordingly, pursuant to the requirements of the Act, please be advised that: (1) the general authority for the collection of this information is 35 U.S.C. 2(b)(2); (2) furnishing of the information solicited is voluntary; and (3) the principal purpose for which the information is used by the U.S. Patent and Trademark Office is to process and/or examine your submission related to a patent application or patent. If you do not furnish the requested information, the U.S. Patent and Trademark Office may not be able to process and/or examine your submission, which may result in termination of proceedings or abandonment of the application or expiration of the patent.

The information provided by you in this form will be subject to the following routine uses:

1. The information on this form will be treated confidentially to the extent allowed under the Freedom of Information Act (5 U.S.C. 552) and the Privacy Act (5 U.S.C. 552a). Records from this system of records may be disclosed to the Department of Justice to determine whether the Freedom of Information Act requires disclosure of these records.

2. A record from this system of records may be disclosed, as a routine use, in the course of presenting evidence to a court, magistrate, or administrative tribunal, including disclosures to opposing counsel in the course of settlement negotiations.

3. A record in this system of records may be disclosed, as a routine use, to a Member of Congress submitting a request involving an individual, to whom the record pertains, when the individual has requested assistance from the Member with respect to the subject matter of the record.

4. A record in this system of records may be disclosed, as a routine use, to a contractor of the Agency having need for the information in order to perform a contract. Recipients of information shall be required to comply with the requirements of the Privacy Act of 1974, as amended, pursuant to 5 U.S.C. 552a(m).

5. A record related to an International Application filed under the Patent Cooperation Treaty in this system of records may be disclosed, as a routine use, to the International Bureau of the World Intellectual Property Organization, pursuant to the Patent Cooperation Treaty.

6. A record in this system of records may be disclosed, as a routine use, to another federal agency for purposes of National Security review (35 U.S.C. 181) and for review pursuant to the Atomic Energy Act (42 U.S.C. 218(c)).

7. A record from this system of records may be disclosed, as a routine use, to the Administrator, General Services, or his/her designee, during an inspection of records conducted by GSA as part of that agency's responsibility to recommend improvements in records management practices and programs, under authority of 44 U.S.C. 2904 and 2906. Such disclosure shall be made in accordance with the GSA regulations governing inspection of records for this purpose, and any other relevant (i.e., GSA or Commerce) directive. Such disclosure shall not be used to make determinations about individuals.

8. A record from this system of records may be disclosed, as a routine use, to the public after either publication of the application pursuant to 35 U.S.C. 122(b) or issuance of a patent pursuant to 35 U.S.C. 151. Further, a record may be disclosed, subject to the limitations of 37 CFR 1.14, as a routine use, to the public if the record was filed in an application which became abandoned or in which the proceedings were terminated and which application is referenced by either a published application, an application open to public inspections or an issued patent.

9. A record from this system of records may be disclosed, as a routine use, to a Federal, State, or local law enforcement agency, if the USPTO becomes aware of a violation or potential violation of law or regulation.

UNITED STATES PATENT AND TRADEMARK OFFICE

Commissioner for Patents
United States Patent and Trademark Office
P.O. Box 1450
Alexandria, VA 22313-1450
www.uspto.gov

In re Patent No. 6337659
Issue Date: January 8,2002
Application No. 09426198
Filed: October 25,1999
Attorney Docket No. 18620

:
:DECISION GRANTING PETITION
:UNDER 37 CFR 1.378(c)
:

This is a decision on the electronic petition, filed August 4,2010 ,under 37 CFR 1.378(c) to accept the unintentionally delayed payment of the 7.5 year maintenance fee for the above-identified patent.

The petition is **GRANTED**.

The maintenance fee is accepted, and the above-identified patent reinstated as of August 4,2010 .
This decision also constitutes notice that the fee has been accepted. An electronic copy of the petition and this decision has been created as an entry in the Image File Wrapper. Nevertheless, petitioner should print and retain an independent copy.

Telephone inquiries related to this electronic decision should be directed to the Electronic Business Center at 1-866-217-9197.

PTO/SB/66 (03-09)
Approved for use through 03/31/2012. OMB 0651-0016
U.S. Patent and Trademark Office: U.S. DEPARTMENT OF COMMERCE
Under the Paperwork Reduction Act of 1995, no persons are required to respond to a collection of information unless it displays valid OMB control number.

PETITION TO ACCEPT UNINTENTIONALLY DELAYED PAYMENT OF MAINTENANCE FEE IN AN EXPIRED PATENT (37 CFR 1.378(c))

Patent Number	Issue Date (YYYY-MM-DD)	Application Number	Filing Date (YYYY-MM-DD)	Docket Number (if applicable)
6,250,498	2001-06-26	09/426,602	1999-10-26	

CAUTION: Maintenance fee (and surcharge, if any) payment must correctly identify: (1) the patent number and (2) the application number of the actual U.S. application leading to issuance of that patent to ensure the fee(s) is/are associated with the correct patent. 37 CFR 1.366(c) and (d).

SMALL ENTITY

☒ Patentee claims, or has previously claimed, small entity status. See 37 CFR 1.27.

LOSS OF ENTITLEMENT TO SMALL ENTITY STATUS

☐ Patentee is no longer entitled to small entity status. See 37 CFR 1.27(g)

NOT Small Entity	Fee	Code	Small Entity	Fee	Code
○	3 ½ year	(1551)	○	3 ½ year	(2551)
○	7 ½ year	(1552)	◉	7 ½ year	(2552)
○	11 ½ year	(1553)	○	11 ½ year	(2553)

SURCHARGE

The surcharge required by 37 CFR 1.20(i)(2) (Fee Code 1558) must be paid as a condition of accepting unintentionally delayed payment of the maintenance fee.

MAINTENANCE FEE (37 CFR 1.20(e)-(g))

The appropriate maintenance fee must be submitted with this petition.

STATEMENT

THE UNDERSIGNED CERTIFIES THAT THE DELAY IN PAYMENT OF THE MAINTENANCE FEE TO THIS PATENT WAS UNINTENTIONAL

PETITIONER(S) REQUEST THAT THE DELAYED PAYMENT OF THE MAINTENANCE FEE BE ACCEPTED AND THE PATENT REINSTATED

THIS PORTION MUST BE COMPLETED BY THE SIGNATORY OR SIGNATORIES

37 CFR 1.378(d) states: "Any petition under this section must be signed by an attorney or agent registered to practice before the Patent and Trademark Office, or by the patentee, the assignee, or other party in interest."

I certify, in accordance with 37 CFR 1.4(d)(4) that I am

◉ An attorney or agent registered to practice before the Patent and Trademark Office

○ A sole patentee

○ A joint patentee; I certify that I am authorized to sign this submission on behalf of all the other patentees.

○ A joint patentee; all of whom are signing this e-petition

○ The assignee of record of the entire interest

PTO/SB/66 (03-09)
Approved for use through 03/31/2012. OMB 0651-0016
U.S. Patent and Trademark Office: U.S. DEPARTMENT OF COMMERCE
Under the Paperwork Reduction Act of 1995, no persons are required to respond to a collection of information unless it displays valid OMB control number.

Patent Practitioner			
A signature of the applicant or representative is required in accordance with 37 CFR 1.33 and 10.18. Please see 37 CFR 1.4(d) for the form of the signature			
Signature	/Edwin D. Schindler/	Date (YYYY-MM-DD)	2011-06-21
Name	Edwin D. Schindler	Registration Number	31459

This collection of information is required by 37 CFR 1.378(c). The information is required to obtain or retain a benefit by the public which is to file (and by the USPTO to process) an application. Confidentiality is governed by 35 U.S.C. 122 and 37 CFR 1.11 and 1.14. This collection is estimated to take 1 hour to complete, including gathering, preparing, and submitting the completed application form to the USPTO. Time will vary depending upon the individual case. Any comments on the amount of time you require to complete this form and/ or suggestions for reducing this burden, should be sent to the Chief Information Officer, U.S. Patent and Trademark Office, U.S. Department of Commerce, P.O. Box 1450, Alexandria, VA 22313-1450. DO NOT SEND FEES OR COMPLETED FORMS TO THIS ADDRESS. **This form can only be used when in conjunction with EFS-Web. If this form is mailed to the USPTO, it may cause delays in reinstating the patent.**

Privacy Act Statement

The Privacy Act of 1974 (P.L. 93-579) requires that you be given certain information in connection with your submission of the attached form related to a patent application or patent. Accordingly, pursuant to the requirements of the Act, please be advised that: (1) the general authority for the collection of this information is 35 U.S.C. 2(b)(2); (2) furnishing of the information solicited is voluntary; and (3) the principal purpose for which the information is used by the U.S. Patent and Trademark Office is to process and/or examine your submission related to a patent application or patent. If you do not furnish the requested information, the U.S. Patent and Trademark Office may not be able to process and/or examine your submission, which may result in termination of proceedings or abandonment of the application or expiration of the patent.

The information provided by you in this form will be subject to the following routine uses:

1. The information on this form will be treated confidentially to the extent allowed under the Freedom of Information Act (5 U.S.C. 552) and the Privacy Act (5 U.S.C. 552a). Records from this system of records may be disclosed to the Department of Justice to determine whether the Freedom of Information Act requires disclosure of these records.

2. A record from this system of records may be disclosed, as a routine use, in the course of presenting evidence to a court, magistrate, or administrative tribunal, including disclosures to opposing counsel in the course of settlement negotiations.

3. A record in this system of records may be disclosed, as a routine use, to a Member of Congress submitting a request involving an individual, to whom the record pertains, when the individual has requested assistance from the Member with respect to the subject matter of the record.

4. A record in this system of records may be disclosed, as a routine use, to a contractor of the Agency having need for the information in order to perform a contract. Recipients of information shall be required to comply with the requirements of the Privacy Act of 1974, as amended, pursuant to 5 U.S.C. 552a(m).

5. A record related to an International Application filed under the Patent Cooperation Treaty in this system of records may be disclosed, as a routine use, to the International Bureau of the World Intellectual Property Organization, pursuant to the Patent Cooperation Treaty.

6. A record in this system of records may be disclosed, as a routine use, to another federal agency for purposes of National Security review (35 U.S.C. 181) and for review pursuant to the Atomic Energy Act (42 U.S.C. 218(c)).

7. A record from this system of records may be disclosed, as a routine use, to the Administrator, General Services, or his/her designee, during an inspection of records conducted by GSA as part of that agency's responsibility to recommend improvements in records management practices and programs, under authority of 44 U.S.C. 2904 and 2906. Such disclosure shall be made in accordance with the GSA regulations governing inspection of records for this purpose, and any other relevant (i.e., GSA or Commerce) directive. Such disclosure shall not be used to make determinations about individuals.

8. A record from this system of records may be disclosed, as a routine use, to the public after either publication of the application pursuant to 35 U.S.C. 122(b) or issuance of a patent pursuant to 35 U.S.C. 151. Further, a record may be disclosed, subject to the limitations of 37 CFR 1.14, as a routine use, to the public if the record was filed in an application which became abandoned or in which the proceedings were terminated and which application is referenced by either a published application, an application open to public inspections or an issued patent.

9. A record from this system of records may be disclosed, as a routine use, to a Federal, State, or local law enforcement agency, if the USPTO becomes aware of a violation or potential violation of law or regulation.

UNITED STATES PATENT AND TRADEMARK OFFICE

Commissioner for Patents
United States Patent and Trademark Office
P.O. Box 1450
Alexandria, VA 22313-1450
www.uspto.gov

In re Patent No. 6250498
Issue Date: June 26,2001
Application No. 09426602
Filed: October 26,1999
Attorney Docket No.

:
:DECISION GRANTING PETITION
:UNDER 37 CFR 1.378(c)
:

This is a decision on the electronic petition, filed June 21,2011 ,under 37 CFR 1.378(c) to accept the unintentionally delayed payment of the 7.5 year maintenance fee for the above-identified patent.

The petition is **GRANTED**.

The maintenance fee is accepted, and the above-identified patent reinstated as of June 21,2011 .
This decision also constitutes notice that the fee has been accepted. An electronic copy of the petition and this decision has been created as an entry in the Image File Wrapper. Nevertheless, petitioner should print and retain an independent copy.

Telephone inquiries related to this electronic decision should be directed to the Electronic Business Center at 1-866-217-9197.

UNITED STATES PATENT AND TRADEMARK OFFICE

Commissioner for Patents
United States Patent and Trademark Office
P.O. Box 1450
Alexandria, VA 22313-1450
www.uspto.gov

MICHAEL E. ZALL
TWO YORKSHIRE DRIVE
SUFFERN NY 10901

MAILED

SEP 26 2011

OFFICE OF PETITIONS

In re Patent No.6,297,420 :
Issue Date: 2 October, 2001 :
Application No. 09/430,271 : DECISION ON PETITION
Filed: 29 October, 1999 :
Attorney Docket No. HEINCKE3.0-001 :

This is a decision on the petition filed on 29 August, 2011, and properly treated as a petition under 37 C.F.R. §1.378(b)[1] requesting acceptance of payment of a maintenance fee for the above-referenced patent as having been delayed due to unavoidable delay.

The petition pursuant to 37 C.F.R. §1.378(b) is **DISMISSED**.

If reconsideration of this decision is desired, a petition for reconsideration under 37 C.F.R. §1.378(e) must be filed within TWO (2) MONTHS from the mail date of this decision.

No extension of this 2-month time limit can be granted under 37 C.F.R. §1.136(a) or (b).

A petition for reconsideration **must** be accompanied by the petition fee of $400.00 as set forth in 37 C.F.R. §1.17(f).

The petition for reconsideration **shall** include an exhaustive attempt to provide the lacking item(s) noted below, since, after a decision on the petition for reconsideration, the Director will undertake no further reconsideration or review of the matter.

This is **not** a final agency action within the meaning of 5 U.S.C.§704.

[1] A grantable petition to accept a delayed maintenance fee payment under 37 C.F.R. §1.378(b) must be include
(1) the required maintenance fee set forth in §1.20(e) through (g);
(2) the surcharge set forth in §1.20(l)(1); and
(3) a showing that the delay was unavoidable since reasonable care was taken to ensure that the maintenance fee would be paid timely and that the petition was filed promptly after the patentee was notified of, or otherwise became aware of, the expiration of the patent. The showing must enumerate the steps taken to ensure timely payment of the maintenance fee, the date and the manner in which patentee became aware of the expiration of the patent, and the steps taken to file the petition promptly.

Patent No.6,297,420
Application No. 09/430,271

A petition to accept the delayed payment of a maintenance fee under 35 USC §41(c) and 37 C.F.R. §1.378(b) must be accompanied by:

> *(1) an adequate showing that the delay was unavoidable, since reasonable care was taken to ensure that the maintenance fee would be paid timely;*
>
> *(2) payment of the appropriate maintenance fee, unless previously submitted; and*
>
> *(3) payment of the surcharge set forth in 37 C.F.R. §1.20(i)(1).*

The instant petition fails to satisfy requirement (1), listed/described above.

BACKGROUND

Patent No. 6,297,420 (the '420 patent) issued on 2 October, 2001. The first maintenance fee could have been paid during the period from 2 October, 2004, through midnight 2 April, 2005, or, with a surcharge, during the period from 3 April, 2005, through midnight 2 October, 2005. Accordingly, the patent expired after midnight 2 October, 2005, for failure to pay timely the first maintenance fee. (It is noted for the record that the second maintenance fee also was not paid on or before the 7.5-year anniversary of the issue date of the patent.)

The instant petition (with fee) pursuant to 37 C.F.R. §1.378(b) was filed on 29 August, 2011.

STATUTE AND REGULATION

The grant of authority at 35 U.S.C. §41(c)(1) provides that:

> The Director may accept the payment of any maintenance fee required by subsection (b) of this section...after the six-month grace period if the delay is shown to the satisfaction of the Director to have been unavoidable.

The regulations 37 C.F.R. §1.378(b)(3) thus set forth that any petition to accept delayed payment of a maintenance fee must include:

> A showing that the delay was unavoidable since reasonable care was taken to ensure that the maintenance fee would be paid timely and that the petition was filed promptly after the patentee was notified of, or otherwise became aware of, the expiration of the patent. The showing must enumerate the steps taken to ensure timely payment of the maintenance fee, the date, and the manner in which patentee became aware of the expiration of the patent, and the steps taken to file the petition promptly. (Emphasis supplied.)

Out of an abundance of caution, Petitioners always are reminded that those registered to practice and all others who make representations before the Office **must** inquire into the underlying facts of representations made to the Office and support averments with the appropriate documentation–since all owe to the Office the continuing duty of candor and duty to disclose.[2]

OPINION

The Director may accept late payment of the maintenance fee under 35 U.S.C. §41(c) and 37 C.F.R. §1.378(b) if the delay is shown to the satisfaction of the Director to have been "unavoidable."[3]

A late maintenance fee is considered under the same standard as that for reviving an abandoned application under 35 U.S.C. §133 because 35 U.S.C. §41(c)(1) uses the identical language, i.e., "unavoidable" delay.[4] Decisions reviving abandoned applications have adopted the reasonably prudent person standard in determining if the delay was unavoidable.[5] In addition, decisions on revival are made on a "case-by-case basis, taking all the facts and circumstances into account."[6] Finally, a petition to revive an application or reinstate a patent as abandoned or expired due to unavoidable delay cannot be granted where a Petitioner has failed to meet his or her burden of establishing the cause of the unavoidable delay.[7]

Petitioner's Contentions as to Unavoidable Delay

Petitioner Michael E. Zall (Reg. No. 27,023) sought relief on behalf of patentees/assignees pursuant to the regulations at 37 C.F.R. §1.378, averring unavoidable delay.

Patent No. 6,297,420 (the '420 patent) issued on 2 October, 2001. The first maintenance fee could have been paid during the period from 2 October, 2004, through midnight 2 April, 2005, or, with a surcharge, during the period from 3 April, 2005, through midnight 2 October, 2005. Accordingly, the patent expired after midnight 2 October, 2005, for failure to pay timely the first maintenance fee. (It is noted for the record that the second maintenance fee also was not paid on or before the 7.5-year anniversary of the issue date of the patent.)

---

[2] See supplement of 17 June, 1999. The Patent and Trademark Office is relying on Petitioner's duty of candor and good faith and accepting a statement made by Petitioner. See Changes to Patent Practice and Procedure, 62 Fed. Reg. at 53160 and 53178, 1203 Off. Gaz. Pat. Office at 88 and 103 (responses to comments 64 and 109)(Petitioner obligated under 37 C.F.R. §10.18 to inquire into the underlying facts and circumstances when providing statements to the Patent and Trademark Office).

[3] 35 U.S.C. §41(c)(1).

[4] *Ray v. Lehman*, 55 F.3d 606, 608-09, 34 USPQ2d 1786, 1787 (Fed. Cir. 1995)(quoting In re Patent No. 4,409,763, 7 USPQ2d 1798, 1800 (Comm'r Pat. 1988)).

[5] *Ex parte Pratt*, 1887 Dec. Comm'r Pat. 31, 32-33 (Comm'r Pat. 1887) (the term "unavoidable" "is applicable to ordinary human affairs, and requires no more or greater care or diligence than is generally used and observed by prudent and careful man in relation to their most important business"); *In re Mattullath*, 38 App. D.C. 497, 514-15 (D.C. Cir. 1912); *Ex parte Henrich*, 1913 Dec. Comm'r Pat. 139, 141 (Comm'r Pat. 1913).

[6] *Smith v. Mossinghoff*, 671 F.2d 533, 538, 213 USPQ 977, 982 (D.C. Cir. 1982).

[7] *Haines v. Quigg*, 673 F. Supp. 314, 5 USPQ2d 1130 (N.D. Ind. 1987).

The sum and substance of the petition is set forth in the petition of Mr. Zall/Petitioner and in the statement of Arno J. Heincke (Mr. Heincke)—inventor (there is no indication of record of assignment)--who contend that after issue of the '420 patent in October 2001:

- In October 2002, Mr. Heincke sold/moved from his former residence in Beacon, New York (the Beacon home) and moved to White Lake, New York (the White Lake home), without notifying his former Counsel Karl Milde (Mr. Milde)—who prosecuted the application to the issue of the '420 patent—of Milde Hoffberg & Macklin (the MHM Firm)—though Mr. Heincke states that "he exchanged telephone numbers with" and "became good friends with" the new owners of the Beacon home;[8]

- Mr. Heincke states that the MHM Firm has since "dissolved"—but provides no date for this event; [9]

- Mr. Heincke states that he requested that the U.S. Postal Service (USPS) forward his mail from the Beacon home to the White Lake home[10]—though there is neither a date for this event nor a copy of a mail-forwarding order averred to have been filed by Mr. Heincke with the USPS, and in no case is there a showing that Mr. Heincke provided such information to Mr. Milde or the Office *via* a Notice of Change of Address (or Notice of Fee Address);

- In February 2005, Mr. Milde mailed to Mr. Heincke a reminder (the February 2005 reminder) that the first maintenance fee was due for the '420 patent—Mr. Heincke did not receive and/or does not recall receiving the February 2005 reminder, though he avers that he now knows that it was returned to Mr. Milde and/or the MHM Firm;[11]

- Mr. Heincke never instructed Mr. Milde not to pay the first maintenance fee;[12]

- In spring 2010, Mr. Heincke "obtained a potential purchaser or licensee" of the '420 patent, and was only upon that person or entity's review of the matter that they learned and revealed to Mr. Heincke that the '420 patent expired due to non-payment of maintenance fees;[13]

- In October 2010, Mr. Heincke originally sought the assistance of an attorney by the name of Michael Hatchett to learn the state of the '420 patent—at which time the expiration was confirmed and he found that he could not afford Mr. Hatchett's fees and could not confirm that Mr. Hatchett was registered to practice before the Office; [14], [15]

---

[8] Petition of 29 August, 2011, at page 2-3.
[9] Petition of 29 August, 2011, at page 3.
[10] Petition of 29 August, 2011, at page 3.
[11] Petition of 29 August, 2011, at page 2-3, Exhibit B, C, D.
[12] Petition of 29 August, 2011, at page 3.
[13] Petition of 29 August, 2011, at page 3.
[14] Petition of 29 August, 2011, at page 3.
[15] A review of Office records did not reveal a registered practitioner by the name of Michael Hatchett.

- Along the way a series of adverse events occurred:

  —the death of a nephew in 1999;[16]

  —the 7 December, 2004, death of Mr. Heincke's son;[17]

  —the severe downward physical and emotional turn of Mr. Heincke's wife following several events including but not limited to the death of his son—and Mr. Heincke's attempt to attend to her and her condition;[18]

  —the death of a niece in a car accident in 3 June, 2006;[19]

  —the severe injury of a family pet that then required extensive, expensive care;[20]

  —the move to Florida in October 2006 an attempt to be near and in support of their granddaughter—daughter of his deceased son;[21]

  —the economic recession there and Mr. Heincke's subsequent filing for protection of the Bankruptcy Court in March 2011—concluded in June 2011;[22]

- Mr. Heincke now has investors to support the reinstatement of the patent, and has filed the instant petition in that effort.[23]

Thus, the matter was not otherwise addressed from before expiration of the patent until the Petitioner's involvement, which culminated in the filing of the instant petition.

There is no or at least insufficient showing of record as to the docketing/calendaring of maintenance fees for the instant matter—or specifically in whom such responsibility for docketing lay, and or who performed the administrative task of docketing the maintenance fee schedule in this matter, and whether they did so erroneously. Thus, there is no showing of a failure that was systemic—such as that which occurs when a computer or computer program fails.

Possibly the error was of another form: plain human error, which is a delay that is not unavoidable but unintentional—however such a consideration is not before the Office.

---

[16] Petition of 29 August, 2011, at page 4.
[17] Petition of 29 August, 2011, at page 4, Exhibit E.
[18] Petition of 29 August, 2011, at page 4.
[19] Petition of 29 August, 2011, at page 4, Exhibit F.
[20] Petition of 29 August, 2011, at page 4.
[21] Petition of 29 August, 2011, at page 4.
[22] Petition of 29 August, 2011, at page 4, Exhibit G.
[23] Petition of 29 August, 2011, at page 4-5.

In any case, such facts as have been recited do not suggest diligence—at least a level of diligence as required herein—on the part of those who were supposed to attend to this matter.

The provisions of 35 U.S.C. §41(c)(1) do not require an affirmative finding that the delay was avoidable, but only an explanation as to why the Petitioner has failed to carry his or her burden to establish that the delay was unavoidable.[24] The provisions of 35 U.S.C. §133 do not require the Commissioner to affirmatively find that the delay was avoidable, but only to explain why the applicant's petition was unavailing.

Petitioner is reminded that it is the patentee's/assignee's burden under the statutes and regulations to make a showing to the satisfaction of the Director that the delay in payment of a maintenance fee is unavoidable.[25]

This the Petitioner and/ or patentee has/have not done.

At bottom, the question is one of diligence.[26]

Because 35 U.S.C. § 41(b) requires the payment of fees at specified intervals to maintain a patent in force, rather than some response to a specific action by the Office under 35 USC § 133, a reasonably prudent person in the exercise of due care and diligence would have taken steps to ensure the timely payment of such maintenance fees.[27] That is, an adequate showing that the delay in payment of the maintenance fee at issue was "unavoidable" within the meaning of 35 U.S.C. § 41(c) and 37 C.F.R. §1.378(b)(3) requires a showing of the steps taken by the responsible party to ensure the timely payment of the third/last maintenance fee for this patent.[28] There are three periods to be considered during the evaluation of a petition under 37 C.F.R. §1.378(b):

(1) The delay in reply that originally resulted in expiration;

(2) The delay in filing an initial petition pursuant to §1.378(b) to reinstate the patent; and

(3) The delay in filing a grantable petition pursuant to §1.378(b) to reinstate the patent.[29]

At the outset and as of this writing, the showing is not persuasive with regards to the nature of the delay in reply that originally resulted in expiration or as to the filing of the initial petition (Items 1 and 2), which are the periods pertinent at this time.

---

[24] *See Commissariat A. L'Energie Atomique v. Watson*, 274 F.2d 594, 597, 124 USPQ 126, 128 (D.C. Cir. 1960).

[25] *See Rydeen v. Quigg*, 748 F. Supp. 900, 16 USPQ2d 1876 (D.D.C. 1990), aff'd 937 F.2d 623 (Fed. Cir. 1991)(table), *cert. denied*, 502 U.S. 1075 (1992); *Ray v. Lehman, supra.*

[26] *See: Changes to Patent Practice and Procedure; Final Rule Notice*, 62 *Fed. Reg.* at 53158-59 (October 10, 1997), 1203 *Off. Gaz. Pat. Office* at 86-87 (October 21, 1997). *See also: Ray v. Lehman, supra.*

[27] *Ray*, 55 F.3d at 609, 34 USPQ2d at 1788.

[28] *Id.*

[29] *See* Changes to Patent Practice and Procedure; Final Rule Notice, 62 Fed. Reg. 53131 at 53158 (October 10, 1997).

Petitioner must provide documentary foundations in support of a showing of unavoidable delay.

Thus, at this writing the statements presented in/with the petition fail to satisfy the showing required to establish unavoidable delay within the meaning of 37 C.F.R. §1.378(b).

A showing of diligence in matters before the Office is essential to support a finding of unavoidable delay herein.[30] There is no "sliding scale" based upon the priority given to this maintaining this patent in force, or more diligently seeking reinstatement, *vis-a-vis* other matters by Petitioner. The issue is solely whether the maintenance, or reinstatement, of the patent at issue was actually conducted with the care or diligence that is generally used and observed by prudent and careful persons in relation to their most important business.

At this writing the record fails to adequately evidence the exercise of due care and diligence observed by prudent and careful persons, in relation to their most important business, which is necessary to establish unavoidable delay.[31]

The record at this writing does not provide a clear showing that reasonable steps were taken to ensure timely payment of the maintenance fee. In fact, the record indicates that no steps were taken by Patentee(s) and/or Assignee to ensure timely payment of the maintenance fee.

The provisions of 37 C.F.R. §1.378(b) preclude acceptance of the delayed payment of the maintenance fee due to unavoidable delay. The regulations at 37 C.F.R. §1.378(b)(3) state that any petition to accept delayed payment of a maintenance fee must include:

> A showing that the delay was unavoidable since reasonable care was taken to ensure that the maintenance fee would be paid timely and that the petition was filed promptly after the patentee was notified of, or otherwise became aware of, the expiration of the patent. The showing must enumerate the steps taken to ensure timely payment of the maintenance fee, the date, and the manner in which patentee became aware of the expiration of the patent, and the steps taken to file the petition promptly.

In any future filing, this showing should include, but is not limited to, docket records, tickler reports, and file jacket entries for this application, and documents regarding the alleged cause of the delay and copies of any documents referred to in Petitioner's statement as to the cause of the unavoidable delay are required. All the causes which contributed to the failure to timely pay the maintenance fee must be presented and supported with appropriate evidence.[32] (In general, a

---

[30] *See Futures Technology, Ltd. v. Quigg*, 684 F. Supp. 430, 431, 7 USPQ2d 1588 (E.D. Va. 1988)(applicant's diligent inquiry into the status of the application is required to show unavoidable delay); *Douglas v. Manbeck*, 21 USPQ2d 1697, 1699-1700 (E.D. Pa. 1991), *aff'd*, 975 F.2d 869, 24 USPQ2d 1318 (Fed. Cir. 1992) (even representation by counsel does not relieve the applicant from his obligation to exercise diligence before the USPTO; applicant's lack of diligence extending two and one half years overcame and superseded any omissions by his counsel).

[31] *Pratt, supra.*

[32] The showing must also enumerate the date and the manner in which patentee became aware of the expiration of the patent, and the steps taken to file the petition promptly. Statements from all persons who contributed to the delay are also required.

Petitioner should identify the party(ies) responsible for making the payment: A showing must be made (with supporting documents) outlining the efforts made to ensure timely payment of the maintenance fee--including scheduling and calendaring information, appointment of an individual with the authority and responsibility to pay the fee, and detailing of the causes for a failure in that process.)

Thus, as of this writing, the Office is unable to grant the relief sought.

In summary, the showing of record has been considered, but does not rise to the level of unavoidable delay. Rather, the showing of record is of possible a lack of diligence. (*See*: http://www.uspto.gov/web/offices/pac/mpep/documents/2500_2590.htm#sect2590)

CONCLUSION

For the reasons stated above, the delay in this case cannot be regarded as unavoidable within the meaning of 35 U.S.C. §41(c)(1) and 37 C.F.R. §1.378(b).

Accordingly, the petition under 37 C.F.R. §1.378(b) is **dismissed**.

Further correspondence with respect to this matter should be addressed as follows:

By Mail:
Mail Stop PETITION
Commissioner for Patents
P. O. Box 1450
Alexandria, VA 22313-1450

By hand:
U. S. Patent and Trademark Office
Customer Service Window, Mail Stop Petitions
Randolph Building
401 Dulany Street
Alexandria, VA 22314

By facsimile:
(571) 273-8300
Attn: Office of Petitions

Telephone inquiries regarding this decision may be directed to the undersigned at (571) 272-3214—it is noted, however, that all practice before the Office is in writing (see: 37 C.F.R. §1.2[33]) and the proper authority for action on any matter in this regard are the statutes (35 U.S.C.), regulations (37 C.F.R.) and the commentary on policy (MPEP). Therefore, no telephone discussion may be controlling or considered authority for Petitioner's action(s).

/John J. Gillon, Jr./
John J. Gillon, Jr.
Senior Attorney
Office of Petitions

[33] The regulations at 37 C.F.R. §1.2 provide:

§1.2 Business to be transacted in writing.

All business with the Patent and Trademark Office should be transacted in writing. The personal attendance of Petitioners or their attorneys or agents at the Patent and Trademark Office is unnecessary. The action of the Patent and Trademark Office will be based exclusively on the written record in the Office. No attention will be paid to any alleged oral promise, stipulation, or understanding in relation to which there is disagreement or doubt.

UNITED STATES PATENT AND TRADEMARK OFFICE

Commissioner for Patents
United States Patent and Trademark Office
P.O. Box 1450
Alexandria, VA 22313-1450
www.uspto.gov

MICHAEL E. ZALL
TWO YORKSHIRE DRIVE
SUFFERN NY 10901

MAILED

JAN 17 2012

OFFICE OF PETITIONS

In re Patent No.6,297,420 :
Issue Date: 2 October, 2001 :
Application No. 09/430,271 : DECISION ON PETITION
Filed: 29 October, 1999 :
Attorney Docket No. HEINCKE3.0-001 :

This is a decision on the paper filed on 29 November, 2011, as a petition/request pursuant to the regulations at 37 C.F.R. §1.378(b).[1]

The matter pursuant to 37 C.F.R. §1.378(b) is **DISMISSED** and the fee is refunded as requested.

BACKGROUND

Patent No. 6,297,420 (the '420 patent) issued on 2 October, 2001.

The first maintenance fee could have been paid during the period from 2 October, 2004, through midnight 2 April, 2005, or, with a surcharge, during the period from 3 April, 2005, through midnight 2 October, 2005.

Accordingly, the patent expired after midnight 2 October, 2005, for failure to pay timely the first maintenance fee. (It is noted for the record that the second maintenance fee also was not paid on or before the 7.5-year anniversary of the issue date of the patent.)

The petition (with fee) pursuant to 37 C.F.R. §1.378(b) was filed on 29 August, 2011, and dismissed on 26 September 2011.

---

[1] A grantable petition to accept a delayed maintenance fee payment under 37 C.F.R. §1.378(b) must be include
(1) the required maintenance fee set forth in §1.20(e) through (g);
(2) the surcharge set forth in §1.20(I)(1); and
(3) a showing that the delay was unavoidable since reasonable care was taken to ensure that the maintenance fee would be paid timely and that the petition was filed promptly after the patentee was notified of, or otherwise became aware of, the expiration of the patent. The showing must enumerate the steps taken to ensure timely payment of the maintenance fee, the date and the manner in which patentee became aware of the expiration of the patent, and the steps taken to file the petition promptly.

Patent No.6,297,420
Application No. 09/430,271

On 29 November, 2011, Petitioner submitted his paper and request.

CONCLUSION

For the reasons stated above on , the delay in this case cannot be regarded as unavoidable within the meaning of 35 U.S.C. §41(c)(1) and 37 C.F.R. §1.378(b).

Accordingly, the petition under 37 C.F.R. §1.378(b) is **dismissed** and fees refunded as requested.

The instant file is released to IFW Files Repository.

Telephone inquiries regarding this decision may be directed to the undersigned at (571) 272-3214—it is noted, however, that all practice before the Office is in writing (see: 37 C.F.R. §1.2[2]) and the proper authority for action on any matter in this regard are the statutes (35 U.S.C.), regulations (37 C.F.R.) and the commentary on policy (MPEP). Therefore, no telephone discussion may be controlling or considered authority for Petitioner's action(s).

/John J. Gillon, Jr./
John J. Gillon, Jr.
Senior Attorney
Office of Petitions

[2] The regulations at 37 C.F.R. §1.2 provide:
§1.2 Business to be transacted in writing.
All business with the Patent and Trademark Office should be transacted in writing. The personal attendance of Petitioners or their attorneys or agents at the Patent and Trademark Office is unnecessary. The action of the Patent and Trademark Office will be based exclusively on the written record in the Office. No attention will be paid to any alleged oral promise, stipulation, or understanding in relation to which there is disagreement or doubt.

UNITED STATES PATENT AND TRADEMARK OFFICE

Commissioner for Patents
United States Patent and Trademark Office
P.O. Box 1450

MAILED

MAR 26 2012

OFFICE OF PETITIONS

BORSON LAW GROUP, PC
1078 CAROL LANE, #200
LAFAYETTE CA 94549

In re Patent No. 6,541,008 :
Issue Date: April 1, 2003 : ON PETITION
Application No. 09/431,888 :
Filed: November 2, 1999 :

This is a decision on the petition under 37 CFR 1.378(c), filed October 24, 2011, to accept the unintentionally delayed payment of a maintenance fee for the above-identified application.

The petition is **DISMISSED**.

Any petition for reconsideration of this decision must be accompanied by the petition fee of $400 as set forth in 37 CFR 1.17(f). The petition for reconsideration must include the lacking item(s) noted below, since, after a decision on the petition for reconsideration, no further reconsideration or review of the matter will be undertaken by the Director.

The patent expired on April 2, 2011 for failure to pay the seven and one half year maintenance fee. Since this petition was submitted within twenty-four months after the six-month grace period provide in 37 CFR 1.362(e), the petition was timely filed under the provisions of 37 CFR 1.378(c).

When an assignee first seeks to take action in a matter before the Office with respect to a patent application, patent, or reexamination proceeding, the assignee must establish its ownership of the property to the satisfaction of the Director. 37 CFR 3.73(b). The assignee's ownership may be established under 37 CFR 3.73(b) by submitting to the Office, in the Office file related to the matter in which action is sought to be taken:

(A) documentary evidence of a chain of title from the original owner to the assignee (e.g., copy of an executed assignment submitted for recording) and a statement affirming that the documentary evidence of the chain of title from the original owner to the assignee was, or concurrently is, submitted for recordation pursuant to 37CFR 3.11; or

(B) a statement specifying, by reel and frame number, where such evidence is recorded in the Office. Documents submitted to establish ownership are required to be recorded, or

submitted for recordation pursuant to 37 CFR 3.11, as a condition to permitting the assignee to take action in a matter pending before the Office.

A copy of the form PTO/SB/96 for providing the statement required under 37 CFR 3.73(b) is attached.

If this petition is not renewed or if renewed and not granted, then petitioner may request a refund of the maintenance fee and surcharge fees paid. The fee for requesting reconsideration is not refundable.

It is not apparent whether the person signing the statement of unintentional delay was in a position to have firsthand or direct knowledge of the facts and circumstances of the delay at issue. Nevertheless, such statement is being treated as having been made as the result of a reasonable inquiry into the facts and circumstances of such delay. In the event that such an inquiry has not been made, petitioner must make such an inquiry. In the such inquiry results in the discovery that they delay in paying the maintenance fee under 37 CFR 1.378(c) was intentional, petitioner must notify the Office.

Petitioner has appointed a representative to conduct all business before the Patent and Trademark Office (Office). The Office will not engage in dual correspondence with petitioner and petitioner's representative. Accordingly, petitioner must conduct all future correspondence with this Office through the representative of record. If petitioner no longer wishes to be represented by the representative of record, then a revocation of the power of attorney or authorization of agent must be submitted. A correspondence address must be included on the correspondence instructing the Office where all future communications should be mailed.

Further correspondence with respect to this matter should be addressed as follows:

By Mail:
Mail Stop PETITION
Commissioner for Patents
P. O. Box 1450
Alexandria, VA 22313-1450

By hand:
U. S. Patent and Trademark Office
Customer Service Window, Mail Stop Petitions
Randolph Building
401 Dulany Street
Alexandria, VA 22314

The centralized facsimile number is **(571) 273-8300.**

Telephone inquiries relating to this decision should be directed to Robert DeWitty (571-272-8427).

Ramesh Krishnamurthy
Petitions Examiner
Office of Petitions

cc: Garth S. Hendig
Otago Innovation Limited
c/o Centre for Innovation
87 St. David Street
Dunedia 9016
New Zealand

Enclosure: PTO/SB/96

UNITED STATES PATENT AND TRADEMARK OFFICE

Commissioner for Patents
United States Patent and Trademark Office
P.O. Box 1450
Alexandria, VA 22313-1450
www.uspto.gov

In re Patent No. 6377636
Issue Date: April 23,2002
Application No. 09432295
Filed: November 2,1999
Attorney Docket No. GWI-101

:
:DECISION GRANTING PETITION
:UNDER 37 CFR 1.378(c)
:

This is a decision on the electronic petition, filed October 18,2010 ,under 37 CFR 1.378(c) to accept the unintentionally delayed payment of the 7.5 year maintenance fee for the above-identified patent.

The petition is **GRANTED**.

The maintenance fee is accepted, and the above-identified patent reinstated as of October 18,2010 . This decision also constitutes notice that the fee has been accepted. An electronic copy of the petition and this decision has been created as an entry in the Image File Wrapper. Nevertheless, petitioner should print and retain an independent copy.

Telephone inquiries related to this electronic decision should be directed to the Electronic Business Center at 1-866-217-9197.

PTO/SB/66 (03-09)
Approved for use through 03/31/2012. OMB 0651-0016
U.S. Patent and Trademark Office: U.S. DEPARTMENT OF COMMERCE
Under the Paperwork Reduction Act of 1995, no persons are required to respond to a collection of information unless it displays valid OMB control number.

PETITION TO ACCEPT UNINTENTIONALLY DELAYED PAYMENT OF MAINTENANCE FEE IN AN EXPIRED PATENT (37 CFR 1.378(c))

Patent Number	Issue Date (YYYY-MM-DD)	Application Number	Filing Date (YYYY-MM-DD)	Docket Number (if applicable)
6377636	2002-04-23	09432295	1999-11-02	GWI-101

CAUTION: Maintenance fee (and surcharge, if any) payment must correctly identify: (1) the patent number and (2) the application number of the actual U.S. application leading to issuance of that patent to ensure the fee(s) is/are associated with the correct patent. 37 CFR 1.366(c) and (d).

SMALL ENTITY

☐ Patentee claims, or has previously claimed, small entity status. See 37 CFR 1.27.

LOSS OF ENTITLEMENT TO SMALL ENTITY STATUS

☐ Patentee is no longer entitled to small entity status. See 37 CFR 1.27(g)

NOT Small Entity	Fee	Code	Small Entity	Fee	Code
○	3 ½ year	(1551)	○	3 ½ year	(2551)
◉	7 ½ year	(1552)	○	7 ½ year	(2552)
○	11 ½ year	(1553)	○	11 ½ year	(2553)

SURCHARGE

The surcharge required by 37 CFR 1.20(i)(2) (Fee Code 1558) must be paid as a condition of accepting unintentionally delayed payment of the maintenance fee.

MAINTENANCE FEE (37 CFR 1.20(e)-(g))

The appropriate maintenance fee must be submitted with this petition.

STATEMENT

THE UNDERSIGNED CERTIFIES THAT THE DELAY IN PAYMENT OF THE MAINTENANCE FEE TO THIS PATENT WAS UNINTENTIONAL

PETITIONER(S) REQUEST THAT THE DELAYED PAYMENT OF THE MAINTENANCE FEE BE ACCEPTED AND THE PATENT REINSTATED

THIS PORTION MUST BE COMPLETED BY THE SIGNATORY OR SIGNATORIES

37 CFR 1.378(d) states: "Any petition under this section must be signed by an attorney or agent registered to practice before the Patent and Trademark Office, or by the patentee, the assignee, or other party in interest."

I certify, in accordance with 37 CFR 1.4(d)(4) that I am

◉ An attorney or agent registered to practice before the Patent and Trademark Office

○ A sole patentee

○ A joint patentee; I certify that I am authorized to sign this submission on behalf of all the other patentees.

○ A joint patentee; all of whom are signing this e-petition

○ The assignee of record of the entire interest

PTO/SB/66 (03-09)
Approved for use through 03/31/2012. OMB 0651-0016
U.S. Patent and Trademark Office: U.S. DEPARTMENT OF COMMERCE
Under the Paperwork Reduction Act of 1995, no persons are required to respond to a collection of information unless it displays valid OMB control number.

Patent Practitioner			
A signature of the applicant or representative is required in accordance with 37 CFR 1.33 and 10.18. Please see 37 CFR 1.4(d) for the form of the signature			
Signature	/Kendal M. Sheets/	Date (YYYY-MM-DD)	2010-10-15
Name	Kendal M. Sheets	Registration Number	47077

This collection of information is required by 37 CFR 1.378(c). The information is required to obtain or retain a benefit by the public which is to file (and by the USPTO to process) an application. Confidentiality is governed by 35 U.S.C. 122 and 37 CFR 1.11 and 1.14. This collection is estimated to take 1 hour to complete, including gathering, preparing, and submitting the completed application form to the USPTO. Time will vary depending upon the individual case. Any comments on the amount of time you require to complete this form and/ or suggestions for reducing this burden, should be sent to the Chief Information Officer, U.S. Patent and Trademark Office, U.S. Department of Commerce, P.O. Box 1450, Alexandria, VA 22313-1450. DO NOT SEND FEES OR COMPLETED FORMS TO THIS ADDRESS. **This form can only be used when in conjunction with EFS-Web. If this form is mailed to the USPTO, it may cause delays in reinstating the patent.**

Privacy Act Statement

The Privacy Act of 1974 (P.L. 93-579) requires that you be given certain information in connection with your submission of the attached form related to a patent application or patent. Accordingly, pursuant to the requirements of the Act, please be advised that: (1) the general authority for the collection of this information is 35 U.S.C. 2(b)(2); (2) furnishing of the information solicited is voluntary; and (3) the principal purpose for which the information is used by the U.S. Patent and Trademark Office is to process and/or examine your submission related to a patent application or patent. If you do not furnish the requested information, the U.S. Patent and Trademark Office may not be able to process and/or examine your submission, which may result in termination of proceedings or abandonment of the application or expiration of the patent.

The information provided by you in this form will be subject to the following routine uses:

1. The information on this form will be treated confidentially to the extent allowed under the Freedom of Information Act (5 U.S.C. 552) and the Privacy Act (5 U.S.C. 552a). Records from this system of records may be disclosed to the Department of Justice to determine whether the Freedom of Information Act requires disclosure of these records.

2. A record from this system of records may be disclosed, as a routine use, in the course of presenting evidence to a court, magistrate, or administrative tribunal, including disclosures to opposing counsel in the course of settlement negotiations.

3. A record in this system of records may be disclosed, as a routine use, to a Member of Congress submitting a request involving an individual, to whom the record pertains, when the individual has requested assistance from the Member with respect to the subject matter of the record.

4. A record in this system of records may be disclosed, as a routine use, to a contractor of the Agency having need for the information in order to perform a contract. Recipients of information shall be required to comply with the requirements of the Privacy Act of 1974, as amended, pursuant to 5 U.S.C. 552a(m).

5. A record related to an International Application filed under the Patent Cooperation Treaty in this system of records may be disclosed, as a routine use, to the International Bureau of the World Intellectual Property Organization, pursuant to the Patent Cooperation Treaty.

6. A record in this system of records may be disclosed, as a routine use, to another federal agency for purposes of National Security review (35 U.S.C. 181) and for review pursuant to the Atomic Energy Act (42 U.S.C. 218(c)).

7. A record from this system of records may be disclosed, as a routine use, to the Administrator, General Services, or his/her designee, during an inspection of records conducted by GSA as part of that agency's responsibility to recommend improvements in records management practices and programs, under authority of 44 U.S.C. 2904 and 2906. Such disclosure shall be made in accordance with the GSA regulations governing inspection of records for this purpose, and any other relevant (i.e., GSA or Commerce) directive. Such disclosure shall not be used to make determinations about individuals.

8. A record from this system of records may be disclosed, as a routine use, to the public after either publication of the application pursuant to 35 U.S.C. 122(b) or issuance of a patent pursuant to 35 U.S.C. 151. Further, a record may be disclosed, subject to the limitations of 37 CFR 1.14, as a routine use, to the public if the record was filed in an application which became abandoned or in which the proceedings were terminated and which application is referenced by either a published application, an application open to public inspections or an issued patent.

9. A record from this system of records may be disclosed, as a routine use, to a Federal, State, or local law enforcement agency, if the USPTO becomes aware of a violation or potential violation of law or regulation.

UNITED STATES PATENT AND TRADEMARK OFFICE

Commissioner for Patents
United States Patent and Trademark Office
P.O. Box 1450
Alexandria, VA 22313-1450
www.uspto.gov

SHERIDAN K. SNEDDEN
PILLSBURY WINTHROP SHAW PITTMAN LLP
P.O. BOX 10500
MCLEAN, VA 22102

MAILED

JAN 03 2012

OFFICE OF PETITIONS

In re Patent No. 6,162,053
Issued: December 19, 2000
Application No. 09/432,376
Filed: November 1, 1999
Attorney Docket No: **034920-0000001**

This is a decision regarding your request for acceptance of a fee deficiency submission and loss of small entity status filed December 15, 2011 under 37 CFR 1.28.

On September 1, 1998, the Court of Appeals for the Federal Circuit held that 37 CFR 1.28(c) is the sole provision governing the time for correction of the erroneous payment of the issue fee as a small entity. See DH Technology v. Synergystex International, Inc.. 154 F.33d 1333, 47 USPQ2d 1865 (Fed. Cir. Sept. 1, 1998).

The Office no longer investigates or rejects original or reissue applications under 37 CFR 1.56. 1098 Off. Gaz. Pat. Office 502 (January 3, 1989). Therefore nothing in this Notice is intended to imply that an investigation was done.

Finally, there is no indication that petitioner herein was ever empowered to handle matters related to this patent. If petitioner desires to receive future correspondence regarding this patent, the appropriate power of attorney documentation must be submitted. If the new power of attorney and/or change of address is signed by an assignee, the assignee must comply with the requirements of 37 CFR 3.73(b). This decision will be mailed to petitioner, however, all future correspondence will be mailed solely to the correspondence address of record. If petitioner desires to receive future correspondence regarding any Maintenance Fee Reminder which **may** be mailed concerning this patent, a Fee Address should be submitted to Maintenance Fee Division.

Your fee deficiency submission under 37 CFR 1.28 is hereby accepted and the petition is **GRANTED**. Status as a small entity has also been removed.

Inquiries related to this communication should be directed to the Office of Petitions Staff at (571) 272-3282.

/Patricia Faison-Ball/

Patricia Faison-Ball
Senior Petitions Attorney
Office of Petitions

UNITED STATES PATENT AND TRADEMARK OFFICE

Commissioner for Patents
United States Patent and Trademark Office
P.O. Box 1450
Alexandria, VA 22313-1450
www.uspto.gov

Kenneth P. Lanahan
118-2 Kenneth Drive
Troy, IL 62294

MAILED
FEB 17 2011
OFFICE OF PETITIONS

In re Patent of Lanahan et al. :
Patent No. 6,167,624 :
Issue Date: January 2, 2001 : Decision on Petition
Application No. 09/433,543 :
Filing Date: November 3, 1999 :
For: Synthetic Panel and Method :

This is a decision on the petition under 37 C.F.R. § 1.378(b), filed January 26, 2011, to reinstate the above-identified patent.

The petition is **DISMISSED**.

Facts

The patent issued January 2, 2001.

The inventors of record are Kenneth P. Lanahan, Thomas G. Durham, and Stephen C. Foreman.

The petition is only signed by Kenneth P. Lanahan.

The petition states, "My previous corporate counsel, Bill Fleming, of Barber, Emerson, L.C. in Lawrence, Kansas, was designated to receive notices from the patent office."

The 3.5 year maintenance fee and a $65 surcharge were paid on September 7, 2004. The petition does not state whether or not the fees were paid by Lanahan.

During January 2005, Lanahan moved to Biloxi, Mississippi. Lanahan states, "No one knew where I had moved."

Lanahan asserts Fleming left Barber, Emerson, L.C. ("Barber") during 2007.

The 7.5 year maintenance fee could have been timely paid from January 2, 2008, to July 2, 2008, or with a surcharge from July 3, 2008, to January 2, 2009. The fee was not timely paid. As a result, the patent expired January 3, 2009.

The petition asserts the following problems have negatively impacted Lanahan's ability to pay maintenance fees:

1. Hurricane Katrina and other hurricanes hit Biloxi, his city of residence, during 2005,
2. Lanahan has had two back operations, one of which occurred during October 2009, and
3. Lanahan's wife was diagnosed with cancer during 2010.

The petition states,

> I have a friend that called me after looking up the patent number 1-18-2011 and told me that he had found that the fees [for the patent were] not paid....
>
> The failure to pay maintenance fees was unintentional, and I was not aware that the patent office had issued a notice that the patent had lapsed.

Law

A grantable petition under 37 CFR 1.378(b) must be accompanied by a showing to the satisfaction of the Director that the entire delay in paying the required maintenance fee from the due date for the fee until the filing of a grantable petition pursuant to this paragraph was unavoidable.

In order for a party to show unavoidable delay, the party must show "reasonable care was taken to ensure that the maintenance fee would be promptly paid."[1] The level of "reasonable care" required to be shown is the same as the level of "care or diligence ... generally used and observed by prudent and careful men in relation to their most important business."[2] When determining if a period of delay has been shown to have been unavoidable, the Office will take "all the facts and circumstances into account" and will decide each petition "on a case-by-case basis."[3]

35 U.S.C. 41(c)(1) states, with emphasis added, "The Director may accept the payment of any maintenance fee . . . after the six month grace period if the delay is *shown to the satisfaction of the Director* to have been unavoidable." Therefore, petitioner has the burden of proof. The decision will be based solely on the written, administrative record in existence. A petition will not be granted if petitioner provides insufficient evidence to "show" that the delay was unavoidable.

---

[1] 37 CFR 1.378(b).

[2] *In re Mattulath*, 38 App. D.C. 497, 514-15 (D.C. Cir. 1912). *See also Ray v. Lehman*, 55 F.3d 606, 34 U.S.P.Q.2d (BNA) 1786 (Fed. Cir. 1995) (citations omitted) ("[I]n determining whether a delay in paying a maintenance fee was unavoidable, one looks to whether the party responsible for payment of the maintenance fee exercised the due care of a reasonably prudent person.")

[3] *Smith v. Mossinghoff*, 671 F.2d 533, 538, 213 U.S.P.Q. (BNA) 977 (D.C. Cir. 1982).

The Office and Congress have recognized the unavoidable standard can be very difficult to meet. During 1992, Congress considered the difficulty involved in reinstating a patent under the unavoidable. Congressional representatives described the unavoidable standard as inflexible, extremely hard to meet, too stringent and harsh.[4] Congress did NOT take steps to make the unavoidable standard more flexible, easier too meet, less stringent, or less harsh. Instead, Congress determined that it would allow patent owners the ability to reinstate a patent under an "unintentional" standard as long as the petition was filed within 24 months of the expiration of the patent. Congress chose to continue requiring proof of unavoidable delay for petitions filed after the 24 month time period.

Analysis

As a preliminary matter, the Office notes the petition cannot be granted because the petition is not properly signed.

A petition under 37 C.F.R. § 1.378 must be signed by a registered patent practitioner, the owner(s) of all rights in the patent, or all the inventors. The petition is only signed by Lanahan. The record fails to indicate Lanahan is a registered patent practitioner or demonstrate Lanahan owns all rights in the patents. Therefore, the petition is not properly signed.

If a request for reconsideration is filed, the request must be signed by all three inventors or demonstrate Lanahan owns all rights in the patent.

Even if the petition was properly signed, the petition could not be granted because the petition fails to demonstrate the entire delay in the payment of the 7.5 year maintenance fee was unavoidable.

Pursuant to 37 C.F.R. § 1.378(b), a showing of unavoidable delay must "enumerate the steps taken to ensure timely payment of the maintenance fee." In other words, in order to establish unavoidable delay, Lanahan must identify steps he took to ensure maintenance fees would be timely paid or demonstrate he obligated another party to take such steps on his behalf. The current record fails to identify any steps taken by Lanahan to ensure maintenance fees would be timely paid for the instant patent and fails to demonstrate Lanahan obligated any party to take such steps on his behalf.

Even if the record demonstrated Fleming was legally obligated to track maintenance fee due dates for the instant patent on Lanahan's behalf, the record would be insufficient to demonstrate unavoidable delay because Lanahan did not keep Fleming informed of a current mailing address for Lanahan. A reasonable and prudent person, treating a patent as the person's most important

[4] "[The unavoidable] standard has been found to be extremely hard to meet. Some patent owners have lost their patent rights due to this inflexible standard." 138 CONG. REC. S16613, 16614 (September 30, 1992) (Rep. DeConcini) (emphasis added). "The unavoidable standard has proved to be too stringent in many cases." 138 CONG. REC. H1115 (October 3, 1992) (Rep. Hughes) (emphasis added). "The unavoidable standard is 'too stringent. Some patent owners have lost their patent rights due to circumstances that do not warrant this harsh result, but that could not be considered 'unavoidable' under current law.'" 138 CONG. REC. E1688 (June 4, 1992) (extension of remarks of Rep. McCollum) (emphasis added).

business, would not rely on the receipt of reminders from an attorney after moving to another address without informing the attorney.

Lanahan argues hurricanes and health problems (his and his wife's) negatively impacted Lanahan's ability to pay the maintenance fee. However, Lanahan has failed to demonstrate these events prevented him from taking steps to ensure maintenance fees would be timely paid or from filing a petition to reinstate the patent on an earlier date. In other words, Lanahan has failed to prove the fee would have been timely paid but for the hurricanes and the health problems.

In view of the prior discussion, the showing of record is not sufficient to establish that the entire delay was unavoidable within the meaning of 37 CFR 1.378(b).

The address on the petition is different than the address of record. However, the file does not indicate a request to change the address of record has been filed. Although the instant decision is being mailed to the address on the petition, all future correspondence will be mailed to the current address or record absent submission of a proper request to change the address of record.

Petitioner's Current Options

I. Petitioner may file a request for reconsideration.

Any request for reconsideration must be submitted within TWO (2) MONTHS from the mail date of this decision. Any petition for reconsideration of this decision must be accompanied by a non-refundable petition fee of $400 as set forth in 37 CFR 1.17. Extensions of time under 37 CFR 1.136(a) are NOT permitted. The reconsideration request should include a cover letter entitled "Renewed Petition under 37 CFR 1.378(b)." This is **not** final agency action within the meaning of 5 U.S.C. § 704.

After a decision on the petition for reconsideration is issued, no further reconsideration or review of the matter will be undertaken by the Director. Therefore, it is extremely important that petitioner supply **any** and **all** relevant information and documentation with his request for reconsideration. The Commissioner's decision will be based solely on the administrative record in existence. Petitioner should remember that it is not enough that the delay was unavoidable; petitioner must prove that the delay was unavoidable. A petition will not be granted if petitioner provides insufficient evidence to "show" that the delay was unavoidable. Therefore, if a request for reconsideration is filed, it must establish that the entire delay in the submission of the maintenance fee was unavoidable.

II. Petitioner may request a refund of the maintenance fee and surcharge which accompanied the petition.

Since the petition is dismissed, petitioner may request a refund of the maintenance fee and surcharge. Petitioner is reminded that if a request for reconsideration is later filed along with the $400 fee, the $400 will not be refunded. A request for a refund should be sent to: Mail Stop 16, Commissioner for Patents, P.O. Box 1450, Alexandria, VA 22313-1450. A copy of this decision should accompany any request for refund.

Further correspondence with respect to this matter may be submitted as follows:

By Internet: A request for reconsideration may be filed electronically using EFS Web.[5] Document Code "PET.OP" should be used if the request is filed electronically.

By mail:
Mail Stop Petition
Commissioner for Patents
P.O. Box 1450
Alexandria, VA 22313-1450

By facsimile: (571) 273-8300
Attn: Office of Petitions

By hand:
U.S. Patent and Trademark Office
Customer Service Window
Randolph Building
401 Dulany Street
Alexandria, VA 22314

Telephone inquiries regarding this communication should be directed to Petitions Attorney Steven Brantley at (571) 272-3203.

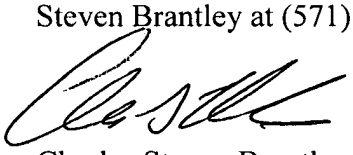

Charles Steven Brantley
Senior Petitions Attorney
Office of Petitions

[5] General Information concerning EFS Web can be found at http://www.uspto.gov/patents/process/file/efs/index.jsp.

US006167624B1

(12) **United States Patent**
Lanahan et al.

(10) **Patent No.: US 6,167,624 B1**
(45) **Date of Patent: *Jan. 2, 2001**

(54) **SYNTHETIC PANEL AND METHOD**

(75) Inventors: **Kenneth P. Lanahan**, Troy, IL (US); **Thomas G. Durham**, Ava, MO (US); **Stephen C. Foreman**, Las Vegas, NV (US)

(73) Assignee: **QB Technologies, L.C.**, Ava, MO (US)

(*) Notice: Under 35 U.S.C. 154(b), the term of this patent shall be extended for 0 days.

This patent is subject to a terminal disclaimer.

(21) Appl. No.: **09/433,543**

(22) Filed: **Nov. 3, 1999**

Related U.S. Application Data

(63) Continuation of application No. 09/322,268, filed on May 28, 1999, now abandoned, which is a continuation of application No. 09/003,747, filed on Jan. 7, 1998, now Pat. No. 5,943,775, which is a continuation-in-part of application No. 08/556,265, filed on Nov. 13, 1995, now Pat. No. 5,842,276.

(51) **Int. Cl.**[7] **B21D 47/00**

(52) **U.S. Cl.** **29/897.32**; 52/309.16; 52/220.2; 52/592.1; 264/142; 264/158; 83/171; 83/16; 83/39

(58) **Field of Search** 29/897.3, 897.32, 29/897.34, 897.1, 402.11, 402.12; 52/309.16, 220.2, 220.3, 592.3, 592.1, 309.2; 264/142, 158; 83/171, 16, 39, 56

(56) **References Cited**

U.S. PATENT DOCUMENTS

726,506	4/1903	Capen .	
1,156,753	10/1915	Carey .	
2,796,158	6/1957	Miles et al.	189/34
3,411,252	11/1968	Boyle, Jr.	52/122
3,487,598	1/1970	Lopina	52/122
3,553,915	1/1971	Passovoy	52/241
3,928,691	12/1975	Knudson	428/53
3,964,221	6/1976	Berquist	52/177
4,037,377	7/1977	Howell et al.	52/309
4,138,808	2/1979	Walkiewicz, Jr.	52/459
4,154,030	5/1979	Huguet	52/98
4,163,349	8/1979	Smith	52/241

(List continued on next page.)

FOREIGN PATENT DOCUMENTS

1609819 6/1970 (DE) .

OTHER PUBLICATIONS

Aug. 1990 Publication from Building Systems Builder (Franklin PA) and entitled "Great Walls".
1997 Catalog entitled "Demand Products" by Demand Products, Inc., pp. 14–19.

Primary Examiner—David P. Bryant
Assistant Examiner—Marc W. Butler
(74) *Attorney, Agent, or Firm*—Townsend and Townsend and Crew, LLP

(57) **ABSTRACT**

A method for producing a polymeric foamed material panel including the steps of providing a polymeric foamed material; and cutting (e.g. hot wire cutting) the polymeric foamed material until reaching a preconfiguration cut point. The method further includes cutting subsequently from the preconfiguration cut point a brace-receiving configuration in the polymeric foamed material; and sliding a brace member into the brace-receiving configuration to produce a polymeric foamed material panel. A method for forming a structure comprising engaging together a pair of polymeric foamed material panels produced in accordance with the method for producing a polymeric foamed material panel. A polymeric foamed material panel comprising a panel consisting of a polymeric foamed material, and a brace-receiving-configured slot disposed in the polymeric foamed material of the panel. A brace member is disposed in the brace-receiving-configured slot in the polymeric foamed material of the panel. The brace-receiving-configured slot includes at least one seared wall.

93 Claims, 31 Drawing Sheets

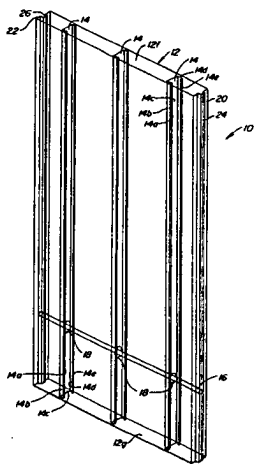

U.S. PATENT DOCUMENTS

4,223,500	9/1980	Clark et al.	52/309
4,224,774	9/1980	Petersen	52/404
4,284,447	8/1981	Dickens et al.	156/78
4,330,921	5/1982	White, Jr.	29/432
4,341,831	7/1982	Kleiss	428/188
4,363,684	12/1982	Hay, II	156/201
4,602,466	7/1986	Larson	52/309
4,608,893	9/1986	Hühue	83/171
4,641,468	2/1987	Slater	52/309
4,683,792	8/1987	Demont	83/874
4,754,678	7/1988	Nichols et al.	83/874
4,774,794	10/1988	Grieb	52/309
4,813,193	3/1989	Altizer	52/210
4,856,244	8/1989	Clapp	52/309
4,862,660	9/1989	Raymond	52/221
4,953,334	9/1990	Dickens	52/309
4,981,003	1/1991	McCarthy	52/309
5,021,108	6/1991	Bergqvist	156/79
5,067,296	11/1991	Brown et al.	52/309
5,072,569	12/1991	VanTassel	52/745
5,218,803	6/1993	Wright	52/243
5,245,809	9/1993	Harrington	52/309
5,265,389	11/1993	Mazzone et al.	52/309
5,269,109	12/1993	Gulur	52/309
5,279,089	1/1994	Gulur	52/309
5,285,607	2/1994	Somerville	52/235
5,353,560	10/1994	Heydon	52/281
5,381,638	1/1995	Anderson	52/592
5,465,541	11/1995	Lin et al.	52/220
5,497,589	3/1996	Porter	52/309
5,497,595	3/1996	Kalinin	52/737
5,519,971	5/1996	Ramierez	52/220
5,524,400	6/1996	Schmechel	52/474
5,660,907	8/1997	Skalka	428/67
5,661,929	9/1997	Ross	52/58
5,722,198	3/1998	Bader	52/745.09
5,799,462	9/1998	McKinney	52/742.13
5,822,940	10/1998	Carlin et al.	52/479
5,893,248	4/1999	Beliveau	52/309.7
5,943,775	8/1999	Lanahan et al. .	

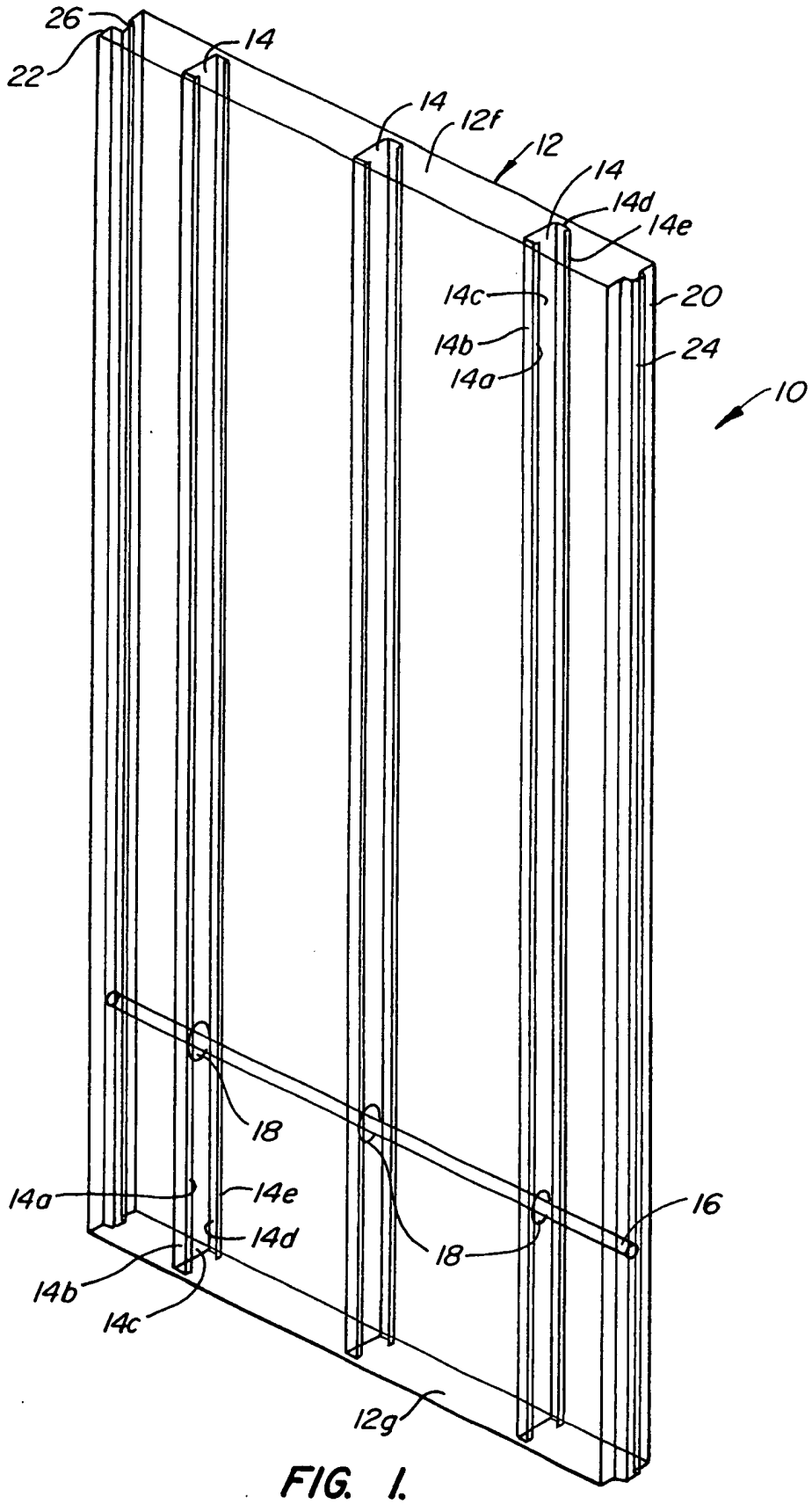
26
22
14
14
12f
12
14
14d
14e
14c
14b
14a
20
24
10
18
14a
14e
14d
14b
14c
18
16
12g

FIG. 1.

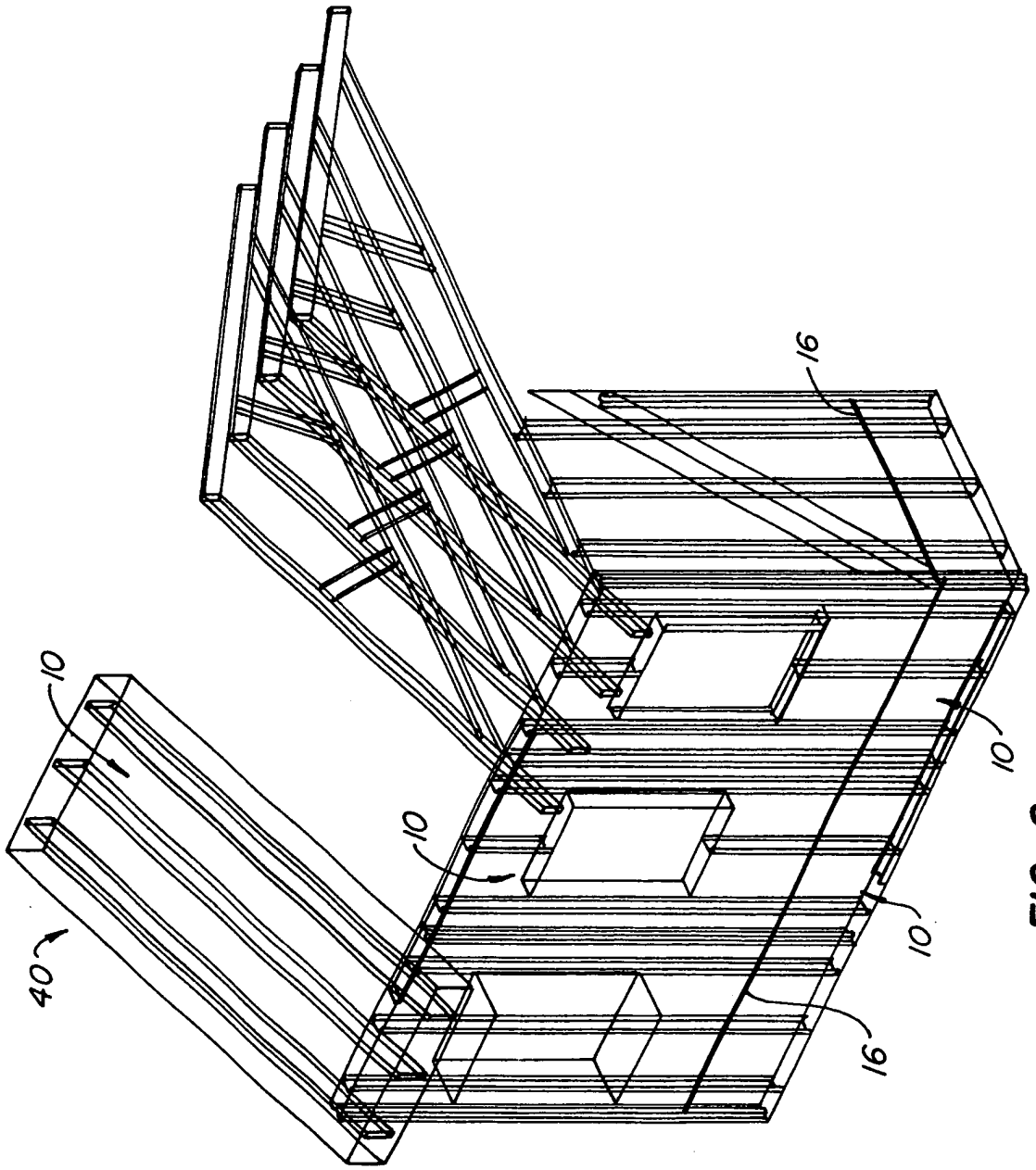

FIG. 2.

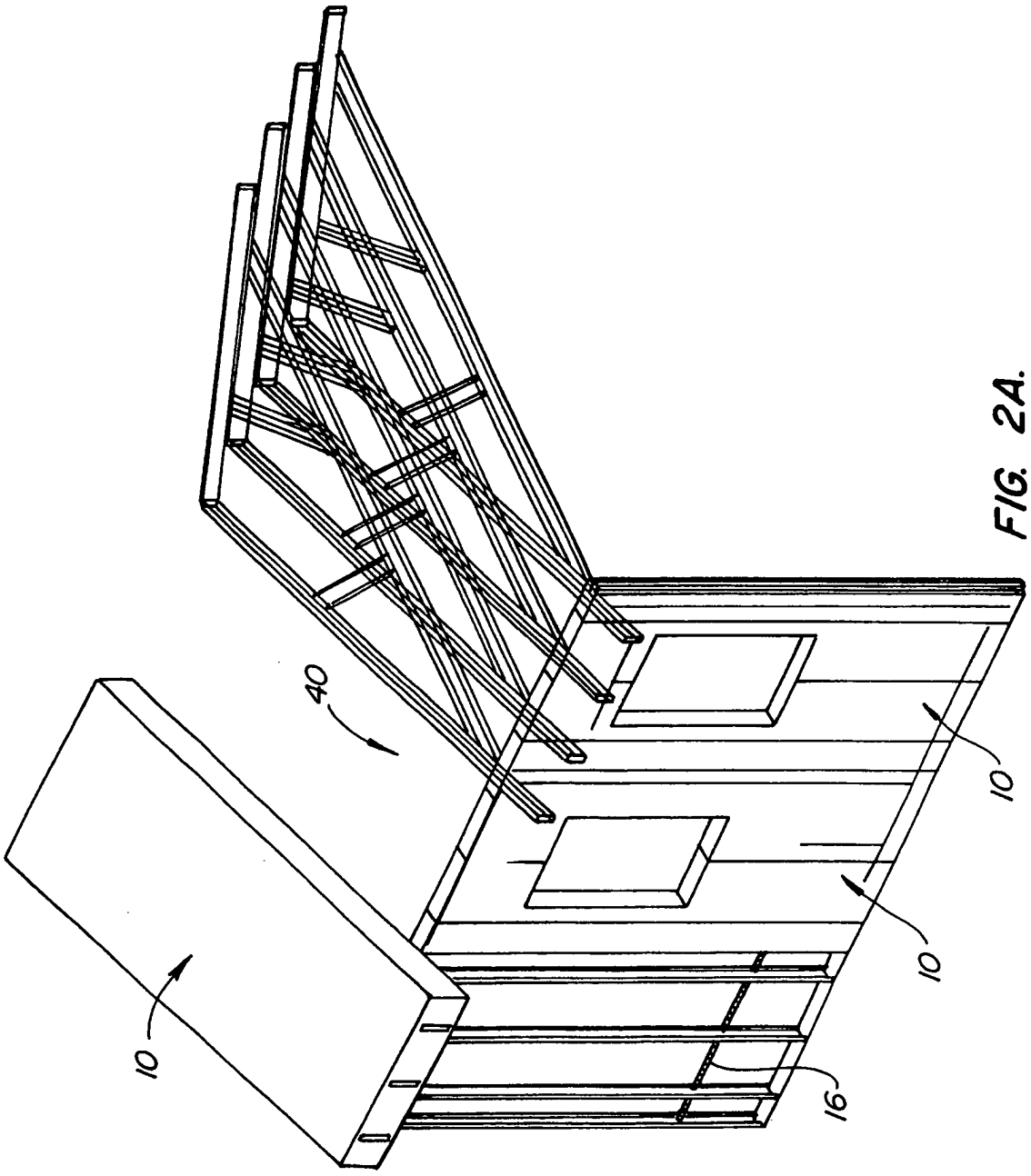

FIG. 2A.

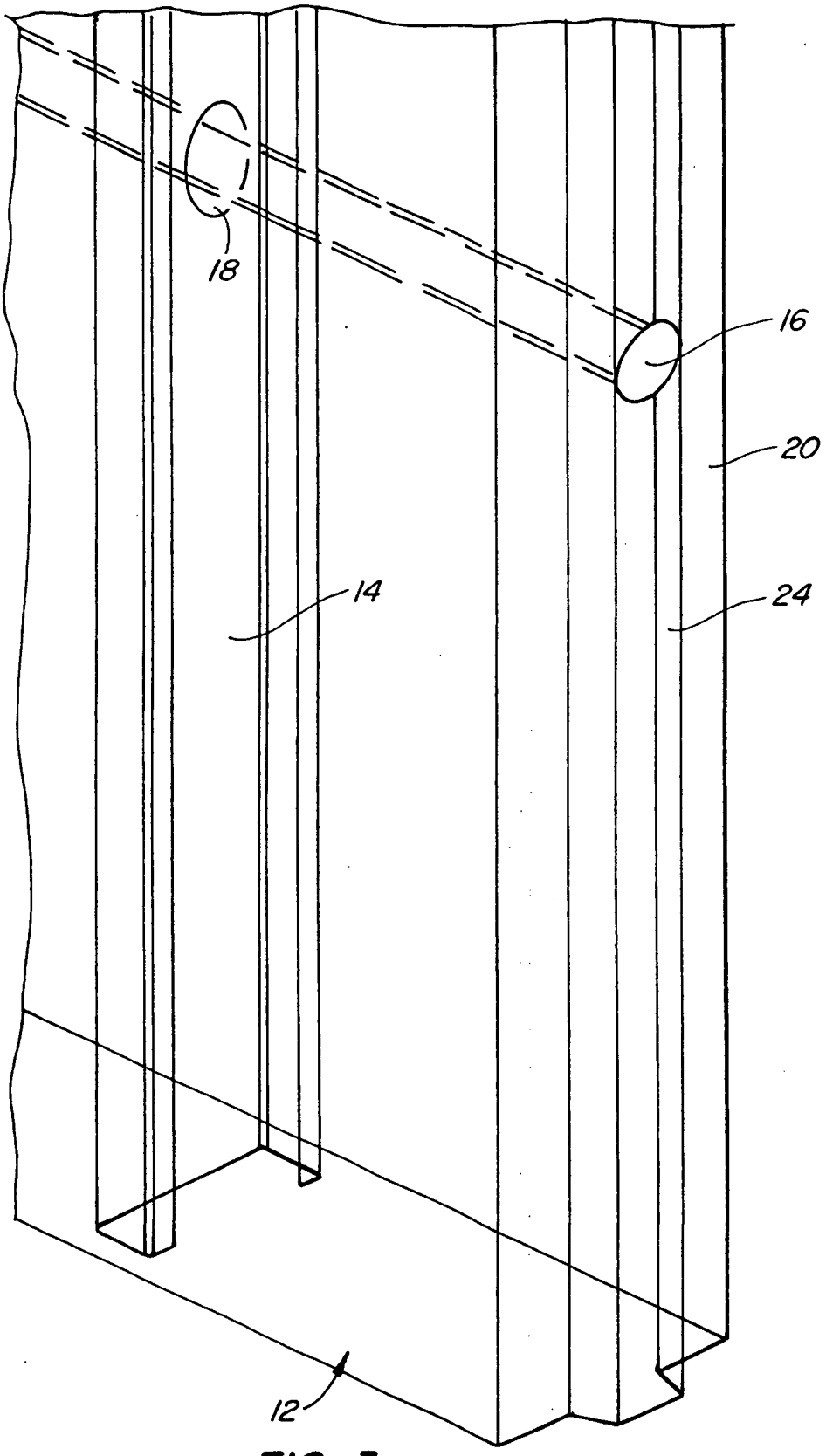

FIG. 3.

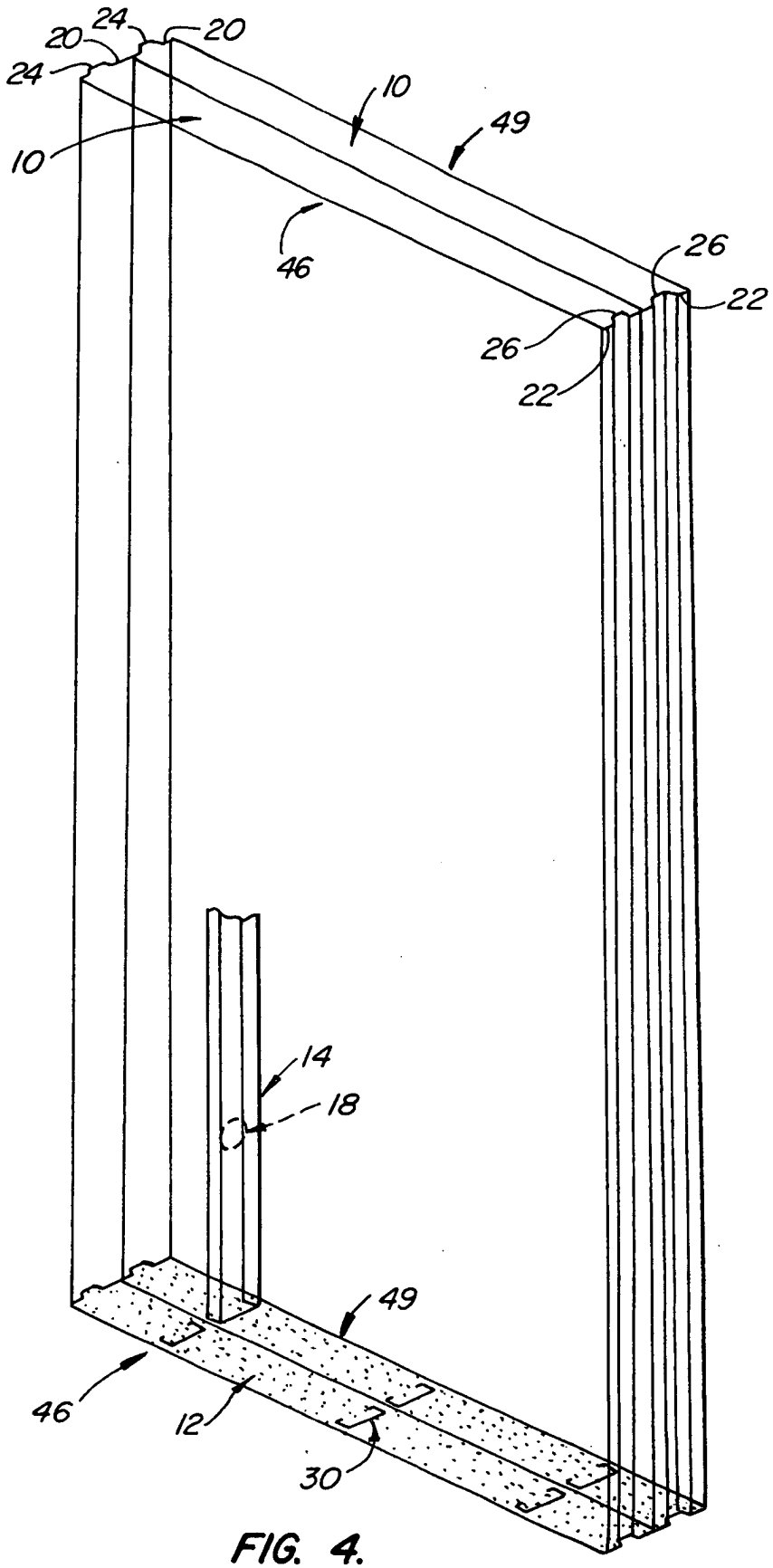

FIG. 4.

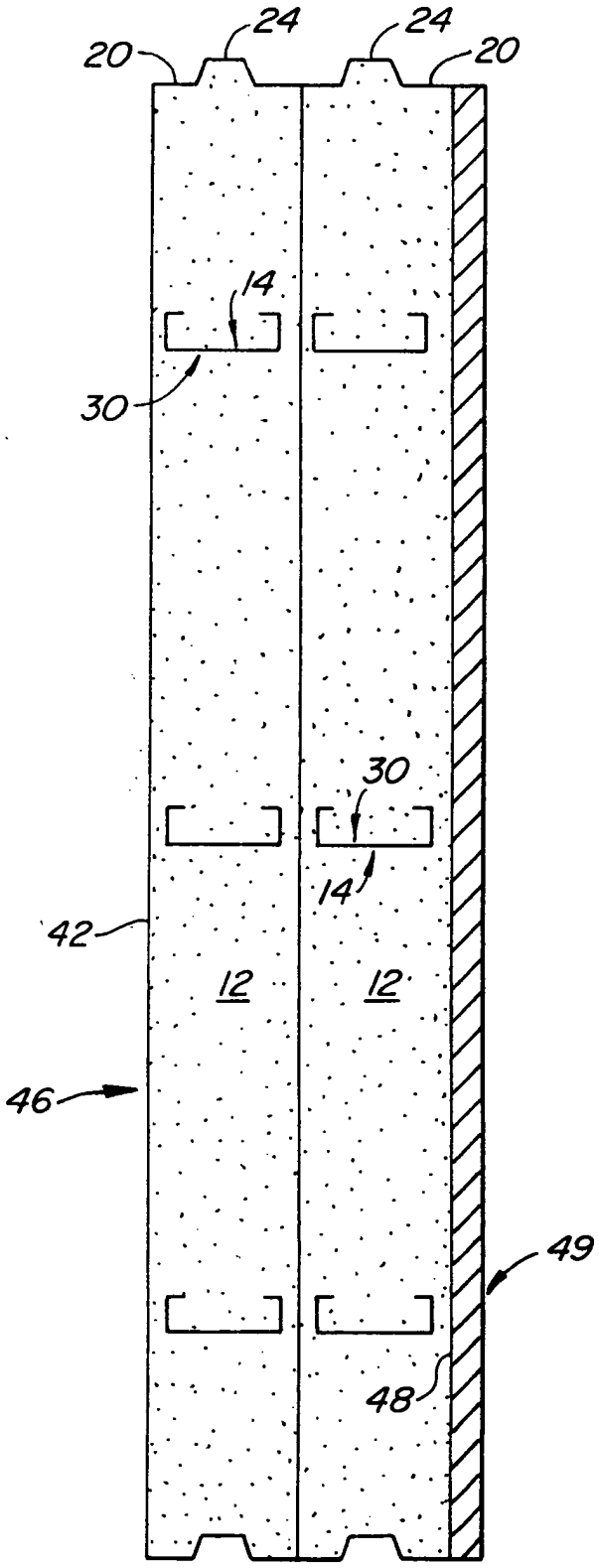

FIG. 5.

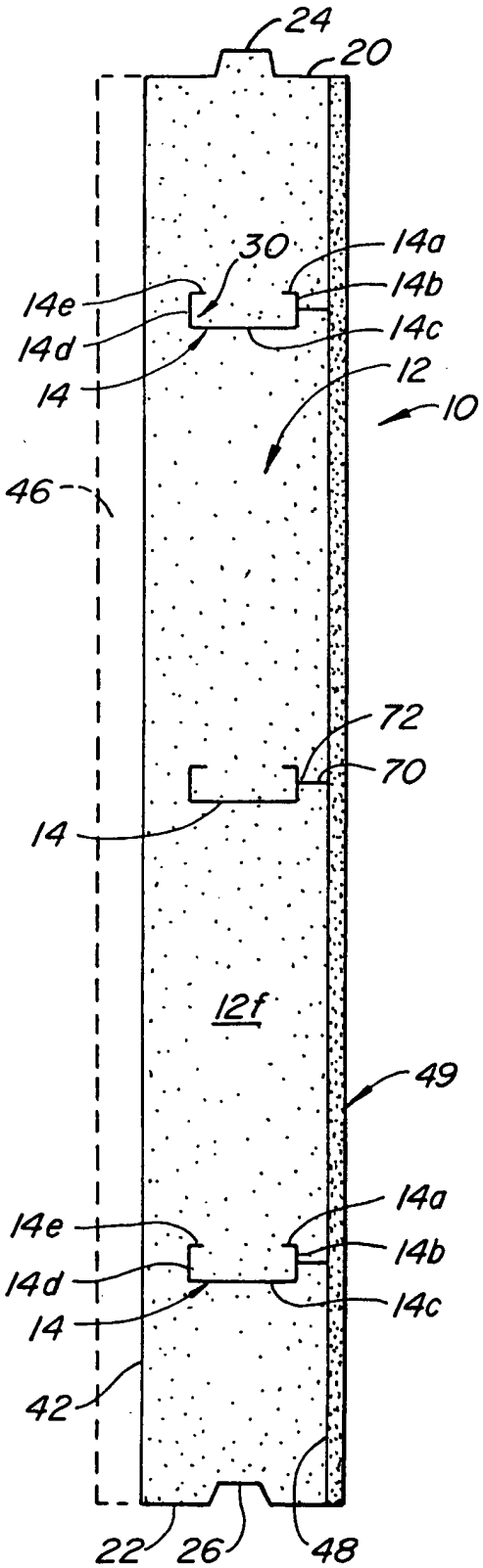
24
20
30
14a
14b
14e
14c
14d
12
14
10
46
72
70
14
12f
49
14e
14a
14b
14d
14c
14
42
22
26
48

FIG. 6.

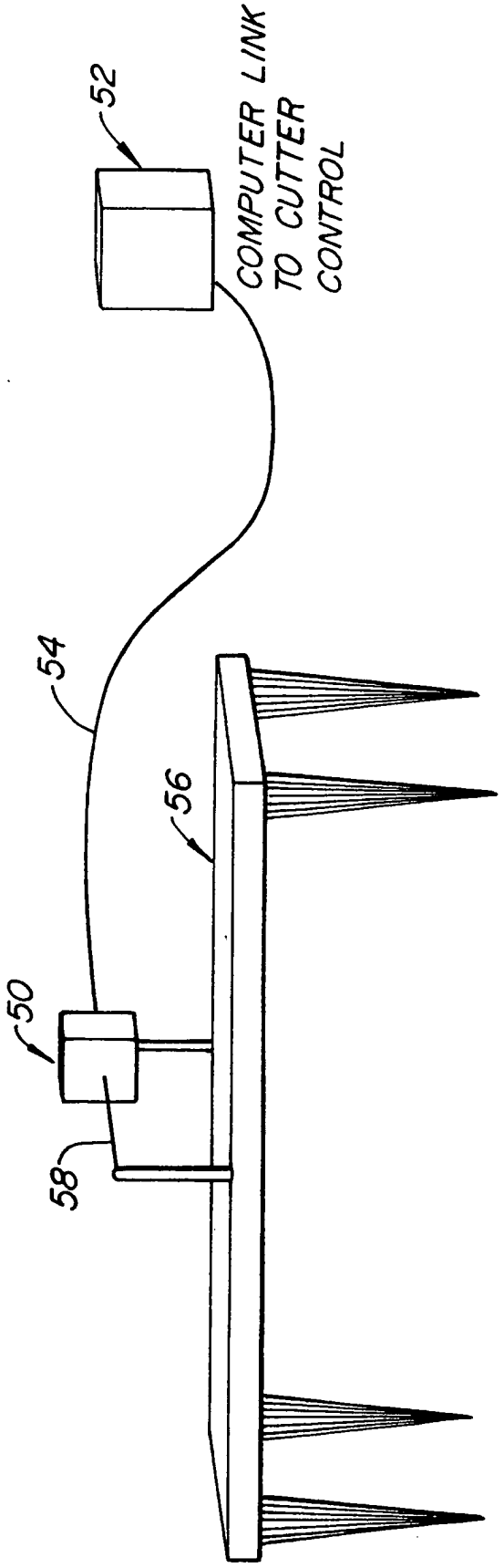

FIG. 7.

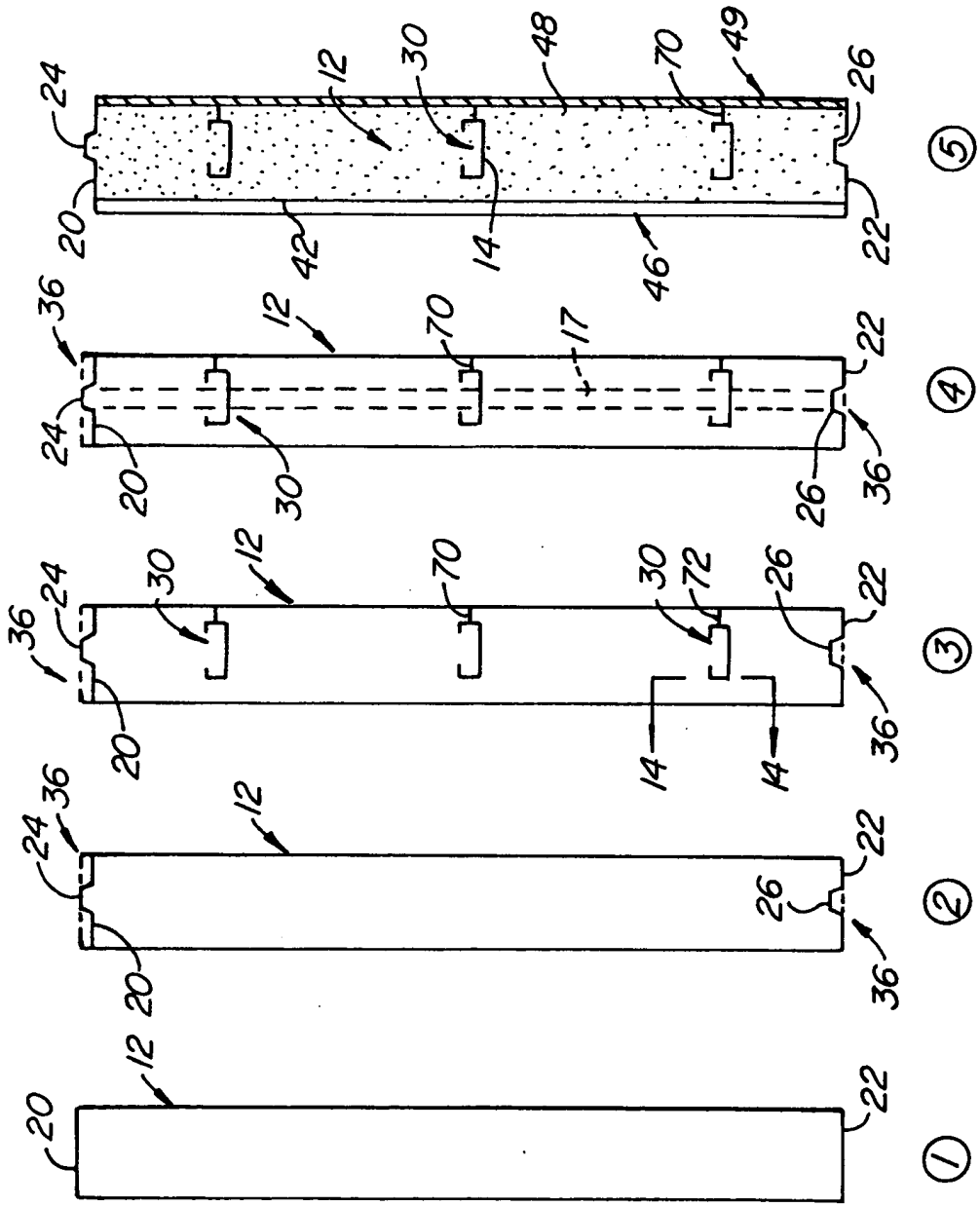
24
12
30
48
70
49
26
20
42
14
46
22
5
36
12
70
17
22
24
20
30
26
36
4
36
24
30
12
70
30
72
26
22
36
20
14
14
3
36
24
12
22
26
36
20
2
12
20
22
1

FIG. 8.

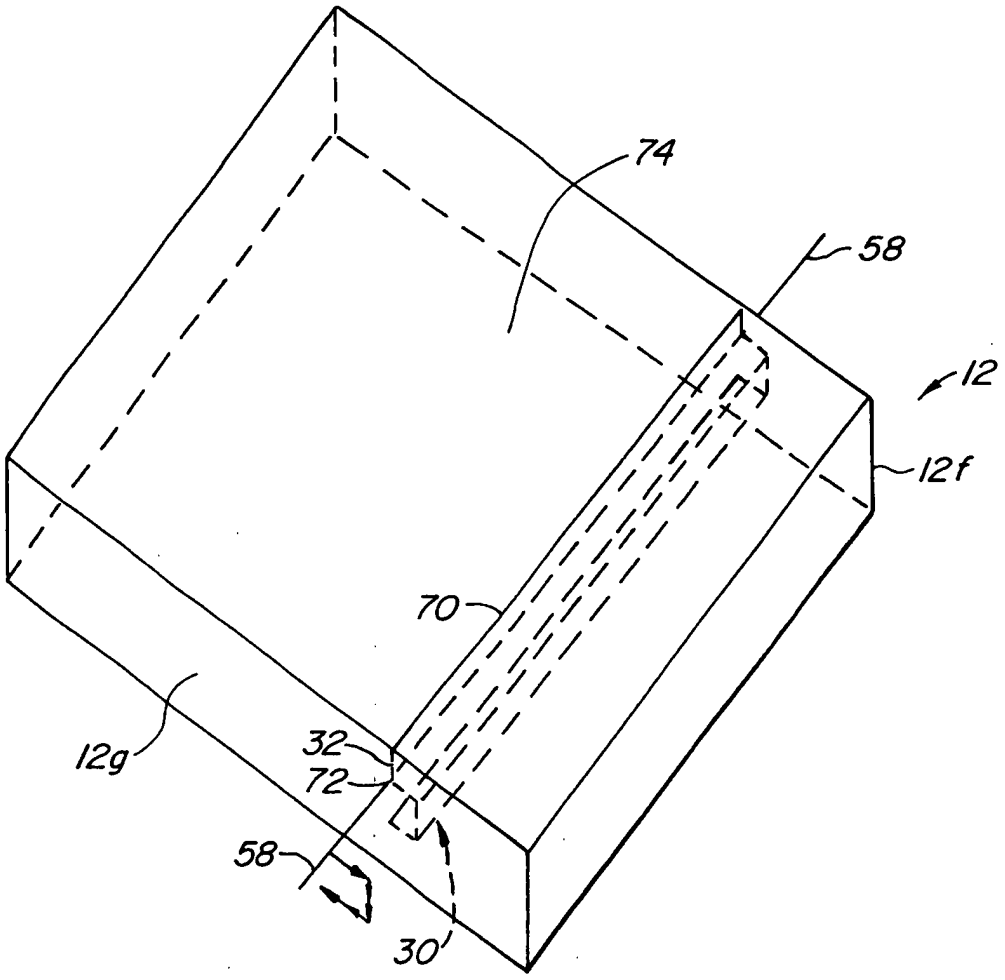
74
58
12
12f
70
12g
32
72
58
30

FIG. 9.

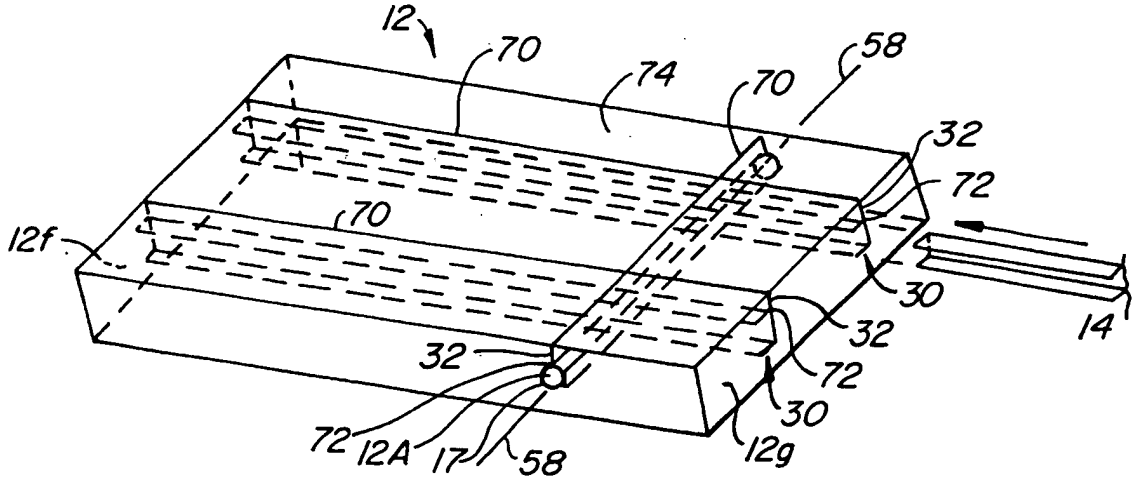
12
70
74
70
58
32
72
12f
70
30
14
32
32
72
30
72
12A
17
58
12g

FIG. 10.

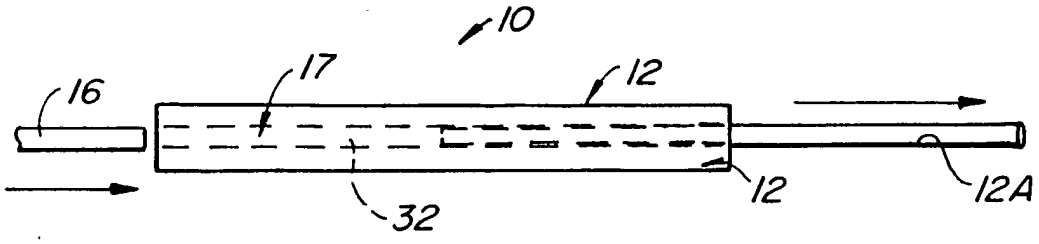

FIG. 11.

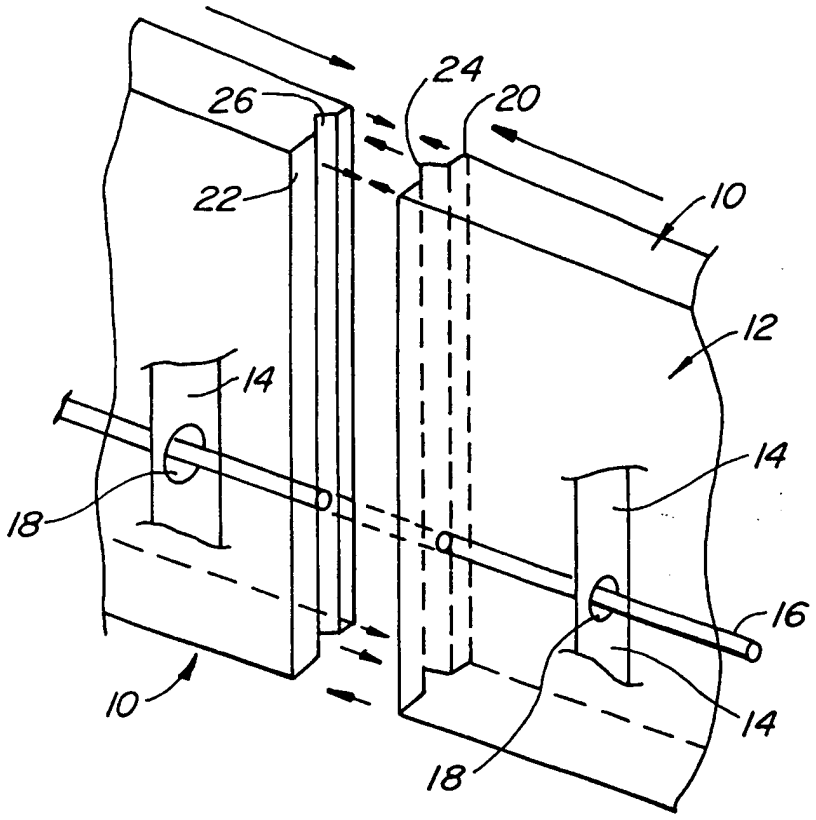

FIG. 13.

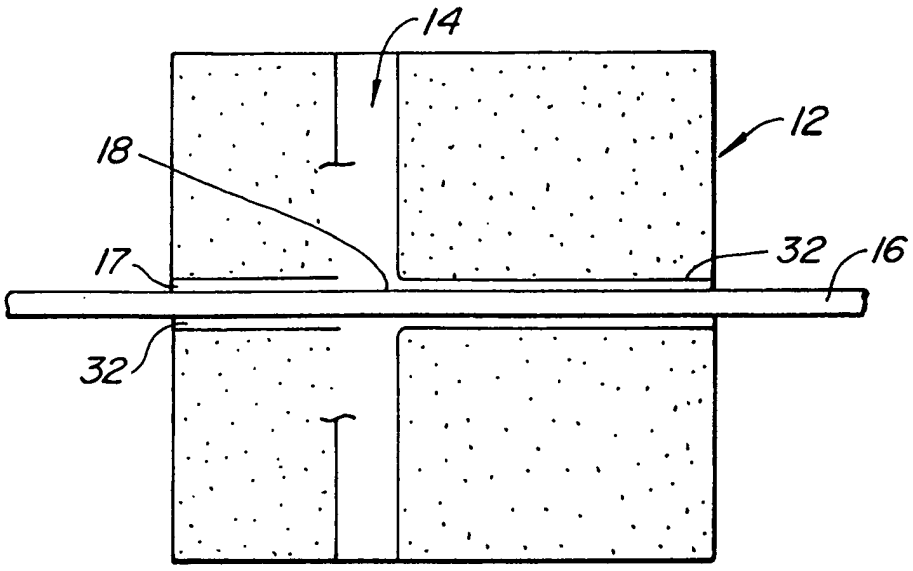

FIG. 12.

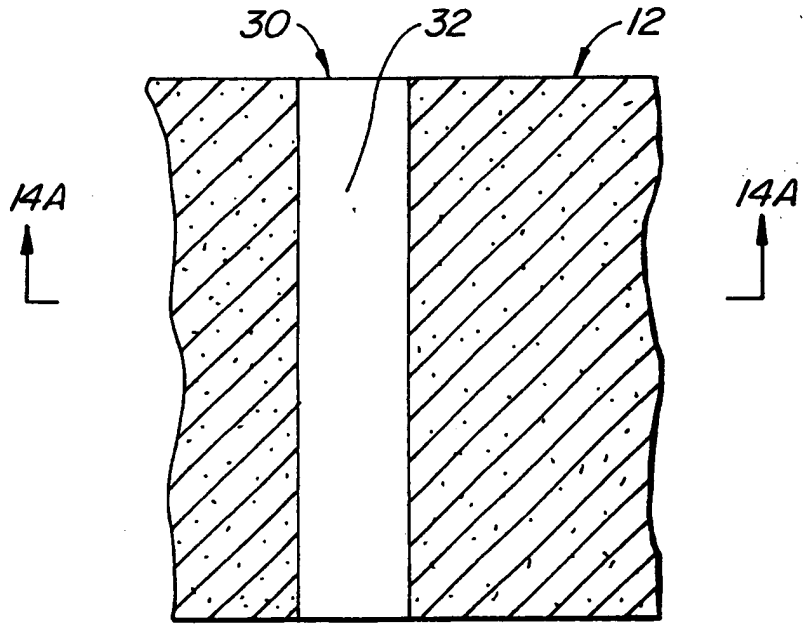

FIG. 14.

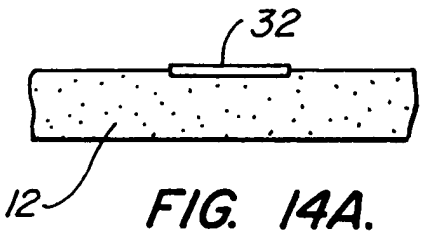

FIG. 14A.

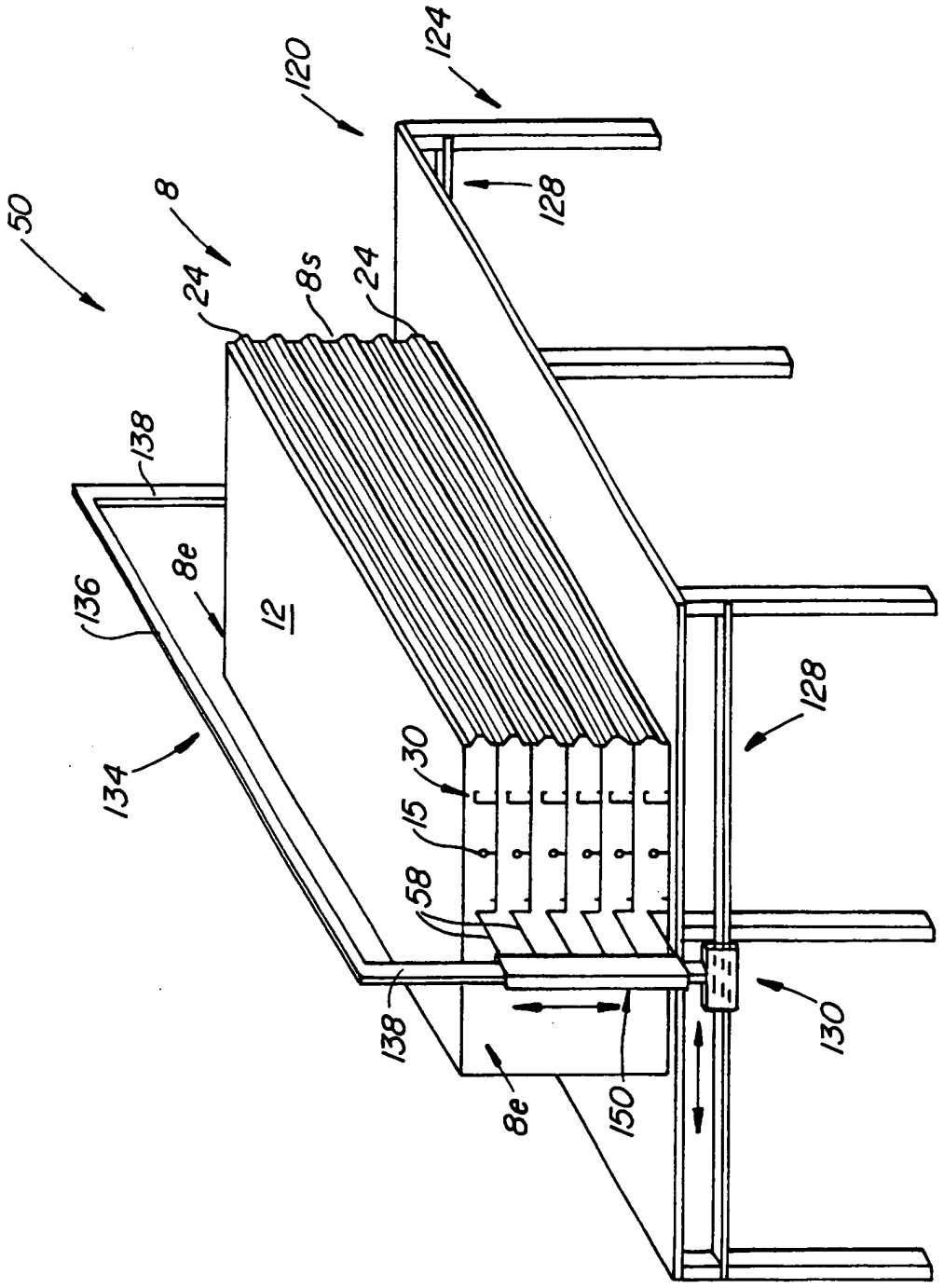
50
8
24
8s
24
120
124
128
138
136
8e
12
134
30
15
58
138
8e
150
128
130

FIG. 15.

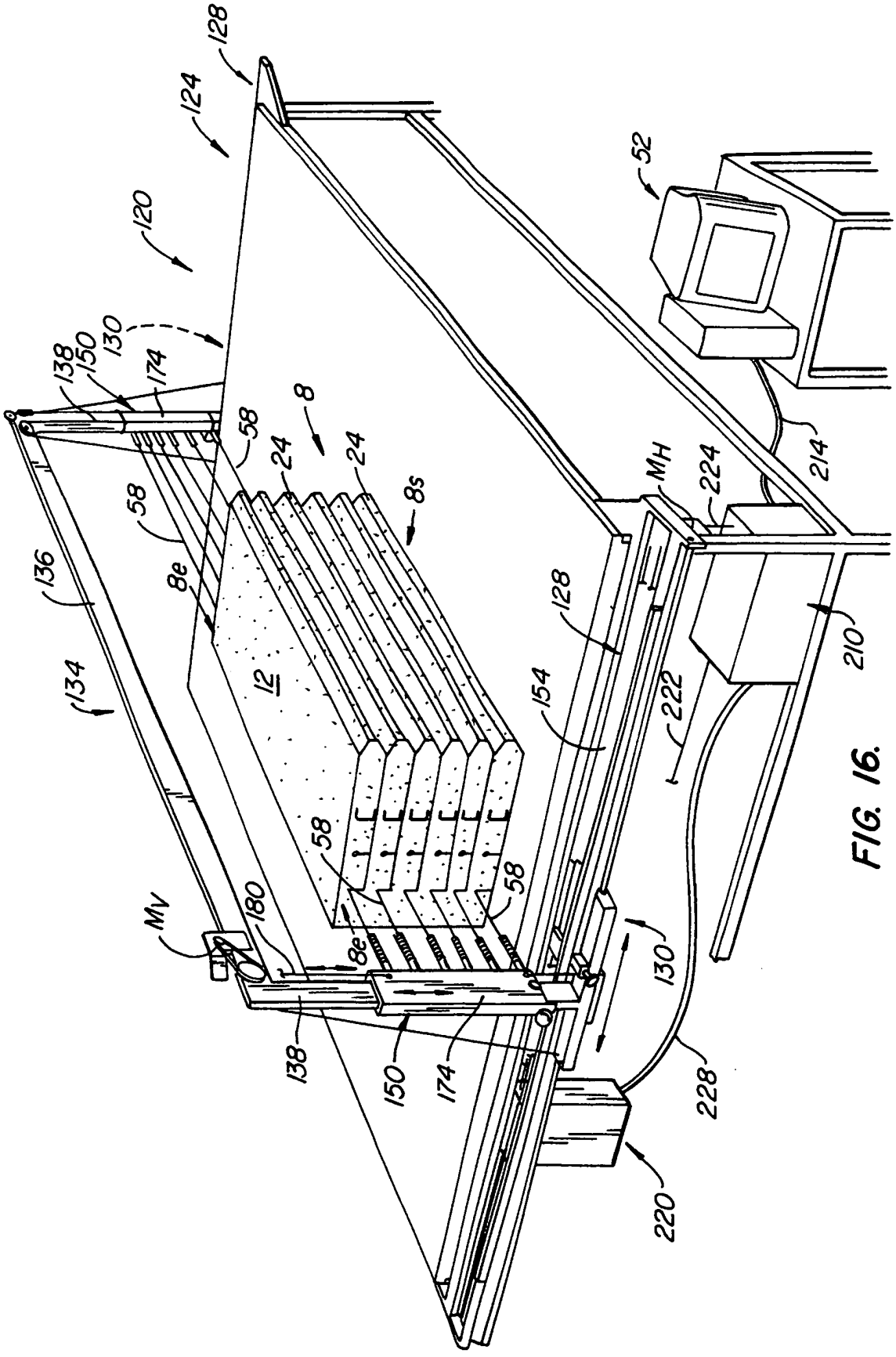
128
124
120
52
130
138
150
174
8
58
24
24
8s
58
8e
136
134
12
MH
224
214
128
154
222
210
58
58
MV
180
8e
130
138
150
174
228
220

FIG. 16.

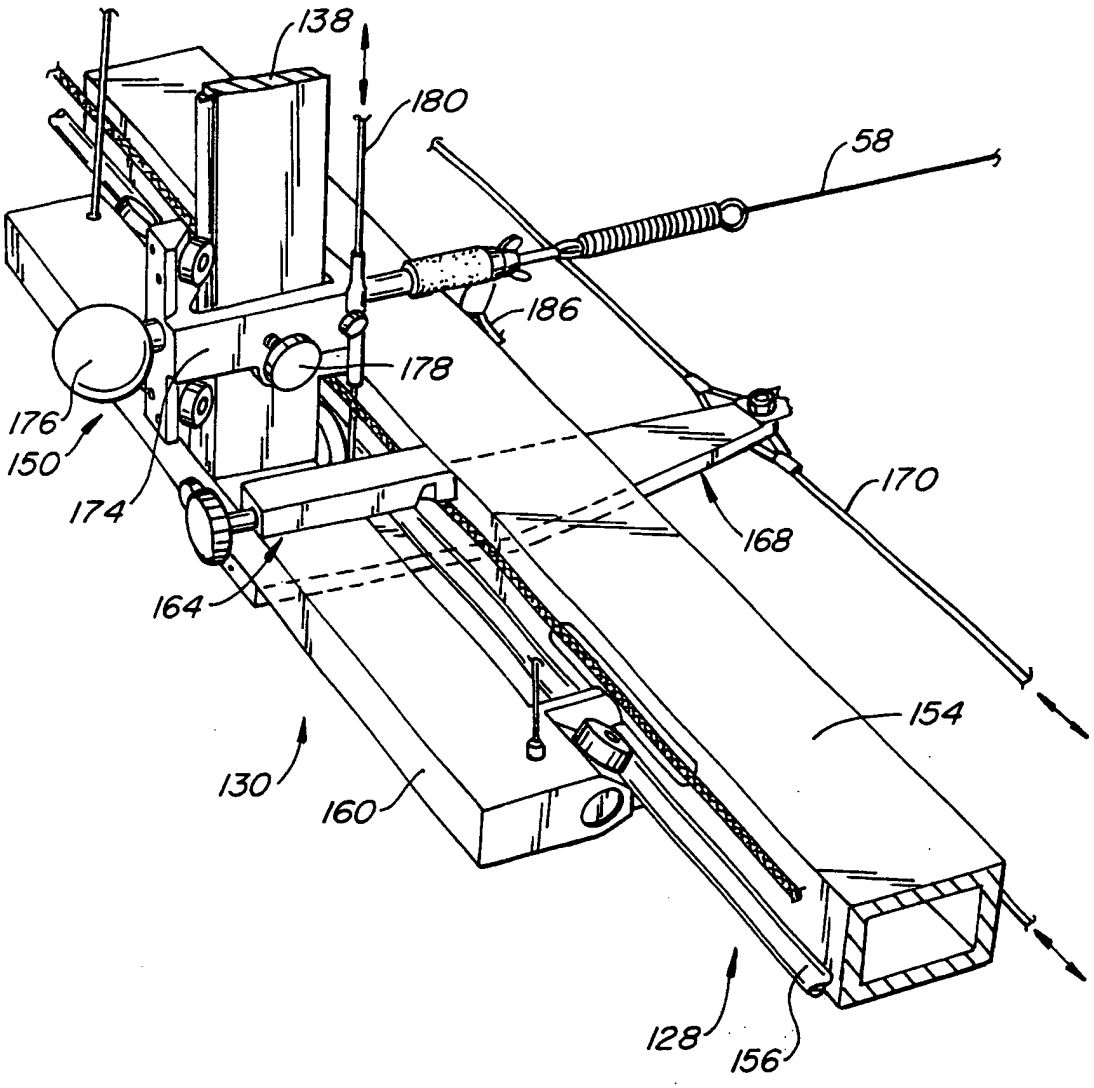

FIG. 17.

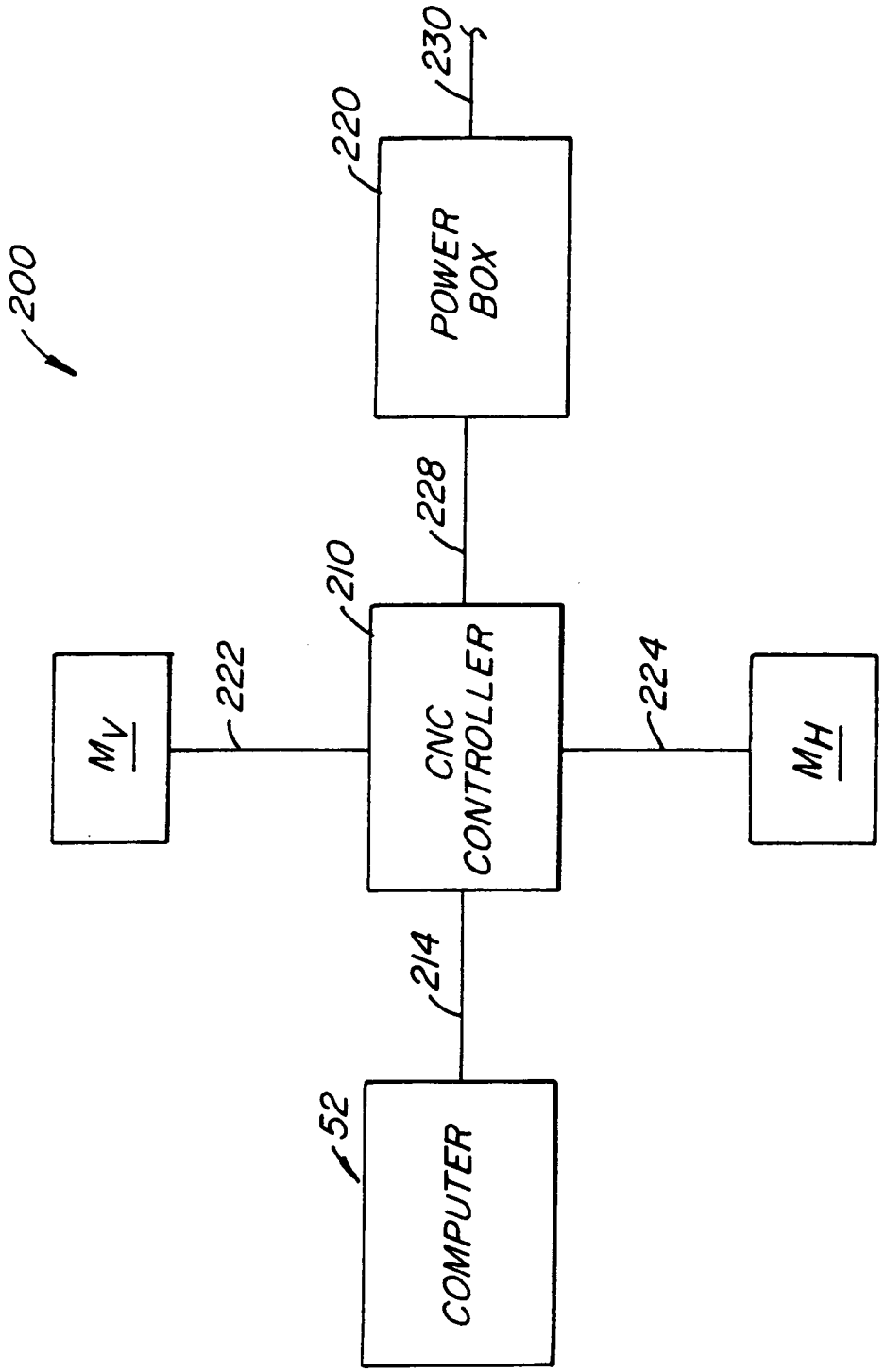
200
220
230
POWER BOX
228
210
CNC CONTROLLER
222
224
M_V
M_H
214
52
COMPUTER

FIG. 18.

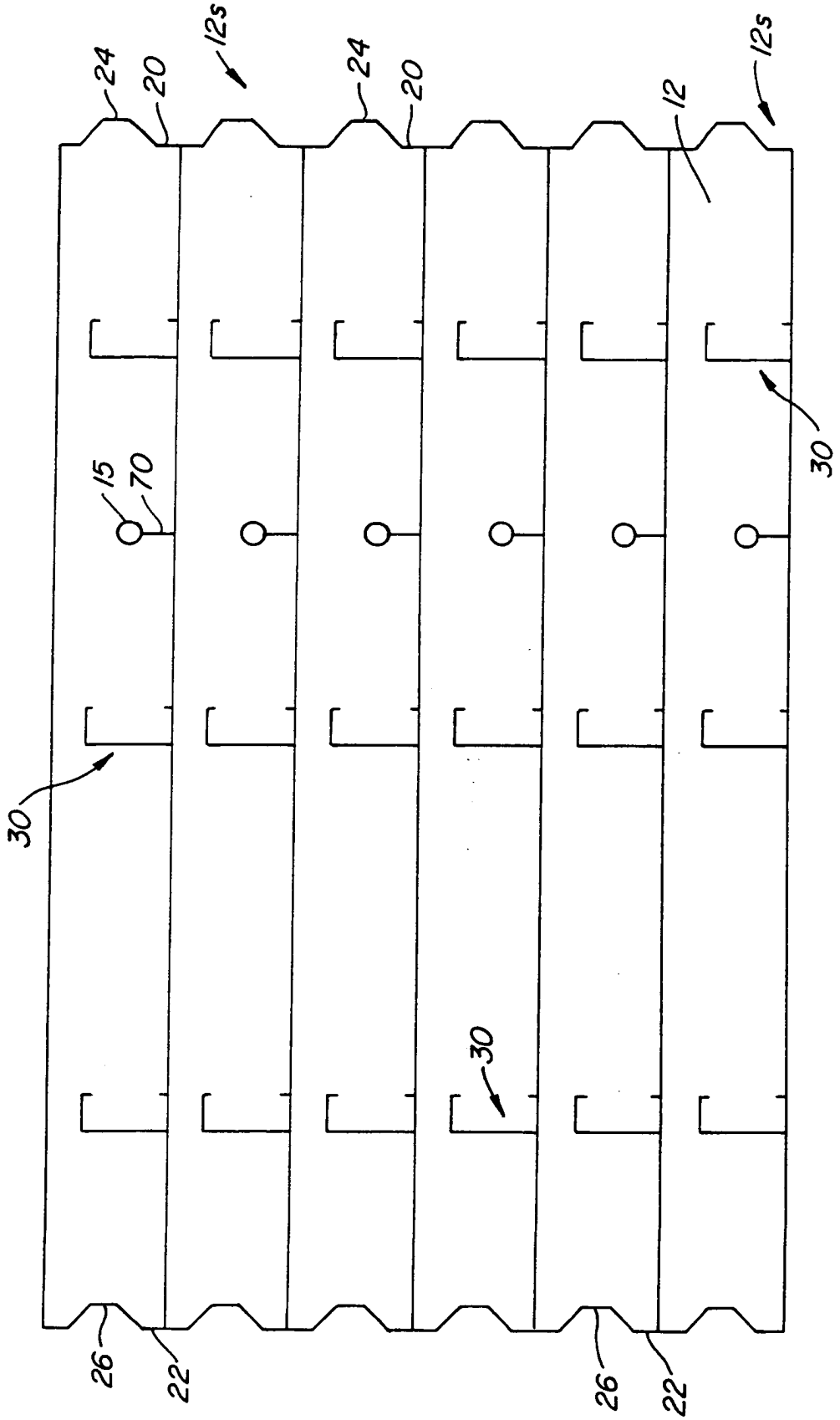

FIG. 19.

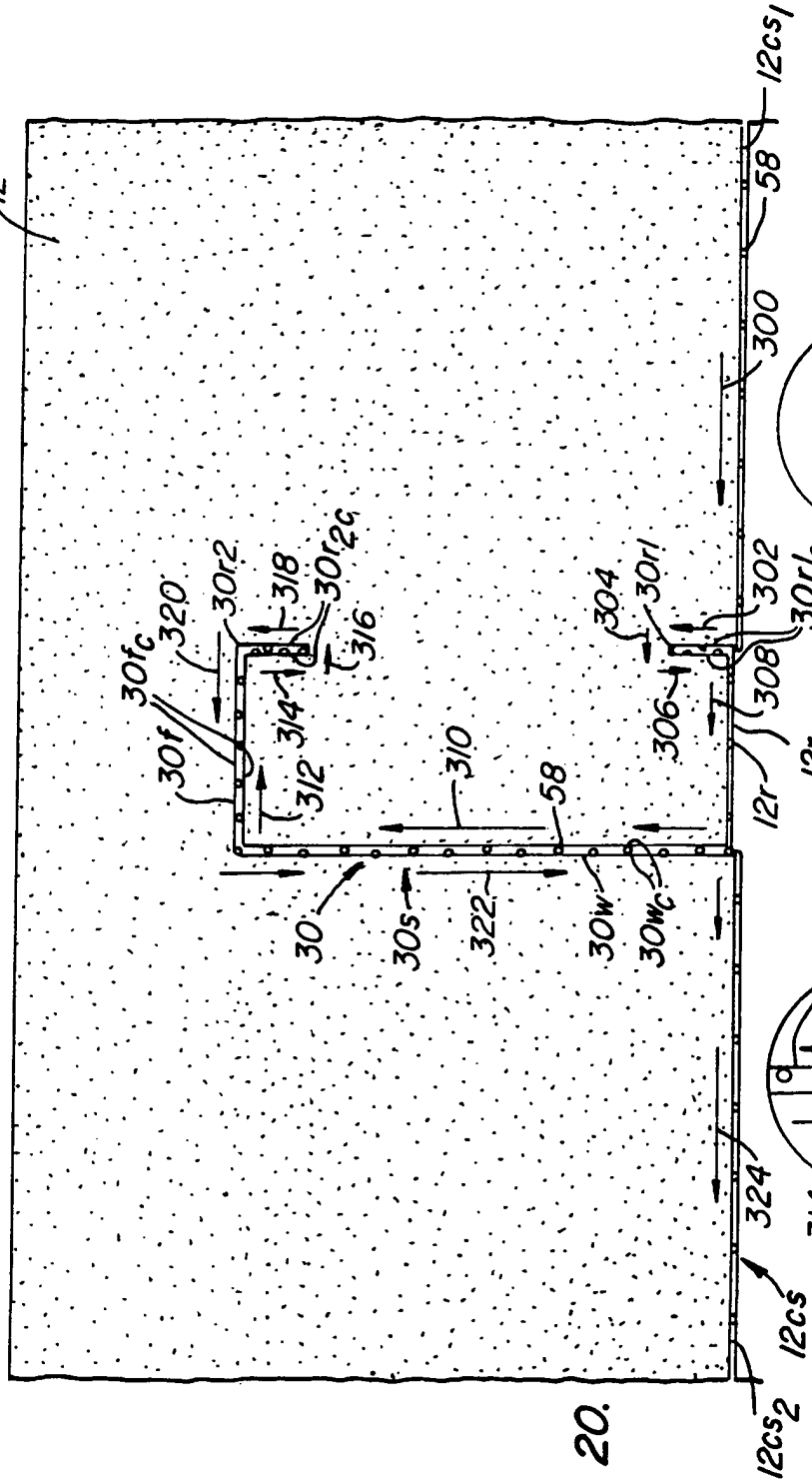

FIG. 20.

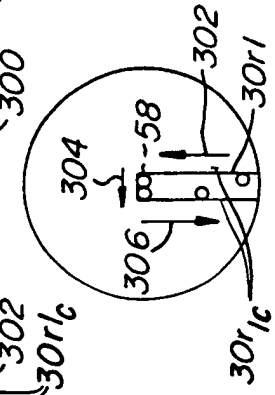

FIG. 22.

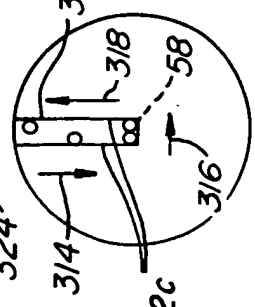

FIG. 21.

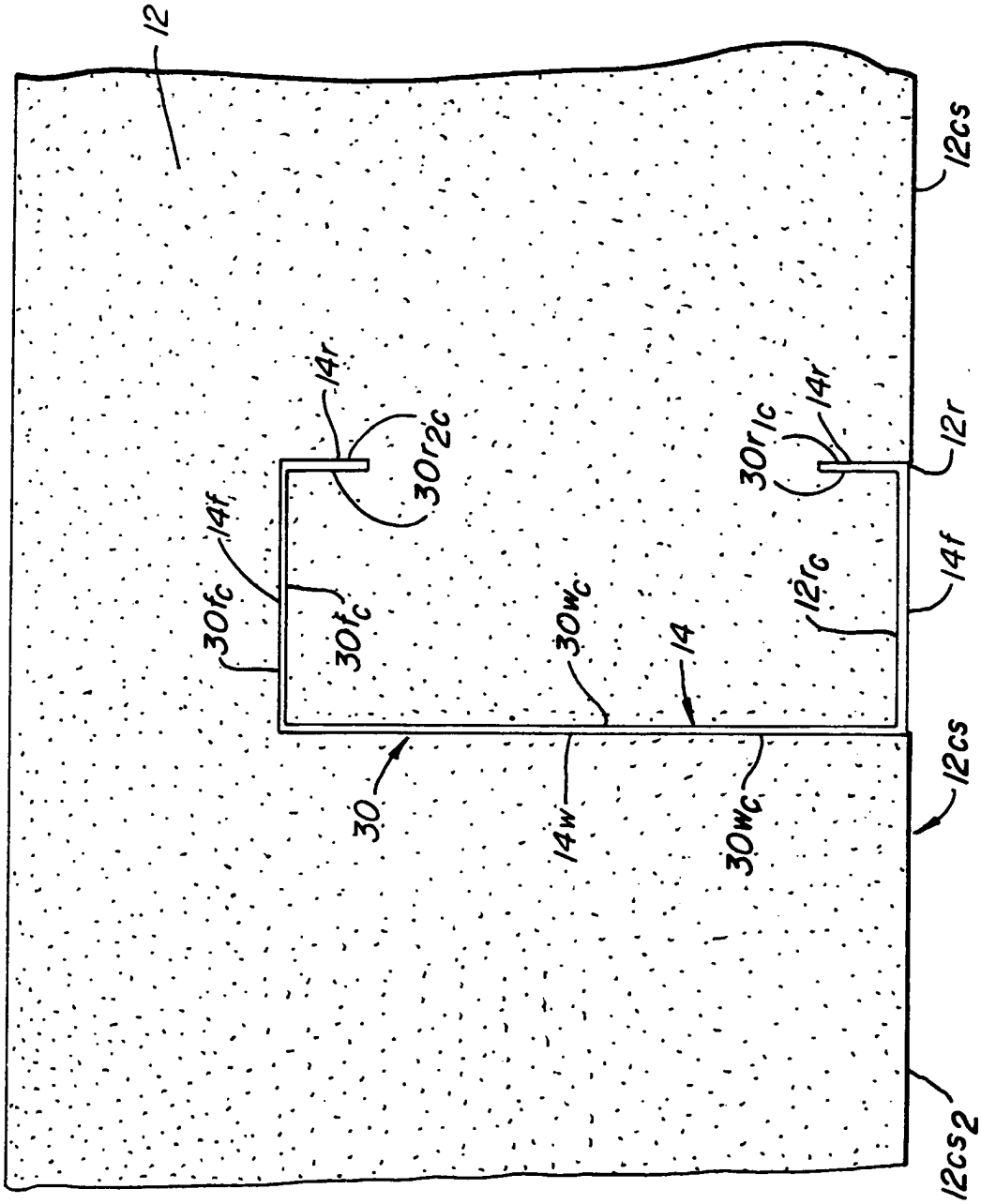
12
12cs
14r
30r2c
30r1c
14r
12r
14f
30fc
30fc
30wc
14
12rc
14f
12cs
30
14w
30wc
12cs2

FIG. 20A.

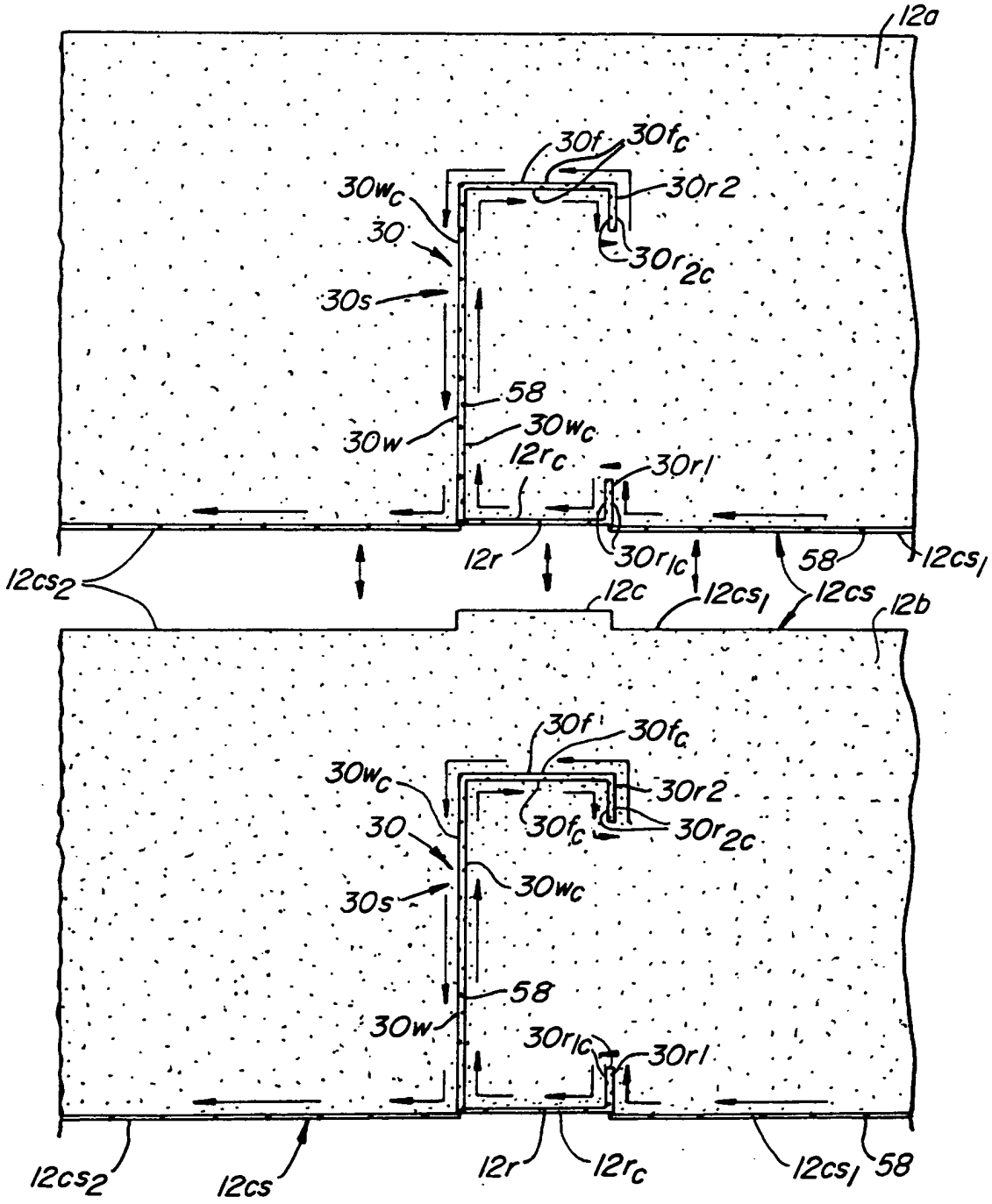
12a
30f
30fc
30wc
30r2
30
30r2c
30s
58
30w
30wc
12rc
30r1
12r
30r1c
58
12cs1
12cs2
12c
12cs1
12cs
12b
30f
30fc
30wc
30r2
30
30fc
30r2c
30wc
30s
58
30w
30r1c
30r1
12cs2
12cs
12r
12rc
12cs1
58

FIG. 20B.

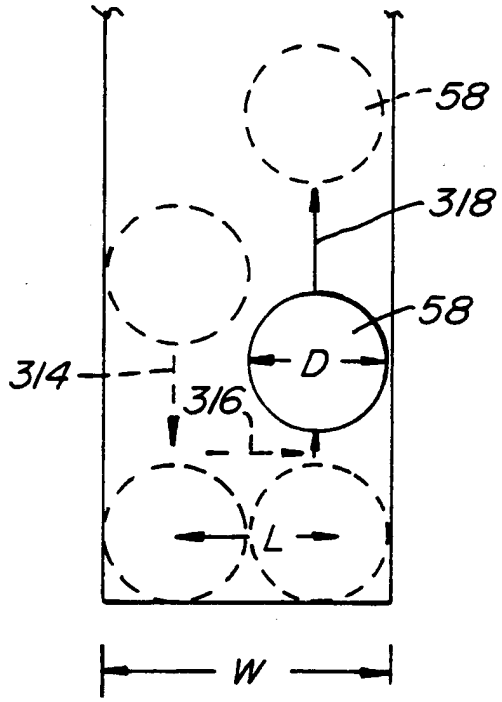

FIG. 23.

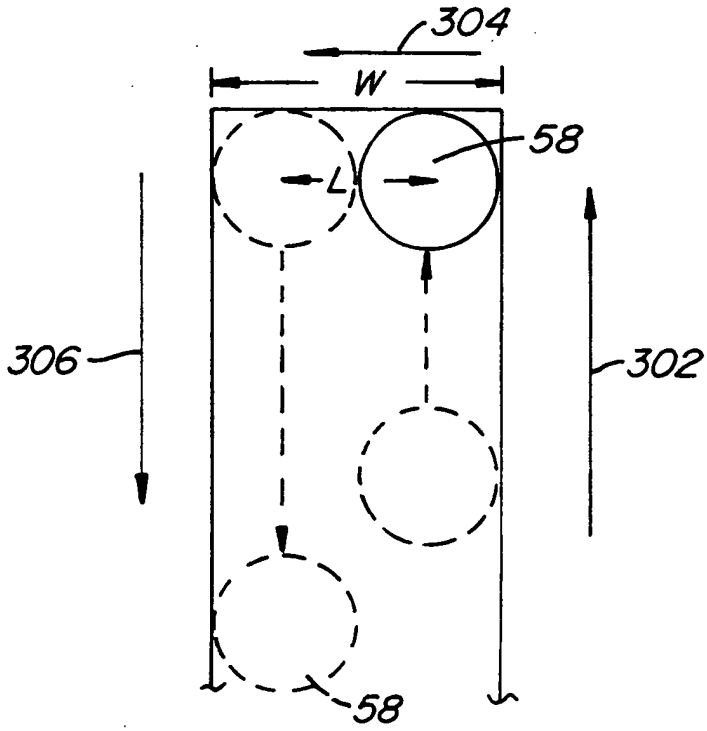

FIG. 24.

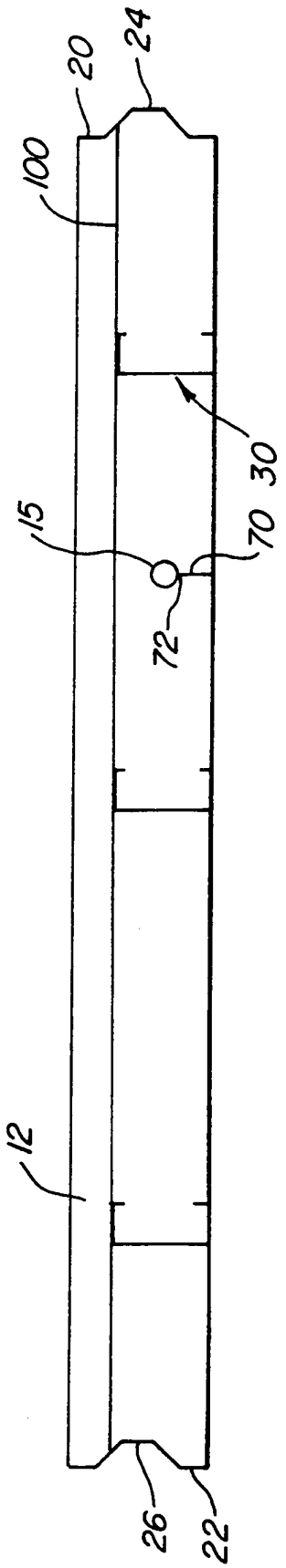

FIG. 25.

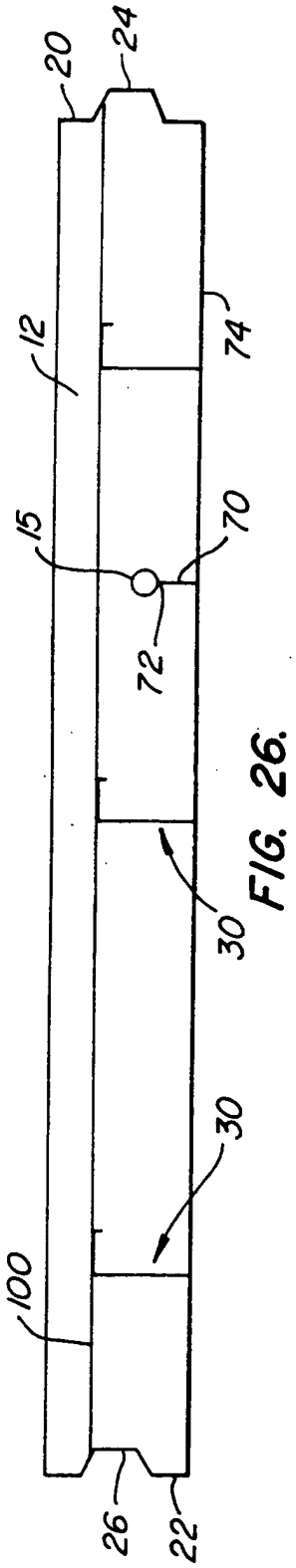

FIG. 26.

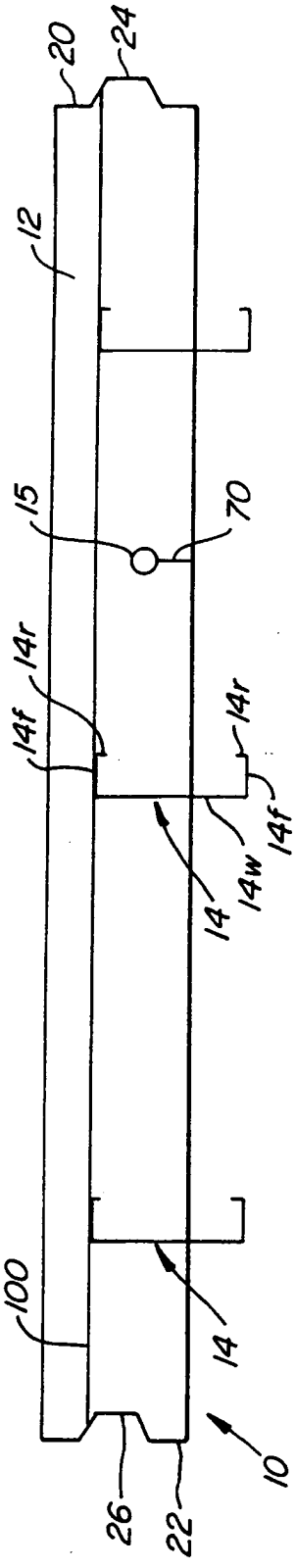

FIG. 27.

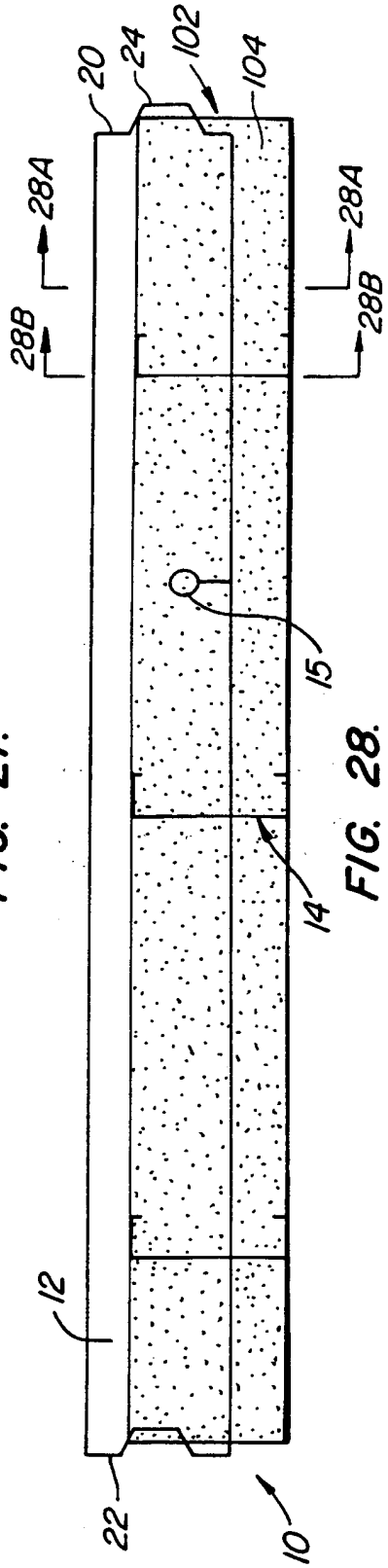

FIG. 28.

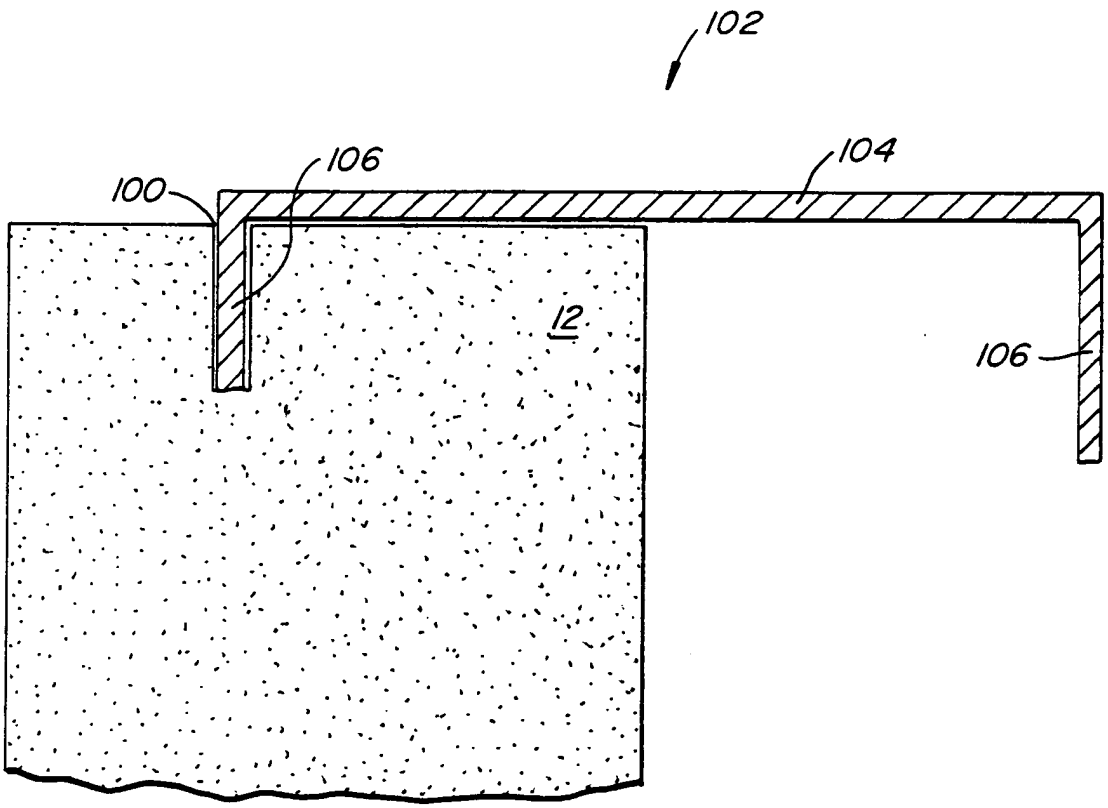

FIG. 28A.

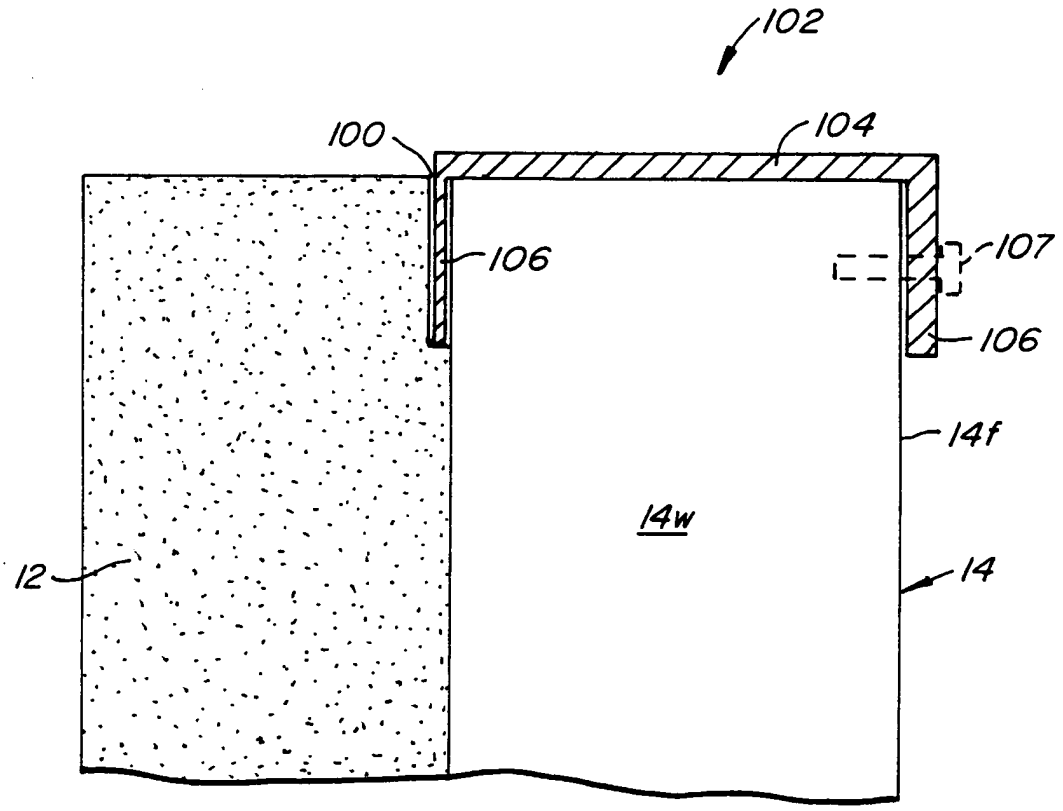

FIG. 28B.

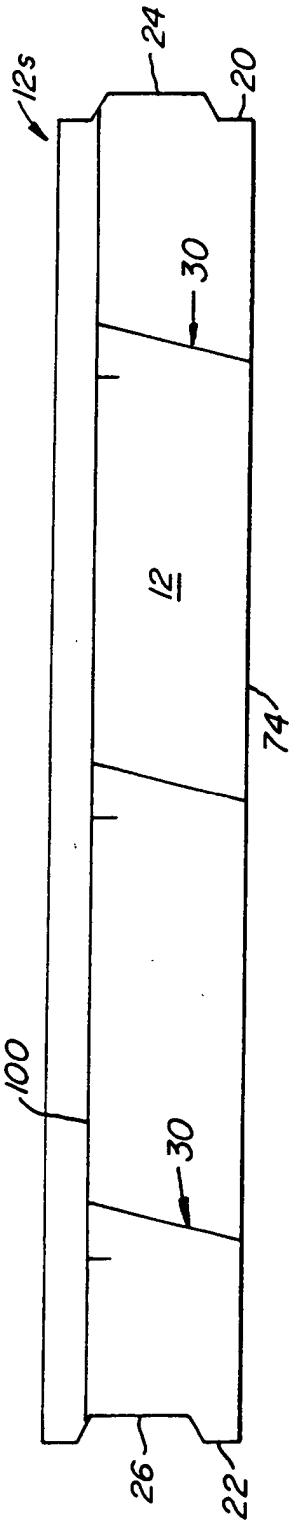

FIG. 29.

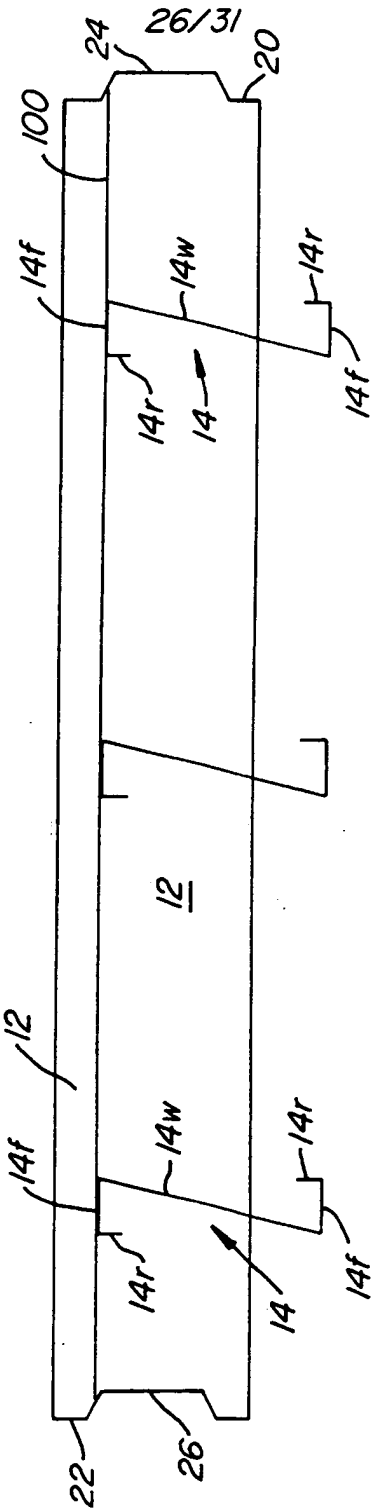

FIG. 30.

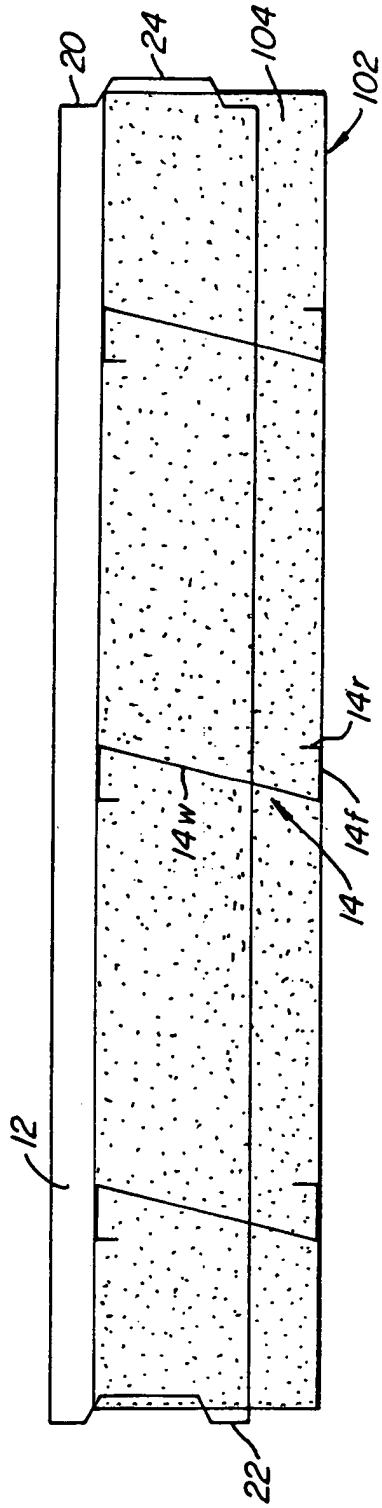

FIG. 31.

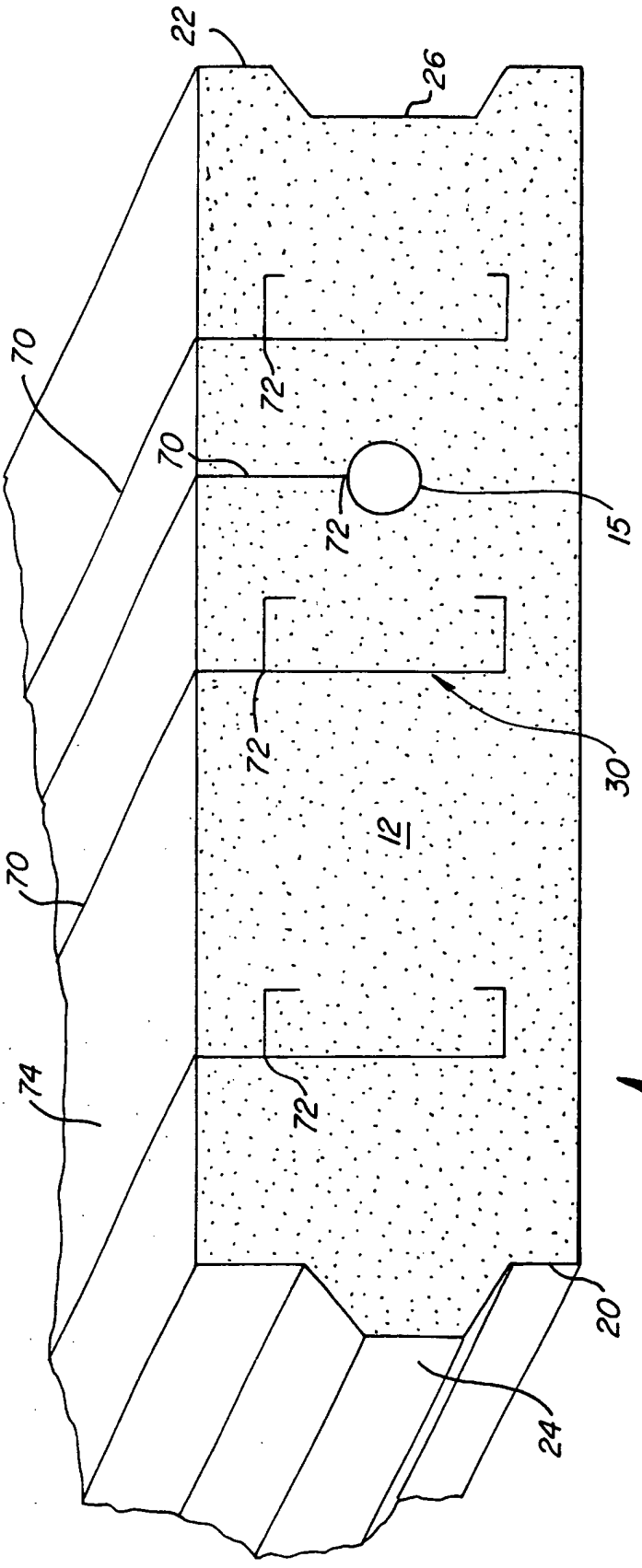

FIG. 32.

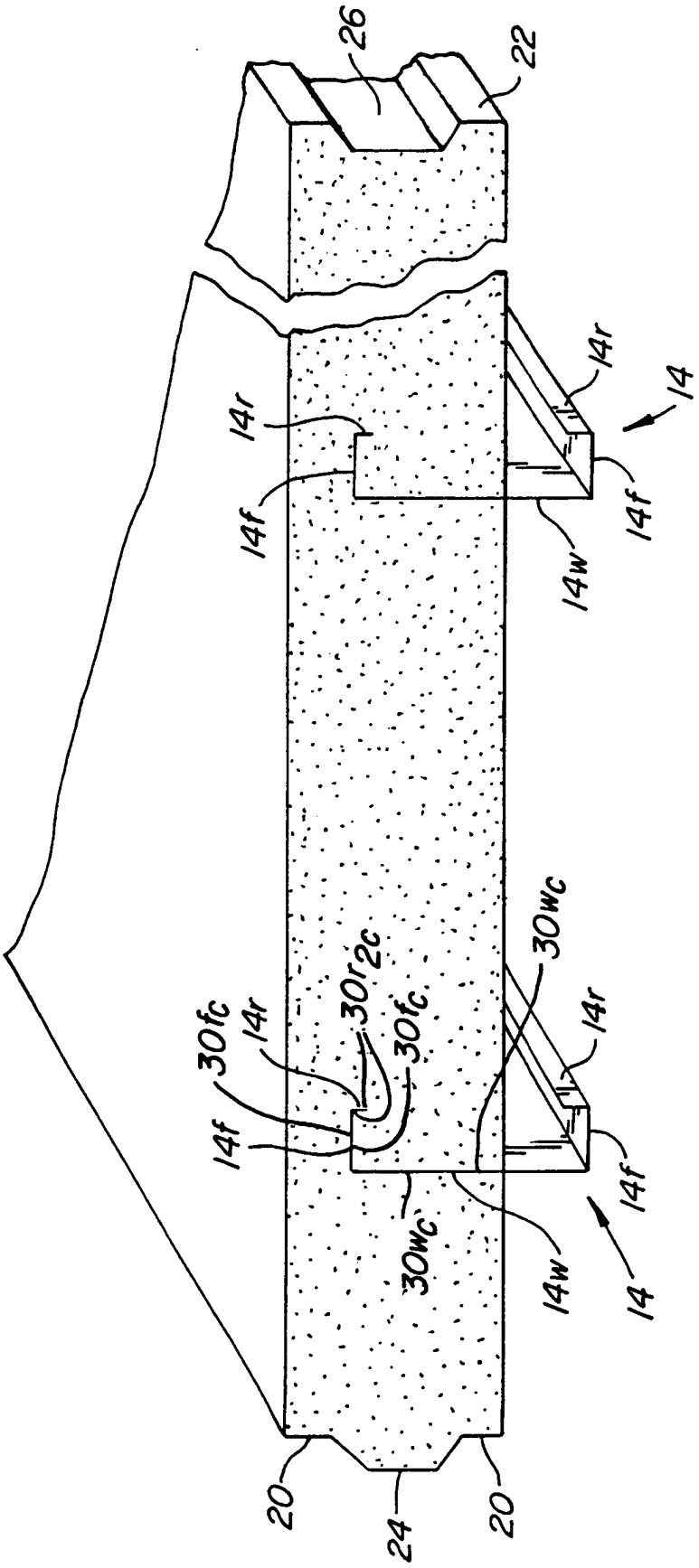
26
22
14r
14
14r
14f
14f
14w
30wc
30r2c
30fc
14r
30fc
14f
14r
14f
30wc
14w
14
20
24
20

FIG. 33.

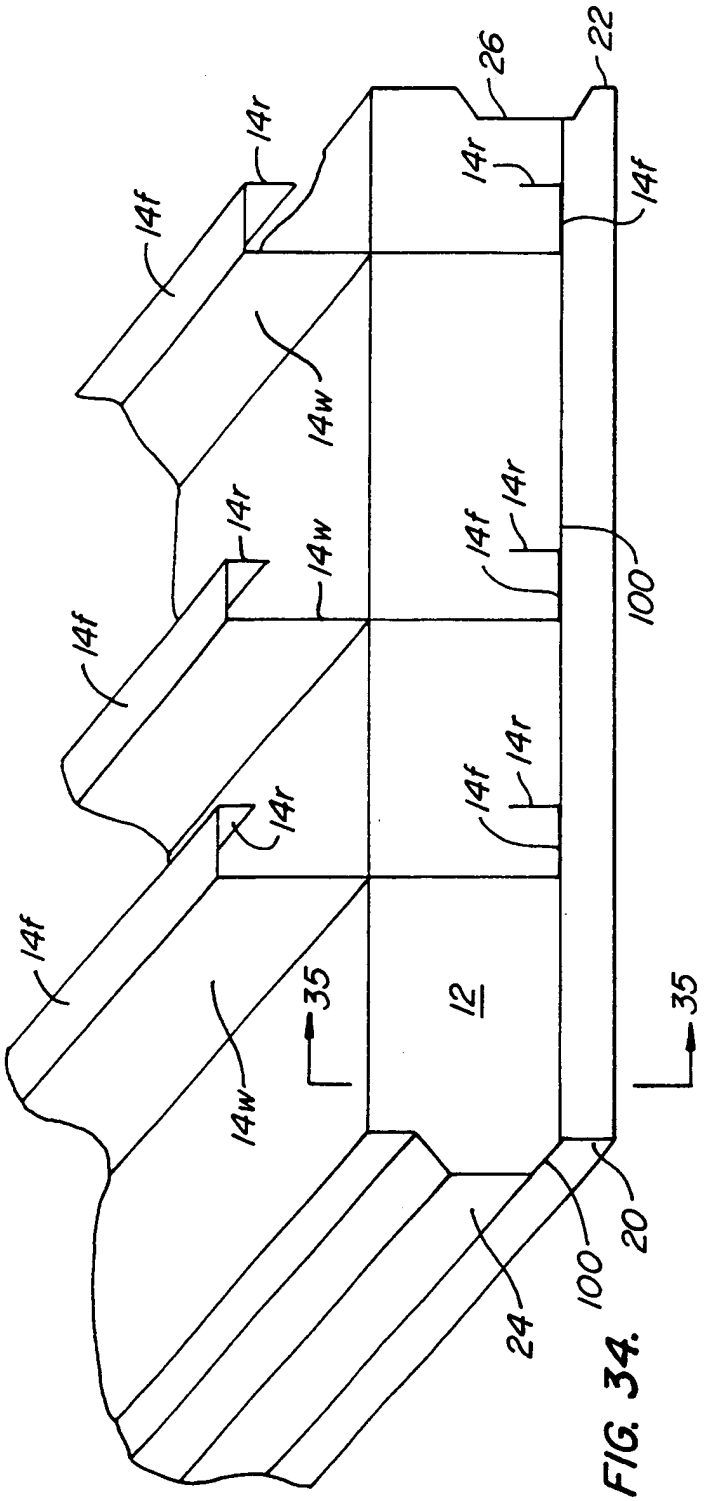

FIG. 34.

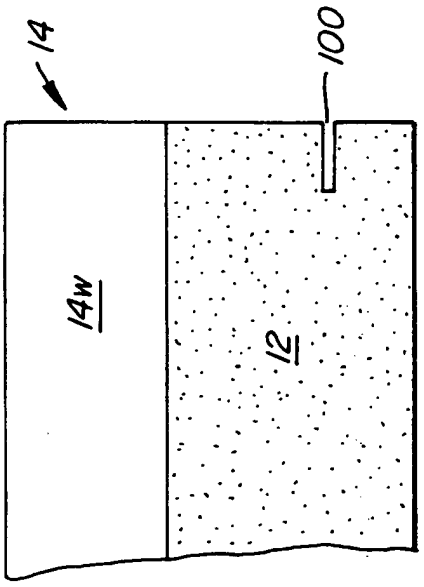

FIG. 35.

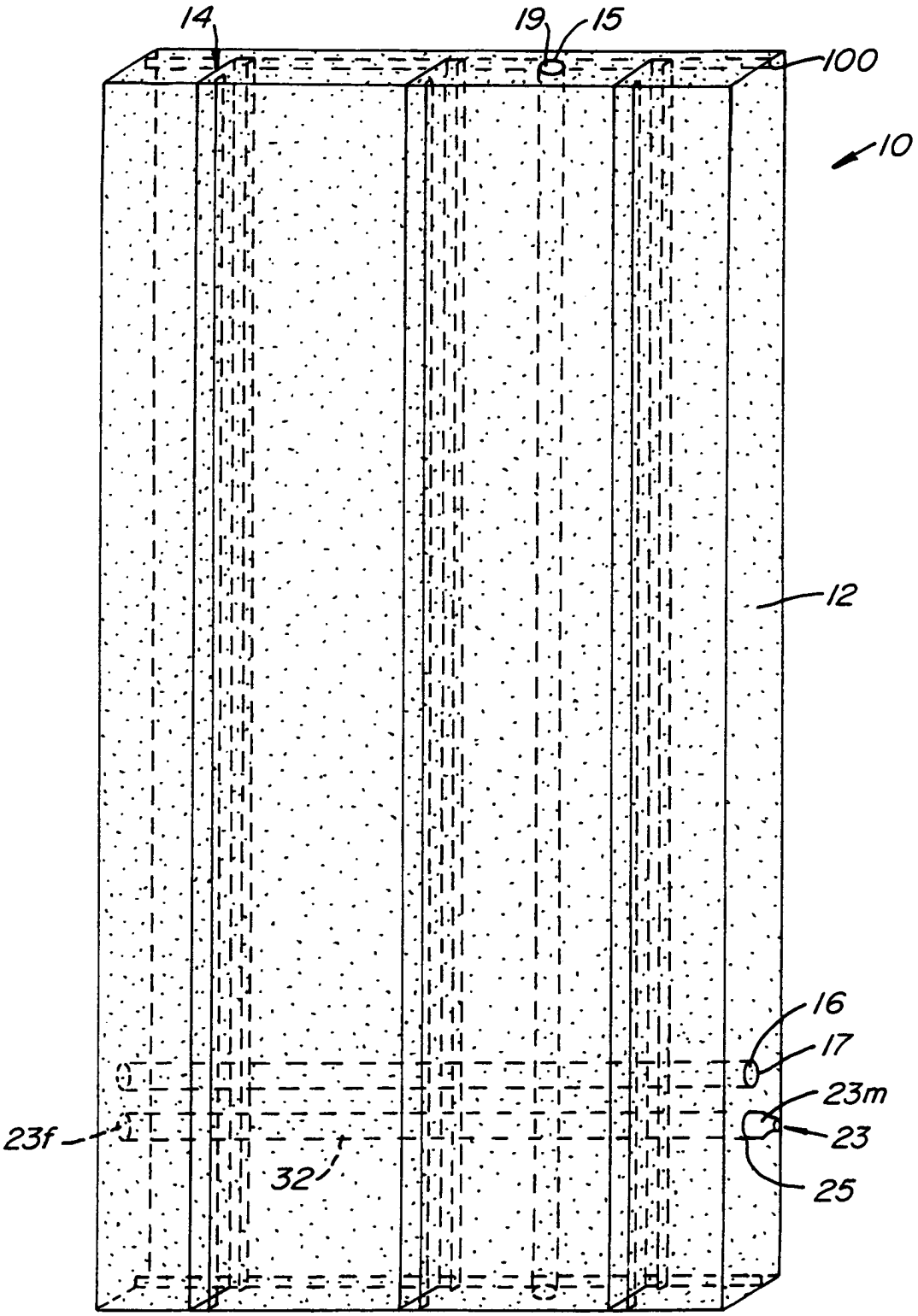

FIG. 36.

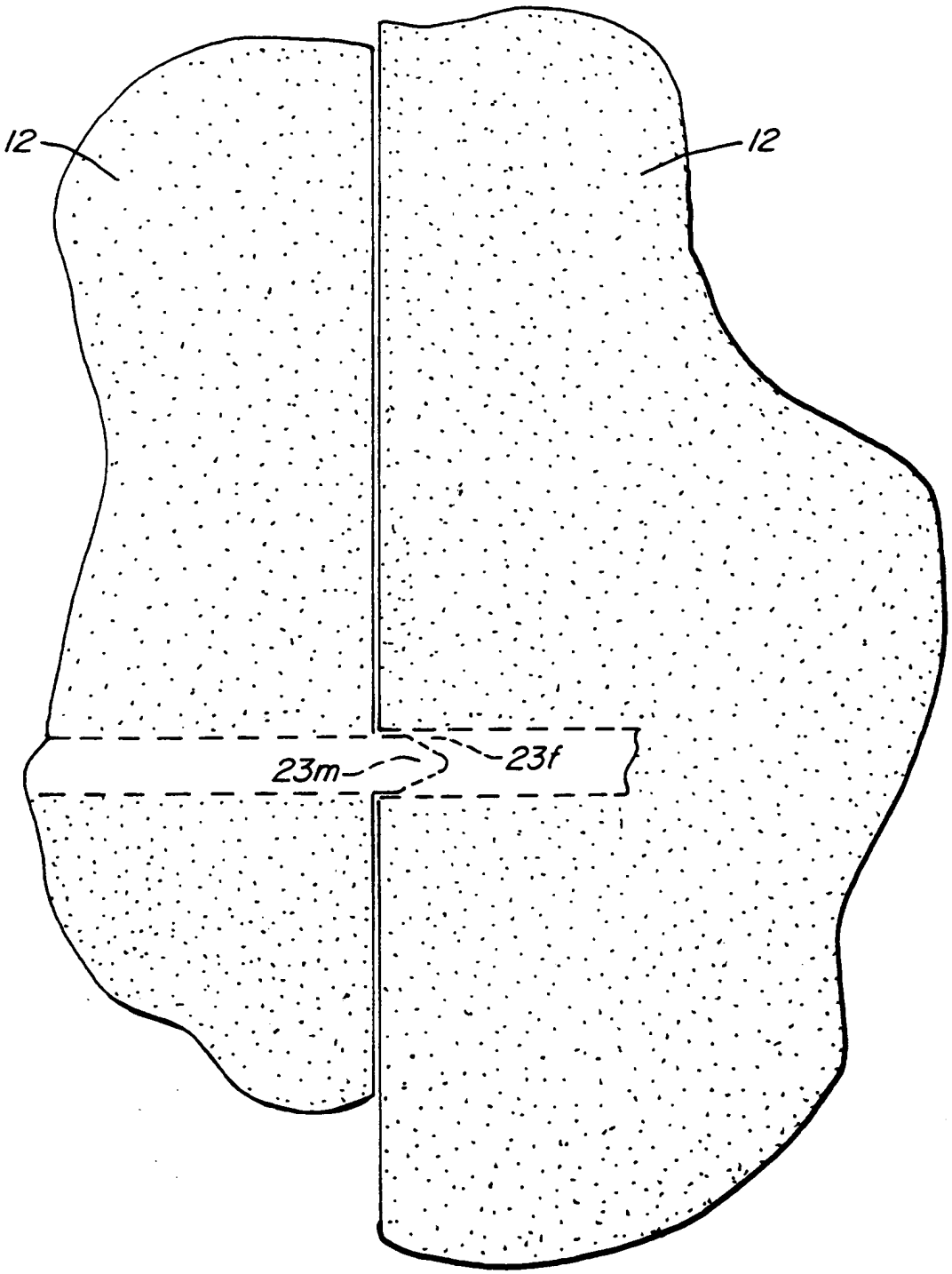

FIG. 37.

SYNTHETIC PANEL AND METHOD

This is a continuation patent application of patent application having Ser. No. 09/322,268, filed May 28, 1999 now abandoned. Patent application Ser. No. 09/322,268 was a continuation patent application of patent application having Ser. No. 09/003,747, filed Jan. 7, 1998, now U.S. Pat. No. 5,943,775. Patent application having Ser. No. 09/003,747 was a continuation-in-part of patent application having Ser. No. 08/556,265, filed Nov. 13, 1995, now U.S. Pat. No. 5,842,276. Benefit of all earlier filing dates is hereby claimed with respect to all common subject matter.

This is a continuation-in-part patent application of copending patent application having Ser No. 08/556,265, filed on Nov. 13, 1995, and entitled "A SYNTHETIC PANEL AND METHOD."

BACKGROUND OF THE INVENTION

1. Field of the Invention

This invention relates to a synthetic panel. More specifically, this invention provides a polymeric foamed panel (e.g. a low density synthetic panel) and method for producing the polymeric foamed panel. This invention further provides a method for forming a structure with two or more polymeric foamed panels.

2. Description of the Prior Art

A patentability investigation was conducted and the following U.S. Patents were discovered:

U.S. Pat. No. 4,163,349 to Smith; U.S. Pat. No. 4,284,447 to Dickens et al.; U.S. Pat. No. 4,602,466 to Larson; U.S. Pat. No. 4,774,794 to Grieb; U.S. Pat. No. 4,813,193 to Altizer; U.S. Pat. No. 4,856,244 to Clapp; U.S. Pat. No. 4,862,660 to Raymond; U.S. Pat. No. 4,981,003 to McCarthy; U.S. Pat. No. 5,021,108 to Bergqvist; U.S. Pat. No. 5,245,809 to Harrington; U.S. Pat. No. 5,265,389 to Mazzone et al.; U.S. Pat. No. 5,269,109 to Gulur; and U.S. Pat. No. 5,279,089 to Gulur.

U.S. Pat. No. 4,163,349 to Smith teaches an insulated building panel having a core and overlapping skins which include an interior skin and an exterior skin. The interior skin at the panel's bottom covers a panel foot plate and the exterior skin at the panel's bottom also covers the panel foot plate and extends beyond to form an erection stop. End panels have relieved core areas for receiving bearing members associated with a wall splice bearing post, and double parallel spaced header beams have an offset splice area within a several panel wall section.

U.S. Pat. No. 4,284,447 to Dickens et al. teaches a method of forming a panel structure useful in building construction and the like including the steps of heating a heat expandable plastic in a separable mold having a cavity with the configuration of the resultant panel to form a panel core and adhering thin reinforcing strips to the front and back surfaces of the core. Control over the dimensions and configuration of the panel to Dickens et al. is obtained by adhering the strips to the core in the mold while applying heat thereto whereby core shrinkage is minimized.

U.S. Pat. No. 4,602,466 to Larson teaches a method and apparatus for making building panels, including a means for positioning upper and lower rigid sheets of material, such as paper pulp, in spaced relation so that foamable material disposed between the sheets can move into gripping engagement with both sheets as it expands and solidifies.

U.S. Pat. No. 4,774,794 to Grieb teaches a foam-cement building having the walls, roof and/or floor formed from a

plurality of self supporting foam building blocks of varying density with a strong thin continuous structural and architectural coating on the surface of the blocks. The coating is formed from cement, reinforced with a fiberglass mesh and fiberglass roving strands. The blocks are interconnected by a mechanical key system or splines to form a monolithic structure.

U.S. Pat. No. 4,813,193 to Altizer teaches an improved modular building comprising sidewall modules and ceiling modules. The sidewall modules comprise a primary frame to which a secondary frame of furring strips is attached. The sidewall modules further comprise foam insulation molded around the primary and secondary frame to define exterior and interior planar surfaces. The ceiling modules include frame means supporting a plurality of ceiling joists, and foam insulation dispersed within the frame means and between the ceiling joist so as to define upper and lower ceiling surfaces.

U.S. Pat. No. 4,856,244 to Clapp teaches tilt-wall concrete panels adapted for constructing small buildings with "finished" interiors, especially single-family residences, etc. A peripheral frame of wooden members is laid on top of a barrier film of plastic (e.g. 4 mil polyethylene) on a horizontal surface. Wood-like studs are then placed within the frame and nailed thereto. Any desired utility cables and service pipes are positioned within the frame. Clapp further teaches that an insulating foam cover, preferably high-density polyurethane, is then generated within and over the frame, to a depth that at least covers the wood-like studs and any utility or service lines. Foam having a thickness of about 1.5 inches covers these elements and bonds them securely together as a stable, easily movable "plate" after the foam plastic has hardened. A plurality of such plates, each sized to form a part of a building's wall, are positioned at a construction site where a foundation has been prepared. Clapp discloses that a concrete form is then temporarily completed around each plate, and concrete is poured on top thereof, to an average depth of about 4 to 6 inches. After the concrete hardens, the temporary form is removed and the composite panel is tilted to a vertical position. A plurality of such panels by Clapp are positioned edge-to-edge and joined to form a continuous outer wall for the building. The plastic barrier film is removed from the face of each panel, and interior wallboards or the like may be nailed to the exposed wood-like studs.

U.S. Pat. No. 4,862,660 to Raymond teaches an integral energy efficient load-bearing exterior wall fabricated of lightweight foam surrounding plastic load-bearing columns. Raymond discloses prefabricated modular wall panels as individual building elements and as part of an integrated building system. The prefabricated modular wall panels are made from a foamed material that is molded around a plurality of vertically disposed hollow support columns. Each of the columns in U.S. Pat. No. 4,862,660 to Raymond is taught as containing a pair of opposed and vertically disposed T-shaped fastening supports which are arranged to form part of the interior and exterior surfaces of the foamed wall. The hollow columns are set onto locking base plates which are mounted on a wood or concrete deck system. Locking top plates are also mounted on wood and are then placed on top of the columns. The tubular columns are made of a plastic material and are shaped in cross-section in the form of a rectangle, square, diamond, oval or circle.

U.S. Pat. No. 4,981,003 to McCarthy teaches a wall panel constructed from expanded polystyrene beads in an expanded polystyrene mold with structural members embedded in it during the molding process. The structural members

are in the form of two by four studs placed at sixteen inch centers. Adjacent panels have interlocking grooves and ridges which fit together. McCarthy teaches that an advantage of his invention is that a total insulated wall is created with no cracks or spaces in the insulation.

U.S. Pat. No. 5,021,108 to Bergqvist teaches an apparatus for manufacture of laminated panels having a foamed plastic core material including an inclined press having a fixed platen surface and a movable platen surface hinged adjacent to its lower edge. Panel thickness is adjustable by a mechanism which moves the hinge pivot relative to fixed platen surfaces. The platen surfaces in U.S. Pat. No. 5,021,108 to Bergqvist are clamped at their upper edges by spaced clamps operable by lever and crank assemblies. A retractable seal spacer has liquid plastic injection nozzles and gas venting tubes in fluid communication with a hollow cavity in the press.

U.S. Pat. No. 5,245,809 to Harrington teaches a panel for providing walls, roofs and floors with thermal insulation and fire retardance. The panel is taught to comprise at least two essentially parallel face members separated to form a space between the face members and urethane within the space to provide the thermal insulation and fire retardance. The panel may additionally include frame members extending between the face members for providing support and for enclosing the urethane. At least one of the frame members has at least one port through which urethane foam can enter between the face members. U.S. Pat. No. 5,245,809 to Harrington further teaches a method for creating a panel for providing insulated and fire retardant walls, floors and roofs. The method is taught by Harrington to include the steps of joining frame members together to form a panel frame of the desired dimensions, attaching face members to either side of the panel frame so that at least one enclosed space is formed within the face members and frame members, creating at least one port leading into the at least one enclosed space, and injecting urethane foam through the at least one port into the at least one enclosed space.

U.S. Pat. No. 5,265,389 to Mazzone et al. teaches a composite building panel including a core of a foamed polymeric insulating material, such as expanded polystyrene, having a plurality of uniformly spaced open box tubes retained in vertical grooves formed in the rear surface of the core by a two-part epoxy adhesive. The tubes are mechanically connected at their ends to one leg of continuous horizontal channels having their other leg adhesively secured to the core at horizontal slots. The front surface of the core is continuous without seams and may be coated with a variety of exterior insulation finishing system coatings.

U.S. Pat. Nos. 5,269,109 and 5,279,089 to Gulur teach an insulated load bearing wall comprising panels of extruded polymer foam into which tubular, load carrying frame members have been incorporated. A tongue is formed at one vertical edge of each panel and a groove is formed at the opposite vertical edge. The tubular frame members are bonded to the extruded polymer foam.

None of the foregoing U.S. Patents teach the particular methods of the present inventions for producing panels having a core of a foamed polymeric material, such as expanded polystyrene. StressSkin and Structural Panels have been in use for several decades. Alden Dow constructed his first StressSkin panel house in the late forties. Both technologies have relied on an inner and outer skin of wood either being plywood or more recently OSB (oriented strand board). The plywood or OSB skin is attached to the foam core with an adhesive and then pressed together. The laminated panels are thereafter processed into engineered parts. The plywood or OSB skin does not provide for both a structure and a substrate for the interior and exterior finishes. Thus, what is needed and what has been invented by us is a foamed wall system and method that provides for a foamed polymeric material that becomes both a structure and a substrate for the interior and exterior finishes.

SUMMARY OF THE INVENTION

The present invention accomplishes its desired objects by providing a method for producing a polymeric foamed material panel (e.g. a low density synthetic panel) comprising the steps of:

(a) providing a polymeric foamed material;

(b) cutting the polymeric foamed material of step (a) until reaching a preconfiguration cut point;

(c) cutting subsequently from the preconfiguration cut point a brace-receiving configuration in the polymeric foamed material; and

(d) sliding a brace member into the brace-receiving configuration to produce a polymeric foamed material panel.

The cutting in step (b) and the cutting in step (c) comprises cutting the polymeric foamed material of step (a) with a hot wire cutter which is preferably operated by a computer. The brace-receiving configuration in the polymeric foamed material comprises a slot for receiving the brace member. The slot includes a seared wall for facilitating the sliding of the brace member. The brace member includes an opening with an opening perimeter. The method additionally comprises forming a polymeric foamed material opening in the polymeric foamed material. The polymeric foamed material opening has a polymeric foamed material opening perimeter. The sliding in step (d) comprises sliding the brace member into the brace-receiving configuration until the opening of the brace member is generally aligned with the polymeric foamed material opening. The opening perimeter of the opening in the brace member has a dimension that is greater than a dimension of the polymeric foamed material opening perimeter of the polymeric foamed material opening in the polymeric foamed material.

The method preferably additionally comprises passing a conduit through the polymeric foamed material opening of the polymeric foamed material and through the opening of the brace member; preferably such that the conduit is essentially supported by the polymeric foamed material and essentially does not contact any of the opening perimeter of the opening in the brace member. The cutting in step (b) further comprises cutting a generally straight thread-like slot from a defined surface of the polymeric foamed material to the preconfiguration cut point. The brace-receiving configuration is essentially a generally C-shaped slot. The method further preferably includes that the cutting in step (b) and the cutting in step (c) is with a hot wire cutter wherein the hot wire cutter is at a temperature (e.g. 230° F. to 580° F.) such as to sear at least one wall of the C-shaped slot to smooth and harden the wall of the C-shaped slot for facilitating the sliding in step (d) of the brace member. The polymeric foamed material may be any suitable material (i.e. either low density and/or high density including engineered resins) that is capable of producing the panel or structure of the present invention, such as expanded polystyrene (EPS).

The present invention further accomplishes its desired objects by providing a method for forming a structure comprising the steps of:

(a) providing a first polymeric foamed material having a first defined edge;

(b) cutting the first polymeric foamed material until receiving a first preconfiguration cut point and cutting subsequently from the first preconfiguration cut points a first brace-receiving-configured slot in the first polymeric foamed material;

(c) cutting the first defined edge of the first polymeric foamed material to form a tongue on the first defined edge;

(d) sliding a first brace member into the first brace-receiving-configured slot;

(e) providing a second polymeric foamed material having a second defined edge;

(f) cutting the second polymeric foamed material until reaching a second preconfiguration cut point and cutting subsequently from the second preconfiguration cut point a second brace-receiving-configured slot in the second polymeric foamed material;

(g) cutting the second defined edge of the second polymeric foamed material to form a channel in the second defined edge;

(h) sliding a second brace member into the second brace-receiving-configured slot; and

(i) sliding the tongue on the first defined edge of the first polymeric foamed material into the channel in the second defined edge of the second polymeric foamed material to form a structure.

The cutting in steps (b), (c), (f) and (g) comprises cutting with a hot wire cutter; preferably a computer operated hot wire cutter. The first brace-receiving-configured slot in the first polymeric foamed material and the second brace-receiving-configured slot in the second polymeric foamed material respectively comprise a first slot with a first wall for receiving the first brace member and a second slot with a second wall for receiving the second brace member. The first wall of the first slot includes a first seared wall for facilitating the sliding of the first brace member and the second wall of the second slot includes a second seared wall for facilitating the sliding of the second brace member. The first brace member includes a first opening with a first opening perimeter and the second brace member includes a second opening with a second opening perimeter.

The method additionally includes forming a first polymeric foamed material opening in the first polymeric foamed material and forming a second polymeric foamed material opening in the second polymeric foamed material. The first polymeric foamed material opening includes a first polymeric foamed material opening perimeter and the second polymeric foamed material opening includes a second polymeric foamed material opening perimeter. The sliding step (d) comprises sliding the first brace member into the first brace-receiving-configured slot until the first opening of the first brace member is generally aligned with the first polymeric foamed materials opening; and the sliding step (h) comprises sliding the second brace member into the second brace-receiving-configured slot until the second opening of the second brace member is generally aligned with the second polymeric foamed material opening. The first and second openings of the first and second brace members and the first and second polymeric foamed material openings of the first and second polymeric foamed materials are all aligned for receiving a conduit. The first opening perimeter of the first opening in the first brace member has a first dimension that is greater than a first dimension of the first polymeric foamed material opening perimeter of the first polymeric foamed material opening in the first polymeric foamed material; and the second opening perimeter of the second opening in the second-brace member has a second dimension that is greater than a second dimension of the second polymeric foamed material opening perimeter of the second polymeric foamed material opening in the second polymeric foamed material.

The method preferably additionally comprises passing a conduit through the first polymeric foamed material opening in the first polymeric foamed material and through the first opening of the first brace member and further passing the conduit through the second polymeric foamed material opening in the second polymeric material and through the second opening of the second brace member; preferably such that the conduit is essentially supported by the first polymeric foamed material and by the second polymeric material and essentially does not contact any of the first opening perimeter of the first opening in the first brace member and any of the second opening perimeter of the second opening in the second brace member.

The method also preferably additionally comprises cutting, prior to the cutting in step (b), a first generally straight thread-like slot in the first polymeric foamed material up to a first preconfiguration cut point wherein the step (b) cutting commences; and further also preferably additionally comprises cutting, prior to the cutting in step (f), a second generally straight thread-like slot in the second polymeric foamed material up to a second preconfiguration cut point wherein the step (f) cutting commences. The first brace-receiving-configured slot is essentially a first generally C-shaped slot and the second brace-receiving-configured slot is essentially a second generally C-shaped slot. The cutting in step (b), step (c), step (f), and step (g) comprises cutting with a hot wire cutter which is at a temperature (e.g. 230° F. to 580° F.) such as to sear at least one wall of the first C-shaped slot and to sear at least one wall of the second C-shaped slot to smooth and harden the wall of the first C-shaped slot and to smooth and harden the wall of the second C-shaped slot for facilitating the sliding in step (d) of the first brace member and for facilitating the sliding in step (h) of the second brace member. The first polymeric foamed material and the second polymeric foamed material both may consist of any suitable material (e.g. any suitable polymeric foamed material) such as that comprising expanded polystyrene (EPS).

The present invention therefore provides a method for producing a polymeric foamed material panel comprising the steps of:

(a) providing a polymeric foamed material in a generally stationary position;

(b) cutting the generally stationary polymeric foamed material of step (a) until reaching a preconfiguration cut point;

(c) cutting subsequently from the preconfiguration cut point a brace-receiving configuration in the generally stationary polymeric foamed material; and

(d) sliding a brace member into the brace-receiving configuration to produce a polymeric foamed material panel.

The present invention further therefore provides a method for producing a polymeric foamed material panel comprising the steps of:

(a) providing a polymeric foamed material;

(b) providing a brace member with brace sides;

(c) cutting a brace-receiving configuration in the polymeric foamed material; and

(d) sliding the brace member of step (b) into the brace-receiving configuration such that the brace sides are essentially surrounded by the polymeric foamed material to produce a polymeric foamed material panel.

The present invention also further therefore provides a method for producing a polymeric foamed material panel comprising the steps of:

(a) providing a polymeric foamed material with a planar side surface;

(b) cutting with a cutter from the planar side surface a path in the polymeric foamed material of step (a);

(c) retracing the path of step (b) with the cutter to produce a brace-receiving configuration in the polymeric foamed material; and

(d) sliding a brace member into the brace-receiving configuration to produce a polymeric foamed material panel.

The present invention yet also further therefore provides a method for producing a polymeric foamed material panel comprising the steps of:

(a) providing a polymeric foamed material with a planar side surface;

(b) contacting the planar side surface with a cutter;

(c) cutting with the cutter the polymeric foamed material from the planar side surface thereof until reaching a preconfiguration cut point within the polymeric foamed material;

(d) cutting with the cutter from the preconfiguration cut point of step (c) a slot in the polymeric foamed material of step (c);

(e) cleaning the slot of step (d) with the cutter to produce a brace-receiving configuration in the polymeric foamed material; and

(f) sliding a brace member into the brace-receiving configuration to produce a polymeric foamed material panel.

In addition to the foregoing methods, the present invention provides at least one polymeric foamed material panel. The polymeric foamed material panel of the present invention comprises a panel consisting of a polymeric foamed material. A brace-receiving-configured slot is disposed in the polymeric foamed material of the panel and a brace member is disposed in the brace-receiving-configured slot in the polymeric foamed material of the panel. The brace-receiving-configured slot preferably includes at least one seared wall; and the polymeric foamed material panel additionally comprises a generally straight thread-like slot extending from a defined surface of the polymeric foamed material to the brace-receiving-configured slot; and a second generally straight thread-like slot extending from the defined surface of the polymeric foamed material to a generally cylindrical opening in the polymeric foamed material. The brace member has a brace opening which is generally aligned with the cylindrical opening in polymeric foamed material.

In another embodiment of the present invention there is provided a method for forming a structure comprising the steps of:

(a) providing a first polymeric foamed material having a first defined edge;

(b) cutting (e.g. with a hot wire cutter or a laser cutter) a first slot in the first polymeric foamed material;

(c) providing a first internal reinforcing member having a male member;

(d) sliding the first internal reinforcing member of step (c) into the first slot of step (b) such that the male member protrudes from the first defined edge;

(e) providing a second polymeric foamed material having a second defined edge;

(f) cutting (e.g. with a hot wire cutter or a laser cutter) a second slot in the second polymeric foamed material;

(g) providing a second internal reinforcing member having a female member;

(h) sliding the second internal reinforcing member of step (g) into the second slot of step (f) such that the female member is exposed along the second defined edge; and

(i) sliding the male member, which projects from the first defined edge of the first polymeric foamed material, into the female member, which is exposed along the second defined edge of the second polymeric foamed material, to form a structure.

In yet another embodiment of the present invention, there is provided a method for producing a plurality of polymeric foamed material structures having brace-receiving configurations comprising the steps of:

(a) providing a block, preferably a generally stationary block, of polymeric foamed material, such as expanded polystyrene (EPS);

(b) cutting the polymeric foamed material of step (a) with a plurality of cutters (e.g., hot wire cutters, laser cutters, etc.) until each cutter reaches a respective preconfiguration cut point;

(c) cutting subsequently with each cutter from the respective preconfiguration cut point of each cutter a respective brace-receiving configuration in the polymeric foamed material; and

(d) cutting, after the cutting step (c), the polymeric foamed material of step (c) with the plurality of cutters to produce a plurality of polymeric foamed material structures, each of the polymeric foamed material structures having a brace-receiving configuration, which may be linear or nonlinear.

The immediate foregoing method additionally comprises cutting with each cutter, prior to the cutting step (d), a respective polymeric foamed material opening in the polymeric foamed material such that each polymeric foamed material structure has a polymeric foamed material opening to define a chase. The cutters are preferably computer operated to provide desired cut accuracy.

In yet another embodiment of the present invention, there is also provided a method for producing a plurality of polymeric foamed material panels comprising the steps of:

(a) providing a block (e.g., a generally stationary block) of polymeric foamed material (e.g., expanded polystyrene (EPS));

(b) cutting the polymeric foamed material of step (a) with a plurality of cutters (e.g., hot wire cutters, laser cutter, etc.) until each cutter reaches a respective preconfiguration cut point;

(c) cutting subsequently with each cutter from the respective preconfiguration cut point of each cutter a respective brace-receiving slot in the polymeric foamed material;

(d) cutting, after the cutting step (c), the polymeric foamed material of step (c) with said plurality of cutters to produce a plurality of polymeric foamed material structures having a plurality of brace-receiving slots, which may be linear or nonlinear slots; and

(e) sliding a plurality of brace members into the brace-receiving slots of the polymeric foamed material structures of step (d) to produce a plurality of polymeric foamed material panels, each of the polymeric foamed material panels having at least one of the brace members.

In the immediate foregoing method of the present invention, the brace members include sides. More particularly, each of the brace members preferably comprises a web, a first flange integrally bound to the web, a first flange return integrally bound to the first flange, a second flange also integrally bound to the web, and a second flange return integrally bound to the second flange. The web, the first and second flanges, and the first and second flange returns are surrounded by the polymeric foamed materials. Alternatively and as another embodiment of the present invention, a portion of at least one brace member protrudes from each of the polymeric foamed material panels. Therefore, the sliding step (e) in the immediate foregoing method more specifically comprises sliding the first flange and the first flange return and a portion of the web of respective brace members into respective brace-receiving slots of the polymeric foamed material structures to produce the plurality of polymeric foamed material panels, with each of the polymeric foamed material panels having the second flange and the second flange return and a portion of the web of at least one of the brace members disposed outside thereof.

An alternative embodiment of the present invention further also provides a method for producing a plurality of polymeric foamed material structures having slots for receiving stud members comprising the steps of:

(a) cutting a polymeric foamed material (e.g., a generally stationary block of expanded polystyrene (EPS)) with a plurality of cutters, such as hot wire cutters or laser cutters, in a first direction;

(b) cutting subsequently in a second direction the polymeric foamed material of step (a) with the plurality of cutters until each cutter forms a first respective slot in the polymeric foamed material;

(c) cutting, after the cutting step (b), in the first direction the polymeric foamed material of step (b) with the plurality of cutters to produce a plurality of polymeric foamed material structures having a plurality of first slots, which may be linear or nonlinear slots.

The immediately foregoing method broadly additionally comprises cutting, prior to the cutting step (c), the polymeric foamed material of step (b) with the plurality of cutters until each cutter forms a second respective slot in the polymeric foamed material. The immediate foregoing method more particularly additionally comprises cutting, prior to the cutting step (c), the polymeric foamed material of step (b) with the plurality of cutters until each cutter forms a respective recess in the polymeric foamed material; and subsequently cutting, prior to the cutting step (c), the polymeric foamed material with the plurality of cutters until each cutter forms a second respective slot in the polymeric foamed material such that after the cutting step (c), a plurality of polymeric foamed material structures are produced having a plurality of first slots and a plurality of second slots and a plurality of recesses. A plurality of stud members is provided wherein each of the stud members comprises a web, a first flange integrally bound to the web, a first flange return integrally bound to the first flange, a second flange also integrally bound to the web, and a second flange return integrally bound to the second flange. The stud members are slid into the first and second slots and into the recesses of the polymeric foamed material structures, such that after the sliding step, the first flange return and the first flange of each of the stud members occupies respectively one of the first slots and one of the recesses of the polymeric foamed material structures, and the web, the second flange and the second flange return of each of the stud members occupies one of the second slots of the polymeric foamed material structures. The cutters are preferably computer operated to provide the desired cut accuracy during the cutting steps.

The alternative embodiment of the present invention more specifically includes a method for producing a plurality of polymeric foamed material structures having slots for receiving stud members comprising the steps of:

(a) cutting a polymeric foamed material with a plurality of cutters in a first direction until each of the cutters has moved a respective first distance in the polymeric foamed material;

(b) cutting subsequently with the plurality of cutters in a second direction the polymeric foamed material of step (a) until each of the cutters has moved a respective second distance in the polymeric foamed material of step (a);

(c) cutting subsequently with the plurality of cutters in the first direction the polymeric foamed material of step (b) until each of the cutters has moved a respective third distance in the polymeric foamed material of step (b);

(d) cutting subsequently with the plurality of cutters in a third direction the polymeric foamed material of step (c) until each of the cutters has moved a respective fourth distance in the polymeric foamed material of step (c);

(e) cutting subsequently with the plurality of cutters in the first direction the polymeric foamed material of step (d) until each of the cutters has moved a respective fifth distance in the polymeric foamed material of step (d);

(f) cutting subsequently with the plurality of cutters in the second direction the polymeric foamed material of step (e) until each of the cutters has moved a respective sixth distance in the polymeric foamed material of step (e);

(g) cutting subsequently with the plurality of cutters in a fourth direction the polymeric foamed material of step (f) until each of the cutters has moved a respective seventh distance in the polymeric foamed material of step (f);

(h) cutting subsequently with the plurality of cutters in the third direction the polymeric foamed material of step (g) until each of the cutters has moved a respective eighth distance in the polymeric foamed material of step (g);

(i) cutting subsequently with the plurality of cutters in the fourth direction the polymeric foamed material of step (h) until each of the cutters has moved a respective ninth distance in the polymeric foamed material of step (h);

(j) cutting subsequently with the plurality of cutters in the second direction the polymeric foamed material of step (i) until each of the cutters has moved a respective tenth distance in the polymeric foamed material of step (i);

(k) cutting subsequently with the plurality of cutters in the first direction the polymeric foamed material of step (j) until each of the cutters has moved a respective eleventh distance in the polymeric foamed material of step (j);

(l) cutting subsequently with the plurality of cutters in the third direction the polymeric foamed material of step (k) until each of the cutters has moved a respective twelfth distance in the polymeric foamed material of step (k); and

(m) cutting, after the cutting step (l), in the first direction the polymeric foamed material of step (l) with the plurality of cutters to produce a plurality of polymeric foamed material structures having a plurality of slots.

In the immediate foregoing method, the respective third distance and the respective eighth distance are approximately equal. Similarly, the respective fifth distance and the respective seventh distance are approximately equal. The respective fourth distance is generally less than the respective second distance, and the respective eighth distance is generally less than the respective tenth distance. The third direction is generally opposite to the second direction, and the fourth direction is generally opposite to the first direction. The cutters are preferably computer operated hot wire cutters which generally move in unison. Each of the hot wire cutters includes a wire diameter with a generally known diameter measurement which generally equals the respective third distance and the respective eighth distance.

One of the alternative embodiments of the present invention also more specifically includes a method for producing a plurality of polymeric foamed material structures comprising the steps of:

(a) cutting a polymeric foamed material (e.g., a generally stationary block of expanded polystyrene (EPS)) with a plurality of cutters (e.g., computer-operated hot wire cutters or laser cutters) until each cutter reaches a respective first cut point;

(b) cutting subsequently with each cutter from the respective first cut point a respective path in the polymeric foamed material of step (a) until each cutter reaches a respective second cut point;

(c) moving each of the plurality of cutters from the respective second cut point to a respective off-set position in the polymeric foamed material of step (b);

(d) retracing generally with each cutter the respective path of each cutter, while each cutter remains in the respective off-set position of step (c) such that a respective slot is formed by each cutter in the polymeric foamed material of step (c); and

(e) cutting the polymeric foamed material of step (d) with the plurality of cutters until the cutters have cut through the polymeric foamed material of step (d), producing a plurality of polymeric foamed material structures having slots, which may be either linear or non-linear slots. The method additionally comprises cutting with the plurality of cutters track chases in the polymeric foamed material structures of step (e) such that each of the plurality of polymeric foamed material structures additionally includes a track chase.

Other features of the alternative embodiments of the present invention include interrupting the movement of a plurality of cutters in a first direction of travel to move the cutters in at least one direction of travel which differs from the first direction of travel in order to form one or more brace-receiving slots. These features are embodied in a method for producing a plurality of polymeric foamed material structures having brace-receiving slots comprising the steps of: (a) providing a block of polymeric foamed material; and (b) moving a plurality of cutters through the block of polymeric foamed material in a first direction of travel, while interrupting at least one time the moving of the plurality of cutters in the first direction of travel to move the cutters through the block of polymeric foamed material in at least one direction of travel which differs from the first direction of travel, such that each cutter produces a respective brace-receiving slot in the polymeric foamed material, until the plurality of cutters have moved completely through the block of polymeric foamed material to produce a plurality of polymeric foamed material structures with each structure having at least one brace-receiving slot. These features are also embodied in a method for producing a plurality of polymeric foamed material structures having brace-receiving slots comprising the steps of: (a) providing a block of polymeric foamed material in a generally stationary position; (b) moving a plurality of cutters through the generally stationary block of polymeric foamed material of step (a) in a first direction of travel; (c) interrupting the movement of the plurality of cutters from the first direction of travel through the generally stationary block of polymeric foamed material to move the cutters in at least one direction of travel which differs from the first direction of travel such that each cutter produces a respective brace-receiving slot in the polymeric foamed material, and (d) continuing the moving step (b) of the plurality of cutters in the first direction of travel, while intermittently interrupting the movement of the plurality of cutters from the first direction of travel to move the cutters in at least one direction of travel which differs from the first direction of travel such that each cutter produces at least one additional respective brace-receiving slot in the polymeric foamed material, until the plurality of cutters have moved completely through the generally stationary block of polymeric foamed material after which a plurality of polymeric foamed material structures are produced with each polymeric foamed material structure having a plurality of brace-receiving slots.

An alternative embodiment of the present invention therefore accomplishes its desired objects by broadly providing a method for producing a plurality of polymeric foamed material panels comprising the steps of:

(a) cutting a polymeric foamed material in a first direction with a plurality of cutters generally moving in unison;

(b) cutting subsequently the polymeric foamed material of step (a) in a second direction with the plurality of cutters generally moving in unison;

(c) cutting, after the cutting step (b), the polymeric foamed material of step (b) in the first direction with the plurality of cutters generally moving in unison;

(d) cutting, after the cutting step (c), the polymeric foamed material of step (c) in a third direction with the plurality of cutters generally moving in unison wherein the third direction is generally opposite to the second direction;

(e) cutting, after the cutting step (d), the polymeric foamed material of step (d) in the first direction with the plurality of cutters generally moving in unison until the cutters have cut through the polymeric foamed material of step (d) to produce a plurality of polymeric foamed material structures having brace-receiving configurations; and

(f) sliding brace members into the brace-receiving configurations of the polymeric foamed material structures of step (e) to produce a plurality of polymeric foamed material panels with each polymeric foamed material panel having one of the brace members.

An alternative embodiment of the present invention also accomplishes its desired objects by broadly providing a method for producing a polymeric foamed material structure having a slot comprising the steps of:

(a) cutting with a cutter a polymeric foamed material until reaching a preslot cut point;

(b) cutting subsequently a first path in the polymeric foamed material with the cutter from the preslot cut point until reaching a first cut point;

(c) moving the cutter in the polymeric foamed material of step (b) a predetermined distance from the first cut point to a second cut point; and

(d) cutting subsequently from the second cut point a second path in the polymeric foamed material of step (c) with the cutter until the cutter reaches a postslot cut point to produce a polymeric foamed material structure having a slot.

In the immediate foregoing method of the present invention, the cutter is preferably a computer-operated hot wire cutter having a wire diameter with a generally known diameter measurement, and the slot of step (d) has a width equal to about twice the generally known diameter measurement of the wire diameter, and a width equal to about twice the predetermined distance of step (c). A stud member may be slid into the slot of step (d).

An alternative embodiment of the present invention further also accomplishes its desired objects by broadly providing a method for producing at least one polymeric foamed material structure having at least one slot comprising the steps of:

(a) providing at least one cutter;

(b) cutting with the cutter of step (a) a polymeric foamed material until the cutter reaches at least one respective preslot cut point;

(c) cutting subsequently with cutter from the respective preslot cut point of step (b) at least one respective path in the polymeric foamed material of step (b) until the cutter reaches at least one first cut point;

(d) forming with the cutter in the polymeric foamed material of step (c) at least one respective offset path communicating with the respective path of step (c) to form at least one slot within the polymeric foamed material of step (c); and

(e) cutting subsequently the polymeric foamed material of step (d) with the cutter until the cutter has cut through the polymeric foamed material of step (d), producing at least one polymeric foamed structure having at least one slot.

In the immediate foregoing method for an improved embodiment of the present invention, the at least one respective path has at least one respective path length, and the at least one respective off-set path communicates with the at least one respective path along the at least one respective path length of the at least one respective path, such that the at least one respective path and the least one respective off-set path together form the at least one slot within the polymeric foamed material of step (c). Preferably, the at least one cutter comprises a plurality of computer-operated hot wire cutters cutting a plurality of respective paths in the polymeric foamed material of step (b) and forming a plurality of respective off-set paths in the polymeric foamed material of step (c), such that the plurality of respective paths and the plurality of respective off-set paths together form a plurality of respective slots in the polymeric foamed material of step (c), and such that, after the cutting step (e) with the plurality of hot wire cutters, a plurality of polymeric foamed structures are produced having a plurality of slots. A plurality of stud members are slid into the plurality of slots.

Another embodiment of the present invention provides method for producing a plurality of polymeric foamed material structures having seared surfaces for contacting brace members comprising the steps of:

a) providing a block of polymeric foamed material which is preferably stationary, having a side and a pair of opposed ends;

b) cutting the block of polymeric foamed material with a plurality of hot wire cutters, which is preferably computer-operate in a first direction generally perpendicular from the side of the block of polymeric foamed material;

c) cutting, immediately after said cutting step (b), the block of polymeric foamed material with the plurality of hot wire cutters in a second direction generally perpendicular from the first direction until each hot wire cutter forms in the polymeric foamed material a first respective cut seared surface terminating in the opposed ends of the block of polymeric foamed material;

d) cutting, immediately after said cutting step (c), the block of polymeric foamed material with the plurality of hot wire cutters in a third direction generally perpendicular from the second direction until each hot wire cutter form in the polymeric foamed material a second respective cut seared surface terminating in the opposed ends of the block of the polymeric foamed material;

e) cutting the block of polymeric foamed material with the plurality of hot wire cutters in a fourth direction until each hot wire cutter forms in the polymeric foamed material a third respective cut seared surface terminating in the opposed ends of the block of polymeric foamed material;

f) cutting the block of polymeric foamed material with the plurality of hot wire cutters in a fifth direction, which may be generally perpendicular from the fourth direction, until each hot wire cutter forms in the polymeric foamed material a fourth respective cut seared surface terminating in the opposed ends of the block of polymeric foamed material; and

g) cutting the block of polymeric foamed material with the plurality of hot wire cutters in a sixth direction, which may be generally perpendicular from the fifth direction, to produce a plurality of polymeric foamed material structures, each of the polymeric foamed material structures having a first cut seared surface and a second cut secured surface for contacting a first brace member and a third cut seared surface and a fourth cut seared surface for contacting a second brace member.

The immediate foregoing method may additionally comprise cutting the block of polymeric foamed material with the plurality of hot wire cutters between the cutting step (d) and the cutting step (e). Also, the method may additionally comprise cutting the block of polymeric foamed material with the plurality of hot wire cutters such the each of the polymeric foamed material structures has a tongue member and a channel member. The cutting step (f) may be before or after the cutting step (e).

Preferably, the cutting step (g) is after the cutting step (f). The cutting step (c) additionally produces an opposed first respective cut seared surface terminating in the opposed ends of the block of polymeric foamed material and opposed to the first respective cut seared surface to form a first slot in each of the polymeric foamed material structures; and the cutting step (d) additionally produces an opposed second respective cut seared surface terminating in the opposed ends of the block of polymeric foamed material and opposed to the second respective cut seared surface to form a second slot in each of the polymeric foamed material structures, each of the polymeric foamed material structures having the first slot and the second slot for receiving a first brace member, and the cutting step (e) additionally produces an opposed third respective cut scared surface terminating in the opposed ends of the block of polymeric foamed material and opposed to the third respective cut seared surface to form a third slot in each of the polymeric foamed material structures; and the cutting step (f) additionally producing an opposed fourth respective cut seared surface terminating in

the opposed ends of the block of polymeric foamed material and opposed the fourth respective cut seared surface to form a fourth slot in each of the polymeric foamed material structures, each of the polymeric foamed material structures having the third slot and the fourth slot for receiving a second brace member.

The immediate foregoing method more specifically additionally comprises forming a first flange-return slot, a second flange-return slot, a third flange-return slot, and a fourth flange-return slot in each of the polymeric foamed material structures. The method more specifically firer additionally comprises providing a plurality of first brace members wherein each of the first brace members comprises a first web, a first flange secured to the first web, a first flange return secured to the first flange, a second flange secured to the web, and a second flange return secured to said second flange; and additionally comprising providing a plurality of second brace members wherein each of the second brace members comprises a second web, a third flange secured to the second web, a third flange return secured to the third flange, a fourth flange secured to the second web, a fourth flange return secured to the fourth flange. The plurality of the first brace members and the plurality of the second brace members are preferably disposed in the plurality of polymeric foamed material structures such that each of the polymeric foamed material structures comprises the first web of the first brace member positioned against the first cut seared surface, the first flange positioned against the second cut secured surface, the first flange return positioned in the first flange-return slot, the second flange return positioned in the second flange-return slot, the second web of the second brace member positioned against the fourth cut seared surface, the third flange positioned against the third cut seared surface, the third flange return positioned in the third flange-return slot, and the fourth flange return positioned in the fourth flange-return slot. The block of polymeric foamed material may be cut prior to the cutting step (g) or after the cutting step (g) and/or prior to disposing the plurality of the first brace members and the plurality of the second brace members in the plurality of polymeric foamed material structures. Embodiments of the present inventions include one or more polymeric foamed material structures, including one or more produced in accordance with any of the methods of the embodiments of the present invention.

Further embodiments of the present invention include a method for forming a structure comprising the steps of:

a) cutting a first polymeric foamed material with a first cutter (e.g., a hot wire cutter or laser cutter) in a first direction relative to a first side surface of the first polymeric foamed material;

b) cutting with the first cutter the first polymeric foamed material in a second direction relative to the first direction to produce a first-cutter first cut surface terminating in opposed ends of the first polymeric foamed material;

c) cutting with the first cutter the first polymeric foamed material in a third direction relative to the second direction to produce a first-cutter second cut surface terminating in the opposed ends of the first polymeric foamed material

d) cutting the first polymeric foamed material with the first cutter to produce a first tongue in the first polymeric foamed material;

e) providing a first brace member having a first web and at least one first flange secured to the first web;

f) disposing respectively the first web and the first flange of the first brace member against the first-cutter first cut surface of step (b) and the first-cutter second cut surface of step (c) to produce a first polymeric foamed material panel having the first tongue;

g) cutting a second polymeric foamed material with a second cutter (e.g., a hot wire cutter or a laser cutter) to produce a second channel in the second polymeric foamed material;

h) cutting the second polymeric foamed material with the second cutter in a first direction relative to a second side surface of the second polymeric foamed material;

i) cutting with the second cutter the second polymeric foamed material in a second direction relative to the first direction to produce a second-cutter first cut surface terminating in opposed ends of the second polymeric foamed material;

j) cutting with the second cutter the second polymeric foamed material in a third direction relative to the second direction to produce a second-cutter second cut surface terminating in the opposed ends of the second polymeric foamed material;

k) providing a second brace member having a second web and at least one second flange secured to the second web;

l) disposing respectively the second web and the second flange of the second brace member against the second-cutter first cut surface of step (i) and the second-cutter second cut surface of step (j) to produce a second polymeric foamed material panel having the second channel; and

m) sliding the first tongue of the first polymeric foamed material panel into the second channel of the second polymeric foamed material panel to form a structure.

The immediate foregoing method preferably additionally comprises cutting the first polymeric foamed material with the first cutter to produce a first channel in the polymeric foamed material and cutting the second polymeric foamed material with the second cutter to produce a second tongue in the second polymeric foamed material. The first direction of step (a) is preferably generally perpendicular to the first side surface of step (a), and the second direction of step (b) is preferably generally perpendicular to the first direction of step (a). The third direction step (c) is preferably generally perpendicular to the second direction of step (b). The first direction of step (h) is preferably generally perpendicular to the second side surface of step (h), the second direction of step (i) is preferably generally perpendicular to the first direction of step (h), and the third direction of step (j) is preferably generally perpendicular to the second direction of step (i). The method additionally comprises cutting respectively the first polymeric foamed material with the first cutter in the cutting steps (a) through (d) generally simultaneously with cutting respectively the second polymeric foamed material with the second cutter in the cutting steps (g) through (j). The cutting step (b) preferably additionally produces an opposed first-cutter first cut surface terminating in the opposed ends of the first polymeric foamed material and opposed to the first-cutter first cut surface to form a first-cutter first slot in the first polymeric foamed material; and the cutting step (c) preferably additionally producing an opposed first-cutter second cut surface terminating in the opposed ends of the first polymeric foamed material and opposed to the first-cutter second cut surface to form a first-cutter second slot in the first polymeric foamed materials such that after the disposing step (f) the first web and the first flange of the first brace member are further disposed respectively in the first-cutter first slot and in the first-cutter

second slot. The cutting step (i) preferably additionally produces an opposed second-cutter first cut surface terminating in the opposed ends of the second polymeric foamed material and opposed to the second-cutter first cut surface to form a second-cutter first slot in the second polymeric foamed material. The cutting step (j) preferably additionally produces an opposed second-cutter second cut surface terminating in the opposed ends of the second polymeric foamed material and opposed to the second-cutter second cut surface to form a second-cutter seconds slot in the second polymeric foamed material such that after the disposing step (l) the second web and the second flange of the second brace member are further disposed respectively in the second-cutter first slot and in second-cutter second slot The first brace member and the second brace member may respectively comprise any suitable shape, such as a generally C-shape, and a portion of the first web of the first brace member may protrude from the first polymeric foamed material panel and/or a portion of the second web of the second brace member may protrude from the second polymeric foamed material panel. A structure produced in accordance with any of the methods of the embodiments of the present invention is an embodiment of the present invention.

Further alternative embodiments of the present invention also include a method for forming a structure comprising the steps of:

a) providing a first polymeric foamed material structure comprising a pair of opposed first ends, a first defined side surface, a first tongue, a first hotwire-cut seared surface having been cut by a hotwire cutter in a first direction relative to the first defined side surface and terminating in the pair of opposed first ends, a second hotwire-cut seared surface having been cut by a hotwire cutter in a second direction from the first hotwire-cut seared surface and terminating in the pair of opposed first ends, and a third hotwire-cut seared surface having been cut by a hotwire cutter in a third direction from the second hotwire-cut seared surface and terminating in the pair of opposed first ends;

b) providing a first brace member having a first web and at least one first flange secured to the web;

c) disposing respectively the first web and the first lange of the first brace member against the second hotwire-cut seared surface of step (a) and the third hotwire-cut seared surface of step (a) to produce a first polymeric foamed material panel having the first tongue;

d) providing a second polymeric foamed material structure comprising a pair of opposed second ends, a second defined side surface, a second channel, a first hotwire-cut seared surface having been cut by a hotwire cutter in a first direction relative to the second defined side surface and terminating in the pair of opposed second ends, a second hotwire-cut seared surface having been cut by a hotwire cutter in a second direction from the first hotwire-cut seared surface and terminating in the pair of opposed second ends, and a third hotwire-cut seared surface having been cut by a hotwire cutter in a third direction from the second hotwire-cut seared surface and terminating in the pair of opposed second ends;

e) providing a second brace member having a second web and at least one second flange secured to the web;

f) disposing respectively the second web and the second flange of the second brace member against the second hotwire-cut seared surface of step (d) and the third hotwire-cut seared surface of step (d) to produce a second polymeric foamed material panel having the second channel; and

g) disposing the first tongue of the first polymeric foamed material panel into the second channel of the second polymeric foamed material panel to form a structure. An embodiment of the present invention includes a structure formed in accordance with the immediate foregoing method.

Additional alternate embodiments of the present invention further include a method for producing a plurality of polymeric foamed material panels comprising the steps of:

a) cutting a polymeric foamed material with a plurality of cutters in a generally perpendicular direction from a defined surface (e.g., a side) of the polymeric foamed material;

b) cutting in at least a second direction the polymeric foamed material of step (a) with the plurality of cutters until each cutter forms in the polymeric foamed material a first respective slot terminating in opposed ends of the polymeric foamed material;

c) cutting with the plurality of cutters the polymeric foamed material of step (b) in the generally perpendicular direction of step (a) to produce a plurality of polymeric foamed material structures having first slots; and

d) disposing first brace members (e.g., Z-shape or (-shape brace members) in the first slots of the polymeric foamed material structures of step (c) to produce a plurality of polymeric foamed material panels with each polymeric foamed material panel having one of the first brace members.

The immediate foregoing method preferably additionally comprises cutting the polymeric foamed material with the plurality of cutters until each cutter forms a second respective slot in the polymeric foamed material and the produced plurality of polymeric foamed material structures include second slots, and disposing second brace members in the second slots of the produced polymeric foamed material structures such that each polymeric foamed material panel includes one of the second brace members. The first and second brace member include respectively a web which may protrude from the polymeric foamed material panel. This embodiment of the present invention includes polymeric foamed material panels formed in accordance with the immediate foregoing method.

Additional alternate embodiments of the present invention further provides a method for producing a plurality of polymeric foamed material panels comprising the steps of:

a) cutting a polymeric foamed material with a plurality of cutters in a generally perpendicular direction from a defined surface of the polymeric foamed material;

b) cutting in at least a second direction the polymeric foamed material of step (a) with the plurality of cutters until each cutter forms in the polymeric foamed material a first respective slot terminating in opposed ends of the polymeric foamed material;

c) cutting with the plurality of cutters the polymeric foamed material of step (b) in the generally perpendicular direction of step (a) to produce a plurality of polymeric foamed material structures having first slots; and

d) disposing first brace members in the first slots of the polymeric foamed material structures of step (c) to produce a plurality of polymeric foamed material panels with each polymeric foamed material panel having one of the first brace members.

In the immediate foregoing method, the first brace members preferably each comprise a generally C-shape, and the defined surface is a side of the polymeric foamed material. Each of the first brace members also preferably include a web portion which protrudes from the polymeric foamed material panel. The immediate foregoing method preferably additionally comprises cutting the polymeric foamed material with the plurality of cutters until each cutter forms a second respective slot in the polymeric foamed material and the produced plurality of polymeric foamed material structures include second slots, and disposing second brace members in the second slots of the produced polymeric foamed material structures such that each polymeric foamed material panel includes one of the second brace members. Embodiments of the invention also include a plurality of polymeric foamed material panels produced in accordance with the immediate foregoing method.

Further additional alternative embodiments of the present invention provide a method for producing a plurality of polymeric foamed material panels comprising the steps of:

a) providing a block of polymeric foamed material in a generally stationary position having a defined surface (e.g., a side of the block of the polymeric foamed materials) and a pair of opposed ends;

b) moving from the defined surface a plurality of cutters through the generally stationary block of polymeric foamed material of step (a) in generally perpendicular direction of travel;

c) interrupting the movement of the plurality of cutters from the generally perpendicular direction of travel through the generally stationary blocks of polymeric foamed material to move the cutters in at least one direction of travel which differs from the generally perpendicular direction of travel such that each cutter produces a respective brace-receiving slot in the polymeric foamed material terminating in the opposed ends;

d) continuing the moving step (b) of the plurality of cutters in the generally perpendicular direction of travel, while intermittently interrupting the movement of the plurality of cutters from generally perpendicular direction of travel to move the cutters in at least one direction of travel which differs from the generally perpendicular direction of travel such that each cutter produces at least one additional respective brace-receiving slot in the polymeric foamed material, until the plurality of cutters have moved completely through the generally stationary block of polymeric foamed material after which a plurality of polymeric foamed material structures are produced with each polymeric foamed material structure having a plurality of brace-receiving slots; and

e) disposing brace members into the brace-receiving slots of the polymeric foamed material structures of step (d) to produce a plurality of polymeric foamed material panels with each polymeric foamed material panel having two of the brace members. This embodiment of the present invention includes a plurality of polymeric foamed material panels produced in accordance with the immediate foregoing method.

Another additional embodiment of the present invention provides a method for producing a plurality of polymeric foamed material panels comprising the steps of:

a) cutting a polymeric foamed material in a first direction with a plurality of cutters generally moving in unison;

b) cutting subsequently the polymeric foamed material of step (a) in a second direction with the plurality of cutters generally moving in unison;

c) cutting, after the cutting step (b), the polymeric foamed material of step (b) in the first direction with the plurality of cutters generally moving in unison;

d) cutting, after the cutting step (c), the polymeric foamed material of step (c) in a third direction with the plurality of cutters generally moving in unison;

e) cutting, after the cutting step (d), the polymeric foamed material of step (d) in the first direction with the plurality of cutters generally moving in unison until the cutters have cut through the polymeric foamed material of step (d) to produce a plurality of polymeric foamed material structures having brace-receiving configurations; and

f) sliding brace members into the brace-receiving configurations of the polymeric foamed material structures of step (e) to produce a plurality of polymeric foamed material panels with each polymeric foamed material panel having one of the brace members. A plurality of polymeric foamed material panels produced in accordance with the immediate foregoing method is also an embodiment of the present invention.

An embodiment of the present invention also provides a method for producing a plurality of polymeric foamed material panels comprising the steps of:

(a) providing a block of polymeric foamed material having a defined surface (e.g., a side or a side surface or a defined side surface) and a pair of opposed ends;

b) moving from the defined surface a plurality of cutters through the block of polymeric foamed material in a generally perpendicular direction of travel, while interrupting at least one time the moving of the plurality of cutters in the generally perpendicular direction of travel to move the cutters through the block of polymeric foamed material in at least one direction of travel which differs from the generally perpendicular direction of travel, such that each cutter produces a respective brace-receiving slot in the polymeric foamed material terminating in the opposed ends, until the plurality of cutters have moved completely through the block of polymeric foamed material to produce a plurality of polymeric foamed material structures with each structure having at least one brace-receiving slot; and

c) disposing a brace member into each brace-receiving slot of the polymeric foamed material structures to produce a plurality of polymeric foamed material panels with each of the polymeric foamed material panels having at least one brace member. The foregoing embodiment of the present invention includes a plurality of polymeric foamed material panels produced in accordance with the immediate foregoing method.

Another embodiment of the present invention also includes a method for producing a polymeric foamed material panel comprising the steps of:

a) providing a block of polymeric foamed material having a defined surface and a pair of opposed ends;

b) cutting the block of polymeric foamed material in a first direction relative to the defined surface;

c) cutting the block of polymeric foamed material in a second direction produce a first slot including a first cut surface terminating in the opposed ends;

d) cutting the block of polymeric foamed material from the first slot to produce a second slot communicating with the first slot and including a second cut surface terminating in the opposed ends; and

e) disposing a brace member against the first cut surface and the second cut surface respectively in the first slot

and in the second slot to produce a polymeric foamed material panel. The foregoing embodiment of the present invention includes a polymeric foamed material panel produced in accordance with the immediately foregoing method.

Further additional alternative embodiments of the present invention also provide a method for producing a plurality of polymeric foamed material structures having slot sections for receiving stud members comprising the steps of:

a) cutting a polymeric foamed material with a plurality of cutters (e.g., hotwire cutters and/or laser cutters which may be computer operated) in a generally perpendicular direction from a side of the polymeric foamed material;

b) cutting subsequently in at least a second direction the polymeric foamed material of step (a) with the plurality of cutters until each cutter forms a first respective slot section in the polymeric foamed material, the first respective slot section terminating in opposed ends of the polymeric foamed material; and

c) cutting in the generally perpendicular direction of step (a) the polymeric foamed material with the plurality of cutters to produce a plurality of polymeric foamed material strictures having a plurality of first slot sections, with each polymeric foamed material structure having one of the first slot sections.

In the immediate foregoing method the plurality of cutters preferably move generally simultaneously, and the polymeric foamed material of step (a), step (b) and step (c) is preferably generally stationary. The at least one second direction may comprise a second direction generally perpendicular to the generally perpendicular direction of step (a). The immediate foregoing method preferably additionally comprises cutting with the plurality of cutters, before the cutting step (c) and after the cutting step (b), the polymeric foamed material in the generally perpendicular direction of step (a) until each cutter formed a second respective slot section in the polymeric foamed material the second respective slot section communicating with the first perspective slot section and terminating in opposed ends of the polymeric foamed material; and the cutting step (c) subsequently produces a plurality of polymeric foamed material structures having a plurality of first slot sections and a plurality of second slot sections, with each polymeric foamed material structure having one of the first slot sections and one of the second slot sections. The immediate foregoing method preferably alternatively additionally comprises cutting with the plurality of cutters before the cutting step (c) and after the cutting step (b), the polymeric foamed material in the generally perpendicular direction of step (a) and subsequently in a fourth direction until each cutter forms a second respective slot section and a third respective slot section in the polymeric foamed material, the second respective slot section communicating with the first respective slot section and terminating in opposed ends of the polymeric foamed material and the third respective slot section communicating with the second respective slot section and terminating in opposed ends of the polymeric foamed material; and the cutting step (c) subsequently produces a plurality of polymeric foamed material structures having a plurality of first slot sections, a plurality of second slot sections, and a plurality of third slot sections, with each polymeric foamed material structure having one of the first slot sections, one of the second slot sections, and one of the third slot sections. The immediate foregoing method also preferably additionally comprises providing a plurality of stud members, and disposing the plurality of stud members in the first slot sections of the polymeric foamed material structures to produce a plurality of polymeric foamed material panels, with each polymeric foamed material panel having one of the stud members. The immediate foregoing method also preferably alternatively additionally comprises providing a plurality of stud members, and disposing the plurality of stud members in the first slot sections and in the second slot sections and in the third slot sections of the polymeric foamed material structures to produce a plurality of polymeric foamed material panels, with each of the polymeric foamed material panels having one of the stud members respectively occupying the first slot section, the second slot section and the third slot section associated with the each of the polymeric foamed material panels. A plurality of polymeric foamed material structure produced in accordance with the immediate foregoing method is also an embodiment of the present invention.

An alternative embodiment of the present invention provides a method for producing a plurality of polymeric foamed material structures having slots for receiving stud members comprising the steps of:

a) cutting a polymeric foamed material with a plurality of cutters (e.g., hot wire cutters, and/or laser cutters, which may be computer operated) in a generally perpendicular direction from a side surface of the polymeric foamed material;

b) cutting subsequently in at least a second direction the polymeric foamed material of step (a) with the plurality of cutters until each cutter forms a first respective slot; in the polymeric foamed material, the first respective slot terminating in opposed ends of the polymeric foamed material;

c) cutting in the generally perpendicular direction of step (a) the polymeric foamed material with the plurality of cutters to produce a plurality of polymeric foamed material structures having a plurality of first slots, with each polymeric foamed material structure having one of the first slots.

The immediate foregoing method may additional comprise cutting, prior to the cutting step (c) and after the cutting step (b), the polymeric foamed material with the plurality of cutters until each cutter forms a second respective slot in the polymeric foamed material, the second respective slot terminating in opposed ends of the polymeric foamed material; and the cutting step (c) subsequently producing a plurality of polymeric foamed material structures having a plurality of first slots and a plurality of second slots, with each polymeric foamed material structure having one of the first slots and one of the second slots. The polymeric foamed material may be generally stationary and the plurality of cutter may generally move simultaneously. The immediate foregoing method may additionally comprise providing a plurality of stud members wherein each of the stud members comprise a web and a flange integrally bound to the web; and disposing the plurality of stud members in the first slots and in the second slots of the polymeric foamed material structures to produce a plurality of polymeric foamed material panels, with each of the polymeric foamed material panels having the web and the flange of one of the stud members respectively occupying the first slot and the second slot associated with the each of the polymeric foamed material panels. Embodiments of the invention also include a plurality of polymeric foamed material structures produced in accordance with the immediate foregoing method.

A further alternative embodiment of the present invention provides a method for producing a plurality of polymeric foamed material structures having brace-receiving slots comprising the steps of:

a) providing a generally stationary block of polymeric foamed material having a side surface and a pair of opposed ends;

b) moving generally simultaneously from the side surface a plurality of cutters (e.g., hot wire cutters or laser cutters which may be computer operated) through the block of polymeric foamed material in a generally perpendicular direction of travel, while interrupting at least one time the moving of the plurality of cutters in the generally perpendicular direction of travel to move the cutters through the blocks of polymeric foamed material in at least one direction of travel comprising a direction which differs from the generally perpendicular direction of travel, such that each cutter producers a respective brace-receiving slot in the polymeric foamed material terminating in the opposed end, until the plurality of cutters have moved completely through the generally stationary block of polymeric foamed material to produce a plurality of polymeric foamed material structures having a plurality of brace-receiving slots, with each polymeric foamed material structure having at least one of the brace-receiving slots.

The immediate foregoing method additionally comprise providing a plurality of brace members; and disposing the plurality of brace members in the plurality of brace-receiving slots of the polymeric foamed material structures to produce plurality of polymeric foamed material panels, with each polymeric foamed material panel having at least one of the brace members. The at least one direction of travel may comprise a first direction of travel, a second direction of travel immediately following the first direction of travel and being generally parallel to the generally perpendicular direction of travel, and a third direction of travel immediately following the second direction of travel. The first direction of travel may be generally normal to the generally perpendicular direction of travel, and the second direction of travel may be generally normal to the first direction of travel. An additional embodiment of the present invention includes structures produced in accordance with the immediate foregoing method.

It is therefore an object of the present invention to provide a method for producing a polymeric foamed material panel.

It is another object of the present invention to provide a method for forming a polymeric foamed material structure.

It is yet further an object of the present invention to provide a polymeric foamed material panel.

These, together with the various ancillary objects and features which will become apparent to those skilled in the art as the following description proceeds, are attained by these novel methods and polymeric foamed material panels, a preferred embodiment being shown with reference to the accompanying drawings, by way of example only, wherein:

BRIEF DESCRIPTION OF THE DRAWINGS

FIG. **1** is a perspective view of a polymeric foamed material panel produced in accordance with the method of the present invention;

FIG. **2** is a partial perspective view of a structure consisting of standard trusses and polymeric foamed material panels forming walls and roofs;

FIG. **2A** is another partial perspective view of a structure similar to the partial perspective view in FIG. **2** wherein the structure includes standard trusses and polymeric foamed material panels forming walls and roofs;

FIG. **3** is a partial perspective view of a polymeric foamed material panel including a brace member having an opening with a conduit supported by the polymeric foamed material and passing through the opening of the brace member without contacting any of the circumference or perimeter of the opening of the brace member;

FIG. **4** is a partial perspective view of two panel members disposed contiguous to each other and encapsulated in sheetrock or the like;

FIG. **5** is a top plan view of the pair of contiguous panel members of FIG. **4** encapsulated in sheetrock or the like;

FIG. **6** is a top plan view of a panel member having a plurality of steel studs or brace members disposed therein with the inside wall thereof covered with sheetrock and further having a tongue member at one end and a channel member at another end;

FIG. **7** is a perspective view of the hot wire cutter mounted on a table and operated by a computer;

FIG. **8** is a schematic diagram of the various process steps in producing the panel member of the present invention;

FIG. **9** is a perspective view of a hot wire cutter having cut through the polymeric foam material to a point where a subsequent general C-shaped slot is to be cut by the hot wire cutter, the C-shaped slot to be cut being represented by dotted lines;

FIG. **10** is a perspective view of the polymeric foamed material after a pair of C-shaped slots have been cut with the hot wire cutter and after the polymeric foam material has been rotated, with a hot wire cutter having cut a general cylindrical opening in the polymeric foam material transverse to the C-shaped slots, leaving a residual core material in the transverse opening; and further illustrating a metallic U-shaped stud in proximity to one of the C-shaped slots for being slid into the same;

FIG. **11** is an end elevational view of the residual core material being removed from the cylindrical opening in the polymeric foam material and with a conduit aligned with the cylindrical opening in order to be slid subsequently therein;

FIG. **12** is vertical sectional view of the polymeric foam material supporting a conduit while the conduit passes through an opening in the brace or stud member without touching any of the circumference or perimeter of the stud or brace member;

FIG. **13** is a partial perspective view of two polymeric foamed material panel members with ends of the two polymeric foamed material panel members being generally aligned such that the tongue on one end of one panel member may slid into a channel in one of the ends of the other panel member;

FIG. **14** is a partial vertical sectional view taken in direction of the arrows and along the plane of line **14—14** in FIG. **8**;

FIG. **14A** is a vertical sectional view taken in direction of the arrows and along the plane of line **14A—14A** in FIG. **14**;

FIG. **15** is a perspective view of a plurality of hot wire cutters cutting through a block of polymeric foamed material to produce a plurality of polymeric foamed structures having slots for receiving brace or stud members and having chases (or polymeric openings) wherethrough conduits pass;

FIG. **16** is a perspective view of a table assembly supporting a block of polymeric foamed material with a plurality of hot wire cutters passing and cutting through the polymeric foamed material block, and with the vertical and horizontal movement of the hot wire cutters being respectively controlled by a motor (M_V) for controlling the vertical movement of the plurality of hot wire cutters and by a motor (M_H) for controlling the horizontal movement of the plu-

rality of hot wire cutters, wherein power to the motors M_V and M_H is allocated or metered from a CNC controller which receives signals from a computer;

FIG. **17** is an enlarged partial perspective view of a horizontal trolley supporting a vertical support of a harp and slidably engaged to a horizontal trolley track supported by the table assembly, and of a vertical trolley slidably mounted to the vertical support of the harp with a hot wire cutter coupled to the vertical trolley, such that the horizontal trolley can move the hot wire cutter in a horizontal direction and the vertical trolley can move the hot wire cutter in a vertical direction;

FIG. **18** is a schematic block diagram of the computer control assembly for controlling the plurality of hot wire cutters illustrating a computer, a CNC controller electrically engaged to the computer for receiving signals therefrom, a power box communicating with a power source and electrically engaged to the CNC controller to supply power to the CNC controller, and a pair of motors (M_V and M_H) electrically engaged to the CNC controller for receiving metered or allocated power from the CNC controller to control the vertical and horizontal movement of the plurality of hot wire cutters;

FIG. **19** is an end elevational view of a plurality of polymeric foamed structures produced after a plurality of computer-controlled hot wire cutters have passed through a block of polymeric foamed material;

FIG. **20** is an end elevational view of a polymeric foamed structure having a slot formed therein with a hot wire cutter with arrows representing directions and paths that the hot wire cutter travelled in forming the slot;

FIG. **20A** is an enlarged end elevational view of the polymeric foamed structure of FIG. **20** with a stud or brace member lodged in the slot;

FIG. **20B** is an end elevational view of a pair of polymeric foamed material structures which were integrally bound to each other before being severed, with one polymeric foamed material structure having a polymeric material recess and with the other polymeric foamed material structure having a polymeric material crest which may serve as a benchmark or indicator for a brace member when the brace member is lodged in a slot located immediately below the polymeric material crest;

FIG. **21** is an exploded detail view of a section of the slot of FIG. **20** with the hot wire cutter being shown in a dotted line representation and with the arrows showing the directions and paths of travel for the hot wire cutter;

FIG. **22** is an exploded detail view of another section of the slot of FIG. **20** with the hot wire cutter being shown again in a dotted line representation and with the arrows showing again the directions and paths of travel for the hot wire cutter;

FIG. **23** is an enlarged view of the detail view of FIG. **21** with "W" indicating the width of the slot and "D" indicating the diameter of the hot wire cutter;

FIG. **24** is an enlarged view of the detail view of FIG. **22**;

FIG. **25** is an end elevational view of a polymeric foamed material structure produced from a block of polymeric foamed material and after a hot wire cutter has cut a plurality of slots (i.e., C-brace chases), a polymeric opening (i.e., a wiring chase), and a track chase in the polymeric foamed material structure;

FIG. **26** is another end elevational view of a polymeric foamed material structure produced from a block of polymeric foamed material and after a hot wire cutter has cut in the polymeric foamed material a plurality of slots or chases for receiving brace or stud members, a polymeric opening or wiring chase for receiving a conduct, and a track chase for receiving a track member;

FIG. **27** is an end elevational view of the polymeric foamed material structure of FIG. **26** after brace or stud members (i.e., C-shaped braces or studs) have been slid into the plurality of slots or chases such that a portion of the brace members protrude from the polymeric foamed material structure;

FIG. **28** is an end elevational view of the polymeric foamed material structure of FIG. **27** after a track member has been slid into the track chase and over the ends of the brace or stud members;

FIG. **28A** is a vertical sectional view taken in direction of the arrows and along the plane of line **28A—28A** in FIG. **28**;

FIG. **28B** is a vertical sectional view taken in direction of the arrows along the plane of line **28B—28B** in FIG. **28**;

FIG. **29** is an end elevational view of a polymeric foamed material structure produced from the block of polymeric foamed material and after a hot wire cutter has cut a plurality of slots or chases and a track chase in the polymeric foamed material structure;

FIG. **30** is an end elevational view of the polymeric foamed material structure of FIG. **29** after a plurality of Z-shaped studs or braces have been inserted into the slots or chases such that a portion of the Z-shaped studs or braces protrudes from the polymeric foamed material structure;

FIG. **31** is an end elevational view of the polymeric foamed material structure in FIG. **30** after a track member has been inserted into the track chase and over the ends of the Z-shaped studs or brace members;

FIG. **32** is an enlarged partial perspective view of an end of a polymeric foamed material structure after a hot wire cutter has cut a plurality of C-shaped slots in the polymeric foamed material structure and after a polymeric opening (i.e. a wiring chase) has also been cut in the polymeric foamed material structure by the hot wire cutter;

FIG. **33** is a partial perspective view of an end of a polymeric foamed material panel having a plurality of C-shaped studs or brace members inserted within slots in a polymeric foamed material structure with a portion of the studs or brace members protruding therefrom;

FIG. **34** is a partial perspective view of an end of a polymeric foamed material panel having a plurality of studs or brace members lodged in slots produced by a hot wire cutter with a portion of each of the studs or brace members protruding from the polymeric foamed material panel;

FIG. **35** is a vertical sectional view taken in direction of the arrows and along the plane of line **35—35** in FIG. **34**, illustrating a track chase which was cut in the polymeric foamed material by a hot wire cutter;

FIG. **36** is a perspective view of a polymeric foamed material panel having a plurality of braces embedded therein with a vertical conduit having been slid into a vertical wiring chase, and with a horizontal conduit having been slid into a horizontal wiring chase, and including an internal reinforcing member lodged within a horizontal polymeric opening with a male end of the internal reinforcing member protruding from a side of the polymeric foamed material panel; and

FIG. **37** is a partial side elevational view of a pair of engaged polymeric foamed material panels having respective internal reinforcing members with the male end of one internal reinforcing member lodged in the female end of the other internal reinforcing member.

DESCRIPTION OF THE PREFERRED EMBODIMENT

Referring in detail now to the drawings wherein similar parts of the invention are identified by like reference numerals, there is seen a panel member, generally illustrated as **10**, produced in accordance with the method of the present invention. The panel member **10** comprises a polymeric foamed material, generally illustrated as **12**, and a plurality of stud or brace members **14** disposed in the polymeric foamed material **12**. The polymeric foamed material **12** has a pair of opposed ends **12***f* and **12***g* (see FIGS. **6**, **9** and **10**). Each of the brace members **14** pass into a slot, generally illustrated as **30** (see FIGS. **4** and **8**), which was preferably preformed or precut. As best shown in FIGS. **6** and **29**, slot **30** may be non-linear. Each of the brace members **14** may be any suitable brace member such as studs, load-bearing members, etc. constructed of any suitable material (e.g. metal, wood, etc.) Most preferably, the brace members **14** are metal (e.g. a light gauge metal) studs for load-bearing and adding strength to the polymeric foamed material **12**. As best shown in FIGS. **1** and **6**, each brace member **14** includes brace sides **14***a*, **14***b*, **14***c*, and **14***d* and **14***e* which are all essentially surrounded by the polymeric foamed material **12**. Stated alternatively and as best shown in FIGS. **33** and **34**, each stud or brace member includes a web **14***w*, a pair of flanges **14***f*—**14***f* integrally secured to the web **14***w*, and a pair of flange returns **14***r*—**14***r*, respectively integrally bound to the respective flanges **14***f*—**14***f*.

In the embodiment of the invention shown in FIGS. **30** and **31**, each stud or brace member **14** is generally geometrically Z-shaped with the web **14***w* being oblique with respect to flanges **14***f*—**14***f* as opposed to being normal thereto as shown in FIGS. **31** and **35**. In the embodiment of the invention shown in FIGS. **27**, **28**, **30**, **31**, **33** and **34** a portion of each stud or brace member protrudes from the polymeric foamed material **12**. More specifically, one of the flanges **14***f*—**14***f* and its associated flange return **14***r*, along with a portion of the web **14***w*, are embedded in the polymeric foamed material **12**, while the remaining flange **14***f* and its associated flange return **14***r*, along with a remaining portion of the **14***w*, are disposed outside of the polymeric foamed material **12**.

Referring now to FIGS. **20** and **20**A, there is seen a slot **30** communicating with a polymeric material recess **12***r*. Slot **30** and polymeric material recess **12***r* were cut in the polymeric foamed material in accordance with a cutting procedure set forth hereinafter. As best shown in FIGS. **20**, **21** and **22**, the slot **30** more specifically includes vertical slot section having opposed cut surfaces $30r_{1c}$—$30r_{1c}$ terminating in the opposed ends **12***f* and **12***g* and a generally inverted L-shaped slot section **30** which includes individual slot sections **30***w*, **30***f* and respectively having opposed cut surfaces $30w_c$—$30w_c$, $30f_c$—$30f_c$ and $30r_{2c}$—$30r_{2c}$. As best shown in FIG. **20**, slot sections $30r_1$, and **30***w* directly communicate with the polymeric material recess **12***r* having cut surface $12r_2$. A brace member **14** lodges in slot section $30r_1$, in polymeric material recess **12***r*, and in slot section **30***s*. More specifically and as best shown in FIG. **20**A, one flange return **14***r* and one flange **14***f* of a brace member **14** respectively lodges in slot section $30r_1$ and polymeric material recess **12***r* and respectively against cut surfaces $30r_{1c}$—$30r_{1c}$, and cut surface $12r_c$, while the remaining web **14***w*, flange **14***f* and flange return **14***r* of the brace **14** respectively lodges in slot section **30***w* and against cut surfaces $30w_c$—$30w_c$, slot section **30***f* and against cut surfaces $30f_c$—$30f_c$, and slot section $30r_2$ and against cut surfaces $30r_{2c}$—$30r_{2c}$, of the slot section **30***s*. As further best shown in FIGS. **20**, **20**A and **20**B, there is seen acut surface, generally illustrated as **12***cs* and including cut surface $12cs_1$ (e.g., a defined planar surface $12cs_1$) and cut surface $12cs_2$ (e.g., a defined planar surface $12cs_2$). As best shown in FIG. **20**A, web **14***f* of brace member **14** is generally aligned with cut surface **12***cs*, more specifically with cut surfaces $12cs_1$ and $12cs_2$. As will be further indicated hereinafter, if a hot wire (identified as "**58**" below) is used as a cutter for cutting or forming slot(s) **30** including the associated cut surfaces (e.g., $30w_c$—$30w_c$, $30f_c$—$30f_c$, $30r_{2c}$—$30r_{2c}$, etc.), the cut surface(s) are seared surfaces.

After a polymeric material recess **12***r* has been cut in a polymeric foamed material **12**, the polymeric foamed material **12** adjacent or contiguous to the polymeric foamed material **12** having the polymeric material recess **12***r* has a polymeric material crest or ridge **12***c* as best shown in FIG. **20**B. This polymeric material crest **12***c* previously integrally resided within the polymeric material recess **12***r*, and may be either removed, such as by sanding, or be used as a benchmark or indicator for a location of a brace member **14**. Referring more particularly to FIG. **20**B wherein there is seen two severed polymeric foamed materials **12***a* and **12***b*, with polymeric foamed material **12***a* having polymeric material recess **12***r* and with polymeric foamed material **12***b* having the polymeric material crest **12***c*. Each of the polymeric foamed materials **12***a* and **12***b* respectively include the following as best shown in FIG. **20**B: cut surface **12***cs* including cut surfaces $12cs_1$ and $12cs_2$; slot section $30r_1$ having opposed cut surfaces $30r_{1c}$—$30r_{1c}$; polymeric material recess **12***r* including cut surface $12r_c$; slot section **30***w* comprising opposed cut surfaces $30w_c$—$30w_c$; slot section **30***f* including opposed cut surfaces $30f_c$—$30f_c$; and slot section $30r_2$ having opposed cut surfaces $30r_{2c}$—$30r_{2c}$. When a brace member **14** is slid into the slot **30** of the polymeric foamed material **12***b*, the brace member **14** in the polymeric foamed material **12***b* would be immediately below (e.g. one (1) to three (3) inches below) the polymeric material crest **12***c*. Thus, a person looking at the planar side of polymeric foamed material **12***b* having the polymeric material crest **12***c*, and not being able to see the planar side of the polymeric foamed material **12***b* where the brace member **14** is exposed, would still know that immediately below the polymeric material crest **12***c* lies a brace member **14**. Thus, the polymeric material crest **12***c* may serve as a benchmark or indicator for the location of a brace member **14**.

In the embodiment of the invention shown in FIGS. **25**–**31**, **34** and **36**, the polymeric foamed material **12** includes a track chase **100** (i.e., a cut slot ranging from about one-quarter (¼) inch to about 1½ inches in depth), as best shown in FIG. **35**. A track member **102** is provided and includes a track base **104** with a pair of track flanges **105**–**106** integrally bound thereto. As best shown in FIGS. **28**A and **28**B, one of the track flanges **106** may lodge in the track chase **100** with a portion of the track base **104** extending away from the polymeric foamed material **12** (see FIG. **28**A), such that one of the track flanges **106** associated with the track base **104** is situated outside of the polymeric foamed material **12**. The track flange **106** disposed outside of the polymeric foamed material **12** may be secured to one of the flanges **14***f* of the stud or brace member **14** by a screw or bolt **107** as best shown in FIG. **28**B.

The panel member **10** may additionally include a conduit **16** also disposed in the polymeric foamed material **12**, preferably transversely disposed therein and generally nor-

mal with respect to the brace members **14**. The conduit **16** passes into a transverse polymeric opening **17** (see FIGS. **10** and **11**) in the polymeric foamed material **12**. In the embodiment of the invention shown in FIGS. **15–35**, the polymeric foamed material **12** in the panel member **10** is provided with a longitudinal (and/or vertical) polymeric opening **15** which is preferably for receiving a conduit **19** (see FIG. **36**). The conduits **16** and **19** may be employed for any suitable use; for example, a utility receptor (e.g. electrical wires), water, gas, etc. The polymeric openings **15** and **17** as well as slot **30** are preferably formed with at least one seared or carther-ized wall **32**. Cartherizing and/or searing the wall(s) of the polymeric openings **15** and **17** and/or slot **30** hardens and smoothes the wall(s) to facilitate the sliding of the conduits **16** and **19** and to brace member(s) **14** thereinto. As will be further explained below, the seared or cartherized wall **32** is preferably formed by hot wire cutting.

The panel member **10** may also additionally include an internal reinforcing member, generally illustrated as **23** in FIG. **36**. The reinforcing member **23** includes a male end **23***m* and a female end **23***f*. When two panels **10—10** are placed next to each other in a side-to-side relationship for assembling a structure, the male end **23***m* of one reinforcing member **23** in one panel **10** slidably lodges into the female end **23***f* of the other panel **10**, as best shown in FIG. **37**. The reinforcing member **23** lodges in a transverse polymeric opening **25**, which is formed similarly as transverse polymeric opening **17** is formed. The reinforcing member **23** preferably extends from a tongue (identified as "**24**" below) on one end of the panel member **10** to a channel (identified as "**26**" below) on the other end of the panel member **10**. Thus, the male end **23***m* of the reinforcing member **23** would protrude from a tongue while the female end **23***f* of the reinforcing member **23** would communicate with a channel. Transverse polymeric opening **25** is formed with at least one seared or cartherized wall **32** to facilitate the sliding of the reinforcing member **23** thereinto.

Each of the brace members **14** has an opening **18** that has a circumference (or perimeter) which is larger than the circumference (or perimeter) of the conduit **16** and larger than the circumference (or perimeter) of the polymeric opening **17** such that after any and all openings **18** have been aligned with any and all polymeric openings **17**, the conduit **16** may pass through a respective polymeric opening **17** and through a respective polymeric opening **18** in the brace members **14**, preferably without contacting any of the circumferential perimeter of the opening **18** and be supported in a suspended relationship with respect thereto by the polymeric foamed material **12**. When ever "perimeter" is stated in the specification and in the claims, it is to be understood to mean any boundary of any opening (e.g. a square opening, a circular opening, etc.) Thus, the term "perimeter" is to include opening, circumference.

For the embodiment of the invention shown in FIGS. **36** and **37**, each of the brace members **14** would have an additional opening **18** that has a circumference (or perimeter) which is larger than the circumference (or perimeter) of the internal **5** reinforcing member **23** and larger than the circumference (or perimeter) of the polymeric opening **25** such that after any and all additional openings **18** have been aligned with any polymeric opening **25**, the internal reinforcing member **23** may lodge in the polymeric opening **25** and pass through the additional opening **18** in the brace members **14**, preferably without contacting any of the circumferential perimeter of the additional opening **18** such as to be supported in a suspended relationship with respect thereto by the polymeric foamed material **12**.

Each of the panel members **10** also preferably includes ends **20** and **22** (each a defined edge). End **20** is formed with a tongue **24** and the end **22** is formed with a channel **26**. Formation of the tongue **24** and/or the channel **26** is preferably accomplished by cutting (preferably hot wire cutting) a portion **36** (see FIG. **8**) of polymeric foamed material **12** off of the end **20** and/or end **22** respectively. As best shown in FIG. **13**, a pair of panel members **10—10** may be interengaged by sliding the tongue **24** of end **20** into the channel **26** of end **22** to form a structure. As further best shown in FIG. **13**, each of the panel members **10** includes the brace member **14** having the opening **18** with the conduit **16** passing through and between the two interengaged panel members **10—10** such that the polymeric foamed material **12** of each of the panel members **10** supports the conduit **16** in a space relationship with respect to the perimeter (i.e. circumference) of each of the openings **18**. In other words, the conduit **16** is preferably not to contact any part of the brace member **14**.

The polymeric foamed material **12** of the present invention may be any suitable material that is capable of producing the panel **10** of the present invention, preferably a suitable material that is capable of being cut and/or burned and/or melted (i.e. hot wire cut or melted) to produce the panel **10** of the present invention. The polymeric foamed material **12** may be either high density and/or low density polymeric material. The polymeric foamed material **12** provides significant insulating qualities and thereby reduces heat and cooling costs as compared with conventional fiberglass batt insulation of equal thickness. Furthermore, the polymeric foamed material **12** in combination with the plurality of brace members **14** may be customized to provide complete design flexibility and superior structural advantages in shear strength and lateral load capability. The polymeric foamed material **12** exhibits a high strength to weight ratio and also exhibits superior insulating properties. The polymeric foamed material panel **10** provides both a structure and a substrate for the interior and exterior finishes.

Suitable polymeric foamed materials **12** have been discovered to be heat expandable plastic materials, such as pelletized polystyrene and the like. Other suitable heat expandable plastic materials that are within the spirit and scope of the present invention for the polymeric foamed material **12** is polyethylene, polyurethane, polypropylene, polyvinylchloride, etc., all being at a density to provide good thermal insulation and strength. The density is preferably of the order of about ½ pound per cubic foot to about 8 pounds per cubic foot. A density of from about 1 pound per cubic foot to about 3 pounds per cubic foot has been found to provide very good thermal properties as well as excellent physical properties including strength.

The heat expandable plastic material also provides for excellent burn-back or melt-back qualities when cut by a laser cutter (not shown) or by a hot wire cutter (identified as "**50**" below). When the below identified hot wire cutter cuts the heat expandable plastic material, the material typically burns and melts, more specifically melts back, to form the polymeric openings **15**, **17** and **25** and slot **30** within the polymeric foamed material **12**. Prior to commencing the formation of polymeric openings **15**, **17** and **25** and/or slot **30** (i.e. a brace-receiving configuration or brace-receiving configured slot **30**) within the polymeric foamed material **12**, the below identified hot wire cutter cuts and/or burns and/or melts back from a surface **74** (i.e. a defined surface **74**) a slot **70** (preferably a generally straight thread-like slot **70** with a seared wall **32**) down to a point **72** (i.e. a preconfiguration cut point **72**) whereafter the below identi-

fied hot wire cutter cuts and/or burns and/or melts back the heat expandable plastic material to produce the polymeric openings **15**, **17** and **25** and/or slots **30**. The polymeric opening **17** is more technically produced after a residual core **12A** (see FIG. **11**) is removed in any suitable manner or by any suitable means. The polymeric openings **15** and **25** are similarly produced, with the residual cores for polymeric openings **15** and **25** not being shown.

Certain epoxy resinous materials have also been discovered to be suitable polymeric foamed material **12**. Other suitable polymeric foamed material(s) **12** for the present invention include a rigid polystyrene, polyurethane, or polyisocyanurate foam or styrofoam. The polymeric foamed material **12** of the present invention provides for prefabricated panels **10** that may be easily installed at a building site for constructing a house, an industrial building, or any other structure, generally illustrated as **40** in FIGS. **2** and **2A**.

The most preferred polymeric foamed material **12** from which the panel **10** is to be constructed is expanded polystyrene beads. It is lightweight, quite strong and has excellent insulating qualities. On an outside wall **42** (see FIG. **6**) of the polymeric foamed material panel **10**, a sheet of outer skin facing material **46** (such as one or more asbestos cement sheet, plywood, reconstituted timer sheeting, flat steel sheet, profiled steel sheet, rigid plastic sheet or flexible metal or plastic film or various combinations of outer skins) may be mounted or secured thereto. Examples of other exterior finishes which may be applied include one or more of: EIFS, stucco, metal cladding roofing material, ceramic tiling, wood, vinyl or other treatment customarily used in building construction. On an inside wall **48** (see FIG. **6** again) of the polymeric foamed material panel **10**, a sheet of inner skin facing material **49** (e.g. sheet rock or the like) may be mounted or secured thereto. The sheet of inner skin facing material **49** may be any one or more suitable material(s) customarily employed in finishing the inside walls, roofs, etc., in building construction.

A hot wire cutter assembly, generally illustrated as **50** (see FIG. **7**), is preferably provided for cutting and searing purposes. The hot wire cutter assembly **50** is electrically engaged to a computer **52** via one or more conductors **54**. The hot wire cutter assembly **50** is typically mounted on a table assembly **56** whereupon polymeric foamed material **12** is placed to be hot wire cut. The hot wire cutter assembly **50** includes at least one wire **58** for receiving current to be heated and to be moved for cutting and searing proposes in accordance with commands from the computer **52**, or from manual commands.

The hot wire cutter assembly **50** may be any suitable hot wire cutter assembly that is capable of cutting the desired slots (e.g. generally C-shaped or Z-shaped slots **30** and generally vertical or straight thread-like slots **70**, etc.) and openings (e.g. polymeric openings **17**, etc.) in the polymeric foamed material **12**. A suitable hot wire cutter assembly **50** is commercially available from Starr Mfg., Inc., a division of Starr Foam, Inc. of Fort Worth, Tex. The computer **52** to operate the hot wire cutter assembly **50** may also be obtained from Starr Mfg., Inc. The wire(s) **58** of the hot wire cutter assembly **50** preferably has a diameter ranging from about 0.03 inch to about 0.07 inch, more preferably from about 0.04 inch to about 0.06 inch. The wire(s) **58** typically receives less than approximately ten (10) amps at a difference of potential of about 110 volts. At a difference in potential of about 220 volts the wire(s) **58** would receive less than about five (5) amps. It is to be understood that the wire **58** may have any suitable diameter, and operate at any suitable voltage or amperage, for practicing the present invention.

Referring in detail now to FIGS. **15–18**, there is seen another embodiment for the hot wire cutter assembly **50** as comprising a plurality of wires **58** for cutting through a block, generally illustrated as **8**, of polymeric foamed material **12**. The hot wire cutter assembly **50** is available commercially from HP Machine, 1600 West Acoma Blvd., Lake Havasu, Ariz. 86403, under product model number: Model S-TEL-9000 CNC. The hot wire cutter assembly **50** includes a table assembly, generally illustrated as **120**, upon which the block **8** of polymeric foamed material **12** lies while movement of the plurality of wires **58** during the cutting procedure are controlled by a computer control assembly **200** (see FIG. **18**). The wires **58** of the hot wire cutter assembly **50** for the embodiment of the invention shown in FIGS. **15–18** preferably have a diameter ranging from about 0.03 inch to about 0.07 inch, more preferably from about 0.04 inch to about 0.06 inch. The wires **58** typically receive less than approximately ten (10) amps at a difference of potential of about 110 volts. At a difference in potential of about 220 volts the wires **58** would receive less than about five (5) amps. It is to be understood that the wires **58** may have any suitable diameter, and operate at any suitable voltage or amperage, for practicing the present invention.

The table assembly **120** includes a table **124** having a pair of generally identical horizontal track assemblies **128—128** connected thereto. A horizontal trolley assembly **130** is slidably mounted to each of the horizontal track assemblies **128**. Only one of the horizontal trolley assemblies **130** is shown in FIG. **16**, with the other horizontal trolley assembly **130** (not shown) being broadly referenced by a broken-line arrow from **130**. The table assembly **120** also includes a support harp **134** having a horizontal support section **136** and a pair of opposed vertical support sections **138—138** integrally bound to the horizontal support section **136**. As best shown in FIG. **17**, the respective vertical support sections **138** are supported respectively by one of the horizontal trolley assemblies **130** such that when both of the horizontal trolley assemblies **130—130** move in a certain horizontal direction, the support harp **134** also moves in the same horizontal direction. Each of the vertical support sections **138** slidably supports a vertical trolley assembly **150** to which the plurality of wires **58** couple such that when the vertical trolley assemblies **150—150** are moved by the computer control assembly **200** in a certain vertical direction, the plurality of wires **58** move accordingly in the same vertical direction. Thus, computer control assembly **200** for the present invention, may move the wires **58** either horizontally or vertically, or both horizontally and vertically simultaneously to form any desired shape for the slots **30** or form the cylindrical shaped polymeric openings **15**, **17** and **25**.

The horizontal track assemblies **128** each include a main table frame **154** having a horizontal trolley track **156** as best shown in FIG. **17**. As further best shown in FIG. **17**, the horizontal trolley assembly **130** comprises a horizontal trolley **160** slidably mounted along the horizontal trolley track **158**, a horizontal locking assembly **164** for locking the horizontal trolley **160**, and a drive brace **168** bound to the horizontal trolley **160** and coupled to a horizontal drive cable **170** such that when the horizontal drive cable **170** is moved in a certain horizontal direction by hand or by a motor (identified as "M_H" below), the drive brace **168** also moves, causing the horizontal trolley **160** to also move, in the same certain horizontal direction. The horizontal drive cable **170** is also similarly engaged and coupled to the other horizontal trolley assembly **130** (not shown) through a series of pulleys (not shown) underneath the table **124** such that

both horizontal trolley assemblies **130—130** are capable of being moved in unison and in the same horizontal direction by a motor (identified as "M_H" below). As was previously indicated, when the horizontal trolley assemblies **130—130** are moved in a certain horizontal direction, the support harp **134** (and the wires **58**) also moves in the same certain horizontal direction.

Each of the vertical trolley assemblies **150** include a sleeve **174** movably engaged to one of the vertical support sections **138** of the support harp **138**, as best shown in FIGS. **16** and **17**. Each of the vertical trolley assemblies **150** have a manual actuation knob **176**, a vertical locking mechanism **178**, and a vertical drive cable **180** coupled to the sleeve **174**. The plurality of wires **58** are coupled to the sleeve **174** such as to move vertically therewith. When the vertical drive cable **180** is moved in a certain vertical direction by a motor (identified as "M_V" below), the sleeve **174** (along with the plurality of wires **58** coupled thereto) also moves in the same certain vertical direction. The vertical drive cable **180** is also similarly engaged and coupled to the sleeve **174** of the other vertical trolley assembly **150** through a series of pulleys (not shown) such that both vertical trolley assemblies **150—150** are capable of being moved in unison and in the same vertical direction by hand or by a motor (identified as "M_V" below). As previously mentioned, when the vertical trolley assemblies **150—150** are moved in a certain vertical direction along the vertical support section **138** of the support harp **134**, the wires **58** also move in the same certain vertical direction. As best shown in FIG. **17**, an electrical conductor **186** is coupled to the wires **58** and communicates with a power source for conducting electrical power from the power source to the wires **58** for heating the same.

Referring now to FIG. **18** for the computer assembly **200** of the present invention, there is seen the computer **52** electrically engaged to a CNC controller **210** via at least one conductor **214**. CNC controller **210** is electrically engaged to motor $M_V$to motor M_H and to power box **220** via conductor **222**, conductor **224**, and conductor **228** respectively. Power box **220** communicates with a power source through at least one conductor **230** for receiving electrical power and administering the same to the CNC controller **210** through conductor **228**. Through a program in the computer **52**, appropriate signals are sent to the CNC controller **210** which in turn releases and/or allocates electrical power to the two motors M_V and M_H based on the signals received from the computer **52**. As was previously indicated, the motors M_V and M_H respectively control the vertical and horizontal movement of the wires **58** by moving the vertical trolley assemblies **150** and the horizontal trolley assemblies **130** respectively. The computer control assembly **200** is available commercially from HP Machine, 1600 West Acoma Blvd., Lake Havasu, Ariz. 86403.

Continuing to refer to the drawings for operation of the invention and the method for producing the panel **10**, the polymeric foamed material **12** is placed upon the table assembly **56** and under (i.e. laterally adjacent to) the wire **58** of the hot wire cutter assembly **50**. While operation of the invention is being initially illustrated with respect to a wire cutter assembly **50** having a single wire **58**, a wire cutter assembly **50** having a plurality of wires **58** would operate similarly. Commands are entered into the computer **52** and the wire **58** is heated to a desired temperature (e.g. from about 230° F. to about 580° F., preferably from about 250° F. to about 350° F.) and the now hot wire **58** is lowered against the surface **74** and commences to cut and/or burn and/or melt back the polymeric foamed material **12** to produce the generally straight thread-like vertical slot **70**. The slot **70** is continually formed or produced until the hot wire **58** reaches point **72** (see FIG. **9**) whereupon the computer **52** sends another signal to the hot wire cutter assembly **50**, causing the hot wire **58** to be moved in an essentially generally C-shaped path (as represented by dotted lines in FIG. **9**) to produce an essentially generally C-shaped slot **30**. One or more of these slot(s) **30** may be formed in the polymeric foamed material **12** such as to terminate in the pair of opposed ends **12***f* and **12***g* of polymeric foamed material **12** (see FIGS. **10** and **19**). As best shown in FIG. **10**, two slot(s) **30** were produced in the polymeric foamed material **12**.

After the hot wire **58** has cut the slot(s) **30** and **70**, the cutting path(s) is reversed by commands from the computer **52** such that the hot wire **58** reversely retraces its initial cutting path(s), which reverse retracing typically causes more burning and/or melt back of polymeric foamed material **12** contiguous to the slot(s) **30** and **70**. In reverse retracing of its initial cutting path, the hot wire **58** is "cleaning out" the slot(s) **30** and slot(s) **70** that terminate in slot(s) **30** for further defining the slot(s) **30** and **70**, especially slot **30** which is of an opening between opposed perimetrical boundaries approximating the thickness of the brace member **14** for snugly receiving the brace member **14** to essentially fully encapsulate the same. Preferably, slot(s) **30** have openings that are greater than the opening of slot(s) **70** that terminate in slot(s) **30**. In reverse retracing of its initial cutting path(s), the hot wire **58** further sears and/or cartherizes the seared wall(s) **32** of the slot(s) **70** and **30** to further harden and smooth the same. After the hot wire **58** has reversely retraced its initial cutting path(s), the hot wire **58** exits out of slot **70** that terminates in slot **30** and is subsequently elevated above the surface **74**.

After forming the desired number of slot(s) **30**, the polymeric foamed material **12** is subsequently preferably rotated on top of the table assembly **56** in order to posture the polymeric foamed material **12** for formation of the polymeric opening(s) **17**. This obviously is an optional step since there are times that the polymeric foamed material panel **10** is to be produced without any polymeric opening(s) **17**. The amount of rotation of the polymeric foamed material **12** for forming polymeric opening(s) **17** would be any suitable amount to accomplish the desired cutting results. Preferably, for a square or rectangular shaped polymeric foamed material **12** as shown in FIGS. **9** and **10**, the rotation would be approximately 90° such that the polymeric opening **17** to be formed would be generally normal to the slot(s) **30**.

In forming the polymeric opening **17**, the hot wire **58** is lowered by the hot wire cutter assembly **50** against the surface **74** and another slot **70** is commenced to be cut by the hot wire **58**. The slot **70** is continually cut until a point **72** (i.e. a preconfiguration cut point **72**) is again reached whereupon the computer signals the hot wire cutter assembly **50** to move the hot wire **58** in a circular fashion or manner to cut and/or burn and/or melt back polymeric foamed material **12** such that when the core material **12A** is removed, the polymeric opening **17** is produced with slot **70** terminating in polymeric opening **17**. As previously indicated, removal of the core material **12A** may be by any suitable means including manual removal of it.

As was seen in the production of slot(s) **30** and **70**, after the hot wire **58** has cut polymeric opening **17** (i.e. cylindrical polymeric opening **17**) and slot(s) **70** that terminate in polymeric opening(s) **17**, the cutting path(s) (e.g. a cylindrical cutting path) is reversed by commands from the computer **52** such that the hot wire **58** reversely retraces its

initial cutting path(s) in the formation of polymeric opening **17**. Such reverse retracing causes more burning and/or melt back of polymeric foamed material **12** contiguously or juxtaposedly exposed on the initially seared wall(s) **32** of the polymeric opening **17** and the slot(s) **70**. In reverse retracing of its initial cutting path(s), the hot wire **58** is also further searing and/or cartherizing the wall (i.e. the cylindrical wall) around the core material **12**A to further smooth and harden the same to facilitate the removal of the core material **12**A. As was previously indicated for the formation of slot(s) **30**, by reversely retracing its initial cutting path(s), the hot wire **58** is "cleaning out" the polymeric opening(s) **17** and slot(s) **70** terminating in polymeric opening(s) **17** for further defining polymeric opening(s) **17** and slot(s) **70**, especially the polymeric opening(s) **17** which for cylindrical polymeric opening(s) **17** have a diameter that approximates the diameter of conduit **16** for snugly receiving conduit **16** to essentially fully encapsulate the same. Also by reverse retracing of its initial cutting path(s), the hot wire **58** further sears and/or cartherizes the seared wall(s) **32** of polymeric opening(s) **17** and the slot(s) **70** terminating in the polymeric opening (s) **17** to further harden and smooth the same. After the hot wire **58** has reversely retraced its initial cutting path(s) in the formation of polymeric opening(s) **17**, the hot wire **58** exits out of the slot **70** terminating in the polymeric opening **17** and is then elevated above the surface **74**.

After the core material **12**A has been removed from polymeric opening **17**, the brace member **14** (see FIG. **10**) is aligned with the general C-shaped slot **30** (see FIG. **10**) and is subsequently pushed into the cut slot **30** such that the brace member **14** would preferably extend from one extremity of the polymeric foamed material **12** to another extremity of the polymeric foamed material **12**. In order words, it is preferred that the brace member **14** extends entirely through the polymeric foamed material **12** such that ends of the brace member **14** are exposed at opposed ends **12***f* and **12***g* of the polymeric foamed material **12**. This enables a more optimal load-bearing function for the brace members **14**. Each brace member **14** is preferably inserted into each slot **30**.

The brace members **14** may be typically provided with the opening (s) **18** which is capable of being aligned with the polymeric opening(s) **17** when and after the brace member (s) **14** are slid into the slot(s) **30** (i.e. preferably generally C-shaped slot(s) **30**) in the polymeric foamed material **12**. After such alignment, one or more panels **10** may be sent to a construction site such that two or more of the panel(s) **10** may be combined in any desired manner (e.g. contiguous as shown in FIGS. **4** and **5** or aligned as shown in FIG. **13**) to produce a structure **40**. When postured in an alignment in accordance with FIG. **13**, the conduit **16** may be slid through the polymeric opening(s) **17** and through the opening(s) **18** (see FIG. **1**) in the brace member(s) **14**, preferably such that the conduit **16** is supported by the polymeric foamed material **12** in the two or more panels **10** and preferably such that the conduit **16** does not contact any perimeter of the opening (s) **18** in the brace member(s) **14**.

The tongue **24** and the channel **26** may be cut in the opposed ends **20** and **22** of the polymeric foamed material **12** at any desired time. More specifically, the tongue **24** and the channel **26** may be cut after the generally C-shaped slot(s) **30** and polymeric opening(s) **17** have been cut in the polymeric foamed material **12**, or the tongue **24** and the channel **26** may be cut before the generally C-shaped slot(s) **30** and polymeric opening(s) have been cut in the polymeric foamed material **12**. After the tongue **24** and the channel **26** have been formed, any wall(s) that the hot wire **58** has contacted is or becomes seared wall(s) **32**. Thus, the wall(s) of the channel **26** and the tongue **24** are seared wall(s) **32**.

Continuing to refer to the drawings for operation of another preferred embodiment of the present invention including the method(s) for producing the panel **10**, the block **8** of the polymeric foamed material **12** is placed upon the table **124** of the table assembly **120** and next (i.e. laterally adjacent) to the wires **58** of the hot wire cutter assembly **50**. The wires **58** are positioned along a side **8***s* (i.e. a surface or a side surface or a defined surface or a defined side surface, see FIGS. **15** and **16**) of the block **8** of the polymeric foamed material **8**. The wires **58** are heated to a desired temperature (e.g. from about 230° F. to about 580° F.). The computer control assembly **200** may be programmed to cause the motors M_H and M_V to move the wires **58** in any desired direction for any desired distance such that a plurality of panels **10** may be produced from the block **8** of polymeric foamed material **12**. Preferably, the wires **58** are caused to be initially moved by the computer control assembly **200** to cut a plurality of tongues **24** in the side **8***s* of the block **8** of polymeric foamed material **8**. After the tongues **24** have been formed (see FIGS. **15** and **16**), the wires **58** are caused to be moved by the computer control assembly **200** to subsequently cut a plurality of slots **30** in the block **8** of polymeric foamed material **12** and to sever the block **8** into a plurality of polymeric foamed materials **12** (i.e. a plurality of polymeric foamed material structures **12***s* shown in FIG. **19**), with each polymeric foamed material structure **12***s* having a plurality of slots **30**, and preferably, at least one polymeric foamed material opening **15**. Thus, and as best shown in FIG. **19**, between the formation of two particular adjacent slots **30**, the polymeric foamed material opening **15** (including slot **70**) was cut; and between the formation of the left extreme slot **30** and right extreme slot **30** in FIG. **19** (or the two opposed slots **30** respectively adjacent to channel **26** and tongue **24** in FIG. **19**) the polymeric material opening **15** (including slot **70**) along with a slot **30** (i.e. the slot **30** between the left extreme slot **30** and the right extreme slot **30**) was cut or formed.

The slots **30** may be of any desired shape or configuration to receive a comparable shaped or configured stud or brace **14**. Preferably, the slots are generally C-shaped, as shown in FIG. **19** and FIG. **32**. Alternatively and preferably further, the slots **30** may be partially Z-shaped (see FIG. **29**) to partially receive a Z-shaped brace **14** such that when a Z-shaped brace **14** is slid into the partially Z-shaped slot **30**, a portion of Z-shaped brace **14** protrudes away from the polymeric foamed material **12**, as best shown in FIG. **30**. The slots **30** may be partially C-shaped (see FIG. **26**) to partially receive a C-shaped brace **14** such that when a C-shaped brace **14** is slid into the partially C-shaped slot **30**, a portion of the C-shaped brace **14** protrudes away from the polymeric foamed material **12**, as best shown in FIGS. **27** and **28**B. The polymeric openings **15** are preferably cylindrical openings for receiving the conduits **19**.

After the slots **30** and polymeric openings **15** have been cut and the plurality of polymeric foamed material structures **12***s* have been produced (see FIG. **19**) from the block **8** of polymeric foamed material **12**, the computer control assembly **200** preferably causes the wires **58** to be moved to cut a plurality of channels **26** in the side of the block **8** of the polymeric foamed material **12** opposed to the side **8***s*. Subsequently, the plurality of polymeric foamed material structures **12***s*, while remaining in a stacked or superimposed relationship, are rotated 90 degrees to posture the stacked polymeric foamed material structures **12***s* for formation of the track chases **100** and the transverse polymeric opening(s) **17** and **25** if desired. The wires **58** are moved by computer control assembly **200** such that the track chases

100 are formed in each of the polymeric foamed material structures 12*s* at any desired location, preferably at the location shown in FIGS. 25–31. The transverse polymeric openings 17 may be formed in the respective polymeric foamed material structures 12*s* by passing each wire 58 in an initially cut path between any two superimposed polymeric foamed material structures 12*s*—12*s* and either raising or lowering the wire 58 against the respective surface 74 (e.g. see FIG. 10) of a respective polymeric foamed material structure 12*s* and respective slots 70 are commenced to be cut by each of the hot wires 58. The respective slots 70*s* are continually cut until respective points 72 (i.e. preconfiguration cut points 72) are reached whereupon the computer 52 signals the hot wire cutter assembly 50 to move the hot wires 58 in a circular fashion or manner to cut and/or burn and/or melt back polymeric foamed material 12 such that when respective core materials 12A are removed, the polymeric opening 17 is produced in each of the polymeric foamed material structures 12*s* with a respective slot 70 terminating in a respective polymeric opening 17. As previously indicated, removal of the core material 12A may be by any suitable means including manual removal of it. Polymeric openings 25 may be formed in the same manner after a core material (not shown, but similar to core material 12A) has been removed. As was previously indicated, conduits 16 and internal reinforcing member 23 are to be respectively inserted into the polymeric openings 17 and into the polymeric openings 25.

Referring now to FIGS. 19–25 for the procedure of cutting generally C-shaped slots 30 as shown in the respective polymeric foamed material structures 12*s*, the plurality of hot: wires 58 are moved by the computer control assembly 200 in direction of the arrow 300 (see FIG. 20) for a desired distance. The wires 58 are then moved in direction of the arrow 302 (which is preferably normal to the direction of the arrow 300) for a distance which approximates the length of a flange return 14*r* of a generally C-shaped brace member 14. Wires 58 are subsequently moved a predetermined distance L (see FIG. 24) in direction of the arrow 304 into an off-set position. The distance L is preferably equal to about the measurement of the diameter D (see FIG. 23) of one of the wires 58. The direction of the arrow 304 is preferably a direction which is generally perpendicular to direction of arrow 302. From the off-set position the wires 58 move in direction of the arrow 306 for a distance which is less than distance that the wires 58 moved when travelling in direction of the arrow 302. When the wires 58 are travelling in direction of the arrow 306, they are forming an off-set path next to the path that the wires 58 formed in travelling the direction of arrow 302. The width W of the off-set path is approximately equal to twice the measurement of the diameter D of the wires 58 (see FIG. 24).

After travelling a distance in direction of the arrow 306 which is less than the distance that the wires travelled in direction of the arrow 302, the wires 58 travel in direction of the arrow 308 (see FIG. 20 again). The direction of the arrow 308 is generally normal to the direction of the arrow 306. After travelling a desired distance along a path in direction of the arrow 308, the wires are then moved by the computer control assembly 200 in direction of the arrow 310. It should be understood that the distance that the wires 58 travelled in direction of the arrow 308 is approximately equal to the length of a flange 14*f* of a generally C-shaped brace member 14. The distance that the wires 58 travelled in direction of the arrows 308 is also approximately equal to the width of a polymeric material crest 12*c* (see FIG. 20B), with the height of the polymeric material crest 12*c* resulting from the wires 58 travelling at a distance in direction of the arrow 306 that is less than the distance that the arrows travelled in direction of the arrows 302. Polymeric material crest 12*c* also results from a polymeric material recess 12*r* being formed (see FIG. 20B again).

The wires 58 travel a distance in direction of the arrow 310, which distance is approximately equal to the length of a web 14*f* of a generally C-shaped brace member 14. From the direction of the arrow 310, the wires 58 travel in direction of the arrow 312 for a distance that approximately equals the distance that the wires 58 travelled in direction of the arrow 308. The direction of the arrow 312 is generally perpendicular to the direction of the arrow 310. The wires 58 subsequently travel in direction of the arrow 314 for a distance that approximately equals the distance that the wires 58 travelled in direction of the arrow 306. From direction of the arrow 314, the wires 58 are then moved in direction of the arrow 316 for a predetermined distance which is preferably equal to the predetermined distance L (see FIG. 24). The wires 58 are now in another off-set position. From this off-set position, the wires 58 generally retrace the path that the wires 58 cut when moving in direction of the arrows 310, 312 and 314. While retracing this path, the wires 58 remain in the off-set position. In retracing the path that the wires 58 made when moving in direction of the arrows 310, 312 and 314, the wires 58 move in direction of the arrows 318, 320 and 322, as best shown in FIG. 20. The distance that the wires 58 travel in direction of the arrow 318 is generally equal to the distance that the wires 58 travelled when travelling in the direction of the arrow 302. The direction of the arrow 320 is generally normal to the direction of arrows 318 and 322. After having moved in direction of the arrows 318, 320 and 322 to form an off-set path next to the path that the wires 58 formed when moving in direction of the arrows 310, 312, and 314, the wires 58 then move in direction of the arrow 324. The generally C-shaped slot 30 of FIGS. 19, 20, and 25 has now been formed.

By the practice of the present invention there is provided a method for producing the polymeric foamed material panel 10 (e.g. a low density synthetic panel) comprising the steps of: (a) providing the polymeric foamed material 12; (b) cutting (e.g. with one or more wires 58) the polymeric foamed material 12 of step (a) until reaching the preconfiguration cut point 72; (c) cutting subsequently from the preconfiguration cut point 72 the brace-receiving configuration (i.e. the slot 30) in the polymeric foamed material 12; and (d) sliding the brace member into the brace-receiving configuration (or the slot 30) to produce the polymeric foamed material panel 10. The cutting in step (b) and the cutting in step (c) comprises cutting the polymeric foamed material 12 of step (a) with the hot wire cutter assembly 50 which is preferably operated by the computer 52. The cutters may also be laser cutters. If hot wires 58 are used as cutters for forming respective slots 30, the walls or cut surfaces (i.e. cut surfaces $30w_c$, $30f_c$, and $30r_{1c}$) would be seared surfaces. The brace-receiving configuration in the polymeric foamed material 12 preferably comprises the slot 30 for receiving the brace member 14. The slot 30 includes at least one seared wall 32 for facilitating the sliding of the brace member 14. The brace member 14 includes the opening 18 with an opening perimeter. The method additionally comprises forming the polymeric (foamed material) opening 17 in the polymeric foamed material 12. The polymeric foamed material opening 17 has a polymeric foamed material opening perimeter. The sliding in step (d) comprises sliding the brace member 14 into the brace-receiving configuration until the

opening **18** of the brace member **14** is generally aligned with the polymeric (foamed material) opening **17**. The opening perimeter of the opening **18** in the brace member **14** has a dimension that is greater than **4** dimension of the polymeric foamed material opening perimeter of the polymeric (foamed material) opening **17** in the polymeric foamed material **12**.

By the practice of the present invention there is further provided a method for forming a structure **40** comprising the steps of: (a) providing a first polymeric foamed material **12** having a first defined edge **20** (i.e. end **20**); (b) cutting a first brace-receiving-configured slot **30** in the first polymeric foamed material **12**; (c) cutting the first defined edge **20** of the first polymeric foamed material **12** to form the tongue **24** on the first defined edge **20**; (d) sliding a first brace member **14** into the first brace-receiving-configured slot **30**; (e) providing a second polymeric foamed material **12** having a second defined edge **22** (i.e. end **22**); (f) cutting a second brace-receiving-configured slot **30** in the second polymeric foamed material **12**; (g) cutting the second defined edge **22** of the second polymeric foamed material **12** to form the channel **26** in the second defined edge **22**; (h) sliding the second brace member **14** into the second brace-receiving-configured slot **30**; and (i) sliding the tongue **24** on the first defined edge **20** of the first polymeric foamed material **12** into the channel **26** in the second defined edge **22** of the second polymeric foamed material **12** to form the structure **40**.

By the further practice of the present invention there is also provided a polymeric foamed material panel **10** comprising a panel **10** consisting of the polymeric foamed material **12**; a brace-receiving-configured slot (i.e. slot **30** preferably) disposed in the polymeric foamed material **12** of the panel **10** and a brace member **14** disposed in the brace-receiving-configured slot **30** in the polymeric foamed material **12** of the panel **10**. The preferred brace-receiving-configured slot **30** includes at least one seared wall **32**; typically all walls of the slot **30** are seared. The polymeric foamed material panel **10** additionally comprises a generally straight thread-like slot **70** extending from a defined surface **74** of the polymeric foamed material **12** to the brace-receiving-configured slot **30**; and a second generally straight thread-like slot **70** extending from the defined surface **74** of the polymeric foamed material **12** to a generally cylindrical polymeric opening **17** in the polymeric foamed material **12**. All walls of the polymeric opening **17** are typically seared.

Practice of the present invention also provides method for producing a plurality of polymeric foamed material panels **10** comprising the steps of: (a) providing a block **8** of polymeric foamed material **12**; (b) cutting the polymeric foamed material **12** with a plurality of cutters (e.g. laser cutters or hot wires **58**) until each cutter reaches a respective preconfiguration cut point (i.e. preconfiguration cut point **72**); (c) cutting subsequently with each cutter from the respective preconfiguration cut point of each cutter a respective brace-receiving slot **30** in the polymeric foamed material **12**; (d) cutting then the polymeric foamed material **12** with the plurality of cutters to produce a plurality of polymeric foamed material structures **12***s* having a plurality of brace-receiving slots **30**; and (e) sliding a plurality of brace members **14** into the brace-receiving slots **30** of the polymeric foamed material structures **12***s* to produce a plurality of polymeric foamed material panels **10**, each of the polymeric foamed material panels **10** having at least one of the brace members **14**. This method additionally comprises cutting with each cutter a respective polymeric foamed material opening (e.g. opening **15**, **17** or **25**) in the polymeric foamed material **12** such that each polymeric foamed material structure **12***s* has a polymeric foamed material opening (e.g. opening **15**, **17** or **25**) to define a chase. The cutters are preferably computer operated to provide desired cut accuracy.

Another practice of the present invention provides a method for producing a plurality of polymeric foamed material panels **10** comprising the steps of: (a) providing a block **8** (e.g., a generally stationary block) of polymeric foamed material **12** (e.g., expanded polystyrene (EPS)); (b) cutting the polymeric foamed material **12** with a plurality of cutters (e.g., hot wire cutters, laser cutter, etc.) until each cutter reaches a respective preconfiguration cut point **72**; (c) cutting subsequently with each cutter from the respective preconfiguration cut point **72** of each cutter a respective brace-receiving slot **30** in the polymeric foamed material **12**; (d) cutting then the polymeric foamed material **12** with said plurality of cutters to produce a plurality of polymeric foamed material structures **12***s* having a plurality of brace-receiving slots **30**, which may be linear or nonlinear slots; and (e) sliding a plurality of brace members **14** into the brace-receiving slots **30** of the polymeric foamed material structures **12***s* to produce a plurality of polymeric foamed material panels **10**, each of the polymeric foamed material panels **10** having at least one of the brace members **14**. In the immediate foregoing method of the present invention, the brace members **14** include sides. More particularly, each of the brace members **14** preferably comprises the web **14***w*, the flanges **14***f*—**14***f* integrally bound to the web **14***w*, and the flange returns **14***r* —**14***r* integrally bound to the flanges **14***f*—**14***f*. The web **14***w*, the flanges **14***f*—**14***f*, and the flange returns **14***r* —**14***r* are surrounded by the polymeric foamed material **12**. Alternatively and as another embodiment of the present invention, a portion of at least one brace member **14** protrudes from each of the polymeric foamed material panels **10**. Therefore, the sliding step (e) in the immediate foregoing method more specifically comprises sliding one of the flanges **14***f* and flange return **14***r* associated therewith, and a portion of the web **14***w* of respective brace members **14** into respective brace-receiving slots **30** of the polymeric foamed material structures **12***s* to produce the plurality of polymeric foamed material panels **10**, with each of the polymeric foamed material panels **10** having the other flange **14***f* and the flange return **14***r* associated therewith, and a portion of the web **14***w* of at least one of the brace members **14** disposed outside thereof.

An alternative practice of the present invention provides a method for producing a plurality of polymeric foamed material structures **12***s* having slots **30** for receiving stud members **14** comprising the steps of: (a) cutting a polymeric foamed material **12** (e.g., a generally stationary block **8** of expanded polystyrene (ESP)) with a plurality of cutters, such as hot wire cutters or laser cutters, in a first direction (e.g. in direction of the arrow **300** in FIG. **20**); (b) cutting subsequently in a second direction (e.g. in direction of the arrow **302** or arrow **310** in FIG. **20**) the polymeric foamed material **12** with the plurality of cutters until each cutter forms a first respective slot in the polymeric foamed material **12**; (c) cutting in the first direction the polymeric foamed material **12** with the plurality of cutters to produce a plurality of polymeric foamed material structures **12***s* having a plurality of first slots (e.g. slot sections $30r_1$ in FIG. **20** including opposed cut surfaces $30r_{1c}$—$30r_{1c}$) which may be linear or nonlinear slots. The immediately foregoing method broadly additionally comprises cutting the polymeric foamed material **12** with the plurality of cutters until each cutter forms a second respective slot (e.g. slot section **30***s* in

FIG. 20 including opposed cut surfaces $30w_c$—$30w_c$) in the polymeric foamed material 12. The immediate foregoing method more particularly additionally comprises cutting the polymeric foamed material 12 with the plurality of cutters until each cutter forms a respective recess (e.g. polymeric material recess 12*r* in FIG. 20 including cut surface $12r_c$) in the polymeric foamed material 12; and subsequently cutting the polymeric foamed material 12 with the plurality of cutters until each cutter forms a second respective slot (e.g. slot sections 30*s* in FIG. 20 including opposed cut surfaces $30w_c$—$30w_c$) in the polymeric foamed material 12 such that after cutting, a plurality of polymeric foamed material structures are produced having a plurality of first slots (e.g. slot sections $30r_1$ including opposed cut surfaces $30r_{1c}$—$30r_{1c}$) and a plurality of second slots (e.g. slot sections 30*s* including opposed cut surfaces $30s_c$—$30s_c$) and a plurality of recesses (e.g. polymeric material recesses 12*r* including cut surfaces $12r_c$). A plurality of stud members 14 is provided wherein each of the stud members 14 comprises a web 14*w*, a first flange 14*f* integrally bound to the web 14*w*, a first flange return 14*r* integrally bound to the first flange 14*f*, a second flange 14*f* also integrally bound to the web 14*w*, and a second flange return 14*r* integrally bound to the second flange 14*f*. The stud members 14 are slid into the first and second slots and into the recesses of the polymeric foamed material structures 12*s*, such that after the sliding step, the first flange return 14*r* and the first flange 14*f* of each of the stud members 14 occupies respectively one of the first slots (e.g. slot sections $30r_1$ and against opposed cut surfaces $30r_{1c}$ and $30r_{1c}$) and one of the recesses (e.g. polymeric material recess 12*r* and against cut surface $12r_c$) of the polymeric foamed material structures 12*s*, and the web 14*w*, the second flange 14*f* and the second flange return 14*r* of each of the stud members 14 occupies one of the second slots (e.g. slot section 30*s* and against opposed cut surfaces $30w_c$ and $30w_c$) of the polymeric foamed material structures 12*s*. The cutters are preferably computer operated to provide the desired cut accuracy during the cutting steps.

Other features in alternative practices of the present invention include interrupting the movement of a plurality of cutters in a first direction of travel to move the cutters in at least one direction of travel which differs from the first direction of travel in order to form one or more brace-receiving slots. These features are embodied in a method for producing a plurality of polymeric foamed material structures 12*s* having brace-receiving slots 30 comprising the steps of: (a) providing a block 8 of polymeric foamed material 12; and (b) moving a plurality of cutters through the block 8 of polymeric foamed material in a first direction (e.g. in direction of arrow 300 in FIG. 20) of travel, while interrupting at least one time the moving of the plurality of cutters in the first direction of travel to move the cutters through the block 8 of polymeric foamed material 12 in at least one direction of travel (e.g. in direction of arrow 302 or arrow 310 in FIG. 20) which differs from the first direction of travel, such that each cutter produces a respective brace-receiving slot 30 in the polymeric foamed material 12, until the plurality of cutters have moved completely through the block 8 of polymeric foamed material 12 to produce a plurality of polymeric foamed material structures 12*s* with each structure 12*s* having at least one brace-receiving slot (e.g. slot sections 30*s* and/or $30r_1$ in FIG. 20 and respectively including opposed cut surfaces $30w_c$ and $30w_c$ and/or including opposed cut surfaces $30r_{1c}$ and $30r_{1c}$). These features are also embodied in a method for producing a plurality of polymeric foamed material structures 12*s* having brace-receiving slots comprising the steps of: (a) providing a block 8 of polymeric foamed material 12 in a generally stationary position; (b) moving a plurality of cutters through the generally stationary block 8 of polymeric foamed material 12 in a first direction of travel (e.g. in direction of arrow 300 in FIG. 20); (c) interrupting the movement of the plurality of cutters from the first direction of travel through the generally stationary block 8 of polymeric foamed material 12 to move the cutters in at least one direction of travel (e.g. in direction of the arrow 302 in FIG. 20) which differs from the first direction of travel such that each cutter produces a respective brace-receiving slot (e.g. slot section $30r_1$ in FIG. 20 including opposed cut surfaces $30r_{1c}$ and $30r_{1c}$) in the polymeric foamed material 12, and (d) continuing the moving of the plurality of cutters in the first direction of travel, while intermittently interrupting the movement of the plurality of cutters from the first direction of travel to move the cutters in at least one direction of travel (e.g. in direction of the arrow 310 in FIG. 20) which differs from the first direction of travel such that each cutter produces at least one additional respective brace-receiving slot (e.g. slot section 30*s* in FIG. 20 including opposed cut surfaces $30w_c$ and $30w_c$) in the polymeric foamed material 12, until the plurality of cutters have moved completely through the generally stationary block 8 of polymeric foamed material 12 after which a plurality of polymeric foamed material structures 12*s* are produced with each polymeric foamed material structure 12*s* having a plurality of brace-receiving slots (e.g. slot sections 30*s* and/or $30r_1$ in FIG. 20 and respectively including opposed cut surfaces $30w_c$ and $30w_c$ and/or including opposed cut surfaces $30r_{1c}$ and $30r_{1c}$).

In additional practices of the present invention there is broadly provided a method for producing a polymeric foamed material structure 12*s* having a slot (e.g. slot section $30r_1$ in FIG. 20 including opposed cut surfaces $30r_{1c}$ and $30r_{1c}$) comprising the steps of: (a) cutting with a cutter a polymeric foamed material 12 until reaching a preslot cut point (e.g. the point where the hot wire 58 stops after being moved in direction of the arrow 300 in FIG. 20); (b) cutting subsequently a first path in the polymeric foamed material 12 with the cutter from the preslot cut point until reaching a first cut point (e.g. the point where the hot wire 58 stops after being moved in direction of the arrow 302 in FIG. 20); (c) moving the cutter in the polymeric foamed material 12 a predetermined distance (e.g. distance L in FIG. 24) from the first cut point to a second cut point (e.g. the point where the hot wire 58 stops after being moved in direction of the arrow 304 in FIGS. 20 and 24); and (d) cutting subsequently from the second cut point a second path (e.g. an off-set path) in the polymeric foamed material 12 with the cutter until the cutter reaches a postslot cut point (e.g. the point where the hot wire 58 stops after being moved in direction of the arrow 306 in FIGS. 20 and 24) to produce a polymeric foamed material structure 12*s* having a slot (e.g. slot section $30r_1$ in FIG. 20 including opposed cut surfaces $30r_{1c}$ and $30r_{1c}$). In the immediate foregoing method of the present invention, the cutter is preferably a computer-operated hot wire cutter having a wire diameter D with a generally known diameter measurement, and the slot (e.g. slot section $30r_1$ in FIG. 20) has a width W equal to about twice the generally known diameter measurement of the wire diameter D, and a width W equal to about twice the predetermined distance (e.g. distance L in FIG. 24).

Further additional practices of the present invention broadly provide a method for producing at least one polymeric foamed material structure 12*s* having at least one slot (e.g. slot section 30*s* in FIG. 20 including opposed cut

surfaces **30**w_c and **30**w_c) comprising the steps of: (a) providing at least one cutter; (b) cutting with the cutter a polymeric foamed material **12** until the cutter reaches at least one respective preslot cut point (e.g. the point where the hot wire **58** stops after being moved in direction of the arrow **308** in FIG. **20**); (c) cutting subsequently with cutter from the respective preslot cut point at least one respective path in is the polymeric foamed material **12** until the cutter reaches at least one first cut point (e.g. the point where the hot wire **58** stops after being moved in direction of the arrows **310**, **312** and **314** in FIG. **20**); (d) forming with the cutter in the polymeric foamed material **12** at least one respective off-set path (e.g. the path taken by hot wire **58** in moving in direction of the arrows **318**, **320** and **322** in FIG. **20**) communicating with the respective path to form at least one slot (e.g. slot section **30***s* in FIG. **20** including opposed cut surfaces **30**w_c and **30**w_c) within the polymeric foamed material **12**; and (e) cutting subsequently the polymeric foamed material **12** with the cutter (e.g. in direction of the arrow **324** in FIG. **20**) until the cutter has cut through the polymeric foamed material **12**, producing at least one polymeric foamed structure **12***s* having at least one slot (e.g. slot section **30***s* in FIG. **20** including opposed cut surfaces **30**w_c and **30**w_c). In the immediate foregoing method, the at least one respective path has at least one respective path length, and the at least one respective off-set path communicates with the at least one respective path along the at least one respective path length of the at least one respective path, such that the at least one respective path and the least one respective off-set path together form the at least one slot (e.g. slot section **30***s* in FIG. **20** including opposed cut surfaces **30**w_c and **30**w_c) within the polymeric foamed material **12**.

Thus, practice of the present invention provides one or more polymeric foamed material panel(s) **10** which may be processed into any suitable blocks, for example, 4 feet by 4 feet by 24 feet. These blocks of polymeric foamed material **12** have been hot wired cut into an associated desired thickness as needed by the laminator/panel manufacturer. The polymeric foamed material panel(s) **10** of the present invention preferably encapsulate metal studs or braces **14** (as well as rafters if desired) in order to eliminate the need for plywood or OSB skins and the adhesives currently required in panel production. The metal studs **14** and rafters supply the structural engineering strength requirements.

The polymeric foamed material panel **10** becomes a pre-engineered "system" for building structures including, but not limited to, homes, apartments and commercial buildings or structures, as represented by structure(s) **40** in FIGS. **2** and **2A**. The polymeric foamed material panel(s) **10** of the present invention is an improvement over the prior art in that they become the structure, the insulation, and the substrate for the interior and exterior finishes. The polymeric foamed material panel(s) **10** and the method of the present invention are also an improvement over the prior art in that they provide a market ready product at a significantly lower cost by eliminating secondary processing steps. The polymeric foamed material panel(s) **10** may be used in tandem with traditional Stress Skin and Structural Panels when attachment of a specific product (e.g. asphalt shingles, etc.) to the panel(s) **10** requires a solid wood substrate.

While the present invention has been described herein with reference to particular embodiments thereof, a latitude of modification, various changes and substitutions are intended in the foregoing disclosure, and it will be appreciated that in some instances some features of the invention will be employed without a corresponding use of other features without departing from the scope and spirit of the invention as set forth. Therefore, many modifications may be made to adapt a particular situation or material to the teachings of the invention without departing from the essential scope and spirit of the present invention. It is intended that the invention not be limited to the particular embodiment disclosed as the best mode contemplated for carrying out this invention, but that the invention will include all embodiments and equivalents falling within the scope of the appended claims.

What is claimed is:

1. A method for producing a plurality of polymeric foamed material structures having seared surfaces for contacting brace members comprising the steps of:

a) providing a block of polymeric foamed material having a side and a pair of opposed ends;

b) cutting the block of polymeric foamed material with a plurality of hot wire cutters in a first direction generally perpendicular from said side of said block of polymeric foamed material;

c) cutting, immediately after said cutting step (b), the block of polymeric foamed material with the plurality of hot wire cutters in a second direction generally perpendicular from said first direction until each hot wire cutter forms in the polymeric foamed material a first respective cut seared surface terminating in said opposed ends of said block of polymeric foamed material;

d) cutting, immediately after said cutting step (c), the block of polymeric foamed material with the plurality of hot wire cutters in a third direction generally perpendicular from said second direction until each hot wire cutter forms in the polymeric foamed material a second respective cut seared surface terminating in said opposed ends of said block of said polymeric foamed material;

e) cutting the block of polymeric foamed material with the plurality of hot wire cutters in a fourth direction until each hot wire cutter forms in the polymeric foamed material a third respective cut seared surface terminating in said opposed ends of said block of polymeric foamed material;

f) cutting the block of polymeric foamed material with the plurality of hot wire cutters in a fifth direction until each hot wire cutter forms in the polymeric foamed material a fourth respective cut seared surface terminating in said opposed ends of said block of polymeric foamed material; and

g) cutting the block of polymeric foamed material with the plurality of hot wire cutters in a sixth direction to produce a plurality of polymeric foamed material structures, each of said polymeric foamed material structures having a first cut seared surface and a second cut seared surface for contacting a first brace member and a third cut seared surface and a fourth cut seared surface for contacting a second brace member.

2. The method of claim **1** additionally comprising cutting the block of polymeric foamed material with the plurality of hot wire cutters between said cutting step (d) and said cutting step (e).

3. The method of claim **2** additionally comprising cutting the block of polymeric foamed material with the plurality of hot wire cutters such that each of said polymeric foamed material structures has a tongue member and a channel member.

4. The method of claim **3** wherein said cutting step (g) is after said cutting step (f).

5. The method of claim 2 additionally comprising computer operating said hot wire cutters; and said block of polymeric foamed material is generally stationary; and said cutting step (c) additionally producing an opposed first respective cut seared surface terminating in said opposed ends of said block of polymeric foamed material and opposed to said first respective cut seared surface to form a first slot in each of said polymeric foamed material structures; and said cutting step (d) additionally producing an opposed second respective cut seared surface terminating in said opposed ends of said block of polymeric foamed material and opposed to said second respective cut seared surface to form a second slot in each of said polymeric foamed material structures, each of said polymeric foamed material structures having said first slot and said second slot for receiving a first brace member; and said cutting step (e) additionally producing an opposed third respective cut seared surface terminating in said opposed ends of said block of polymeric foamed material and opposed to said third respective cut seared surface to form a third slot in each of said polymeric foamed material structures; and said cutting step (f) additionally producing an opposed fourth respective cut seared surface terminating in said opposed ends of said block of polymeric foamed material and opposed to said fourth respective cut seared surface to form a fourth slot in each of said polymeric foamed material structures, each of said polymeric foamed material structures having said third slot and said fourth slot for receiving a second brace member.

6. The method of claim 1 additionally comprising cutting the block of polymeric foamed material with the plurality of hot wire cutters such that each of said polymeric foamed material structures has a tongue member and a channel member.

7. The method of claim 1 wherein said cutting step (f) is before said cutting step (e).

8. The method of claim 7 additionally comprising computer operating said hot wire cutters; and said block of polymeric foamed material is generally stationary; and said fifth direction is generally perpendicular from said fourth direction; and said sixth direction is generally perpendicular from said fifth direction.

9. The method of claim 7 additionally comprising forming a first flage-return slot, a second flange-return slot, a third flange-return slot, and a fourth flange-return slot in each of the polymeric foamed material structures.

10. The method of claim 9 additionally comprising providing a plurality of first brace members wherein each of said first brace members comprises a first web, a first flange secured to said first web, a first flange return secured to said first flange, a second flange secured to said web, and a second flange return secured to said second flange; and additionally comprising providing a plurality of second brace members wherein each of said second brace members comprises a second web, a third flange secured to said second web, a third flange return secured to said third flange, a fourth flange secured to said second web, a fourth flange return secured to said fourth flange; and disposing the plurality of the first brace members and the plurality of the second brace members in the plurality of polymeric foamed material structures such that each of said polymeric foamed material structures comprises the first web of the first brace member positioned against the first cut seared surface, the first flange positioned against the second cut secured surface, the first flange return positioned in the first flange-return slot, the second flange return positioned in the second flange-return slot, the second web of the second brace member positioned against the fourth cut seared surface, the third flange positioned against the third cut seared surface, the third flange return positioned in the third flange-return slot, and the fourth flange return positioned in the fourth flange-return slot.

11. A plurality of polymeric foamed material structures produced in accordance with the method of claim 10.

12. The method of claim 1 additionally comprising forming a first flange-return slot, a second flange-return slot, a third flange-return slot, and a fourth flange-return slot in each of the polymeric foamed material structures.

13. The method of claim 12 additionally comprising providing a plurality of first brace members wherein each of said first brace members comprises a first web, a first flange secured to said first web, a first flange return secured to said first flange, a second flange secured to said web, and a second flange return secured to said second flange; and additionally comprising providing a plurality of second brace members wherein each of said second brace members comprises a second web, a third flange secured to said second web, a third flange return secured to said third flange, a fourth flange secured to said second web, a fourth flange return secured to said fourth flange; and disposing the plurality of the first brace members and the plurality of the second brace members in the plurality of polymeric foamed material structures such that each of said polymeric foamed material structures comprises the first web of the first brace member positioned against the first cut seared surface, the first flange positioned against the second cut secured surface, the first flange return positioned in the first flange-return slot, the second flange return positioned in the second flange-return slot, the second web of the second brace member positioned against the fourth cut seared surface, the third flange positioned against the third cut seared surface, the third flange return positioned in the third flange-return slot, and the fourth flange return positioned in the fourth flange-return slot.

14. The method of claim 13 additionally comprising cutting the block of polymeric foamed material prior to said cutting step (g).

15. The method of claim 13 additionally comprising cutting the block of polymeric foamed material after said cutting step (g) and prior to disposing the plurality of the first brace members and the plurality of the second brace members in the plurality of polymeric foamed material structures.

16. A plurality of polymeric foamed material structures produced in accordance with the method of claim 13.

17. A plurality of polymeric foamed material structures produced in accordance with the method of claim 1.

18. A method for producing a polymeric foamed material panel comprising the steps of:

a) providing a polymeric foamed material structure comprising a pair of opposed ends, a side surface, a first hotwire-cut seared surface having been cut by a hotwire cutter in a first direction relative to said side surface and terminating in said pair of opposed ends, a second hotwire-cut seared surface having been cut by a hotwire cutter in a second direction from said first hotwire-cut seared surface and terminating in said pair of opposed ends, and a third hotwire-cut seared surface having been cut by a hotwire cutter in a third direction from said second hotwire-cut seared surface and terminating in said pair of opposed ends;

b) providing a brace member having a web and at least one flange secured to the web; and

c) disposing respectively the web and the flange of the brace member against the second hotwire-cut seared

surface and the third hotwire-cut seared surface to produce a polymeric foamed material panel.

19. The method of claim 18 wherein said first direction is generally perpendicular to said side surface.

20. The method of claim 18 wherein said brace member comprises a generally C-shape.

21. The method of claim 20 wherein a portion of the web of the brace member protrudes from the polymeric foamed material panel.

22. The method of claim 18 wherein said brace member comprises a generally Z-shape.

23. A polymeric foamed material panel produced in accordance with the method of claim 18.

24. A method for forming a structure comprising the steps of:

a) cutting a first polymeric foamed material with a first cutter in a first direction relative to a first side surface of the first polymeric foamed material;

b) cutting with the first cutter the first polymeric foamed material in a second direction relative to the first direction to produce a first-cutter first cut surface terminating in opposed ends of said first polymeric foamed material;

c) cutting with the first cutter the first polymeric foamed material in a third direction relative to the second direction to produce a first-cutter second cut surface terminating in said opposed ends of said first polymeric foamed material;

d) cutting the first polymeric foamed material with the first cutter to produce a first tongue in the first polymeric foamed material;

e) providing a first brace member having a first web and at least one first flange secured to the first web;

f) disposing respectively the first web and the first flange of the first brace member against the first-cutter first cut surface of step (b) and the first-cutter second cut surface of step (c) to produce a first polymeric foamed material panel having said first tongue;

g) cutting a second polymeric foamed material with a second cutter to produce a second channel in the second polymeric foamed material;

h) cutting the second polymeric foamed material with the second cutter in a first direction relative to a second side surface of the second polymeric foamed material;

i) cutting with the second cutter the second polymeric foamed material in a second direction relative to the first direction to produce a second-cutter first cut surface terminating in opposed ends of said second polymeric foamed material;

j) cutting with the second cutter the second polymeric foamed material in a third direction relative to the second direction to produce a second-cutter second cut surface terminating in said opposed ends of said second polymeric foamed material;

k) providing a second brace member having a second web and at least one second flange secured to the second web;

l) disposing respectively the second web and the second flange of the second brace member against the second-cutter first cut surface of step (i) and the second-cutter second cut surface of step (j) to produce a second polymeric foamed material panel having said second channel; and

m) sliding said first tongue of said first polymeric foamed material panel into said second channel of said second polymeric foamed material panel to form a structure.

25. The method of claim 24 additionally comprising cutting the first polymeric foamed material with the first cutter to produce a first channel in the polymeric foamed material and cutting the second polymeric foamed material with the second cutter to produce a second tongue in the second polymeric foamed material.

26. The method of claim 25 wherein said first direction of step (a) is generally perpendicular to the first side surface of step (a); said second direction of step (b) is generally perpendicular to said first direction of step (a); said third direction step (c) is generally perpendicular to said second direction of step (b); and wherein said first direction of step (h) is generally perpendicular to the second side surface of step (h); said second direction of step (i) is generally perpendicular to said first direction of step (h); said third direction of step (j) is generally perpendicular to said second direction of step (i).

27. The method of claim 24 wherein said first direction of step (a) is generally perpendicular to the first side surface of step (a); said second direction of step (b) is generally perpendicular to said first direction of step (a); said third direction step (c) is generally perpendicular to said second direction of step (b); and wherein said first direction of step (h) is generally perpendicular to the second side surface of step (h); said second direction of step (i) is generally perpendicular to said first direction of step (h); said third direction of step (j) is generally perpendicular to said second direction of step (i).

28. The method of claim 24 additionally comprising cutting respectively said first polymeric foamed material with said first cutter in said cutting steps (a) through (d) generally simultaneously with cutting respectively said second polymeric foamed material with said second cutter in said cutting steps (g) through (j).

29. The method of claim 24 wherein said cutting step (b) additionally producing an opposed first-cutter first cut surface terminating in said opposed ends of said first polymeric foamed material and opposed to said first-cutter first cut surface to form a first-cutter first slot in said first polymeric foamed material; and said cutting step (c) additionally producing an opposed first-cutter second cut surface terminating in said opposed ends of said first polymeric foamed material and opposed to said first-cutter second cut surface to form a first-cutter second slot in said first polymeric foamed material such that after said disposing step (f) said first web and said first flange of said first brace member are further disposed respectively in said first-cutter first slot and in said first-cutter second slot; and said cutting step (i) additionally producing an opposed second-cutter first cut surface terminating in said opposed ends of said second polymeric foamed material and opposed to said second-cutter first cut surface to form a second-cutter first slot in said second polymeric foamed material; and said cutting step (j) additionally producing an opposed second-cutter second cut surface terminating in said opposed ends of said second polymeric foamed material and opposed to said second-cutter second cut surface to form a second-cutter second slot in said second polymeric foamed material such that after said disposing step (l) said second web and said second flange of said second brace member are further disposed respectively in said second-cutter first slot and in second-cutter second slot.

30. The method of claim 24 wherein said second cutter and said first cutter are respectively a cutter selected from the group consisting of a hotwire cutter and a laser cutter.

31. The method of claim 24 wherein said first brace member comprises a generally C-shape, and a portion of the

first web of the first brace member protrudes from the first polymeric foamed material panel.

32. A structure produced in accordance with the method of claim 24.

33. A method for forming a structure comprising the steps of:

a) providing a first polymeric foamed material structure comprising a pair of opposed first ends, a first defined side surface, a first tongue, a first hotwire-cut seared surface having been cut by a hotwire cutter in a first direction relative to said first defined side surface and terminating in said pair of opposed first ends, a second hotwire-cut seared surface having been cut by a hotwire cutter in a second direction from said first hotwire-cut seared surface and terminating in said pair of opposed first ends, and a third hotwire-cut seared surface having been cut by a hotwire cutter in a third direction from said second hotwire-cut seared surface and terminating in said pair of opposed first ends;

b) providing a first brace member having a first web and at least one first flange secured to the web;

c) disposing respectively the first web and the first flange of the first brace member against the second hotwire-cut seared surface of step (a) and the third hotwire-cut seared surface of step (a) to produce a first polymeric foamed material panel having said first tongue;

d) providing a second polymeric foamed material structure comprising a pair of opposed second ends, a second defined side surface, a second channel, a first hotwire-cut seared surface having been cut by a hotwire cutter in a first direction relative to said second defined side surface and terminating in said pair of opposed second ends, a second hotwire-cut seared surface having been cut by a hotwire cutter in a second direction from said first hotwire-cut seared surface and terminating in said pair of opposed second ends, and a third hotwire-cut seared surface having been cut by a hotwire cutter in a third direction from said second hotwire-cut seared surface and terminating in said pair of opposed second ends;

e) providing a second brace member having a second web and at least one second flange secured to the web;

f) disposing respectively the second web and the second flange of the second brace member against the second hotwire-cut seared surface of step (d) and the third hotwire-cut seared surface of step (d) to produce a second polymeric foamed material panel having said second channel; and

g) disposing said first tongue of said first polymeric foamed material panel into said second channel of said second polymeric foamed material panel to form a structure.

34. A structure formed in accordance with the method of claim 33.

35. A method for producing a plurality of polymeric foamed material panels comprising the steps of:

a) cutting a polymeric foamed material with a plurality of cutters in a generally perpendicular direction from a defined surface of the polymeric foamed material;

b) cutting in at least a second direction the polymeric foamed material of step (a) with the plurality of cutters until each cutter forms in the polymeric foamed material a first respective slot terminating in opposed ends of the polymeric foamed material;

c) cutting with the plurality of cutters the polymeric foamed material of step (b) in said generally perpendicular direction of step (a) to produce a plurality of polymeric foamed material structures having first slots; and

d) disposing first brace members in the first slots of the polymeric foamed material structures of step (c) to produce a plurality of polymeric foamed material panels with each polymeric foamed material panel having one of said first brace members.

36. The method of claim 35 wherein said first brace members each comprise a generally C-shape, and said defined surface is a side of said polymeric foamed material.

37. The method of claim 36 wherein each of first brace members include a web a portion which protrudes from said polymeric foamed material panel.

38. A plurality of polymeric foamed material panels produced in accordance with the method of claim 35.

39. The method of claim 35 additionally comprising cutting the polymeric foamed material with the plurality of cutters until each cutter forms a second respective slot in the polymeric foamed material and said produced plurality of polymeric foamed material structures include second slots.

40. The method of claim 39 additionally comprising disposing second brace members in the second slots of the produced polymeric foamed material structures such that each polymeric foamed material panel includes one of said second brace members.

41. A method for producing a plurality of polymeric foamed material panels comprising the steps of:

a) providing a block of polymeric foamed material in a generally stationary position having a defined surface and a pair of opposed ends;

b) moving from said defined surface a plurality of cutters through the generally stationary block of polymeric foamed material of step (a) in a generally perpendicular direction of travel;

c) interrupting the movement of the plurality of cutters from said generally perpendicular direction of travel through the generally stationary blocks of polymeric foamed material to move the cutters in at least one direction of travel which differs from said generally perpendicular direction of travel such that each cutter produces a respective brace-receiving slot in the polymeric foamed material terminating in said opposed ends;

d) continuing said moving step (b) of said plurality of cutters in said generally perpendicular direction of travel, while intermittently interrupting the movement of the plurality of cutters from generally perpendicular direction of travel to move the cutters in at least one direction of travel which differs from said generally perpendicular direction of travel such that each cutter produces at least one additional respective brace-receiving slot in the polymeric foamed material, until said plurality of cutters have moved completely through the generally stationary block of polymeric foamed material after which a plurality of polymeric foamed material structures are produced with each polymeric foamed material structure having a plurality of brace-receiving slots; and

e) disposing brace members into the brace-receiving slots of the polymeric foamed material structures of step (d) to produce a plurality of polymeric foamed material panels with each polymeric foamed material panel having two of said brace members.

42. A plurality of polymeric foamed material panels produced in accordance with the method of claim 41.

43. The method of claim 41 wherein said defined surface comprises a side of said block of polymeric foamed material.

44. A method for producing a plurality of polymeric foamed material panels comprising the steps of:

a) cutting a polymeric foamed material in a first direction with a plurality of cutters generally moving in unison;

b) cutting subsequently the polymeric foamed material of step (a) in a second direction with said plurality of cutters generally moving in unison;

c) cutting, after said cutting step (b), the polymeric foamed material of step (b) in said first direction with said plurality of cutters generally moving in unison;

d) cutting, after said cutting step (c), the polymeric foamed material of step (c) in a third direction with said plurality of cutters generally moving in unison;

e) cutting, after said cutting step (d), the polymeric foamed material of step (d) in said first direction with said plurality of cutters generally moving in unison until said cutters have cut through the polymeric foamed material of step (d) to produce a plurality of polymeric foamed material structures having brace-receiving configurations; and

f) sliding brace members into the brace-receiving configurations of said polymeric foamed material structures of step (e) to produce a plurality of polymeric foamed material panels with each polymeric foamed material panel having one of said brace members.

45. A plurality of polymeric foamed material panels produced in accordance with the method of claim 44.

46. A method for producing a plurality of polymeric foamed material panels comprising the steps of:

a) providing a block of polymeric foamed material having a defined surface and a pair of opposed ends;

b) moving from said defined surface a plurality of cutters through the block of polymeric foamed material in a generally perpendicular direction of travel, while interrupting at least one time the moving of the plurality of cutters in said generally perpendicular direction of travel to move the cutters through the block of polymeric foamed material in at least one direction of travel which differs from said generally perpendicular direction of travel, such that each cutter produces a respective brace-receiving slot in the polymeric foamed material terminating in said opposed ends, until said plurality of cutters have moved completely through the block of polymeric foamed material to produce a plurality of polymeric foamed material structures with each structure having at least one brace-receiving slot; and

c) disposing a brace member into each brace-receiving slot of said polymeric foamed material structures to produce a plurality of polymeric foamed material panels with each of said polymeric foamed material panels having at least one brace member.

47. The method of claim 46 wherein said defined surface is a side surface of said block of polymeric foamed material.

48. A plurality of polymeric foamed material panels produced in accordance with the method of claim 46.

49. A method for producing a plurality of polymeric foamed material structures having slot sections for receiving stud members comprising the steps of:

a) cutting a polymeric foamed material with a plurality of cutters in a generally perpendicular direction from a side of the polymeric foamed material;

b) cutting subsequently in at least a second direction the polymeric foamed material of step (a) with the plurality of cutters until each cutter forms a first respective slot section in the polymeric foamed material, said first respective slot section terminating in opposed ends of the polymeric foamed material; and

c) cutting in said generally perpendicular direction of step (a) the polymeric foamed material with the plurality of cutters to produce a plurality of polymeric foamed material structures having a plurality of first slot sections, with each polymeric foamed material structure having one of the first slot sections.

50. The method of claim 49 wherein said plurality of cutters move generally simultaneously.

51. The method of claim 50 wherein said polymeric foamed material of step (a), step (b) and step (c) is generally stationary.

52. The method of claim 51 wherein said at least one second direction comprises a second direction generally perpendicular to said generally perpendicular direction of step (a).

53. The method of claim 52 additionally comprising cutting with the plurality of cutters, before said cutting step (c) and after said cutting step (b), the polymeric foamed material in said generally perpendicular direction of step (a) until each cutter forms a second respective slot section in the polymeric foamed material, said second respective slot section communicating with said first perspective slot section and terminating in opposed ends of the polymeric foamed material; and said cutting step (c) subsequently produces a plurality of polymeric foamed material structures having a plurality of first slot sections and a plurality of second slot sections, with each polymeric foamed material structure having one of the first slot sections and one of the second slot sections.

54. The method of claim 53 additionally comprising computer operating said plurality of cutters, and said plurality of cutters are selected from the group consisting of hot wire cutters and laser cutters.

55. The method of claim 52 additionally comprising cutting with the plurality of cutters, before said cutting step (c) and after said cutting step (b), the polymeric foamed material in said generally perpendicular direction of step (a) and subsequently in a fourth direction until each cutter forms a second respective slot section and a third respective slot section in the polymeric foamed material, said second respective slot section communicating with said first respective slot section and terminating in opposed ends of the polymeric foamed material and said third respective slot section communicating with said second respective slot section and terminating in opposed ends of the polymeric foamed material; and said cutting step (c) subsequently produces a plurality of polymeric foamed material structures having a plurality of first slot sections, a plurality of second slot sections, and a plurality of third slot sections, with each polymeric foamed material structure having one of the first slot sections, one of the second slot sections, and one of the third slot sections.

56. The method of claim 55 additionally comprising computer operating said plurality of cutters, and said plurality of cutters are selected from the group consisting of hot wire cutters and laser cutters.

57. The method of claim 55 additionally comprising providing a plurality of stud members, and disposing the plurality of stud members in said first slot sections and in said second slot sections and in said third slot sections of said polymeric foamed material structures to produce a plurality of polymeric foamed material panels, with each of the polymeric foamed material panels having one of the stud

members respectively occupying the first slot section, the second slot section and the third slot section associated with said each of the polymeric foamed material panels.

58. The method of claim 57 additionally comprising computer operating said plurality of cutters, and said plurality of cutters are selected from the group consisting of hot wire cutters and laser cutters.

59. The method of claim 49 wherein said polymeric foamed material of step (a), step (b) and step (c) is generally stationary.

60. The method of claim 49 wherein said at least one second direction comprises a second direction generally perpendicular to said generally perpendicular direction of step (a).

61. The method of claim 49 additionally comprising cutting with the plurality of cutters, before said cutting step (c) and after said cutting step (b), the polymeric foamed material in said generally perpendicular direction of step (a) until each cutter forms a second respective slot section in the polymeric foamed material, said second respective slot section communicating with said first perspective slot section and terminating in opposed ends of the polymeric foamed material; and said cutting step (c) subsequently produces a plurality of polymeric foamed material structures having a plurality of first slot sections and a plurality of second slot sections, with each polymeric foamed material structure having one of the first slot sections and one of the second slot sections.

62. The method of claim 61 additionally comprising providing a plurality of stud members, and disposing the plurality of stud members in said first slot sections and in said second slot sections of said polymeric foamed material structures to provide a plurality of polymeric foamed material panels, with each polymeric foamed material panel having one of the stud members.

63. A plurality of polymeric foamed material panels produced in accordance with the method of claim 62.

64. The method claim 49 additionally comprising cutting with the plurality of cutters, before said cutting step (c) and after said cutting step (b), the polymeric foamed material in said generally perpendicular direction of step (a) and subsequently in a fourth direction until each cutter forms a second respective slot section and a third respective slot section in the polymeric foamed material, said second respective slot section communicating with said first respective slot section and terminating in opposed ends of the polymeric foamed material and said third respective slot section communicating with said second respective slot section and terminating in opposed ends of the polymeric foamed material; and said cutting step (c) subsequently produces a plurality of polymeric foamed material structures having a plurality of first slot sections, a plurality of second slot sections, and a plurality of third slot sections, with each polymeric foamed material structure having one of the first slot sections, one of the second slot sections, and one of the third slot sections.

65. The method of claim 64 additionally comprising providing a plurality of stud members, and disposing the plurality of stud members in said first slot sections and in said second slot sections and in said third slot sections of said polymeric foamed material structures to produce a plurality of polymeric foamed material panels, with each of the polymeric foamed material panels having one of the stud members respectively occupying the first slot section, the second slot section and the third slot section associated with said each of the polymeric foamed material panels.

66. A plurality of polymeric foamed material panels produced in accordance with the method of claim 65.

67. The method of claim 49 wherein said plurality of cutters comprise hot wire cutters.

68. The method of claim 67 additionally comprising computer operating said plurality of hot wire cutters.

69. The method of claim 49 wherein said plurality of cutters comprise laser cutters.

70. The method of claim 69 additionally comprising computer operating said plurality of laser cutters.

71. The method of claim 49 additionally comprising providing a plurality of stud members, and disposing the plurality of stud members in said first slot sections of said polymeric foamed material structures to produce a plurality of polymeric foamed material panels, with each polymeric foamed material panel having one of the stud members.

72. The plurality of polymeric foamed material structures produced in accordance with the method of claim 71.

73. A plurality of polymeric foamed material structures produced in accordance with the method of claim 49.

74. A method for producing a plurality of polymeric foamed material structures having slots for receiving stud members comprising the steps of:

a) cutting a polymeric foamed material with a plurality of cutters in a generally perpendicular direction from a side surface of the polymeric foamed material;

b) cutting subsequently in at least a second direction the polymeric foamed material of step (a) with the plurality of cutters until each cutter forms a first respective slot in the polymeric foamed material, said first respective slot terminating in opposed ends of the polymeric foamed material;

c) cutting in said generally perpendicular direction of step (a) the polymeric foamed material with the plurality of cutters to produce a plurality of polymeric foamed material structures having a plurality of first slots, with each polymeric foamed material structure having one of the first slots.

75. The method of claim 74 additional comprising cutting, prior to said cutting step (c) and after said cutting step (b), the polymeric foamed material with the plurality of cutters until each cutter forms a second respective slot in the polymeric foamed material, said second respective slot terminating in opposed ends of the polymeric foamed material; and said cutting step (c) subsequently producing a plurality of polymeric foamed material structures having a plurality of first slots and a plurality of second slots, with each polymeric foamed material structure having one of the first slots and one of the second slots.

76. The method of claim 75 additionally comprising computer operating said plurality of cutters, and said plurality of cutters are selected from the group consisting of hot wire cutters and laser cutters.

77. The method of claim 76 wherein said polymeric foamed material is generally stationary and said plurality of cutters generally move simultaneously.

78. The method of claim 77 additionally comprising providing a plurality of stud members wherein each of said stud members comprises a web and a flange integrally bound to said web; and disposing the plurality of stud members in said first slots and in said second slots of said polymeric foamed material structures to produce a plurality of polymeric foamed material panels, with each of the polymeric foamed material panels having the web and the flange of one of the stud members respectively occupying the first slot and the second slot associated with said each of the polymeric foamed material panels.

79. A plurality of polymeric foamed material panels produced in accordance with the method of claim 78.

80. The method of claim 74 additionally comprising computer operating said plurality of cutters, and said plurality of cutters are selected from the group consisting of hot wire cutters and laser cutters.

81. A plurality of polymeric foamed material structures produced in accordance with the method of claim 74.

82. A method for producing a plurality of polymeric foamed material structures having brace-receiving slots comprising the steps of:

a) providing a generally stationary block of polymeric foamed material having a side surface and a pair of opposed ends;

b) moving generally simultaneously from said side surface a plurality of cutters through the block of polymeric foamed material in a generally perpendicular direction of travel, while interrupting at least one time the moving of the plurality of cutters in said generally perpendicular direction of travel to move the cutters through the block of polymeric foamed material in at least one direction of travel comprising a direction which differs from said generally perpendicular direction of travel, such that each cutter produces a respective brace-receiving slot in the polymeric foamed material terminating in said opposed end, until said plurality of cutters have moved completely through the, generally stationary block of polymeric foamed material to produce a plurality of polymeric foamed material structures having a plurality of brace-receiving slots, with each polymeric foamed material structure having at least one of the brace-receiving slots.

83. The method of claim 82 additionally comprising computer operating said plurality of cutters.

84. The method of claim 83 wherein said plurality of cutters are selected from the group consisting of hot wire cutters and laser cutters.

85. The method of claim 84 additionally comprising providing a plurality of brace members; and disposing the plurality of brace members in the plurality of brace-receiving slots of said polymeric foamed material structures to produce a plurality of polymeric foamed material panels, with each polymeric foamed material panel having at least one of the brace members.

86. The method of claim 84 wherein said at least one direction of travel comprises a first direction of travel, a second direction of travel immediately following said first direction of travel and being generally parallel to said generally perpendicular direction of travel, and a third direction of travel immediately following said second direction of travel.

87. The method of claim 86 wherein said first direction of travel is generally normal to said generally perpendicular direction of travel, and said second direction of travel is generally normal to said first direction of travel.

88. The method of claim 82 additionally comprising providing a plurality of brace members; and disposing the plurality of brace members in the plurality of brace-receiving slots of said polymeric foamed material structures to produce a plurality of polymeric foamed material panels, with each polymeric foamed material panel having at least one of the brace members.

89. A plurality of polymeric foamed material panels produced in accordance with the method of claim 88.

90. The method of claim 82 wherein said at least one direction of travel comprises a first direction of travel, a second direction of travel immediately following said first direction of travel and being generally parallel to said generally perpendicular direction of travel, and a third direction of travel immediately following said second direction of travel.

91. The method of claim 90 wherein said first direction of travel is generally normal to said generally perpendicular direction of travel, and said second direction of travel is generally normal to said first direction of travel.

92. A plurality of polymeric foamed material structures produced in accordance with the method of claim 90.

93. A plurality of polymeric foamed material structures produced in accordance with the method of claim 82.

* * * * *

UNITED STATES PATENT AND TRADEMARK OFFICE

Commissioner for Patents
United States Patent and Trademark Office
P.O. Box 1450
Alexandria, VA 22313-1450
www.uspto.gov

MAILED

MAY 18 2011

OFFICE OF PETITIONS

VEDDER PRICE P.C.
222 N. LASALLE STREET
CHICAGO, IL 60601

In re Application of :
Tom Robin Caine Boyde :
Application No. 09/433,680 : DECISION ON PETITION
Filed: November 4, 1999 : TO WITHDRAW
Attorney Docket No. **39171.00.0002** : FROM RECORD
:

This is a decision on the Request to Withdraw as attorney or agent of record under 37 CFR § 1.36(b), filed May 4, 2011.

The request is **NOT APPROVED** as moot.

A review of the file record indicates that the power of attorney to attorneys/agents associated with Customer Number 23418 has been revoked by the applicants of the patent application on March 22, 2011. Accordingly, the request to withdraw under 37 CFR § 1.36(b) is moot.

All future communications from the Office will continue to be directed to the below-listed address until otherwise notified by applicant.

Telephone inquires concerning this decision should be directed to the undersigned at 571-272-4584.

JoAnne Burke
Petitions Examiner
Office of Petitions

cc: Kelly & Krause, L.P.
1000 Jorie Boulevard
Suite 144
Oak Brook IL 60523

UNITED STATES PATENT AND TRADEMARK OFFICE

Commissioner for Patents
United States Patent and Trademark Office
P.O. Box 1450
Alexandria, VA 22313-1450
www.uspto.gov

Date Mailed : 10/20/11

Patent No. : 6579973 B1
Patent Issued : **June 17, 2003**
Docket No. : **210121.470C4**

Re: Request for Certificate of Correction

Consideration has been given your request for the issuance of a certificate of correction for the above-identified patent under the provisions of Rule(s) 1.322.

Respecting the alleged errors in the documents filed on 04/09/10; please see attachments. **"Therefore, no correction(s) is in order here under United States Codes (U.S.C.) 254 and the Code of Federal Regulation (C.F.R.) 1322."**

In view of the foregoing, your request in this matter is hereby denied.

Lamonte M. Newsome
For Mary Diggs, Supervisor
Decisions & Certificates
Of Correction Branch
(571) 272-3421 or (703) 305-8309

SEED INTELLECTUAL PROPERTY LAW GROUP PLLC
701 FIFTH AVE
SUITE 5400
SEATTLE WA 98104

LMN

SPE RESPONSE FOR CERTIFICATE OF CORRECTION

Paper No.: _____

DATE : 09/16/10

TO SPE OF : ART UNIT 1633

SUBJECT : Request for Certificate of Correction for Appl. No.: 09433826 Patent No.: 6579973

Please respond to this request for a certificate of correction within 7 days.

FOR IFW FILES:

Please review the requested changes/corrections as shown in the **COCIN** document(s) in the IFW application image. No new matter should be introduced, nor should the scope or meaning of the claims be changed.

Please complete the response (see below) and forward the completed response to scanning using document code **COCX**.

FOR PAPER FILES:

Please review the requested changes/corrections as shown in the attached certificate of correction. Please complete this form (see below) and forward it with the file to:

Certificates of Correction Branch (C of C)
Randolph Square 9D40-D
Palm Location 7580
You can fax the Directors/SPE response to 571-270-9990

Lamonte Nabors
Certificates of Correction Branch
703-756-1574

Thank You For Your Assistance

The request for issuing the above-identified correction(s) is hereby:
Note your decision on the appropriate box.

☐ **Approved**	**All** changes apply.
☐ **Approved in Part**	Specify below which changes **do not** apply.
☒ **Denied**	State the reasons for denial below.

Comments: Neither the action cited nor the history of the file indicates that the priority data was removed.
/Joseph Woitach/
Joseph Woitach, SPE 1633

_____ _____
SPE **Art Unit**

UNITED STATES PATENT AND TRADEMARK OFFICE

Commissioner for Patents
United States Patent and Trademark Office
P.O. Box 1450
Alexandria, VA 22313-1450
www.uspto.gov

BROWDY AND NEIMARK
624 NINTH STREET NW
WASHINGTON DC 20001

MAILED
JAN 31 2011
OFFICE OF PETITIONS

In re Application of : Paper No. 19
Israel Radomsky et al. :
Application No. 09/434,716 : NOTICE
Patent No. 6,574,482 :
Filed: November 05, 1999 :
Attorney Docket No. **24026**

This is a notice regarding your request for acceptance of a fee deficiency submission under 37 CFR 1.28.

The Office no longer investigates or rejects original or reissue patent under 37 CFR 1.56. **1098 Off. Gaz. Pat. Office 502 (January 3, 1989)**. Therefore, nothing in this Notice is intended to imply that an investigation was done.

Your fee deficiency submission under 37 CFR 1.28 is hereby **NOT ACCEPTED**.

The application file does not indicate a change of address has been filed in this case, although the address given on the petition differs from the address of record. A change of address should be filed in this case in accordance with MPEP 601.03. A courtesy copy of this decision is being mailed to the address noted on the petition. However, until otherwise instructed, all future correspondence regarding this application will be mailed solely to the address of record.

There is no indication that the person signing the petition was ever given a power of attorney to prosecute the application. If the person signing the petition desires to receive future correspondence regarding this application, the appropriate power of attorney document must be submitted. While a courtesy copy of this decision is being mailed to the person signing the petition, all future correspondence will be directed to the address currently of record until appropriate instructions are received.

It appears that the petition was not properly signed by a person having authority to prosecute in the above-identified patent. Therefore, the request can not be accepted at this time.

Petitioner's attention is directed to 37 CFR 1.33(b), which states.

(b) Amendments and other papers. Amendments and other papers, except for written assertions pursuant to § 1.27(c)(2)(ii) of this part, filed in the application must be signed by:

(1) A registered patent attorney or patent agent of record appointed in compliance with § 1.32(b);
(2) A registered patent attorney or patent agent not of record who acts in a representative capacity under the provisions of § 1.34;
(3) An assignee as provided for under §3.71(b) of this chapter; or

(4) All of the applicants (§ 1.41(b)) for patent, unless there is an assignee of the entire interest and such assignee has taken action in the application in accordance with § 3.71 of this chapter.

Accordingly, the request cannot be accepted until it is signed by all inventors, an attorney /agent who is registered to practice before the U.S. Patent and Trademark Office, or the assignee of the entire interest. If the request is signed by an assignee, the assignee the assignee must comply with the requirements of 37 CFR 3.73(b).

Inquiries related to this communication should be directed to the undersigned at (571) 272-2783.

/Tredelle D. Jackson/
Paralegal Specialist
Office of Petitions

cc: **VISONIC TECHNOLOGIES**
23 HABARZEL STREET
69710 TEL-AVIV
ISRAEL

UNITED STATES PATENT AND TRADEMARK OFFICE

Commissioner for Patents
United States Patent and Trademark Office
P.O. Box 1450
Alexandria, VA 22313-1450
www.uspto.gov

BROWDY AND NEIMARK
624 NINTH STREET NW
WASHINGTON DC 20001

MAILED

JUL 26 2011

OFFICE OF PETITIONS

In re Application of :
Israel Radomsky et al. :
Patent No. 6,574,482 : NOTICE
Application No. 09/434,716 :
Filed: November 05, 1999 :
Attorney Docket No. **24026**

This is a notice regarding your request for acceptance of a fee deficiency submission under 37 CFR 1.28 June 24, 2011.

The Office no longer investigates or rejects original or reissue patent under 37 CFR 1.56. **1098 Off. Gaz. Pat. Office 502 (January 3, 1989)**. Therefore, nothing in this Notice is intended to imply that an investigation was done.

Your fee deficiency submission under 37 CFR 1.28 is hereby **ACCEPTED**.

This patent is no longer entitled to small entity status. Accordingly, all future fees paid in this patent must be paid at the large entity rate.

Inquiries related to this communication should be directed to the undersigned at (571) 272-2783.

/Tredelle D. Jackson/
Paralegal Specialist
Office of Petitions

UNITED STATES PATENT AND TRADEMARK OFFICE

Commissioner for Patents
United States Patent and Trademark Office
P.O. Box 1450
Alexandria, VA 22313-1450
www.uspto.gov

BROWDY AND NEIMARK
624 NINTH STREET NW
WASHINGTON DC 20001

MAILED

JAN 31 2011

OFFICE OF PETITIONS

In re Application of : Paper No. 23
Israel Radomsky et al. :
Application No. 09/434,727 : NOTICE
Patent No. 6,600,899 :
Filed: November 05, 1999 :
Attorney Docket No. **24028**

This is a notice regarding your request for acceptance of a fee deficiency submission under 37 CFR 1.28.

The Office no longer investigates or rejects original or reissue patent under 37 CFR 1.56. **1098 Off. Gaz. Pat. Office 502 (January 3, 1989)**. Therefore, nothing in this Notice is intended to imply that an investigation was done.

Your fee deficiency submission under 37 CFR 1.28 is hereby **NOT ACCEPTED**.

The application file does not indicate a change of address has been filed in this case, although the address given on the petition differs from the address of record. A change of address should be filed in this case in accordance with MPEP 601.03. A courtesy copy of this decision is being mailed to the address noted on the petition. However, until otherwise instructed, all future correspondence regarding this application will be mailed solely to the address of record.

There is no indication that the person signing the petition was ever given a power of attorney to prosecute the application. If the person signing the petition desires to receive future correspondence regarding this application, the appropriate power of attorney document must be submitted. While a courtesy copy of this decision is being mailed to the person signing the petition, all future correspondence will be directed to the address currently of record until appropriate instructions are received.

It appears that the petition was not properly signed by a person having authority to prosecute in the above-identified patent. Therefore, the request can not be accepted at this time.

Petitioner's attention is directed to 37 CFR 1.33(b), which states.

(b) Amendments and other papers. Amendments and other papers, except for written assertions pursuant to § 1.27(c)(2)(ii) of this part, filed in the application must be signed by:

(1) A registered patent attorney or patent agent of record appointed in compliance with § 1.32(b);
(2) A registered patent attorney or patent agent not of record who acts in a representative capacity under the provisions of § 1.34;
(3) An assignee as provided for under §3.71(b) of this chapter; or

(4) All of the applicants (§ 1.41(b)) for patent, unless there is an assignee of the entire interest and such assignee has taken action in the application in accordance with § 3.71 of this chapter.

Accordingly, the request cannot be accepted until it is signed by all inventors, an attorney /agent who is registered to practice before the U.S. Patent and Trademark Office, or the assignee of the entire interest. If the request is signed by an assignee, the assignee the assignee must comply with the requirements of 37 CFR 3.73(b).

Inquiries related to this communication should be directed to the undersigned at (571) 272-2783.

/Tredelle D. Jackson/
Paralegal Specialist
Office of Petitions

cc: **VISONIC TECHNOLOGIES**
23 HABARZEL STREET
69710 TEL-AVIV
ISRAEL

UNITED STATES PATENT AND TRADEMARK OFFICE

Commissioner for Patents
United States Patent and Trademark Office
P.O. Box 1450
Alexandria, VA 22313-1450
www.uspto.gov

MAILED

JUL 26 2011

OFFICE OF PETITIONS

BROWDY AND NEIMARK
624 NINTH STREET NW
WASHINGTON DC 20001

In re Application of :
Israel Radomsky et al. :
Patent No. 6,600,899 : NOTICE
Application No. 09/434,727 :
Filed: November 05, 1999 :
Attorney Docket No. **24028**

This is a notice regarding your request for acceptance of a fee deficiency submission under 37 CFR 1.28 June 24, 2011.

The Office no longer investigates or rejects original or reissue patent under 37 CFR 1.56. **1098 Off. Gaz. Pat. Office 502 (January 3, 1989)**. Therefore, nothing in this Notice is intended to imply that an investigation was done.

Your fee deficiency submission under 37 CFR 1.28 is hereby **ACCEPTED**.

This patent is no longer entitled to small entity status. Accordingly, all future fees paid in this patent must be paid at the large entity rate.

Inquiries related to this communication should be directed to the undersigned at (571) 272-2783.

/Tredelle D. Jackson/
Paralegal Specialist
Office of Petitions

UNITED STATES DEPARTMENT OF COMMERCE
U.S. Patent and Trademark Office
Address: COMMISSIONER FOR PATENTS
P.O. Box 1450
Alexandria, Virginia 22313-1450

APPLICATION NO./ CONTROL NO.	FILING DATE	FIRST NAMED INVENTOR / PATENT IN REEXAMINATION	ATTORNEY DOCKET NO.
09/435,854	08 November, 1999	PRYOR, TIMOTHY R.	P00891US3

LARSON & TAYLOR
SUITE 900
1199 NORTH FAIRFAX STREET
ALEXANDRIA, VA 22314

EXAMINER	
ABBAS ABDULSELAM	
ART UNIT	PAPER
2629	20111117

DATE MAILED:

Please find below and/or attached an Office communication concerning this application or proceeding.

Commissioner for Patents

The certificate of correction has been approved

/ABBAS ABDULSELAM/
Primary Examiner, Art Unit 2629

SPE RESPONSE FOR CERTIFICATE OF CORRECTION

☒ **Approved** — All changes apply.

☐ **Approved in Part** — Specify below which changes **do not** apply.

☐ **Denied** — State the reasons for denial below.

Comments: _____

_____

_____

_____

_____

_____ 11/17/2011

SPE **Art Unit**

PTO/SB/66 (03-09)
Approved for use through 03/31/2012. OMB 0651-0016
U.S. Patent and Trademark Office: U.S. DEPARTMENT OF COMMERCE
Under the Paperwork Reduction Act of 1995, no persons are required to respond to a collection of information unless it displays valid OMB control number.

PETITION TO ACCEPT UNINTENTIONALLY DELAYED PAYMENT OF MAINTENANCE FEE IN AN EXPIRED PATENT (37 CFR 1.378(c))

Patent Number	Issue Date (YYYY-MM-DD)	Application Number	Filing Date (YYYY-MM-DD)	Docket Number (if applicable)
6330317	2001-12-11	09435955	1999-11-09	1039-002

CAUTION: Maintenance fee (and surcharge, if any) payment must correctly identify: (1) the patent number and (2) the application number of the actual U.S. application leading to issuance of that patent to ensure the fee(s) is/are associated with the correct patent. 37 CFR 1.366(c) and (d).

SMALL ENTITY

☒ Patentee claims, or has previously claimed, small entity status. See 37 CFR 1.27.

LOSS OF ENTITLEMENT TO SMALL ENTITY STATUS

☐ Patentee is no longer entitled to small entity status. See 37 CFR 1.27(g)

NOT Small Entity			Small Entity		
	Fee	Code		Fee	Code
○	3 ½ year	(1551)	○	3 ½ year	(2551)
○	7 ½ year	(1552)	◉	7 ½ year	(2552)
○	11 ½ year	(1553)	○	11 ½ year	(2553)

SURCHARGE

The surcharge required by 37 CFR 1.20(i)(2) (Fee Code 1558) must be paid as a condition of accepting unintentionally delayed payment of the maintenance fee.

MAINTENANCE FEE (37 CFR 1.20(e)-(g))

The appropriate maintenance fee must be submitted with this petition.

STATEMENT

THE UNDERSIGNED CERTIFIES THAT THE DELAY IN PAYMENT OF THE MAINTENANCE FEE TO THIS PATENT WAS UNINTENTIONAL

PETITIONER(S) REQUEST THAT THE DELAYED PAYMENT OF THE MAINTENANCE FEE BE ACCEPTED AND THE PATENT REINSTATED

THIS PORTION MUST BE COMPLETED BY THE SIGNATORY OR SIGNATORIES

37 CFR 1.378(d) states: "Any petition under this section must be signed by an attorney or agent registered to practice before the Patent and Trademark Office, or by the patentee, the assignee, or other party in interest."

I certify, in accordance with 37 CFR 1.4(d)(4) that I am

◉ An attorney or agent registered to practice before the Patent and Trademark Office

○ A sole patentee

○ A joint patentee; I certify that I am authorized to sign this submission on behalf of all the other patentees.

○ A joint patentee; all of whom are signing this e-petition

○ The assignee of record of the entire interest

PTO/SB/66 (03-09)
Approved for use through 03/31/2012. OMB 0651-0016
U.S. Patent and Trademark Office: U.S. DEPARTMENT OF COMMERCE
Under the Paperwork Reduction Act of 1995, no persons are required to respond to a collection of information unless it displays valid OMB control number.

Patent Practitioner			
A signature of the applicant or representative is required in accordance with 37 CFR 1.33 and 10.18. Please see 37 CFR 1.4(d) for the form of the signature			
Signature	/robert l. epstein/	Date (YYYY-MM-DD)	2010-09-16
Name	Robert L. Epstein	Registration Number	26451

This collection of information is required by 37 CFR 1.378(c). The information is required to obtain or retain a benefit by the public which is to file (and by the USPTO to process) an application. Confidentiality is governed by 35 U.S.C. 122 and 37 CFR 1.11 and 1.14. This collection is estimated to take 1 hour to complete, including gathering, preparing, and submitting the completed application form to the USPTO. Time will vary depending upon the individual case. Any comments on the amount of time you require to complete this form and/ or suggestions for reducing this burden, should be sent to the Chief Information Officer, U.S. Patent and Trademark Office, U.S. Department of Commerce, P.O. Box 1450, Alexandria, VA 22313-1450. DO NOT SEND FEES OR COMPLETED FORMS TO THIS ADDRESS. **This form can only be used when in conjunction with EFS-Web. If this form is mailed to the USPTO, it may cause delays in reinstating the patent.**

Privacy Act Statement

The Privacy Act of 1974 (P.L. 93-579) requires that you be given certain information in connection with your submission of the attached form related to a patent application or patent. Accordingly, pursuant to the requirements of the Act, please be advised that: (1) the general authority for the collection of this information is 35 U.S.C. 2(b)(2); (2) furnishing of the information solicited is voluntary; and (3) the principal purpose for which the information is used by the U.S. Patent and Trademark Office is to process and/or examine your submission related to a patent application or patent. If you do not furnish the requested information, the U.S. Patent and Trademark Office may not be able to process and/or examine your submission, which may result in termination of proceedings or abandonment of the application or expiration of the patent.

The information provided by you in this form will be subject to the following routine uses:

1. The information on this form will be treated confidentially to the extent allowed under the Freedom of Information Act (5 U.S.C. 552) and the Privacy Act (5 U.S.C. 552a). Records from this system of records may be disclosed to the Department of Justice to determine whether the Freedom of Information Act requires disclosure of these records.

2. A record from this system of records may be disclosed, as a routine use, in the course of presenting evidence to a court, magistrate, or administrative tribunal, including disclosures to opposing counsel in the course of settlement negotiations.

3. A record in this system of records may be disclosed, as a routine use, to a Member of Congress submitting a request involving an individual, to whom the record pertains, when the individual has requested assistance from the Member with respect to the subject matter of the record.

4. A record in this system of records may be disclosed, as a routine use, to a contractor of the Agency having need for the information in order to perform a contract. Recipients of information shall be required to comply with the requirements of the Privacy Act of 1974, as amended, pursuant to 5 U.S.C. 552a(m).

5. A record related to an International Application filed under the Patent Cooperation Treaty in this system of records may be disclosed, as a routine use, to the International Bureau of the World Intellectual Property Organization, pursuant to the Patent Cooperation Treaty.

6. A record in this system of records may be disclosed, as a routine use, to another federal agency for purposes of National Security review (35 U.S.C. 181) and for review pursuant to the Atomic Energy Act (42 U.S.C. 218(c)).

7. A record from this system of records may be disclosed, as a routine use, to the Administrator, General Services, or his/her designee, during an inspection of records conducted by GSA as part of that agency's responsibility to recommend improvements in records management practices and programs, under authority of 44 U.S.C. 2904 and 2906. Such disclosure shall be made in accordance with the GSA regulations governing inspection of records for this purpose, and any other relevant (i.e., GSA or Commerce) directive. Such disclosure shall not be used to make determinations about individuals.

8. A record from this system of records may be disclosed, as a routine use, to the public after either publication of the application pursuant to 35 U.S.C. 122(b) or issuance of a patent pursuant to 35 U.S.C. 151. Further, a record may be disclosed, subject to the limitations of 37 CFR 1.14, as a routine use, to the public if the record was filed in an application which became abandoned or in which the proceedings were terminated and which application is referenced by either a published application, an application open to public inspections or an issued patent.

9. A record from this system of records may be disclosed, as a routine use, to a Federal, State, or local law enforcement agency, if the USPTO becomes aware of a violation or potential violation of law or regulation.

UNITED STATES PATENT AND TRADEMARK OFFICE

Commissioner for Patents
United States Patent and Trademark Office
P.O. Box 1450
Alexandria, VA 22313-1450
www.uspto.gov

In re Patent No. 6330317
Issue Date: December 11,2001
Application No. 09435955
Filed: November 9,1999
Attorney Docket No. 1039-002

:
:DECISION GRANTING PETITION
:UNDER 37 CFR 1.378(c)
:

This is a decision on the electronic petition, filed September 16,2010 ,under 37 CFR 1.378(c) to accept the unintentionally delayed payment of the 7.5 year maintenance fee for the above-identified patent.

The petition is **GRANTED**.

The maintenance fee is accepted, and the above-identified patent reinstated as of September 16,2010 . This decision also constitutes notice that the fee has been accepted. An electronic copy of the petition and this decision has been created as an entry in the Image File Wrapper. Nevertheless, petitioner should print and retain an independent copy.

Telephone inquiries related to this electronic decision should be directed to the Electronic Business Center at 1-866-217-9197.

PTO/SB/66 (03-09)
Approved for use through 03/31/2012. OMB 0651-0016
U.S. Patent and Trademark Office: U.S. DEPARTMENT OF COMMERCE
Under the Paperwork Reduction Act of 1995, no persons are required to respond to a collection of information unless it displays valid OMB control number.

PETITION TO ACCEPT UNINTENTIONALLY DELAYED PAYMENT OF MAINTENANCE FEE IN AN EXPIRED PATENT (37 CFR 1.378(c))

Patent Number	Issue Date (YYYY-MM-DD)	Application Number	Filing Date (YYYY-MM-DD)	Docket Number (if applicable)
6654725	2003-11-25	09436241	1999-11-09	ID004912

CAUTION: Maintenance fee (and surcharge, if any) payment must correctly identify: (1) the patent number and (2) the application number of the actual U.S. application leading to issuance of that patent to ensure the fee(s) is/are associated with the correct patent. 37 CFR 1.366(c) and (d).

SMALL ENTITY

☐ Patentee claims, or has previously claimed, small entity status. See 37 CFR 1.27.

LOSS OF ENTITLEMENT TO SMALL ENTITY STATUS

☐ Patentee is no longer entitled to small entity status. See 37 CFR 1.27(g)

NOT Small Entity			Small Entity		
	Fee	Code		Fee	Code
○	3 ½ year	(1551)	○	3 ½ year	(2551)
◉	7 ½ year	(1552)	○	7 ½ year	(2552)
○	11 ½ year	(1553)	○	11 ½ year	(2553)

SURCHARGE

The surcharge required by 37 CFR 1.20(i)(2) (Fee Code 1558) must be paid as a condition of accepting unintentionally delayed payment of the maintenance fee.

MAINTENANCE FEE (37 CFR 1.20(e)-(g))

The appropriate maintenance fee must be submitted with this petition.

STATEMENT

THE UNDERSIGNED CERTIFIES THAT THE DELAY IN PAYMENT OF THE MAINTENANCE FEE TO THIS PATENT WAS UNINTENTIONAL

PETITIONER(S) REQUEST THAT THE DELAYED PAYMENT OF THE MAINTENANCE FEE BE ACCEPTED AND THE PATENT REINSTATED

THIS PORTION MUST BE COMPLETED BY THE SIGNATORY OR SIGNATORIES

37 CFR 1.378(d) states: "Any petition under this section must be signed by an attorney or agent registered to practice before the Patent and Trademark Office, or by the patentee, the assignee, or other party in interest."

I certify, in accordance with 37 CFR 1.4(d)(4) that I am

◉ An attorney or agent registered to practice before the Patent and Trademark Office

○ A sole patentee

○ A joint patentee; I certify that I am authorized to sign this submission on behalf of all the other patentees.

○ A joint patentee; all of whom are signing this e-petition

○ The assignee of record of the entire interest

PTO/SB/66 (03-09)
Approved for use through 03/31/2012. OMB 0651-0016
U.S. Patent and Trademark Office: U.S. DEPARTMENT OF COMMERCE
Under the Paperwork Reduction Act of 1995, no persons are required to respond to a collection of information unless it displays valid OMB control number.

Patent Practitioner			
A signature of the applicant or representative is required in accordance with 37 CFR 1.33 and 10.18. Please see 37 CFR 1.4(d) for the form of the signature			
Signature	/SMG/	Date (YYYY-MM-DD)	2012-04-09
Name	Steven M. Gruskin	Registration Number	36818

This collection of information is required by 37 CFR 1.378(c). The information is required to obtain or retain a benefit by the public which is to file (and by the USPTO to process) an application. Confidentiality is governed by 35 U.S.C. 122 and 37 CFR 1.11 and 1.14. This collection is estimated to take 1 hour to complete, including gathering, preparing, and submitting the completed application form to the USPTO. Time will vary depending upon the individual case. Any comments on the amount of time you require to complete this form and/ or suggestions for reducing this burden, should be sent to the Chief Information Officer, U.S. Patent and Trademark Office, U.S. Department of Commerce, P.O. Box 1450, Alexandria, VA 22313-1450. DO NOT SEND FEES OR COMPLETED FORMS TO THIS ADDRESS. **This form can only be used when in conjunction with EFS-Web. If this form is mailed to the USPTO, it may cause delays in reinstating the patent.**

Privacy Act Statement

The Privacy Act of 1974 (P.L. 93-579) requires that you be given certain information in connection with your submission of the attached form related to a patent application or patent. Accordingly, pursuant to the requirements of the Act, please be advised that: (1) the general authority for the collection of this information is 35 U.S.C. 2(b)(2); (2) furnishing of the information solicited is voluntary; and (3) the principal purpose for which the information is used by the U.S. Patent and Trademark Office is to process and/or examine your submission related to a patent application or patent. If you do not furnish the requested information, the U.S. Patent and Trademark Office may not be able to process and/or examine your submission, which may result in termination of proceedings or abandonment of the application or expiration of the patent.

The information provided by you in this form will be subject to the following routine uses:

1. The information on this form will be treated confidentially to the extent allowed under the Freedom of Information Act (5 U.S.C. 552) and the Privacy Act (5 U.S.C. 552a). Records from this system of records may be disclosed to the Department of Justice to determine whether the Freedom of Information Act requires disclosure of these records.

2. A record from this system of records may be disclosed, as a routine use, in the course of presenting evidence to a court, magistrate, or administrative tribunal, including disclosures to opposing counsel in the course of settlement negotiations.

3. A record in this system of records may be disclosed, as a routine use, to a Member of Congress submitting a request involving an individual, to whom the record pertains, when the individual has requested assistance from the Member with respect to the subject matter of the record.

4. A record in this system of records may be disclosed, as a routine use, to a contractor of the Agency having need for the information in order to perform a contract. Recipients of information shall be required to comply with the requirements of the Privacy Act of 1974, as amended, pursuant to 5 U.S.C. 552a(m).

5. A record related to an International Application filed under the Patent Cooperation Treaty in this system of records may be disclosed, as a routine use, to the International Bureau of the World Intellectual Property Organization, pursuant to the Patent Cooperation Treaty.

6. A record in this system of records may be disclosed, as a routine use, to another federal agency for purposes of National Security review (35 U.S.C. 181) and for review pursuant to the Atomic Energy Act (42 U.S.C. 218(c)).

7. A record from this system of records may be disclosed, as a routine use, to the Administrator, General Services, or his/her designee, during an inspection of records conducted by GSA as part of that agency's responsibility to recommend improvements in records management practices and programs, under authority of 44 U.S.C. 2904 and 2906. Such disclosure shall be made in accordance with the GSA regulations governing inspection of records for this purpose, and any other relevant (i.e., GSA or Commerce) directive. Such disclosure shall not be used to make determinations about individuals.

8. A record from this system of records may be disclosed, as a routine use, to the public after either publication of the application pursuant to 35 U.S.C. 122(b) or issuance of a patent pursuant to 35 U.S.C. 151. Further, a record may be disclosed, subject to the limitations of 37 CFR 1.14, as a routine use, to the public if the record was filed in an application which became abandoned or in which the proceedings were terminated and which application is referenced by either a published application, an application open to public inspections or an issued patent.

9. A record from this system of records may be disclosed, as a routine use, to a Federal, State, or local law enforcement agency, if the USPTO becomes aware of a violation or potential violation of law or regulation.

UNITED STATES PATENT AND TRADEMARK OFFICE

Commissioner for Patents
United States Patent and Trademark Office
P.O. Box 1450
Alexandria, VA 22313-1450
www.uspto.gov

In re Patent No. 6654725
Issue Date: November 25,2003
Application No. 09436241
Filed: November 9,1999
Attorney Docket No. 040373/0268

:
:DECISION GRANTING PETITION
:UNDER 37 CFR 1.378(c)
:

This is a decision on the electronic petition, filed April 9,2012 ,under 37 CFR 1.378(c) to accept the unintentionally delayed payment of the 7.5 year maintenance fee for the above-identified patent.

The petition is **GRANTED**.

The maintenance fee is accepted, and the above-identified patent reinstated as of April 9,2012 .
This decision also constitutes notice that the fee has been accepted. An electronic copy of the petition and this decision has been created as an entry in the Image File Wrapper. Nevertheless, petitioner should print and retain an independent copy.

Telephone inquiries related to this electronic decision should be directed to the Electronic Business Center at 1-866-217-9197.

UNITED STATES PATENT AND TRADEMARK OFFICE

Commissioner for Patents
United States Patent and Trademark Office
P.O. Box 1450
Alexandria, VA 22313-1450
www.uspto.gov

In re Patent No. 6990082
Issue Date: January 24,2006
Application No. 09436458
Filed: November 8,1999
Attorney Docket No. 04198.P003

:
:DECISION GRANTING PETITION
:UNDER 37 CFR 1.378(c)
:

This is a decision on the electronic petition, filed October 19,2010 ,under 37 CFR 1.378(c) to accept the unintentionally delayed payment of the 3.5 year maintenance fee for the above-identified patent.

The petition is **GRANTED**.

The maintenance fee is accepted, and the above-identified patent reinstated as of October 19,2010 . This decision also constitutes notice that the fee has been accepted. An electronic copy of the petition and this decision has been created as an entry in the Image File Wrapper. Nevertheless, petitioner should print and retain an independent copy.

Telephone inquiries related to this electronic decision should be directed to the Electronic Business Center at 1-866-217-9197.

PTO/SB/66 (03-09)
Approved for use through 03/31/2012. OMB 0651-0016
U.S. Patent and Trademark Office: U.S. DEPARTMENT OF COMMERCE
Under the Paperwork Reduction Act of 1995, no persons are required to respond to a collection of information unless it displays valid OMB control number.

PETITION TO ACCEPT UNINTENTIONALLY DELAYED PAYMENT OF MAINTENANCE FEE IN AN EXPIRED PATENT (37 CFR 1.378(c))

Patent Number	Issue Date (YYYY-MM-DD)	Application Number	Filing Date (YYYY-MM-DD)	Docket Number (if applicable)
6990082	2006-01-24	09436458	1999-11-08	04198.P003

CAUTION: Maintenance fee (and surcharge, if any) payment must correctly identify: (1) the patent number and (2) the application number of the actual U.S. application leading to issuance of that patent to ensure the fee(s) is/are associated with the correct patent. 37 CFR 1.366(c) and (d).

SMALL ENTITY

☐ Patentee claims, or has previously claimed, small entity status. See 37 CFR 1.27.

LOSS OF ENTITLEMENT TO SMALL ENTITY STATUS

☐ Patentee is no longer entitled to small entity status. See 37 CFR 1.27(g)

NOT Small Entity			Small Entity		
	Fee	Code		Fee	Code
◉	3 ½ year	(1551)	○	3 ½ year	(2551)
○	7 ½ year	(1552)	○	7 ½ year	(2552)
○	11 ½ year	(1553)	○	11 ½ year	(2553)

SURCHARGE

The surcharge required by 37 CFR 1.20(i)(2) (Fee Code 1558) must be paid as a condition of accepting unintentionally delayed payment of the maintenance fee.

MAINTENANCE FEE (37 CFR 1.20(e)-(g))

The appropriate maintenance fee must be submitted with this petition.

STATEMENT

THE UNDERSIGNED CERTIFIES THAT THE DELAY IN PAYMENT OF THE MAINTENANCE FEE TO THIS PATENT WAS UNINTENTIONAL

PETITIONER(S) REQUEST THAT THE DELAYED PAYMENT OF THE MAINTENANCE FEE BE ACCEPTED AND THE PATENT REINSTATED

THIS PORTION MUST BE COMPLETED BY THE SIGNATORY OR SIGNATORIES

37 CFR 1.378(d) states: "Any petition under this section must be signed by an attorney or agent registered to practice before the Patent and Trademark Office, or by the patentee, the assignee, or other party in interest."

I certify, in accordance with 37 CFR 1.4(d)(4) that I am

◉ An attorney or agent registered to practice before the Patent and Trademark Office

○ A sole patentee

○ A joint patentee; I certify that I am authorized to sign this submission on behalf of all the other patentees.

○ A joint patentee; all of whom are signing this e-petition

○ The assignee of record of the entire interest

PTO/SB/66 (03-09)
Approved for use through 03/31/2012. OMB 0651-0016
U.S. Patent and Trademark Office: U.S. DEPARTMENT OF COMMERCE
Under the Paperwork Reduction Act of 1995, no persons are required to respond to a collection of information unless it displays valid OMB control number.

Patent Practitioner			
A signature of the applicant or representative is required in accordance with 37 CFR 1.33 and 10.18. Please see 37 CFR 1.4(d) for the form of the signature			
Signature	/Kendal M. Sheets/	Date (YYYY-MM-DD)	2010-10-19
Name	Kendal M. Sheets	Registration Number	47077

This collection of information is required by 37 CFR 1.378(c). The information is required to obtain or retain a benefit by the public which is to file (and by the USPTO to process) an application. Confidentiality is governed by 35 U.S.C. 122 and 37 CFR 1.11 and 1.14. This collection is estimated to take 1 hour to complete, including gathering, preparing, and submitting the completed application form to the USPTO. Time will vary depending upon the individual case. Any comments on the amount of time you require to complete this form and/ or suggestions for reducing this burden, should be sent to the Chief Information Officer, U.S. Patent and Trademark Office, U.S. Department of Commerce, P.O. Box 1450, Alexandria, VA 22313-1450. DO NOT SEND FEES OR COMPLETED FORMS TO THIS ADDRESS. **This form can only be used when in conjunction with EFS-Web. If this form is mailed to the USPTO, it may cause delays in reinstating the patent.**

Privacy Act Statement

The Privacy Act of 1974 (P.L. 93-579) requires that you be given certain information in connection with your submission of the attached form related to a patent application or patent. Accordingly, pursuant to the requirements of the Act, please be advised that: (1) the general authority for the collection of this information is 35 U.S.C. 2(b)(2); (2) furnishing of the information solicited is voluntary; and (3) the principal purpose for which the information is used by the U.S. Patent and Trademark Office is to process and/or examine your submission related to a patent application or patent. If you do not furnish the requested information, the U.S. Patent and Trademark Office may not be able to process and/or examine your submission, which may result in termination of proceedings or abandonment of the application or expiration of the patent.

The information provided by you in this form will be subject to the following routine uses:

1. The information on this form will be treated confidentially to the extent allowed under the Freedom of Information Act (5 U.S.C. 552) and the Privacy Act (5 U.S.C. 552a). Records from this system of records may be disclosed to the Department of Justice to determine whether the Freedom of Information Act requires disclosure of these records.

2. A record from this system of records may be disclosed, as a routine use, in the course of presenting evidence to a court, magistrate, or administrative tribunal, including disclosures to opposing counsel in the course of settlement negotiations.

3. A record in this system of records may be disclosed, as a routine use, to a Member of Congress submitting a request involving an individual, to whom the record pertains, when the individual has requested assistance from the Member with respect to the subject matter of the record.

4. A record in this system of records may be disclosed, as a routine use, to a contractor of the Agency having need for the information in order to perform a contract. Recipients of information shall be required to comply with the requirements of the Privacy Act of 1974, as amended, pursuant to 5 U.S.C. 552a(m).

5. A record related to an International Application filed under the Patent Cooperation Treaty in this system of records may be disclosed, as a routine use, to the International Bureau of the World Intellectual Property Organization, pursuant to the Patent Cooperation Treaty.

6. A record in this system of records may be disclosed, as a routine use, to another federal agency for purposes of National Security review (35 U.S.C. 181) and for review pursuant to the Atomic Energy Act (42 U.S.C. 218(c)).

7. A record from this system of records may be disclosed, as a routine use, to the Administrator, General Services, or his/her designee, during an inspection of records conducted by GSA as part of that agency's responsibility to recommend improvements in records management practices and programs, under authority of 44 U.S.C. 2904 and 2906. Such disclosure shall be made in accordance with the GSA regulations governing inspection of records for this purpose, and any other relevant (i.e., GSA or Commerce) directive. Such disclosure shall not be used to make determinations about individuals.

8. A record from this system of records may be disclosed, as a routine use, to the public after either publication of the application pursuant to 35 U.S.C. 122(b) or issuance of a patent pursuant to 35 U.S.C. 151. Further, a record may be disclosed, subject to the limitations of 37 CFR 1.14, as a routine use, to the public if the record was filed in an application which became abandoned or in which the proceedings were terminated and which application is referenced by either a published application, an application open to public inspections or an issued patent.

9. A record from this system of records may be disclosed, as a routine use, to a Federal, State, or local law enforcement agency, if the USPTO becomes aware of a violation or potential violation of law or regulation.

UNITED STATES PATENT AND TRADEMARK OFFICE

Commissioner for Patents
United States Patent and Trademark Office
P.O. Box 1450
Alexandria, VA 22313-1450
www.uspto.gov

HAHN LOESER & PARKS, LLP
ONE GOJO PLAZA
SUITE 300
AKRON, OH 44311-1076

MAILED

JUN 07 2011

OFFICE OF PETITIONS

In re Patent No. 6,298,495 :
Issue Date: October 9, 2001 :
Application No. 09/438,916 : ON PETITION
Filed: November 12, 1999 :
Patentee(s) Masahiro Totani :

This is a decision on the petition under 37 CFR 1.378(c), filed May 4, 2011, to accept the delayed payment of a maintenance fee for the above-identified patent.

The petition is **GRANTED**.

The maintenance fee is hereby accepted and the above-identified patent is reinstated as of the mail date of this decision.

It is not apparent whether the person signing the statement of unintentional delay was in a position to have firsthand or direct knowledge of the facts and circumstances of the delay at issue. Nevertheless, such statement is being treated as having been made as the result of a reasonable inquiry into the facts and circumstances of such delay. In the event that such an inquiry has been made, petitioner must make such an inquiry. If such inquiry results in the discovery that the delay in paying the maintenance fee under 37 CFR 1.378(c) was intentional, petitioner must notify the Office.

The file does not indicate a change of address has been submitted, although the address given on the petition differs from the address of record. If appropriate, a change of address should be filed in accordance with MPEP 601.03. A courtesy copy of this decision is being mailed to the address given on the petition; however, the Office will mail all future correspondence solely to the address of record.

Telephone inquiries concerning this decision should be directed to Irvin Dingle at (571) 272-3210.

Irvin Dingle
Petitions Examiner
Office of Petitions

cc: Irving Keschner
21535 Hawthorne Boulevard, Suite 385
Torrance, CA 90503

Doc Code: PET.PTA.RCAL
Document Description: Request for Recalculation in view of Wyeth

PTO/SB/131 (02-10)
Approved for use through 07/31/2010. OMB 0651-0020
U.S. Patent and Trademark Office; U. S. DEPARTMENT OF COMMERCE
Under the Paperwork Reduction Act of 1995, no persons are required to respond to a collection of information unless it displays a valid OMB control number.

REQUEST FOR RECALCULATION OF PATENT TERM ADJUSTMENT IN VIEW OF *WYETH**

Attorney Docket Number: 72167.000124	
Application Number: 09/439,020	Filing Date (or 371(b) or (f) Date): 11/12/1999
Patent Number: 7,809,636	Issue Date: 10/05/2010
First Named Inventor: Brian Jou	
Title: System And Method For Multicurrency And Multibank Processing Over A Non-Secure Network	

PATENTEE HEREBY REQUESTS RECALCULATION OF THE PATENT TERM ADJUSTMENT (PTA) UNDER 35 USC 154(b) INDICATED ON THE ABOVE-IDENTIFIED PATENT. THE PATENTEE'S SOLE BASIS FOR REQUESTING THE RECALCULATION IS THE USPTO'S PRE-*WYETH* INTERPRETATION OF 35 U.S.C. 154(b)(2)(A).

Note: This form is only for requesting a recalculation of PTA for patents issued before March 2, 2010, if the sole basis for requesting the recalculation is the USPTO's pre-*Wyeth* interpretation of 35 U.S.C. 154(b)(2)(A). See Instruction Sheet on page 2 for more information.

Patentees are reminded that to preserve the right to review in the United States District Court for the District of Columbia of the USPTO's patent term adjustment determination, a patentee must ensure that he or she also takes the steps required under 35 U.S.C. 154(b)(3) and (b)(4) and 37 CFR 1.705 in a timely manner.

**Wyeth v. Kappos*, No. 2009-1120 (Fed. Cir., Jan. 7, 2010).

Signature	Date 12/06/2010
Name (Print/Typed) Robert A. King	Registration Number 42,738

Note: *Signatures of all the inventors or assignees of record of the entire interest or their representative(s) are required in accordance with 37 CFR 1.33 and 11.18. Please see 37 CFR 1.4(d) for the form of the signature. If necessary, submit multiple forms for more than one signature, see below**.*

☐ *Total of _____ forms are submitted.

The information is required to obtain or retain a benefit by the public which is to file (and by the USPTO to process) an application. Confidentiality is governed by 35 U.S.C. 122 and 37 CFR 1.11 and 1.14. This collection is estimated to take 12 hours to complete, including gathering, preparing, and submitting the completed application form to the USPTO. Time will vary depending upon the individual case. Any comments on the amount of time you require to complete this form and/or suggestions for reducing this burden, should be sent to the Chief Information Officer, U.S. Patent and Trademark Office, U.S. Department of Commerce, P.O. Box 1450, Alexandria, VA 22313-1450. DO NOT SEND FEES OR COMPLETED FORMS TO THIS ADDRESS. **SEND TO: Commissioner for Patents, P.O. Box 1450, Alexandria, VA 22313-1450.**

If you need assistance in completing the form, call 1-800-PTO-9199 and select option 2.

UNITED STATES PATENT AND TRADEMARK OFFICE

UNITED STATES DEPARTMENT OF COMMERCE
United States Patent and Trademark Office
Address: COMMISSIONER FOR PATENTS
P.O. Box 1450
Alexandria, Virginia 22313-1450
www.uspto.gov

HUNTON & WILLIAMS LLP
INTELLECTUAL PROPERTY DEPARTMENT
1900 K STREET, N.W.
SUITE 1200
WASHINGTON, DC 20006-1109

Mail Date: 12/13/2010

Applicant	: BRIAN JOU	: DECISION ON REQUEST FOR
Patent Number	: 7809636	: RECALCULATION of PATENT
Issue Date	: 10/05/2010	: TERM ADJUSTMENT IN VIEW
Application No	: 09/439,020	: OF WYETH
Filed	: 11/12/1999	:
		:

The Patentee's Request for Recalculation is **DISMISSED.**

This Request is deemed ineligible for consideration for one or more of the following reasons:

(A). The patent for which PTA recalculation is requested is either a design or reissue application or is a reexamination proceeding;

(B). The patent for which PTA recalculation is requested resulted from a utility or plant application filed under 35 USC 111(a) before May 29, 2000 and no CPA filed in the application on/after May 29, 2000;

(C). The patent for which PTA recalculation is requested resulted from an international application in which the international filing date was before May 29, 2000 and no CPA filed in the application on/after May 29, 2000;

(D). The patent for which PTA recalculation is requested issued on/after March 2, 2010;

(E). The Request for Recalculation was filed more than 180 days after the grant date of the patent and the request was not filed within two months of a dismissal of a request for reconsideration of the of the patent term under 37 CFR 1.705(d);

(F). The Request for Recalculation is not solely limited to USPTO pre-Wyeth interpretation of 35 U.S.C. 154(b)(2)(A);

or

(G). A civil action was filed pursuant to 35 U.S.C. 154(b)(4)(A)concerning the same patent at issue in this request.

Patentee may file a reply to this decision dismissing the Request for Recalculation. Patentee must file such reply within one month or thirty days, whichever is longer, of the mail date of the decision dismissing the Request for Recalculation. No fee is required if patentee is asserting in the reply that the dismissal for ineligibility is improper.

Patentee should use document code PET.OP if electronically filing a reply to this dismissal. If the USPTO finds that the request was improperly deemed ineligible, the USPTO will mail applicant a recalculation determination.

Patentee should be aware that in order to preserve the right to review in the United States District Court for the District of Columbia of the USPTO patent term adjustment determination, patentee must ensure that he or she also take the steps required under 35 U.S.C. 154(b)(4)(A). Nothing in the request for recalculation should be construed as providing an alternative time frame for commencing a civil action under 35 U.S.C. 154(b)(4)(A).

Any questions concerning this decision should be directed to the Office of Patent Legal Administration at 571-272-7702.

UNITED STATES PATENT AND TRADEMARK OFFICE

Commissioner for Patents
United States Patent and Trademark Office
P.O. Box 1450
Alexandria, VA 22313-1450
www.uspto.gov

PATENTBEST
4600 ADELINE ST., #101
EMERYVILLE, CA 94608

MAILED

MAR 22 2011

OFFICE OF PETITIONS

In re Patent of Bennett et al. :
Patent No. 7,050,977 :
Issue Date: May 23, 2006 : Letter
Application No. 09/439,174 :
Filing Date: November 12, 1999 :
Attorney Docket No. PHO99003 :

This is a notice regarding your request for acceptance of a fee deficiency submission under 37 CFR 1.28(c) filed November 26, 2010.

The deficiency payment of $490 is hereby accepted.

The change of status to large entity has been entered and made of record.

Telephone inquiries regarding this communication should be directed to Petitions Attorney Steven Brantley at (571) 272-3203.

Charles Steven Brantley
Senior Petitions Attorney
Office of Petitions

PTO/SB/66 (03-09)
Approved for use through 03/31/2012. OMB 0651-0016
U.S. Patent and Trademark Office: U.S. DEPARTMENT OF COMMERCE
Under the Paperwork Reduction Act of 1995, no persons are required to respond to a collection of information unless it displays valid OMB control number.

PETITION TO ACCEPT UNINTENTIONALLY DELAYED PAYMENT OF MAINTENANCE FEE IN AN EXPIRED PATENT (37 CFR 1.378(c))

Patent Number	Issue Date (YYYY-MM-DD)	Application Number	Filing Date (YYYY-MM-DD)	Docket Number (if applicable)
6,322,524	2001-11-27	09/439,795	1999-11-12	P/5517-28 (V21374)

CAUTION: Maintenance fee (and surcharge, if any) payment must correctly identify: (1) the patent number and (2) the application number of the actual U.S. application leading to issuance of that patent to ensure the fee(s) is/are associated with the correct patent. 37 CFR 1.366(c) and (d).

SMALL ENTITY

☒ Patentee claims, or has previously claimed, small entity status. See 37 CFR 1.27.

LOSS OF ENTITLEMENT TO SMALL ENTITY STATUS

☐ Patentee is no longer entitled to small entity status. See 37 CFR 1.27(g)

NOT Small Entity			Small Entity		
	Fee	Code		Fee	Code
○	3 ½ year	(1551)	○	3 ½ year	(2551)
○	7 ½ year	(1552)	◉	7 ½ year	(2552)
○	11 ½ year	(1553)	○	11 ½ year	(2553)

SURCHARGE

The surcharge required by 37 CFR 1.20(i)(2) (Fee Code 1558) must be paid as a condition of accepting unintentionally delayed payment of the maintenance fee.

MAINTENANCE FEE (37 CFR 1.20(e)-(g))

The appropriate maintenance fee must be submitted with this petition.

STATEMENT

THE UNDERSIGNED CERTIFIES THAT THE DELAY IN PAYMENT OF THE MAINTENANCE FEE TO THIS PATENT WAS UNINTENTIONAL

PETITIONER(S) REQUEST THAT THE DELAYED PAYMENT OF THE MAINTENANCE FEE BE ACCEPTED AND THE PATENT REINSTATED

THIS PORTION MUST BE COMPLETED BY THE SIGNATORY OR SIGNATORIES

37 CFR 1.378(d) states: "Any petition under this section must be signed by an attorney or agent registered to practice before the Patent and Trademark Office, or by the patentee, the assignee, or other party in interest."

I certify, in accordance with 37 CFR 1.4(d)(4) that I am

◉ An attorney or agent registered to practice before the Patent and Trademark Office

○ A sole patentee

○ A joint patentee; I certify that I am authorized to sign this submission on behalf of all the other patentees.

○ A joint patentee; all of whom are signing this e-petition

○ The assignee of record of the entire interest

PTO/SB/66 (03-09)
Approved for use through 03/31/2012. OMB 0651-0016
U.S. Patent and Trademark Office: U.S. DEPARTMENT OF COMMERCE
Under the Paperwork Reduction Act of 1995, no persons are required to respond to a collection of information unless it displays valid OMB control number.

Patent Practitioner			
A signature of the applicant or representative is required in accordance with 37 CFR 1.33 and 10.18. Please see 37 CFR 1.4(d) for the form of the signature			
Signature	/Joel J Felber/	Date (YYYY-MM-DD)	2011-11-23
Name	Joel J. Felber	Registration Number	59642

This collection of information is required by 37 CFR 1.378(c). The information is required to obtain or retain a benefit by the public which is to file (and by the USPTO to process) an application. Confidentiality is governed by 35 U.S.C. 122 and 37 CFR 1.11 and 1.14. This collection is estimated to take 1 hour to complete, including gathering, preparing, and submitting the completed application form to the USPTO. Time will vary depending upon the individual case. Any comments on the amount of time you require to complete this form and/ or suggestions for reducing this burden, should be sent to the Chief Information Officer, U.S. Patent and Trademark Office, U.S. Department of Commerce, P.O. Box 1450, Alexandria, VA 22313-1450. DO NOT SEND FEES OR COMPLETED FORMS TO THIS ADDRESS. **This form can only be used when in conjunction with EFS-Web. If this form is mailed to the USPTO, it may cause delays in reinstating the patent.**

Privacy Act Statement

The Privacy Act of 1974 (P.L. 93-579) requires that you be given certain information in connection with your submission of the attached form related to a patent application or patent. Accordingly, pursuant to the requirements of the Act, please be advised that: (1) the general authority for the collection of this information is 35 U.S.C. 2(b)(2); (2) furnishing of the information solicited is voluntary; and (3) the principal purpose for which the information is used by the U.S. Patent and Trademark Office is to process and/or examine your submission related to a patent application or patent. If you do not furnish the requested information, the U.S. Patent and Trademark Office may not be able to process and/or examine your submission, which may result in termination of proceedings or abandonment of the application or expiration of the patent.

The information provided by you in this form will be subject to the following routine uses:

1. The information on this form will be treated confidentially to the extent allowed under the Freedom of Information Act (5 U.S.C. 552) and the Privacy Act (5 U.S.C. 552a). Records from this system of records may be disclosed to the Department of Justice to determine whether the Freedom of Information Act requires disclosure of these records.

2. A record from this system of records may be disclosed, as a routine use, in the course of presenting evidence to a court, magistrate, or administrative tribunal, including disclosures to opposing counsel in the course of settlement negotiations.

3. A record in this system of records may be disclosed, as a routine use, to a Member of Congress submitting a request involving an individual, to whom the record pertains, when the individual has requested assistance from the Member with respect to the subject matter of the record.

4. A record in this system of records may be disclosed, as a routine use, to a contractor of the Agency having need for the information in order to perform a contract. Recipients of information shall be required to comply with the requirements of the Privacy Act of 1974, as amended, pursuant to 5 U.S.C. 552a(m).

5. A record related to an International Application filed under the Patent Cooperation Treaty in this system of records may be disclosed, as a routine use, to the International Bureau of the World Intellectual Property Organization, pursuant to the Patent Cooperation Treaty.

6. A record in this system of records may be disclosed, as a routine use, to another federal agency for purposes of National Security review (35 U.S.C. 181) and for review pursuant to the Atomic Energy Act (42 U.S.C. 218(c)).

7. A record from this system of records may be disclosed, as a routine use, to the Administrator, General Services, or his/her designee, during an inspection of records conducted by GSA as part of that agency's responsibility to recommend improvements in records management practices and programs, under authority of 44 U.S.C. 2904 and 2906. Such disclosure shall be made in accordance with the GSA regulations governing inspection of records for this purpose, and any other relevant (i.e., GSA or Commerce) directive. Such disclosure shall not be used to make determinations about individuals.

8. A record from this system of records may be disclosed, as a routine use, to the public after either publication of the application pursuant to 35 U.S.C. 122(b) or issuance of a patent pursuant to 35 U.S.C. 151. Further, a record may be disclosed, subject to the limitations of 37 CFR 1.14, as a routine use, to the public if the record was filed in an application which became abandoned or in which the proceedings were terminated and which application is referenced by either a published application, an application open to public inspections or an issued patent.

9. A record from this system of records may be disclosed, as a routine use, to a Federal, State, or local law enforcement agency, if the USPTO becomes aware of a violation or potential violation of law or regulation.

UNITED STATES PATENT AND TRADEMARK OFFICE

Commissioner for Patents
United States Patent and Trademark Office
P.O. Box 1450
Alexandria, VA 22313-1450
www.uspto.gov

In re Patent No. 6322524
Issue Date: November 27,2001
Application No. 09439795
Filed: November 12,1999
Attorney Docket No. V1025/20016

:
:DECISION GRANTING PETITION
:UNDER 37 CFR 1.378(c)
:

This is a decision on the electronic petition, filed November 23,2011 ,under 37 CFR 1.378(c) to accept the unintentionally delayed payment of the 7.5 year maintenance fee for the above-identified patent.

The petition is **GRANTED**.

The maintenance fee is accepted, and the above-identified patent reinstated as of November 23,2011 . This decision also constitutes notice that the fee has been accepted. An electronic copy of the petition and this decision has been created as an entry in the Image File Wrapper. Nevertheless, petitioner should print and retain an independent copy.

Telephone inquiries related to this electronic decision should be directed to the Electronic Business Center at 1-866-217-9197.

UNITED STATES PATENT AND TRADEMARK OFFICE

Commissioner for Patents
United States Patent and Trademark Office
P.O. Box 1450
Alexandria, VA 22313-1450
www.uspto.gov

In re Patent No. 6463467
Issue Date: October 8,2002
Application No. 09439859
Filed: November 12,1999
Attorney Docket No. 1093-027U

:
:DECISION GRANTING PETITION
:UNDER 37 CFR 1.378(c)
:

This is a decision on the electronic petition, filed February 9,2011 ,under 37 CFR 1.378(c) to accept the unintentionally delayed payment of the 7.5 year maintenance fee for the above-identified patent.

The petition is **GRANTED**.

The maintenance fee is accepted, and the above-identified patent reinstated as of February 9,2011 . This decision also constitutes notice that the fee has been accepted. An electronic copy of the petition and this decision has been created as an entry in the Image File Wrapper. Nevertheless, petitioner should print and retain an independent copy.

Telephone inquiries related to this electronic decision should be directed to the Electronic Business Center at 1-866-217-9197.

PTO/SB/66 (03-09)
Approved for use through 03/31/2012. OMB 0651-0016
U.S. Patent and Trademark Office: U.S. DEPARTMENT OF COMMERCE
Under the Paperwork Reduction Act of 1995, no persons are required to respond to a collection of information unless it displays valid OMB control number.

PETITION TO ACCEPT UNINTENTIONALLY DELAYED PAYMENT OF MAINTENANCE FEE IN AN EXPIRED PATENT (37 CFR 1.378(c))

Patent Number	Issue Date (YYYY-MM-DD)	Application Number	Filing Date (YYYY-MM-DD)	Docket Number (if applicable)
6463467	2002-10-08	09439859	1999-11-12	1093-027U

CAUTION: Maintenance fee (and surcharge, if any) payment must correctly identify: (1) the patent number and (2) the application number of the actual U.S. application leading to issuance of that patent to ensure the fee(s) is/are associated with the correct patent. 37 CFR 1.366(c) and (d).

SMALL ENTITY

☐ Patentee claims, or has previously claimed, small entity status. See 37 CFR 1.27.

LOSS OF ENTITLEMENT TO SMALL ENTITY STATUS

☐ Patentee is no longer entitled to small entity status. See 37 CFR 1.27(g)

NOT Small Entity			Small Entity		
	Fee	Code		Fee	Code
○	3 ½ year	(1551)	○	3 ½ year	(2551)
◉	7 ½ year	(1552)	○	7 ½ year	(2552)
○	11 ½ year	(1553)	○	11 ½ year	(2553)

SURCHARGE

The surcharge required by 37 CFR 1.20(i)(2) (Fee Code 1558) must be paid as a condition of accepting unintentionally delayed payment of the maintenance fee.

MAINTENANCE FEE (37 CFR 1.20(e)-(g))

The appropriate maintenance fee must be submitted with this petition.

STATEMENT

THE UNDERSIGNED CERTIFIES THAT THE DELAY IN PAYMENT OF THE MAINTENANCE FEE TO THIS PATENT WAS UNINTENTIONAL

PETITIONER(S) REQUEST THAT THE DELAYED PAYMENT OF THE MAINTENANCE FEE BE ACCEPTED AND THE PATENT REINSTATED

THIS PORTION MUST BE COMPLETED BY THE SIGNATORY OR SIGNATORIES

37 CFR 1.378(d) states: "Any petition under this section must be signed by an attorney or agent registered to practice before the Patent and Trademark Office, or by the patentee, the assignee, or other party in interest."

I certify, in accordance with 37 CFR 1.4(d)(4) that I am

◉ An attorney or agent registered to practice before the Patent and Trademark Office

○ A sole patentee

○ A joint patentee; I certify that I am authorized to sign this submission on behalf of all the other patentees.

○ A joint patentee; all of whom are signing this e-petition

○ The assignee of record of the entire interest

PTO/SB/66 (03-09)
Approved for use through 03/31/2012. OMB 0651-0016
U.S. Patent and Trademark Office: U.S. DEPARTMENT OF COMMERCE
Under the Paperwork Reduction Act of 1995, no persons are required to respond to a collection of information unless it displays valid OMB control number.

Patent Practitioner			
A signature of the applicant or representative is required in accordance with 37 CFR 1.33 and 10.18. Please see 37 CFR 1.4(d) for the form of the signature			
Signature	/Kendal M. Sheets/	Date (YYYY-MM-DD)	2011-02-09
Name	Kendal M. Sheets	Registration Number	47077

This collection of information is required by 37 CFR 1.378(c). The information is required to obtain or retain a benefit by the public which is to file (and by the USPTO to process) an application. Confidentiality is governed by 35 U.S.C. 122 and 37 CFR 1.11 and 1.14. This collection is estimated to take 1 hour to complete, including gathering, preparing, and submitting the completed application form to the USPTO. Time will vary depending upon the individual case. Any comments on the amount of time you require to complete this form and/ or suggestions for reducing this burden, should be sent to the Chief Information Officer, U.S. Patent and Trademark Office, U.S. Department of Commerce, P.O. Box 1450, Alexandria, VA 22313-1450. DO NOT SEND FEES OR COMPLETED FORMS TO THIS ADDRESS. **This form can only be used when in conjunction with EFS-Web. If this form is mailed to the USPTO, it may cause delays in reinstating the patent.**

Privacy Act Statement

The Privacy Act of 1974 (P.L. 93-579) requires that you be given certain information in connection with your submission of the attached form related to a patent application or patent. Accordingly, pursuant to the requirements of the Act, please be advised that: (1) the general authority for the collection of this information is 35 U.S.C. 2(b)(2); (2) furnishing of the information solicited is voluntary; and (3) the principal purpose for which the information is used by the U.S. Patent and Trademark Office is to process and/or examine your submission related to a patent application or patent. If you do not furnish the requested information, the U.S. Patent and Trademark Office may not be able to process and/or examine your submission, which may result in termination of proceedings or abandonment of the application or expiration of the patent.

The information provided by you in this form will be subject to the following routine uses:

1. The information on this form will be treated confidentially to the extent allowed under the Freedom of Information Act (5 U.S.C. 552) and the Privacy Act (5 U.S.C. 552a). Records from this system of records may be disclosed to the Department of Justice to determine whether the Freedom of Information Act requires disclosure of these records.

2. A record from this system of records may be disclosed, as a routine use, in the course of presenting evidence to a court, magistrate, or administrative tribunal, including disclosures to opposing counsel in the course of settlement negotiations.

3. A record in this system of records may be disclosed, as a routine use, to a Member of Congress submitting a request involving an individual, to whom the record pertains, when the individual has requested assistance from the Member with respect to the subject matter of the record.

4. A record in this system of records may be disclosed, as a routine use, to a contractor of the Agency having need for the information in order to perform a contract. Recipients of information shall be required to comply with the requirements of the Privacy Act of 1974, as amended, pursuant to 5 U.S.C. 552a(m).

5. A record related to an International Application filed under the Patent Cooperation Treaty in this system of records may be disclosed, as a routine use, to the International Bureau of the World Intellectual Property Organization, pursuant to the Patent Cooperation Treaty.

6. A record in this system of records may be disclosed, as a routine use, to another federal agency for purposes of National Security review (35 U.S.C. 181) and for review pursuant to the Atomic Energy Act (42 U.S.C. 218(c)).

7. A record from this system of records may be disclosed, as a routine use, to the Administrator, General Services, or his/her designee, during an inspection of records conducted by GSA as part of that agency's responsibility to recommend improvements in records management practices and programs, under authority of 44 U.S.C. 2904 and 2906. Such disclosure shall be made in accordance with the GSA regulations governing inspection of records for this purpose, and any other relevant (i.e., GSA or Commerce) directive. Such disclosure shall not be used to make determinations about individuals.

8. A record from this system of records may be disclosed, as a routine use, to the public after either publication of the application pursuant to 35 U.S.C. 122(b) or issuance of a patent pursuant to 35 U.S.C. 151. Further, a record may be disclosed, subject to the limitations of 37 CFR 1.14, as a routine use, to the public if the record was filed in an application which became abandoned or in which the proceedings were terminated and which application is referenced by either a published application, an application open to public inspections or an issued patent.

9. A record from this system of records may be disclosed, as a routine use, to a Federal, State, or local law enforcement agency, if the USPTO becomes aware of a violation or potential violation of law or regulation.

UNITED STATES PATENT AND TRADEMARK OFFICE

Commissioner for Patents
United States Patent and Trademark Office
P.O. Box 1450
Alexandria, VA 22313-1450
www.uspto.gov

MAILED

JUN 03 2011

OFFICE OF PETITIONS

OSTROLENK FABER GERB & SOFFEN
1180 AVENUE OF THE AMERICAS
NEW YORK, NY 10036-8403

In re Patent No. 6,193,667 :
Issue Date: February 27, 2001 :
Application No. 09/440,429 : ON PETITION
Filed: November 15, 1999 :
Attorney Docket No. V1025/20022 :

This is a decision in response to a petition filed March 3, 2011 (Certificate of Mailing date February 28, 2011), under 37 CFR 1.378(c), to accept the unintentionally delayed payment of a maintenance fee for the above-identified patent.

The petition is GRANTED.

This patent expired on February 28, 2009, for failure to pay the 7 ½ year maintenance fee. A petition under 37 CFR 1.378(c) must be filed within twenty-four months after the six month grace period specified in 35 USC 41(b). The patent issued on February 27, 2001. The six month grace period for the 7 ½ year maintenance fee expired on February 28, 2009.

A review of the record indicates that a petition under 37 CFR 1.378(c) was filed via Certificate of Mailing on February 28, 2011. Pursuant to 37 CFR 1.7 Times for taking action; Expiration on Saturday, Sunday, or Federal holiday states: (a) Whenever periods of time are specified in this part in days, calendar days are intended. When the day, or the last day fixed by statute or by or under this part for taking any action or paying any fee in the United States Patent and Trademark Office falls on Saturday, Sunday, or on a Federal holiday within the District of Columbia, the action may be taken, or the fee paid, on the next succeeding business day which is not a Saturday, Sunday, or a Federal holiday. See § 1.304 for time for appeal or for commencing civil action. Therefore, since this petition was submitted within twenty-four months after the six-month grace period provided in 37 CFR 1.362(e), the petition was timely filed under the provisions of 37 CFR 1.378(c).
The maintenance fee is hereby accepted and the above-identified patent is reinstated as of the mail date of this decision.

Telephone inquiries concerning this decision should be directed to the undersigned at (571) 272-6059.

A. Kelley-Collier

Alicia Kelley-Collier
Petitions Examiner
Office of Petitions

UNITED STATES PATENT AND TRADEMARK OFFICE

Commissioner for Patents
United States Patent and Trademark Office
P.O. Box 1450
Alexandria, VA 22313-1450
www.uspto.gov

MATHEW R P PERRONE JR
210 SOUTH MAIN STREET
ALQONQUIN IL 60102-2639

Paper No. 11

MAILED

JUN 20 2011

OFFICE OF PETITIONS

In re Patent No. 6,385,814 :
Issue Date: May 14, 2002 :
Application No. 09/440,879 : ON PETITION
Filed: November 16, 1999 :
Attorney Docket No. 99.00076 :

This is a decision on the petition under 37 CFR 1.378(c), filed March, 9, 2011, to accept the delayed payment of a maintenance fee for the above-identified patent.

The petition is **DISMISSED**.

If reconsideration of this decision is desired, a petition for reconsideration under 37 CFR 1.378(e) must be filed within TWO (2) MONTHS from the mail date of this decision. No extension of this two-month time limit can be granted under 37 CFR 1.136(a) or (b). This is **not** a final agency action within the meaning of 5 U.S.C. § 704.

Any petition for reconsideration of this decision must be accompanied by the petition fee of $400 as set forth in 37 CFR 1.17(f). The petition for reconsideration must include the lacking item(s) noted below, since, after a decision on the petition for reconsideration, no further reconsideration or review of the matter will be undertaken by the Director.

The patent issued May 14, 2002. The second (7 1/2 year) maintenance fee was due November 14, 2009 and could have been paid from May 14, 2009 through November 14, 2009, or with a surcharge during the period from November 15, 2009 through May 14, 2010. Accordingly, the patent expired at midnight May 15, 2010, for failure to timely submit the first maintenance fee.

A petition to accept the unintentionally delayed payment of a maintenance fee under 35 U.S.C. 41(c) and 37 CFR 1.378(c) must be accompanied by: (1) a statement that the delay was unintentional; (2) payment of the appropriate maintenance fee, unless previously submitted; (3) payment of the surcharge set forth in 37 CFR 1.20(i)(2). This petition lacks item (1) above.

37 CFR 1.378 (d) states that any petition under this section must be signed by an attorney or agent registered to practice before the U.S. Patent and Trademark Office, or by the patentee, the assignee, or other party of interest. The petition was signed by Richard B. Karl who is identified as the assignee. However this signature is not acceptable as it is not in compliance with 37 CFR 3.73(b).

Petitioner was mistakenly charged large entity maintenance fees. The difference has been refunded to petitioner's deposit account.

Further correspondence with respect to this matter should be addressed as follows:

By Mail:
Mail Stop PETITION
Commissioner for Patents
Post Office Box 1450
Alexandria, VA 22313-1450

By hand:
U. S. Patent and Trademark Office
Customer Service Window, Mail Stop Petitions
Randolph Building
401 Dulany Street
Alexandria, VA 22314

The centralized facsimile number is (571) 273-8300.

Telephone inquiries should be directed to Carl Friedman at (571)272-6842.

Carl Friedman
Petitions Examiner
Office of Petitions

UNITED STATES PATENT AND TRADEMARK OFFICE

Commissioner for Patents
United States Patent and Trademark Office
P.O. Box 1450
Alexandria, VA 22313-1450
www.uspto.gov

MAILED

MAY 16 2011

OFFICE OF PETITIONS

OSTROLENK FABER GERB & SOFFEN
1180 AVENUE OF THE AMERICAS
NEW YORK NY 10036-8403

In re Patent No. 6,200,277
Issue Date: March 13, 2001
Application No. 09/441,226
Filed: November 15, 1999
Attorney Docket No. V1025/20023

ON PETITION

This is a decision on the petition under 37 CFR 1.378(c), filed March 23, 2011, to accept the unintentionally delayed payment of a maintenance fee for the above-identified patent.

The petition is **GRANTED**.

This patent expired on March 13, 2009, for failure to pay the seven and one-half year maintenance fee. Since this petition was submitted within twenty-four months after the six-month grace period provided in 37 CFR 1.362(e), the petition was timely filed under the provisions of 37 CFR 1.378(c).

The maintenance fee is hereby accepted and the above-identified patent is reinstated as of the mail date of this decision.

It is not apparent whether the person signing the statement of unintentional delay was in a position to have firsthand or direct knowledge of the facts and circumstances of the delay at issue. Nevertheless, such statement is being treated as having been made as the result of a reasonable inquiry into the facts and circumstances of such delay. In the event that such an inquiry has not been made, petitioner must make such an inquiry. If such inquiry results in the discovery that the delay in paying the maintenance fee under 37 CFR 1.378(c) was intentional, petitioner must notify the Office.

There is no indication that the person signing the petition was ever given a power of attorney to prosecute the application. If the person signing the petition desires to receive future

correspondence regarding this application, the appropriate power of attorney document must be submitted.

Telephone inquiries concerning this decision should be directed to the undersigned at (571) 272-6735.

The patent file is being referred to Files Repository.

/Diane C. Goodwyn/
Diane C. Goodwyn
Petitions Examiner
Office of Petitions

UNITED STATES PATENT AND TRADEMARK OFFICE

Commissioner for Patents
United States Patent and Trademark Office
P.O. Box 1450
Alexandria, VA 22313-1450
www.uspto.gov

Paper No. 8

RICHARD M GOLDBERT ESQ
25 EAST SALEM STREET
SUITE 419
HACKENSACK NJ 07601

MAILED

SEP 23 2010

OFFICE OF PETITIONS

In re Patent No. 6,223,937
Issued: May 1, 2001
Application No.: 09/441,869
Filing Date: November 17, 1999
Attorney Docket No. **337/1/003**

: REQUEST FOR INFORMATION

This is a request for information in response to the petition under 37 CFR 1.378(b), filed June 29, 2010, to reinstate the above-cited patent.

Petitioner is allowed a non-extendable period for reply of **TWO (2) MONTHS** from the mailing date of this communication to provide a response. The response should be titled, "Response to Request for Information." If no response is provided within the period set forth, a decision will be made solely on the merits as set forth in the petition under 37 CFR 1.378(b) filed September 28, 2009. No additional fees are due.

The patent issued May 1, 2001. The 3.5 year maintenance fee could have been paid from May 1, 2004, through November 1, 2004, or with a surcharge, as authorized by 37 CFR 1.20(h), during the period from November 2, 2004, to May 1, 2005. Petitioner did not do so. Accordingly, the patent expired at midnight on May 1, 2005. It is also noted that the 7.5-year maintenance fee was missed as it was not paid by May 1, 2009.

Petitioner is required to address the following points:

- A successful petition under 37 CFR 1.378(b) must affirmatively identify the cause of the delay in paying the maintenance fee and provide a statement from every person with first-hand knowledge of the circumstances surrounding the delay in paying the maintenance fee. Petitioner must provide statements from any person who may have been charged with paying the maintenance fee and statements from any person with first-hand knowledge of the circumstances surrounding the failure to pay the maintenance fee. This would include a statement from Ms. Patrice Michele Potter, who was the paralegal that petitioner implies was responsible for the docketing error which resulted in non-payment of the 3.5-year and 7.5-year maintenance fees for the subject patent.

- 37 CFR 1.378(b)(3) sets forth that a petition submitted under this portion of the Code of Federal Regulations must include a showing which is described as follows:

A showing that the delay was unavoidable since reasonable care was taken to ensure that the maintenance fee would be paid timely and that the petition was filed promptly after the patentee was notified of, or otherwise became aware of, the expiration of the patent. The showing must enumerate the steps taken to ensure timely payment of the maintenance fee, the date and the manner in which patentee became aware of the expiration of the patent, and the steps taken to file the petition promptly.

Petitioner must, therefore, describe the steps that were in place at Baker Daniels to ensure that the maintenance fee was timely paid. This showing would include an explanation of who at Baker Daniels was responsible for paying tracking and paying the maintenance fee and the method this person, or entity, used for tracking the maintenance fee.

- Section 711.03(c)(2) of the Manual of Patent Examining Procedure, provides, in pertinent part that:

In addition, decisions on revival are made on a "case-by-case basis, taking all the facts and circumstances into account." *Smith v. Mossinghoff*, 671 F.2d 533, 538, 213 USPQ 977, 982 (D.C. Cir. 1982). Finally, a petition cannot be granted where a petitioner has failed to meet his or her burden of establishing that the delay was "unavoidable." *Haines v. Quigg*, 673 F. Supp. 314, 316-17, 5 USPQ2d 1130, 1131-32 (N.D. Ind. 1987).

A delay resulting from an error (e.g., a docketing error) on the part of an employee in the performance of a clerical function may provide the basis for a showing of "unavoidable" delay, provided it is shown that:

(A) the error was the cause of the delay at issue;

(B) there was in place a business routine for performing the clerical function that could reasonably be relied upon to avoid errors in its performance; and

(C) the employee was sufficiently trained and experienced with regard to the function and routine for its performance that reliance upon such employee represented the exercise of due care.

A delay resulting from an error, such a docketing error, on the part of an employee in the performance of a clerical function may provide the basis for a showing of unavoidable delay. Such a showing should identify the specific error, the individual who made the error, and the business routine in place for performing the action which resulted in the error. The showing must establish that the individual who erred was sufficiently trained and experienced with regard to the function and routine for its performance that reliance upon such employee represented the exercise of due care. The showing should include information regarding the training provided to the personnel responsible for the docketing error, degree of supervision of their work, examples of other work functions carried out, and checks on the described work which were used to assure proper execution of assigned task.

Petitioner has indicated that CPI docket system was used by Baker Daniels in docketing and tracking the maintenance fees for the subject patent Accordingly, petitioner must address the following points:

- Provide additional information regarding the Computer Packages Inc. Patent Management System (CPi) and its use in the industry and why it is a reliable system.
- Explain the process used to convert petitioner's data to the CPi system, more specifically what data integrity and error checks were used in the process.

- Explain, in detail, the tests conducted to verify the completeness and reliability of the data converted to the CPi system and provides statements from employees who were involved with the conversion process.
- Explain how the data entry was accomplished and how the error occurred.
- Provide a statement from Ms. Potter, or another person with first-hand knowledge of the failure, explaining how the docket error occurred.

The assignee must be empowered pursuant to 37 CFR 3.73(b) as the assignee for the subject patent is seeking to take action in the patent matter. Accordingly, the response to this inquiry must be accompanied by a 3.73(b) statement, which is enclosed for petitioner's convenience.

Further, it does not appear that the Barnes & Thornburg, LLP has been given power of attorney in this matter. Notwithstanding, a courtesy copy of this inquiry is being mailed to Barnes and Thornburg, LLP. All future correspondence will be mailed solely to the address on record until appropriate written instructions to the contrary are received.

Further correspondence with respect to this matter should be addressed as follows:

By mail: Commissioner for Patent
Mail Stop Petitions
Box 1450
Alexandria, VA 22313-1460

By facsimile: (571) 273-8300
Attn: Office of Petitions

Telephone inquiries concerning this matter should be directed to the undersigned at (571) 272-3222.

/Kenya A. McLaughlin/

Kenya A. McLaughlin
Petition Attorney
Office of Petitions

Enclosure: Form PTO/SB/96

Cc:
Gerard T. Gallagher
Barnes & Thornburg, LLP
100 North Michigan
600 1st Source Bank center
South Bend, Indiana 46601-1632

PTO/SB/96 (07-09)
Approved for use through 07/31/2012. OMB 0651-0031
U.S. Patent and Trademark Office; U.S. DEPARTMENT OF COMMERCE
Under the Paperwork Reduction Act of 1995, no persons are required to respond to a collection of information unless it displays a valid OMB control number.

STATEMENT UNDER 37 CFR 3.73(b)

Applicant/Patent Owner: _____

Application No./Patent No.: _____ Filed/Issue Date: _____

Titled:

_____, a _____
(Name of Assignee) (Type of Assignee, e.g., corporation, partnership, university, government agency, etc.

states that it is:

1. ☐ the assignee of the entire right, title, and interest in;

2. ☐ an assignee of less than the entire right, title, and interest in
(The extent (by percentage) of its ownership interest is _____ %); or

3. ☐ the assignee of an undivided interest in the entirety of (a complete assignment from one of the joint inventors was made)

the patent application/patent identified above, by virtue of either:

A. ☐ An assignment from the inventor(s) of the patent application/patent identified above. The assignment was recorded in the United States Patent and Trademark Office at Reel _____, Frame _____, or for which a copy therefore is attached.

OR

B. ☐ A chain of title from the inventor(s), of the patent application/patent identified above, to the current assignee as follows:

1. From: _____ To: _____

The document was recorded in the United States Patent and Trademark Office at
Reel _____, Frame _____, or for which a copy thereof is attached.

2. From: _____ To: _____

The document was recorded in the United States Patent and Trademark Office at
Reel _____, Frame _____, or for which a copy thereof is attached.

3. From: _____ To: _____

The document was recorded in the United States Patent and Trademark Office at
Reel _____, Frame _____, or for which a copy thereof is attached.

☐ Additional documents in the chain of title are listed on a supplemental sheet(s).

☐ As required by 37 CFR 3.73(b)(1)(i), the documentary evidence of the chain of title from the original owner to the assignee was, or concurrently is being, submitted for recordation pursuant to 37 CFR 3.11.

[NOTE: A separate copy (*i.e.*, a true copy of the original assignment document(s)) must be submitted to Assignment Division in accordance with 37 CFR Part 3, to record the assignment in the records of the USPTO. See MPEP 302.08]

The undersigned (whose title is supplied below) is authorized to act on behalf of the assignee.

_____ _____
Signature Date

_____ _____
Printed or Typed Name Title

This collection of information is required by 37 CFR 3.73(b). The information is required to obtain or retain a benefit by the public which is to file (and by the USPTO to process) an application. Confidentiality is governed by 35 U.S.C. 122 and 37 CFR 1.11 and 1.14. This collection is estimated to take 12 minutes to complete, including gathering, preparing, and submitting the completed application form to the USPTO. Time will vary depending upon the individual case. Any comments on the amount of time you require to complete this form and/or suggestions for reducing this burden, should be sent to the Chief Information Officer, U.S. Patent and Trademark Office, U.S. Department of Commerce, P.O. Box 1450, Alexandria, VA 22313-1450. DO NOT SEND FEES OR COMPLETED FORMS TO THIS ADDRESS. **SEND TO: Commissioner for Patents, P.O. Box 1450, Alexandria, VA 22313-1450.**

If you need assistance in completing the form, call 1-800-PTO-9199 and select option 2.

Privacy Act Statement

The **Privacy Act of 1974 (P.L. 93-579)** requires that you be given certain information in connection with your submission of the attached form related to a patent application or patent. Accordingly, pursuant to the requirements of the Act, please be advised that: (1) the general authority for the collection of this information is 35 U.S.C. 2(b)(2); (2) furnishing of the information solicited is voluntary; and (3) the principal purpose for which the information is used by the U.S. Patent and Trademark Office is to process and/or examine your submission related to a patent application or patent. If you do not furnish the requested information, the U.S. Patent and Trademark Office may not be able to process and/or examine your submission, which may result in termination of proceedings or abandonment of the application or expiration of the patent.

The information provided by you in this form will be subject to the following routine uses:

1. The information on this form will be treated confidentially to the extent allowed under the Freedom of Information Act (5 U.S.C. 552) and the Privacy Act (5 U.S.C 552a). Records from this system of records may be disclosed to the Department of Justice to determine whether disclosure of these records is required by the Freedom of Information Act.
2. A record from this system of records may be disclosed, as a routine use, in the course of presenting evidence to a court, magistrate, or administrative tribunal, including disclosures to opposing counsel in the course of settlement negotiations.
3. A record in this system of records may be disclosed, as a routine use, to a Member of Congress submitting a request involving an individual, to whom the record pertains, when the individual has requested assistance from the Member with respect to the subject matter of the record.
4. A record in this system of records may be disclosed, as a routine use, to a contractor of the Agency having need for the information in order to perform a contract. Recipients of information shall be required to comply with the requirements of the Privacy Act of 1974, as amended, pursuant to 5 U.S.C. 552a(m).
5. A record related to an International Application filed under the Patent Cooperation Treaty in this system of records may be disclosed, as a routine use, to the International Bureau of the World Intellectual Property Organization, pursuant to the Patent Cooperation Treaty.
6. A record in this system of records may be disclosed, as a routine use, to another federal agency for purposes of National Security review (35 U.S.C. 181) and for review pursuant to the Atomic Energy Act (42 U.S.C. 218(c)).
7. A record from this system of records may be disclosed, as a routine use, to the Administrator, General Services, or his/her designee, during an inspection of records conducted by GSA as part of that agency's responsibility to recommend improvements in records management practices and programs, under authority of 44 U.S.C. 2904 and 2906. Such disclosure shall be made in accordance with the GSA regulations governing inspection of records for this purpose, and any other relevant (*i.e.*, GSA or Commerce) directive. Such disclosure shall not be used to make determinations about individuals.
8. A record from this system of records may be disclosed, as a routine use, to the public after either publication of the application pursuant to 35 U.S.C. 122(b) or issuance of a patent pursuant to 35 U.S.C. 151. Further, a record may be disclosed, subject to the limitations of 37 CFR 1.14, as a routine use, to the public if the record was filed in an application which became abandoned or in which the proceedings were terminated and which application is referenced by either a published application, an application open to public inspection or an issued patent.
9. A record from this system of records may be disclosed, as a routine use, to a Federal, State, or local law enforcement agency, if the USPTO becomes aware of a violation or potential violation of law or regulation.

UNITED STATES PATENT AND TRADEMARK OFFICE

Commissioner for Patents
United States Patent and Trademark Office
P.O. Box 1450
Alexandria, VA 22313-1450
www.uspto.gov

MAILED

APR 29 2011

OFFICE OF PETITIONS

BARNES & THORNBURG LLP
600 1ST SOURCE BANK CENTER
100 NORTH MICHIGAN
SOUTH BEND IN 46601-1632

In re Patent No. 6,223,937 :
Issued: May 1, 2001 : ON PETITION
Application No.: 09/441,869 :
Filing Date: November 17, 1999 :
Attorney Docket No. **337/1/003** :

This is in response to the "Response to Request for Information" filed November 23, 2010, and a decision on the petition under 37 CFR 1.378(b), filed June 29, 2010, to reinstate the above-cited patent.

The petition is **dismissed**.

The patent issued May 1, 2001. The 3.5 year maintenance fee could have been paid from May 1, 2004, through November 1, 2004, or with a surcharge, as authorized by 37 CFR 1.20(h), during the period from November 2, 2004, to May 1, 2005. Petitioner did not do so. Accordingly, the patent expired at midnight on May 1, 2005. It is also noted that the 7.5-year maintenance fee was missed as it was not paid by May 1, 2009. A petition under 37 CFR 1.378(b) was filed June 29, 2010. A "Request for Information" was mailed on September 23, 2010.

A grantable petition under 37 CFR 1.378(b) must be accompanied by a showing to the satisfaction of the Commissioner that the entire delay in paying the required maintenance fee from the due date for the fee until the filing of a grantable petition pursuant to this paragraph was unavoidable. The showing of record is not sufficient to establish to the satisfaction of the Commissioner that the delay was unavoidable within the meaning of 37 CFR 1.378(b).

Opinion

Petitioner must establish that petitioner treated the patent the same as a reasonable and prudent person would treat his or her most important business.

The general standard applied by the Office requires petitioner to establish that petitioner treated the patent the same as a reasonable and prudent person would treat his or her most important business.[1]

[1]The Commissioner is responsible for determining the standard for unavoidable delay and for applying that standard. 35 U.S.C. 41(c)(1) states, "The Commissioner may accept the payment of any maintenance fee . . . at any time . . .if the delay is shown *to the satisfaction of the Commissioner* to have been unavoidable." (emphasis added).

"In the specialized field of patent law, . . . the Commissioner of Patent and Trademarks is primarily responsible for the application and enforcement of the various narrow and technical statutory and regulatory provisions. His interpretation of those provisions is entitled to considerable deference." Rydeen v. Quigg, 748 F. Supp. 900, 904, 16 U.S.P.Q2d (BNA) 1876 (D.D.C. 1990), aff'd without opinion Rule 36), 937 F.2d 623 (Fed Cir. 1991) (citing Morganroth v. Quigg, 885 F.2d 843, 848, 12 U.S.P.Q.2d agencys' interpretation of a statute it administers is entitle to deference"); see also Chevron U.S.A. Inc, v. Natural Resources Defense Counsil, Inc., 467 U.S. 837, 844, 81 L. Ed. 694, 104 S. Ct. 2778 (1984) ("if the statute s silent or

However, "[t]he question of whether an applicant's delay in prosecuting an application was unavoidable [will]be decided on a case-by-case basis, taking all of the facts and circumstances into account."[2] Nonawarness of the content of, or misunderstanding of PTO statutes, PTO rules, the MPEP, or the Official Gazette notices does not constitute unavoidable delay.[3] The statute requires a "showing" by petitioner, therefore; petitioner has the burden of proof. The decision will be based solely on the written, administrative record in existence. It is not enough that the delay was unavoidable; petitioner must prove that the delay was unavoidable. A petition will not be granted if petitioner provides insufficient evidence to "show" that the delay was unavoidable.

Petitioner is responsible for possessing knowledge of the need to pay maintenance fees and the due dates for such fees, Petitioner is responsible for instituting a reliable docketing system to remind him or her when maintenance fees become due.

Petitioner is responsible for having knowledge of the need to pay maintenance fees and knowing when the fees are due.[4] The Office has no duty to notify a patentee of the requirement to pay maintenance fees or to notify patentee when a maintenance fee is due.[5] Even if the Office were required to provide notice to

---

ambiguous with respect to the specific issue, the question for the court is whether the agency's answer is based on a permissible construction of the statute."))

"The critical phrase 'unless it be shown to the satisfaction of the Commissioner that such delay was unavoidable' has remained unchanged since first enacted in 1861." Smith v. Mossinghoff, 671 F.2d 533, 538, 213 U.S.P.Q. (BNA) 977 (D.C. Cir. 1982). The standard for "unavoidable" delay for reinstating a patent is the same as the unavoidable standard for reviving an application. See Ray v. Lehman, 55 F. 3d 606, 608-609, 34 U.S.P.Q.2d (BNA) 1786, 1781 (Fed Cir. 1995) (Citing In re patent No. 4,409, 763, 7 U.S.P.Q.2d BNA) 1798, 1800 (Comm'r Pat. 1990; Smith v. Mossinghoff, 671 F. 2d 533, 538, 213 U.S.P. Q. (BNA) 977 (D.C. Cir. 1982). The court in In re Mattullath, accepted the standard which had been proposed by Commissioner Hall which "requires no more or greater care or diligence than is generally used and observed by prudent and careful men in relation to their most important business." In re Mattullath, 38 App. D.C. 497, 514-515 (1912) (quoting Ex parte Pratt, 1887 Dec. Comm'r Pat 31, 32-33 (1887)).

[2]Smith v. Mossinghoff, 671 F.2d 533, 538, 213 U.S.P.Q. (BNA) 977 (1982).

[3]See Smith v. Mossinghoff, 671 F. 2d 533, 538, 213 U.S.P.Q. (BNA) 977 (Fed. Cir. 1982) (citing Potter v. Dann, 201 U.S.P.Q. (BNA) 574 (D.D.C. 1978) for the proposition that counsel's nonawarness of PTO rules does not constitute "unavoidable " delay)); Vincent v. Mossinghoff, 1985 U.S. Dist. LEXIS 23119, 13, 230 U.S.P.Q. (BNA) 621 (D.D.C. 1985) (plaintiffs, through their counsel's action, or their own, must be held responsible for having noted the MPEP section and Official Gazette notices expressly stating that the certified mailing procedures outlined in 37 CFR 1.8(a) do not apply to continuation applications.) (Emphasis added).

[4]Nonawarness of PTO statutes, PTO rules, the MPEP, or Official Gazette notices, which state maintenance fee amounts and dates they are due does not constitute unavoidable delay. See Smith v. Mossinghoff, 671 F.2d 533, 538, 213 U.S.P.Q. *BNA) 977 (Fed. Cir. 1982) (citing Potter v. Dann, 201 U.S.P.Q. (BNA) 574 (D.D.C. 1978) for the proposition that counsel's nonawarness of PTO rules does not constitute "unavoidable" delay)); Vincent v. Mossinghoff, 1985 U.S. Dist. LEXIS 23119, 13, 230 U.S.P.Q. (BNA) 621 (D.D.C. 1985) (Plaintiffs, through their counsel's actions, or their own must be held responsible for having noted the MPEP section and Official Gazette notices expressly stating that the certified mailing procedures outlined in 37 CFR 1.8(a) do not apply to continuation applications.) (Emphasis added).

Petitioner must act as a reasonable and prudent person in relation to his most important business. Upon obtaining the patent, a reasonable and prudent person, in relation to his most important business, would become familiar with the legal requirements of that business, in this case, the requirement to pay maintenance fees. In addition, a reasonable and prudent individual would read the patent itself and thereby become aware of the need to pay maintenance fees and the fact that such fee amounts are sometimes changed by law or regulation.

[5]Congress expressly conditioned §§ 133 and 151 [of the United States Code] on a specific type of notice, while no such notice requirements are written into § 41(c) . . . [T]he Commissioner's no timely-notice interpretation." Ray v. Comer, 1994 U.S. Dist. LEXIS 21478, 8-9 (1994), *aff'd on other grounds* Ray v. Lehman, 55 F.3d 606, 34 USPQ2d 1786 (Fed. Cir. 1995) (Citing Rydeen v. Quigg, 748 F. Supp. 900, 905 (1990), Chevron U.S.A. Inc. v. Natural Resources Defense Council, Inc., 467 U.S.

applicant of the existence of maintenance fee requirements, such notice is provided by the patent itself.[6]

A reasonable and prudent person, aware of the existence of maintenance fees, would not rely on maintenance fee reminders or on memory to remind him or her when payments would fall due several years in the future. Instead, such an individual would implement a reliable and trustworthy tracking system to keep track of the relevant dates.[7] The individual would also take steps to ensure that the patent information was correctly entered into the tracking system.

Application of the unavoidable standard to the present facts

By the instant petition, petitioner argues that the above-cited patent should be reinstated because the delay in paying the 3.5-year maintenance fee was unavoidable due to a docketing and clerical error that occurred in the offices of Baker Daniels, the law firm charged with tracking and paying the maintenance fee for the subject patent. Specifically, petitioner surmises that Ms. Patrice Michele Potter, an employee of Baker Daniels, changed the status of the subject patent matter in the Computer Packages Inc. Patent Management System (CPi) to "abandoned" resulting in no indications by CPi that the maintenance fee for the patent was coming due. Petitioner maintains CPi is sufficiently reliable and reliance on it represented the exercise of due care. Further, petitioner concludes that clerical error of Ms. Potter was an isolated mistake on the part of Ms. Potter who is otherwise sufficiently trained and knowledgeable of the CPi system and that reliance on Ms. Potter represented the exercise of due care in the maintenance of the patent.

837, 81 L. ed. 2d 694, 104 S. Ct. 2778 (1984)). "The Court concludes as it did in Rydeen, that as a constitutional matter, 'plaintiff was not entitled to any notice beyond publication of the statute." Id. at 3 (citing Rydeen v. Quigg, 748 F. Supp. at 906, Texaco v. Short, 454 U.S. 516, 536, 70 L. Ed. 2d 738, 102 S. Ct. 781 (1982)).

The Patent Office, as a courtesy tries to send maintenance fee reminders and notices of patent expiration to the address of record. However, the failure to receive the reminder notice, and the lack of knowledge of the requirement to pay the maintenance fee, will not shift the burden of monitoring the time for paying a maintenance fee from the patentee to the Office. See MPEP 2575, 2540, 2590. Petitioner does not have a right to a personalized notice that this patent will expire if a certain maintenance fee is not paid, as the publication of the statute was sufficient notice. See Rydeen v. Quigg, 748 F. Supp. 900, 907 (1990). the ultimate responsibility for keeping track of maintenance fee states lies with the patentee, not the USPTO. Since the mailing of Notices by the Office is completely discretionary and not a requirement imposed by Congress, accepting an argument that failure to receive a Notice is unavoidable delay would result in all delays being unavoidable should the Office discontinue the policy. All petitions could allege non-receipt of the reminder, and therefore all petitions could be granted. This was clearly not the intent of Congress in the creation of the unavoidable standard.

[6]See Ray v. Lehman, 55 F.3d 606, 610; 34 USPQ2d 1786, 1789 (Fed. Cir. 1995). The Letters of Patent contain a Maintenance Fee Notice that warns that the patent may be subject to maintenance fees if the application was filed on or after December 12, 1980. While it is unclear as to who was and is in actual possession of the patent, petitioner's failure to read the Notice does not vitiate the Notice, nor does the delay resulting from such failure to read the Notice establish unavoidable delay.

[7] 37 CFR 1.378(b)(3) precludes acceptance of a late maintenance fee for a patent unless a petitioner can demonstrate that steps were in place to monitor the maintenance fee. The federal Circuit has specifically upheld the validity of this regulation. Ray v. Lehman, 55 F.3d 606, 609; 34 USPQ2d (BNA) 1786 (Fed.Cir. 1995). In Ray v. Lehman, petitioner claimed that he had not known of the existence of the maintenance fees and therefore had no steps in place to pay such fees. The petitioner therefore argues that the PTO's regulation, 37 CFR 1.37(b)(3), supra, arguing that it 'creates a burden that goes well beyond what is reasonably prudent." We disagree, The PTOs' regulation merely sets forth how one is to prove that he was reasonably prudent, i.e., by showing what steps he took to ensure that the maintenance fee would be timely paid, and the steps taken in seeking to reinstate the patent. We do not see these requirements additional to proving unavoidable delay, but as the very elements of unavoidable delay." Id.

The petitioner's argument and statements have been considered, but are not persuasive as petitioner has not made the "showing" that is required to satisfy the requirements of 37 CFR 1.378(b). Further to this point, Section 711.03(c)(2) provides, in pertinent part that:

> In addition, decisions on revival are made on a "case-by-case basis, taking all the facts and circumstances into account." *Smith v. Mossinghoff*, 671 F.2d 533, 538, 213 USPQ 977, 982 (D.C. Cir. 1982). Finally, a petition cannot be granted where a petitioner has failed to meet his or her burden of establishing that the delay was "unavoidable." *Haines v. Quigg*, 673 F. Supp. 314, 316-17, 5 USPQ2d 1130, 1131-32 (N.D. Ind. 1987).

> A delay resulting from an error (e.g., a docketing error) on the part of an employee in the performance of a clerical function may provide the basis for a showing of "unavoidable" delay, provided it is shown that:
>
> (A) the error was the cause of the delay at issue;
>
> (B) there was in place a business routine for performing the clerical function that could reasonably be relied upon to avoid errors in its performance; and
>
> (C) the employee was sufficiently trained and experienced with regard to the function and routine for its performance that reliance upon such employee represented the exercise of due care.

Petitioner states that:

> [t]o ensure that the dates in the CPI docket system were correct, the paralegal would print out a sheet that summarized the docket data entries for each matter. That sheet together with the physical file was then routed to the responsible attorney. The responsible attorney verified that the docket entries were correct...Baker & Daniels also used a periodic audit procedure to verify that data in the docket was accurate. All intellectual property paralegals and docket clerks throughout Baker & Daniels would periodically travel to the office whose docket data entry was being audited. One of the paralegals would run a docket report showing the docket entries for all active patent matters. The paralegals and docket clerks then reviewed the physical files for each matter and confirmed the accuracy of the data entered into the docket system.

Excerpt taken from "Response to Request for Information" filed November 23, 2010, page 7.

Despite the procedures explained by petitioner for ensuring the accuracy of data in the docket entries as set forth above, the status of the subject patent was incorrectly changed to "abandoned" and remained "abandoned" for eight years from December 26, 2002, when the entry was changed. It is noted that only five of those years are material to the instant petition since the patent was allowed to expire in 2005 as a result of the clerical mistake. Arguably, the status of the subject patent may have still been reflected as "abandoned" in the records of Baker & Daniels had the assignee not contacted counsel to discuss enforcing the subject patent against a third party. Neither the petition under 37 CFR 1.378(b) nor the "Response to Request for Information" explains how the incorrect "abandoned" status for the patent persisted for such an extended period given then checks and cross-checks employed by Baker Daniels as set forth above. It is noted that a successful petition under 37 CFR 1.378(b) requires that petitioner establish that the entire delay in paying the maintenance fee—from the due date for the maintenance fee until the filing of a grantable petition under 37 CFR 1.378(b) was unavoidable. Petitioner has not established that the entire delay was unavoidable as it is reasonable to expect that at some point in the five years since the patent expired the checks and cross-checks employed by Baker Daniels would have revealed that the status of the subject patent was incorrectly cited as "abandoned" and that the assignee

gave no instruction to Baker Daniels to "abandoned" the patent. Petitioner has offered no explanation for this apparent failing of the docketing and clerical procedures employed by Baker Daniels or refuted the conclusion that this failing belies the assertion that the entire delay in paying the maintenance fee was unavoidable.

Further, a review of the docket record for the subject patent as maintained by Baker Daniels (Petitioner's "Exhibit A" of the "Response to the Request for Information" reveals that on December 26, 2002, User ID "pmpotter" which is presumed to be Ms. Potter, entered the due dates for the 3.5-year, 7.5-year, and 11.5-year maintenance fees for the subject patent. However, the first screen, which provides the identifying and status information reflects that the patent is "Abandoned". Ms. Potter states in her declaration, which petitioner's "Exhibit C" that:

> 11. I have no memory of having done so, but based on my review of the docket entries for the '937 Patent, I conclude that on December 26, 2002, I erroneously updated the "Application Status field in the docket entry for the '937 Patent to "Abandoned...

Excerpt taken from "Declaration of Patrice M. Potter" filed November 23, 2010.

Petitioner has offered no explanation for how two such inconsistent actions can be taken in the docket record. On one hand, Ms. Potter enters the maintenance fee payment schedule for the subject patent and on the other Ms. Potter changes that status of the application to abandoned indicating that no maintenance fee reminders should be generated. In establishing that the delay in paying the 3.5-year maintenance fee was unavoidable because of a docketing/clerical error in an otherwise reliable employee and reliable system, petitioner should explain why the docketing system would not have warned Ms. Potter of the obvious inconsistency of these actions and asked for verification before implementing the change in the system. If the docketing system generated such a warning, petitioner should explain why Ms. Potter would not have heeded the warning.

It is further noted that the subject patent was expired for five years before the expiration was discovered. It is further noted that the expiration of the patent was not discovered by the patent agent, but by a happenstance conversation between the assignee and other counsel. Arguably, in treating the patent as its' most important business, the exercise of diligence and prudence relative to the maintenance of the subject patent would dictate that petitioner initiate periodic checks as to the status of the patents maintained. If such a business routine were in place, the patent would likely not have remained expired for five years. The petition is silent as to any business routine in place that would safeguard against a patent being expired for extended periods of time. The apparent lack of such a safeguard further indicates that petitioner did not exercise the reasonable prudence and diligence in the maintenance of the patent which is the hallmark of establishing unavoidable delay as it is defined by 37 CFR 1.378(b).

Petitioner's Current Options

I. Petitioner may file a request for reconsideration.

If reconsideration of this decision is desired, a petition for reconsideration must be filed within TWO (2) MONTHS from the mail date of this decision.[8] The petition for reconsideration should be titled "Petition

---

A reasonable and prudent person would not rely on maintenance fee reminders from the Office for two reasons. First, the Office has indicated that such reminders are a mere courtesy and has reserved the right to discontinue such reminders at any time. Second, such reminders may be lost in the mail. A reasonable and prudent person, in regard to his most important business would not rely solely on reminders that the Office may or may not send which may or may not be lost in the mail.

for Reconsideration under 37 CFR 1.378(b)." Any petition for reconsideration for this decision must be accompanied by a non-refundable petition fee of $400.00 as set forth in 37 CFR 1.17(h).

After a decision on the petition for reconsideration, no further reconsideration or review of the matter will be undertaken by the Commissioner. It is, therefore, extremely important that petitioner supply any and all relevant information and documentation with the request for reconsideration. The Commissioner's decision will be based solely on the administrative record in existence. Petitioner should remember that is not enough that the delay was unavoidable; petitioner must prove that the delay was unavoidable. A petition will not be granted if petitioner provides insufficient evidence "to show" that the delay was unavoidable. If a request for reconsideration is filed, it must establish that the entire delay in the submission of the maintenance fee was unavoidable.

II. Petitioner may request a refund of the maintenance fee and surcharge which accompanied the petition.

Petitioner may request a refund of the maintenance fee and surcharge by writing to the Office of Finance, Refund Section, Commissioner for Patents, Washington, DC 20231. A copy of this decision should accompany petitioner's request.

Further correspondence with respect to this matter should be addressed as follows:

By mail: Commissioner for Patent
Mail Stop Petitions
Box 1450
Alexandria, VA 22313-1460

By facsimile: (571) 273-8300
Attn: Office of Petitions

Telephone inquiries concerning this decision should be directed to the undersigned at (571) 272-3222.

/Kenya A. McLaughlin/

Kenya A. McLaughlin
Petition Attorney
Office of Petitions

[8]No extension of this two-month time limit can be granted under 37 CFR 1.136(a) or (b). This is not a final agency action within the meaning of 5 U.S.C. § 704.

UNITED STATES PATENT AND TRADEMARK OFFICE

Commissioner for Patents
United States Patent and Trademark Office
P.O. Box 1450
Alexandria, VA 22313-1450
www.uspto.gov

MAILED

SEP 07 2011

OFFICE OF PETITIONS

BARNES & THORNBURG LLP
600 1ST SOURCE BANK CENTER
100 NORTH MICHIGAN
SOUTH BEND, IN 46601-1632

In re Patent No. 6,223,937
Issued: May 1, 2001
Application No.: 09/441,869
Filing Date: November 17, 1999
Attorney Docket No. **337/1/003**

: REQUEST FOR INFORMATION

This is a request for information in response to the petition under 37 CFR 1.378(b), filed June 28, 2011, to reinstate the above-cited patent.

Petitioner is allowed a non-extendable period for reply of **TWO (2) MONTHS** from the mailing date of this communication to provide a response. The response should be titled, "Response to Request for Information." If no response is provided within the period set forth, a decision will be made solely on the merits as set forth in the petitions currently of record. No additional fees are due.

The patent issued May 1, 2001. The 3.5 year maintenance fee could have been paid from May 1, 2004, through November 1, 2004, or with a surcharge, as authorized by 37 CFR 1.20(h), during the period from November 2, 2004, to May 1, 2005. Petitioner did not do so. Accordingly, the patent expired at midnight on May 1, 2005. It is also noted that the 7.5-year maintenance fee was missed as it was not paid by May 1, 2009.

Petitioner is required to address the following point:

- It is noted that in California Medial Products v. Technol Med. Prod., 921 F. Supp. 1219, 1259 (D.Del. 1995), the court determined, in part, that a patent holder's reliance upon an attorney does not provide the patent holder with an absolute defense, but rather shifts the focus to whether the attorney acted reasonably and prudently. It is noted that the subject patent was expired for five years before the first petition to reinstate the patent was filed. By the instant petition, and the prior petitions, petitioner appears to argue that the patent holder, Iron Out, Inc., bears no responsibility for the missed maintenance fee payment and subsequent five years that the patent remained expired. Certainly, a patent holder is entitled to retain a law firm to track and pay maintenance fees and to rely on the actions of that law firm. However, retaining a law firm to track and pay maintenance fees does not absolve the patent holder of any responsibility to treat the patent as its most important business especially in trying to establish that the entire delay in paying the maintenance fee was unavoidable—from the due date for the maintenance fee until the filing of a grantable petition under 37 CFR 1.378(b) or (e). Further, it is well established that a patent holder is bound by any errors that may have been committed by his attorney.

Notwithstanding, petitioner is required to address the point of whether it is reasonable to expect that, at some point during the five year period from May 2005 until June 2010, the patent holder may have performed its own audit to discover the expiration of the patent.

Further correspondence with respect to this matter should be addressed as follows:

By mail: Commissioner for Patent
Mail Stop Petitions
Box 1450
Alexandria, VA 22313-1460

By facsimile: (571) 273-8300
Attn: Office of Petitions

Telephone inquiries concerning this matter should be directed to the undersigned at (571) 272-3222.

/Kenya A. McLaughlin/

Kenya A. McLaughlin
Petition Attorney
Office of Petitions

UNITED STATES PATENT AND TRADEMARK OFFICE

Commissioner for Patents
United States Patent and Trademark Office
P.O. Box 1450
Alexandria, VA 22313-1450
www.uspto.gov

Weiss & Arons, LLP
1540 Route 202, Suite 8
Pomona NY 10970

MAILED

SEP 28 2011

OFFICE OF PETITIONS

In re Application of :
Brett D. Riggs :
Patent No. 6,956,952 :
Issued: October 18, 2005 :
Application No. 09/442,627 :
Filed: November 17, 1999 :
Attorney Docket No. **132-005PAC1** :

NOTICE

This is a notice regarding your request filed September 12, 2011, for acceptance of a fee deficiency submission under 37 CFR 1.28.

The Office no longer investigates or rejects original or reissue applications under 37 CFR 1.56. **1098 Off. Gaz. Pat. Office 502 (January 3, 1989)**. Therefore, nothing in this Notice is intended to imply that an investigation was done.

Your fee deficiency submission under 37 CFR 1.28 is hereby **ACCEPTED**.

This patent is no longer entitled to small entity status. Accordingly, all future fees paid in this patent must be paid at the large entity rate.

Inquiries related to this communication should be directed to the undersigned at (571) 272-4584.

/JoAnne Burke/
JoAnne Burke
Petitions Examiner
Office of Petitions

UNITED STATES PATENT AND TRADEMARK OFFICE

Commissioner for Patents
United States Patent and Trademark Office
P.O. Box 1450
Alexandria, VA 22313-1450
www.uspto.gov

In re Patent No. 6449749
Issue Date: September 10,2002
Application No. 09442699
Filed: November 18,1999
Attorney Docket No. D5116-00006

: DECISION GRANTING PETITION
: UNDER 37 CFR 1.378(c)

This is a decision on the electronic petition, filed November 16,2010 ,under 37 CFR 1.378(c) to accept the unintentionally delayed payment of the 7.5 year maintenance fee for the above-identified patent.

The petition is **GRANTED**.

The maintenance fee is accepted, and the above-identified patent reinstated as of November 16,2010 . This decision also constitutes notice that the fee has been accepted. An electronic copy of the petition and this decision has been created as an entry in the Image File Wrapper. Nevertheless, petitioner should print and retain an independent copy.

Telephone inquiries related to this electronic decision should be directed to the Electronic Business Center at 1-866-217-9197.

PTO/SB/66 (03-09)
Approved for use through 03/31/2012. OMB 0651-0016
U.S. Patent and Trademark Office: U.S. DEPARTMENT OF COMMERCE
Under the Paperwork Reduction Act of 1995, no persons are required to respond to a collection of information unless it displays valid OMB control number.

PETITION TO ACCEPT UNINTENTIONALLY DELAYED PAYMENT OF MAINTENANCE FEE IN AN EXPIRED PATENT (37 CFR 1.378(c))

Patent Number	Issue Date (YYYY-MM-DD)	Application Number	Filing Date (YYYY-MM-DD)	Docket Number (if applicable)
6449749	2002-09-10	09442699	1999-11-18	D5116-00006

CAUTION: Maintenance fee (and surcharge, if any) payment must correctly identify: (1) the patent number and (2) the application number of the actual U.S. application leading to issuance of that patent to ensure the fee(s) is/are associated with the correct patent. 37 CFR 1.366(c) and (d).

SMALL ENTITY

☒ Patentee claims, or has previously claimed, small entity status. See 37 CFR 1.27.

LOSS OF ENTITLEMENT TO SMALL ENTITY STATUS

☐ Patentee is no longer entitled to small entity status. See 37 CFR 1.27(g)

NOT Small Entity	Fee	Code	Small Entity	Fee	Code
○	3 ½ year	(1551)	○	3 ½ year	(2551)
○	7 ½ year	(1552)	◉	7 ½ year	(2552)
○	11 ½ year	(1553)	○	11 ½ year	(2553)

SURCHARGE

The surcharge required by 37 CFR 1.20(i)(2) (Fee Code 1558) must be paid as a condition of accepting unintentionally delayed payment of the maintenance fee.

MAINTENANCE FEE (37 CFR 1.20(e)-(g))

The appropriate maintenance fee must be submitted with this petition.

STATEMENT

THE UNDERSIGNED CERTIFIES THAT THE DELAY IN PAYMENT OF THE MAINTENANCE FEE TO THIS PATENT WAS UNINTENTIONAL

PETITIONER(S) REQUEST THAT THE DELAYED PAYMENT OF THE MAINTENANCE FEE BE ACCEPTED AND THE PATENT REINSTATED

THIS PORTION MUST BE COMPLETED BY THE SIGNATORY OR SIGNATORIES

37 CFR 1.378(d) states: "Any petition under this section must be signed by an attorney or agent registered to practice before the Patent and Trademark Office, or by the patentee, the assignee, or other party in interest."

I certify, in accordance with 37 CFR 1.4(d)(4) that I am

◉ An attorney or agent registered to practice before the Patent and Trademark Office

○ A sole patentee

○ A joint patentee; I certify that I am authorized to sign this submission on behalf of all the other patentees.

○ A joint patentee; all of whom are signing this e-petition

○ The assignee of record of the entire interest

PTO/SB/66 (03-09)
Approved for use through 03/31/2012. OMB 0651-0016
U.S. Patent and Trademark Office: U.S. DEPARTMENT OF COMMERCE
Under the Paperwork Reduction Act of 1995, no persons are required to respond to a collection of information unless it displays valid OMB control number.

Patent Practitioner			
A signature of the applicant or representative is required in accordance with 37 CFR 1.33 and 10.18. Please see 37 CFR 1.4(d) for the form of the signature			
Signature	/David Garrod/	Date (YYYY-MM-DD)	2010-11-16
Name	David Garrod, Ph.D., Esq.	Registration Number	35149

This collection of information is required by 37 CFR 1.378(c). The information is required to obtain or retain a benefit by the public which is to file (and by the USPTO to process) an application. Confidentiality is governed by 35 U.S.C. 122 and 37 CFR 1.11 and 1.14. This collection is estimated to take 1 hour to complete, including gathering, preparing, and submitting the completed application form to the USPTO. Time will vary depending upon the individual case. Any comments on the amount of time you require to complete this form and/ or suggestions for reducing this burden, should be sent to the Chief Information Officer, U.S. Patent and Trademark Office, U.S. Department of Commerce, P.O. Box 1450, Alexandria, VA 22313-1450. DO NOT SEND FEES OR COMPLETED FORMS TO THIS ADDRESS. **This form can only be used when in conjunction with EFS-Web. If this form is mailed to the USPTO, it may cause delays in reinstating the patent.**

Privacy Act Statement

The Privacy Act of 1974 (P.L. 93-579) requires that you be given certain information in connection with your submission of the attached form related to a patent application or patent. Accordingly, pursuant to the requirements of the Act, please be advised that: (1) the general authority for the collection of this information is 35 U.S.C. 2(b)(2); (2) furnishing of the information solicited is voluntary; and (3) the principal purpose for which the information is used by the U.S. Patent and Trademark Office is to process and/or examine your submission related to a patent application or patent. If you do not furnish the requested information, the U.S. Patent and Trademark Office may not be able to process and/or examine your submission, which may result in termination of proceedings or abandonment of the application or expiration of the patent.

The information provided by you in this form will be subject to the following routine uses:

1. The information on this form will be treated confidentially to the extent allowed under the Freedom of Information Act (5 U.S.C. 552) and the Privacy Act (5 U.S.C. 552a). Records from this system of records may be disclosed to the Department of Justice to determine whether the Freedom of Information Act requires disclosure of these records.

2. A record from this system of records may be disclosed, as a routine use, in the course of presenting evidence to a court, magistrate, or administrative tribunal, including disclosures to opposing counsel in the course of settlement negotiations.

3. A record in this system of records may be disclosed, as a routine use, to a Member of Congress submitting a request involving an individual, to whom the record pertains, when the individual has requested assistance from the Member with respect to the subject matter of the record.

4. A record in this system of records may be disclosed, as a routine use, to a contractor of the Agency having need for the information in order to perform a contract. Recipients of information shall be required to comply with the requirements of the Privacy Act of 1974, as amended, pursuant to 5 U.S.C. 552a(m).

5. A record related to an International Application filed under the Patent Cooperation Treaty in this system of records may be disclosed, as a routine use, to the International Bureau of the World Intellectual Property Organization, pursuant to the Patent Cooperation Treaty.

6. A record in this system of records may be disclosed, as a routine use, to another federal agency for purposes of National Security review (35 U.S.C. 181) and for review pursuant to the Atomic Energy Act (42 U.S.C. 218(c)).

7. A record from this system of records may be disclosed, as a routine use, to the Administrator, General Services, or his/her designee, during an inspection of records conducted by GSA as part of that agency's responsibility to recommend improvements in records management practices and programs, under authority of 44 U.S.C. 2904 and 2906. Such disclosure shall be made in accordance with the GSA regulations governing inspection of records for this purpose, and any other relevant (i.e., GSA or Commerce) directive. Such disclosure shall not be used to make determinations about individuals.

8. A record from this system of records may be disclosed, as a routine use, to the public after either publication of the application pursuant to 35 U.S.C. 122(b) or issuance of a patent pursuant to 35 U.S.C. 151. Further, a record may be disclosed, subject to the limitations of 37 CFR 1.14, as a routine use, to the public if the record was filed in an application which became abandoned or in which the proceedings were terminated and which application is referenced by either a published application, an application open to public inspections or an issued patent.

9. A record from this system of records may be disclosed, as a routine use, to a Federal, State, or local law enforcement agency, if the USPTO becomes aware of a violation or potential violation of law or regulation.

UNITED STATES PATENT AND TRADEMARK OFFICE

Commissioner for Patents
United States Patent and Trademark Office
P.O. Box 1450
Alexandria, VA 22313-1450
www.uspto.gov

PHILIPS INTELLECTUAL PROPERTY & STANDARDS
P.O. BOX 3001
BRIARCLIFF MANOR NY 10510

MAILED

NOV 22 2010

OFFICE OF PETITIONS

In re Application of :
Holtslag et al. :
Application No. 09/442,959 : DECISION ON PETITION
Filed: November 18, 1999 :
Attorney Docket No. PHN14351USY :

This is a decision on the renewed petition under the unintentional provisions of 37 CFR 1.137(b), filed November 15, 2010, to revive the above-identified application.

The petition is **GRANTED**.

This application became abandoned for failure to timely pay the issue and publication fees and to submit corrected formal drawings on or before July 10, 2000, as required by the Notice of Allowance and Fee(s) Due and the Notice of Allowability, mailed April 10, 2000. Accordingly, the date of abandonment of this application is July 11, 2000. A Notice of Abandonment was mailed August 28, 2000.

The petition satisfies the requirements of 37 CFR 1.137(b) in that petitioner has supplied (1) the reply in the form of payment of the issue fee of $1,510.00, the publication fee of $300.00 (previously paid October 28, 2010), and corrected formal drawings, (2) the petition fee of $1,620.00 (previously paid October 28, 2010), and (3) a proper statement of unintentional delay.

Telephone inquiries concerning this decision should be directed to the undersigned at (571) 272-7751.

This application is being referred to Publishing Division for processing into a patent and review of the corrected drawings submitted on November 15, 2010.

Joan Olszewski
Petitions Examiner
Office of Petitions

UNITED STATES PATENT AND TRADEMARK OFFICE

Commissioner for Patents
United States Patent and Trademark Office
P.O. Box 1450
Alexandria, VA 22313-1450
www.uspto.gov

RICHARD GIUNTA
WOLF, GREENFIELD & SACKS, P.C.
600 ATLANTIC AVENUE
BOSTON, MASSACHUSETTS 02210-2206

MAILED

AUG 12 2011

OFFICE OF PETITIONS

In re Patent No. 6,594,630 :
Issued: July 15, 2003 :
Application No. 09/443,957 : ON PETITION
Filed: November 19, 1999 :
Attorney Docket No: N0484.71014US00 :

This is a decision regarding your request for acceptance of a fee deficiency submission and loss of small entity status filed August 1, 2011 under 37 CFR 1.28.

On September 1, 1998, the Court of Appeals for the Federal Circuit held that 37 CFR 1.28(c) is the sole provision governing the time for correction of the erroneous payment of the issue fee as a small entity. See DH Technology v. Synergystex International, Inc.. 154 F.33d 1333, 47 USPQ2d 1865 (Fed. Cir. Sept. 1, 1998).

The Office no longer investigates or rejects original or reissue applications under 37 CFR 1.56. 1098 Off. Gaz. Pat. Office 502 (January 3, 1989). Therefore nothing in this Notice is intended to imply that an investigation was done.

Your fee deficiency submission in the amount of $1305, under 37 CFR 1.28 is hereby accepted and the petition is **GRANTED**. Status as a small entity has also been removed.

Inquiries related to this communication should be directed to the Office of Petitions Staff at (571) 272-3282.

Patricia Faison-Ball
Senior Petitions Attorney
Office of Petitions

UNITED STATES PATENT AND TRADEMARK OFFICE

Commissioner for Patents
United States Patent and Trademark Office
P.O. Box 1450
Alexandria, VA 22313-1450
www.uspto.gov

MOETTELI & ASSOCIATES SARL
ST. LEONHARDSTRASSE 4
ST. GALLEN CH-90-00 CH SWITZERLAND

MAILED
APR 25 2011
OFFICE OF PETITIONS

In re Patent No. 6,573,929 :
Issued: June 3, 2003 :
Application No. 09/444,084 : ON PETITION
Filed: November 22, 1999 :
Attorney Docket No. NEST-007XX :

This is a notice regarding your request for acceptance of a fee deficiency submission under 37 CFR 1.28 filed March 11, 2011 and March 15, 2011.

On September 1, 1998, the Court of Appeals for the Federal Circuit held that 37 CFR 1.28(c) is the sole provision governing the time for correction of the erroneous payment of the issue fee as a small entity. **See DH Technology v. Synergystex International, Inc. 154 F.3d 1333, 47 USPQ2d 1865 (Fed. Cir. Sept. 1, 1998).**

The Office no longer investigates or rejects original or reissue applications under 37 CFR 1.56. **1098 Off. Gaz. Pat. Office 502 (January 3, 1989)**. Therefore, nothing in this Notice is intended to imply that an investigation was done.

Your fee deficiency submission under 37 CFR 1.28 is hereby **ACCEPTED**.

This patent is no longer entitled to small entity status. Accordingly, all future fees paid in this patent must be paid at the large entity rate.

Telephone inquires concerning this decision should be directed to the undersigned at (571) 272-7751.

/Joan Olszewski/
Joan Olszewski
Petitions Examiner
Office of Petitions

UNITED STATES PATENT AND TRADEMARK OFFICE

Commissioner for Patents
United States Patent and Trademark Office
P.O. Box 1450
Alexandria, VA 22313-1450
www.uspto.gov

MAILED

MAY 27 2011

OFFICE OF PETITIONS

MOETTELI & ASSOCIATES SARL
ST. LEONHARDSTRASSE 4
ST. GALLEN CH-90-00 CH **SWITZERLAND**

In re Patent No. 6,647,361 :
Issue Date: November 11, 2003 :
Application No. 09/444,156 : NOTICE
Filed: November 22, 1999 :
Patentee(s): Mark D. Laird, et. al. :

This is a Notice regarding your "NOTICE OF CHANGE OF ENTITY STATUS AND TRANSMITTAL OF PARTIAL MAINTENANCE FEE" filed on May 5, 2011, which is being treated as a request for acceptance of a fee deficiency submission under 37 CFR 1.28(c).

The Office no longer investigates or rejects original or reissue applications under 37 CFR 1.56. 1098 Off. Gaz. Pat. Office 502 (January 3, 1989). Therefore, nothing in this Notice is intended to imply that an investigation was done.

Your fee deficiency submission under 37 CFR 1.28 is hereby **ACCEPTED**. Therefore, status as a small entity has been removed and any future fee(s) submitted must be paid at the large entity rate.

Inquiries related to this communication should be directed to the undersigned at (571) 272-3226.

Andrea Smith
Petitions Examiner
Office of Petitions

PTO/SB/66 (03-09)
Approved for use through 03/31/2012. OMB 0651-0016
U.S. Patent and Trademark Office: U.S. DEPARTMENT OF COMMERCE
Under the Paperwork Reduction Act of 1995, no persons are required to respond to a collection of information unless it displays valid OMB control number.

PETITION TO ACCEPT UNINTENTIONALLY DELAYED PAYMENT OF MAINTENANCE FEE IN AN EXPIRED PATENT (37 CFR 1.378(c))

Patent Number	Issue Date (YYYY-MM-DD)	Application Number	Filing Date (YYYY-MM-DD)	Docket Number (if applicable)
6465655	2002-10-15	09444162	1999-11-22	SRX 105 DIV

CAUTION: Maintenance fee (and surcharge, if any) payment must correctly identify: (1) the patent number and (2) the application number of the actual U.S. application leading to issuance of that patent to ensure the fee(s) is/are associated with the correct patent. 37 CFR 1.366(c) and (d).

SMALL ENTITY

☒ Patentee claims, or has previously claimed, small entity status. See 37 CFR 1.27.

LOSS OF ENTITLEMENT TO SMALL ENTITY STATUS

☐ Patentee is no longer entitled to small entity status. See 37 CFR 1.27(g)

NOT Small Entity	Fee	Code	Small Entity	Fee	Code
○	3 ½ year	(1551)	○	3 ½ year	(2551)
○	7 ½ year	(1552)	◉	7 ½ year	(2552)
○	11 ½ year	(1553)	○	11 ½ year	(2553)

SURCHARGE

The surcharge required by 37 CFR 1.20(i)(2) (Fee Code 1558) must be paid as a condition of accepting unintentionally delayed payment of the maintenance fee.

MAINTENANCE FEE (37 CFR 1.20(e)-(g))

The appropriate maintenance fee must be submitted with this petition.

STATEMENT

THE UNDERSIGNED CERTIFIES THAT THE DELAY IN PAYMENT OF THE MAINTENANCE FEE TO THIS PATENT WAS UNINTENTIONAL

PETITIONER(S) REQUEST THAT THE DELAYED PAYMENT OF THE MAINTENANCE FEE BE ACCEPTED AND THE PATENT REINSTATED

THIS PORTION MUST BE COMPLETED BY THE SIGNATORY OR SIGNATORIES

37 CFR 1.378(d) states: "Any petition under this section must be signed by an attorney or agent registered to practice before the Patent and Trademark Office, or by the patentee, the assignee, or other party in interest."

I certify, in accordance with 37 CFR 1.4(d)(4) that I am

◉ An attorney or agent registered to practice before the Patent and Trademark Office

○ A sole patentee

○ A joint patentee; I certify that I am authorized to sign this submission on behalf of all the other patentees.

○ A joint patentee; all of whom are signing this e-petition

○ The assignee of record of the entire interest

PTO/SB/66 (03-09)
Approved for use through 03/31/2012. OMB 0651-0016
U.S. Patent and Trademark Office: U.S. DEPARTMENT OF COMMERCE
Under the Paperwork Reduction Act of 1995, no persons are required to respond to a collection of information unless it displays valid OMB control number.

Patent Practitioner			
A signature of the applicant or representative is required in accordance with 37 CFR 1.33 and 10.18. Please see 37 CFR 1.4(d) for the form of the signature			
Signature	/Rivka D. Monheit/	Date (YYYY-MM-DD)	2010-10-22
Name	Rivka D. Monheit	Registration Number	48731

This collection of information is required by 37 CFR 1.378(c). The information is required to obtain or retain a benefit by the public which is to file (and by the USPTO to process) an application. Confidentiality is governed by 35 U.S.C. 122 and 37 CFR 1.11 and 1.14. This collection is estimated to take 1 hour to complete, including gathering, preparing, and submitting the completed application form to the USPTO. Time will vary depending upon the individual case. Any comments on the amount of time you require to complete this form and/ or suggestions for reducing this burden, should be sent to the Chief Information Officer, U.S. Patent and Trademark Office, U.S. Department of Commerce, P.O. Box 1450, Alexandria, VA 22313-1450. DO NOT SEND FEES OR COMPLETED FORMS TO THIS ADDRESS. **This form can only be used when in conjunction with EFS-Web. If this form is mailed to the USPTO, it may cause delays in reinstating the patent.**

Privacy Act Statement

The Privacy Act of 1974 (P.L. 93-579) requires that you be given certain information in connection with your submission of the attached form related to a patent application or patent. Accordingly, pursuant to the requirements of the Act, please be advised that: (1) the general authority for the collection of this information is 35 U.S.C. 2(b)(2); (2) furnishing of the information solicited is voluntary; and (3) the principal purpose for which the information is used by the U.S. Patent and Trademark Office is to process and/or examine your submission related to a patent application or patent. If you do not furnish the requested information, the U.S. Patent and Trademark Office may not be able to process and/or examine your submission, which may result in termination of proceedings or abandonment of the application or expiration of the patent.

The information provided by you in this form will be subject to the following routine uses:

1. The information on this form will be treated confidentially to the extent allowed under the Freedom of Information Act (5 U.S.C. 552) and the Privacy Act (5 U.S.C. 552a). Records from this system of records may be disclosed to the Department of Justice to determine whether the Freedom of Information Act requires disclosure of these records.

2. A record from this system of records may be disclosed, as a routine use, in the course of presenting evidence to a court, magistrate, or administrative tribunal, including disclosures to opposing counsel in the course of settlement negotiations.

3. A record in this system of records may be disclosed, as a routine use, to a Member of Congress submitting a request involving an individual, to whom the record pertains, when the individual has requested assistance from the Member with respect to the subject matter of the record.

4. A record in this system of records may be disclosed, as a routine use, to a contractor of the Agency having need for the information in order to perform a contract. Recipients of information shall be required to comply with the requirements of the Privacy Act of 1974, as amended, pursuant to 5 U.S.C. 552a(m).

5. A record related to an International Application filed under the Patent Cooperation Treaty in this system of records may be disclosed, as a routine use, to the International Bureau of the World Intellectual Property Organization, pursuant to the Patent Cooperation Treaty.

6. A record in this system of records may be disclosed, as a routine use, to another federal agency for purposes of National Security review (35 U.S.C. 181) and for review pursuant to the Atomic Energy Act (42 U.S.C. 218(c)).

7. A record from this system of records may be disclosed, as a routine use, to the Administrator, General Services, or his/her designee, during an inspection of records conducted by GSA as part of that agency's responsibility to recommend improvements in records management practices and programs, under authority of 44 U.S.C. 2904 and 2906. Such disclosure shall be made in accordance with the GSA regulations governing inspection of records for this purpose, and any other relevant (i.e., GSA or Commerce) directive. Such disclosure shall not be used to make determinations about individuals.

8. A record from this system of records may be disclosed, as a routine use, to the public after either publication of the application pursuant to 35 U.S.C. 122(b) or issuance of a patent pursuant to 35 U.S.C. 151. Further, a record may be disclosed, subject to the limitations of 37 CFR 1.14, as a routine use, to the public if the record was filed in an application which became abandoned or in which the proceedings were terminated and which application is referenced by either a published application, an application open to public inspections or an issued patent.

9. A record from this system of records may be disclosed, as a routine use, to a Federal, State, or local law enforcement agency, if the USPTO becomes aware of a violation or potential violation of law or regulation.

UNITED STATES PATENT AND TRADEMARK OFFICE

Commissioner for Patents
United States Patent and Trademark Office
P.O. Box 1450
Alexandria, VA 22313-1450
www.uspto.gov

In re Patent No. 6465655
Issue Date: October 15,2002
Application No. 09444162
Filed: November 22,1999
Attorney Docket No. FSRX-105-DIV

:
:DECISION GRANTING PETITION
:UNDER 37 CFR 1.378(c)
:

This is a decision on the electronic petition, filed October 22,2010 ,under 37 CFR 1.378(c) to accept the unintentionally delayed payment of the 7.5 year maintenance fee for the above-identified patent.

The petition is **GRANTED**.

The maintenance fee is accepted, and the above-identified patent reinstated as of October 22,2010 . This decision also constitutes notice that the fee has been accepted. An electronic copy of the petition and this decision has been created as an entry in the Image File Wrapper. Nevertheless, petitioner should print and retain an independent copy.

Telephone inquiries related to this electronic decision should be directed to the Electronic Business Center at 1-866-217-9197.

UNITED STATES PATENT AND TRADEMARK OFFICE

Commissioner for Patents
United States Patent and Trademark Office
P.O. Box 1450
Alexandria, VA 22313-1450
www.uspto.gov

MAILED
SEP 27 2011
OFFICE OF PETITIONS

Marie Maier
1605 Enterprise Parkway
Twinsburg, OH 44087

In re Patent No. 6,604,324 :
Issue Date: August 12, 2003 : REQUEST FOR INFORMATION
Application No. 09/444,546 :
Filed: November 22, 1999 :
Atty. Dkt. No. 29967US1 :

This letter is in response to the petition under 37 CFR 1.378(b), filed September 13, 2011.

Prior to a decision on the merits of the petition under 37 CFR 1.378(b), additional information and/or supporting documentation is required.

Petitioner is given **TWO MONTHS** to comply. Extensions of time under 37 CFR 1.136(a) or (b) **will not** be permitted. The reply to this letter should be directed to the Office of Petitions.

Any petition under 37 CFR 1.378 must be signed by an attorney or agent registered to practice before the U.S. Patent and Trademark Office, or by the patentee, the assignee, or other party in interest. A person or organization whose only responsibility insofar as the patent is concerned is the payment of a maintenance fee is not a party in interest for purposes of 37 CFR 1.378. If the petition is signed by a person not registered to practice before the Office, the petition must indicate that the person signing the petition is the patentee, assignee, or other party in interest. An assignee must comply with the requirements of 37 CFR 3.73(b) which is discussed in MPEP § 324.

As petitioner herein does not appear to be an attorney or agent registered to practice before the USPTO, the patentee, or assignee, prior to a decision on the merits of the instant petition, petitioner must establish herself to be a proper party in interest.

Further, it is noted that the facsimile cover sheet accompanying the instant petition indicates that the petition itself is six pages. Petitioner is advised that the USPTO received a total of five pages, including the facsimile cover sheet. Thus, is further documentation was intended to accompany the instant petition, petitioner may wish to submit such additional documentation in conjunction with petitioners' response to the instant letter.

Further correspondence with respect to this matter should be addressed as follows:

By mail:
Mail Stop PETITIONS
Commissioner for Patents
Post Office Box 1450
Alexandria, VA 22313-1450

By hand:
Customer Service Window
Mail Stop Petitions
Randolph Building
401 Dulany Street
Alexandria, VA 22314

By fax:
(571) 273-8300
ATTN: Office of Petitions

Any questions concerning this matter may be directed to the undersigned at (571) 272-3205.

/ALESIA M. BROWN/

Alesia M. Brown
Attorney Advisor
Office of Petitions

UNITED STATES PATENT AND TRADEMARK OFFICE

Commissioner for Patents
United States Patent and Trademark Office
P.O. Box 1450
Alexandria, VA 22313-1450
www.uspto.gov

BARBARA GORANSSON
11113 SW SPRINGTREE TERRACE
PORT SAINT LUCIE, FL 34987

MAILED

DEC 12 2011

OFFICE OF PETITIONS

In re Patent No. 6,604,324
Issue Date: August 12, 2003
Application No. 09/444,546
Filed: November 22, 1999
Atty. Dkt. No. 29967US1

DECISION ON PETITION

This is a decision on the petition under 37 CFR 1.378(b), filed November 6, 2011, to accept an unavoidably delayed payment of a maintenance fee for the above-identified patent.

The petition is **DISMISSED**.

If reconsideration of this decision is desired, a petition for reconsideration under 37 CFR 1.378(e) must be filed within TWO (2) MONTHS from the mail date of this decision. No extension of this 2-month time limit can be granted under 37 CFR 1.136(a) or (b). **Any such petition for reconsideration must be accompanied by the petition fee of $400 as set forth in 37 CFR 1.17(f).** The petition for reconsideration should include an exhaustive attempt to provide the lacking item(s) noted below, since, after a decision on the petition for reconsideration, no further reconsideration or review of the matter will be undertaken by the Director.

The patent issued August 12, 2003. The 7.5 year maintenance fee could have been paid from August 12, 2010 through February 12, 2011, or with a surcharge during the period from February 13, 2011 through August 12, 2011. Accordingly, the patent expired August 12, 2011, for failure to timely submit the maintenance fee.

A petition to accept the delayed payment of a maintenance fee under 35 U.S.C. § 41(c) and 37 CFR 1.378(b) must be accompanied by (1) an adequate showing that the delay was unavoidable, since reasonable care was taken to ensure that the maintenance fee would be paid timely and that the petition was filed promptly after the patentee was notified of, or otherwise became aware of, the expiration of the patent, (2) payment of the appropriate maintenance fee, unless previously submitted, and (3) payment of the surcharge set forth in 37 CFR 1.20(i)(1).

This petition lacks item requirement (1) set forth above.

The Director may accept late payment of the maintenance fee if the delay is shown to the satisfaction of the Director to have been "unavoidable". 35 U.S.C. § 41(c)(1).

Patentee appears to attribute the failure to timely pay the second maintenance fee to financial hardship wherein patentee states:

> "Due to the present market conditions in which we sell our products, we have been faced with unavoidable cash flow which prevented us from paying this maintenance on time."

The showing of record is inadequate to establish unavoidable delay within the meaning of 37 CFR 1.378(b)(3).

The Director may accept late payment of the maintenance fee if the delay is shown to the satisfaction of the Director to have been "unavoidable". See, 35 U.S.C. § 41(c)(1). Acceptance of late payment of a maintenance fee is considered under the same standard as that for reviving an abandoned application under 35 U.S.C. § 133 because 35 U.S.C. § 41(c)(1) uses the identical language, i.e. "unavoidable delay". Ray v. Lehman, 55 F.3d 606, 608-09, 34 USPQ2d 1786, 1787 (Fed. Cir. 1995)(quoting In re Patent No. 4,409,763, 7 USPQ2d 1798, 1800 (Comm'r Pat. 1988)). Decisions on reviving abandoned applications have adopted the "reasonably prudent person" standard in determining if the delay in responding to an Office action was unavoidable. Ex parte Pratt, 1887 Dec. Comm'r Pat. 31, 32-33 (Comm'r Pat. 1887)(the term "unavoidable" "is applicable to ordinary human affairs, and requires no more or greater care or diligence than is generally used and observed by prudent and careful men in relation to their most important business"); In re Mattullath, 38 App. D.C. 497, 514-515 (D.C. Cir. 1912); and Ex parte Henrich, 1913 Dec. Comm'r Pat. 139, 141. In addition, decisions on revival are made on a "case-by-case basis, taking all the facts and circumstances into account." Smith v. Mossinghoff, 671 F.2d 533, 538, 213 USPQ 977, 982 (D.C. Cir. 1982). Finally, a petition to revive an application as unavoidably abandoned cannot be granted where a petitioner has failed to meet his or her burden of establishing the cause of the unavoidable delay. Haines v. Quigg, 673 F. Supp. 314, 316-17, 5 USPQ2d 1130, 1131-32 (N.D. Ind. 1987).

As 35 U.S.C. § 41(b) requires the payment of the fees at specified intervals to maintain a patent in force, rather than some response to a specific action by the Office under 35 U.S.C. § 133, a reasonably prudent person in the exercise of due care and diligence would have taken steps to ensure the timely payment of such maintenance fees. Ray v. Lehman, 55 F.3d at 609, 34 USPQ2d at 1788. That is, an adequate showing that the delay in payment of the maintenance fee at issue was "unavoidable" within the meaning of 35 U.S.C. § 41(c) and 37 C.F.R. § 1.378(b)(3) requires a showing of the steps taken by the responsible party. Id.

Petitioner must establish that petitioner was aware of the need to pay the maintenance fee, and to that end was tracking it, or had engaged someone to track it before the expiration, but when the fee came due, petitioner was "unavoidably" prevented from making the maintenance fee payment due to financial hardship. Petitioner has failed to satisfy this burden of proof.

Petitioner has failed to establish the existence of financial hardship. Petitioner has provided no documentary evidence of the alleged financial hardship. Further, petition has failed to indicate when such financial hardship commenced and/or ended. Moreover, petitioner has failed to establish a nexus between any alleged financial hardship and the failure to timely remit the maintenance fee payment.

In view of the lack of documentary evidence or detailed declaration of facts, it cannot be found that the entire period of time, from the time that the maintenance fee was due until the filing of a grantable petition, was unavoidable. Accordingly, the petition to reinstate the patent must be dismissed.

Petitioners may request a refund of the previously submitted surcharge and maintenance fee. Petitioners may request a refund by writing to the Finance Office, Refund Section. A copy of this decision should accompany any request for refund.

Any renewed petition must establish that the entire period of delay from the time that the maintenance fee was due until the time of the filing of a grantable petition has been unavoidable. Petitioner is reminded that any renewed petition should entail an exhaustive effort to establish that the failure to timely pay the maintenance fee was unavoidable as after reconsideration pursuant to 37 CFR 1.378(e), no further reconsideration regarding unavoidable delay will be undertaken. Petitioner may provide any and all documents and declaration so fact that he wishes the Office to consider prior to making a decision on the request for reinstatement of the patent

ALTERNATE VENUE

Petitioner may wish to consider submitting a petition stating that the failure to timely remit the maintenance fee was unintentional pursuant to 37 CFR 1.378(c). Any petition to accept an unintentionally delayed payment of a maintenance fee filed under paragraph (a) of this section must be filed within twenty-four months after the six-month grace period provided in § 1.362(e) and must include: (1)The required maintenance fee set forth in § 1.20 (e) through (g); (2) The surcharge set forth in § 1.20(i)(2); and (3) A statement that the delay in payment of the maintenance fee was unintentional.

Enclosed please find as a courtesy a copy of PTO/SB/66. Petitioner is advised that the surcharge required under 37 CFR 1.378(c)(2) is currently $1,640.00 and **is not** subject to waiver. The small entity 7.5 year maintenance fee is currently $1,425.00. The effective date of fee increase is September 26, 2011. If desired, the previously submitted fee totaling $2,880.00 can be used in connection with a petition filed pursuant to 37 CFR 1.378(c). However, any request for reconsideration would require the submission of the remaining fee due.

The file does not indicate a change of address has been submitted, although the address given on the petition differs from the address of record. If appropriate, a change of address should be filed in accordance with MPEP 601.03. A courtesy copy of this decision is being mailed to the address given on the petition; however, the Office will mail all future correspondence solely to the address of record. Enclosed please find PTO/SB/123 which may be used to effect a proper change in correspondence address before the Office.

Telephone inquiries concerning this matter may be directed to the undersigned at 571-272-3205.

/ALESIA M. BROWN/

Alesia M. Brown
Attorney Advisor
Office of Petitions

Enclosures

UNITED STATES PATENT AND TRADEMARK OFFICE

Commissioner for Patents
United States Patent and Trademark Office
P.O. Box 1450
Alexandria, VA 22313-1450
www.uspto.gov

Robert Maier
1605 Enterprise Parkway
Twinsburg, OH 44087

MAILED

MAR 19 2012

OFFICE OF PETITIONS

In re Patent No. 6,604,324 :
Issue Date: August 12, 2003 :
Application No. 09/444,546 : DECISION ON PETITION
Filed: November 22, 1999 :
Atty. Dkt. No. 29967US1 :

This is a decision on the petition under 37 CFR 1.378(b), filed December 29, 2011, to accept an unavoidably delayed payment of a maintenance fee for the above-identified patent.

As it appears that the decision mailed December 12, 2011 may not have been received by patentee, said decision is hereby withdrawn. Patentee is encouraged to utilize the change of correspondence address form enclosed herewith.

The petition is **DISMISSED**.

If reconsideration of this decision is desired, a petition for reconsideration under 37 CFR 1.378(e) must be filed within TWO (2) MONTHS from the mail date of this decision. No extension of this 2-month time limit can be granted under 37 CFR 1.136(a) or (b). **Any such petition for reconsideration must be accompanied by the petition fee of $400 as set forth in 37 CFR 1.17(f).** The petition for reconsideration should include an exhaustive attempt to provide the lacking item(s) noted below, since, after a decision on the petition for reconsideration, no further reconsideration or review of the matter will be undertaken by the Director.

The patent issued August 12, 2003. The 7.5 year maintenance fee could have been paid from August 12, 2010 through February 12, 2011, or with a surcharge during the period from February 13, 2011 through August 12, 2011. Accordingly, the patent expired August 12, 2011, for failure to timely submit the maintenance fee.

A petition to accept the delayed payment of a maintenance fee under 35 U.S.C. § 41(c) and 37 CFR 1.378(b) must be accompanied by (1) an adequate showing that the delay was unavoidable, since reasonable care was taken to ensure that the maintenance fee would be paid timely and that the petition was filed promptly after the patentee was notified of, or otherwise became aware of, the expiration of the patent, (2) payment of the appropriate maintenance fee, unless previously submitted, and (3) payment of the surcharge set forth in 37 CFR 1.20(i)(1).

This petition lacks item requirement (1) set forth above.

The Director may accept late payment of the maintenance fee if the delay is shown to the satisfaction of the Director to have been "unavoidable". 35 U.S.C. § 41(c)(1).

Patentee appears to attribute the failure to timely pay the second maintenance fee to financial hardship wherein patentee states:

> "Due to the present market conditions in which we sell our products, we have been faced with unavoidable cash flow which prevented us from paying this maintenance on time."

The showing of record is inadequate to establish unavoidable delay within the meaning of 37 CFR 1.378(b)(3).

The Director may accept late payment of the maintenance fee if the delay is shown to the satisfaction of the Director to have been "unavoidable". See, 35 U.S.C. § 41(c)(1). Acceptance of late payment of a maintenance fee is considered under the same standard as that for reviving an abandoned application under 35 U.S.C. § 133 because 35 U.S.C. § 41(c)(1) uses the identical language, i.e. "unavoidable delay". Ray v. Lehman, 55 F.3d 606, 608-09, 34 USPQ2d 1786, 1787 (Fed. Cir. 1995)(quoting In re Patent No. 4,409,763, 7 USPQ2d 1798, 1800 (Comm'r Pat. 1988)). Decisions on reviving abandoned applications have adopted the "reasonably prudent person" standard in determining if the delay in responding to an Office action was unavoidable. Ex parte Pratt, 1887 Dec. Comm'r Pat. 31, 32-33 (Comm'r Pat. 1887)(the term "unavoidable" "is applicable to ordinary human affairs, and requires no more or greater care or diligence than is generally used and observed by prudent and careful men in relation to their most important business"); In re Mattullath, 38 App. D.C. 497, 514-515 (D.C. Cir. 1912); and Ex parte Henrich, 1913 Dec. Comm'r Pat. 139, 141. In addition, decisions on revival are made on a "case-by-case basis, taking all the facts and circumstances into account." Smith v. Mossinghoff, 671 F.2d 533, 538, 213 USPQ 977, 982 (D.C. Cir. 1982). Finally, a petition to revive an application as unavoidably abandoned cannot be granted where a petitioner has failed to meet his or her burden of establishing the cause of the unavoidable delay. Haines v. Quigg, 673 F. Supp. 314, 316-17, 5 USPQ2d 1130, 1131-32 (N.D. Ind. 1987).

As 35 U.S.C. § 41(b) requires the payment of the fees at specified intervals to maintain a patent in force, rather than some response to a specific action by the Office under 35 U.S.C. § 133, a reasonably prudent person in the exercise of due care and diligence would have taken steps to ensure the timely payment of such maintenance fees. Ray v. Lehman, 55 F.3d at 609, 34 USPQ2d at 1788. That is, an adequate showing that the delay in payment of the maintenance fee at issue was "unavoidable" within the meaning of 35 U.S.C. § 41(c) and 37 C.F.R. § 1.378(b)(3) requires a showing of the steps taken by the responsible party. Id.

Petitioner must establish that petitioner was aware of the need to pay the maintenance fee, and to that end was tracking it, or had engaged someone to track it before the expiration, but when the fee came due, petitioner was "unavoidably" prevented from making the maintenance fee payment due to financial hardship. Petitioner has failed to satisfy this burden of proof.

Petitioner has failed to establish the existence of financial hardship. Petitioner has provided no documentary evidence of the alleged financial hardship. Further, petition has failed to indicate when such financial hardship commenced and/or ended. Moreover, petitioner has failed to establish a nexus between any alleged financial hardship and the failure to timely remit the maintenance fee payment.

In view of the lack of documentary evidence or detailed declaration of facts, it cannot be found that the entire period of time, from the time that the maintenance fee was due until the filing of a grantable petition, was unavoidable. Accordingly, the petition to reinstate the patent must be dismissed.

Petitioners may request a refund of the previously submitted surcharge and maintenance fee. Petitioners may request a refund by writing to the Finance Office, Refund Section. A copy of this decision should accompany any request for refund.

Any renewed petition must establish that the entire period of delay from the time that the maintenance fee was due until the time of the filing of a grantable petition has been unavoidable. Petitioner is reminded that any renewed petition should entail an exhaustive effort to establish that the failure to timely pay the maintenance fee was unavoidable as after reconsideration pursuant to 37 CFR 1.378(e), no further reconsideration regarding unavoidable delay will be undertaken. Petitioner may provide any and all documents and declaration so fact that he wishes the Office to consider prior to making a decision on the request for reinstatement of the patent

ALTERNATE VENUE

Petitioner may wish to consider submitting a petition stating that the failure to timely remit the maintenance fee was unintentional pursuant to 37 CFR 1.378(c). Any petition to accept an unintentionally delayed payment of a maintenance fee filed under paragraph (a) of this section must be filed within twenty-four months after the six-month grace period provided in § 1.362(e) and must include: (1)The required maintenance fee set forth in § 1.20 (e) through (g); (2) The surcharge set forth in § 1.20(i)(2); and (3) A statement that the delay in payment of the maintenance fee was unintentional.

Enclosed please find as a courtesy a copy of PTO/SB/66. Petitioner is advised that the surcharge required under 37 CFR 1.378(c)(2) is currently $1,640.00 and **is not** subject to waiver. The small entity 7.5 year maintenance fee is currently $1,425.00. If desired, the previously submitted fee totaling $2,880.00 can be used in connection with a petition filed pursuant to 37 CFR 1.378(c). However, any request for reconsideration would require the submission of the remaining fee due.

The file does not indicate a change of address has been submitted, although the address given on the petition differs from the address of record. If appropriate, a change of address should be filed in accordance with MPEP 601.03. A courtesy copy of this decision is being mailed to the address given on the petition; however, the Office will mail all future correspondence solely to the address of record. Enclosed please find PTO/SB/123 which may be used to effect a proper change in correspondence address before the Office.

Telephone inquiries concerning this matter may be directed to the undersigned at 571-272-3205.

/ALESIA M. BROWN/

Alesia M. Brown
Attorney Advisor
Office of Petitions

Enclosures

UNITED STATES PATENT AND TRADEMARK OFFICE

Commissioner for Patents
United States Patent and Trademark Office
P.O. Box 1450
Alexandria, VA 22313-1450
www.uspto.gov

EDWARD J PETRUS
3413 SPANISH OAK DR
AUSTIN TX 78731

MAILED

OCT 2 0 2010

OFFICE OF PETITIONS

In re Patent of Petrus	:	
Patent No. 7,136,820	:	
Issue Date: November 14, 2006	:	DECISION ON REQUEST
Application No. 09/444,660	:	FOR RECONSIDERATION OF
Filed: November 22, 1999	:	PATENT TERM ADJUSTMENT
Atty. Docket No. N/A	:	

This is a decision on the petition filed on August 9, 2010, requesting that the patent term adjustment indicated on the above-identified patent be corrected to indicate that the term of the above-identified patent is extended or adjusted by either one thousand one hundred seventy-seven (1177) days or one thousand four hundred fifty-three (1453) days. The petition was timely filed within one month of the mailing of a Decision on Request for Recalculation of Patent Term Adjustment in View of Wyeth, mailed July 21, 2010.

The petition is **DISMISSED.**

Patentee is given **one (1) month or thirty (30) days**, whichever is longer, to respond to this decision. No extensions of time will be granted under § 1.136(a).

Patentee's June 22, 2010 request for recalculation was deemed ineligible, as noted in the Decision on Request for Recalculation of Patent Term Adjustment in View of Wyeth, mailed July 21, 2010. Patentee was informed that patentee could file a reply to the decision within one month or thirty days, whichever was longer, of the mail date of the decision dismissing the request for recalculation. No fee was required if patentee was asserting in the reply that the dismissal for ineligibility was improper.

The present petition does **not** assert that the July 21, 2010 dismissal for ineligibility was improper. Instead, patentee has provided a detailed explanation as to the bases for increasing the patent term adjustment. Since patentee's petition does not

contain an argument against the dismissal based on ineligibility, the petition fee under 37 CFR 1.18(e) of $200.00 is required.

Telephone inquiries specific to this decision should be directed to the undersigned at (571) 272-3230.

Shirene Willis Brantley
Senior Petitions Attorney
Office of Petitions

UNITED STATES PATENT AND TRADEMARK OFFICE

Commissioner for Patents
United States Patent and Trademark Office
P.O. Box 1450
Alexandria, VA 22313-1450
www.uspto.gov

In re Patent No. 7136820
Issue Date: November 14,2006
Application No. 09444660
Filed: November 22,1999
Attorney Docket No.

:
:DECISION GRANTING PETITION
:UNDER 37 CFR 1.378(c)
:

This is a decision on the electronic petition, filed December 6,2010 ,under 37 CFR 1.378(c) to accept the unintentionally delayed payment of the 3.5 year maintenance fee for the above-identified patent.

The petition is **GRANTED**.

The maintenance fee is accepted, and the above-identified patent reinstated as of December 6,2010 . This decision also constitutes notice that the fee has been accepted. An electronic copy of the petition and this decision has been created as an entry in the Image File Wrapper. Nevertheless, petitioner should print and retain an independent copy.

Telephone inquiries related to this electronic decision should be directed to the Electronic Business Center at 1-866-217-9197.

PTO/SB/66 (03-09)
Approved for use through 03/31/2012. OMB 0651-0016
U.S. Patent and Trademark Office: U.S. DEPARTMENT OF COMMERCE
Under the Paperwork Reduction Act of 1995, no persons are required to respond to a collection of information unless it displays valid OMB control number.

PETITION TO ACCEPT UNINTENTIONALLY DELAYED PAYMENT OF MAINTENANCE FEE IN AN EXPIRED PATENT (37 CFR 1.378(c))

Patent Number	Issue Date (YYYY-MM-DD)	Application Number	Filing Date (YYYY-MM-DD)	Docket Number (if applicable)
7136820	2006-11-14	09444660	1999-11-22	

CAUTION: Maintenance fee (and surcharge, if any) payment must correctly identify: (1) the patent number and (2) the application number of the actual U.S. application leading to issuance of that patent to ensure the fee(s) is/are associated with the correct patent. 37 CFR 1.366(c) and (d).

SMALL ENTITY

☒ Patentee claims, or has previously claimed, small entity status. See 37 CFR 1.27.

LOSS OF ENTITLEMENT TO SMALL ENTITY STATUS

☐ Patentee is no longer entitled to small entity status. See 37 CFR 1.27(g)

NOT Small Entity			Small Entity		
	Fee	Code		Fee	Code
○	3 ½ year	(1551)	◉	3 ½ year	(2551)
○	7 ½ year	(1552)	○	7 ½ year	(2552)
○	11 ½ year	(1553)	○	11 ½ year	(2553)

SURCHARGE

The surcharge required by 37 CFR 1.20(i)(2) (Fee Code 1558) must be paid as a condition of accepting unintentionally delayed payment of the maintenance fee.

MAINTENANCE FEE (37 CFR 1.20(e)-(g))

The appropriate maintenance fee must be submitted with this petition.

STATEMENT

THE UNDERSIGNED CERTIFIES THAT THE DELAY IN PAYMENT OF THE MAINTENANCE FEE TO THIS PATENT WAS UNINTENTIONAL

PETITIONER(S) REQUEST THAT THE DELAYED PAYMENT OF THE MAINTENANCE FEE BE ACCEPTED AND THE PATENT REINSTATED

THIS PORTION MUST BE COMPLETED BY THE SIGNATORY OR SIGNATORIES

37 CFR 1.378(d) states: "Any petition under this section must be signed by an attorney or agent registered to practice before the Patent and Trademark Office, or by the patentee, the assignee, or other party in interest."

I certify, in accordance with 37 CFR 1.4(d)(4) that I am

○ An attorney or agent registered to practice before the Patent and Trademark Office

◉ A sole patentee

○ A joint patentee; I certify that I am authorized to sign this submission on behalf of all the other patentees.

○ A joint patentee; all of whom are signing this e-petition

○ The assignee of record of the entire interest

PTO/SB/66 (03-09)
Approved for use through 03/31/2012. OMB 0651-0016
U.S. Patent and Trademark Office: U.S. DEPARTMENT OF COMMERCE
Under the Paperwork Reduction Act of 1995, no persons are required to respond to a collection of information unless it displays valid OMB control number.

Sole Patentee			
A signature of the applicant or representative is required in accordance with 37 CFR 1.33 and 10.18. Please see 37 CFR 1.4(d) for the form of the signature.			
Signature	/Edward J Petrus/	Date (YYYY-MM-DD)	2010-12-06
Name	Edward J Petrus		

This collection of information is required by 37 CFR 1.378(c). The information is required to obtain or retain a benefit by the public which is to file (and by the USPTO to process) an application. Confidentiality is governed by 35 U.S.C. 122 and 37 CFR 1.11 and 1.14. This collection is estimated to take 1 hour to complete, including gathering, preparing, and submitting the completed application form to the USPTO. Time will vary depending upon the individual case. Any comments on the amount of time you require to complete this form and/ or suggestions for reducing this burden, should be sent to the Chief Information Officer, U.S. Patent and Trademark Office, U.S. Department of Commerce, P.O. Box 1450, Alexandria, VA 22313-1450. DO NOT SEND FEES OR COMPLETED FORMS TO THIS ADDRESS. **This form can only be used when in conjunction with EFS-Web. If this form is mailed to the USPTO, it may cause delays in reinstating the patent.**

Privacy Act Statement

The Privacy Act of 1974 (P.L. 93-579) requires that you be given certain information in connection with your submission of the attached form related to a patent application or patent. Accordingly, pursuant to the requirements of the Act, please be advised that: (1) the general authority for the collection of this information is 35 U.S.C. 2(b)(2); (2) furnishing of the information solicited is voluntary; and (3) the principal purpose for which the information is used by the U.S. Patent and Trademark Office is to process and/or examine your submission related to a patent application or patent. If you do not furnish the requested information, the U.S. Patent and Trademark Office may not be able to process and/or examine your submission, which may result in termination of proceedings or abandonment of the application or expiration of the patent.

The information provided by you in this form will be subject to the following routine uses:

1. The information on this form will be treated confidentially to the extent allowed under the Freedom of Information Act (5 U.S.C. 552) and the Privacy Act (5 U.S.C. 552a). Records from this system of records may be disclosed to the Department of Justice to determine whether the Freedom of Information Act requires disclosure of these records.

2. A record from this system of records may be disclosed, as a routine use, in the course of presenting evidence to a court, magistrate, or administrative tribunal, including disclosures to opposing counsel in the course of settlement negotiations.

3. A record in this system of records may be disclosed, as a routine use, to a Member of Congress submitting a request involving an individual, to whom the record pertains, when the individual has requested assistance from the Member with respect to the subject matter of the record.

4. A record in this system of records may be disclosed, as a routine use, to a contractor of the Agency having need for the information in order to perform a contract. Recipients of information shall be required to comply with the requirements of the Privacy Act of 1974, as amended, pursuant to 5 U.S.C. 552a(m).

5. A record related to an International Application filed under the Patent Cooperation Treaty in this system of records may be disclosed, as a routine use, to the International Bureau of the World Intellectual Property Organization, pursuant to the Patent Cooperation Treaty.

6. A record in this system of records may be disclosed, as a routine use, to another federal agency for purposes of National Security review (35 U.S.C. 181) and for review pursuant to the Atomic Energy Act (42 U.S.C. 218(c)).

7. A record from this system of records may be disclosed, as a routine use, to the Administrator, General Services, or his/her designee, during an inspection of records conducted by GSA as part of that agency's responsibility to recommend improvements in records management practices and programs, under authority of 44 U.S.C. 2904 and 2906. Such disclosure shall be made in accordance with the GSA regulations governing inspection of records for this purpose, and any other relevant (i.e., GSA or Commerce) directive. Such disclosure shall not be used to make determinations about individuals.

8. A record from this system of records may be disclosed, as a routine use, to the public after either publication of the application pursuant to 35 U.S.C. 122(b) or issuance of a patent pursuant to 35 U.S.C. 151. Further, a record may be disclosed, subject to the limitations of 37 CFR 1.14, as a routine use, to the public if the record was filed in an application which became abandoned or in which the proceedings were terminated and which application is referenced by either a published application, an application open to public inspections or an issued patent.

9. A record from this system of records may be disclosed, as a routine use, to a Federal, State, or local law enforcement agency, if the USPTO becomes aware of a violation or potential violation of law or regulation.

UNITED STATES PATENT AND TRADEMARK OFFICE

Commissioner for Patents
United States Patent and Trademark Office
P.O. Box 1450
Alexandria, VA 22313-1450
www.uspto.gov

In re Patent No. 6338466
Issue Date: January 15,2002
Application No. 09445606
Filed: June 2,2000
Attorney Docket No. VOVEI-1-US

:
:DECISION GRANTING PETITION
:UNDER 37 CFR 1.378(c)
:

This is a decision on the electronic petition, filed October 27,2010 ,under 37 CFR 1.378(c) to accept the unintentionally delayed payment of the 7.5 year maintenance fee for the above-identified patent.

The petition is **GRANTED**.

The maintenance fee is accepted, and the above-identified patent reinstated as of October 27,2010 . This decision also constitutes notice that the fee has been accepted. An electronic copy of the petition and this decision has been created as an entry in the Image File Wrapper. Nevertheless, petitioner should print and retain an independent copy.

Telephone inquiries related to this electronic decision should be directed to the Electronic Business Center at 1-866-217-9197.

PTO/SB/66 (03-09)
Approved for use through 03/31/2012. OMB 0651-0016
U.S. Patent and Trademark Office: U.S. DEPARTMENT OF COMMERCE
Under the Paperwork Reduction Act of 1995, no persons are required to respond to a collection of information unless it displays valid OMB control number.

PETITION TO ACCEPT UNINTENTIONALLY DELAYED PAYMENT OF MAINTENANCE FEE IN AN EXPIRED PATENT (37 CFR 1.378(c))

Patent Number	Issue Date (YYYY-MM-DD)	Application Number	Filing Date (YYYY-MM-DD)	Docket Number (if applicable)
6,338,466	2002-01-15	09/445,606	2000-06-02	VOVEI-0001-P02

CAUTION: Maintenance fee (and surcharge, if any) payment must correctly identify: (1) the patent number and (2) the application number of the actual U.S. application leading to issuance of that patent to ensure the fee(s) is/are associated with the correct patent. 37 CFR 1.366(c) and (d).

SMALL ENTITY

☒ Patentee claims, or has previously claimed, small entity status. See 37 CFR 1.27.

LOSS OF ENTITLEMENT TO SMALL ENTITY STATUS

☐ Patentee is no longer entitled to small entity status. See 37 CFR 1.27(g)

NOT Small Entity			Small Entity		
	Fee	Code		Fee	Code
○	3 ½ year	(1551)	○	3 ½ year	(2551)
○	7 ½ year	(1552)	◉	7 ½ year	(2552)
○	11 ½ year	(1553)	○	11 ½ year	(2553)

SURCHARGE

The surcharge required by 37 CFR 1.20(i)(2) (Fee Code 1558) must be paid as a condition of accepting unintentionally delayed payment of the maintenance fee.

MAINTENANCE FEE (37 CFR 1.20(e)-(g))

The appropriate maintenance fee must be submitted with this petition.

STATEMENT

THE UNDERSIGNED CERTIFIES THAT THE DELAY IN PAYMENT OF THE MAINTENANCE FEE TO THIS PATENT WAS UNINTENTIONAL

PETITIONER(S) REQUEST THAT THE DELAYED PAYMENT OF THE MAINTENANCE FEE BE ACCEPTED AND THE PATENT REINSTATED

THIS PORTION MUST BE COMPLETED BY THE SIGNATORY OR SIGNATORIES

37 CFR 1.378(d) states: "Any petition under this section must be signed by an attorney or agent registered to practice before the Patent and Trademark Office, or by the patentee, the assignee, or other party in interest."

I certify, in accordance with 37 CFR 1.4(d)(4) that I am

◉ An attorney or agent registered to practice before the Patent and Trademark Office

○ A sole patentee

○ A joint patentee; I certify that I am authorized to sign this submission on behalf of all the other patentees.

○ A joint patentee; all of whom are signing this e-petition

○ The assignee of record of the entire interest

PTO/SB/66 (03-09)
Approved for use through 03/31/2012. OMB 0651-0016
U.S. Patent and Trademark Office: U.S. DEPARTMENT OF COMMERCE
Under the Paperwork Reduction Act of 1995, no persons are required to respond to a collection of information unless it displays valid OMB control number.

Patent Practitioner			
A signature of the applicant or representative is required in accordance with 37 CFR 1.33 and 10.18. Please see 37 CFR 1.4(d) for the form of the signature			
Signature	/Jennifer J. Branigan/	Date (YYYY-MM-DD)	2010-10-27
Name	Jennifer J. Branigan	Registration Number	40921

This collection of information is required by 37 CFR 1.378(c). The information is required to obtain or retain a benefit by the public which is to file (and by the USPTO to process) an application. Confidentiality is governed by 35 U.S.C. 122 and 37 CFR 1.11 and 1.14. This collection is estimated to take 1 hour to complete, including gathering, preparing, and submitting the completed application form to the USPTO. Time will vary depending upon the individual case. Any comments on the amount of time you require to complete this form and/ or suggestions for reducing this burden, should be sent to the Chief Information Officer, U.S. Patent and Trademark Office, U.S. Department of Commerce, P.O. Box 1450, Alexandria, VA 22313-1450. DO NOT SEND FEES OR COMPLETED FORMS TO THIS ADDRESS. **This form can only be used when in conjunction with EFS-Web. If this form is mailed to the USPTO, it may cause delays in reinstating the patent.**

Privacy Act Statement

The Privacy Act of 1974 (P.L. 93-579) requires that you be given certain information in connection with your submission of the attached form related to a patent application or patent. Accordingly, pursuant to the requirements of the Act, please be advised that: (1) the general authority for the collection of this information is 35 U.S.C. 2(b)(2); (2) furnishing of the information solicited is voluntary; and (3) the principal purpose for which the information is used by the U.S. Patent and Trademark Office is to process and/or examine your submission related to a patent application or patent. If you do not furnish the requested information, the U.S. Patent and Trademark Office may not be able to process and/or examine your submission, which may result in termination of proceedings or abandonment of the application or expiration of the patent.

The information provided by you in this form will be subject to the following routine uses:

1. The information on this form will be treated confidentially to the extent allowed under the Freedom of Information Act (5 U.S.C. 552) and the Privacy Act (5 U.S.C. 552a). Records from this system of records may be disclosed to the Department of Justice to determine whether the Freedom of Information Act requires disclosure of these records.

2. A record from this system of records may be disclosed, as a routine use, in the course of presenting evidence to a court, magistrate, or administrative tribunal, including disclosures to opposing counsel in the course of settlement negotiations.

3. A record in this system of records may be disclosed, as a routine use, to a Member of Congress submitting a request involving an individual, to whom the record pertains, when the individual has requested assistance from the Member with respect to the subject matter of the record.

4. A record in this system of records may be disclosed, as a routine use, to a contractor of the Agency having need for the information in order to perform a contract. Recipients of information shall be required to comply with the requirements of the Privacy Act of 1974, as amended, pursuant to 5 U.S.C. 552a(m).

5. A record related to an International Application filed under the Patent Cooperation Treaty in this system of records may be disclosed, as a routine use, to the International Bureau of the World Intellectual Property Organization, pursuant to the Patent Cooperation Treaty.

6. A record in this system of records may be disclosed, as a routine use, to another federal agency for purposes of National Security review (35 U.S.C. 181) and for review pursuant to the Atomic Energy Act (42 U.S.C. 218(c)).

7. A record from this system of records may be disclosed, as a routine use, to the Administrator, General Services, or his/her designee, during an inspection of records conducted by GSA as part of that agency's responsibility to recommend improvements in records management practices and programs, under authority of 44 U.S.C. 2904 and 2906. Such disclosure shall be made in accordance with the GSA regulations governing inspection of records for this purpose, and any other relevant (i.e., GSA or Commerce) directive. Such disclosure shall not be used to make determinations about individuals.

8. A record from this system of records may be disclosed, as a routine use, to the public after either publication of the application pursuant to 35 U.S.C. 122(b) or issuance of a patent pursuant to 35 U.S.C. 151. Further, a record may be disclosed, subject to the limitations of 37 CFR 1.14, as a routine use, to the public if the record was filed in an application which became abandoned or in which the proceedings were terminated and which application is referenced by either a published application, an application open to public inspections or an issued patent.

9. A record from this system of records may be disclosed, as a routine use, to a Federal, State, or local law enforcement agency, if the USPTO becomes aware of a violation or potential violation of law or regulation.

PTO/SB/66 (03-09)
Approved for use through 03/31/2012. OMB 0651-0016
U.S. Patent and Trademark Office: U.S. DEPARTMENT OF COMMERCE
Under the Paperwork Reduction Act of 1995, no persons are required to respond to a collection of information unless it displays valid OMB control number.

PETITION TO ACCEPT UNINTENTIONALLY DELAYED PAYMENT OF MAINTENANCE FEE IN AN EXPIRED PATENT (37 CFR 1.378(c))

Patent Number	Issue Date (YYYY-MM-DD)	Application Number	Filing Date (YYYY-MM-DD)	Docket Number (if applicable)
6282762	2001-09-04	09445871	1999-12-13	300627-00035

CAUTION: Maintenance fee (and surcharge, if any) payment must correctly identify: (1) the patent number and (2) the application number of the actual U.S. application leading to issuance of that patent to ensure the fee(s) is/are associated with the correct patent. 37 CFR 1.366(c) and (d).

SMALL ENTITY

☒ Patentee claims, or has previously claimed, small entity status. See 37 CFR 1.27.

LOSS OF ENTITLEMENT TO SMALL ENTITY STATUS

☐ Patentee is no longer entitled to small entity status. See 37 CFR 1.27(g)

NOT Small Entity	Fee	Code	Small Entity	Fee	Code
◯	3 ½ year	(1551)	◯	3 ½ year	(2551)
◯	7 ½ year	(1552)	◉	7 ½ year	(2552)
◯	11 ½ year	(1553)	◯	11 ½ year	(2553)

SURCHARGE

The surcharge required by 37 CFR 1.20(i)(2) (Fee Code 1558) must be paid as a condition of accepting unintentionally delayed payment of the maintenance fee.

MAINTENANCE FEE (37 CFR 1.20(e)-(g))

The appropriate maintenance fee must be submitted with this petition.

STATEMENT

THE UNDERSIGNED CERTIFIES THAT THE DELAY IN PAYMENT OF THE MAINTENANCE FEE TO THIS PATENT WAS UNINTENTIONAL

PETITIONER(S) REQUEST THAT THE DELAYED PAYMENT OF THE MAINTENANCE FEE BE ACCEPTED AND THE PATENT REINSTATED

THIS PORTION MUST BE COMPLETED BY THE SIGNATORY OR SIGNATORIES

37 CFR 1.378(d) states: "Any petition under this section must be signed by an attorney or agent registered to practice before the Patent and Trademark Office, or by the patentee, the assignee, or other party in interest."

I certify, in accordance with 37 CFR 1.4(d)(4) that I am

◉ An attorney or agent registered to practice before the Patent and Trademark Office

◯ A sole patentee

◯ A joint patentee; I certify that I am authorized to sign this submission on behalf of all the other patentees.

◯ A joint patentee; all of whom are signing this e-petition

◯ The assignee of record of the entire interest

PTO/SB/66 (03-09)
Approved for use through 03/31/2012. OMB 0651-0016
U.S. Patent and Trademark Office: U.S. DEPARTMENT OF COMMERCE
Under the Paperwork Reduction Act of 1995, no persons are required to respond to a collection of information unless it displays valid OMB control number.

Patent Practitioner			
A signature of the applicant or representative is required in accordance with 37 CFR 1.33 and 10.18. Please see 37 CFR 1.4(d) for the form of the signature			
Signature	/Karl F. Milde, Jr./	Date (YYYY-MM-DD)	2010-12-28
Name	Karl F. Milde, Jr.	Registration Number	24822

This collection of information is required by 37 CFR 1.378(c). The information is required to obtain or retain a benefit by the public which is to file (and by the USPTO to process) an application. Confidentiality is governed by 35 U.S.C. 122 and 37 CFR 1.11 and 1.14. This collection is estimated to take 1 hour to complete, including gathering, preparing, and submitting the completed application form to the USPTO. Time will vary depending upon the individual case. Any comments on the amount of time you require to complete this form and/ or suggestions for reducing this burden, should be sent to the Chief Information Officer, U.S. Patent and Trademark Office, U.S. Department of Commerce, P.O. Box 1450, Alexandria, VA 22313-1450. DO NOT SEND FEES OR COMPLETED FORMS TO THIS ADDRESS. **This form can only be used when in conjunction with EFS-Web. If this form is mailed to the USPTO, it may cause delays in reinstating the patent.**

Privacy Act Statement

The Privacy Act of 1974 (P.L. 93-579) requires that you be given certain information in connection with your submission of the attached form related to a patent application or patent. Accordingly, pursuant to the requirements of the Act, please be advised that: (1) the general authority for the collection of this information is 35 U.S.C. 2(b)(2); (2) furnishing of the information solicited is voluntary; and (3) the principal purpose for which the information is used by the U.S. Patent and Trademark Office is to process and/or examine your submission related to a patent application or patent. If you do not furnish the requested information, the U.S. Patent and Trademark Office may not be able to process and/or examine your submission, which may result in termination of proceedings or abandonment of the application or expiration of the patent.

The information provided by you in this form will be subject to the following routine uses:

1. The information on this form will be treated confidentially to the extent allowed under the Freedom of Information Act (5 U.S.C. 552) and the Privacy Act (5 U.S.C. 552a). Records from this system of records may be disclosed to the Department of Justice to determine whether the Freedom of Information Act requires disclosure of these records.

2. A record from this system of records may be disclosed, as a routine use, in the course of presenting evidence to a court, magistrate, or administrative tribunal, including disclosures to opposing counsel in the course of settlement negotiations.

3. A record in this system of records may be disclosed, as a routine use, to a Member of Congress submitting a request involving an individual, to whom the record pertains, when the individual has requested assistance from the Member with respect to the subject matter of the record.

4. A record in this system of records may be disclosed, as a routine use, to a contractor of the Agency having need for the information in order to perform a contract. Recipients of information shall be required to comply with the requirements of the Privacy Act of 1974, as amended, pursuant to 5 U.S.C. 552a(m).

5. A record related to an International Application filed under the Patent Cooperation Treaty in this system of records may be disclosed, as a routine use, to the International Bureau of the World Intellectual Property Organization, pursuant to the Patent Cooperation Treaty.

6. A record in this system of records may be disclosed, as a routine use, to another federal agency for purposes of National Security review (35 U.S.C. 181) and for review pursuant to the Atomic Energy Act (42 U.S.C. 218(c)).

7. A record from this system of records may be disclosed, as a routine use, to the Administrator, General Services, or his/her designee, during an inspection of records conducted by GSA as part of that agency's responsibility to recommend improvements in records management practices and programs, under authority of 44 U.S.C. 2904 and 2906. Such disclosure shall be made in accordance with the GSA regulations governing inspection of records for this purpose, and any other relevant (i.e., GSA or Commerce) directive. Such disclosure shall not be used to make determinations about individuals.

8. A record from this system of records may be disclosed, as a routine use, to the public after either publication of the application pursuant to 35 U.S.C. 122(b) or issuance of a patent pursuant to 35 U.S.C. 151. Further, a record may be disclosed, subject to the limitations of 37 CFR 1.14, as a routine use, to the public if the record was filed in an application which became abandoned or in which the proceedings were terminated and which application is referenced by either a published application, an application open to public inspections or an issued patent.

9. A record from this system of records may be disclosed, as a routine use, to a Federal, State, or local law enforcement agency, if the USPTO becomes aware of a violation or potential violation of law or regulation.

UNITED STATES PATENT AND TRADEMARK OFFICE

Commissioner for Patents
United States Patent and Trademark Office
P.O. Box 1450
Alexandria, VA 22313-1450
www.uspto.gov

In re Patent No. 6282762
Issue Date: September 4,2001
Application No. 09445871
Filed: December 13,1999
Attorney Docket No. HBC-219-KFM

:
:DECISION GRANTING PETITION
:UNDER 37 CFR 1.378(c)
:

This is a decision on the electronic petition, filed December 28,2010 ,under 37 CFR 1.378(c) to accept the unintentionally delayed payment of the 7.5 year maintenance fee for the above-identified patent.

The petition is **GRANTED**.

The maintenance fee is accepted, and the above-identified patent reinstated as of December 28,2010 . This decision also constitutes notice that the fee has been accepted. An electronic copy of the petition and this decision has been created as an entry in the Image File Wrapper. Nevertheless, petitioner should print and retain an independent copy.

Telephone inquiries related to this electronic decision should be directed to the Electronic Business Center at 1-866-217-9197.

UNITED STATES PATENT AND TRADEMARK OFFICE

Commissioner for Patents
United States Patent and Trademark Office
P.O. Box 1450
Alexandria, VA 22313-1450
www.uspto.gov

In re Patent No. 6282627
Issue Date: August 28,2001
Application No. 09446762
Filed: May 25,2000
Attorney Docket No. 032001-042

:
:DECISION GRANTING PETITION
:UNDER 37 CFR 1.378(c)
:

This is a decision on the electronic petition, filed October 4,2010 ,under 37 CFR 1.378(c) to accept the unintentionally delayed payment of the 7.5 year maintenance fee for the above-identified patent.

The petition is **GRANTED**.

The maintenance fee is accepted, and the above-identified patent reinstated as of October 4,2010 .
This decision also constitutes notice that the fee has been accepted. An electronic copy of the petition and this decision has been created as an entry in the Image File Wrapper. Nevertheless, petitioner should print and retain an independent copy.

Telephone inquiries related to this electronic decision should be directed to the Electronic Business Center at 1-866-217-9197.

PTO/SB/66 (03-09)
Approved for use through 03/31/2012. OMB 0651-0016
U.S. Patent and Trademark Office: U.S. DEPARTMENT OF COMMERCE
Under the Paperwork Reduction Act of 1995, no persons are required to respond to a collection of information unless it displays valid OMB control number.

PETITION TO ACCEPT UNINTENTIONALLY DELAYED PAYMENT OF MAINTENANCE FEE IN AN EXPIRED PATENT (37 CFR 1.378(c))

Patent Number	Issue Date (YYYY-MM-DD)	Application Number	Filing Date (YYYY-MM-DD)	Docket Number (if applicable)
6282627	2001-08-28	09446762	2000-05-25	032001-042

CAUTION: Maintenance fee (and surcharge, if any) payment must correctly identify: (1) the patent number and (2) the application number of the actual U.S. application leading to issuance of that patent to ensure the fee(s) is/are associated with the correct patent. 37 CFR 1.366(c) and (d).

SMALL ENTITY

☐ Patentee claims, or has previously claimed, small entity status. See 37 CFR 1.27.

LOSS OF ENTITLEMENT TO SMALL ENTITY STATUS

☐ Patentee is no longer entitled to small entity status. See 37 CFR 1.27(g)

NOT Small Entity			Small Entity		
	Fee	Code		Fee	Code
○	3 ½ year	(1551)	○	3 ½ year	(2551)
◉	7 ½ year	(1552)	○	7 ½ year	(2552)
○	11 ½ year	(1553)	○	11 ½ year	(2553)

SURCHARGE

The surcharge required by 37 CFR 1.20(i)(2) (Fee Code 1558) must be paid as a condition of accepting unintentionally delayed payment of the maintenance fee.

MAINTENANCE FEE (37 CFR 1.20(e)-(g))

The appropriate maintenance fee must be submitted with this petition.

STATEMENT

THE UNDERSIGNED CERTIFIES THAT THE DELAY IN PAYMENT OF THE MAINTENANCE FEE TO THIS PATENT WAS UNINTENTIONAL

PETITIONER(S) REQUEST THAT THE DELAYED PAYMENT OF THE MAINTENANCE FEE BE ACCEPTED AND THE PATENT REINSTATED

THIS PORTION MUST BE COMPLETED BY THE SIGNATORY OR SIGNATORIES

37 CFR 1.378(d) states: "Any petition under this section must be signed by an attorney or agent registered to practice before the Patent and Trademark Office, or by the patentee, the assignee, or other party in interest."

I certify, in accordance with 37 CFR 1.4(d)(4) that I am

◉ An attorney or agent registered to practice before the Patent and Trademark Office

○ A sole patentee

○ A joint patentee; I certify that I am authorized to sign this submission on behalf of all the other patentees.

○ A joint patentee; all of whom are signing this e-petition

○ The assignee of record of the entire interest

PTO/SB/66 (03-09)
Approved for use through 03/31/2012. OMB 0651-0016
U.S. Patent and Trademark Office: U.S. DEPARTMENT OF COMMERCE
Under the Paperwork Reduction Act of 1995, no persons are required to respond to a collection of information unless it displays valid OMB control number.

Patent Practitioner			
A signature of the applicant or representative is required in accordance with 37 CFR 1.33 and 10.18. Please see 37 CFR 1.4(d) for the form of the signature			
Signature	/Kendal M. Sheets/	Date (YYYY-MM-DD)	2010-10-01
Name	Kendal M. Sheets	Registration Number	47077

This collection of information is required by 37 CFR 1.378(c). The information is required to obtain or retain a benefit by the public which is to file (and by the USPTO to process) an application. Confidentiality is governed by 35 U.S.C. 122 and 37 CFR 1.11 and 1.14. This collection is estimated to take 1 hour to complete, including gathering, preparing, and submitting the completed application form to the USPTO. Time will vary depending upon the individual case. Any comments on the amount of time you require to complete this form and/ or suggestions for reducing this burden, should be sent to the Chief Information Officer, U.S. Patent and Trademark Office, U.S. Department of Commerce, P.O. Box 1450, Alexandria, VA 22313-1450. DO NOT SEND FEES OR COMPLETED FORMS TO THIS ADDRESS. **This form can only be used when in conjunction with EFS-Web. If this form is mailed to the USPTO, it may cause delays in reinstating the patent.**

Privacy Act Statement

The Privacy Act of 1974 (P.L. 93-579) requires that you be given certain information in connection with your submission of the attached form related to a patent application or patent. Accordingly, pursuant to the requirements of the Act, please be advised that: (1) the general authority for the collection of this information is 35 U.S.C. 2(b)(2); (2) furnishing of the information solicited is voluntary; and (3) the principal purpose for which the information is used by the U.S. Patent and Trademark Office is to process and/or examine your submission related to a patent application or patent. If you do not furnish the requested information, the U.S. Patent and Trademark Office may not be able to process and/or examine your submission, which may result in termination of proceedings or abandonment of the application or expiration of the patent.

The information provided by you in this form will be subject to the following routine uses:

1. The information on this form will be treated confidentially to the extent allowed under the Freedom of Information Act (5 U.S.C. 552) and the Privacy Act (5 U.S.C. 552a). Records from this system of records may be disclosed to the Department of Justice to determine whether the Freedom of Information Act requires disclosure of these records.

2. A record from this system of records may be disclosed, as a routine use, in the course of presenting evidence to a court, magistrate, or administrative tribunal, including disclosures to opposing counsel in the course of settlement negotiations.

3. A record in this system of records may be disclosed, as a routine use, to a Member of Congress submitting a request involving an individual, to whom the record pertains, when the individual has requested assistance from the Member with respect to the subject matter of the record.

4. A record in this system of records may be disclosed, as a routine use, to a contractor of the Agency having need for the information in order to perform a contract. Recipients of information shall be required to comply with the requirements of the Privacy Act of 1974, as amended, pursuant to 5 U.S.C. 552a(m).

5. A record related to an International Application filed under the Patent Cooperation Treaty in this system of records may be disclosed, as a routine use, to the International Bureau of the World Intellectual Property Organization, pursuant to the Patent Cooperation Treaty.

6. A record in this system of records may be disclosed, as a routine use, to another federal agency for purposes of National Security review (35 U.S.C. 181) and for review pursuant to the Atomic Energy Act (42 U.S.C. 218(c)).

7. A record from this system of records may be disclosed, as a routine use, to the Administrator, General Services, or his/her designee, during an inspection of records conducted by GSA as part of that agency's responsibility to recommend improvements in records management practices and programs, under authority of 44 U.S.C. 2904 and 2906. Such disclosure shall be made in accordance with the GSA regulations governing inspection of records for this purpose, and any other relevant (i.e., GSA or Commerce) directive. Such disclosure shall not be used to make determinations about individuals.

8. A record from this system of records may be disclosed, as a routine use, to the public after either publication of the application pursuant to 35 U.S.C. 122(b) or issuance of a patent pursuant to 35 U.S.C. 151. Further, a record may be disclosed, subject to the limitations of 37 CFR 1.14, as a routine use, to the public if the record was filed in an application which became abandoned or in which the proceedings were terminated and which application is referenced by either a published application, an application open to public inspections or an issued patent.

9. A record from this system of records may be disclosed, as a routine use, to a Federal, State, or local law enforcement agency, if the USPTO becomes aware of a violation or potential violation of law or regulation.

UNITED STATES PATENT AND TRADEMARK OFFICE

Commissioner for Patents
United States Patent and Trademark Office
P.O. Box 1450
Alexandria, VA 22313-1450
www.uspto.gov

In re Patent No. 6395014
Issue Date: May 28,2002
Application No. 09447458
Filed: November 22,1999
Attorney Docket No. CARDE.52986

: DECISION GRANTING PETITION
: UNDER 37 CFR 1.378(c)

This is a decision on the electronic petition, filed March 8,2012 ,under 37 CFR 1.378(c) to accept the unintentionally delayed payment of the 7.5 year maintenance fee for the above-identified patent.

The petition is **GRANTED**.

The maintenance fee is accepted, and the above-identified patent reinstated as of March 8,2012 . This decision also constitutes notice that the fee has been accepted. An electronic copy of the petition and this decision has been created as an entry in the Image File Wrapper. Nevertheless, petitioner should print and retain an independent copy.

Telephone inquiries related to this electronic decision should be directed to the Electronic Business Center at 1-866-217-9197.

PTO/SB/66 (03-09)
Approved for use through 03/31/2012. OMB 0651-0016
U.S. Patent and Trademark Office: U.S. DEPARTMENT OF COMMERCE
Under the Paperwork Reduction Act of 1995, no persons are required to respond to a collection of information unless it displays valid OMB control number.

PETITION TO ACCEPT UNINTENTIONALLY DELAYED PAYMENT OF MAINTENANCE FEE IN AN EXPIRED PATENT (37 CFR 1.378(c))

Patent Number	Issue Date (YYYY-MM-DD)	Application Number	Filing Date (YYYY-MM-DD)	Docket Number (if applicable)
6395014	2002-05-28	09447458	1999-11-22	71723-5001

CAUTION: Maintenance fee (and surcharge, if any) payment must correctly identify: (1) the patent number and (2) the application number of the actual U.S. application leading to issuance of that patent to ensure the fee(s) is/are associated with the correct patent. 37 CFR 1.366(c) and (d).

SMALL ENTITY

☒ Patentee claims, or has previously claimed, small entity status. See 37 CFR 1.27.

LOSS OF ENTITLEMENT TO SMALL ENTITY STATUS

☐ Patentee is no longer entitled to small entity status. See 37 CFR 1.27(g)

NOT Small Entity	Fee	Code	Small Entity	Fee	Code
○	3 ½ year	(1551)	○	3 ½ year	(2551)
○	7 ½ year	(1552)	◉	7 ½ year	(2552)
○	11 ½ year	(1553)	○	11 ½ year	(2553)

SURCHARGE

The surcharge required by 37 CFR 1.20(i)(2) (Fee Code 1558) must be paid as a condition of accepting unintentionally delayed payment of the maintenance fee.

MAINTENANCE FEE (37 CFR 1.20(e)-(g))

The appropriate maintenance fee must be submitted with this petition.

STATEMENT

THE UNDERSIGNED CERTIFIES THAT THE DELAY IN PAYMENT OF THE MAINTENANCE FEE TO THIS PATENT WAS UNINTENTIONAL

PETITIONER(S) REQUEST THAT THE DELAYED PAYMENT OF THE MAINTENANCE FEE BE ACCEPTED AND THE PATENT REINSTATED

THIS PORTION MUST BE COMPLETED BY THE SIGNATORY OR SIGNATORIES

37 CFR 1.378(d) states: "Any petition under this section must be signed by an attorney or agent registered to practice before the Patent and Trademark Office, or by the patentee, the assignee, or other party in interest."

I certify, in accordance with 37 CFR 1.4(d)(4) that I am

○ An attorney or agent registered to practice before the Patent and Trademark Office

○ A sole patentee

○ A joint patentee; I certify that I am authorized to sign this submission on behalf of all the other patentees.

○ A joint patentee; all of whom are signing this e-petition

◉ The assignee of record of the entire interest

PTO/SB/66 (03-09)
Approved for use through 03/31/2012. OMB 0651-0016
U.S. Patent and Trademark Office: U.S. DEPARTMENT OF COMMERCE
Under the Paperwork Reduction Act of 1995, no persons are required to respond to a collection of information unless it displays valid OMB control number.

The Assignee of record of the entire interest			
Under 37 CFR 3.71 an assignee becomes of record by filing a statement in compliance with 37 CFR 3.73(b). Signature requirements are set forth in 37 CFR 1.4(d), and the undersigned certifies that he / she is empowered to act on behalf of the assignee of the entire interest			
Signature	/Wilfred J. Samson/	Date (YYYY-MM-DD)	2012-03-01
Name	Wilfred J. Samson		
Enter Reel and Frame Number		Remove	
Reel Number	013718	Frame Number	0555
Enter Reel and Frame Number		Remove	
Reel Number	027119	Frame Number	0089
Click ADD for additional Reel Number and Frame Number		Add	

This collection of information is required by 37 CFR 1.378(c). The information is required to obtain or retain a benefit by the public which is to file (and by the USPTO to process) an application. Confidentiality is governed by 35 U.S.C. 122 and 37 CFR 1.11 and 1.14. This collection is estimated to take 1 hour to complete, including gathering, preparing, and submitting the completed application form to the USPTO. Time will vary depending upon the individual case. Any comments on the amount of time you require to complete this form and/ or suggestions for reducing this burden, should be sent to the Chief Information Officer, U.S. Patent and Trademark Office, U.S. Department of Commerce, P.O. Box 1450, Alexandria, VA 22313-1450. DO NOT SEND FEES OR COMPLETED FORMS TO THIS ADDRESS. **This form can only be used when in conjunction with EFS-Web. If this form is mailed to the USPTO, it may cause delays in reinstating the patent.**

Privacy Act Statement

The Privacy Act of 1974 (P.L. 93-579) requires that you be given certain information in connection with your submission of the attached form related to a patent application or patent. Accordingly, pursuant to the requirements of the Act, please be advised that: (1) the general authority for the collection of this information is 35 U.S.C. 2(b)(2); (2) furnishing of the information solicited is voluntary; and (3) the principal purpose for which the information is used by the U.S. Patent and Trademark Office is to process and/or examine your submission related to a patent application or patent. If you do not furnish the requested information, the U.S. Patent and Trademark Office may not be able to process and/or examine your submission, which may result in termination of proceedings or abandonment of the application or expiration of the patent.

The information provided by you in this form will be subject to the following routine uses:

1. The information on this form will be treated confidentially to the extent allowed under the Freedom of Information Act (5 U.S.C. 552) and the Privacy Act (5 U.S.C. 552a). Records from this system of records may be disclosed to the Department of Justice to determine whether the Freedom of Information Act requires disclosure of these records.

2. A record from this system of records may be disclosed, as a routine use, in the course of presenting evidence to a court, magistrate, or administrative tribunal, including disclosures to opposing counsel in the course of settlement negotiations.

3. A record in this system of records may be disclosed, as a routine use, to a Member of Congress submitting a request involving an individual, to whom the record pertains, when the individual has requested assistance from the Member with respect to the subject matter of the record.

4. A record in this system of records may be disclosed, as a routine use, to a contractor of the Agency having need for the information in order to perform a contract. Recipients of information shall be required to comply with the requirements of the Privacy Act of 1974, as amended, pursuant to 5 U.S.C. 552a(m).

5. A record related to an International Application filed under the Patent Cooperation Treaty in this system of records may be disclosed, as a routine use, to the International Bureau of the World Intellectual Property Organization, pursuant to the Patent Cooperation Treaty.

6. A record in this system of records may be disclosed, as a routine use, to another federal agency for purposes of National Security review (35 U.S.C. 181) and for review pursuant to the Atomic Energy Act (42 U.S.C. 218(c)).

7. A record from this system of records may be disclosed, as a routine use, to the Administrator, General Services, or his/her designee, during an inspection of records conducted by GSA as part of that agency's responsibility to recommend improvements in records management practices and programs, under authority of 44 U.S.C. 2904 and 2906. Such disclosure shall be made in accordance with the GSA regulations governing inspection of records for this purpose, and any other relevant (i.e., GSA or Commerce) directive. Such disclosure shall not be used to make determinations about individuals.

8. A record from this system of records may be disclosed, as a routine use, to the public after either publication of the application pursuant to 35 U.S.C. 122(b) or issuance of a patent pursuant to 35 U.S.C. 151. Further, a record may be disclosed, subject to the limitations of 37 CFR 1.14, as a routine use, to the public if the record was filed in an application which became abandoned or in which the proceedings were terminated and which application is referenced by either a published application, an application open to public inspections or an issued patent.

9. A record from this system of records may be disclosed, as a routine use, to a Federal, State, or local law enforcement agency, if the USPTO becomes aware of a violation or potential violation of law or regulation.

UNITED STATES PATENT AND TRADEMARK OFFICE

Commissioner for Patents
United States Patent and Trademark Office
P.O. Box 1450
Alexandria, VA 22313-1450
www.uspto.gov

In re Patent No. 6308632
Issue Date: October 30,2001
Application No. 09447972
Filed: November 22,1999
Attorney Docket No. 624993.00002

:
:DECISION GRANTING PETITION
:UNDER 37 CFR 1.378(c)
:

This is a decision on the electronic petition, filed June 14,2011 ,under 37 CFR 1.378(c) to accept the unintentionally delayed payment of the 7.5 year maintenance fee for the above-identified patent.

The petition is **GRANTED**.

The maintenance fee is accepted, and the above-identified patent reinstated as of June 14,2011 .
This decision also constitutes notice that the fee has been accepted. An electronic copy of the petition and this decision has been created as an entry in the Image File Wrapper. Nevertheless, petitioner should print and retain an independent copy.

Telephone inquiries related to this electronic decision should be directed to the Electronic Business Center at 1-866-217-9197.

PTO/SB/66 (03-09)
Approved for use through 03/31/2012. OMB 0651-0016
U.S. Patent and Trademark Office: U.S. DEPARTMENT OF COMMERCE
Under the Paperwork Reduction Act of 1995, no persons are required to respond to a collection of information unless it displays valid OMB control number.

PETITION TO ACCEPT UNINTENTIONALLY DELAYED PAYMENT OF MAINTENANCE FEE IN AN EXPIRED PATENT (37 CFR 1.378(c))

Patent Number	Issue Date (YYYY-MM-DD)	Application Number	Filing Date (YYYY-MM-DD)	Docket Number (if applicable)
6308632	2001-10-30	09447972	1999-11-22	624993.00002

CAUTION: Maintenance fee (and surcharge, if any) payment must correctly identify: (1) the patent number and (2) the application number of the actual U.S. application leading to issuance of that patent to ensure the fee(s) is/are associated with the correct patent. 37 CFR 1.366(c) and (d).

SMALL ENTITY

☒ Patentee claims, or has previously claimed, small entity status. See 37 CFR 1.27.

LOSS OF ENTITLEMENT TO SMALL ENTITY STATUS

☐ Patentee is no longer entitled to small entity status. See 37 CFR 1.27(g)

NOT Small Entity			Small Entity		
	Fee	Code		Fee	Code
○	3 ½ year	(1551)	○	3 ½ year	(2551)
○	7 ½ year	(1552)	◉	7 ½ year	(2552)
○	11 ½ year	(1553)	○	11 ½ year	(2553)

SURCHARGE

The surcharge required by 37 CFR 1.20(i)(2) (Fee Code 1558) must be paid as a condition of accepting unintentionally delayed payment of the maintenance fee.

MAINTENANCE FEE (37 CFR 1.20(e)-(g))

The appropriate maintenance fee must be submitted with this petition.

STATEMENT

THE UNDERSIGNED CERTIFIES THAT THE DELAY IN PAYMENT OF THE MAINTENANCE FEE TO THIS PATENT WAS UNINTENTIONAL

PETITIONER(S) REQUEST THAT THE DELAYED PAYMENT OF THE MAINTENANCE FEE BE ACCEPTED AND THE PATENT REINSTATED

THIS PORTION MUST BE COMPLETED BY THE SIGNATORY OR SIGNATORIES

37 CFR 1.378(d) states: "Any petition under this section must be signed by an attorney or agent registered to practice before the Patent and Trademark Office, or by the patentee, the assignee, or other party in interest."

I certify, in accordance with 37 CFR 1.4(d)(4) that I am

◉ An attorney or agent registered to practice before the Patent and Trademark Office

○ A sole patentee

○ A joint patentee; I certify that I am authorized to sign this submission on behalf of all the other patentees.

○ A joint patentee; all of whom are signing this e-petition

○ The assignee of record of the entire interest

PTO/SB/66 (03-09)
Approved for use through 03/31/2012. OMB 0651-0016
U.S. Patent and Trademark Office: U.S. DEPARTMENT OF COMMERCE
Under the Paperwork Reduction Act of 1995, no persons are required to respond to a collection of information unless it displays valid OMB control number.

Patent Practitioner			
A signature of the applicant or representative is required in accordance with 37 CFR 1.33 and 10.18. Please see 37 CFR 1.4(d) for the form of the signature			
Signature	/David G. Maire/	Date (YYYY-MM-DD)	2011-06-14
Name	David G. Maire	Registration Number	34865

This collection of information is required by 37 CFR 1.378(c). The information is required to obtain or retain a benefit by the public which is to file (and by the USPTO to process) an application. Confidentiality is governed by 35 U.S.C. 122 and 37 CFR 1.11 and 1.14. This collection is estimated to take 1 hour to complete, including gathering, preparing, and submitting the completed application form to the USPTO. Time will vary depending upon the individual case. Any comments on the amount of time you require to complete this form and/ or suggestions for reducing this burden, should be sent to the Chief Information Officer, U.S. Patent and Trademark Office, U.S. Department of Commerce, P.O. Box 1450, Alexandria, VA 22313-1450. DO NOT SEND FEES OR COMPLETED FORMS TO THIS ADDRESS. **This form can only be used when in conjunction with EFS-Web. If this form is mailed to the USPTO, it may cause delays in reinstating the patent.**

Privacy Act Statement

The Privacy Act of 1974 (P.L. 93-579) requires that you be given certain information in connection with your submission of the attached form related to a patent application or patent. Accordingly, pursuant to the requirements of the Act, please be advised that: (1) the general authority for the collection of this information is 35 U.S.C. 2(b)(2); (2) furnishing of the information solicited is voluntary; and (3) the principal purpose for which the information is used by the U.S. Patent and Trademark Office is to process and/or examine your submission related to a patent application or patent. If you do not furnish the requested information, the U.S. Patent and Trademark Office may not be able to process and/or examine your submission, which may result in termination of proceedings or abandonment of the application or expiration of the patent.

The information provided by you in this form will be subject to the following routine uses:

1. The information on this form will be treated confidentially to the extent allowed under the Freedom of Information Act (5 U.S.C. 552) and the Privacy Act (5 U.S.C. 552a). Records from this system of records may be disclosed to the Department of Justice to determine whether the Freedom of Information Act requires disclosure of these records.

2. A record from this system of records may be disclosed, as a routine use, in the course of presenting evidence to a court, magistrate, or administrative tribunal, including disclosures to opposing counsel in the course of settlement negotiations.

3. A record in this system of records may be disclosed, as a routine use, to a Member of Congress submitting a request involving an individual, to whom the record pertains, when the individual has requested assistance from the Member with respect to the subject matter of the record.

4. A record in this system of records may be disclosed, as a routine use, to a contractor of the Agency having need for the information in order to perform a contract. Recipients of information shall be required to comply with the requirements of the Privacy Act of 1974, as amended, pursuant to 5 U.S.C. 552a(m).

5. A record related to an International Application filed under the Patent Cooperation Treaty in this system of records may be disclosed, as a routine use, to the International Bureau of the World Intellectual Property Organization, pursuant to the Patent Cooperation Treaty.

6. A record in this system of records may be disclosed, as a routine use, to another federal agency for purposes of National Security review (35 U.S.C. 181) and for review pursuant to the Atomic Energy Act (42 U.S.C. 218(c)).

7. A record from this system of records may be disclosed, as a routine use, to the Administrator, General Services, or his/her designee, during an inspection of records conducted by GSA as part of that agency's responsibility to recommend improvements in records management practices and programs, under authority of 44 U.S.C. 2904 and 2906. Such disclosure shall be made in accordance with the GSA regulations governing inspection of records for this purpose, and any other relevant (i.e., GSA or Commerce) directive. Such disclosure shall not be used to make determinations about individuals.

8. A record from this system of records may be disclosed, as a routine use, to the public after either publication of the application pursuant to 35 U.S.C. 122(b) or issuance of a patent pursuant to 35 U.S.C. 151. Further, a record may be disclosed, subject to the limitations of 37 CFR 1.14, as a routine use, to the public if the record was filed in an application which became abandoned or in which the proceedings were terminated and which application is referenced by either a published application, an application open to public inspections or an issued patent.

9. A record from this system of records may be disclosed, as a routine use, to a Federal, State, or local law enforcement agency, if the USPTO becomes aware of a violation or potential violation of law or regulation.

UNITED STATES PATENT AND TRADEMARK OFFICE

UNITED STATES DEPARTMENT OF COMMERCE
United States Patent and Trademark Office
Address: COMMISSIONER FOR PATENTS
P.O. Box 1450
Alexandria, Virginia 22313-1450
www.uspto.gov

APPLICATION NO.	FILING DATE	FIRST NAMED INVENTOR	ATTORNEY DOCKET NO.	CONFIRMATION NO.
09/449,021	11/24/1999	HELMUT EMMELMANN	EMME-1000US0	5718

8685 7590 11/22/2011

DERGOSITS & NOAH LLP
Three Embarcadero Center
Suite 410
SAN FRANCISCO, CA 94111

EXAMINER	
KENDALL, CHUCK O	
ART UNIT	PAPER NUMBER
2192	

MAIL DATE	DELIVERY MODE
11/22/2011	PAPER

Please find below and/or attached an Office communication concerning this application or proceeding.

The time period for reply, if any, is set in the attached communication.

UNITED STATES PATENT AND TRADEMARK OFFICE

Commissioner for Patents
United States Patent and Trademark Office
P.O. Box 1450
Alexandria, VA 22313-1450
www.uspto.gov

Richard A. Nebb
Dergosits & Noah LLP
3 Embarcadero Center, Suite 410
San Francisco, CA 94111

MAILED

NOV 22 2011

Technology Center 2100

In re Application of:
Helmut Emmelmann et al.
Application No. 09/449,021
Filed: November 24,1999
For: INTERACTIVE SERVER SIDE COMPONENTS

DECISION ON REQUEST TO RECONSIDER REINCLUSION OF CAIMS INTO APPEAL

This is a decision on the petition filed September 13, 2011 under 37 C.F.R. § 1.182 for entry of claims filed on or after an appeal brief has been filed.

The petition is DENIED.

RELEVANT BACKGROUND

In rejection mailed January 21, 2010. all pending claims 1-6, 8, 22-33, 41-43, 51-96, and 114-128 are finally rejected under 35 USC 103 as being unpatentable over Web Writer: A Browsers-Based Editor for Constructing Web Applications Crespo et al. published in 1996 in view of Web Writer II, Crespo et al. published 1997.

In response to the Final Rejection, Petitioner filed a Notice of Appeal on February 12, 2010 and an Appeal Brief on May 12, 2010 traversing the rejection of all claims pending.

An Examiner's Answer was filed on October 13, 2010 in response to the Appeal Brief. In this answer, the Examiner maintained the rejection against claims 1, 22, 23, 26, 30, 32, 41, 42, 59-63, 67-69, and 71-73 but withdrew the rejection of claims 3-5, 24, 25, 27-29, 31, 43, 64-66 and 70.

In an Amendment after Final accompanying a Reply Brief filed December 13, 2010, Petitioner canceled claims objected to in the Examiner's Answer, claims 3-5, 24, 25, 27-29, 31, 43, 64-66 and 70. These claims were filed in a continuation filed December 13, 2010.

An Examiner's Answer mailed July 12, 2011, claims 1, 2, 22-23, 41 are rejected under 35 USC 103 as being unpatentable over "WebWriter II: Responsive Interaction for a Large Web

Application" in view of Faustini USPN 5,842,020 and claims 26, 30, 32, 33, 59-63, 67-69, and 71-73 under 35 USC 103 Web Writer": A Browers-Based Editor for Constructing Web Applications" in view of Faustini USPN 5,842,020.

On September 13, 2011, a Reply Brief along with this petition was filed. In the petition, a request was made to reinstate claims 3-5, 24, 25, 27-29, 31, 43, 64-66 and 70 in the appeal.

On October 11, 2011, Applicant submitted a summary of interview with the examiner. In this summary, Applicant alleges that a request was made to the Examiner for reinstatement of claims originally canceled from the instant application. Applicant also noted that agreement was reached language that would make claims allowable. However, a review of claims submitted in SN 12/966,976 reveals that not all claims were amended include the agreed upon language and claims which did not include such language was in fact rejected over prior art.

RELEVANT STATUTES

MPEP 1206 and37 CFR 41.33 address amendments and affidavits or other evidence after appeal.

37 CFR 41.33

(a) Amendments filed after the date of filing an appeal pursuant to §41.31(a)(1) through (a)(3) and prior to the date a brief is filed pursuant to §41.37 may be admitted as provided in §1.116 of this title.

(b) Amendments filed on or after the date of filing a brief pursuant to §41.37 may be admitted:

(1) To cancel claims, where such cancellation does not affect the scope of any other pending claim in the proceeding, or

(2) To rewrite dependent claims into independent form.

(c) All other amendments filed after the date of filing an appeal pursuant to §41.31(a)(1) through (a)(3) will not be admitted except as permitted by §41.39(b)(1), 41.50(a)(2)(i), 41.50(b)(1) and 41.50(c).

(d) (1) An affidavit or other evidence filed after the date of filing an appeal pursuant to §41.31(a)(1) through (a)(3) and prior to the date of filing a brief pursuant to § 41.37 may be admitted if the examiner determines that the affidavit or other evidence overcomes all rejections under appeal and that a showing of good and sufficient reasons why the affidavit or other evidence is necessary and was not earlier presented has been made.

(2) All other affidavits or other evidence filed after the date of filing an appeal pursuant to §41.31(a)(1) through (a)(3) will not be admitted except as permitted by §41.39(b)(1), 41.50(a)(2)(i) and 41.50(b)(1).

MPEP 1206 Amendments and Affidavits or Other Evidence Filed With or After

Amendments filed on or after the date of filing a brief pursuant to 37 CFR 41.37 may be

admitted only to:

(A) cancel claims, where such cancellation does not affect the scope of any other pending claim in the proceeding; or

(B) rewrite dependent claims into independent form.

Rewriting dependent claims into independent form as permitted under 37 CFR 41.33(b)(2) includes the following situations:

(A) rewriting a dependent claim in independent form by adding thereto the limitations of the parent claim(s); and

(B) rewriting an independent claim to incorporate therein all the subject matter of a dependent claim, canceling the dependent claim and in conjunction therewith changing the dependency of claims which had depended from the dependent claim being canceled to the amended independent claim that incorporates therein all the subject matter of the now canceled dependent claim.

DECISION

The request to reinstate claims accompanied the Reply Brief filed December 13, 2010. Thus, the request was filed after the brief was filed. In such circumstances, the authority of the examiner to enter amendments is limited to cancelation of claims or rewriting claims in independent form. Petitioners request to enter claims is neither a cancelation of claims nor a request to place pending dependent claims in independent form.

Thus, the examiner does not have the authority to enter requests made by Petitioner to reinstate claims 3-5, 24, 25, 27-29, 31, 43, 64-66 and 70 as part of the appeal.

For this reason, the request is **DENIED**.

Any inquiry concerning this decision should be directed to the undersigned whose telephone number is (571) 272-3591.

/Gail O. Hayes/

Gail O. Hayes
Special Program Examiner/Quality Assurance Specialist
Technology Center 2100
Computer Architecture, Software, and
Information Security

UNITED STATES PATENT AND TRADEMARK OFFICE

Commissioner for Patents
United States Patent and Trademark Office
P.O. Box 1450
Alexandria, VA 22313-1450
www.uspto.gov

In re Patent No. 6414746
Issue Date: July 2,2002
Application No. 09449091
Filed: November 24,1999
Attorney Docket No. 1900/15

:
:DECISION GRANTING PETITION
:UNDER 37 CFR 1.378(c)
:

This is a decision on the electronic petition, filed August 31,2010 ,under 37 CFR 1.378(c) to accept the unintentionally delayed payment of the 7.5 year maintenance fee for the above-identified patent.

The petition is **GRANTED**.

The maintenance fee is accepted, and the above-identified patent reinstated as of August 31,2010 . This decision also constitutes notice that the fee has been accepted. An electronic copy of the petition and this decision has been created as an entry in the Image File Wrapper. Nevertheless, petitioner should print and retain an independent copy.

Telephone inquiries related to this electronic decision should be directed to the Electronic Business Center at 1-866-217-9197.

PTO/SB/66 (03-09)
Approved for use through 03/31/2012. OMB 0651-0016
U.S. Patent and Trademark Office: U.S. DEPARTMENT OF COMMERCE
Under the Paperwork Reduction Act of 1995, no persons are required to respond to a collection of information unless it displays valid OMB control number.

PETITION TO ACCEPT UNINTENTIONALLY DELAYED PAYMENT OF MAINTENANCE FEE IN AN EXPIRED PATENT (37 CFR 1.378(c))

Patent Number	Issue Date (YYYY-MM-DD)	Application Number	Filing Date (YYYY-MM-DD)	Docket Number (if applicable)
6414746	2002-07-02	09/449,091	1999-11-24	1900/015

CAUTION: Maintenance fee (and surcharge, if any) payment must correctly identify: (1) the patent number and (2) the application number of the actual U.S. application leading to issuance of that patent to ensure the fee(s) is/are associated with the correct patent. 37 CFR 1.366(c) and (d).

SMALL ENTITY

☒ Patentee claims, or has previously claimed, small entity status. See 37 CFR 1.27.

LOSS OF ENTITLEMENT TO SMALL ENTITY STATUS

☐ Patentee is no longer entitled to small entity status. See 37 CFR 1.27(g)

NOT Small Entity	Fee	Code	Small Entity	Fee	Code
○	3 ½ year	(1551)	○	3 ½ year	(2551)
○	7 ½ year	(1552)	◉	7 ½ year	(2552)
○	11 ½ year	(1553)	○	11 ½ year	(2553)

SURCHARGE

The surcharge required by 37 CFR 1.20(i)(2) (Fee Code 1558) must be paid as a condition of accepting unintentionally delayed payment of the maintenance fee.

MAINTENANCE FEE (37 CFR 1.20(e)-(g))

The appropriate maintenance fee must be submitted with this petition.

STATEMENT

THE UNDERSIGNED CERTIFIES THAT THE DELAY IN PAYMENT OF THE MAINTENANCE FEE TO THIS PATENT WAS UNINTENTIONAL

PETITIONER(S) REQUEST THAT THE DELAYED PAYMENT OF THE MAINTENANCE FEE BE ACCEPTED AND THE PATENT REINSTATED

THIS PORTION MUST BE COMPLETED BY THE SIGNATORY OR SIGNATORIES

37 CFR 1.378(d) states: "Any petition under this section must be signed by an attorney or agent registered to practice before the Patent and Trademark Office, or by the patentee, the assignee, or other party in interest."

I certify, in accordance with 37 CFR 1.4(d)(4) that I am

◉ An attorney or agent registered to practice before the Patent and Trademark Office

○ A sole patentee

○ A joint patentee; I certify that I am authorized to sign this submission on behalf of all the other patentees.

○ A joint patentee; all of whom are signing this e-petition

○ The assignee of record of the entire interest

PTO/SB/66 (03-09)
Approved for use through 03/31/2012. OMB 0651-0016
U.S. Patent and Trademark Office: U.S. DEPARTMENT OF COMMERCE
Under the Paperwork Reduction Act of 1995, no persons are required to respond to a collection of information unless it displays valid OMB control number.

Patent Practitioner			
A signature of the applicant or representative is required in accordance with 37 CFR 1.33 and 10.18. Please see 37 CFR 1.4(d) for the form of the signature			
Signature	/Allen I. Rubenstein/	Date (YYYY-MM-DD)	2010-08-31
Name	Allen I. Rubenstein	Registration Number	27673

This collection of information is required by 37 CFR 1.378(c). The information is required to obtain or retain a benefit by the public which is to file (and by the USPTO to process) an application. Confidentiality is governed by 35 U.S.C. 122 and 37 CFR 1.11 and 1.14. This collection is estimated to take 1 hour to complete, including gathering, preparing, and submitting the completed application form to the USPTO. Time will vary depending upon the individual case. Any comments on the amount of time you require to complete this form and/ or suggestions for reducing this burden, should be sent to the Chief Information Officer, U.S. Patent and Trademark Office, U.S. Department of Commerce, P.O. Box 1450, Alexandria, VA 22313-1450. DO NOT SEND FEES OR COMPLETED FORMS TO THIS ADDRESS. **This form can only be used when in conjunction with EFS-Web. If this form is mailed to the USPTO, it may cause delays in reinstating the patent.**

Privacy Act Statement

The Privacy Act of 1974 (P.L. 93-579) requires that you be given certain information in connection with your submission of the attached form related to a patent application or patent. Accordingly, pursuant to the requirements of the Act, please be advised that: (1) the general authority for the collection of this information is 35 U.S.C. 2(b)(2); (2) furnishing of the information solicited is voluntary; and (3) the principal purpose for which the information is used by the U.S. Patent and Trademark Office is to process and/or examine your submission related to a patent application or patent. If you do not furnish the requested information, the U.S. Patent and Trademark Office may not be able to process and/or examine your submission, which may result in termination of proceedings or abandonment of the application or expiration of the patent.

The information provided by you in this form will be subject to the following routine uses:

1. The information on this form will be treated confidentially to the extent allowed under the Freedom of Information Act (5 U.S.C. 552) and the Privacy Act (5 U.S.C. 552a). Records from this system of records may be disclosed to the Department of Justice to determine whether the Freedom of Information Act requires disclosure of these records.

2. A record from this system of records may be disclosed, as a routine use, in the course of presenting evidence to a court, magistrate, or administrative tribunal, including disclosures to opposing counsel in the course of settlement negotiations.

3. A record in this system of records may be disclosed, as a routine use, to a Member of Congress submitting a request involving an individual, to whom the record pertains, when the individual has requested assistance from the Member with respect to the subject matter of the record.

4. A record in this system of records may be disclosed, as a routine use, to a contractor of the Agency having need for the information in order to perform a contract. Recipients of information shall be required to comply with the requirements of the Privacy Act of 1974, as amended, pursuant to 5 U.S.C. 552a(m).

5. A record related to an International Application filed under the Patent Cooperation Treaty in this system of records may be disclosed, as a routine use, to the International Bureau of the World Intellectual Property Organization, pursuant to the Patent Cooperation Treaty.

6. A record in this system of records may be disclosed, as a routine use, to another federal agency for purposes of National Security review (35 U.S.C. 181) and for review pursuant to the Atomic Energy Act (42 U.S.C. 218(c)).

7. A record from this system of records may be disclosed, as a routine use, to the Administrator, General Services, or his/her designee, during an inspection of records conducted by GSA as part of that agency's responsibility to recommend improvements in records management practices and programs, under authority of 44 U.S.C. 2904 and 2906. Such disclosure shall be made in accordance with the GSA regulations governing inspection of records for this purpose, and any other relevant (i.e., GSA or Commerce) directive. Such disclosure shall not be used to make determinations about individuals.

8. A record from this system of records may be disclosed, as a routine use, to the public after either publication of the application pursuant to 35 U.S.C. 122(b) or issuance of a patent pursuant to 35 U.S.C. 151. Further, a record may be disclosed, subject to the limitations of 37 CFR 1.14, as a routine use, to the public if the record was filed in an application which became abandoned or in which the proceedings were terminated and which application is referenced by either a published application, an application open to public inspections or an issued patent.

9. A record from this system of records may be disclosed, as a routine use, to a Federal, State, or local law enforcement agency, if the USPTO becomes aware of a violation or potential violation of law or regulation.

UNITED STATES PATENT AND TRADEMARK OFFICE

Commissioner for Patents
United States Patent and Trademark Office
P.O. Box 1450
Alexandria, VA 22313-1450
www.uspto.gov

In re Patent No. 6503890
Issue Date: January 7,2003
Application No. 09450082
Filed: November 29,1999
Attorney Docket No. 12152.15USI1

:
:DECISION GRANTING PETITION
:UNDER 37 CFR 1.378(c)
:

This is a decision on the electronic petition, filed September 22,2011 ,under 37 CFR 1.378(c) to accept the unintentionally delayed payment of the 7.5 year maintenance fee for the above-identified patent.

The petition is **GRANTED**.

The maintenance fee is accepted, and the above-identified patent reinstated as of September 22,2011 . This decision also constitutes notice that the fee has been accepted. An electronic copy of the petition and this decision has been created as an entry in the Image File Wrapper. Nevertheless, petitioner should print and retain an independent copy.

Telephone inquiries related to this electronic decision should be directed to the Electronic Business Center at 1-866-217-9197.

PTO/SB/66 (03-09)
Approved for use through 03/31/2012. OMB 0651-0016
U.S. Patent and Trademark Office: U.S. DEPARTMENT OF COMMERCE
Under the Paperwork Reduction Act of 1995, no persons are required to respond to a collection of information unless it displays valid OMB control number.

PETITION TO ACCEPT UNINTENTIONALLY DELAYED PAYMENT OF MAINTENANCE FEE IN AN EXPIRED PATENT (37 CFR 1.378(c))

Patent Number	Issue Date (YYYY-MM-DD)	Application Number	Filing Date (YYYY-MM-DD)	Docket Number (if applicable)
6,503,890	2003-01-07	09/450,082	1999-11-29	379887

CAUTION: Maintenance fee (and surcharge, if any) payment must correctly identify: (1) the patent number and (2) the application number of the actual U.S. application leading to issuance of that patent to ensure the fee(s) is/are associated with the correct patent. 37 CFR 1.366(c) and (d).

SMALL ENTITY

☒ Patentee claims, or has previously claimed, small entity status. See 37 CFR 1.27.

LOSS OF ENTITLEMENT TO SMALL ENTITY STATUS

☐ Patentee is no longer entitled to small entity status. See 37 CFR 1.27(g)

NOT Small Entity	Fee	Code	Small Entity	Fee	Code
○	3 ½ year	(1551)	○	3 ½ year	(2551)
○	7 ½ year	(1552)	◉	7 ½ year	(2552)
○	11 ½ year	(1553)	○	11 ½ year	(2553)

SURCHARGE

The surcharge required by 37 CFR 1.20(i)(2) (Fee Code 1558) must be paid as a condition of accepting unintentionally delayed payment of the maintenance fee.

MAINTENANCE FEE (37 CFR 1.20(e)-(g))

The appropriate maintenance fee must be submitted with this petition.

STATEMENT

THE UNDERSIGNED CERTIFIES THAT THE DELAY IN PAYMENT OF THE MAINTENANCE FEE TO THIS PATENT WAS UNINTENTIONAL

PETITIONER(S) REQUEST THAT THE DELAYED PAYMENT OF THE MAINTENANCE FEE BE ACCEPTED AND THE PATENT REINSTATED

THIS PORTION MUST BE COMPLETED BY THE SIGNATORY OR SIGNATORIES

37 CFR 1.378(d) states: "Any petition under this section must be signed by an attorney or agent registered to practice before the Patent and Trademark Office, or by the patentee, the assignee, or other party in interest."

I certify, in accordance with 37 CFR 1.4(d)(4) that I am

○ An attorney or agent registered to practice before the Patent and Trademark Office

○ A sole patentee

○ A joint patentee; I certify that I am authorized to sign this submission on behalf of all the other patentees.

○ A joint patentee; all of whom are signing this e-petition

◉ The assignee of record of the entire interest

PTO/SB/66 (03-09)
Approved for use through 03/31/2012. OMB 0651-0016
U.S. Patent and Trademark Office: U.S. DEPARTMENT OF COMMERCE
Under the Paperwork Reduction Act of 1995, no persons are required to respond to a collection of information unless it displays valid OMB control number.

The Assignee of record of the entire interest			
Under 37 CFR 3.71 an assignee becomes of record by filing a statement in compliance with 37 CFR 3.73(b). Signature requirements are set forth in 37 CFR 1.4(d), and the undersigned certifies that he / she is empowered to act on behalf of the assignee of the entire interest			
Signature	/ Fatih M. Uckun /	Date (YYYY-MM-DD)	2011-09-19
Name	Fatih M. Uckun		
Enter Reel and Frame Number		Remove	
Reel Number	022764	Frame Number	0812
Click ADD for additional Reel Number and Frame Number		Add	

This collection of information is required by 37 CFR 1.378(c). The information is required to obtain or retain a benefit by the public which is to file (and by the USPTO to process) an application. Confidentiality is governed by 35 U.S.C. 122 and 37 CFR 1.11 and 1.14. This collection is estimated to take 1 hour to complete, including gathering, preparing, and submitting the completed application form to the USPTO. Time will vary depending upon the individual case. Any comments on the amount of time you require to complete this form and/or suggestions for reducing this burden, should be sent to the Chief Information Officer, U.S. Patent and Trademark Office, U.S. Department of Commerce, P.O. Box 1450, Alexandria, VA 22313-1450. DO NOT SEND FEES OR COMPLETED FORMS TO THIS ADDRESS. **This form can only be used when in conjunction with EFS-Web. If this form is mailed to the USPTO, it may cause delays in reinstating the patent.**

Privacy Act Statement

The Privacy Act of 1974 (P.L. 93-579) requires that you be given certain information in connection with your submission of the attached form related to a patent application or patent. Accordingly, pursuant to the requirements of the Act, please be advised that: (1) the general authority for the collection of this information is 35 U.S.C. 2(b)(2); (2) furnishing of the information solicited is voluntary; and (3) the principal purpose for which the information is used by the U.S. Patent and Trademark Office is to process and/or examine your submission related to a patent application or patent. If you do not furnish the requested information, the U.S. Patent and Trademark Office may not be able to process and/or examine your submission, which may result in termination of proceedings or abandonment of the application or expiration of the patent.

The information provided by you in this form will be subject to the following routine uses:

1. The information on this form will be treated confidentially to the extent allowed under the Freedom of Information Act (5 U.S.C. 552) and the Privacy Act (5 U.S.C. 552a). Records from this system of records may be disclosed to the Department of Justice to determine whether the Freedom of Information Act requires disclosure of these records.

2. A record from this system of records may be disclosed, as a routine use, in the course of presenting evidence to a court, magistrate, or administrative tribunal, including disclosures to opposing counsel in the course of settlement negotiations.

3. A record in this system of records may be disclosed, as a routine use, to a Member of Congress submitting a request involving an individual, to whom the record pertains, when the individual has requested assistance from the Member with respect to the subject matter of the record.

4. A record in this system of records may be disclosed, as a routine use, to a contractor of the Agency having need for the information in order to perform a contract. Recipients of information shall be required to comply with the requirements of the Privacy Act of 1974, as amended, pursuant to 5 U.S.C. 552a(m).

5. A record related to an International Application filed under the Patent Cooperation Treaty in this system of records may be disclosed, as a routine use, to the International Bureau of the World Intellectual Property Organization, pursuant to the Patent Cooperation Treaty.

6. A record in this system of records may be disclosed, as a routine use, to another federal agency for purposes of National Security review (35 U.S.C. 181) and for review pursuant to the Atomic Energy Act (42 U.S.C. 218(c)).

7. A record from this system of records may be disclosed, as a routine use, to the Administrator, General Services, or his/her designee, during an inspection of records conducted by GSA as part of that agency's responsibility to recommend improvements in records management practices and programs, under authority of 44 U.S.C. 2904 and 2906. Such disclosure shall be made in accordance with the GSA regulations governing inspection of records for this purpose, and any other relevant (i.e., GSA or Commerce) directive. Such disclosure shall not be used to make determinations about individuals.

8. A record from this system of records may be disclosed, as a routine use, to the public after either publication of the application pursuant to 35 U.S.C. 122(b) or issuance of a patent pursuant to 35 U.S.C. 151. Further, a record may be disclosed, subject to the limitations of 37 CFR 1.14, as a routine use, to the public if the record was filed in an application which became abandoned or in which the proceedings were terminated and which application is referenced by either a published application, an application open to public inspections or an issued patent.

9. A record from this system of records may be disclosed, as a routine use, to a Federal, State, or local law enforcement agency, if the USPTO becomes aware of a violation or potential violation of law or regulation.

UNITED STATES PATENT AND TRADEMARK OFFICE

Commissioner for Patents
United States Patent and Trademark Office
P.O. Box 1450
Alexandria, VA 22313-1450
www.uspto.gov

Paper No.

G TURNER MOLLER
720 AMERICAN BANK PLAZA
CORPUS CHRISTI, TX 78475

MAILED
AUG 05 2011
OFFICE OF PETITIONS

In re Patent No. 6,267,883 :
Issue Date: July 31, 2001 :
Application No. 09/450,283 : ON PETITION
Filed: November 26, 1999 :
Patentee: Roy J. Weaver, et al. :

This is a decision in response to a petition under 37 CFR 1.378(c), filed July 18, 2011, to accept an unintentionally delayed payment of a maintenance fee for the above-identified patent.

The petition is DISMISSED.

A petition to accept the unintentionally delayed payment of a maintenance fee under 35 U.S.C. 41(c) and 37 CFR 1.378(c) must be accompanied by: (1) a statement that the delay was unintentional; (2) payment of the appropriate maintenance fee, unless previously submitted; (3) payment of the surcharge set forth in 37 CFR 1.20(i)(2).

The petition lacks item (1) above. In this regard, the petition is not signed, as required by 37 CFR 1.378(d), by an attorney or agent registered to practice before the Patent and Trademark Office, the patentee, or the assignee or other party in interest as established by 37 CFR 3.73(b).[1] Consequently, the petition is considered not to contain a proper statement of unintentional delay and, therefore, cannot be accepted.

If reconsideration of this decision is desired, a properly signed petition for reconsideration under 37 CFR 1.378(e) must be filed within TWO (2) MONTHS from the mail date of this decision. No extension of this 2-month time limit can be granted under 37 CFR 1.136(a) or (b). **Any such petition for reconsideration must be accompanied by the petition fee of $400 as set forth in 37 CFR 1.17(f). The petition for reconsideration must also include any lacking item(s) noted above, since, after a decision on the petition for reconsideration, no further reconsideration or review of the matter will be undertaken by the Director.**

The file does not indicate a change of address has been submitted, although the address given on the petition differs from the address of record. If appropriate, a change of address should be filed

[1] 37 CFR 3.73(b) provides that: (1) when an assignee seeks to take action in a matter before the Office, the assignee must establish its ownership of the property to the satisfaction of the Commissioner; (2) ownership is established by submitting to the Office, in the Office file related to the matter in which action is sought to be taken, documentary evidence of a chain of title from the original owner to the assignee (e.g., copy of an executed assignment submitted for recording) or by specifying (e.g., reel and frame number) where such evidence is recorded in the Office; (3) the submission establishing ownership must be signed by a party authorized to act on behalf of the assignee; and (4) documents submitted to establish ownership may be required to be recorded as a condition to permitting the assignee to take action in a matter pending before the Office.

in accordance with MPEP 601.03. A courtesy copy of this decision is being mailed to the address given on the petition; however, the Office will mail all future correspondence solely to the address of record.

Further correspondence with respect to this matter should be delivered through one of the following mediums:

By mail:	Mail Stop PETITIONS Commissioner for Patents Post Office Box 1450 Alexandria, VA 22313-1450
By hand:	Customer Service Window Mail Stop Petitions Randolph Building 401 Dulany Street Alexandria, VA 22314
By fax:	(571) 273-8300 ATTN: Office of Petitions
By Internet:	EFS-Web[2]

If petitioner does not wish to pursue reinstatement of this expired patent, petitioner may request a refund of the $1,240 maintenance fee and the $1,640 surcharge fee submitted with the petition. The request should be made in writing and addressed to: Mail Stop 16, Director of the U.S. Patent and Trademark Office, P. O. Box 1450, Alexandria, VA 22313-1450. A copy of this decision should accompany petitioner's request.

Any questions concerning this matter may be directed to the undersigned at (571) 272-3204.

/SDB/

Sherry D. Brinkley
Petitions Examiner
Office of Petitions

cc: KATHY CRANE
1125 BRADSHAW DR.
CORPUS CHRISTI, TX 78412

[2] www.uspto.gov/ebc/efs_help.html (for help using EFS-Web call the Patent Electronic Business Center at (866) 217-9197)

UNITED STATES PATENT AND TRADEMARK OFFICE

Commissioner for Patents
United States Patent and Trademark Office
P.O. Box 1450
Alexandria, VA 22313-1450
www.uspto.gov

G TURNER MOLLER
720 AMERICAN BANK PLAZA
CORPUS CHRISTI TX 78475

MAILED

SEP 14 2011

OFFICE OF PETITIONS

In re Patent No. 6,267,883 :
Issue Date: July 31, 2001 :
Application No. 09/450,283 : ON PETITION
Filed: November 26, 1999 :
Attorney Docket No.: None :

This is a decision on the renewed petition, filed August 29, 2011, under 37 CFR 1.378(c) to accept the unintentionally delayed payment of a maintenance fee for the above-identified patent.

The renewed petition is found to comply with the requirements of 35 U.S.C. 41(c) and 37 CFR 1.378(c) (d) and (e). Accordingly, the petition is **GRANTED**.

The 7 ½ year maintenance fee in this case is hereby accepted and the above-identified patent is reinstated as of the mail date of this decision.

It is noted that the address given on the petition differs from the address of record. If appropriate, a change of address should be filed in accordance with MPEP 601.03. Further, it is noted that the petition includes a Power of Attorney. The Power of Attorney is not accepted as it is not signed by all the inventors in accordance with 37 CFR 1.33(b).

Petitioner is reminded that the mere filing of a power of attorney or a change of correspondence address does not affect fee address. Therefore, if petitioner desires to receive future correspondence regarding any Maintenance Fee Reminder which may be mailed regarding maintenance fees for the above-identified patent, an appropriate "fee address" and/or "customer number" form should be submitted to the Maintenance Fee Division. A courtesy copy of this decision is being mailed to the address given on the petition.

Telephone inquiries concerning this matter may be directed to the undersigned at (571) 272-3204.

/SDB/

Sherry D. Brinkley
Petitions Examiner
Office of Petitions

cc: G. TURNER MOLLER
711 N. CARANCAHUA, SUIITE 720
CORPUS CHRISTI, TX 78401-0543

UNITED STATES PATENT AND TRADEMARK OFFICE

Commissioner for Patents
United States Patent and Trademark Office
P.O. Box 1450
Alexandria, VA 22313-1450
www.uspto.gov

In re Patent No. 6976342
Issue Date: December 20,2005
Application No. 09450385
Filed: November 29,1999
Attorney Docket No. KOWAL-001

:
:DECISION GRANTING PETITION
:UNDER 37 CFR 1.378(c)
:

This is a decision on the electronic petition, filed October 23,2011 ,under 37 CFR 1.378(c) to accept the unintentionally delayed payment of the 3.5 year maintenance fee for the above-identified patent.

The petition is **GRANTED**.

The maintenance fee is accepted, and the above-identified patent reinstated as of October 23,2011 . This decision also constitutes notice that the fee has been accepted. An electronic copy of the petition and this decision has been created as an entry in the Image File Wrapper. Nevertheless, petitioner should print and retain an independent copy.

Telephone inquiries related to this electronic decision should be directed to the Electronic Business Center at 1-866-217-9197.

PTO/SB/66 (03-09)
Approved for use through 03/31/2012. OMB 0651-0016
U.S. Patent and Trademark Office: U.S. DEPARTMENT OF COMMERCE
Under the Paperwork Reduction Act of 1995, no persons are required to respond to a collection of information unless it displays valid OMB control number.

PETITION TO ACCEPT UNINTENTIONALLY DELAYED PAYMENT OF MAINTENANCE FEE IN AN EXPIRED PATENT (37 CFR 1.378(c))

Patent Number	Issue Date (YYYY-MM-DD)	Application Number	Filing Date (YYYY-MM-DD)	Docket Number (if applicable)
6976342	2005-12-20	09450385	1999-11-29	V0191

CAUTION: Maintenance fee (and surcharge, if any) payment must correctly identify: (1) the patent number and (2) the application number of the actual U.S. application leading to issuance of that patent to ensure the fee(s) is/are associated with the correct patent. 37 CFR 1.366(c) and (d).

SMALL ENTITY

☒ Patentee claims, or has previously claimed, small entity status. See 37 CFR 1.27.

LOSS OF ENTITLEMENT TO SMALL ENTITY STATUS

☐ Patentee is no longer entitled to small entity status. See 37 CFR 1.27(g)

NOT Small Entity			Small Entity		
	Fee	Code		Fee	Code
○	3 ½ year	(1551)	◉	3 ½ year	(2551)
○	7 ½ year	(1552)	○	7 ½ year	(2552)
○	11 ½ year	(1553)	○	11 ½ year	(2553)

SURCHARGE

The surcharge required by 37 CFR 1.20(i)(2) (Fee Code 1558) must be paid as a condition of accepting unintentionally delayed payment of the maintenance fee.

MAINTENANCE FEE (37 CFR 1.20(e)-(g))

The appropriate maintenance fee must be submitted with this petition.

STATEMENT

THE UNDERSIGNED CERTIFIES THAT THE DELAY IN PAYMENT OF THE MAINTENANCE FEE TO THIS PATENT WAS UNINTENTIONAL

PETITIONER(S) REQUEST THAT THE DELAYED PAYMENT OF THE MAINTENANCE FEE BE ACCEPTED AND THE PATENT REINSTATED

THIS PORTION MUST BE COMPLETED BY THE SIGNATORY OR SIGNATORIES

37 CFR 1.378(d) states: "Any petition under this section must be signed by an attorney or agent registered to practice before the Patent and Trademark Office, or by the patentee, the assignee, or other party in interest."

I certify, in accordance with 37 CFR 1.4(d)(4) that I am

◉ An attorney or agent registered to practice before the Patent and Trademark Office

○ A sole patentee

○ A joint patentee; I certify that I am authorized to sign this submission on behalf of all the other patentees.

○ A joint patentee; all of whom are signing this e-petition

○ The assignee of record of the entire interest

PTO/SB/66 (03-09)
Approved for use through 03/31/2012. OMB 0651-0016
U.S. Patent and Trademark Office: U.S. DEPARTMENT OF COMMERCE
Under the Paperwork Reduction Act of 1995, no persons are required to respond to a collection of information unless it displays valid OMB control number.

Patent Practitioner			
A signature of the applicant or representative is required in accordance with 37 CFR 1.33 and 10.18. Please see 37 CFR 1.4(d) for the form of the signature			
Signature	/John F. Vodopia/	Date (YYYY-MM-DD)	2011-10-23
Name	John F. Vodopia	Registration Number	36299

This collection of information is required by 37 CFR 1.378(c). The information is required to obtain or retain a benefit by the public which is to file (and by the USPTO to process) an application. Confidentiality is governed by 35 U.S.C. 122 and 37 CFR 1.11 and 1.14. This collection is estimated to take 1 hour to complete, including gathering, preparing, and submitting the completed application form to the USPTO. Time will vary depending upon the individual case. Any comments on the amount of time you require to complete this form and/ or suggestions for reducing this burden, should be sent to the Chief Information Officer, U.S. Patent and Trademark Office, U.S. Department of Commerce, P.O. Box 1450, Alexandria, VA 22313-1450. DO NOT SEND FEES OR COMPLETED FORMS TO THIS ADDRESS. **This form can only be used when in conjunction with EFS-Web. If this form is mailed to the USPTO, it may cause delays in reinstating the patent.**

Privacy Act Statement

The Privacy Act of 1974 (P.L. 93-579) requires that you be given certain information in connection with your submission of the attached form related to a patent application or patent. Accordingly, pursuant to the requirements of the Act, please be advised that: (1) the general authority for the collection of this information is 35 U.S.C. 2(b)(2); (2) furnishing of the information solicited is voluntary; and (3) the principal purpose for which the information is used by the U.S. Patent and Trademark Office is to process and/or examine your submission related to a patent application or patent. If you do not furnish the requested information, the U.S. Patent and Trademark Office may not be able to process and/or examine your submission, which may result in termination of proceedings or abandonment of the application or expiration of the patent.

The information provided by you in this form will be subject to the following routine uses:

1. The information on this form will be treated confidentially to the extent allowed under the Freedom of Information Act (5 U.S.C. 552) and the Privacy Act (5 U.S.C. 552a). Records from this system of records may be disclosed to the Department of Justice to determine whether the Freedom of Information Act requires disclosure of these records.

2. A record from this system of records may be disclosed, as a routine use, in the course of presenting evidence to a court, magistrate, or administrative tribunal, including disclosures to opposing counsel in the course of settlement negotiations.

3. A record in this system of records may be disclosed, as a routine use, to a Member of Congress submitting a request involving an individual, to whom the record pertains, when the individual has requested assistance from the Member with respect to the subject matter of the record.

4. A record in this system of records may be disclosed, as a routine use, to a contractor of the Agency having need for the information in order to perform a contract. Recipients of information shall be required to comply with the requirements of the Privacy Act of 1974, as amended, pursuant to 5 U.S.C. 552a(m).

5. A record related to an International Application filed under the Patent Cooperation Treaty in this system of records may be disclosed, as a routine use, to the International Bureau of the World Intellectual Property Organization, pursuant to the Patent Cooperation Treaty.

6. A record in this system of records may be disclosed, as a routine use, to another federal agency for purposes of National Security review (35 U.S.C. 181) and for review pursuant to the Atomic Energy Act (42 U.S.C. 218(c)).

7. A record from this system of records may be disclosed, as a routine use, to the Administrator, General Services, or his/her designee, during an inspection of records conducted by GSA as part of that agency's responsibility to recommend improvements in records management practices and programs, under authority of 44 U.S.C. 2904 and 2906. Such disclosure shall be made in accordance with the GSA regulations governing inspection of records for this purpose, and any other relevant (i.e., GSA or Commerce) directive. Such disclosure shall not be used to make determinations about individuals.

8. A record from this system of records may be disclosed, as a routine use, to the public after either publication of the application pursuant to 35 U.S.C. 122(b) or issuance of a patent pursuant to 35 U.S.C. 151. Further, a record may be disclosed, subject to the limitations of 37 CFR 1.14, as a routine use, to the public if the record was filed in an application which became abandoned or in which the proceedings were terminated and which application is referenced by either a published application, an application open to public inspections or an issued patent.

9. A record from this system of records may be disclosed, as a routine use, to a Federal, State, or local law enforcement agency, if the USPTO becomes aware of a violation or potential violation of law or regulation.

UNITED STATES PATENT AND TRADEMARK OFFICE

Commissioner for Patents
United States Patent and Trademark Office
P.O. Box 1450
Alexandria, VA 22313-1450
www.uspto.gov

KEVIN M FARRELL
FARRELL & ASSOCIATES P C
P O BOX 999
YORK HARBOR ME 03911

MAILED

JAN 17 2012

OFFICE OF PETITIONS

In re Application of :
Michael Lebner :
Application No. 09/450,488 : NOTICE
Filed: November 29,1999 :
Attorney Docket No. **0156-2002** :

This is a notice regarding your request filed October 21, 2011, for acceptance of a fee deficiency submission under 37 CFR 1.28.

The Office no longer investigates or rejects original or reissue applications under 37 CFR 1.56. **1098 Off. Gaz. Pat. Office 502 (January 3, 1989)**. Therefore, nothing in this Notice is intended to imply that an investigation was done.

Your fee deficiency submission under 37 CFR 1.28 is hereby **ACCEPTED**.

This patent is no longer entitled to small entity status. Accordingly, all future fees paid in this application must be paid at the large entity rate.

Inquiries related to this communication should be directed to the undersigned at (571) 272-4584.

JoAnne Burke
Petitions Examiner
Office of Petitions

UNITED STATES PATENT AND TRADEMARK OFFICE

Commissioner for Patents
United States Patent and Trademark Office
P.O. Box 1450
Alexandria, VA 22313-1450
www.uspto.gov

In re Patent No. 6606103
Issue Date: August 12,2003
Application No. 09450557
Filed: November 30,1999
Attorney Docket No. 56243.000002

:
:DECISION GRANTING PETITION
:UNDER 37 CFR 1.378(c)
:

This is a decision on the electronic petition, filed October 5,2011 ,under 37 CFR 1.378(c) to accept the unintentionally delayed payment of the 7.5 year maintenance fee for the above-identified patent.

The petition is **GRANTED**.

The maintenance fee is accepted, and the above-identified patent reinstated as of October 5,2011 . This decision also constitutes notice that the fee has been accepted. An electronic copy of the petition and this decision has been created as an entry in the Image File Wrapper. Nevertheless, petitioner should print and retain an independent copy.

Telephone inquiries related to this electronic decision should be directed to the Electronic Business Center at 1-866-217-9197.

PTO/SB/66 (03-09)
Approved for use through 03/31/2012. OMB 0651-0016
U.S. Patent and Trademark Office: U.S. DEPARTMENT OF COMMERCE
Under the Paperwork Reduction Act of 1995, no persons are required to respond to a collection of information unless it displays valid OMB control number.

PETITION TO ACCEPT UNINTENTIONALLY DELAYED PAYMENT OF MAINTENANCE FEE IN AN EXPIRED PATENT (37 CFR 1.378(c))

Patent Number	Issue Date (YYYY-MM-DD)	Application Number	Filing Date (YYYY-MM-DD)	Docket Number (if applicable)
6,606,103	2003-08-12	09450557	1999-11-30	56243.000002

CAUTION: Maintenance fee (and surcharge, if any) payment must correctly identify: (1) the patent number and (2) the application number of the actual U.S. application leading to issuance of that patent to ensure the fee(s) is/are associated with the correct patent. 37 CFR 1.366(c) and (d).

SMALL ENTITY

☒ Patentee claims, or has previously claimed, small entity status. See 37 CFR 1.27.

LOSS OF ENTITLEMENT TO SMALL ENTITY STATUS

☐ Patentee is no longer entitled to small entity status. See 37 CFR 1.27(g)

NOT Small Entity			Small Entity		
	Fee	Code		Fee	Code
○	3 ½ year	(1551)	○	3 ½ year	(2551)
○	7 ½ year	(1552)	◉	7 ½ year	(2552)
○	11 ½ year	(1553)	○	11 ½ year	(2553)

SURCHARGE

The surcharge required by 37 CFR 1.20(i)(2) (Fee Code 1558) must be paid as a condition of accepting unintentionally delayed payment of the maintenance fee.

MAINTENANCE FEE (37 CFR 1.20(e)-(g))

The appropriate maintenance fee must be submitted with this petition.

STATEMENT

THE UNDERSIGNED CERTIFIES THAT THE DELAY IN PAYMENT OF THE MAINTENANCE FEE TO THIS PATENT WAS UNINTENTIONAL

PETITIONER(S) REQUEST THAT THE DELAYED PAYMENT OF THE MAINTENANCE FEE BE ACCEPTED AND THE PATENT REINSTATED

THIS PORTION MUST BE COMPLETED BY THE SIGNATORY OR SIGNATORIES

37 CFR 1.378(d) states: "Any petition under this section must be signed by an attorney or agent registered to practice before the Patent and Trademark Office, or by the patentee, the assignee, or other party in interest."

I certify, in accordance with 37 CFR 1.4(d)(4) that I am

◉ An attorney or agent registered to practice before the Patent and Trademark Office

○ A sole patentee

○ A joint patentee; I certify that I am authorized to sign this submission on behalf of all the other patentees.

○ A joint patentee; all of whom are signing this e-petition

○ The assignee of record of the entire interest

PTO/SB/66 (03-09)
Approved for use through 03/31/2012. OMB 0651-0016
U.S. Patent and Trademark Office: U.S. DEPARTMENT OF COMMERCE
Under the Paperwork Reduction Act of 1995, no persons are required to respond to a collection of information unless it displays valid OMB control number.

Patent Practitioner			
A signature of the applicant or representative is required in accordance with 37 CFR 1.33 and 10.18. Please see 37 CFR 1.4(d) for the form of the signature			
Signature	/Yisun Song/	Date (YYYY-MM-DD)	2011-10-05
Name	Yisun Song	Registration Number	44487

This collection of information is required by 37 CFR 1.378(c). The information is required to obtain or retain a benefit by the public which is to file (and by the USPTO to process) an application. Confidentiality is governed by 35 U.S.C. 122 and 37 CFR 1.11 and 1.14. This collection is estimated to take 1 hour to complete, including gathering, preparing, and submitting the completed application form to the USPTO. Time will vary depending upon the individual case. Any comments on the amount of time you require to complete this form and/ or suggestions for reducing this burden, should be sent to the Chief Information Officer, U.S. Patent and Trademark Office, U.S. Department of Commerce, P.O. Box 1450, Alexandria, VA 22313-1450. DO NOT SEND FEES OR COMPLETED FORMS TO THIS ADDRESS. **This form can only be used when in conjunction with EFS-Web. If this form is mailed to the USPTO, it may cause delays in reinstating the patent.**

Privacy Act Statement

The Privacy Act of 1974 (P.L. 93-579) requires that you be given certain information in connection with your submission of the attached form related to a patent application or patent. Accordingly, pursuant to the requirements of the Act, please be advised that: (1) the general authority for the collection of this information is 35 U.S.C. 2(b)(2); (2) furnishing of the information solicited is voluntary; and (3) the principal purpose for which the information is used by the U.S. Patent and Trademark Office is to process and/or examine your submission related to a patent application or patent. If you do not furnish the requested information, the U.S. Patent and Trademark Office may not be able to process and/or examine your submission, which may result in termination of proceedings or abandonment of the application or expiration of the patent.

The information provided by you in this form will be subject to the following routine uses:

1. The information on this form will be treated confidentially to the extent allowed under the Freedom of Information Act (5 U.S.C. 552) and the Privacy Act (5 U.S.C. 552a). Records from this system of records may be disclosed to the Department of Justice to determine whether the Freedom of Information Act requires disclosure of these records.

2. A record from this system of records may be disclosed, as a routine use, in the course of presenting evidence to a court, magistrate, or administrative tribunal, including disclosures to opposing counsel in the course of settlement negotiations.

3. A record in this system of records may be disclosed, as a routine use, to a Member of Congress submitting a request involving an individual, to whom the record pertains, when the individual has requested assistance from the Member with respect to the subject matter of the record.

4. A record in this system of records may be disclosed, as a routine use, to a contractor of the Agency having need for the information in order to perform a contract. Recipients of information shall be required to comply with the requirements of the Privacy Act of 1974, as amended, pursuant to 5 U.S.C. 552a(m).

5. A record related to an International Application filed under the Patent Cooperation Treaty in this system of records may be disclosed, as a routine use, to the International Bureau of the World Intellectual Property Organization, pursuant to the Patent Cooperation Treaty.

6. A record in this system of records may be disclosed, as a routine use, to another federal agency for purposes of National Security review (35 U.S.C. 181) and for review pursuant to the Atomic Energy Act (42 U.S.C. 218(c)).

7. A record from this system of records may be disclosed, as a routine use, to the Administrator, General Services, or his/her designee, during an inspection of records conducted by GSA as part of that agency's responsibility to recommend improvements in records management practices and programs, under authority of 44 U.S.C. 2904 and 2906. Such disclosure shall be made in accordance with the GSA regulations governing inspection of records for this purpose, and any other relevant (i.e., GSA or Commerce) directive. Such disclosure shall not be used to make determinations about individuals.

8. A record from this system of records may be disclosed, as a routine use, to the public after either publication of the application pursuant to 35 U.S.C. 122(b) or issuance of a patent pursuant to 35 U.S.C. 151. Further, a record may be disclosed, subject to the limitations of 37 CFR 1.14, as a routine use, to the public if the record was filed in an application which became abandoned or in which the proceedings were terminated and which application is referenced by either a published application, an application open to public inspections or an issued patent.

9. A record from this system of records may be disclosed, as a routine use, to a Federal, State, or local law enforcement agency, if the USPTO becomes aware of a violation or potential violation of law or regulation.

UNITED STATES PATENT AND TRADEMARK OFFICE

Commissioner for Patents
United States Patent and Trademark Office
P.O. Box 1450
Alexandria, VA 22313-1450
www.uspto.gov

In re Patent No. 7265439
Issue Date: September 4,2007
Application No. 09452036
Filed: November 30,1999
Attorney Docket No. LOTP0182USA

: DECISION GRANTING PETITION
: UNDER 37 CFR 1.378(c)

This is a decision on the electronic petition, filed April 12,2012 ,under 37 CFR 1.378(c) to accept the unintentionally delayed payment of the 3.5 year maintenance fee for the above-identified patent.

The petition is **GRANTED**.

The maintenance fee is accepted, and the above-identified patent reinstated as of April 12,2012 . This decision also constitutes notice that the fee has been accepted. An electronic copy of the petition and this decision has been created as an entry in the Image File Wrapper. Nevertheless, petitioner should print and retain an independent copy.

Telephone inquiries related to this electronic decision should be directed to the Electronic Business Center at 1-866-217-9197.

PTO/SB/66 (03-09)
Approved for use through 03/31/2012. OMB 0651-0016
U.S. Patent and Trademark Office: U.S. DEPARTMENT OF COMMERCE
Under the Paperwork Reduction Act of 1995, no persons are required to respond to a collection of information unless it displays valid OMB control number.

PETITION TO ACCEPT UNINTENTIONALLY DELAYED PAYMENT OF MAINTENANCE FEE IN AN EXPIRED PATENT (37 CFR 1.378(c))

Patent Number	Issue Date (YYYY-MM-DD)	Application Number	Filing Date (YYYY-MM-DD)	Docket Number (if applicable)
7265439	2007-09-04	09452036	1999-11-30	101P000389US

CAUTION: Maintenance fee (and surcharge, if any) payment must correctly identify: (1) the patent number and (2) the application number of the actual U.S. application leading to issuance of that patent to ensure the fee(s) is/are associated with the correct patent. 37 CFR 1.366(c) and (d).

SMALL ENTITY

☐ Patentee claims, or has previously claimed, small entity status. See 37 CFR 1.27.

LOSS OF ENTITLEMENT TO SMALL ENTITY STATUS

☐ Patentee is no longer entitled to small entity status. See 37 CFR 1.27(g)

NOT Small Entity			Small Entity		
	Fee	Code		Fee	Code
◉	3 ½ year	(1551)	○	3 ½ year	(2551)
○	7 ½ year	(1552)	○	7 ½ year	(2552)
○	11 ½ year	(1553)	○	11 ½ year	(2553)

SURCHARGE

The surcharge required by 37 CFR 1.20(i)(2) (Fee Code 1558) must be paid as a condition of accepting unintentionally delayed payment of the maintenance fee.

MAINTENANCE FEE (37 CFR 1.20(e)-(g))

The appropriate maintenance fee must be submitted with this petition.

STATEMENT

THE UNDERSIGNED CERTIFIES THAT THE DELAY IN PAYMENT OF THE MAINTENANCE FEE TO THIS PATENT WAS UNINTENTIONAL

PETITIONER(S) REQUEST THAT THE DELAYED PAYMENT OF THE MAINTENANCE FEE BE ACCEPTED AND THE PATENT REINSTATED

THIS PORTION MUST BE COMPLETED BY THE SIGNATORY OR SIGNATORIES

37 CFR 1.378(d) states: "Any petition under this section must be signed by an attorney or agent registered to practice before the Patent and Trademark Office, or by the patentee, the assignee, or other party in interest."

I certify, in accordance with 37 CFR 1.4(d)(4) that I am

◉ An attorney or agent registered to practice before the Patent and Trademark Office

○ A sole patentee

○ A joint patentee; I certify that I am authorized to sign this submission on behalf of all the other patentees.

○ A joint patentee; all of whom are signing this e-petition

○ The assignee of record of the entire interest

PTO/SB/66 (03-09)
Approved for use through 03/31/2012. OMB 0651-0016
U.S. Patent and Trademark Office: U.S. DEPARTMENT OF COMMERCE
Under the Paperwork Reduction Act of 1995, no persons are required to respond to a collection of information unless it displays valid OMB control number.

Patent Practitioner			
A signature of the applicant or representative is required in accordance with 37 CFR 1.33 and 10.18. Please see 37 CFR 1.4(d) for the form of the signature			
Signature	/ZHUO XU/	Date (YYYY-MM-DD)	2012-04-12
Name	ZHUO XU	Registration Number	62987

This collection of information is required by 37 CFR 1.378(c). The information is required to obtain or retain a benefit by the public which is to file (and by the USPTO to process) an application. Confidentiality is governed by 35 U.S.C. 122 and 37 CFR 1.11 and 1.14. This collection is estimated to take 1 hour to complete, including gathering, preparing, and submitting the completed application form to the USPTO. Time will vary depending upon the individual case. Any comments on the amount of time you require to complete this form and/ or suggestions for reducing this burden, should be sent to the Chief Information Officer, U.S. Patent and Trademark Office, U.S. Department of Commerce, P.O. Box 1450, Alexandria, VA 22313-1450. DO NOT SEND FEES OR COMPLETED FORMS TO THIS ADDRESS. **This form can only be used when in conjunction with EFS-Web. If this form is mailed to the USPTO, it may cause delays in reinstating the patent.**

Privacy Act Statement

The Privacy Act of 1974 (P.L. 93-579) requires that you be given certain information in connection with your submission of the attached form related to a patent application or patent. Accordingly, pursuant to the requirements of the Act, please be advised that: (1) the general authority for the collection of this information is 35 U.S.C. 2(b)(2); (2) furnishing of the information solicited is voluntary; and (3) the principal purpose for which the information is used by the U.S. Patent and Trademark Office is to process and/or examine your submission related to a patent application or patent. If you do not furnish the requested information, the U.S. Patent and Trademark Office may not be able to process and/or examine your submission, which may result in termination of proceedings or abandonment of the application or expiration of the patent.

The information provided by you in this form will be subject to the following routine uses:

1. The information on this form will be treated confidentially to the extent allowed under the Freedom of Information Act (5 U.S.C. 552) and the Privacy Act (5 U.S.C. 552a). Records from this system of records may be disclosed to the Department of Justice to determine whether the Freedom of Information Act requires disclosure of these records.

2. A record from this system of records may be disclosed, as a routine use, in the course of presenting evidence to a court, magistrate, or administrative tribunal, including disclosures to opposing counsel in the course of settlement negotiations.

3. A record in this system of records may be disclosed, as a routine use, to a Member of Congress submitting a request involving an individual, to whom the record pertains, when the individual has requested assistance from the Member with respect to the subject matter of the record.

4. A record in this system of records may be disclosed, as a routine use, to a contractor of the Agency having need for the information in order to perform a contract. Recipients of information shall be required to comply with the requirements of the Privacy Act of 1974, as amended, pursuant to 5 U.S.C. 552a(m).

5. A record related to an International Application filed under the Patent Cooperation Treaty in this system of records may be disclosed, as a routine use, to the International Bureau of the World Intellectual Property Organization, pursuant to the Patent Cooperation Treaty.

6. A record in this system of records may be disclosed, as a routine use, to another federal agency for purposes of National Security review (35 U.S.C. 181) and for review pursuant to the Atomic Energy Act (42 U.S.C. 218(c)).

7. A record from this system of records may be disclosed, as a routine use, to the Administrator, General Services, or his/her designee, during an inspection of records conducted by GSA as part of that agency's responsibility to recommend improvements in records management practices and programs, under authority of 44 U.S.C. 2904 and 2906. Such disclosure shall be made in accordance with the GSA regulations governing inspection of records for this purpose, and any other relevant (i.e., GSA or Commerce) directive. Such disclosure shall not be used to make determinations about individuals.

8. A record from this system of records may be disclosed, as a routine use, to the public after either publication of the application pursuant to 35 U.S.C. 122(b) or issuance of a patent pursuant to 35 U.S.C. 151. Further, a record may be disclosed, subject to the limitations of 37 CFR 1.14, as a routine use, to the public if the record was filed in an application which became abandoned or in which the proceedings were terminated and which application is referenced by either a published application, an application open to public inspections or an issued patent.

9. A record from this system of records may be disclosed, as a routine use, to a Federal, State, or local law enforcement agency, if the USPTO becomes aware of a violation or potential violation of law or regulation.

PTO/SB/66 (03-09)
Approved for use through 03/31/2012. OMB 0651-0016
U.S. Patent and Trademark Office: U.S. DEPARTMENT OF COMMERCE
Under the Paperwork Reduction Act of 1995, no persons are required to respond to a collection of information unless it displays valid OMB control number.

PETITION TO ACCEPT UNINTENTIONALLY DELAYED PAYMENT OF MAINTENANCE FEE IN AN EXPIRED PATENT (37 CFR 1.378(c))

Patent Number	Issue Date (YYYY-MM-DD)	Application Number	Filing Date (YYYY-MM-DD)	Docket Number (if applicable)
7,106,360	2006-09-12	09/452,952	1999-12-02	10831.0002-00000

CAUTION: Maintenance fee (and surcharge, if any) payment must correctly identify: (1) the patent number and (2) the application number of the actual U.S. application leading to issuance of that patent to ensure the fee(s) is/are associated with the correct patent. 37 CFR 1.366(c) and (d).

SMALL ENTITY

☒ Patentee claims, or has previously claimed, small entity status. See 37 CFR 1.27.

LOSS OF ENTITLEMENT TO SMALL ENTITY STATUS

☐ Patentee is no longer entitled to small entity status. See 37 CFR 1.27(g)

NOT Small Entity			Small Entity		
	Fee	Code		Fee	Code
○	3 ½ year	(1551)	◉	3 ½ year	(2551)
○	7 ½ year	(1552)	○	7 ½ year	(2552)
○	11 ½ year	(1553)	○	11 ½ year	(2553)

SURCHARGE

The surcharge required by 37 CFR 1.20(i)(2) (Fee Code 1558) must be paid as a condition of accepting unintentionally delayed payment of the maintenance fee.

MAINTENANCE FEE (37 CFR 1.20(e)-(g))

The appropriate maintenance fee must be submitted with this petition.

STATEMENT

THE UNDERSIGNED CERTIFIES THAT THE DELAY IN PAYMENT OF THE MAINTENANCE FEE TO THIS PATENT WAS UNINTENTIONAL

PETITIONER(S) REQUEST THAT THE DELAYED PAYMENT OF THE MAINTENANCE FEE BE ACCEPTED AND THE PATENT REINSTATED

THIS PORTION MUST BE COMPLETED BY THE SIGNATORY OR SIGNATORIES

37 CFR 1.378(d) states: "Any petition under this section must be signed by an attorney or agent registered to practice before the Patent and Trademark Office, or by the patentee, the assignee, or other party in interest."

I certify, in accordance with 37 CFR 1.4(d)(4) that I am

◉ An attorney or agent registered to practice before the Patent and Trademark Office

○ A sole patentee

○ A joint patentee; I certify that I am authorized to sign this submission on behalf of all the other patentees.

○ A joint patentee; all of whom are signing this e-petition

○ The assignee of record of the entire interest

PTO/SB/66 (03-09)
Approved for use through 03/31/2012. OMB 0651-0016
U.S. Patent and Trademark Office: U.S. DEPARTMENT OF COMMERCE
Under the Paperwork Reduction Act of 1995, no persons are required to respond to a collection of information unless it displays valid OMB control number.

Patent Practitioner			
A signature of the applicant or representative is required in accordance with 37 CFR 1.33 and 10.18. Please see 37 CFR 1.4(d) for the form of the signature			
Signature	/Christopher K. Agrawal/	Date (YYYY-MM-DD)	2010-11-16
Name	Christopher K. Agrawal	Registration Number	63482

This collection of information is required by 37 CFR 1.378(c). The information is required to obtain or retain a benefit by the public which is to file (and by the USPTO to process) an application. Confidentiality is governed by 35 U.S.C. 122 and 37 CFR 1.11 and 1.14. This collection is estimated to take 1 hour to complete, including gathering, preparing, and submitting the completed application form to the USPTO. Time will vary depending upon the individual case. Any comments on the amount of time you require to complete this form and/ or suggestions for reducing this burden, should be sent to the Chief Information Officer, U.S. Patent and Trademark Office, U.S. Department of Commerce, P.O. Box 1450, Alexandria, VA 22313-1450. DO NOT SEND FEES OR COMPLETED FORMS TO THIS ADDRESS. **This form can only be used when in conjunction with EFS-Web. If this form is mailed to the USPTO, it may cause delays in reinstating the patent.**

Privacy Act Statement

The Privacy Act of 1974 (P.L. 93-579) requires that you be given certain information in connection with your submission of the attached form related to a patent application or patent. Accordingly, pursuant to the requirements of the Act, please be advised that: (1) the general authority for the collection of this information is 35 U.S.C. 2(b)(2); (2) furnishing of the information solicited is voluntary; and (3) the principal purpose for which the information is used by the U.S. Patent and Trademark Office is to process and/or examine your submission related to a patent application or patent. If you do not furnish the requested information, the U.S. Patent and Trademark Office may not be able to process and/or examine your submission, which may result in termination of proceedings or abandonment of the application or expiration of the patent.

The information provided by you in this form will be subject to the following routine uses:

1. The information on this form will be treated confidentially to the extent allowed under the Freedom of Information Act (5 U.S.C. 552) and the Privacy Act (5 U.S.C. 552a). Records from this system of records may be disclosed to the Department of Justice to determine whether the Freedom of Information Act requires disclosure of these records.

2. A record from this system of records may be disclosed, as a routine use, in the course of presenting evidence to a court, magistrate, or administrative tribunal, including disclosures to opposing counsel in the course of settlement negotiations.

3. A record in this system of records may be disclosed, as a routine use, to a Member of Congress submitting a request involving an individual, to whom the record pertains, when the individual has requested assistance from the Member with respect to the subject matter of the record.

4. A record in this system of records may be disclosed, as a routine use, to a contractor of the Agency having need for the information in order to perform a contract. Recipients of information shall be required to comply with the requirements of the Privacy Act of 1974, as amended, pursuant to 5 U.S.C. 552a(m).

5. A record related to an International Application filed under the Patent Cooperation Treaty in this system of records may be disclosed, as a routine use, to the International Bureau of the World Intellectual Property Organization, pursuant to the Patent Cooperation Treaty.

6. A record in this system of records may be disclosed, as a routine use, to another federal agency for purposes of National Security review (35 U.S.C. 181) and for review pursuant to the Atomic Energy Act (42 U.S.C. 218(c)).

7. A record from this system of records may be disclosed, as a routine use, to the Administrator, General Services, or his/her designee, during an inspection of records conducted by GSA as part of that agency's responsibility to recommend improvements in records management practices and programs, under authority of 44 U.S.C. 2904 and 2906. Such disclosure shall be made in accordance with the GSA regulations governing inspection of records for this purpose, and any other relevant (i.e., GSA or Commerce) directive. Such disclosure shall not be used to make determinations about individuals.

8. A record from this system of records may be disclosed, as a routine use, to the public after either publication of the application pursuant to 35 U.S.C. 122(b) or issuance of a patent pursuant to 35 U.S.C. 151. Further, a record may be disclosed, subject to the limitations of 37 CFR 1.14, as a routine use, to the public if the record was filed in an application which became abandoned or in which the proceedings were terminated and which application is referenced by either a published application, an application open to public inspections or an issued patent.

9. A record from this system of records may be disclosed, as a routine use, to a Federal, State, or local law enforcement agency, if the USPTO becomes aware of a violation or potential violation of law or regulation.

UNITED STATES PATENT AND TRADEMARK OFFICE

Commissioner for Patents
United States Patent and Trademark Office
P.O. Box 1450
Alexandria, VA 22313-1450
www.uspto.gov

In re Patent No. 7106360
Issue Date: September 12,2006
Application No. 09452952
Filed: December 2,1999
Attorney Docket No. A-21599

:
:DECISION GRANTING PETITION
:UNDER 37 CFR 1.378(c)
:

This is a decision on the electronic petition, filed November 16,2010 ,under 37 CFR 1.378(c) to accept the unintentionally delayed payment of the 3.5 year maintenance fee for the above-identified patent.

The petition is **GRANTED**.

The maintenance fee is accepted, and the above-identified patent reinstated as of November 16,2010 . This decision also constitutes notice that the fee has been accepted. An electronic copy of the petition and this decision has been created as an entry in the Image File Wrapper. Nevertheless, petitioner should print and retain an independent copy.

Telephone inquiries related to this electronic decision should be directed to the Electronic Business Center at 1-866-217-9197.

UNITED STATES PATENT AND TRADEMARK OFFICE

Commissioner for Patents
United States Patent and Trademark Office
P.O. Box 1450
Alexandria, VA 22313-1450
www.uspto.gov

Hershkovitz & Associates, LLC
2845 Duke Street
Alexandria VA 22314

MAILED
AUG 05 2010
OFFICE OF PETITIONS

In re Application of :
Claudio R. BALLARD :
Application No. 09/454,492 : ON PETITION
Filed: December 6, 1999 :
Attorney Docket No. P43312 :

This is a decision on the petition filed March 5, 2010, under 37 CFR 1.181(a)(3) requesting that the Director exercise his supervisory authority and overturn the decision of the Director, Technology Center 3600 (Technology Center Director), dated December 15, 2009, which: (1) vacated the final Office action of July 15, 2009; (2) vacated the October 9, 2009 response to the July 15, 2009 final Office action; and (3) indicated that the application is abandoned for failure to file a timely response to the Restriction Requirement mailed January 14, 2009. The petition filed March 5, 2010 alternatively requests that the application be revived under the provisions of 37 CFR 1.137(b).

The petition to overturn the decision of the Technology Center Director dated December 15, 2009, is **GRANTED-IN-PART**.

The petition to revive the application under 37 CFR 1.137(b) is **GRANTED.**

RELEVANT BACKGROUND

On January 14, 2009, a Restriction Requirement was mailed.

On July 14, 2009, a letter was filed indicating the examiner had agreed to withdraw the January 14, 2009 Restriction Requirement and mail a new Office action.

On July 15, 2009, a final Office action was mailed.

On September 15, 2009, a petition under 37 CFR 1.181 to withdraw the finality of the July 15, 2009 Office action was filed.

On October 9, 2009, a response to the July 15, 2009 final Office action was filed.

On December 15, 2009, a decision dismissing the petition of September 15, 2009 as moot in view of the abandoned status of the application was mailed.
On March 15, 2010, a petition requesting review of the petition decision of December 15, 2009 was filed.

STATUTE, REGULATION, AND EXAMINING PROCEDURE

35 U.S.C. 133 states:

> Upon failure of the applicant to prosecute the application within six months after any action therein, of which notice has been given or mailed to the applicant, or within such shorter time, not less than thirty days, as fixed by the Director in such action, the application shall be regarded as abandoned by the parties thereto, unless it be shown to the satisfaction of the Director that such delay was unavoidable.

37 CFR 1.111 states:

> (a)(1) If the Office action after the first examination (§ 1.104) is adverse in any respect, the applicant or patent owner, if he or she persists in his or her application for a patent or reexamination proceeding, must reply and request reconsideration or further examination, with or without amendment. See §§ 1.135 and 1.136 for time for reply to avoid abandonment.

37 CFR 1.135 states:

> (a)If an applicant of a patent application fails to reply within the time period provided under § 1.134 and § 1.136, the application will become abandoned unless an Office action indicates otherwise.
> (b)Prosecution of an application to save it from abandonment pursuant to paragraph (a) of this section must include such complete and proper reply as the condition of the application may require. The admission of, or refusal to admit, any amendment after final rejection or any amendment not responsive to the last action, or any related proceedings, will not operate to save the application from abandonment.

37 CFR 1.143 states:

> If the applicant disagrees with the requirement for restriction, he may request reconsideration and withdrawal or modification of the requirement, giving the reasons therefor. (See § 1.111). In requesting reconsideration the applicant must indicate a provisional election of one invention for prosecution, which invention shall be the one elected in the event the requirement becomes final. The requirement for restriction will be reconsidered on such a request. If the requirement is repeated and made final, the examiner will at the same time act on the claims to the invention elected.

37 CFR 1.181(f) states:

> The mere filing of a petition will not stay any period for reply that may be running against the application, nor act as a stay of other proceedings. Any petition under this part not filed within two months of the mailing date of the action or notice from which relief is requested may be dismissed as untimely, except as otherwise provided. This two-month period is not extendable.

MPEP 502.03(II) states:

> Where a written authorization is given by the applicant, communications via Internet e-mail, other than those under 35 U.S.C. 132 or which otherwise require a signature, may be used. In such case, a printed copy of the Internet e-mail communications MUST be given a paper number, entered into the Patent Application Locating and Monitoring System (PALM) and entered in the patent application file. A reply to an Office action may NOT be communicated by applicant to the USPTO via Internet e-mail. If such a reply is submitted by applicant via Internet e-mail, a paper copy will be placed in the appropriate patent application file with an indication that the reply is NOT ENTERED.

MPEP 711.03(a) states:

> Applicant may deny that the reply was incomplete.
> While the primary examiner has no authority to act upon an application in which no action by applicant was taken during the period for reply, he or she may reverse his or her holding as to whether or not an amendment received during such period was responsive and act on an application of such character which he or she has previously held abandoned. This is not a revival of an abandoned application but merely a holding that the application was never abandoned. See also MPEP § 714.03.

MPEP 818.03(a) states:

> As shown by the first sentence of 37 CFR 1.143, the traverse to a requirement must be complete as required by 37 CFR 1.111(b) which reads in part: "In order to be entitled to reconsideration or further examination, the applicant or patent owner must reply to the Office action. The reply by the applicant or patent owner must be reduced to a writing which distinctly and specifically points out the supposed errors in the examiner's action and must reply to every ground of objection and rejection in the prior Office action. . . . The applicant's or patent owner's reply must appear throughout to be a bona fide attempt to advance the application or the reexamination proceeding to final action. . . ."
> Under this rule, the applicant is required to specifically point out the reasons on which he or she bases his or her conclusions that a requirement to restrict is in error. A mere broad allegation that the requirement is in error does not comply with the requirement of 37 CFR § 1.111. Thus the required provisional election (see MPEP § 818.03(b)) becomes an election without traverse.

OPINION

With respect to the petition under 37 CFR 1.181

Petitioner specifically requests that the Director overturn the Technology Center Director's decision of December 15, 2009 and: (1) withdraw the holding of abandonment; (2) reinstate the July 15, 2009 Office action and accept the amendment filed October 9, 2009; and (3) direct the Technology Center Director to treat the September 15, 2009 petition.

This application was held abandoned for failure to timely file a proper reply on or before February 14, 2009, in response to the Restriction Requirement mailed January 14, 2009. A Notice of Abandonment was mailed on December 31, 2009.

Petitioner states: (1) a proper reply was timely filed, or in any event, (2) a proper reply to the outstanding restriction requirement was timely filed as evidenced by (a) the USPTO's own actions or inactions in this case, and (b) the documents already of record in this case, and (3) the [Technology Center Director's] Decision has improperly refused to accord any evidentiary force and effect to the e-mails issued by the PTO and Applicant. Petitioner specifically argues: (1) the restriction requirement had been repudiated, in writing, by two PTO officials through e-mail and implies that no other reply could have been prepared in this instance as the "complete and proper reply" was the e-mail correspondence; (2) the Examiner and SPE have authority to withdraw an action or requirement they themselves have issued and that the e-mail communication was in fact a timely withdrawal of the requirement; and (3) the examiner has the authority to withdraw the holding of abandonment in accordance with MPEP 711.03(a). However, a review of the record confirms that a proper reply was not timely filed on or before February 14, 2009.

While the USPTO does have an Electronic Office Action (e-Office Action) program (in which applicant has elected to participate), this should not be confused the Patent Internet Usage Policy of the USPTO which covers e-mail communications between applicant and the Office. The e-Office Action program is used to notify applicant by e-mail that an Office communication is retrievable through Private Patent Application Information Retrieval (PAIR) in lieu of paper mailings of the communication. As set forth in Item 14 of the USPTO's Electronic Office Action Policy at 1343 *Off. Gaz. Pat. Office* 49 (June 2, 2009):

> 14. Does the e-Office Action change the policy for communications via the Internet?
>
> By registering for the e-Office Action program, participant is authorizing the Office to send e-mail notifications of Office communications entered by the participating Office business units in the applications associated with the Customer Number. The e-Office Action program does not, otherwise, change the policy for communications via the Internet set forth in the Manual of Patent Examining Procedure (MPEP) § 502.03.
>
> The e-Office Action program does not alter the Office policy prohibiting an applicant or examiner from engaging in improper e-mail correspondence. **For example, applicant**

> **may not send a reply to an Office action to the Office via e-mail, and the examiner may not send an Office action to the applicant via e-mail. See MPEP § 502.03.** [Emphasis added]

It is clear from the USPTO's Electronic Office Action Policy that the USPTO does not permit Office actions or replies thereto to be sent via e-mail. Accordingly, the e-mail correspondence is not a complete and proper reply to the Restriction Requirement of January 14, 2009 or a timely response within the shortened statutory period for response (or any extended time period) set forth in the Restriction Requirement of January 14, 2009, nor is the e-mail communication from the examiner a timely withdrawal of the Restriction Requirement of January 14, 2009. Thus, applicant did not respond to the Restriction Requirement of January 14, 2009 nor did the USPTO withdraw or replace the requirement within the six-month period provided in 35 U.S.C. 133.

Furthermore, MPEP 502.03(II) and Article 5 of the Patent Internet Usage Policy of the USPTO at 64 FR 33060 (June 21, 1999) state:

> Where a written, authorization is given by the applicant, communications via Internet e-mail, other than those under 35 U.S.C. 132 or which otherwise require a signature, may be used.

Therefore, as a signature is required to respond to an Office action, neither the USPTO's e-Office Action program nor the USPTO's Internet communication policy permit replies to an Office action by e-mail. Firstly, as set forth above, the e-mail communications do not meet the response requirements of 37 CFR 1.111, 37 CFR 1.143, and MPEP 818.03(a). Additionally, as a signature is required to withdraw an Office action or requirement and the e-mail communications are unsigned, the e-mail communications are not official communications from the Office and may not be used effect withdrawal of the Restriction Requirement of January 14, 2009. In any event, a review of the unofficial e-mail communications indicates that they do not purport to affect a withdrawal of the Restriction Requirement of January 14, 2009, but that they simply advise the applicant that the examiner intends to withdraw the Restriction Requirement of January 14, 2009. There is no comment, official or unofficial that actually purports to withdraw the Restriction Requirement of January 14, 2009 within the period for reply to the Restriction Requirement of January 14, 2009. The only inference that may be gleaned from the e-mails is that the examiner planned to withdraw the requirement at some future time, however, the examiner never withdrew the requirement within the time for doing so (*i.e.*, within the six-month period provided in 35 U.S.C. 133).

Additionally, MPEP 502.03(II) and Article 5 of the Patent Internet Usage Policy of the USPTO at 64 FR 33060 (June 21, 1999) state:

> A reply to an Office action may **NOT** be communicated by applicant to the PTO via Internet e-mail. If such a reply is submitted by applicant via Internet e-mail, a paper copy will be placed in the appropriate patent application file with an indication that the reply is **NOT ENTERED**.

Accordingly, the e-mail communications relied upon by petitioner is not a timely complete and proper reply to the Restriction Requirement of January 14, 2009. Additionally, the examiner's e-mail response to petitioner's e-mail is not a timely withdrawal of the requirement. As set forth in 35 U.S.C. 133 upon failure of the applicant to prosecute the application within six months after any action therein, of which notice has been given or mailed to the applicant, or within such shorter time, not less than thirty days, as fixed by the Director in such action, the application shall be regarded as abandoned by the parties thereto, unless it be shown to the satisfaction of the Director that such delay was unavoidable.

In any event, a proper reply to the Restriction Requirement of January 14, 2009 must have been reduced in writing and specifically point out the reasons on which he or she bases his or her conclusions that a requirement to restrict is in error. A mere broad allegation that the requirement is in error does not comply with the requirement of 37 CFR 1.111. See 37 CFR 1.143; MPEP 818.03(a), *supra*. As the e-mail communications do not comply with the requirements of 37 CFR 1.111, 37 CFR 1.143 and MPEP 818.03(a), they are not a proper response to the Restriction Requirement.

Additionally, while petitioner argues that MPEP 711.03(a) permits the examiner to withdraw the holding of abandonment, that is not the case. MPEP 711.03(a) permits an examiner to reverse his or her holding as to whether or not an amendment received during the period for reply was responsive and act on an application of such character which he or she has previously held abandoned, *i.e.*, hold that the application was never abandoned. In this case no reply was received during the period for reply. Therefore, the examiner had no authority to act on the application after July 14, 2009.

For the reasons set forth above, petitioner's request to withdraw the holding of abandonment is **denied**.

With respect to the petition under 37 CFR 1.137(b)

Petitioner's request to revive the above-identified application under the provisions of 37 CFR 1.137(b) is **granted**.

This decision hereby ratifies the prosecution of the instant application which occurred between February 15, 2009 and the mailing date of this decision. Accordingly, the Office action mailed July 15, 2009 is reinstated and the response filed October 9, 2009 is accepted.

The application file is being forwarded to Technology Center 3600 for treatment on the merits of the petition filed September 15, 2009.

DECISION

A review of the record indicates that the Technology Center Director did not abuse his discretion or act in an arbitrary and capricious manner in the petition decision of December 15, 2009. The record establishes that the Technology Center Director had a reasonable basis to support his findings and conclusion.

The petition is granted to the extent that the decision of the Technology Center Director of December 15, 2009 has been reviewed, but is denied with respect to withdrawing the holding of abandonment.

Telephone inquiries concerning this decision should be directed to David A. Bucci at (571) 272-7099

Robert W. Bahr
Acting Associate Commissioner
For Patent Examination Policy

PTO/SB/66 (03-09)
Approved for use through 03/31/2012. OMB 0651-0016
U.S. Patent and Trademark Office: U.S. DEPARTMENT OF COMMERCE
Under the Paperwork Reduction Act of 1995, no persons are required to respond to a collection of information unless it displays valid OMB control number.

PETITION TO ACCEPT UNINTENTIONALLY DELAYED PAYMENT OF MAINTENANCE FEE IN AN EXPIRED PATENT (37 CFR 1.378(c))

Patent Number	Issue Date (YYYY-MM-DD)	Application Number	Filing Date (YYYY-MM-DD)	Docket Number (if applicable)
7158941	2007-01-02	09454770	1999-12-03	00429/808000-000

CAUTION: Maintenance fee (and surcharge, if any) payment must correctly identify: (1) the patent number and (2) the application number of the actual U.S. application leading to issuance of that patent to ensure the fee(s) is/are associated with the correct patent. 37 CFR 1.366(c) and (d).

SMALL ENTITY

☒ Patentee claims, or has previously claimed, small entity status. See 37 CFR 1.27.

LOSS OF ENTITLEMENT TO SMALL ENTITY STATUS

☐ Patentee is no longer entitled to small entity status. See 37 CFR 1.27(g)

NOT Small Entity			Small Entity		
	Fee	Code		Fee	Code
○	3 ½ year	(1551)	◉	3 ½ year	(2551)
○	7 ½ year	(1552)	○	7 ½ year	(2552)
○	11 ½ year	(1553)	○	11 ½ year	(2553)

SURCHARGE

The surcharge required by 37 CFR 1.20(i)(2) (Fee Code 1558) must be paid as a condition of accepting unintentionally delayed payment of the maintenance fee.

MAINTENANCE FEE (37 CFR 1.20(e)-(g))

The appropriate maintenance fee must be submitted with this petition.

STATEMENT

THE UNDERSIGNED CERTIFIES THAT THE DELAY IN PAYMENT OF THE MAINTENANCE FEE TO THIS PATENT WAS UNINTENTIONAL

PETITIONER(S) REQUEST THAT THE DELAYED PAYMENT OF THE MAINTENANCE FEE BE ACCEPTED AND THE PATENT REINSTATED

THIS PORTION MUST BE COMPLETED BY THE SIGNATORY OR SIGNATORIES

37 CFR 1.378(d) states: "Any petition under this section must be signed by an attorney or agent registered to practice before the Patent and Trademark Office, or by the patentee, the assignee, or other party in interest."

I certify, in accordance with 37 CFR 1.4(d)(4) that I am

◉ An attorney or agent registered to practice before the Patent and Trademark Office

○ A sole patentee

○ A joint patentee; I certify that I am authorized to sign this submission on behalf of all the other patentees.

○ A joint patentee; all of whom are signing this e-petition

○ The assignee of record of the entire interest

PTO/SB/66 (03-09)
Approved for use through 03/31/2012. OMB 0651-0016
U.S. Patent and Trademark Office: U.S. DEPARTMENT OF COMMERCE
Under the Paperwork Reduction Act of 1995, no persons are required to respond to a collection of information unless it displays valid OMB control number.

Patent Practitioner			
A signature of the applicant or representative is required in accordance with 37 CFR 1.33 and 10.18. Please see 37 CFR 1.4(d) for the form of the signature			
Signature	/david leason/	Date (YYYY-MM-DD)	2012-03-29
Name	David Leason	Registration Number	36195

This collection of information is required by 37 CFR 1.378(c). The information is required to obtain or retain a benefit by the public which is to file (and by the USPTO to process) an application. Confidentiality is governed by 35 U.S.C. 122 and 37 CFR 1.11 and 1.14. This collection is estimated to take 1 hour to complete, including gathering, preparing, and submitting the completed application form to the USPTO. Time will vary depending upon the individual case. Any comments on the amount of time you require to complete this form and/ or suggestions for reducing this burden, should be sent to the Chief Information Officer, U.S. Patent and Trademark Office, U.S. Department of Commerce, P.O. Box 1450, Alexandria, VA 22313-1450. DO NOT SEND FEES OR COMPLETED FORMS TO THIS ADDRESS. **This form can only be used when in conjunction with EFS-Web. If this form is mailed to the USPTO, it may cause delays in reinstating the patent.**

Privacy Act Statement

The Privacy Act of 1974 (P.L. 93-579) requires that you be given certain information in connection with your submission of the attached form related to a patent application or patent. Accordingly, pursuant to the requirements of the Act, please be advised that: (1) the general authority for the collection of this information is 35 U.S.C. 2(b)(2); (2) furnishing of the information solicited is voluntary; and (3) the principal purpose for which the information is used by the U.S. Patent and Trademark Office is to process and/or examine your submission related to a patent application or patent. If you do not furnish the requested information, the U.S. Patent and Trademark Office may not be able to process and/or examine your submission, which may result in termination of proceedings or abandonment of the application or expiration of the patent.

The information provided by you in this form will be subject to the following routine uses:

1. The information on this form will be treated confidentially to the extent allowed under the Freedom of Information Act (5 U.S.C. 552) and the Privacy Act (5 U.S.C. 552a). Records from this system of records may be disclosed to the Department of Justice to determine whether the Freedom of Information Act requires disclosure of these records.

2. A record from this system of records may be disclosed, as a routine use, in the course of presenting evidence to a court, magistrate, or administrative tribunal, including disclosures to opposing counsel in the course of settlement negotiations.

3. A record in this system of records may be disclosed, as a routine use, to a Member of Congress submitting a request involving an individual, to whom the record pertains, when the individual has requested assistance from the Member with respect to the subject matter of the record.

4. A record in this system of records may be disclosed, as a routine use, to a contractor of the Agency having need for the information in order to perform a contract. Recipients of information shall be required to comply with the requirements of the Privacy Act of 1974, as amended, pursuant to 5 U.S.C. 552a(m).

5. A record related to an International Application filed under the Patent Cooperation Treaty in this system of records may be disclosed, as a routine use, to the International Bureau of the World Intellectual Property Organization, pursuant to the Patent Cooperation Treaty.

6. A record in this system of records may be disclosed, as a routine use, to another federal agency for purposes of National Security review (35 U.S.C. 181) and for review pursuant to the Atomic Energy Act (42 U.S.C. 218(c)).

7. A record from this system of records may be disclosed, as a routine use, to the Administrator, General Services, or his/her designee, during an inspection of records conducted by GSA as part of that agency's responsibility to recommend improvements in records management practices and programs, under authority of 44 U.S.C. 2904 and 2906. Such disclosure shall be made in accordance with the GSA regulations governing inspection of records for this purpose, and any other relevant (i.e., GSA or Commerce) directive. Such disclosure shall not be used to make determinations about individuals.

8. A record from this system of records may be disclosed, as a routine use, to the public after either publication of the application pursuant to 35 U.S.C. 122(b) or issuance of a patent pursuant to 35 U.S.C. 151. Further, a record may be disclosed, subject to the limitations of 37 CFR 1.14, as a routine use, to the public if the record was filed in an application which became abandoned or in which the proceedings were terminated and which application is referenced by either a published application, an application open to public inspections or an issued patent.

9. A record from this system of records may be disclosed, as a routine use, to a Federal, State, or local law enforcement agency, if the USPTO becomes aware of a violation or potential violation of law or regulation.

UNITED STATES PATENT AND TRADEMARK OFFICE

Commissioner for Patents
United States Patent and Trademark Office
P.O. Box 1450
Alexandria, VA 22313-1450
www.uspto.gov

In re Patent No. 7158941
Issue Date: January 2,2007
Application No. 09454770
Filed: December 3,1999
Attorney Docket No. 2849/0G277

:
:DECISION GRANTING PETITION
:UNDER 37 CFR 1.378(c)
:

This is a decision on the electronic petition, filed March 29,2012 ,under 37 CFR 1.378(c) to accept the unintentionally delayed payment of the 3.5 year maintenance fee for the above-identified patent.

The petition is **GRANTED**.

The maintenance fee is accepted, and the above-identified patent reinstated as of March 29,2012 . This decision also constitutes notice that the fee has been accepted. An electronic copy of the petition and this decision has been created as an entry in the Image File Wrapper. Nevertheless, petitioner should print and retain an independent copy.

Telephone inquiries related to this electronic decision should be directed to the Electronic Business Center at 1-866-217-9197.

UNITED STATES PATENT AND TRADEMARK OFFICE

Commissioner for Patents
United States Patent and Trademark Office
P.O. Box 1450
Alexandria, VA 22313-1450
www.uspto.gov

MAILED

APR 11 2011

OFFICE OF PETITIONS

MICROSOFT CORPORATION
ONE MICROSOFT WAY
REDMOND WA 98052

In re Patent No. 6,460,028	:	
Issue Date: October 1, 2002	:	
Application No. 09/454,977	:	NOTICE
Filed: December 3, 1999	:	
Attorney Docket No. 73877/94796	:	

This is a notice regarding your request for acceptance of a fee deficiency submission under 37 CFR 1.28. On September 1, 1998, the Court of Appeals for the Federal Circuit held that 37 CFR 1.28(c) is the sole provision governing the time for correction of the erroneous payment of the issue fee as a small entity. **See DH Technology v. Synergystex International, Inc. 154 F.3d 1333, 47 USPQ2d 1865 (Fed. Cir. Sept. 1, 1998).**

The Office no longer investigates or rejects original or reissue applications under 37 CFR 1.56. **1098 Off. Gaz. Pat. Office 502 (January 3, 1989)**. Therefore, nothing in this Notice is intended to imply that an investigation was done.

Your fee deficiency submission under 37 CFR 1.28 is hereby **ACCEPTED**.

This application is no longer entitled to small entity status. Accordingly, all future fees paid in this application must be paid at the large entity rate.

Inquiries related to this communication should be directed to Diane Goodwyn at (571) 272-6735.

Thurman K. Page
Petitions Examiner
Office of Petitions

UNITED STATES PATENT AND TRADEMARK OFFICE

UNITED STATES DEPARTMENT OF COMMERCE
United States Patent and Trademark Office
Address: COMMISSIONER FOR PATENTS
P.O. Box 1450
Alexandria, Virginia 22313-1450
www.uspto.gov

APPLICATION NUMBER	FILING OR 371(C) DATE	FIRST NAMED APPLICANT	ATTY. DOCKET NO./TITLE
09/454,977	12/03/1999	ROBB B PENOYER	73877/94796

CONFIRMATION NO. 4486

22971
MICROSOFT CORPORATION
ONE MICROSOFT WAY
REDMOND, WA 98052-6399

POA ACCEPTANCE LETTER

OC000000046952119

Date Mailed: 04/05/2011

NOTICE OF ACCEPTANCE OF POWER OF ATTORNEY

This is in response to the Power of Attorney filed 02/17/2011.

The Power of Attorney in this application is accepted. Correspondence in this application will be mailed to the above address as provided by 37 CFR 1.33.

/dcgoodwyn/

Office of Data Management, Application Assistance Unit (571) 272-4000, or (571) 272-4200, or 1-888-786-0101

UNITED STATES PATENT AND TRADEMARK OFFICE

UNITED STATES DEPARTMENT OF COMMERCE
United States Patent and Trademark Office
Address: COMMISSIONER FOR PATENTS
P.O. Box 1450
Alexandria, Virginia 22313-1450
www.uspto.gov

APPLICATION NUMBER	FILING OR 371(C) DATE	FIRST NAMED APPLICANT	ATTY. DOCKET NO./TITLE
09/454,977	12/03/1999	ROBB B PENOYER	73877/94796

CONFIRMATION NO. 4486

POWER OF ATTORNEY NOTICE

23380
TUCKER ELLIS & WEST LLP
1150 HUNTINGTON BUILDING
925 EUCLID AVENUE
CLEVELAND, OH 44115-1414

Date Mailed: 04/05/2011

NOTICE REGARDING CHANGE OF POWER OF ATTORNEY

This is in response to the Power of Attorney filed 02/17/2011.

- The Power of Attorney to you in this application has been revoked by the assignee who has intervened as provided by 37 CFR 3.71. Future correspondence will be mailed to the new address of record(37 CFR 1.33).

/dcgoodwyn/

Office of Data Management, Application Assistance Unit (571) 272-4000, or (571) 272-4200, or 1-888-786-0101

UNITED STATES PATENT AND TRADEMARK OFFICE

Commissioner for Patents
United States Patent and Trademark Office
P.O. Box 1450
Alexandria, VA 22313-1450
www.uspto.gov

In re Patent No. 6544148
Issue Date: April 8,2003
Application No. 09455382
Filed: December 6,1999
Attorney Docket No.

:
:DECISION GRANTING PETITION
:UNDER 37 CFR 1.378(c)
:

This is a decision on the electronic petition, filed August 10,2011 ,under 37 CFR 1.378(c) to accept the unintentionally delayed payment of the 7.5 year maintenance fee for the above-identified patent.

The petition is **GRANTED**.

The maintenance fee is accepted, and the above-identified patent reinstated as of August 10,2011 . This decision also constitutes notice that the fee has been accepted. An electronic copy of the petition and this decision has been created as an entry in the Image File Wrapper. Nevertheless, petitioner should print and retain an independent copy.

Telephone inquiries related to this electronic decision should be directed to the Electronic Business Center at 1-866-217-9197.

PTO/SB/66 (03-09)
Approved for use through 03/31/2012. OMB 0651-0016
U.S. Patent and Trademark Office: U.S. DEPARTMENT OF COMMERCE
Under the Paperwork Reduction Act of 1995, no persons are required to respond to a collection of information unless it displays valid OMB control number.

PETITION TO ACCEPT UNINTENTIONALLY DELAYED PAYMENT OF MAINTENANCE FEE IN AN EXPIRED PATENT (37 CFR 1.378(c))

Patent Number	Issue Date (YYYY-MM-DD)	Application Number	Filing Date (YYYY-MM-DD)	Docket Number (if applicable)
6,544,148	2003-04-08	09/455,382	1999-12-06	14012-7

CAUTION: Maintenance fee (and surcharge, if any) payment must correctly identify: (1) the patent number and (2) the application number of the actual U.S. application leading to issuance of that patent to ensure the fee(s) is/are associated with the correct patent. 37 CFR 1.366(c) and (d).

SMALL ENTITY

☒ Patentee claims, or has previously claimed, small entity status. See 37 CFR 1.27.

LOSS OF ENTITLEMENT TO SMALL ENTITY STATUS

☐ Patentee is no longer entitled to small entity status. See 37 CFR 1.27(g)

NOT Small Entity	Fee	Code	Small Entity	Fee	Code
○	3 ½ year	(1551)	○	3 ½ year	(2551)
○	7 ½ year	(1552)	◉	7 ½ year	(2552)
○	11 ½ year	(1553)	○	11 ½ year	(2553)

SURCHARGE

The surcharge required by 37 CFR 1.20(i)(2) (Fee Code 1558) must be paid as a condition of accepting unintentionally delayed payment of the maintenance fee.

MAINTENANCE FEE (37 CFR 1.20(e)-(g))

The appropriate maintenance fee must be submitted with this petition.

STATEMENT

THE UNDERSIGNED CERTIFIES THAT THE DELAY IN PAYMENT OF THE MAINTENANCE FEE TO THIS PATENT WAS UNINTENTIONAL

PETITIONER(S) REQUEST THAT THE DELAYED PAYMENT OF THE MAINTENANCE FEE BE ACCEPTED AND THE PATENT REINSTATED

THIS PORTION MUST BE COMPLETED BY THE SIGNATORY OR SIGNATORIES

37 CFR 1.378(d) states: "Any petition under this section must be signed by an attorney or agent registered to practice before the Patent and Trademark Office, or by the patentee, the assignee, or other party in interest."

I certify, in accordance with 37 CFR 1.4(d)(4) that I am

◉ An attorney or agent registered to practice before the Patent and Trademark Office

○ A sole patentee

○ A joint patentee; I certify that I am authorized to sign this submission on behalf of all the other patentees.

○ A joint patentee; all of whom are signing this e-petition

○ The assignee of record of the entire interest

PTO/SB/66 (03-09)
Approved for use through 03/31/2012. OMB 0651-0016
U.S. Patent and Trademark Office: U.S. DEPARTMENT OF COMMERCE
Under the Paperwork Reduction Act of 1995, no persons are required to respond to a collection of information unless it displays valid OMB control number.

Patent Practitioner			
A signature of the applicant or representative is required in accordance with 37 CFR 1.33 and 10.18. Please see 37 CFR 1.4(d) for the form of the signature			
Signature	/Marc V. Richards/	Date (YYYY-MM-DD)	2011-08-10
Name	Marc V. Richards	Registration Number	37921

This collection of information is required by 37 CFR 1.378(c). The information is required to obtain or retain a benefit by the public which is to file (and by the USPTO to process) an application. Confidentiality is governed by 35 U.S.C. 122 and 37 CFR 1.11 and 1.14. This collection is estimated to take 1 hour to complete, including gathering, preparing, and submitting the completed application form to the USPTO. Time will vary depending upon the individual case. Any comments on the amount of time you require to complete this form and/ or suggestions for reducing this burden, should be sent to the Chief Information Officer, U.S. Patent and Trademark Office, U.S. Department of Commerce, P.O. Box 1450, Alexandria, VA 22313-1450. DO NOT SEND FEES OR COMPLETED FORMS TO THIS ADDRESS. **This form can only be used when in conjunction with EFS-Web. If this form is mailed to the USPTO, it may cause delays in reinstating the patent.**

Privacy Act Statement

The Privacy Act of 1974 (P.L. 93-579) requires that you be given certain information in connection with your submission of the attached form related to a patent application or patent. Accordingly, pursuant to the requirements of the Act, please be advised that: (1) the general authority for the collection of this information is 35 U.S.C. 2(b)(2); (2) furnishing of the information solicited is voluntary; and (3) the principal purpose for which the information is used by the U.S. Patent and Trademark Office is to process and/or examine your submission related to a patent application or patent. If you do not furnish the requested information, the U.S. Patent and Trademark Office may not be able to process and/or examine your submission, which may result in termination of proceedings or abandonment of the application or expiration of the patent.

The information provided by you in this form will be subject to the following routine uses:

1. The information on this form will be treated confidentially to the extent allowed under the Freedom of Information Act (5 U.S.C. 552) and the Privacy Act (5 U.S.C. 552a). Records from this system of records may be disclosed to the Department of Justice to determine whether the Freedom of Information Act requires disclosure of these records.

2. A record from this system of records may be disclosed, as a routine use, in the course of presenting evidence to a court, magistrate, or administrative tribunal, including disclosures to opposing counsel in the course of settlement negotiations.

3. A record in this system of records may be disclosed, as a routine use, to a Member of Congress submitting a request involving an individual, to whom the record pertains, when the individual has requested assistance from the Member with respect to the subject matter of the record.

4. A record in this system of records may be disclosed, as a routine use, to a contractor of the Agency having need for the information in order to perform a contract. Recipients of information shall be required to comply with the requirements of the Privacy Act of 1974, as amended, pursuant to 5 U.S.C. 552a(m).

5. A record related to an International Application filed under the Patent Cooperation Treaty in this system of records may be disclosed, as a routine use, to the International Bureau of the World Intellectual Property Organization, pursuant to the Patent Cooperation Treaty.

6. A record in this system of records may be disclosed, as a routine use, to another federal agency for purposes of National Security review (35 U.S.C. 181) and for review pursuant to the Atomic Energy Act (42 U.S.C. 218(c)).

7. A record from this system of records may be disclosed, as a routine use, to the Administrator, General Services, or his/her designee, during an inspection of records conducted by GSA as part of that agency's responsibility to recommend improvements in records management practices and programs, under authority of 44 U.S.C. 2904 and 2906. Such disclosure shall be made in accordance with the GSA regulations governing inspection of records for this purpose, and any other relevant (i.e., GSA or Commerce) directive. Such disclosure shall not be used to make determinations about individuals.

8. A record from this system of records may be disclosed, as a routine use, to the public after either publication of the application pursuant to 35 U.S.C. 122(b) or issuance of a patent pursuant to 35 U.S.C. 151. Further, a record may be disclosed, subject to the limitations of 37 CFR 1.14, as a routine use, to the public if the record was filed in an application which became abandoned or in which the proceedings were terminated and which application is referenced by either a published application, an application open to public inspections or an issued patent.

9. A record from this system of records may be disclosed, as a routine use, to a Federal, State, or local law enforcement agency, if the USPTO becomes aware of a violation or potential violation of law or regulation.

PTO/SB/66 (03-09)
Approved for use through 03/31/2012. OMB 0651-0016
U.S. Patent and Trademark Office: U.S. DEPARTMENT OF COMMERCE
Under the Paperwork Reduction Act of 1995, no persons are required to respond to a collection of information unless it displays valid OMB control number.

PETITION TO ACCEPT UNINTENTIONALLY DELAYED PAYMENT OF MAINTENANCE FEE IN AN EXPIRED PATENT (37 CFR 1.378(c))

Patent Number	Issue Date (YYYY-MM-DD)	Application Number	Filing Date (YYYY-MM-DD)	Docket Number (if applicable)
6486750	2002-11-26	09457980	1999-12-09	4211-00003

CAUTION: Maintenance fee (and surcharge, if any) payment must correctly identify: (1) the patent number and (2) the application number of the actual U.S. application leading to issuance of that patent to ensure the fee(s) is/are associated with the correct patent. 37 CFR 1.366(c) and (d).

SMALL ENTITY

☒ Patentee claims, or has previously claimed, small entity status. See 37 CFR 1.27.

LOSS OF ENTITLEMENT TO SMALL ENTITY STATUS

☐ Patentee is no longer entitled to small entity status. See 37 CFR 1.27(g)

NOT Small Entity			Small Entity		
	Fee	Code		Fee	Code
○	3 ½ year	(1551)	○	3 ½ year	(2551)
○	7 ½ year	(1552)	◉	7 ½ year	(2552)
○	11 ½ year	(1553)	○	11 ½ year	(2553)

SURCHARGE

The surcharge required by 37 CFR 1.20(i)(2) (Fee Code 1558) must be paid as a condition of accepting unintentionally delayed payment of the maintenance fee.

MAINTENANCE FEE (37 CFR 1.20(e)-(g))

The appropriate maintenance fee must be submitted with this petition.

STATEMENT

THE UNDERSIGNED CERTIFIES THAT THE DELAY IN PAYMENT OF THE MAINTENANCE FEE TO THIS PATENT WAS UNINTENTIONAL

PETITIONER(S) REQUEST THAT THE DELAYED PAYMENT OF THE MAINTENANCE FEE BE ACCEPTED AND THE PATENT REINSTATED

THIS PORTION MUST BE COMPLETED BY THE SIGNATORY OR SIGNATORIES

37 CFR 1.378(d) states: "Any petition under this section must be signed by an attorney or agent registered to practice before the Patent and Trademark Office, or by the patentee, the assignee, or other party in interest."

I certify, in accordance with 37 CFR 1.4(d)(4) that I am

◉ An attorney or agent registered to practice before the Patent and Trademark Office

○ A sole patentee

○ A joint patentee; I certify that I am authorized to sign this submission on behalf of all the other patentees.

○ A joint patentee; all of whom are signing this e-petition

○ The assignee of record of the entire interest

PTO/SB/66 (03-09)
Approved for use through 03/31/2012. OMB 0651-0016
U.S. Patent and Trademark Office: U.S. DEPARTMENT OF COMMERCE
Under the Paperwork Reduction Act of 1995, no persons are required to respond to a collection of information unless it displays valid OMB control number.

Patent Practitioner			
A signature of the applicant or representative is required in accordance with 37 CFR 1.33 and 10.18. Please see 37 CFR 1.4(d) for the form of the signature			
Signature	/Joseph J. Jochman/	Date (YYYY-MM-DD)	2011-03-01
Name	Joseph J. Jochman	Registration Number	25058

This collection of information is required by 37 CFR 1.378(c). The information is required to obtain or retain a benefit by the public which is to file (and by the USPTO to process) an application. Confidentiality is governed by 35 U.S.C. 122 and 37 CFR 1.11 and 1.14. This collection is estimated to take 1 hour to complete, including gathering, preparing, and submitting the completed application form to the USPTO. Time will vary depending upon the individual case. Any comments on the amount of time you require to complete this form and/ or suggestions for reducing this burden, should be sent to the Chief Information Officer, U.S. Patent and Trademark Office, U.S. Department of Commerce, P.O. Box 1450, Alexandria, VA 22313-1450. DO NOT SEND FEES OR COMPLETED FORMS TO THIS ADDRESS. **This form can only be used when in conjunction with EFS-Web. If this form is mailed to the USPTO, it may cause delays in reinstating the patent.**

Privacy Act Statement

The Privacy Act of 1974 (P.L. 93-579) requires that you be given certain information in connection with your submission of the attached form related to a patent application or patent. Accordingly, pursuant to the requirements of the Act, please be advised that: (1) the general authority for the collection of this information is 35 U.S.C. 2(b)(2); (2) furnishing of the information solicited is voluntary; and (3) the principal purpose for which the information is used by the U.S. Patent and Trademark Office is to process and/or examine your submission related to a patent application or patent. If you do not furnish the requested information, the U.S. Patent and Trademark Office may not be able to process and/or examine your submission, which may result in termination of proceedings or abandonment of the application or expiration of the patent.

The information provided by you in this form will be subject to the following routine uses:

1. The information on this form will be treated confidentially to the extent allowed under the Freedom of Information Act (5 U.S.C. 552) and the Privacy Act (5 U.S.C. 552a). Records from this system of records may be disclosed to the Department of Justice to determine whether the Freedom of Information Act requires disclosure of these records.

2. A record from this system of records may be disclosed, as a routine use, in the course of presenting evidence to a court, magistrate, or administrative tribunal, including disclosures to opposing counsel in the course of settlement negotiations.

3. A record in this system of records may be disclosed, as a routine use, to a Member of Congress submitting a request involving an individual, to whom the record pertains, when the individual has requested assistance from the Member with respect to the subject matter of the record.

4. A record in this system of records may be disclosed, as a routine use, to a contractor of the Agency having need for the information in order to perform a contract. Recipients of information shall be required to comply with the requirements of the Privacy Act of 1974, as amended, pursuant to 5 U.S.C. 552a(m).

5. A record related to an International Application filed under the Patent Cooperation Treaty in this system of records may be disclosed, as a routine use, to the International Bureau of the World Intellectual Property Organization, pursuant to the Patent Cooperation Treaty.

6. A record in this system of records may be disclosed, as a routine use, to another federal agency for purposes of National Security review (35 U.S.C. 181) and for review pursuant to the Atomic Energy Act (42 U.S.C. 218(c)).

7. A record from this system of records may be disclosed, as a routine use, to the Administrator, General Services, or his/her designee, during an inspection of records conducted by GSA as part of that agency's responsibility to recommend improvements in records management practices and programs, under authority of 44 U.S.C. 2904 and 2906. Such disclosure shall be made in accordance with the GSA regulations governing inspection of records for this purpose, and any other relevant (i.e., GSA or Commerce) directive. Such disclosure shall not be used to make determinations about individuals.

8. A record from this system of records may be disclosed, as a routine use, to the public after either publication of the application pursuant to 35 U.S.C. 122(b) or issuance of a patent pursuant to 35 U.S.C. 151. Further, a record may be disclosed, subject to the limitations of 37 CFR 1.14, as a routine use, to the public if the record was filed in an application which became abandoned or in which the proceedings were terminated and which application is referenced by either a published application, an application open to public inspections or an issued patent.

9. A record from this system of records may be disclosed, as a routine use, to a Federal, State, or local law enforcement agency, if the USPTO becomes aware of a violation or potential violation of law or regulation.

UNITED STATES PATENT AND TRADEMARK OFFICE

Commissioner for Patents
United States Patent and Trademark Office
P.O. Box 1450
Alexandria, VA 22313-1450
www.uspto.gov

In re Patent No. 6486750
Issue Date: November 26,2002
Application No. 09457980
Filed: December 9,1999
Attorney Docket No. 4211-00003

:
:DECISION GRANTING PETITION
:UNDER 37 CFR 1.378(c)
:

This is a decision on the electronic petition, filed March 1,2011 ,under 37 CFR 1.378(c) to accept the unintentionally delayed payment of the 7.5 year maintenance fee for the above-identified patent.

The petition is **GRANTED**.

The maintenance fee is accepted, and the above-identified patent reinstated as of March 1,2011 .
This decision also constitutes notice that the fee has been accepted. An electronic copy of the petition and this decision has been created as an entry in the Image File Wrapper. Nevertheless, petitioner should print and retain an independent copy.

Telephone inquiries related to this electronic decision should be directed to the Electronic Business Center at 1-866-217-9197.

PTO/SB/66 (03-09)
Approved for use through 03/31/2012. OMB 0651-0016
U.S. Patent and Trademark Office: U.S. DEPARTMENT OF COMMERCE
Under the Paperwork Reduction Act of 1995, no persons are required to respond to a collection of information unless it displays valid OMB control number.

PETITION TO ACCEPT UNINTENTIONALLY DELAYED PAYMENT OF MAINTENANCE FEE IN AN EXPIRED PATENT (37 CFR 1.378(c))

Patent Number	Issue Date (YYYY-MM-DD)	Application Number	Filing Date (YYYY-MM-DD)	Docket Number (if applicable)
6912350	2005-06-28	09458109	1999-12-08	CT-317

CAUTION: Maintenance fee (and surcharge, if any) payment must correctly identify: (1) the patent number and (2) the application number of the actual U.S. application leading to issuance of that patent to ensure the fee(s) is/are associated with the correct patent. 37 CFR 1.366(c) and (d).

SMALL ENTITY

☐ Patentee claims, or has previously claimed, small entity status. See 37 CFR 1.27.

LOSS OF ENTITLEMENT TO SMALL ENTITY STATUS

☐ Patentee is no longer entitled to small entity status. See 37 CFR 1.27(g)

NOT Small Entity

	Fee	Code
◉	3 ½ year	(1551)
○	7 ½ year	(1552)
○	11 ½ year	(1553)

Small Entity

	Fee	Code
○	3 ½ year	(2551)
○	7 ½ year	(2552)
○	11 ½ year	(2553)

SURCHARGE

The surcharge required by 37 CFR 1.20(i)(2) (Fee Code 1558) must be paid as a condition of accepting unintentionally delayed payment of the maintenance fee.

MAINTENANCE FEE (37 CFR 1.20(e)-(g))

The appropriate maintenance fee must be submitted with this petition.

STATEMENT

THE UNDERSIGNED CERTIFIES THAT THE DELAY IN PAYMENT OF THE MAINTENANCE FEE TO THIS PATENT WAS UNINTENTIONAL

PETITIONER(S) REQUEST THAT THE DELAYED PAYMENT OF THE MAINTENANCE FEE BE ACCEPTED AND THE PATENT REINSTATED

THIS PORTION MUST BE COMPLETED BY THE SIGNATORY OR SIGNATORIES

37 CFR 1.378(d) states: "Any petition under this section must be signed by an attorney or agent registered to practice before the Patent and Trademark Office, or by the patentee, the assignee, or other party in interest."

I certify, in accordance with 37 CFR 1.4(d)(4) that I am

◉ An attorney or agent registered to practice before the Patent and Trademark Office

○ A sole patentee

○ A joint patentee; I certify that I am authorized to sign this submission on behalf of all the other patentees.

○ A joint patentee; all of whom are signing this e-petition

○ The assignee of record of the entire interest

PTO/SB/66 (03-09)
Approved for use through 03/31/2012. OMB 0651-0016
U.S. Patent and Trademark Office: U.S. DEPARTMENT OF COMMERCE
Under the Paperwork Reduction Act of 1995, no persons are required to respond to a collection of information unless it displays valid OMB control number.

Patent Practitioner			
A signature of the applicant or representative is required in accordance with 37 CFR 1.33 and 10.18. Please see 37 CFR 1.4(d) for the form of the signature			
Signature	/Kendal M. Sheets/	Date (YYYY-MM-DD)	2010-09-29
Name	Kendal M. Sheets	Registration Number	47077

This collection of information is required by 37 CFR 1.378(c). The information is required to obtain or retain a benefit by the public which is to file (and by the USPTO to process) an application. Confidentiality is governed by 35 U.S.C. 122 and 37 CFR 1.11 and 1.14. This collection is estimated to take 1 hour to complete, including gathering, preparing, and submitting the completed application form to the USPTO. Time will vary depending upon the individual case. Any comments on the amount of time you require to complete this form and/ or suggestions for reducing this burden, should be sent to the Chief Information Officer, U.S. Patent and Trademark Office, U.S. Department of Commerce, P.O. Box 1450, Alexandria, VA 22313-1450. DO NOT SEND FEES OR COMPLETED FORMS TO THIS ADDRESS. **This form can only be used when in conjunction with EFS-Web. If this form is mailed to the USPTO, it may cause delays in reinstating the patent.**

Privacy Act Statement

The Privacy Act of 1974 (P.L. 93-579) requires that you be given certain information in connection with your submission of the attached form related to a patent application or patent. Accordingly, pursuant to the requirements of the Act, please be advised that: (1) the general authority for the collection of this information is 35 U.S.C. 2(b)(2); (2) furnishing of the information solicited is voluntary; and (3) the principal purpose for which the information is used by the U.S. Patent and Trademark Office is to process and/or examine your submission related to a patent application or patent. If you do not furnish the requested information, the U.S. Patent and Trademark Office may not be able to process and/or examine your submission, which may result in termination of proceedings or abandonment of the application or expiration of the patent.

The information provided by you in this form will be subject to the following routine uses:

1. The information on this form will be treated confidentially to the extent allowed under the Freedom of Information Act (5 U.S.C. 552) and the Privacy Act (5 U.S.C. 552a). Records from this system of records may be disclosed to the Department of Justice to determine whether the Freedom of Information Act requires disclosure of these records.

2. A record from this system of records may be disclosed, as a routine use, in the course of presenting evidence to a court, magistrate, or administrative tribunal, including disclosures to opposing counsel in the course of settlement negotiations.

3. A record in this system of records may be disclosed, as a routine use, to a Member of Congress submitting a request involving an individual, to whom the record pertains, when the individual has requested assistance from the Member with respect to the subject matter of the record.

4. A record in this system of records may be disclosed, as a routine use, to a contractor of the Agency having need for the information in order to perform a contract. Recipients of information shall be required to comply with the requirements of the Privacy Act of 1974, as amended, pursuant to 5 U.S.C. 552a(m).

5. A record related to an International Application filed under the Patent Cooperation Treaty in this system of records may be disclosed, as a routine use, to the International Bureau of the World Intellectual Property Organization, pursuant to the Patent Cooperation Treaty.

6. A record in this system of records may be disclosed, as a routine use, to another federal agency for purposes of National Security review (35 U.S.C. 181) and for review pursuant to the Atomic Energy Act (42 U.S.C. 218(c)).

7. A record from this system of records may be disclosed, as a routine use, to the Administrator, General Services, or his/her designee, during an inspection of records conducted by GSA as part of that agency's responsibility to recommend improvements in records management practices and programs, under authority of 44 U.S.C. 2904 and 2906. Such disclosure shall be made in accordance with the GSA regulations governing inspection of records for this purpose, and any other relevant (i.e., GSA or Commerce) directive. Such disclosure shall not be used to make determinations about individuals.

8. A record from this system of records may be disclosed, as a routine use, to the public after either publication of the application pursuant to 35 U.S.C. 122(b) or issuance of a patent pursuant to 35 U.S.C. 151. Further, a record may be disclosed, subject to the limitations of 37 CFR 1.14, as a routine use, to the public if the record was filed in an application which became abandoned or in which the proceedings were terminated and which application is referenced by either a published application, an application open to public inspections or an issued patent.

9. A record from this system of records may be disclosed, as a routine use, to a Federal, State, or local law enforcement agency, if the USPTO becomes aware of a violation or potential violation of law or regulation.

UNITED STATES PATENT AND TRADEMARK OFFICE

Commissioner for Patents
United States Patent and Trademark Office
P.O. Box 1450
Alexandria, VA 22313-1450
www.uspto.gov

In re Patent No. 6912350
Issue Date: June 28,2005
Application No. 09458109
Filed: December 8,1999
Attorney Docket No. CT-317

:
:DECISION GRANTING PETITION
:UNDER 37 CFR 1.378(c)
:

This is a decision on the electronic petition, filed October 1,2010 ,under 37 CFR 1.378(c) to accept the unintentionally delayed payment of the 3.5 year maintenance fee for the above-identified patent.

The petition is **GRANTED**.

The maintenance fee is accepted, and the above-identified patent reinstated as of October 1,2010 . This decision also constitutes notice that the fee has been accepted. An electronic copy of the petition and this decision has been created as an entry in the Image File Wrapper. Nevertheless, petitioner should print and retain an independent copy.

Telephone inquiries related to this electronic decision should be directed to the Electronic Business Center at 1-866-217-9197.

SPE RESPONSE FOR CERTIFICATE OF CORRECTION

Paper No.: _____

DATE : 09/30/10

TO SPE OF : ART UNIT 3738

SUBJECT : Request for Certificate of Correction for Appl. No.: 09458141 Patent No.: 6309415

Please respond to this request for a certificate of correction within 7 days.

FOR IFW FILES:

Please review the requested changes/corrections as shown in the **COCIN** document(s) in the IFW application image. No new matter should be introduced, nor should the scope or meaning of the claims be changed.

Please complete the response (see below) and forward the completed response to scanning using document code **COCX**.

FOR PAPER FILES:

Please review the requested changes/corrections as shown in the attached certificate of correction. Please complete this form (see below) and forward it with the file to:

Certificates of Correction Branch (C of C)
Randolph Square 9D40-D
Palm Location 7580

You can fax the Directors/SPE response to 571-270-9990

Lamonte Newsome
Certificates of Correction Branch
703-756-1574

Thank You For Your Assistance

The request for issuing the above-identified correction(s) is hereby:
Note your decision on the appropriate box.

- ☒ **Approved** — **All** changes apply.
- ☐ **Approved in Part** — Specify below which changes **do not** apply.
- ☐ **Denied** — State the reasons for denial below.

Comments: _____

/SJG/ 10/20/10

_____ 3738
SPE **Art Unit**

SPE RESPONSE FOR CERTIFICATE OF CORRECTION

UNITED STATES PATENT AND TRADEMARK OFFICE

Commissioner for Patents
United States Patent and Trademark Office
P.O. Box 1450
Alexandria, VA 22313-1450
www.uspto.gov

Paper No. 18

D. W. EGGINS
18 DOWNSVIEW DRIVE
BARRIE L4M2Y-7 CA **CANADA**

MAILED

JAN 31 2011

OFFICE OF PETITIONS

In re Patent No. 6,453,590 :
Issue Date: September 24, 2002 :
Application No. 09/458,179 : ON PETITION
Filed: November 19, 1999 :
Patentee(s): Edward Allen Burke :

This is a decision on the petition under 37 CFR 1.378(c), filed on December 21, 2010, to accept the delayed payment of a maintenance fee for the above-identified patent.

The petition is **DISMISSED**.

A petition to accept the unintentionally delayed payment of a maintenance fee under 35 U.S.C. § 41(c) and 37 CFR 1.378(c) must be accompanied by: (1) a statement that the delay was unintentional; (2) payment of the appropriate maintenance fee, unless previously submitted; (3) payment of the surcharge set forth in 37 CFR 1.20(i)(2). This petition lacks item (3) above.

A review of the record shows that petitioner submitted payment of $1,305 for the payment of the maintenance fee for the above-identified patent. The fee payment of $1,305 has been applied as follows: $1,240 for payment of the 7 ½ year small entity maintenance fee and $65 towards the unintentional late payment surcharge. However, the proper surcharge for a patent expired unintentionally after the six months grace period is $1,640. Therefore, this patent cannot be reinstated until the deficiency of $1,575 (1640–65) has been submitted.

If reconsideration of this decision is desired, a petition for reconsideration under 37 CFR 1.378(e) must be filed within **TWO (2) MONTHS** from the mail date of this decision. No extension of this two-month time limit can be granted under 37 CFR 1.136(a) or (b). This is **not** a final agency action within the meaning of 5 U.S.C. § 704.

Any petition for reconsideration of this decision must be accompanied by the petition fee of $400 as set forth in 37 CFR 1.17(f). The petition for reconsideration must include the lacking item(s) noted above, since, after a decision on the petition for reconsideration, no further reconsideration or review of the matter will be undertaken by the Commissioner.

Further correspondence with respect to this matter should be addressed as follows:

By mail:
Mail Stop PETITION
Commissioner for Patents
Post Office Box 1450
Alexandria, VA 22313-1450

By hand:
U.S. Patent and Trademark Office
Customer Service Window, Mail Stop Petitions
Randolph Building
401 Dulany Street
Alexandria, VA 22314

The centralized facsimile number is (571) 273-8300.

Telephone inquiries should be directed to the undersigned at (571) 272-3226.

Andrea Smith
Petitions Examiner
Office of Petitions

UNITED STATES PATENT AND TRADEMARK OFFICE

Commissioner for Patents
United States Patent and Trademark Office
P.O. Box 1450
Alexandria, VA 22313-1450
www.uspto.gov

D. W. EGGINS
18 DOWNSVIEW DRIVE
BARRIE L4M2Y-7 CA **CANADA**

MAILED

MAR 24 2011

OFFICE OF PETITIONS

In re Patent No. 6,453,590 :
Issue Date: September 24, 2002 :
Application No. 09/458,179 : ON PETITION
Filed: November 19, 1999 :
Patentee(s): Edward Allen Burke :

This is a decision on the renewed petition under 37 CFR 1.378(c), filed on February 11, 2011, to accept the delayed payment of a maintenance fee for the above-identified patent.

In response to the decision mailed January 31, 2011, petitioner submits the present renewed petition along with the $400 petition fee and the fee deficiency of $1,575 to complete the unintentional surcharge on February 11, 2011.

Since petitioner has demonstrated to the satisfaction of the Commissioner that the delay in timely paying the maintenance fee was unintentional, the petition under 37 CFR 1.378(c) is hereby **GRANTED**.

The maintenance fee is hereby accepted and the above-identified patent is reinstated as of the mail date of this decision.

This patented file is being forwarded to Files Repository.

Telephone inquiries should be directed to the undersigned at (571) 272-3226.

Andrea Smith
Petitions Examiner
Office of Petitions

UNITED STATES PATENT AND TRADEMARK OFFICE

Commissioner for Patents
United States Patent and Trademark Office
P.O. Box 1450
Alexandria, VA 22313-1450
www.uspto.gov

M BUD NELSON
BIOCRYSTAL LTD
575 MCCORKLE BOULEVARD
WESTERVILLE OH 43082-8888

Paper No. 6

MAILED

OCT 22 2010

OFFICE OF PETITIONS

In re Application of
Emilio BARBERA-GUILLEM et al.
Application No. 09/458,752
Patent No. 6,194,213
Filed: December 10, 1999
Attorney Docket No. B-24

NOTICE UNDER 37 CFR. 1.28(c)

This is a notice regarding your request for acceptance of a fee deficiency submission under 37 CFR 1.28. On September 1, 1998, the Court of Appeals for the Federal Circuit held that 37 CFR 1.28(c) is the sole provision governing the time for correction of the erroneous payment of the issue fee as a small entity. **See DH Technology v. Synergystex International, Inc. 154 F.3d 1333, 47 USPQ2d 1865 (Fed. Cir. Sept. 1, 1998).**

The Office no longer investigates or rejects original or reissue applications under 37 CFR 1.56. **1098 Off. Gaz. Pat. Office 502 (January 3, 1989)**. Therefore, nothing in this Notice is intended to imply that an investigation was done.

Your fee deficiency submission under 37 CFR 1.28 is hereby **NOT ACCEPTED**.

The fee deficiency cannot be accepted because no itemization has been submitted, as required by 37 CFR 1.28(C) (ii) which states:

(2) Payment of deficiency owed. The deficiency owed, resulting from the previous erroneous payment of small entity fees, must be paid.

(ii) *Itemization of the deficiency payment.* An itemization of the total deficiency payment is required. The itemization must include the following information:

(A) Each particular type of fee that was erroneously paid as a small entity, (e.g., basic statutory filing fee, two-month extension of time fee) along with the current fee amount for non-small entity;

(B) The small entity fee actually paid, and when. This will permit the Office to differentiate, for example, between two one-month extension of time fees erroneously paid as a small entity but on different dates;

(C) The deficiency owed amount (for each fee erroneously paid); and

(D) The total deficiency payment owed, which is the sum or total of the individual deficiency owed amounts set forth in paragraph (c)(2)(ii)(C) of this section.

The itemization must be provided within one (1) month from the date of this decision to avoid the return of the deficiency.

Inquiries related to this communication should be directed to Michelle R. Eason at (571) 272-4231.

Thurman K. Page
Petitions Examiner
Office of Petitions

UNITED STATES PATENT AND TRADEMARK OFFICE

Commissioner for Patents
United States Patent and Trademark Office
P.O. Box 1450
Alexandria, VA 22313-1450
www.uspto.gov

GARDNER GROFF GREENWALD & VILLANUEVA. PC
2018 POWERS FERRY ROAD
SUITE 800
ATLANTA GA 30339

MAILED
DEC 20 2011
OFFICE OF PETITIONS

In re Patent No. 6,402,759 :
Issued: June 11, 2002 :
Application No. 09/458,914 : NOTICE
Filed: December 10, 1999 :
Attorney Docket No. 02071.0011 :

This is a notice regarding your request for acceptance of a fee deficiency submission under 37 CFR 1.28 filed November 4, 2011.

On September 1, 1998, the Court of Appeals for the Federal Circuit held that 37 CFR 1.28(c) is the sole provision governing the time for correction of the erroneous payment of the issue fee as a small entity. **See DH Technology v. Synergystex International, Inc. 154 F.3d 1333, 47 USPQ2d 1865 (Fed. Cir. Sept. 1, 1998).**

The Office no longer investigates or rejects original or reissue applications under 37 CFR 1.56. **1098 Off. Gaz. Pat. Office 502 (January 3, 1989)**. Therefore, nothing in this Notice is intended to imply that an investigation was done.

Your fee deficiency submission under 37 CFR 1.28 is hereby **ACCEPTED**.

This patent is no longer entitled to small entity status. Accordingly, all future fees paid in this patent must be paid at the large entity rate.

Telephone inquiries concerning this decision should be directed to the undersigned at (571) 272-7751.

/Joan Olszewski/
Joan Olszewski
Petitions Examiner
Office of Petitions

UNITED STATES PATENT AND TRADEMARK OFFICE

Commissioner for Patents
United States Patent and Trademark Office
P.O. Box 1450
Alexandria, VA 22313-1450
www.uspto.gov

Paper No.

HOLTZ, HOLTZ, GOODMAN & CHICK PC
220 Fifth Avenue
16TH Floor
NEW YORK NY 10001-7708

MAILED

JUL 28 2011

OFFICE OF PETITIONS

In re Application of :
Ishida :
Application No. 09/459,021 :
Patent No.: 6,279,521 : DECISION ON PETITION
Filed: December 10, 1999 : PURSUANT TO
Issued: August 28, 2001 : 37 C.F.R. § 1.28(c)
Title: TWO-CYCLE ENGINE :
:

This is a notice regarding your request for acceptance of a fee deficiency submission pursuant to 37 C.F.R. § 1.28, received on July 5, 2011. On September 1, 1998, the Court of Appeals for the Federal Circuit held that 37 C.F.R. § 1.28(c) is the sole provision governing the time for correction of the erroneous payment of the issue fee as a small entity. See DH Technology v. Synergystex International, Inc. 154 F.3d 1333, 47 USPQ2d 1865 (Fed. Cir. Sept. 1, 1998).

The Office no longer investigates or rejects original or reissue applications under 37 C.F.R. § 1.56. 1098 Off. Gaz. Pat. Office 502 (January 3, 1989). Therefore, nothing in this notice is intended to imply that an investigation was done.

Petitioner has identified the particular type of fee that was erroneously paid as a small entity, when the small entity fee was actually paid, the small entity fee that was actually paid, the deficiency owed amount, and the total deficiency payment owed.

The deficiency payment in the amount of $1240 has been received.

Your fee deficiency submission pursuant to 37 C.F.R. § 1.28(c) is hereby accepted. The petition is **GRANTED** accordingly.

This patent is no longer entitled to small entity status. Accordingly, all future fees paid in this patent must be paid at the large entity rate.

It is noted that the address listed on the petition differs from the address of record. The application file does not indicate a change of correspondence address has been filed in this case, although the address given on the petition differs from the address of record. If Petitioner desires to receive future correspondence regarding this patent, the change of correspondence address must be submitted. A courtesy copy of this decision will be mailed to the address which appears on the petition. However, all future correspondence will be directed to the address of record until such time as appropriate instructions are received to the contrary. Petitioner will not receive future correspondence related to this patent unless Change of Correspondence Address, Patent Form (PTO/SB/123) is submitted for the above-identified patent. For Petitioner's convenience, a blank Change of Correspondence Address, Patent Form (PTO/SB/123), may be found at http://www.uspto.gov/web/forms/sb0123.pdf.

If appropriate, a change of fee address (form PTO/SB/47) and a request for customer number (form PTO/SB/125) should be filed in accordance with Manual of Patent Examining Procedure, section 2540. A blank fee address form may be found at http://www.uspto.gov/web/forms/sb0047.pdf.

Telephone inquiries regarding *this decision* should be directed to the undersigned at (571) 272-3225.[1]

/Paul Shanoski/
Paul Shanoski
Senior Attorney
Office of Petitions

cc: Kendall M. Sheets
CPA Global
2318 Mill Road
Suite, 12th Floor
Alexandria, VA 22314

1 Petitioner will note that all practice before the Office should be in writing, and the action of the Office will be based exclusively on the written record in the Office. See 37 C.F.R. § 1.2. As such, Petitioner is reminded that no telephone discussion may be controlling or considered authority for Petitioner's further action(s).

UNITED STATES PATENT AND TRADEMARK OFFICE

Commissioner for Patents
United States Patent and Trademark Office
P.O. Box 1450
Alexandria, VA 22313-1450
www.uspto.gov

In re Patent No. 6319156
Issue Date: November 20,2001
Application No. 09459277
Filed: December 13,1999
Attorney Docket No. MARSL-005A

:
:DECISION GRANTING PETITION
:UNDER 37 CFR 1.378(c)
:

This is a decision on the electronic petition, filed September 7,2011 ,under 37 CFR 1.378(c) to accept the unintentionally delayed payment of the 7.5 year maintenance fee for the above-identified patent.

The petition is **GRANTED**.

The maintenance fee is accepted, and the above-identified patent reinstated as of September 7,2011 . This decision also constitutes notice that the fee has been accepted. An electronic copy of the petition and this decision has been created as an entry in the Image File Wrapper. Nevertheless, petitioner should print and retain an independent copy.

Telephone inquiries related to this electronic decision should be directed to the Electronic Business Center at 1-866-217-9197.

PTO/SB/66 (03-09)
Approved for use through 03/31/2012. OMB 0651-0016
U.S. Patent and Trademark Office: U.S. DEPARTMENT OF COMMERCE
Under the Paperwork Reduction Act of 1995, no persons are required to respond to a collection of information unless it displays valid OMB control number.

PETITION TO ACCEPT UNINTENTIONALLY DELAYED PAYMENT OF MAINTENANCE FEE IN AN EXPIRED PATENT (37 CFR 1.378(c))

Patent Number	Issue Date (YYYY-MM-DD)	Application Number	Filing Date (YYYY-MM-DD)	Docket Number (if applicable)
6319156	2001-11-20	09459277	1999-12-13	MARSL-005A

CAUTION: Maintenance fee (and surcharge, if any) payment must correctly identify: (1) the patent number and (2) the application number of the actual U.S. application leading to issuance of that patent to ensure the fee(s) is/are associated with the correct patent. 37 CFR 1.366(c) and (d).

SMALL ENTITY

☒ Patentee claims, or has previously claimed, small entity status. See 37 CFR 1.27.

LOSS OF ENTITLEMENT TO SMALL ENTITY STATUS

☐ Patentee is no longer entitled to small entity status. See 37 CFR 1.27(g)

NOT Small Entity			Small Entity		
	Fee	Code		Fee	Code
○	3 ½ year	(1551)	○	3 ½ year	(2551)
○	7 ½ year	(1552)	◉	7 ½ year	(2552)
○	11 ½ year	(1553)	○	11 ½ year	(2553)

SURCHARGE

The surcharge required by 37 CFR 1.20(i)(2) (Fee Code 1558) must be paid as a condition of accepting unintentionally delayed payment of the maintenance fee.

MAINTENANCE FEE (37 CFR 1.20(e)-(g))

The appropriate maintenance fee must be submitted with this petition.

STATEMENT

THE UNDERSIGNED CERTIFIES THAT THE DELAY IN PAYMENT OF THE MAINTENANCE FEE TO THIS PATENT WAS UNINTENTIONAL

PETITIONER(S) REQUEST THAT THE DELAYED PAYMENT OF THE MAINTENANCE FEE BE ACCEPTED AND THE PATENT REINSTATED

THIS PORTION MUST BE COMPLETED BY THE SIGNATORY OR SIGNATORIES

37 CFR 1.378(d) states: "Any petition under this section must be signed by an attorney or agent registered to practice before the Patent and Trademark Office, or by the patentee, the assignee, or other party in interest."

I certify, in accordance with 37 CFR 1.4(d)(4) that I am

◉ An attorney or agent registered to practice before the Patent and Trademark Office

○ A sole patentee

○ A joint patentee; I certify that I am authorized to sign this submission on behalf of all the other patentees.

○ A joint patentee; all of whom are signing this e-petition

○ The assignee of record of the entire interest

PTO/SB/66 (03-09)
Approved for use through 03/31/2012. OMB 0651-0016
U.S. Patent and Trademark Office: U.S. DEPARTMENT OF COMMERCE
Under the Paperwork Reduction Act of 1995, no persons are required to respond to a collection of information unless it displays valid OMB control number.

Patent Practitioner			
A signature of the applicant or representative is required in accordance with 37 CFR 1.33 and 10.18. Please see 37 CFR 1.4(d) for the form of the signature			
Signature	/MAN/	Date (YYYY-MM-DD)	2011-09-07
Name	MATTHEW A. NEWBOLES	Registration Number	36224

This collection of information is required by 37 CFR 1.378(c). The information is required to obtain or retain a benefit by the public which is to file (and by the USPTO to process) an application. Confidentiality is governed by 35 U.S.C. 122 and 37 CFR 1.11 and 1.14. This collection is estimated to take 1 hour to complete, including gathering, preparing, and submitting the completed application form to the USPTO. Time will vary depending upon the individual case. Any comments on the amount of time you require to complete this form and/ or suggestions for reducing this burden, should be sent to the Chief Information Officer, U.S. Patent and Trademark Office, U.S. Department of Commerce, P.O. Box 1450, Alexandria, VA 22313-1450. DO NOT SEND FEES OR COMPLETED FORMS TO THIS ADDRESS. **This form can only be used when in conjunction with EFS-Web. If this form is mailed to the USPTO, it may cause delays in reinstating the patent.**

Privacy Act Statement

The Privacy Act of 1974 (P.L. 93-579) requires that you be given certain information in connection with your submission of the attached form related to a patent application or patent. Accordingly, pursuant to the requirements of the Act, please be advised that: (1) the general authority for the collection of this information is 35 U.S.C. 2(b)(2); (2) furnishing of the information solicited is voluntary; and (3) the principal purpose for which the information is used by the U.S. Patent and Trademark Office is to process and/or examine your submission related to a patent application or patent. If you do not furnish the requested information, the U.S. Patent and Trademark Office may not be able to process and/or examine your submission, which may result in termination of proceedings or abandonment of the application or expiration of the patent.

The information provided by you in this form will be subject to the following routine uses:

1. The information on this form will be treated confidentially to the extent allowed under the Freedom of Information Act (5 U.S.C. 552) and the Privacy Act (5 U.S.C. 552a). Records from this system of records may be disclosed to the Department of Justice to determine whether the Freedom of Information Act requires disclosure of these records.

2. A record from this system of records may be disclosed, as a routine use, in the course of presenting evidence to a court, magistrate, or administrative tribunal, including disclosures to opposing counsel in the course of settlement negotiations.

3. A record in this system of records may be disclosed, as a routine use, to a Member of Congress submitting a request involving an individual, to whom the record pertains, when the individual has requested assistance from the Member with respect to the subject matter of the record.

4. A record in this system of records may be disclosed, as a routine use, to a contractor of the Agency having need for the information in order to perform a contract. Recipients of information shall be required to comply with the requirements of the Privacy Act of 1974, as amended, pursuant to 5 U.S.C. 552a(m).

5. A record related to an International Application filed under the Patent Cooperation Treaty in this system of records may be disclosed, as a routine use, to the International Bureau of the World Intellectual Property Organization, pursuant to the Patent Cooperation Treaty.

6. A record in this system of records may be disclosed, as a routine use, to another federal agency for purposes of National Security review (35 U.S.C. 181) and for review pursuant to the Atomic Energy Act (42 U.S.C. 218(c)).

7. A record from this system of records may be disclosed, as a routine use, to the Administrator, General Services, or his/her designee, during an inspection of records conducted by GSA as part of that agency's responsibility to recommend improvements in records management practices and programs, under authority of 44 U.S.C. 2904 and 2906. Such disclosure shall be made in accordance with the GSA regulations governing inspection of records for this purpose, and any other relevant (i.e., GSA or Commerce) directive. Such disclosure shall not be used to make determinations about individuals.

8. A record from this system of records may be disclosed, as a routine use, to the public after either publication of the application pursuant to 35 U.S.C. 122(b) or issuance of a patent pursuant to 35 U.S.C. 151. Further, a record may be disclosed, subject to the limitations of 37 CFR 1.14, as a routine use, to the public if the record was filed in an application which became abandoned or in which the proceedings were terminated and which application is referenced by either a published application, an application open to public inspections or an issued patent.

9. A record from this system of records may be disclosed, as a routine use, to a Federal, State, or local law enforcement agency, if the USPTO becomes aware of a violation or potential violation of law or regulation.

SPE RESPONSE FOR CERTIFICATE OF CORRECTION

Paper No.: _____

DATE : 08/30/11

TO SPE OF : ART UNIT 2493

SUBJECT : Request for Certificate of Correction for Appl. No 09/459,493 7281272

Please respond to this request for a certificate of correction within 7 days.

FOR IFW FILES:

Please review the requested changes/corrections as shown in the **COCIN** document(s) in the IFW application image. No new matter should be introduced, nor should the scope or meaning of the claims be changed.

Please complete the response (see below) and forward the completed response to scanning using document code **COCX**.

FOR PAPER FILES:

Please review the requested changes/corrections as shown in the attached certificate of correction. Please complete this form (see below) and forward it with the file to:

Certificates of Correction Branch (CofC)

Should the change(s) Be made?

RoChaun Hardwick
Certificates of Correction Branch
571 272-0470

Thank You For Your Assistance

The request for issuing the above-identified correction(s) is hereby:

Note your decision on the appropriate box.

☑ **Approved**	**All** changes apply.
☐ **Approved in Part**	Specify below which changes **do not** apply.
☐ **Denied**	State the reasons for denial below.

Comments: _____

_____

_____

_____

_____

/Carl Colin/ 2493
SPE **Art Unit**

PTO/SB/66 (03-09)
Approved for use through 03/31/2012. OMB 0651-0016
U.S. Patent and Trademark Office: U.S. DEPARTMENT OF COMMERCE
Under the Paperwork Reduction Act of 1995, no persons are required to respond to a collection of information unless it displays valid OMB control number.

PETITION TO ACCEPT UNINTENTIONALLY DELAYED PAYMENT OF MAINTENANCE FEE IN AN EXPIRED PATENT (37 CFR 1.378(c))

Patent Number	Issue Date (YYYY-MM-DD)	Application Number	Filing Date (YYYY-MM-DD)	Docket Number (if applicable)
6857101	2005-02-15	09459598	1999-12-14	162/01172

CAUTION: Maintenance fee (and surcharge, if any) payment must correctly identify: (1) the patent number and (2) the application number of the actual U.S. application leading to issuance of that patent to ensure the fee(s) is/are associated with the correct patent. 37 CFR 1.366(c) and (d).

SMALL ENTITY

☐ Patentee claims, or has previously claimed, small entity status. See 37 CFR 1.27.

LOSS OF ENTITLEMENT TO SMALL ENTITY STATUS

☐ Patentee is no longer entitled to small entity status. See 37 CFR 1.27(g)

NOT Small Entity			Small Entity		
	Fee	Code		Fee	Code
◉	3 ½ year	(1551)	○	3 ½ year	(2551)
○	7 ½ year	(1552)	○	7 ½ year	(2552)
○	11 ½ year	(1553)	○	11 ½ year	(2553)

SURCHARGE

The surcharge required by 37 CFR 1.20(i)(2) (Fee Code 1558) must be paid as a condition of accepting unintentionally delayed payment of the maintenance fee.

MAINTENANCE FEE (37 CFR 1.20(e)-(g))

The appropriate maintenance fee must be submitted with this petition.

STATEMENT

THE UNDERSIGNED CERTIFIES THAT THE DELAY IN PAYMENT OF THE MAINTENANCE FEE TO THIS PATENT WAS UNINTENTIONAL

PETITIONER(S) REQUEST THAT THE DELAYED PAYMENT OF THE MAINTENANCE FEE BE ACCEPTED AND THE PATENT REINSTATED

THIS PORTION MUST BE COMPLETED BY THE SIGNATORY OR SIGNATORIES

37 CFR 1.378(d) states: "Any petition under this section must be signed by an attorney or agent registered to practice before the Patent and Trademark Office, or by the patentee, the assignee, or other party in interest."

I certify, in accordance with 37 CFR 1.4(d)(4) that I am

◉ An attorney or agent registered to practice before the Patent and Trademark Office

○ A sole patentee

○ A joint patentee; I certify that I am authorized to sign this submission on behalf of all the other patentees.

○ A joint patentee; all of whom are signing this e-petition

○ The assignee of record of the entire interest

PTO/SB/66 (03-09)
Approved for use through 03/31/2012. OMB 0651-0016
U.S. Patent and Trademark Office: U.S. DEPARTMENT OF COMMERCE
Under the Paperwork Reduction Act of 1995, no persons are required to respond to a collection of information unless it displays valid OMB control number.

Patent Practitioner			
A signature of the applicant or representative is required in accordance with 37 CFR 1.33 and 10.18. Please see 37 CFR 1.4(d) for the form of the signature			
Signature	/Kendal M. Sheets/	Date (YYYY-MM-DD)	2010-09-29
Name	Kendal M. Sheets	Registration Number	47077

This collection of information is required by 37 CFR 1.378(c). The information is required to obtain or retain a benefit by the public which is to file (and by the USPTO to process) an application. Confidentiality is governed by 35 U.S.C. 122 and 37 CFR 1.11 and 1.14. This collection is estimated to take 1 hour to complete, including gathering, preparing, and submitting the completed application form to the USPTO. Time will vary depending upon the individual case. Any comments on the amount of time you require to complete this form and/ or suggestions for reducing this burden, should be sent to the Chief Information Officer, U.S. Patent and Trademark Office, U.S. Department of Commerce, P.O. Box 1450, Alexandria, VA 22313-1450. DO NOT SEND FEES OR COMPLETED FORMS TO THIS ADDRESS. **This form can only be used when in conjunction with EFS-Web. If this form is mailed to the USPTO, it may cause delays in reinstating the patent.**

Privacy Act Statement

The Privacy Act of 1974 (P.L. 93-579) requires that you be given certain information in connection with your submission of the attached form related to a patent application or patent. Accordingly, pursuant to the requirements of the Act, please be advised that: (1) the general authority for the collection of this information is 35 U.S.C. 2(b)(2); (2) furnishing of the information solicited is voluntary; and (3) the principal purpose for which the information is used by the U.S. Patent and Trademark Office is to process and/or examine your submission related to a patent application or patent. If you do not furnish the requested information, the U.S. Patent and Trademark Office may not be able to process and/or examine your submission, which may result in termination of proceedings or abandonment of the application or expiration of the patent.

The information provided by you in this form will be subject to the following routine uses:

1. The information on this form will be treated confidentially to the extent allowed under the Freedom of Information Act (5 U.S.C. 552) and the Privacy Act (5 U.S.C. 552a). Records from this system of records may be disclosed to the Department of Justice to determine whether the Freedom of Information Act requires disclosure of these records.

2. A record from this system of records may be disclosed, as a routine use, in the course of presenting evidence to a court, magistrate, or administrative tribunal, including disclosures to opposing counsel in the course of settlement negotiations.

3. A record in this system of records may be disclosed, as a routine use, to a Member of Congress submitting a request involving an individual, to whom the record pertains, when the individual has requested assistance from the Member with respect to the subject matter of the record.

4. A record in this system of records may be disclosed, as a routine use, to a contractor of the Agency having need for the information in order to perform a contract. Recipients of information shall be required to comply with the requirements of the Privacy Act of 1974, as amended, pursuant to 5 U.S.C. 552a(m).

5. A record related to an International Application filed under the Patent Cooperation Treaty in this system of records may be disclosed, as a routine use, to the International Bureau of the World Intellectual Property Organization, pursuant to the Patent Cooperation Treaty.

6. A record in this system of records may be disclosed, as a routine use, to another federal agency for purposes of National Security review (35 U.S.C. 181) and for review pursuant to the Atomic Energy Act (42 U.S.C. 218(c)).

7. A record from this system of records may be disclosed, as a routine use, to the Administrator, General Services, or his/her designee, during an inspection of records conducted by GSA as part of that agency's responsibility to recommend improvements in records management practices and programs, under authority of 44 U.S.C. 2904 and 2906. Such disclosure shall be made in accordance with the GSA regulations governing inspection of records for this purpose, and any other relevant (i.e., GSA or Commerce) directive. Such disclosure shall not be used to make determinations about individuals.

8. A record from this system of records may be disclosed, as a routine use, to the public after either publication of the application pursuant to 35 U.S.C. 122(b) or issuance of a patent pursuant to 35 U.S.C. 151. Further, a record may be disclosed, subject to the limitations of 37 CFR 1.14, as a routine use, to the public if the record was filed in an application which became abandoned or in which the proceedings were terminated and which application is referenced by either a published application, an application open to public inspections or an issued patent.

9. A record from this system of records may be disclosed, as a routine use, to a Federal, State, or local law enforcement agency, if the USPTO becomes aware of a violation or potential violation of law or regulation.

UNITED STATES PATENT AND TRADEMARK OFFICE

Commissioner for Patents
United States Patent and Trademark Office
P.O. Box 1450
Alexandria, VA 22313-1450
www.uspto.gov

In re Patent No. 6857101
Issue Date: February 15,2005
Application No. 09459598
Filed: December 14,1999
Attorney Docket No. 162/01172

:
:DECISION GRANTING PETITION
:UNDER 37 CFR 1.378(c)
:

This is a decision on the electronic petition, filed October 1,2010 ,under 37 CFR 1.378(c) to accept the unintentionally delayed payment of the 3.5 year maintenance fee for the above-identified patent.

The petition is **GRANTED**.

The maintenance fee is accepted, and the above-identified patent reinstated as of October 1,2010 . This decision also constitutes notice that the fee has been accepted. An electronic copy of the petition and this decision has been created as an entry in the Image File Wrapper. Nevertheless, petitioner should print and retain an independent copy.

Telephone inquiries related to this electronic decision should be directed to the Electronic Business Center at 1-866-217-9197.

UNITED STATES PATENT AND TRADEMARK OFFICE

Commissioner for Patents
United States Patent and Trademark Office
P.O. Box 1450

MAILED
SEP 20 2011
OFFICE OF PETITIONS

BUCHANAN, INGERSOLL & ROONEY PC
POST OFFICE BOX 1404
ALEXANDRIA VA 22313-1404

In re Patent No. 6,324,069 :
Issue Date: November 27, 2001 : ON PETITION
Application No. 09/459,602 :
Filed: December 13, 1999 :

This is a decision on the petition under 37 CFR 1.378(c), filed August 29, 2011, to accept the unintentionally delayed payment of a maintenance fee for the above-identified application.

The petition is **GRANTED**.

The patent expired on November 28, 2009 for failure to pay the seven and one-half year maintenance fee. Since this petition was submitted within twenty-four months after the six-month grace period provided in 37 CFR 1.362(e), the petition was timely filed under the provisions of 37 CFR 1.378(c).

The maintenance fee is hereby accepted and the above-identified patent is reinstated as of the mailing date of this decision.

It is not apparent whether the person signing the statement of unintentional delay was in a position to have firsthand or direct knowledge of the facts and circumstances of the delay at issue. Nevertheless, such statement is being treated as having been made as the result of a reasonable inquiry into the facts and circumstances of such delay. In the event that such an inquiry has not been made, petitioner must make such an inquiry. While a courtesy copy of this decision is being mailed to the person signing the instant petition, all future correspondence will be directed to the address currently of record until such time as appropriate instructions are received to the contrary.

Telephone inquires regarding this decision should be directed to Robert DeWitty, Petitions Attorney, Office of Petitions (571-272-8427).

for Anthony Knight
Director
Office of Petitions

cc: Jaye G. Heybl
2815 Townsgate Road
Suite 215
Westlake Village, CA 91361

UNITED STATES PATENT AND TRADEMARK OFFICE

UNITED STATES DEPARTMENT OF COMMERCE
United States Patent and Trademark Office
Address: COMMISSIONER FOR PATENTS
P.O. Box 1450
Alexandria, Virginia 22313-1450
www.uspto.gov

CAMPBELL STEPHENSON LLP
11401 CENTURY OAKS TERRACE
BLDG. H, SUITE 250
AUSTIN, TX 78758

Mail Date: 08/05/2010

Applicant	: SHMUEL SHAFFER	: DECISION ON REQUEST FOR
Patent Number	: 7660849	: RECALCULATION of PATENT
Issue Date	: 02/09/2010	: TERM ADJUSTMENT IN VIEW
Application No	: 09/460,089	: OF WYETH
Filed	: 12/14/1999	:
		:

The Patentee's Request for Recalculation is **DISMISSED.**

This Request is deemed ineligible for consideration for one or more of the following reasons:

(A). The patent for which PTA recalculation is requested is either a design or reissue application or is a reexamination proceeding;

(B). The patent for which PTA recalculation is requested resulted from a utility or plant application filed under 35 USC 111(a) before May 29, 2000 and no CPA filed in the application on/after May 29, 2000;

(C). The patent for which PTA recalculation is requested resulted from an international application in which the international filing date was before May 29, 2000 and no CPA filed in the application on/after May 29, 2000;

(D). The patent for which PTA recalculation is requested issued on/after March 2, 2010;

(E). The Request for Recalculation was filed more than 180 days after the grant date of the patent and the request was not filed within two months of a dismissal of a request for reconsideration of the of the patent term under 37 CFR 1.705(d);

(F). The Request for Recalculation is not solely limited to USPTO pre-Wyeth interpretation of 35 U.S.C. 154(b)(2)(A);

or

(G). A civil action was filed pursuant to 35 U.S.C. 154(b)(4)(A)concerning the same patent at issue in this request.

Patentee may file a reply to this decision dismissing the Request for Recalculation. Patentee must file such reply within one month or thirty days, whichever is longer, of the mail date of the decision dismissing the Request for Recalculation. No fee is required if patentee is asserting in the reply that the dismissal for ineligibility is improper.

Patentee should use document code PET.OP if electronically filing a reply to this dismissal. If the USPTO finds that the request was improperly deemed ineligible, the USPTO will mail applicant a recalculation determination.

Patentee should be aware that in order to preserve the right to review in the United States District Court for the District of Columbia of the USPTO patent term adjustment determination, patentee must ensure that he or she also take the steps required under 35 U.S.C. 154(b)(4)(A). Nothing in the request for recalculation should be construed as providing an alternative time frame for commencing a civil action under 35 U.S.C. 154 (b)(4)(A).

Any questions concerning this decision should be directed to the Office of Patent Legal Administration at 571-272-7702.

UNITED STATES PATENT AND TRADEMARK OFFICE

Commissioner for Patents
United States Patent and Trademark Office
P.O. Box 1450
Alexandria, VA 22313-1450
www.uspto.gov

MAILED
JUL 21 2011
OFFICE OF PETITIONS

KENNETH C. SPAFFORD
708 SMITHSON AVENUE
ERIE, PA 16511

In re Patent No. 6,331,926 :
Issue Date: December 18, 2001 :
Application No. 09/460,218 : NOTICE
Filed: December 13, 1999 :
Attorney Docket No. X2YA0110U-US :

This is a notice regarding your request for acceptance of a fee deficiency submission under 37 CFR 1.28. On September 1, 1998, the Court of Appeals for the Federal Circuit held that 37 CFR 1.28(c) is the sole provision governing the time for correction of the erroneous payment of the issue fee as a small entity. **See DH Technology v. Synergystex International, Inc. 154 F.3d 1333, 47 USPQ2d 1865 (Fed. Cir. Sept. 1, 1998).**

The Office no longer investigates or rejects original or reissue applications under 37 CFR 1.56. **1098 Off. Gaz. Pat. Office 502 (January 3, 1989)**. Therefore, nothing in this Notice is intended to imply that an investigation was done.

Your fee deficiency submission under 37 CFR 1.28 is hereby **ACCEPTED**.

This application is no longer entitled to small entity status. Accordingly, all future fees paid in this application must be paid at the large entity rate.

Inquiries related to this communication should be directed to the undersigned at (571) 272-1642.

/AMW/
April M. Wise
Petitions Examiner
Office of Petitions

UNITED STATES PATENT AND TRADEMARK OFFICE

UNITED STATES DEPARTMENT OF COMMERCE
United States Patent and Trademark Office
Address: COMMISSIONER FOR PATENTS
P.O. Box 1450
Alexandria, Virginia 22313-1450
www.uspto.gov

APPLICATION NO.	FILING DATE	FIRST NAMED INVENTOR	ATTORNEY DOCKET NO.	CONFIRMATION NO.
09/460,218	12/13/1999	ANTHONY A. ANTHONY	X2YA0110U-US	2204

92864 7590 03/26/2012

Kenneth C. Spafford
708 Smithson Avenue
Erie, PA 16511

EXAMINER	
JACKSON, STEPHEN W	

ART UNIT	PAPER NUMBER
2836	

NOTIFICATION DATE	DELIVERY MODE
03/26/2012	ELECTRONIC

Please find below and/or attached an Office communication concerning this application or proceeding.

The time period for reply, if any, is set in the attached communication.

Notice of the Office communication was sent electronically on above-indicated "Notification Date" to the following e-mail address(es):

kspafford@spaffordlaw.com
spaffordlaw@gmail.com

UNITED STATES PATENT AND TRADEMARK OFFICE

COMMISSIONER FOR PATENTS
UNITED STATES PATENT AND TRADEMARK OFFICE
P.O. BOX 1450
ALEXANDRIA, VA 22313-1450
www.uspto.gov

MAR 26 2012

In re Patent No. 6,331,926 B1 :
Issue Date: December 18, 2001 : **DECISION GRANTING**
Appl No.: 09/460,218 : **PETITION**
Filed: December 13, 1999 : *37 CFR 1.324*
For: PAIRED MULTI-LAYERED DIELECTRIC :
INDEPENDENT PASSIVE COMPONENT :
ARCHITECTURE RESULTING IN :
DIFFERENTIAL AND COMMON MODE :
FILTERING WITH SURGE PROTECTION IN
ONE INTEGRATED PACKAGE

This is a decision on the petition filed December 21, 2011 to correct inventorship under 37 CFR 1.324.

The petition is granted.

The patented file is being forwarded to Certificate of Corrections Branch for issuance of a certificate naming only the actual inventor or inventors.

/Jared Fureman/
Jared Fureman
Supervisory Patent Examiner
Art Unit 2836
Technology Center 2800

Kenneth C. Spafford
708 Smithson Avenue
Erie, PA 16511

UNITED STATES PATENT AND TRADEMARK OFFICE

Commissioner for Patents
United States Patent and Trademark Office
P.O. Box 1450
Alexandria, VA 22313-1450
www.uspto.gov
DIW Sep-11

Paper No. 10

MR. RYAN W. DUPUIS
ADE & COMPANY
1700-360 MAIN STREET
WINNIPEG MB R3C 3Z3
CANADA

MAILED
SEP 20 2011
OFFICE OF PETITIONS

In re Patent No. 6,244,992 :
Issue Date: 06/12/2001 :
Application Number: 09/461,225 : DECISION ON PETITION
Filing Date: 12/16/1999 :
For PORTABLE CALF STRETCHER :

This is a decision on the petition filed on August 12, 2011, under 37 CFR § 1.378(b) to accept the delayed payment of a maintenance fee for the above-identified patent.

The petition is **dismissed**.

If reconsideration of this decision is desired, a petition for reconsideration under 37 CFR 1.378(e) must be filed within TWO (2) MONTHS from the mail date of this decision. No extension of this 2-month time limit can be granted under 37 CFR 1.136(a) or (b). Any such petition for reconsideration must be accompanied by the petition fee of $400.00 as set forth in 37 CFR 1.17(f). The petition for reconsideration should include an exhaustive attempt to provide the lacking item(s) noted below, since, after a decision on the petition for reconsideration, no further reconsideration or review of the matter will be undertaken by the Director.

The patent issued June 21, 2001. The first maintenance fee was timely paid. The second maintenance fee could have been paid from June 12 through December 12, 2008, or, with a surcharge during the period from December 13, 2008, through June 12, 2009. Accordingly, the patent expired at midnight on June 12, 2009, for failure to timely submit the maintenance fee.

A petition to accept the delayed payment of a maintenance fee under 35 USC 41(c) and 37 CFR 1.378(b) must be accompanied by (1) an adequate, verified showing that the delay was unavoidable, since reasonable care was taken to ensure that the maintenance fee would be paid timely and that the petition was filed promptly after the patentee was notified of, or otherwise became aware of, the expiration of the patent, (2) payment of the appropriate maintenance fee, unless previously submitted, and (3) payment of the surcharge set forth in 37 CFR 1.20(i)(1).

At the outset, it is noted that the signature page of the petition is missing. While Page 4 of 4 containing the space for the statement of unavoidable delay, and the signature attesting to 37 CFR 1.378(d) has been provided and has been signed by inventor Allen G. James, page 3 of 4, including the signer's address and the request that the delayed payment of the maintenance fee be accepted and the patent be reinstated, is not among the papers received on August 12, 2011. Any renewed petition must include the **entire** petition form. A copy of the petition form is enclosed for petitioner's reference.

This petition lacks item (1) above.

Petitioner, patentee Allen James, asserts that the delay in payment of the maintenance fee was unavoidable due because patentee "assumed the next maintance (*sic*) fee was due from date of last payment, not from date of the patent being issued."[1]

A petition to accept the delayed maintenance fee under 35 U.S.C. § 41(c) and 37 CFR 1.378(b) must be accompanied by (1) an adequate, verified showing that the delay was unavoidable, since

[1] It is noted on the first page of the petition form that petitioner states that the subject patent is a reissue of original Patent No. 6,244,992, issued on June 12, 2001, original application number 09/461,225, original filing date December 16, 2009. A review of Office records, however, indicates that the subject patent is not a reissue patent.

reasonable care was taken to ensure that the maintenance fee would be paid timely and that the petition was filed promptly after the patentee was notified of, or otherwise became aware of, the expiration of the patent, (2) payment of the appropriate maintenance fee, unless previously submitted, and (3) payment of the surcharge set forth in 37 CFR 1.20(i)(1). This petition lacks requirement (1).

The Director may accept late payment of the maintenance fee if the delay is shown to the satisfaction of the Director to have been "unavoidable".[2]

The showing of record is inadequate to establish unavoidable delay within the meaning of 37 CFR 1.378(b)(3).

A late maintenance fee is considered under the same standard as that for reviving an abandoned application under 35 U.S.C. § 133 because 35 U.S.C. § 41(c)(1) uses identical language (i.e. "unavoidable delay").[3] Decisions reviving abandoned applications have adopted the reasonably prudent person standard in determining if the delay was unavoidable.[4] In this regard:

> The word 'unavoidable' . . . is applicable to ordinary human affairs, and requires no more or greater care or diligence than is generally used and observed by prudent and careful men in relation to their most important business. It permits them in the exercise of this care to rely upon the ordinary and trustworthy agencies of mail and telegraph, worthy and reliable employees, and such other means and instrumentalities as are usually employed in such important business. If unexpectedly, or through the unforeseen fault or imperfection of these agencies and instrumentalities, there occurs a failure, it may properly be said to be unavoidable, all other conditions of promptness in its rectification being present.[5]

---

[2] 35 U.S.C. § 41(c)(1).

[3] Ray v. Lehman, 55 F.3d 606, 608-09, 34 USPQ2d 1786, 1787 (Fed. Cir. 1995) (quoting In re Patent No. 4,409,763, 7 USPQ2d 1798, 1800 (Comm'r Pat. 1989)).

[4] Ex parte Pratt, 1887 Dec. Comm'r Pat. 31, 32-33 (Comm'r Pat. 1887)(the term "unavoidable" "is applicable to ordinary human affairs, and requires no more or greater care or diligence than is generally used by prudent and careful men in relation to their most important business").

[5] In re Mattullath, 38 App. D.C. 497, 514-15 (1912)(quoting Ex parte Pratt, 1887 Dec. Comm'r Pat. 31, 32-33 (1887)); see also Winkler v. Ladd, 221 F. Supp. 550, 552, 138 USPQ 666, 167-68 (D.D.C. 1963), aff'd, 143 USPQ 172 (D.C. Cir. 1963); Ex parte Henrich, 1913 Dec. Comm'r Pat. 139, 141 (1913). In addition, decisions on revival are made on a "case-by-case basis, taking all the facts and circumstances into account."

As 35 U.S.C. § 41(c) requires the payment of fees at specified intervals to maintain a patent in force, rather than some response to a specific action by the Office under 35 U.S.C. § 133, a reasonably prudent person in the exercise of due care and diligence would have taken steps to ensure the timely payment of such maintenance fees.[6] That is, an adequate showing that the delay was "unavoidable" within the meaning of 35 U.S.C. § 41(c) and 37 CFR 1.378(b)(3) requires a showing of the steps taken to ensure the timely payment of the maintenance fees for this patent.[7]

As 35 USC § 41(b) requires the payment of fees at specified intervals to maintain a patent in force, rather than some response to a specific action by the Office under 35 USC § 133, a reasonably prudent person in the exercise of due care and diligence would have taken steps to ensure the timely payment of such maintenance fees.[8] That is, an adequate showing that the delay in payment of the maintenance fee at issue was "unavoidable" within the meaning of 35 U.S.C. § 41(c) and 37 CFR 1.378(b)(3) requires a showing of the steps taken by the responsible party to ensure the timely payment of the second maintenance fee for this patent.[9]

35 U.S.C. § 41(c)(1) does not require an affirmative finding that the delay was avoidable, but only an explanation as to why the petitioner has failed to carry his or her burden to establish that the delay was unavoidable.[10] 35 U.S.C. § 133 does not require the Director to affirmatively find that the delay was avoidable, but only to explain why the applicant's petition was unavailing. Petitioner is reminded that it is the patentee's burden under the statutes and regulations to make a showing to the satisfaction of the Director that the delay in payment of a maintenance fee is unavoidable.[11]

Smith v. Mossinghoff, 671 F.2d 533, 538, 213 USPQ 977, 982 (D.C. Cir. 1982). Finally, a petition cannot be granted where a petitioner has failed to meet his or her burden of establishing that the delay was "unavoidable." Haines v. Quigg, 673 F. Supp. 314, 316-17, 5 USPQ2d 1130, 1131-32 (N.D. Ind. 1987).

[6] Ray, 55 F.3d at 609, 34 USPQ2d at 1788.

[7] Id.

[8] Ray, 55 F.3d at 609, 34 USPQ2d at 1788.

[9] Id.

[10] See Commissariat A. L'Energie Atomique v. Watson, 274 F.2d 594, 597, 124 USPQ 126, 128 (D.C. Cir. 1960).

[11] See Rydeen v. Quigg, 748 F. Supp. 900, 16 USPQ2d 1876 (D.D.C. 1990), aff'd 937 F.2d 623 (Fed. Cir. 1991)(table), *cert. denied*, 502 U.S. 1075 (1992); Ray v. Lehman, supra.

The showing of record has been considered, but is not persuasive. The showing of record is that payment of the second maintenance fee was delayed due to petitioner's lack of knowledge as to when the second maintenance fee was due. A patentee's lack of knowledge of the need to pay the maintenance fee, or, in this case, the date the maintenance fee is due, does not constitute unavoidable delay.[12] Under the statute and regulations, the Office has no duty to notify patentees of the requirement to pay maintenance fees or to notify patentees when the maintenance fees are due. Accordingly, it is solely the responsibility of the patentee to assure that the maintenance fee is timely paid to prevent expiration of the patent. The lack of knowledge of the requirement to pay a maintenance fee and/or the failure to receive the Maintenance Fee Reminder will not shift the burden of monitoring the time for paying a maintenance fee from the patentee to the Office.[13]

The showing of record does not support a finding of unavoidable delay. A delay resulting from a lack of knowledge or improper application of the patent statute, rules of practice, or the MPEP does not constitute an "unavoidable" delay.[14]

Petitioners should note that if this petition is not renewed, or if renewed and not granted, then the maintenance fee and post-expiration surcharge are refundable. The $400.00 petition fee for seeking reconsideration is not refundable. Any request for refund should be in writing to the address noted below.

Further correspondence with respect to this matter should be addressed as follows:

By mail: Mail Stop Petition
Commissioner for Patents
P.O. Box 1450
Alexandria, VA 22313-1450

By FAX: (571) 273-8300
Attn: Office of Petitions

---

[12] *See* Patent No. 4,409,763, *supra; see also* "Final Rules for Patent Maintenance Fees" 49 Fed. Reg. 34716, 34722-34723 (August 31, 1984), *reprinted in* 1046 Off. Gaz. Pat. Office 28, 34 (September 25, 1984).

[13] Rydeen v. Quigg, 748 F. supp. at 900.

[14] See Haines v. Quigg, 673 F. Supp. 314, 317, 5 USPQ 1130, 1132 (N.D. Ind. 1987), Vincent v. Mossinghoff, 230 USPQ 621, 624 (D.D.C. 1985); Smith v. Diamond, 209 USPQ 1091 (D.D.C. 1981); Potter v. Dann, 201 USPQ 574 (D.D.C. 1978); Ex parte Murray, 1891 Dec. Comm'r Pat. 130, 131 (1891).

By hand: Customer Service Window
Mail Stop Petition
Randolph Building
401 Dulany Street
Alexandria, VA 22314

Telephone inquiries should be directed to the undersigned at 571-272-3231.

Douglas I. Wood
Senior Petitions Attorney
Office of Petitions

Encl: PTO/SB/65

PTO/SB/65 (03-09)
Approved for use through 03/31/2012. OMB 0651-0016
U.S. Patent and Trademark Office; U.S. DEPARTMENT OF COMMERCE
Under the Paperwork Reduction Act of 1995, no persons are required to respond to a collection of information unless it displays a valid OMB control number.

PETITION TO ACCEPT UNAVOIDABLY DELAYED PAYMENT OF MAINTENANCE FEE IN AN EXPIRED PATENT (37 CFR 1.378(b))

Docket Number (Optional)

Mail to: Mail Stop Petition
Commissioner for Patents
P.O. Box 1450
Alexandria VA 22313-1450
Fax: (571) 273-8300

NOTE: If information or assistance is needed in completing this form, please contact Petitions Information at (571) 272-3282.

Patent Number: _____ Application Number: _____

Issue Date: _____ Filing Date: _____

CAUTION: Maintenance fee (and surcharge, if any) payment must correctly identify: (1) the patent number (or reissue patent number, if a reissue) and (2) the application number of the actual U.S. application (or reissue application) leading to issuance of that patent to ensure the fee(s) is/are associated with the correct patent. 37 CFR 1.366(c) and (d).

Also complete the following information, if applicable:

The above-identified patent:

☐ is a reissue of original Patent No. _____ original issue date _____;
original application number _____,
original filing date _____.

☐ resulted from the entry into the U.S. under 35 U.S.C. 371 of international application _____ filed on _____.

CERTIFICATE OF MAILING OR TRANSMISSION (37 CFR 1.8(a))

I hereby certify that this paper (along with any paper referred to as being attached or enclosed) is

(1) being deposited with the United States Postal Service on the date shown below with sufficient postage as first class mail in an envelope addressed to Mail Stop Petition, Commissioner for Patents, P.O. Box 1450, Alexandria, VA 22313-1450 OR

(2) transmitted by facsimile on the date shown below to the United States Patent and Trademark Office at (571) 273-8300.

_____ _____
Date Signature

_____
Typed or printed name of person signing Certificate

This collection of information is required by 37 CFR 1.378(b). The information is required to obtain or retain a benefit by the public which is to file (and by the USPTO to process) an application. Confidentiality is governed by 35 U.S.C. 122 and 37 CFR 1.11 and 1.14. This collection is estimated to take 8 hours to complete, including gathering, preparing, and submitting the completed application form to the USPTO. Time will vary depending upon the individual case. Any comments on the amount of time you require to complete this form and/or suggestions for reducing this burden, should be sent to the Chief Information Officer, U.S. Patent and Trademark Office, U.S. Department of Commerce, P.O. Box 1450, Alexandria, VA 22313-1450. DO NOT SEND FEES OR COMPLETED FORMS TO THIS ADDRESS. **SEND TO: Mail Stop Petition, Commissioner for Patents, P.O. Box 1450, Alexandria, VA 22313-1450.**

If you need assistance in completing the form, call 1-800-PTO-9199 and select option 2.

PTO/SB/65 (03-09)
Approved for use through 03/31/2012. OMB 0651-0016
U.S. Patent and Trademark Office; U.S. DEPARTMENT OF COMMERCE
Under the Paperwork Reduction Act of 1995, no persons are required to respond to a collection of information unless it displays a valid OMB control number.

1. SMALL ENTITY

☐ Patentee claims, or has previously claimed, small entity status. See 37 CFR 1.27

2. LOSS OF ENTITLEMENT TO SMALL ENTITY STATUS

☐ Patentee is no longer entitled to small entity status. See 37 CFR 1.27(g)

3. MAINTENANCE FEE (37 CFR 1.20(e)-(g))

The appropriate maintenance fee must be submitted with this petition, unless it was paid earlier.

NOT Small Entity			Small Entity		
Amount	Fee	(Code)	Amount	Fee	(Code)
☐ $ _____	3 ½ yr fee	(1551)	☐ $ _____	3 ½ yr fee	(2551)
☐ $ _____	7 ½ yr fee	(1552)	☐ $ _____	7 ½ yr fee	(2552)
☐ $ _____	11 ½ yr fee	(1553)	☐ $ _____	11 ½ yr fee	(2553)

MAINTENANCE FEE BEING SUBMITTED $ _____

4. SURCHARGE

The surcharge required by 37 CFR 1.20(i)(1) of $ _____ (Fee Code 1557) must be paid as a condition of accepting unavoidably delayed payment of the maintenance fee.

SURCHARGE FEE BEING SUBMITTED $ _____

5. MANNER OF PAYMENT

☐ Enclosed is a check for the sum of $ _____

☐ Please charge Deposit Account No. _____ the sum of $_____ .

☐ Payment by credit card. Form PTO-2038 is attached.

6. AUTHORIZATION TO CHARGE ANY FEE DEFICIENCY

☐ The Director is hereby authorized to charge any maintenance fee, surcharge or petition fee deficiency to Deposit Account No. _____ .

7. OVERPAYMENT

As to any overpayment made, please

☐ Credit to Deposit Account No. _____

OR

☐ Send refund check

WARNING:

Petitioner/applicant is cautioned to avoid submitting personal information in documents filed in a patent application that may contribute to identity theft. Personal information such as social security numbers, bank account numbers, or credit card numbers (other than a check or credit card authorization form PTO-2038 submitted for payment purposes) is never required by the USPTO to support a petition or an application. If this type of personal information is included in documents submitted to the USPTO, petitioners/applicants should consider redacting such personal information from the documents before submitting them to the USPTO. Petitioner/applicant is advised that the record of a patent application is available to the public after publication of the application (unless a non-publication request in compliance with 37 CFR 1.213(a) is made in the application) or issuance of a patent. Furthermore, the record from an abandoned application may also be available to the public if the application is referenced in a published application or an issued patent (see 37 CFR 1.14). Checks and credit card authorization forms PTO-2038 submitted for payment purposes are not retained in the application file and therefore are not publicly available.

8. SHOWING

The enclosed statement will show that the delay in timely payment of the maintenance fee was unavoidable since reasonable care was taken to ensure that the maintenance fee would be paid timely and that this petition is being filed promptly after the patentee was notified of, or otherwise became aware of, the expiration of the patent. The statement must enumerate the steps taken to ensure timely payment of the maintenance fee, the date and the manner in which the patentee became aware of the expiration of the patent, and the steps taken to file the petition promptly.

9. PETITIONER(S) REQUESTS THAT THE DELAYED PAYMENT OF THE MAINTENANCE FEE BE ACCEPTED AND THE PATENT REINSTATED.

Signature(s) of Petitioner(s)	Date
Typed or printed name(s)	Registration Number, if applicable
Address	Telephone Number
Address	

ENCLOSURES:

☐ Maintenance Fee Payment
☐ Statement why maintenance fee was not paid timely
☐ Surcharge under 37 CFR 1.20(i)(1) (fee for filing the maintenance fee petition)
☐ Other:

37 CFR 1.378(d) states: "Any petition under this section must be signed by an attorney or agent registered to practice before the Patent and Trademark Office, or by the patentee, the assignee, or other party in interest."

Signature	Date
Type or printed name	Registration Number, if applicable

STATEMENT

(In the space below, please provide the showing of unavoidable delay recited in paragraph 8 above.)

(Please attach additional sheets if additional space is needed)

Privacy Act Statement

The **Privacy Act of 1974 (P.L. 93-579)** requires that you be given certain information in connection with your submission of the attached form related to a patent application or patent. Accordingly, pursuant to the requirements of the Act, please be advised that: (1) the general authority for the collection of this information is 35 U.S.C. 2(b)(2); (2) furnishing of the information solicited is voluntary; and (3) the principal purpose for which the information is used by the U.S. Patent and Trademark Office is to process and/or examine your submission related to a patent application or patent. If you do not furnish the requested information, the U.S. Patent and Trademark Office may not be able to process and/or examine your submission, which may result in termination of proceedings or abandonment of the application or expiration of the patent.

The information provided by you in this form will be subject to the following routine uses:

1. The information on this form will be treated confidentially to the extent allowed under the Freedom of Information Act (5 U.S.C. 552) and the Privacy Act (5 U.S.C 552a). Records from this system of records may be disclosed to the Department of Justice to determine whether disclosure of these records is required by the Freedom of Information Act.

2. A record from this system of records may be disclosed, as a routine use, in the course of presenting evidence to a court, magistrate, or administrative tribunal, including disclosures to opposing counsel in the course of settlement negotiations.

3. A record in this system of records may be disclosed, as a routine use, to a Member of Congress submitting a request involving an individual, to whom the record pertains, when the individual has requested assistance from the Member with respect to the subject matter of the record.

4. A record in this system of records may be disclosed, as a routine use, to a contractor of the Agency having need for the information in order to perform a contract. Recipients of information shall be required to comply with the requirements of the Privacy Act of 1974, as amended, pursuant to 5 U.S.C. 552a(m).

5. A record related to an International Application filed under the Patent Cooperation Treaty in this system of records may be disclosed, as a routine use, to the International Bureau of the World Intellectual Property Organization, pursuant to the Patent Cooperation Treaty.

6. A record in this system of records may be disclosed, as a routine use, to another federal agency for purposes of National Security review (35 U.S.C. 181) and for review pursuant to the Atomic Energy Act (42 U.S.C. 218(c)).

7. A record from this system of records may be disclosed, as a routine use, to the Administrator, General Services, or his/her designee, during an inspection of records conducted by GSA as part of that agency's responsibility to recommend improvements in records management practices and programs, under authority of 44 U.S.C. 2904 and 2906. Such disclosure shall be made in accordance with the GSA regulations governing inspection of records for this purpose, and any other relevant (*i.e.*, GSA or Commerce) directive. Such disclosure shall not be used to make determinations about individuals.

8. A record from this system of records may be disclosed, as a routine use, to the public after either publication of the application pursuant to 35 U.S.C. 122(b) or issuance of a patent pursuant to 35 U.S.C. 151. Further, a record may be disclosed, subject to the limitations of 37 CFR 1.14, as a routine use, to the public if the record was filed in an application which became abandoned or in which the proceedings were terminated and which application is referenced by either a published application, an application open to public inspection or an issued patent.

9. A record from this system of records may be disclosed, as a routine use, to a Federal, State, or local law enforcement agency, if the USPTO becomes aware of a violation or potential violation of law or regulation.

UNITED STATES PATENT AND TRADEMARK OFFICE

Commissioner for Patents
United States Patent and Trademark Office
P.O. Box 1450
Alexandria, VA 22313-1450
www.uspto.gov

MAILED
NOV 21 2011
OFFICE OF PETITIONS

MR. RYAN W. DUPUIS
ADE & COMPANY
1700-360 MAIN STREET
WINNIPEG MB R3C 3Z3 CA CANADA

In re Patent No. 6,244,992	:	
Issue Date: June 12, 2001	:	
Application No. 09/461,225	:	DECISION ON REQUEST FOR REFUND
Filed: December 16, 1999	:	
Attorney Docket No. 84594-102/ME	:	

This is a decision on the Request For Refund filed November 3, 2011.

The request is **GRANTED**.

Applicant request a refund of the maintenance and petition fees paid on August 9, 2011, as the petition was dismissed.

A total of $2,005.00 paid on August 9, 2011, is being refund by check as requested.

Any questions concerning this matter may be directed to the undersigned at (571) 272-3208.

/KOC/
Karen Creasy
Petitions Examiner
Office of Petitions

APPROVED: /D.B./

IN THE UNITED STATES PATENT AND TRADEMARK OFFICE

Patent No. 6,526,515
Confirmation No. 3649
Issue Date .....February 25, 2003
Inventorship ..... Charles, Paul et al.
Applicant.....Tao Logic Systems LLC
Group Art Unit.....2185
Examiner ..... Butler, Dennis
Attorney's Docket No. TALS0065
Title: Remote Pluggable System Having Bays for Attachment of Computer Peripherals

REQUEST FOR CERTIFICATE OF CORRECTION

UNDER 37 CFR 1.323

To: Honorable Commissioner of Patents
P.O. Box 1450
Alexandria, VA 22313-1450

From: Allan T. Sponseller (Tel. 509-755-7255; Fax 509-755-7252)
Sadler, Breen, Morasch & Colby, p.s.
422 W. Riverside Avenue, Suite 424
Spokane, WA 99201

Customer No. 75671

Sir:

We respectfully request that a Certificate of Correction of Applicant's mistake be issued in accord with enclosed form PTO-1050. The errors listed in form PTO-1050 are believed to be of a clerical or typographical nature, or of minor character, which was not the fault of the Patent and Trademark Office. Further, the proposed corrections are not believed to constitute new matter or require reexamination. In addition, we are aware of the required fee set forth in 37 CFR 1.20(a) for providing a correction of applicant's mistake. Accordingly, the

Commissioner is hereby authorized to charge any fee or credit any overpayments to Deposit Account No. 50-4143 of Sadler, Breen, Morasch & Colby.

Respectfully Submitted,

Date: May 10, 2010

By: /Allan T. Sponseller, Reg. #38,318/

Allan T. Sponseller
Reg. No. 38,318
Attorney for Applicant
Sadler, Breen, Morasch & Colby, PS
422 W. Riverside Avenue, Suite 424
Spokane, Washington 99201
Telephone: (509) 755-7255
Facsimile: (509) 755-7252

PTO/SB/44 (09-07)
Approved for use through 08/31/2010. OMB 0651-0033
U.S. Patent and Trademark Office; U.S. DEPARTMENT OF COMMERCE
Under the Paperwork Reduction Act of 1995, no persons are required to respond to a collection of information unless it displays a valid OMB control number.
(Also Form PTO-1050)

UNITED STATES PATENT AND TRADEMARK OFFICE
CERTIFICATE OF CORRECTION

PATENT NO. : 6,526,515

APPLICATION NO.: 09/461,311

ISSUE DATE : February 25, 2003

INVENTOR(S) : Paul Charles et al.

It is certified that an error appears or errors appear in the above-identified patent and that said Letters Patent is hereby corrected as shown below:

In column 18, line 49, in Claim 1, delete "the primary power" and insert --a primary power--therefor.

In column 19, line 27, in Claim 7, delete "energy" and insert --power-- therefor.

In column 19, line 32, in Claim 8, delete "energy" and insert --power-- therefor.

In column 19, lines 35-36, in Claim 9, delete "the means for limiting" and insert --a means for limiting-- therefor.

In column 19, lines 49-50, in Claim 11, delete "computer" and insert --computing device-- therefor.

In column 19, line 53, in Claim 11, delete "computer and the computer peripheral" and insert -- computing device and the peripheral device-- therefor.

In column 19, line 54, in Claim 11, delete "a computer peripheral" and insert --the peripheral device-- therefor.

In column 20, lines 5-6, in Claim 16, delete "a computer peripheral" and insert --the peripheral device-- therefor.

In column 20, line 9, in Claim 17, delete "computer peripheral" and insert --peripheral device-- therefor.

In column 20, line 24, in Claim 20, after "the first peripheral" insert --device--.

MAILING ADDRESS OF SENDER (Please do not use customer number below):

This collection of information is required by 37 CFR 1.322, 1.323, and 1.324. The information is required to obtain or retain a benefit by the public which is to file (and by the USPTO to process) an application. Confidentiality is governed by 35 U.S.C. 122 and 37 CFR 1.14. This collection is estimated to take 1.0 hour to complete, including gathering, preparing, and submitting the completed application form to the USPTO. Time will vary depending upon the individual case. Any comments on the amount of time you require to complete this form and/or suggestions for reducing this burden, should be sent to the Chief Information Officer, U.S. Patent and Trademark Office, U.S. Department of Commerce, P.O. Box 1450, Alexandria, VA 22313-1450. DO NOT SEND FEES OR COMPLETED FORMS TO THIS ADDRESS. **SEND TO: Attention Certificate of Corrections Branch, Commissioner for Patents, P.O. Box 1450, Alexandria, VA 22313-1450.**

If you need assistance in completing the form, call 1-800-PTO-9199 and select option 2.

PTO/SB/44 (09-07)
Approved for use through 08/31/2010. OMB 0651-0033
U.S. Patent and Trademark Office; U.S. DEPARTMENT OF COMMERCE
Under the Paperwork Reduction Act of 1995, no persons are required to respond to a collection of information unless it displays a valid OMB control number.
(Also Form PTO-1050)

UNITED STATES PATENT AND TRADEMARK OFFICE
CERTIFICATE OF CORRECTION

PATENT NO. : 6,526,515

APPLICATION NO.: 09/461,311

ISSUE DATE : February 25, 2003

INVENTOR(S) : Paul Charles et al.

It is certified that an error appears or errors appear in the above-identified patent and that said Letters Patent is hereby corrected as shown below:

In column 20, line 27, in Claim 20, delete "the peripheral bay" and insert --the first peripheral bay-- therefor.

In column 20, line 32, in Claim 20, delete "the peripheral device" and insert --the first peripheral device-- therefor.

In column 20, line 36, in Claim 20, before "peripheral device" insert --first--.

In column 20, line 37, in Claim 20, delete "the peripheral in" and insert --the first peripheral device in-- therefor.

In column 20, line 39, in Claim 20, before "peripheral bay" insert --first--.

In column 20, line 41, in Claim 20, delete "a peripheral device" and insert --the first peripheral device-- therefor.

In column 20, line 45, in Claim 20, delete "computer and the" and insert --computing device and the first-- therefor.

In column 20, line 46, in Claim 20, delete "a computer peripheral" and insert --the first peripheral device-- therefor.

In column 20, line 50, Claim 21, before "peripheral bay" insert --first--.

MAILING ADDRESS OF SENDER (Please do not use customer number below):

This collection of information is required by 37 CFR 1.322, 1.323, and 1.324. The information is required to obtain or retain a benefit by the public which is to file (and by the USPTO to process) an application. Confidentiality is governed by 35 U.S.C. 122 and 37 CFR 1.14. This collection is estimated to take 1.0 hour to complete, including gathering, preparing, and submitting the completed application form to the USPTO. Time will vary depending upon the individual case. Any comments on the amount of time you require to complete this form and/or suggestions for reducing this burden, should be sent to the Chief Information Officer, U.S. Patent and Trademark Office, U.S. Department of Commerce, P.O. Box 1450, Alexandria, VA 22313-1450. DO NOT SEND FEES OR COMPLETED FORMS TO THIS ADDRESS. **SEND TO: Attention Certificate of Corrections Branch, Commissioner for Patents, P.O. Box 1450, Alexandria, VA 22313-1450.**

If you need assistance in completing the form, call 1-800-PTO-9199 and select option 2.

PTO/SB/44 (09-07)
Approved for use through 08/31/2010. OMB 0651-0033
U.S. Patent and Trademark Office; U.S. DEPARTMENT OF COMMERCE
Under the Paperwork Reduction Act of 1995, no persons are required to respond to a collection of information unless it displays a valid OMB control number.
(Also Form PTO-1050)

UNITED STATES PATENT AND TRADEMARK OFFICE
CERTIFICATE OF CORRECTION

PATENT NO. : 6,526,515

APPLICATION NO.: 09/461,311

ISSUE DATE : February 25, 2003

INVENTOR(S) : Paul Charles et al.

It is certified that an error appears or errors appear in the above-identified patent and that said Letters Patent is hereby corrected as shown below:

In column 21, line 2, in Claim 24, delete "a computing device" and insert --the computing device-- therefor.

In column 21, lines 17-18, in Claim 24, delete "computer" and insert --computing device-- therefor.

In column 21, line 21, in Claim 24, delete "computer" and insert --computing device-- therefor.

In column 21, lines 22-23, in Claim 24, delete "a computer peripheral is nested in the first peripheral bay" and insert --the peripheral device is nested in the means for removably housing the peripheral device-- therefor.

In column 22, line 3, in Claim 29, delete "energy" and insert --power-- therefor.

In column 22, line 8, in Claim 30, delete "energy" and insert --power-- therefor.

In column 22, line 15, in Claim 32, delete "first".

In column 22, lines 18-19, in Claim 33, delete "first peripheral bay" and insert --means for removably housing the peripheral device-- therefor.

In column 22, lines 22-23, in Claim 34, delete "the means" and insert --a means-- therefor.

In column 22, line 33, in Claim 37, before "ATAPI" insert --the--.

MAILING ADDRESS OF SENDER (Please do not use customer number below):

This collection of information is required by 37 CFR 1.322, 1.323, and 1.324. The information is required to obtain or retain a benefit by the public which is to file (and by the USPTO to process) an application. Confidentiality is governed by 35 U.S.C. 122 and 37 CFR 1.14. This collection is estimated to take 1.0 hour to complete, including gathering, preparing, and submitting the completed application form to the USPTO. Time will vary depending upon the individual case. Any comments on the amount of time you require to complete this form and/or suggestions for reducing this burden, should be sent to the Chief Information Officer, U.S. Patent and Trademark Office, U.S. Department of Commerce, P.O. Box 1450, Alexandria, VA 22313-1450. DO NOT SEND FEES OR COMPLETED FORMS TO THIS ADDRESS. **SEND TO: Attention Certificate of Corrections Branch, Commissioner for Patents, P.O. Box 1450, Alexandria, VA 22313-1450.**

If you need assistance in completing the form, call 1-800-PTO-9199 and select option 2.

SPE RESPONSE FOR CERTIFICATE OF CORRECTION

Paper No.:20120329-A

DATE : March 30, 2012

TO SPE OF : ART UNIT 2115

SUBJECT : Request for Certificate of Correction on Patent No.: 6526515

A response is requested with respect to the accompanying request for a certificate of correction.

Please complete this form and return with file, within **7** days to:
Certificates of Correction Branch - PK 3-910
Palm location **7590** - Tel. No. 305-8201

With respect to the change(s) requested, correcting Office and/or Applicant's errors, should the patent read as shown in the certificate of correction? No new matter should be introduced, nor should the scope or meaning of the claims be changed.

Thank You For Your Assistance **Certificates of Correction Branch**

The request for issuing the above-identified correction(s) is hereby:
Note your decision on the appropriate box.

☒ **Approved** **All** changes apply.

☐ **Approved in Part** Specify below which changes **do not** apply.

☐ **Denied** State the reasons for denial below.

Comments:

/Dennis Butler/

SPE: _____ **Art Unit**

UNITED STATES PATENT AND TRADEMARK OFFICE

Commissioner for Patents
United States Patent and Trademark Office
P.O. Box 1450
Alexandria, VA 22313-1450
www.uspto.gov

BUCHANAN, INGERSOLL & ROONEY PC
POST OFFICE BOX 1404
ALEXANDRIA, VA 22313-1404

MAILED

MAR 15 2011

OFFICE OF PETITIONS

In re Application of	:	
Peduto et al.	:	DECISION ON PETITION
Application No. 09/462,179	:	TO WITHDRAW
Filed: March 10, 2000	:	FROM RECORD
Attorney Docket No. 1022701-000854	:	

This is a decision on the Request to Withdraw as Attorney or agent of record under 37 C.F.R. § 1.36(b), filed March 14, 2011.

The request is **APPROVED**.

A grantable request to withdraw as attorney/agent of record must be signed by every attorney/agent seeking to withdraw or contain a clear indication that one attorney is signing on behalf of another/others. The Office will require the practitioner(s) to specify a reason and certify that he, she or they have: (1) given reasonable notice to the client, prior to the expiration of the reply period, which the practitioner(s) intends to withdraw from employment; (2) delivered to the client or a duly authorized representative of the client all papers and property (including funds) to which the client is entitled; and (3) notified the client of any replies that may be due and the time frame within which the client must respond, pursuant to 37 CFR 10.40 (c).

The request was signed by Teresa Stanek Rea on behalf of herself.

Teresa Stanek Rea has been withdrawn as attorney of record, however all other attorneys remain of record.

There are no outstanding Office actions that require a reply from the applicant.

As no change of correspondence address was indicated on the request, the address will remain unchanged.

Telephone inquires concerning this decision should be directed to the undersigned at (571) 272-6059.

Alicia Kelley
Petitions Examiner
Office of Petitions

UNITED STATES PATENT AND TRADEMARK OFFICE

Commissioner for Patents
United States Patent and Trademark Office
P.O. Box 1450
Alexandria, VA 22313-1450
www.uspto.gov

BUCHANAN, INGERSOLL & ROONEY, PC
POST OFFICE BOX 1404
ALEXANDRIA, VA 22313-1404

MAILED

APR 28 2011

OFFICE OF PETITIONS

In re Application of :
Nicolangelo Peduto, et. al. :
Application No. 09/462,179 : DECISION ON PETITION
Filed: March 10, 2000 : TO WITHDRAW FROM
Attorney Docket No. 1022701-000854 : RECORD

This is a decision on the Request to Withdraw as attorney or agent of record under 37 CFR §§ 1.36(b) or 10.40, filed March 17, 2011.

A review of the file record indicates that Theresa Stanek Rea was withdrawn from the above application on March 15, 2011[1]. Accordingly, the request to withdraw under 37 CFR §§ 1.36(b) or 10.40 filed on March 17, 2011, is **MOOT**.

There is an Office action mailed on April 1, 2011, that requires a reply from the applicant.

All future communications from the Office will continue to be directed to the address listed above until otherwise notified by applicant.

Telephone inquires concerning this decision should be directed to the undersigned at (571) 272-3226.

Andrea Smith
Petitions Examiner
Office of Petitions

[1] See Decision mailed March 15, 2011.

UNITED STATES PATENT AND TRADEMARK OFFICE

Commissioner for Patents
United States Patent and Trademark Office
P.O. Box 1450
Alexandria, VA 22313-1450
www.uspto.gov

ROTHWELL, FIGG, ERNST & MANBECK, PC
1425 K STREET, N.W.
SUITE 800
WASHINGTON DC 20005

MAILED
OCT 04 2011
OFFICE OF PETITIONS

In re Patent No. 6,726,890 :
Issue Date: April 27, 2004 :
Application No. 09/462,475 : NOTICE
Filed: January 14, 2000 :
Attorney Docket No. 108384-09007 :

This is a notice regarding your request for acceptance of a fee deficiency submission under 37 CFR 1.28. On September 1, 1998, the Court of Appeals for the Federal Circuit held that 37 CFR 1.28(c) is the sole provision governing the time for correction of the erroneous payment of the issue fee as a small entity. **See DH Technology v. Synergystex International, Inc. 154 F.3d 1333, 47 USPQ2d 1865 (Fed. Cir. Sept. 1, 1998).**

The Office no longer investigates or rejects original or reissue applications under 37 CFR 1.56. **1098 Off. Gaz. Pat. Office 502 (January 3, 1989).** Therefore, nothing in this Notice is intended to imply that an investigation was done.

Your fee deficiency submission under 37 CFR 1.28 is hereby **ACCEPTED.**

This application is no longer entitled to small entity status. Accordingly, all future fees paid in this application must be paid at the large entity rate.

Inquiries related to this communication should be directed to the undersigned at (571) 272-1642.

/AMW/
April M. Wise
Petitions Examiner
Office of Petitions

UNITED STATES PATENT AND TRADEMARK OFFICE

Commissioner for Patents
United States Patent and Trademark Office
P.O. Box 1450
Alexandria, VA 22313-1450
www.uspto.gov

In re Patent No. 6370196
Issue Date: April 9,2002
Application No. 09463787
Filed: March 27,2000
Attorney Docket No. 36719-221537

:
:DECISION GRANTING PETITION
:UNDER 37 CFR 1.378(c)
:

This is a decision on the electronic petition, filed March 8,2011 ,under 37 CFR 1.378(c) to accept the unintentionally delayed payment of the 7.5 year maintenance fee for the above-identified patent.

The petition is **GRANTED**.

The maintenance fee is accepted, and the above-identified patent reinstated as of March 8,2011 .
This decision also constitutes notice that the fee has been accepted. An electronic copy of the petition and this decision has been created as an entry in the Image File Wrapper. Nevertheless, petitioner should print and retain an independent copy.

Telephone inquiries related to this electronic decision should be directed to the Electronic Business Center at 1-866-217-9197.

PTO/SB/66 (03-09)
Approved for use through 03/31/2012. OMB 0651-0016
U.S. Patent and Trademark Office: U.S. DEPARTMENT OF COMMERCE
Under the Paperwork Reduction Act of 1995, no persons are required to respond to a collection of information unless it displays valid OMB control number.

PETITION TO ACCEPT UNINTENTIONALLY DELAYED PAYMENT OF MAINTENANCE FEE IN AN EXPIRED PATENT (37 CFR 1.378(c))

Patent Number	Issue Date (YYYY-MM-DD)	Application Number	Filing Date (YYYY-MM-DD)	Docket Number (if applicable)
6370196	2002-04-09	09463787	2000-03-27	36719-221537

CAUTION: Maintenance fee (and surcharge, if any) payment must correctly identify: (1) the patent number and (2) the application number of the actual U.S. application leading to issuance of that patent to ensure the fee(s) is/are associated with the correct patent. 37 CFR 1.366(c) and (d).

SMALL ENTITY

☒ Patentee claims, or has previously claimed, small entity status. See 37 CFR 1.27.

LOSS OF ENTITLEMENT TO SMALL ENTITY STATUS

☐ Patentee is no longer entitled to small entity status. See 37 CFR 1.27(g)

NOT Small Entity	Fee	Code	Small Entity	Fee	Code
○	3 ½ year	(1551)	○	3 ½ year	(2551)
○	7 ½ year	(1552)	◉	7 ½ year	(2552)
○	11 ½ year	(1553)	○	11 ½ year	(2553)

SURCHARGE

The surcharge required by 37 CFR 1.20(i)(2) (Fee Code 1558) must be paid as a condition of accepting unintentionally delayed payment of the maintenance fee.

MAINTENANCE FEE (37 CFR 1.20(e)-(g))

The appropriate maintenance fee must be submitted with this petition.

STATEMENT

THE UNDERSIGNED CERTIFIES THAT THE DELAY IN PAYMENT OF THE MAINTENANCE FEE TO THIS PATENT WAS UNINTENTIONAL

PETITIONER(S) REQUEST THAT THE DELAYED PAYMENT OF THE MAINTENANCE FEE BE ACCEPTED AND THE PATENT REINSTATED

THIS PORTION MUST BE COMPLETED BY THE SIGNATORY OR SIGNATORIES

37 CFR 1.378(d) states: "Any petition under this section must be signed by an attorney or agent registered to practice before the Patent and Trademark Office, or by the patentee, the assignee, or other party in interest."

I certify, in accordance with 37 CFR 1.4(d)(4) that I am

◉ An attorney or agent registered to practice before the Patent and Trademark Office

○ A sole patentee

○ A joint patentee; I certify that I am authorized to sign this submission on behalf of all the other patentees.

○ A joint patentee; all of whom are signing this e-petition

○ The assignee of record of the entire interest

PTO/SB/66 (03-09)
Approved for use through 03/31/2012. OMB 0651-0016
U.S. Patent and Trademark Office: U.S. DEPARTMENT OF COMMERCE
Under the Paperwork Reduction Act of 1995, no persons are required to respond to a collection of information unless it displays valid OMB control number.

Patent Practitioner			
A signature of the applicant or representative is required in accordance with 37 CFR 1.33 and 10.18. Please see 37 CFR 1.4(d) for the form of the signature			
Signature	/Jeffri A. Kaminski/	Date (YYYY-MM-DD)	2011-03-08
Name	Jeffri A. Kaminski	Registration Number	42709

This collection of information is required by 37 CFR 1.378(c). The information is required to obtain or retain a benefit by the public which is to file (and by the USPTO to process) an application. Confidentiality is governed by 35 U.S.C. 122 and 37 CFR 1.11 and 1.14. This collection is estimated to take 1 hour to complete, including gathering, preparing, and submitting the completed application form to the USPTO. Time will vary depending upon the individual case. Any comments on the amount of time you require to complete this form and/ or suggestions for reducing this burden, should be sent to the Chief Information Officer, U.S. Patent and Trademark Office, U.S. Department of Commerce, P.O. Box 1450, Alexandria, VA 22313-1450. DO NOT SEND FEES OR COMPLETED FORMS TO THIS ADDRESS. **This form can only be used when in conjunction with EFS-Web. If this form is mailed to the USPTO, it may cause delays in reinstating the patent.**

Privacy Act Statement

The Privacy Act of 1974 (P.L. 93-579) requires that you be given certain information in connection with your submission of the attached form related to a patent application or patent. Accordingly, pursuant to the requirements of the Act, please be advised that: (1) the general authority for the collection of this information is 35 U.S.C. 2(b)(2); (2) furnishing of the information solicited is voluntary; and (3) the principal purpose for which the information is used by the U.S. Patent and Trademark Office is to process and/or examine your submission related to a patent application or patent. If you do not furnish the requested information, the U.S. Patent and Trademark Office may not be able to process and/or examine your submission, which may result in termination of proceedings or abandonment of the application or expiration of the patent.

The information provided by you in this form will be subject to the following routine uses:

1. The information on this form will be treated confidentially to the extent allowed under the Freedom of Information Act (5 U.S.C. 552) and the Privacy Act (5 U.S.C. 552a). Records from this system of records may be disclosed to the Department of Justice to determine whether the Freedom of Information Act requires disclosure of these records.

2. A record from this system of records may be disclosed, as a routine use, in the course of presenting evidence to a court, magistrate, or administrative tribunal, including disclosures to opposing counsel in the course of settlement negotiations.

3. A record in this system of records may be disclosed, as a routine use, to a Member of Congress submitting a request involving an individual, to whom the record pertains, when the individual has requested assistance from the Member with respect to the subject matter of the record.

4. A record in this system of records may be disclosed, as a routine use, to a contractor of the Agency having need for the information in order to perform a contract. Recipients of information shall be required to comply with the requirements of the Privacy Act of 1974, as amended, pursuant to 5 U.S.C. 552a(m).

5. A record related to an International Application filed under the Patent Cooperation Treaty in this system of records may be disclosed, as a routine use, to the International Bureau of the World Intellectual Property Organization, pursuant to the Patent Cooperation Treaty.

6. A record in this system of records may be disclosed, as a routine use, to another federal agency for purposes of National Security review (35 U.S.C. 181) and for review pursuant to the Atomic Energy Act (42 U.S.C. 218(c)).

7. A record from this system of records may be disclosed, as a routine use, to the Administrator, General Services, or his/her designee, during an inspection of records conducted by GSA as part of that agency's responsibility to recommend improvements in records management practices and programs, under authority of 44 U.S.C. 2904 and 2906. Such disclosure shall be made in accordance with the GSA regulations governing inspection of records for this purpose, and any other relevant (i.e., GSA or Commerce) directive. Such disclosure shall not be used to make determinations about individuals.

8. A record from this system of records may be disclosed, as a routine use, to the public after either publication of the application pursuant to 35 U.S.C. 122(b) or issuance of a patent pursuant to 35 U.S.C. 151. Further, a record may be disclosed, subject to the limitations of 37 CFR 1.14, as a routine use, to the public if the record was filed in an application which became abandoned or in which the proceedings were terminated and which application is referenced by either a published application, an application open to public inspections or an issued patent.

9. A record from this system of records may be disclosed, as a routine use, to a Federal, State, or local law enforcement agency, if the USPTO becomes aware of a violation or potential violation of law or regulation.

UNITED STATES PATENT AND TRADEMARK OFFICE

Commissioner for Patents
United States Patent and Trademark Office
P.O. Box 1450
Alexandria, VA 22313-1450
www.uspto.gov

In re Patent No. 6350736
Issue Date: February 26,2002
Application No. 09464516
Filed: December 15,1999
Attorney Docket No. 12152.15USC2

:
:DECISION GRANTING PETITION
:UNDER 37 CFR 1.378(c)
:

This is a decision on the electronic petition, filed September 22,2011 ,under 37 CFR 1.378(c) to accept the unintentionally delayed payment of the 7.5 year maintenance fee for the above-identified patent.

The petition is **GRANTED**.

The maintenance fee is accepted, and the above-identified patent reinstated as of September 22,2011 . This decision also constitutes notice that the fee has been accepted. An electronic copy of the petition and this decision has been created as an entry in the Image File Wrapper. Nevertheless, petitioner should print and retain an independent copy.

Telephone inquiries related to this electronic decision should be directed to the Electronic Business Center at 1-866-217-9197.

PTO/SB/66 (03-09)
Approved for use through 03/31/2012. OMB 0651-0016
U.S. Patent and Trademark Office: U.S. DEPARTMENT OF COMMERCE
Under the Paperwork Reduction Act of 1995, no persons are required to respond to a collection of information unless it displays valid OMB control number.

PETITION TO ACCEPT UNINTENTIONALLY DELAYED PAYMENT OF MAINTENANCE FEE IN AN EXPIRED PATENT (37 CFR 1.378(c))

Patent Number	Issue Date (YYYY-MM-DD)	Application Number	Filing Date (YYYY-MM-DD)	Docket Number (if applicable)
6,350,736	2002-02-26	09/464,516	1999-12-15	379887

CAUTION: Maintenance fee (and surcharge, if any) payment must correctly identify: (1) the patent number and (2) the application number of the actual U.S. application leading to issuance of that patent to ensure the fee(s) is/are associated with the correct patent. 37 CFR 1.366(c) and (d).

SMALL ENTITY

☒ Patentee claims, or has previously claimed, small entity status. See 37 CFR 1.27.

LOSS OF ENTITLEMENT TO SMALL ENTITY STATUS

☐ Patentee is no longer entitled to small entity status. See 37 CFR 1.27(g)

NOT Small Entity	Fee	Code	Small Entity	Fee	Code
○	3 ½ year	(1551)	○	3 ½ year	(2551)
○	7 ½ year	(1552)	◉	7 ½ year	(2552)
○	11 ½ year	(1553)	○	11 ½ year	(2553)

SURCHARGE

The surcharge required by 37 CFR 1.20(i)(2) (Fee Code 1558) must be paid as a condition of accepting unintentionally delayed payment of the maintenance fee.

MAINTENANCE FEE (37 CFR 1.20(e)-(g))

The appropriate maintenance fee must be submitted with this petition.

STATEMENT

THE UNDERSIGNED CERTIFIES THAT THE DELAY IN PAYMENT OF THE MAINTENANCE FEE TO THIS PATENT WAS UNINTENTIONAL

PETITIONER(S) REQUEST THAT THE DELAYED PAYMENT OF THE MAINTENANCE FEE BE ACCEPTED AND THE PATENT REINSTATED

THIS PORTION MUST BE COMPLETED BY THE SIGNATORY OR SIGNATORIES

37 CFR 1.378(d) states: "Any petition under this section must be signed by an attorney or agent registered to practice before the Patent and Trademark Office, or by the patentee, the assignee, or other party in interest."

I certify, in accordance with 37 CFR 1.4(d)(4) that I am

○ An attorney or agent registered to practice before the Patent and Trademark Office

○ A sole patentee

○ A joint patentee; I certify that I am authorized to sign this submission on behalf of all the other patentees.

○ A joint patentee; all of whom are signing this e-petition

◉ The assignee of record of the entire interest

PTO/SB/66 (03-09)
Approved for use through 03/31/2012. OMB 0651-0016
U.S. Patent and Trademark Office: U.S. DEPARTMENT OF COMMERCE
Under the Paperwork Reduction Act of 1995, no persons are required to respond to a collection of information unless it displays valid OMB control number.

The Assignee of record of the entire interest			
Under 37 CFR 3.71 an assignee becomes of record by filing a statement in compliance with 37 CFR 3.73(b). Signature requirements are set forth in 37 CFR 1.4(d), and the undersigned certifies that he / she is empowered to act on behalf of the assignee of the entire interest			
Signature	/Fatih M. Uckun/	Date (YYYY-MM-DD)	2011-09-19
Name	Fatih M. Uckun		
Enter Reel and Frame Number		Remove	
Reel Number	022764	Frame Number	0812
Click ADD for additional Reel Number and Frame Number		Add	

This collection of information is required by 37 CFR 1.378(c). The information is required to obtain or retain a benefit by the public which is to file (and by the USPTO to process) an application. Confidentiality is governed by 35 U.S.C. 122 and 37 CFR 1.11 and 1.14. This collection is estimated to take 1 hour to complete, including gathering, preparing, and submitting the completed application form to the USPTO. Time will vary depending upon the individual case. Any comments on the amount of time you require to complete this form and/ or suggestions for reducing this burden, should be sent to the Chief Information Officer, U.S. Patent and Trademark Office, U.S. Department of Commerce, P.O. Box 1450, Alexandria, VA 22313-1450. DO NOT SEND FEES OR COMPLETED FORMS TO THIS ADDRESS. **This form can only be used when in conjunction with EFS-Web. If this form is mailed to the USPTO, it may cause delays in reinstating the patent.**

Privacy Act Statement

The Privacy Act of 1974 (P.L. 93-579) requires that you be given certain information in connection with your submission of the attached form related to a patent application or patent. Accordingly, pursuant to the requirements of the Act, please be advised that: (1) the general authority for the collection of this information is 35 U.S.C. 2(b)(2); (2) furnishing of the information solicited is voluntary; and (3) the principal purpose for which the information is used by the U.S. Patent and Trademark Office is to process and/or examine your submission related to a patent application or patent. If you do not furnish the requested information, the U.S. Patent and Trademark Office may not be able to process and/or examine your submission, which may result in termination of proceedings or abandonment of the application or expiration of the patent.

The information provided by you in this form will be subject to the following routine uses:

1. The information on this form will be treated confidentially to the extent allowed under the Freedom of Information Act (5 U.S.C. 552) and the Privacy Act (5 U.S.C. 552a). Records from this system of records may be disclosed to the Department of Justice to determine whether the Freedom of Information Act requires disclosure of these records.

2. A record from this system of records may be disclosed, as a routine use, in the course of presenting evidence to a court, magistrate, or administrative tribunal, including disclosures to opposing counsel in the course of settlement negotiations.

3. A record in this system of records may be disclosed, as a routine use, to a Member of Congress submitting a request involving an individual, to whom the record pertains, when the individual has requested assistance from the Member with respect to the subject matter of the record.

4. A record in this system of records may be disclosed, as a routine use, to a contractor of the Agency having need for the information in order to perform a contract. Recipients of information shall be required to comply with the requirements of the Privacy Act of 1974, as amended, pursuant to 5 U.S.C. 552a(m).

5. A record related to an International Application filed under the Patent Cooperation Treaty in this system of records may be disclosed, as a routine use, to the International Bureau of the World Intellectual Property Organization, pursuant to the Patent Cooperation Treaty.

6. A record in this system of records may be disclosed, as a routine use, to another federal agency for purposes of National Security review (35 U.S.C. 181) and for review pursuant to the Atomic Energy Act (42 U.S.C. 218(c)).

7. A record from this system of records may be disclosed, as a routine use, to the Administrator, General Services, or his/her designee, during an inspection of records conducted by GSA as part of that agency's responsibility to recommend improvements in records management practices and programs, under authority of 44 U.S.C. 2904 and 2906. Such disclosure shall be made in accordance with the GSA regulations governing inspection of records for this purpose, and any other relevant (i.e., GSA or Commerce) directive. Such disclosure shall not be used to make determinations about individuals.

8. A record from this system of records may be disclosed, as a routine use, to the public after either publication of the application pursuant to 35 U.S.C. 122(b) or issuance of a patent pursuant to 35 U.S.C. 151. Further, a record may be disclosed, subject to the limitations of 37 CFR 1.14, as a routine use, to the public if the record was filed in an application which became abandoned or in which the proceedings were terminated and which application is referenced by either a published application, an application open to public inspections or an issued patent.

9. A record from this system of records may be disclosed, as a routine use, to a Federal, State, or local law enforcement agency, if the USPTO becomes aware of a violation or potential violation of law or regulation.

UNITED STATES PATENT AND TRADEMARK OFFICE

Commissioner for Patents
United States Patent and Trademark Office
P.O. Box 1450
Alexandria, VA 22313-1450
www.uspto.gov

JAMES HILDEBRANDT
94 HOPKINS LANE
UNIT CEDARS H
ORLEANS MA 02653

MAILED
DEC 12 2011
OFFICE OF PETITIONS

In re Patent No. 6,313,992
Issue Date: November 6, 2001 :
Application No. 09/465,428 : DECISION ON PETITION
Filed: December 21, 1999 :
Patentee: James Hildebrandt :

This is a decision on the petition under 37 CFR 1.137(b), filed November 5, 2011, which is being treated as a petition under 37 CFR 1.378(c) to accept the unintentionally delayed payment of the maintenance fee for the above-identified patent.

The petition under 37 CFR 1.378(c) is **GRANTED**.

The above-identified patent issued November 6, 2001. Accordingly, the second maintenance fee could have been paid during the period from November 6, 2008 through May 6, 2009 without surcharge, or with a late payment surcharge during the period from May 7, 2009 through November 6, 2009. No maintenance fee having been received, the patent expired on November 7, 2009.

Since the instant petition was filed within twenty-four months after the six-month grace period provided in 37 CFR 1.362(e), and the maintenance fee and surcharge timely filed within twenty-four months, the petition was timely filed under the provisions of 37 CFR 1.378(c). The maintenance fee in this case is accepted and the above-identified patent is hereby reinstated as of the mail date of this decision.

Telephone inquiries specific to this decision may be directed to the undersigned at (571)272-3207.

Cliff Congo
Petitions Attorney
Office of Petitions

UNITED STATES PATENT AND TRADEMARK OFFICE

Commissioner for Patents
United States Patent and Trademark Office
P.O. Box 1450
Alexandria, VA 22313-1450
www.uspto.gov

Date : November 8, 2010

Patent No. :6224824
Ser. No. :09465575
Inventor(s) : Jun Shan Zhang et al.
Issued :May 1, 2001
Title :METHOD OF USING ALLOY STEEL HAVING SUPERIOR CORROSION
:RESISTANCE IN CORROSIVE ENVIRONMENT CONTAINING MOLTEN
:SALTS CONTAINING ALKALI OXIDES

Re: Request for Certificate of Correction

Consideration has been given your request for the issuance of a certificate of correction for the above-identified patent under the provisions of Rule(s) 1.322 and/or 1.323.

Assignees' names and addresses (assignment data) printed in a patent, are based *solely* on information supplied in the appropriate space for identifying the assignment data, i.e., item 3 of the Issue Fee Transmittal Form PTOL-85B. Granting of a request under 37 CFR 3.81(b) is required to correct applicant's error providing ***incorrect or erroneous*** assignment data, *before* issuance of a Certificate of Correction, under 37 CFR 1.323 *(see Manual of Patent Examining Procedures (M.P.E.P) Chp.1400, sect. 1481).* This procedure is required *at any time after the issue fee is paid,* including after issuance of the patent.

In view of the foregoing, your request, in this matter, is hereby denied.

A request to correct the Assignee under 37 CFR 3.81(b) should include:

A. **the processing fee set forth in 37 CFR 1. 17(i) (currently $130);**
B. a statement that the failure to include the correct assignee name on the PTOL-85B was inadvertent; and
C. a copy of the Notice of Recordation of Assignment Document, reflecting the reel and frame number where the assignment(s) is recorded and/or reflecting proof of *the date* the assignment was submitted for recordation.

In the Request, Applicant(s) may request that the file be forwarded to Certificates of Correction Branch, for issuance of a Certificate of Correction, if the Request is granted.

Any request under 37 CFR 3.81(b) should be directed to the following address or facsimile number:

By mail: Mail Stop PETITIONS

	Commissioner for Patents Post Office Box 1450 Alexandria, VA 22313-1450
By hand:	Customer Service Window Mail Stop Petitions Randolph Building 401 Dulany Street Alexandria, VA 22314
By fax:	(703) 872-9306 ATTN: Office of Petitions
Electronic Filing	uspto.gov/ebc/index.html (must be registered as an e-filer to submit responses) Support 1-866-217-9197 571-272-4100

If a fee (currently $100) was previously submitted for consideration of a Request for Certificate of Correction, under CFR 1.323, to correct assignment data, an additional fee is required.

For Mary Diggs
Decisions & Certificates
of Correction Branch
(703) 756-1580 or (703) 756- 1541

Bachman & Lapointe, P.C.
900 Chapel Street, Ste 1201
New Haven, CT

/arg

UNITED STATES PATENT AND TRADEMARK OFFICE

Commissioner for Patents
United States Patent and Trademark Office
P.O. Box 1450
Alexandria, VA 22313-1450
www.uspto.gov

Date : 10/14/2010
Patent No. : 7,763,589 B2
Serial No. : 09/466,035
Inventor(s) : Sallberg et al.
Issued : July 27, 2010
Title : **COMPOSITIONS AND METHODS FOR TREATING INTRACELLULAR DISEASES**
Docket No. : **930049.458C1**

Re: Request for Reconsideration

Consideration has been given your request for the issuance of a certificate of correction for the above-identified patent under the provisions of 37 CFR 1.322 and/or 1.323.

Assignees' names and addresses (assignment data) printed in a patent are based *solely* on information supplied in the appropriate space for identifying the assignment data, i.e., item 3 of the Fee(s) Transmittal Form PTOL-85B. After payment of the issue fee, correction of assignment data submitted on the PTOL-85B can only be done by Certificate of Correction under 37 CFR 1.323, with a request under 37 CFR 3.81(b).

A request for a patent to be corrected to state the name of the assignee must:

A. state that the assignment was submitted for recordation as set forth in 37 CFR 3.11 before issuance of the patent;
B. include a request for a certificate of correction under 37 CFR 1.323 along with the fee set forth in 37 CFR 1.20(a); and
C. include the processing fee set forth in 37 CFR 1.17(i).

If the request is granted, Certificates of Correction Branch will be notified that a Certificate of Correction may be issued.
See Manual of Patent Examining Procedure, Section 1481.01 (Rev. 3) (Oct. 2005).

Applicant has not included items A and or C above, accordingly, the request for Certificate of Correction to add or change the assignee data is dismissed.

Any request under 37 CFR 3.81(b) should be directed to the following address or facsimile number:

By mail:	Mail Stop PETITIONS Commissioner for Patents Post Office Box 1450 Alexandria, VA 22313-1450
By hand:	Customer Service Window Mail Stop Petitions Randolph Building 401 Dulany Street Alexandria, VA 22314
By fax:	571-273-8300 ATTN: Office of Petitions

If a fee (currently $100) was previously submitted for consideration of a Request for Certificate of Correction, under CFR 1.323, to correct assignment data, no additional fee is required.

A certificate of correction will be issued for the remaining errors noted in your request.

Ernest C. White, *LIE*
ernest.white@uspto.gov
(571) 272-3385
For Mary F. Diggs (703) 756-1580
Decisions & Certificates
of Correction Branch

NOVARTIS VACCINES AND DIAGNOSTICS INC.
INTELLECTUAL PROPERTY- X100B
P.O. BOX 8097
Emeryville CA 94662-8097

ecw

UNITED STATES PATENT AND TRADEMARK OFFICE

Commissioner for Patents
United States Patent and Trademark Office
P.O. Box 1450
Alexandria, VA 22313-1450
www.uspto.gov

ROBERT P. REIFF
P. O. BOX 5
FT. ATKINSON WI 53538

MAILED
MAY 11 2011
OFFICE OF PETITIONS

In re Patent No. 6,232,577
Issue Date: May 15, 2001
Application No. 09/466,489
Filed: December 17, 1999
Title of Invention: **APPARATUS AND METHOD FOR HEATING COLD ENGINES**

ON PETITION

This decision is in response to the petition filed April 15, 2011 under 37 CFR 1.378(b) which is treated under 37 CFR 1.378(c) to accept and record a maintenance fee for the above-identified patent.[1]

The petition is **GRANTED.**

The patent issued on May 15, 2001. The second maintenance fee due could have been paid during the period from May 15, 2008 to November 17, 2008 or, with a surcharge during the period from November 18, 2008 to May 15, 2009. Accordingly, this patent expired on May 15, 2009, for failure to timely remit the maintenance fee.

Accordingly, the maintenance fee in this case is hereby accepted and the above-identified patent is hereby reinstated as of the mail date of this decision. Fees in the amount of $1,240.00 for the second maintenance fee and $1,640.00 for the surcharge have been applied.

Telephone inquiries concerning this matter may be directed to the undersigned Petitions Attorney at (571) 272-3212.

Patricia Faison-Ball
Senior Petitions Attorney
Office of Petitions

[1]While the text indicates the delay was unintentional, and while the appropriate fees were paid with the petition, the wrong petitions form was used. Nevertheless, the petition was appropriately treated under 37 CFR 1.378(c).

UNITED STATES PATENT AND TRADEMARK OFFICE

Commissioner for Patents
United States Patent and Trademark Office
P.O. Box 1450
Alexandria, VA 22313-1450
www.uspto.go

MAILED

JUL 25 2011

OFFICE OF PETITIONS

JOHN J WELCH JR. ESQ.
8 E CENTER STREET
RUTLAND VT 05739

In re Patent No. 6,254,307
Issue Date: July 3, 2001
Application No. 09/466,850
Filed: December 20, 1999
For: BI-PARTITE SLUICEWAY APPARATUS WITH SILT REMOVAL TRAY COMPONENTS

ON PETITION

This is a decision on the petition under 37 CFR 1.378(c), filed July 1, 2011, to accept the unintentionally delayed payment of a maintenance fee for the above-identified patent. This is also a decision on the request filed July 8, 2011, to withdraw the above petition filed July 1, 2011, and a request for refund.

The petition under 37 CFR 1.378(c) is **dismissed** as moot.

The petition is dismissed as moot in view of the request filed July 8, 2011, to withdraw the petition filed July 1, 2011, and to refund the petition and maintenance fees paid on June 27, 2011.

As to the request for refund:

The request for refund of the petition and maintenance fees paid on June 27, 2011 is granted. A total of $2,880.00 paid on June 27, 2011, is being refunded by check as requested.

Telephone inquiries concerning this decision should be directed to the undersigned at (571) 272-3208.

The application is being referred to the Files Repository.

/KOC/
Karen Creasy
Petitions Examiner
Office of Petitions

UNITED STATES PATENT AND TRADEMARK OFFICE

Commissioner for Patents
United States Patent and Trademark Office
P.O. Box 1450
Alexandria, VA 22313-1450
www.uspto.gov

MAILED

AUG 03 2010

OFFICE OF PETITIONS

ERICSSON INC.
6300 LEGACY DRIVE
M/S EVR 1-C-11
PLANO TX 75024

In re Application of	:	
Anders Hoff et al	:	
Application No. 09/467,420	:	DECISION ON PETITION
Filed: December 20, 1999	:	
Attorney Docket No. P12217-US1	:	

This is a decision on the petition, filed August 13, 2002, and supplemented on August 26, 2008, under 37 CFR 1.181 (no fee) requesting withdrawal of the holding of abandonment in the above-identified application.

The petition is **DISMISSED**.

The Office regrets the delay in replying to the above matter.

Any request for reconsideration of this decision should be filed within two (2) months from the mail date of this decision. *Note* 37 CFR 1.181(f). The request for reconsideration should include a cover letter and be entitled as a "Renewed Petition under 37 CFR 1.181 to Withdraw the Holding of Abandonment."

This application was held abandoned for failure to timely pay the issue fee and submit corrected drawings in reply to the Notice of Allowance and Notice of Allowability mailed February 25, 2002, which set a three (3) month shortened statutory period for reply. A Notice of Abandonment was mailed on July 10, 2002.

Applicant files the present petition and declaration of Jennifer E. Garth, asserting that the Notice of Allowance and Notice of Allowability mailed February 25, 2002, was not received by Applicants' attorneys' law firm, Jenkens & Gilchrist. The declaration also states that "A review of the docket and file in the above matter indicates that the Notice of Allowability and the Notice of Allowance and Issue Fee Due were never received by me nor was it ever entered into the Jenkens and Gilchrist docketing system for action to be taken." The declaration further states

that a hard copy of the computer docket record for the above-referenced application was attached. However the Office is not in receipt of the above.

Applicable Law, Rules and MPEP

The MPEP 711.03(c)A, Petition To Withdraw Holding of Abandonment Based on Failure To Receive Office Action, provides

> In Delgar v. Schulyer, 172 USPQ 513 (D.D.C. 1971), the court decided that the Office should mail a new Notice of Allowance in view of the evidence presented in support of the contention that the applicant's representative did not receive the original Notice of Allowance. Under the reasoning of Delgar, an allegation that an Office action was never received may be considered in a petition to withdraw the holding of abandonment. If adequately supported, the Office may grant the petition to withdraw the holding of abandonment and remail the Office action. That is, the reasoning of Delgar is applicable regardless of whether an application is held abandoned for failure to timely pay the issue fee (35 U.S.C. 151) or for failure to prosecute (35 U.S.C. 133).
> To minimize costs and burdens to practitioners and the Office, the Office has modified the showing required to establish nonreceipt of an Office action. The showing required to establish nonreceipt of an Office communication must include a statement from the practitioner describing the system used for recording an Office action received at the correspondence address of record with the USPTO. The statement should establish that the docketing system is sufficiently reliable. It is expected that the record would include, but not be limited to, the application number, attorney docket number, the mail date of the Office action and the due date for the response.
> Practitioner must state that the Office action was not received at the correspondence address of record, and that a search of the practitioner's record(s), including any file jacket or the equivalent, and the application contents, indicates that the Office action was not received. A copy of the record(s) used by the practitioner where the non-received Office action would have been entered had it been received is required.
> A copy of the practitioner's record(s) required to show non-receipt of the Office action should include the master docket for the firm. That is, if a three month period for reply was set in the nonreceived Office action, a copy of the master docket report showing all replies docketed for a date three months from the mail date of the nonreceived Office action must be submitted as documentary proof of nonreceipt of the Office action. If no such master docket exists, the practitioner should so state and provide other evidence such as, but not limited to, the following: the application file jacket; incoming mail log; calendar; reminder system; or the individual docket record for the application in question.
> The showing outlined above may not be sufficient if there are circumstances that point to a conclusion that the Office action may have been lost after receipt rather than a conclusion that the Office action was lost in the mail (e.g., if the practitioner has a history of not receiving Office actions). (Emphasis supplied).

Analysis/conclusion

Regrettably, the petition is not grantable at this time. The Office requirements for granting a petition to withdraw the holding of abandonment based upon non -receipt of an Office communication have been modified. A copy of the practitioner's record(s) required to show non-receipt of the Office action should include the master docket for the firm. That is, if a three month period for reply was set in the nonreceived Office action, a copy of the master docket report showing all replies docketed for a date three months from the mail date of the nonreceived Office action must be submitted as documentary proof of nonreceipt of the Office action. If no such master docket exists, the practitioner should so state and provide other evidence such as, but not limited to, the following: the application file jacket; incoming mail log; calendar; reminder system; or the individual docket record for the application in question.

Accordingly, absent the required evidence to establish nonreceipt of the Notice of Allowance and Notice of Allowability mailed February 25, 2002, the petition requesting withdrawal of the holding of abandonment cannot be granted at this time.

If petitioner cannot supply the evidence necessary to withdraw the holding of abandonment, or simply does not wish to, petitioner should consider filing a petition under 37 CFR 1.137(b) stating that the delay was unintentional. Public Law 97-247, § 3, 96 Stat. 317 (1982), which revised patent and trademark fees, amended 35 U.S.C. § 41(a)(7) to provide for the revival of an "unintentionally" abandoned application without a showing that the delay in prosecution or in late payment of the issue fee was "unavoidable." This amendment to 35 U.S.C. § 41(a)(7) has been implemented in 37 CFR 1.137(b). An "unintentional" petition under 37 CFR 1.137(b) must be accompanied by the $1,620.00 petition fee.

The filing of a petition under 37 CFR 1.137(b) cannot be intentionally delayed and therefore must be filed promptly. A person seeking revival due to unintentional delay cannot make a statement that the delay was unintentional unless the entire delay, including the date it was discovered that the application was abandoned until the filing of the petition to revive under 37 CFR 1.137(b), was unintentional. A statement that the delay was unintentional is not appropriate if petitioner intentionally delayed the filing of a petition for revival under 37 CFR 1.137(b).

Further correspondence with respect to this matter should be delivered through one of the following mediums:

By mail: Mail Stop PETITIONS
Commissioner for Patents
Post Office Box 1450
Alexandria, VA 22313-1450

By hand:	Customer Service Window Mail Stop Petitions Randolph Building 401 Dulany Street Alexandria, VA 22314
By fax:	(571) 273-8300 ATTN: Office of Petitions
By internet:	EFS-Web www.uspto.gov/ebc/efs_help.html (for help using EFS-Web call the Patent Electronic Business Center at (866) 217-9197)

Any questions concerning this matter may be directed to the undersigned at (571) 272-3208.

/KOC/
Karen Creasy
Petitions Examiner
Office of Petitions

UNITED STATES PATENT AND TRADEMARK OFFICE

Commissioner for Patents
United States Patent and Trademark Office
P.O. Box 1450
Alexandria, VA 22313-1450
www.uspto.gov

11

ERICSSON INC.
6300 LEGACY DRIVE
M/S EVR 1-C-11
PLANO TX 75024

MAILED

AUG 03 2010

OFFICE OF PETITIONS

In re Application of	:	
Anders Hoff et al	:	
Application No. 09/467,420	:	DECISION ON PETITION
Filed: December 20, 1999	:	
Attorney Docket No. P12217-US1	:	

This is a decision on the petition, filed August 13, 2002, and supplemented on August 26, 2008, under 37 CFR 1.181 (no fee) requesting withdrawal of the holding of abandonment in the above-identified application.

The petition is **DISMISSED**.

The Office regrets the delay in replying to the above matter.

Any request for reconsideration of this decision should be filed within two (2) months from the mail date of this decision. *Note* 37 CFR 1.181(f). The request for reconsideration should include a cover letter and be entitled as a "Renewed Petition under 37 CFR 1.181 to Withdraw the Holding of Abandonment."

This application was held abandoned for failure to timely pay the issue fee and submit corrected drawings in reply to the Notice of Allowance and Notice of Allowability mailed February 25, 2002, which set a three (3) month shortened statutory period for reply. A Notice of Abandonment was mailed on July 10, 2002.

Applicant files the present petition and declaration of Jennifer E. Garth, asserting that the Notice of Allowance and Notice of Allowability mailed February 25, 2002, was not received by Applicants' attorneys' law firm, Jenkens & Gilchrist. The declaration also states that "A review of the docket and file in the above matter indicates that the Notice of Allowability and the Notice of Allowance and Issue Fee Due were never received by me nor was it ever entered into the Jenkens and Gilchrist docketing system for action to be taken." The declaration further states

that a hard copy of the computer docket record for the above-referenced application was attached. However the Office is not in receipt of the above.

Applicable Law, Rules and MPEP

The MPEP 711.03(c)A, Petition To Withdraw Holding of Abandonment Based on Failure To Receive Office Action, provides

> In Delgar v. Schulyer, 172 USPQ 513 (D.D.C. 1971), the court decided that the Office should mail a new Notice of Allowance in view of the evidence presented in support of the contention that the applicant's representative did not receive the original Notice of Allowance. Under the reasoning of Delgar, an allegation that an Office action was never received may be considered in a petition to withdraw the holding of abandonment. If adequately supported, the Office may grant the petition to withdraw the holding of abandonment and remail the Office action. That is, the reasoning of Delgar is applicable regardless of whether an application is held abandoned for failure to timely pay the issue fee (35 U.S.C. 151) or for failure to prosecute (35 U.S.C. 133).
> To minimize costs and burdens to practitioners and the Office, the Office has modified the showing required to establish nonreceipt of an Office action. The showing required to establish nonreceipt of an Office communication must include a statement from the practitioner describing the system used for recording an Office action received at the correspondence address of record with the USPTO. The statement should establish that the docketing system is sufficiently reliable. It is expected that the record would include, but not be limited to, the application number, attorney docket number, the mail date of the Office action and the due date for the response.
> Practitioner must state that the Office action was not received at the correspondence address of record, and that a search of the practitioner's record(s), including any file jacket or the equivalent, and the application contents, indicates that the Office action was not received. A copy of the record(s) used by the practitioner where the non-received Office action would have been entered had it been received is required.
> A copy of the practitioner's record(s) required to show non-receipt of the Office action should include the master docket for the firm. That is, if a three month period for reply was set in the nonreceived Office action, a copy of the master docket report showing all replies docketed for a date three months from the mail date of the nonreceived Office action must be submitted as documentary proof of nonreceipt of the Office action. If no such master docket exists, the practitioner should so state and provide other evidence such as, but not limited to, the following: the application file jacket; incoming mail log; calendar; reminder system; or the individual docket record for the application in question.
> The showing outlined above may not be sufficient if there are circumstances that point to a conclusion that the Office action may have been lost after receipt rather than a conclusion that the Office action was lost in the mail (e.g., if the practitioner has a history of not receiving Office actions). (Emphasis supplied).

Analysis/conclusion

Regrettably, the petition is not grantable at this time. The Office requirements for granting a petition to withdraw the holding of abandonment based upon non -receipt of an Office communication have been modified. A copy of the practitioner's record(s) required to show non-receipt of the Office action should include the master docket for the firm. That is, if a three month period for reply was set in the nonreceived Office action, a copy of the master docket report showing all replies docketed for a date three months from the mail date of the nonreceived Office action must be submitted as documentary proof of nonreceipt of the Office action. If no such master docket exists, the practitioner should so state and provide other evidence such as, but not limited to, the following: the application file jacket; incoming mail log; calendar; reminder system; or the individual docket record for the application in question.

Accordingly, absent the required evidence to establish nonreceipt of the Notice of Allowance and Notice of Allowability mailed February 25, 2002, the petition requesting withdrawal of the holding of abandonment cannot be granted at this time.

If petitioner cannot supply the evidence necessary to withdraw the holding of abandonment, or simply does not wish to, petitioner should consider filing a petition under 37 CFR 1.137(b) stating that the delay was unintentional. Public Law 97-247, § 3, 96 Stat. 317 (1982), which revised patent and trademark fees, amended 35 U.S.C. § 41(a)(7) to provide for the revival of an "unintentionally" abandoned application without a showing that the delay in prosecution or in late payment of the issue fee was "unavoidable." This amendment to 35 U.S.C. § 41(a)(7) has been implemented in 37 CFR 1.137(b). An "unintentional" petition under 37 CFR 1.137(b) must be accompanied by the $1,620.00 petition fee.

The filing of a petition under 37 CFR 1.137(b) cannot be intentionally delayed and therefore must be filed promptly. A person seeking revival due to unintentional delay cannot make a statement that the delay was unintentional unless the entire delay, including the date it was discovered that the application was abandoned until the filing of the petition to revive under 37 CFR 1.137(b), was unintentional. A statement that the delay was unintentional is not appropriate if petitioner intentionally delayed the filing of a petition for revival under 37 CFR 1.137(b).

Further correspondence with respect to this matter should be delivered through one of the following mediums:

By mail: Mail Stop PETITIONS
Commissioner for Patents
Post Office Box 1450
Alexandria, VA 22313-1450

By hand:	Customer Service Window Mail Stop Petitions Randolph Building 401 Dulany Street Alexandria, VA 22314
By fax:	(571) 273-8300 ATTN: Office of Petitions
By internet:	EFS-Web www.uspto.gov/ebc/efs_help.html (for help using EFS-Web call the Patent Electronic Business Center at (866) 217-9197)

Any questions concerning this matter may be directed to the undersigned at (571) 272-3208.

/KOC/
Karen Creasy
Petitions Examiner
Office of Petitions

Commissioner for Patents
United States Patent and Trademark Office
P.O. Box 1450
Alexandria, VA 22313-1450
www.uspto.gov

MAILED

DEC 16 2010

OFFICE OF PETITIONS

ERICSSON INC.
6300 LEGACY DRIVE
M/S EVR 1-C-11
PLANO TX 75024

In re Application of :
Anders Hoff et al :
Application No. 09/467,420 : ON PETITION
Filed: December 20, 1999 :
Attorney Docket No. P12217-US1 :

This is a decision on the petition under the unintentional provisions of 37 CFR 1.137(b), filed August 17, 2010, to revive the above-identified application.

The petition is **DISMISSED**.

Any request for reconsideration of this decision must be submitted within TWO (2) MONTHS from the mail date of this decision. Extensions of time under 37 CFR 1.136(a) are permitted. The reconsideration request should include a cover letter entitled "Renewed Petition under 37 CFR 1.137(b)." This is **not** a final agency action within the meaning of 5 U.S.C. § 704.

The application became abandoned for failure to timely pay the issue fee and submit corrected drawings in reply to the Notice of Allowance and Notice of Allowability mailed February 25, 2002, which set a three (3) month shortened statutory period for reply. A Notice of Abandonment was mailed on July 10, 2002.

A grantable petition under 37 CFR 1.137(b) must be accompanied by: (1) the required reply, unless previously filed; (2) the petition fee as set forth in 37 CFR 1.17(m); (3) a statement that the entire delay in filing the required reply from the due date for the reply until the filing of a grantable petition pursuant to 37 CFR 1.137(b) was unintentional; and (4) any terminal disclaimer (and fee as set forth in 37 CFR 1.20(d)) required by 37 CFR 1.137(d). Where there is a question as to whether either the abandonment or the delay in filing a petition under 37 CFR 1.137 was unintentional, the Director may require additional information. See MPEP 711.03(c)(II)(C) and (D). The instant petition lacks item(s) (1) .

The Office is not in receipt of the corrected drawings as required in the Notice of Allowability mailed February 25, 2002. Applicant was notified of the above in the decision mailed August 3, 2010.

Further correspondence with respect to this matter should be delivered through one of the following mediums:

By mail:	Mail Stop PETITIONS Commissioner for Patents Post Office Box 1450 Alexandria, VA 22313-1450
By hand:	Customer Service Window Mail Stop Petitions Randolph Building 401 Dulany Street Alexandria, VA 22314
By fax:	(571) 273-8300 ATTN: Office of Petitions
By internet:	EFS-Web www.uspto.gov/ebc/efs_help.html (for help using EFS-Web call the Patent Electronic Business Center at (866) 217-9197)

Any questions concerning this matter may be directed to the undersigned at (571) 272-3208.

/KOC/
Karen Creasy
Petitions Examiner
Office of Petitions

UNITED STATES PATENT AND TRADEMARK OFFICE

Commissioner for Patents
United States Patent and Trademark Office
P.O. Box 1450
Alexandria, VA 22313-1450
www.uspto.gov

ERICSSON INC.
6300 LEGACY DRIVE
M/S EVR 1-C-11
PLANO TX 75024

MAILED

MAR 23 2011

OFFICE OF PETITIONS

In re Application of :
Anders Hoff et al :
Application No. 09/467,420 : DECISION ON PETITION
Filed: December 20, 1999 :
Attorney Docket No. P12217-US1 :

This is a decision on the renewed petition under the unintentional provisions of 37 CFR 1.137(b), filed February 16, 2011, to revive the above-identified application.

The petition is **GRANTED**.

The petition satisfies the conditions for revival pursuant to the provisions of 37 CFR 1.137(b) in that (1) the reply in the form of replacement drawings; (2) the petition fee; and (3) the required statement of unintentional delay have been received. Accordingly, the reply to the Notice of Allowance/Notice of Allowability mailed February 25, 2002, is accepted as having been unintentionally delayed.

Telephone inquiries concerning this decision should be directed to the undersigned at (571) 272-3208.

This application is being referred to the Office of Data Management to be processed into a patent and for review of the drawings received with the petition on February 16, 2011.

/KOC/
Karen Creasy
Petitions Examiner
Office of Petitions

UNITED STATES PATENT AND TRADEMARK OFFICE

Commissioner for Patents
United States Patent and Trademark Office
P.O. Box 1450
Alexandria, VA 22313-1450
www.uspto.gov

LIFE TECHNOLOGIES CORPORATION
C/O INTELLEVATE
P.O. BOX 52050
MINNEAPOLIS MN 55402

MAILED

MAR 08 2011

OFFICE OF PETITIONS

In re Patent of Bolger et al. :
Patent No. 6,511,815 :
Issued: January 28, 2003 : NOTICE
Application No. 09/467,628 :
Filed: December 20, 1999 :
Attorney Docket No. PANVERA.003.

This is a notice regarding your request for acceptance of a fee deficiency submission under 37 CFR 1.28, filed February 4, 2011.

The Office no longer investigates or rejects original or reissue patent under 37 CFR 1.56. **1098 Off. Gaz. Pat. Office 502 (January 3, 1989)**. Therefore, nothing in this Notice is intended to imply that an investigation was done.

Your fee deficiency submission under 37 CFR 1.28 is hereby **ACCEPTED**.

This patent is no longer entitled to small entity status. Accordingly, all future fees paid in this patent must be paid at the large entity rate.

The file does not indicate a change of address has been submitted, although the address given on the petition differs from the address of record. If appropriate, a change of fee address (form PTO/SB/47) and a request for customer number (form PTO/SB/125) should be filed in accordance with Manual of Patent Examining Procedure, section 2540. A courtesy copy of this decision is being mailed to the address on the petition. However, the Office will mail all future correspondence solely to the address of record.

Inquiries related to this communication should be directed to the undersigned at (571) 272-3230.

Shirene Willis Brantley

Shirene Willis Brantley
Senior Petitions Attorney
Office of Petitions

CC: LIFE TECHNOLOGIES CORPORATION
INTELLECTUAL PROPERTY DEPT
5981 VAN ALLEN WAY
CARLSBAD, CA 92008

UNITED STATES PATENT AND TRADEMARK OFFICE

Commissioner for Patents
United States Patent and Trademark Office
P.O. Box 1450
Alexandria, VA 22313-1450
www.uspto.gov

In re Patent No. 6312671
Issue Date: November 6,2001
Application No. 09468280
Filed: December 20,1999
Attorney Docket No. 7678.453

:
:DECISION GRANTING PETITION
:UNDER 37 CFR 1.378(c)
:

This is a decision on the electronic petition, filed July 20,2011 ,under 37 CFR 1.378(c) to accept the unintentionally delayed payment of the 7.5 year maintenance fee for the above-identified patent.

The petition is **GRANTED**.

The maintenance fee is accepted, and the above-identified patent reinstated as of July 20,2011 .
This decision also constitutes notice that the fee has been accepted. An electronic copy of the petition and this decision has been created as an entry in the Image File Wrapper. Nevertheless, petitioner should print and retain an independent copy.

Telephone inquiries related to this electronic decision should be directed to the Electronic Business Center at 1-866-217-9197.

PTO/SB/66 (03-09)
Approved for use through 03/31/2012. OMB 0651-0016
U.S. Patent and Trademark Office: U.S. DEPARTMENT OF COMMERCE
Under the Paperwork Reduction Act of 1995, no persons are required to respond to a collection of information unless it displays valid OMB control number.

PETITION TO ACCEPT UNINTENTIONALLY DELAYED PAYMENT OF MAINTENANCE FEE IN AN EXPIRED PATENT (37 CFR 1.378(c))

Patent Number	Issue Date (YYYY-MM-DD)	Application Number	Filing Date (YYYY-MM-DD)	Docket Number (if applicable)
6312671	2001-11-06	09468280	1999-12-20	7678.453

CAUTION: Maintenance fee (and surcharge, if any) payment must correctly identify: (1) the patent number and (2) the application number of the actual U.S. application leading to issuance of that patent to ensure the fee(s) is/are associated with the correct patent. 37 CFR 1.366(c) and (d).

SMALL ENTITY

☐ Patentee claims, or has previously claimed, small entity status. See 37 CFR 1.27.

LOSS OF ENTITLEMENT TO SMALL ENTITY STATUS

☐ Patentee is no longer entitled to small entity status. See 37 CFR 1.27(g)

NOT Small Entity			Small Entity		
	Fee	Code		Fee	Code
○	3 ½ year	(1551)	○	3 ½ year	(2551)
◉	7 ½ year	(1552)	○	7 ½ year	(2552)
○	11 ½ year	(1553)	○	11 ½ year	(2553)

SURCHARGE

The surcharge required by 37 CFR 1.20(i)(2) (Fee Code 1558) must be paid as a condition of accepting unintentionally delayed payment of the maintenance fee.

MAINTENANCE FEE (37 CFR 1.20(e)-(g))

The appropriate maintenance fee must be submitted with this petition.

STATEMENT

THE UNDERSIGNED CERTIFIES THAT THE DELAY IN PAYMENT OF THE MAINTENANCE FEE TO THIS PATENT WAS UNINTENTIONAL

PETITIONER(S) REQUEST THAT THE DELAYED PAYMENT OF THE MAINTENANCE FEE BE ACCEPTED AND THE PATENT REINSTATED

THIS PORTION MUST BE COMPLETED BY THE SIGNATORY OR SIGNATORIES

37 CFR 1.378(d) states: "Any petition under this section must be signed by an attorney or agent registered to practice before the Patent and Trademark Office, or by the patentee, the assignee, or other party in interest."

I certify, in accordance with 37 CFR 1.4(d)(4) that I am

◉ An attorney or agent registered to practice before the Patent and Trademark Office

○ A sole patentee

○ A joint patentee; I certify that I am authorized to sign this submission on behalf of all the other patentees.

○ A joint patentee; all of whom are signing this e-petition

○ The assignee of record of the entire interest

PTO/SB/66 (03-09)
Approved for use through 03/31/2012. OMB 0651-0016
U.S. Patent and Trademark Office: U.S. DEPARTMENT OF COMMERCE
Under the Paperwork Reduction Act of 1995, no persons are required to respond to a collection of information unless it displays valid OMB control number.

Patent Practitioner			
A signature of the applicant or representative is required in accordance with 37 CFR 1.33 and 10.18. Please see 37 CFR 1.4(d) for the form of the signature			
Signature	/John M. Guynn 36153/	Date (YYYY-MM-DD)	2011-07-20
Name	John M. Guynn	Registration Number	36153

This collection of information is required by 37 CFR 1.378(c). The information is required to obtain or retain a benefit by the public which is to file (and by the USPTO to process) an application. Confidentiality is governed by 35 U.S.C. 122 and 37 CFR 1.11 and 1.14. This collection is estimated to take 1 hour to complete, including gathering, preparing, and submitting the completed application form to the USPTO. Time will vary depending upon the individual case. Any comments on the amount of time you require to complete this form and/ or suggestions for reducing this burden, should be sent to the Chief Information Officer, U.S. Patent and Trademark Office, U.S. Department of Commerce, P.O. Box 1450, Alexandria, VA 22313-1450. DO NOT SEND FEES OR COMPLETED FORMS TO THIS ADDRESS. **This form can only be used when in conjunction with EFS-Web. If this form is mailed to the USPTO, it may cause delays in reinstating the patent.**

Privacy Act Statement

The Privacy Act of 1974 (P.L. 93-579) requires that you be given certain information in connection with your submission of the attached form related to a patent application or patent. Accordingly, pursuant to the requirements of the Act, please be advised that: (1) the general authority for the collection of this information is 35 U.S.C. 2(b)(2); (2) furnishing of the information solicited is voluntary; and (3) the principal purpose for which the information is used by the U.S. Patent and Trademark Office is to process and/or examine your submission related to a patent application or patent. If you do not furnish the requested information, the U.S. Patent and Trademark Office may not be able to process and/or examine your submission, which may result in termination of proceedings or abandonment of the application or expiration of the patent.

The information provided by you in this form will be subject to the following routine uses:

1. The information on this form will be treated confidentially to the extent allowed under the Freedom of Information Act (5 U.S.C. 552) and the Privacy Act (5 U.S.C. 552a). Records from this system of records may be disclosed to the Department of Justice to determine whether the Freedom of Information Act requires disclosure of these records.

2. A record from this system of records may be disclosed, as a routine use, in the course of presenting evidence to a court, magistrate, or administrative tribunal, including disclosures to opposing counsel in the course of settlement negotiations.

3. A record in this system of records may be disclosed, as a routine use, to a Member of Congress submitting a request involving an individual, to whom the record pertains, when the individual has requested assistance from the Member with respect to the subject matter of the record.

4. A record in this system of records may be disclosed, as a routine use, to a contractor of the Agency having need for the information in order to perform a contract. Recipients of information shall be required to comply with the requirements of the Privacy Act of 1974, as amended, pursuant to 5 U.S.C. 552a(m).

5. A record related to an International Application filed under the Patent Cooperation Treaty in this system of records may be disclosed, as a routine use, to the International Bureau of the World Intellectual Property Organization, pursuant to the Patent Cooperation Treaty.

6. A record in this system of records may be disclosed, as a routine use, to another federal agency for purposes of National Security review (35 U.S.C. 181) and for review pursuant to the Atomic Energy Act (42 U.S.C. 218(c)).

7. A record from this system of records may be disclosed, as a routine use, to the Administrator, General Services, or his/her designee, during an inspection of records conducted by GSA as part of that agency's responsibility to recommend improvements in records management practices and programs, under authority of 44 U.S.C. 2904 and 2906. Such disclosure shall be made in accordance with the GSA regulations governing inspection of records for this purpose, and any other relevant (i.e., GSA or Commerce) directive. Such disclosure shall not be used to make determinations about individuals.

8. A record from this system of records may be disclosed, as a routine use, to the public after either publication of the application pursuant to 35 U.S.C. 122(b) or issuance of a patent pursuant to 35 U.S.C. 151. Further, a record may be disclosed, subject to the limitations of 37 CFR 1.14, as a routine use, to the public if the record was filed in an application which became abandoned or in which the proceedings were terminated and which application is referenced by either a published application, an application open to public inspections or an issued patent.

9. A record from this system of records may be disclosed, as a routine use, to a Federal, State, or local law enforcement agency, if the USPTO becomes aware of a violation or potential violation of law or regulation.

UNITED STATES PATENT AND TRADEMARK OFFICE

Commissioner for Patents
United States Patent and Trademark Office
P.O. Box 1450
Alexandria, VA 22313-1450
www.uspto.gov

ZIOLKOWSKI PATENT SOLUTIONS GROUP, SC (GEMS)
136 S WISCONSIN ST
PORT WASHINGTON WI 53074

MAILED
MAR 09 2011
OFFICE OF PETITIONS

In re Application of :
Singh et al. :
Application No. 09/468,403 :
Filed: December 20, 1999 : DECISION
Attorney Docket No. GEMS8081.024 :
For: Method and Apparatus for Screening :
Transactions Across a Global Computer :
Network :

The above-identified application has been forwarded to the undersigned for consideration of a petition for patent term extension entitled "Petition Under 37 CFR 1.701 and 37 CFR 1.181 Requesting Calculation of Patent Term Extension Under 35 U.S.C. 154(b)" received on August 27, 2010.

The petition is **dismissed**.

Background

Petitioner asserts that the application was filed on December 20, 1999 and that more than ten years after the filing date the Notice of Allowability was mailed by the Office. Petitioner asserts that the patent to be issued from the above identified application is entitled to a patent term extension as the application was under appellate review for 2689 days. Petitioner asserts that the Notice of Allowance and Issue Fee(s) Due Notice, included a determination that the patent term extension was 0 days, is in error, as the application is entitled patent term extension.

Petitioner asserts that the application was under appellate review since at least March 31, 2003, when Applicant filed a Notice of Appeal. Petitioner asserts that the application was improperly abandoned on October 5, 2006, as the Appeal Brief had been properly filed. Petitioner asserts that a petition to withdraw the abandonment was filed on November 2, 2006, followed by a Status Inquiry letter filed on April 22, 2008, and a renewed petition to withdraw the holding of abandonment filed on October 15, 2009, which finally resulted in a decision withdrawing the holding of the abandonment mailed on April 29, 2010.

Petitioner asserts that as the appeal to the BPAI was filed on March 3, 2003 and the date on which a final decision in favor of Applicant was August 27, 2010, the application was under appellate review for 2734 days and that Petitioner requests appropriate Patent Term Extension.

On December 20, 1999, the above identified application was received by the Office.

On July 30, 2003, a copy of the Notice of Appeal was received by the Office.

On June 5, 2003, an Appeal Brief was received by the Office.

On October 20, 2003, a Non-Final Office Action was mailed by the Office.

On December 16, 2003, a request to reinstate the Appeal and Appeal Brief was received by the Office.

On August 3, 2005, a Notification of Non-Compliant Appeal Brief was mailed by the Office.

On August 19, 2005, an Appeal Brief was received by the Office.

On October 5, 2006, a Notice of Abandonment was mailed by the Office.

On November 2, 2006, a petition to withdraw the holding of abandonment was received by the Office.

On October 15, 2009, a petition to withdraw the holding of abandonment was received by the Office.

On August 10, 2010, a Notice of Allowance and Issue Fee(s) Due notice, which included a determination that the patent term extension was zero (0) days, was mailed by the Office.

Applicable Statutes and Regulation

35 U.S.C. 154. Contents and term of patent (in effect on June 8, 1995)

(b) TERM EXTENSION.-

(1) INTERFERENCE DELAY OR SECRECY ORDERS.-If the issue of an original patent is delayed due to a proceeding under section 135(a) of this title, or because the application for patent is placed under an order pursuant to section 181 of this title, the term of the patent shall be extended for the period of delay, but in no case more than 5 years.

(2) EXTENSION FOR APPELLATE REVIEW.-If the issue of a patent is delayed due to appellate review by the Board of Patent Appeals and Interferences or by a Federal court and the patent is issued pursuant to a decision in the review reversing an adverse

determination of patentability, the term of the patent shall be extended for a period of time but in no case more than 5 years. A patent shall not be eligible for extension under this paragraph if it is subject to a terminal disclaimer due to the issue of another patent claiming subject matter that is not patentably distinct from that under appellate review.

37 CFR 1.701 Extension of patent term due to examination delay under the Uruguay Round Agreements Act (original applications, other than designs, filed on or after June 8, 1995, and before May 29, 2000).

(a) A patent, other than for designs, issued on an application filed on or after June 8, 1995, is entitled to extension of the patent term if the issuance of the patent was delayed due to:

(1) Interference proceedings under 35 U.S.C. 135(a); and/or

(2) The application being placed under a secrecy order under 35 U.S.C. 181; and/or

(3) Appellate review by the Board of Patent Appeals and Interferences or by a Federal court under 35 U.S.C. 141 or 145, if the patent was issued pursuant to a decision in the review reversing an adverse determination of patentability and if the patent is not subject to a terminal disclaimer due to the issuance of another patent claiming subject matter that is not patentably distinct from that under appellate review. If an application is remanded by a panel of the Board of Patent Appeals and Interferences and the remand is the last action by a panel of the Board of Patent Appeals and Interferences prior to the mailing of a notice of allowance under 35 U.S.C. 151 in the application, the remand shall be considered a decision in the review reversing an adverse determination of patentability as that phrase is used in 35 U.S.C. 154(b)(2) as amended by section 532(a) of the Uruguay Round Agreements Act, Public Law 103-465, 108 Stat. 4809, 4983-85 (1994), and a final decision in favor of the applicant under paragraph (c)(3) of this section. A remand by a panel of the Board of Patent Appeals and Interferences shall not be considered a decision in the review reversing an adverse determination of patentability as provided in this paragraph if there is filed a request for continued examination under 35 U.S.C. 132(b) that was not first preceded by the mailing, after such remand, of at least one of an action under 35 U.S.C. 132 or a notice of allowance under 35 U.S.C. 151.

(b) The term of a patent entitled to extension under paragraph (a) of this section shall be extended for the sum of the periods of delay calculated under paragraphs (c)(1), (c)(2), (c)(3) and (d) of this section, to the extent that these periods are not overlapping, up to a maximum of five years. The extension will run from the expiration date of the patent.

(c)(1) The period of delay under paragraph (a)(1) of this section for an application is the sum of the following periods, to the extent that the periods are not overlapping:

(i) With respect to each interference in which the application was involved, the number of days, if any, in the period beginning on the date the interference was declared or redeclared to involve the application in the interference and ending on the date that the interference was terminated with respect to the application; and

(ii) The number of days, if any, in the period beginning on the date prosecution in the application was suspended by the Patent and Trademark Office due to interference proceedings under 35 U.S.C. 135(a) not involving the application and ending on the date of the termination of the suspension.

(2) The period of delay under paragraph (a)(2) of this section for an application is the sum of the following periods, to the extent that the periods are not overlapping:

(i) The number of days, if any, the application was maintained in a sealed condition under 35 U.S.C. 181;

(ii) The number of days, if any, in the period beginning on the date of mailing of an examiner's answer under § 41.39 of this title in the application under secrecy order and ending on the date the secrecy order and any renewal thereof was removed;

(iii) The number of days, if any, in the period beginning on the date applicant was notified that an interference would be declared but for the secrecy order and ending on the date the secrecy order and any renewal thereof was removed; and

(iv) The number of days, if any, in the period beginning on the date of notification under § 5.3(c) and ending on the date of mailing of the notice of allowance under § 1.311.

(3) The period of delay under paragraph (a)(3) of this section is the sum of the number of days, if any, in the period beginning on the date on which an appeal to the Board of Patent Appeals and Interferences was filed under 35 U.S.C. 134 and ending on the date of a final decision in favor of the applicant by the Board of Patent Appeals and Interferences or by a Federal court in an appeal under 35 U.S.C. 141 or a civil action under 35 U.S.C. 145.

(d) The period of delay set forth in paragraph (c)(3) shall be reduced by:

(1) Any time during the period of appellate review that occurred before three years from the filing of the first national application for patent presented for examination; and

(2) Any time during the period of appellate review, as determined by the Director, during which the applicant for patent did not act with due diligence. In determining the due diligence of an applicant, the Director may examine the facts and circumstances of the applicant's actions during the period of appellate review to determine whether the applicant exhibited that degree of timeliness as may reasonably be expected from, and which is ordinarily exercised by, a person during a period of appellate review.

(e) The provisions of this section apply only to original patents, except for design patents, issued on applications filed on or after June 8, 1995, and before May 29, 2000.

Opinion

35 U.S.C. § 154(b)(as amended by the "Uruguay Round Agreements Act," enacted December 8, 1994, as part of Public Law 103-465) provides for patent term extension for appellate review, interference and secrecy order delays in applications filed on or after June 8, 1995 and before May 29, 2000. 35 U.S.C. § 154(b)(as amended by the "American Inventors Protection Act of 1999," enacted November 29, 1999, as part of Public Law 106-113) provides for patent term adjustment for administrative delays in applications filed on or after May 29, 2000.

The above-identified application was filed on December 20, 1999. Accordingly, the application is entitled to patent term extension based upon the conditions in 35 U.S.C. § 154(b) in effect on June 8, 1995. The current provisions of 35 U.S.C. § 154(b) became effective on May 29, 2000 and do not apply because the current version of 35 U.S.C. § 154(b) only applies to applications filed on or after May 29, 2000. Pursuant to 35 U.S.C. § 154(b) in effect on June 8, 1995, an

applicant can receive patent term extension only if there was an appellate review, interference or a secrecy order delay as set forth in the statute. The statute limits the Office's authority to grant patent term extension to only those situations stated in the statute.

In order to implement 35 U.S.C. 154(b) (in effect between June 8, 1995 and May 28, 2000), the Office promulgated 37 CFR 1.701(c)(3), which, consistent with the statute, requires a final decision in favor of the applicant by the Board of Patent Appeals and Interferences or by a Federal Court in an appeal under 35 U.S.C. 145 to be eligible for patent term extension. The application was not issued due to an adverse determination of patentability by the BPAI, was not delayed due to an interference proceeding, nor was it subject to a secrecy order, as a result, this application is not eligible for the extension under 35 U.S.C. 154 in effect on June 8, 1995 and 37 CFR 1.701. The Office has no authority to grant an extension of the term due to administrative delays except as authorized by 35 U.S.C. § 154.

Petitioner argues that he timely and diligently filed all necessary responses, and that the Examiner unreasonably delayed and improperly mailed out a Notice of Abandonment, which should not adversely impact Petitioner's patent term. For patent term extension, both 35 U.S.C. 154(b)(2) in effect on June 8, 1995 and 37 CFR 1.701(a)(3) where the delay is not related to a secrecy order or an interference, require a decision by the BPAI reversing an adverse determination of patentability for the patent application to be eligible for patent term extension under 35 U.S.C. § 154. Since, the application was not issued due to an adverse determination of patentability by the BPAI, the application is not entitled to patent term extension under 35 U.S.C. 154 and 37 CFR 1.701.

The Office regrets the delays in issuing Applicants patent. The Office has no authority to grant an extension of the term due to administrative delays except as authorized by 35 U.S.C. § 154.

Petitioner's deposit account has not been charged a petition fee.

Telephone inquiries with regard to this communication should be directed to Mark O. Polutta at (571) 272-7709.

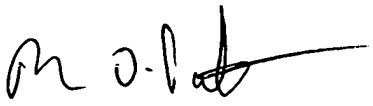

Mark Polutta
Senior Legal Advisor
Office of Patent Legal Administration
Office of the Deputy Commissioner
for Patent Examination Policy

UNITED STATES PATENT AND TRADEMARK OFFICE

Commissioner for Patents
United States Patent and Trademark Office
P.O. Box 1450
Alexandria, VA 22313-1450
www.uspto.gov

ZIOLKOWSKI PATENT SOLUTIONS GROUP, SC (GEMS)
136 S WISCONSIN ST
PORT WASHINGTON WI 53074

MAILED
MAR 09 2011
OFFICE OF PETITIONS

In re Application of	:	
Singh et al.	:	
Application No. 09/468,752	:	
Filed: December 21, 1999	:	DECISION
Attorney Docket No. GEMS8081.028	:	
For: Method and Apparatus for Screening a	:	
Potential Customer and Assigning an Account	:	
Number to the Potential Customer Across a	:	
Global Computer Network	:	

The above-identified application has been forwarded to the undersigned for consideration of a petition for patent term extension entitled "Petition Under 37 CFR 1.701 and 37 CFR 1.181 Requesting Calculation of Patent Term Extension Under 35 U.S.C. 154(b)" received on August 27, 2010.

The petition is **dismissed**.

Background

Petitioner asserts that the application was filed on December 21, 1999 and that more than ten years after the filing date the Notice of Allowability was mailed by the Office. Petitioner asserts that the patent to be issued from the above identified application is entitled to a patent term extension as the application was under appellate review for 2734 days. Petitioner asserts that the Notice of Allowance and Issue Fee(s) Due Notice, included a determination that the patent term extension was 0 days, is in error, as the application is entitled patent term extension.

Petitioner asserts that the application was under appellate review since at least March 3, 2003, when Applicant filed a Notice of Appeal. Petitioner asserts that the application was improperly abandoned on October 6, 2006, as the Appeal Brief had been properly filed. Petitioner asserts that a petition to withdraw the abandonment was filed on November 2, 2006, followed by Status Inquiry letters filed on April 22, 2008, September 19, 2008 and December 19, 2008 and a renewed petition to withdraw the abandonment filed on October 15, 2009, which finally resulted in a decision withdrawing the holding of the abandonment mailed on May 21, 2010.

Petitioner asserts that as the appeal to the BPAI was filed on March 3, 2003 and the date on which a final decision in favor of Applicant was August 27, 2010, the application was under appellate review for 2734 days and that Petitioner requests appropriate Patent Term Extension.

On December 21, 1999, the above identified application was received by the Office.

On March 11, 2003, a Notice of Appeal was received by the Office.

On May 5, 2003, an Appeal Brief was received by the Office.

On July 7, 2003, a Supplemental Appeal Brief was received by the Office.

On September 16, 2003, a Non-Final Office Action was mailed by the Office.

On December 16, 2003, a request to reinstate the Appeal and Appeal Brief was received by the Office.

On October 6, 2006, a Notice of Abandonment was mailed by the Office.

On November 2, 2006, a petition to withdraw the holding of abandonment was received by the Office.

On October 15, 2009, a renewed petition to withdraw the holding of abandonment was received by the Office.

On May 21, 2010, a decision on petition was mailed by the Office.

On August 27, 2010, a Notice of Allowance and Issue Fee(s) Due notice, which included a determination that the patent term extension was zero (0) days, was mailed by the Office.

Applicable Statutes and Regulation

35 U.S.C. 154. Contents and term of patent (in effect on June 8, 1995)

(b) TERM EXTENSION.-

(1) INTERFERENCE DELAY OR SECRECY ORDERS.-If the issue of an original patent is delayed due to a proceeding under section 135(a) of this title, or because the application for patent is placed under an order pursuant to section 181 of this title, the term of the patent shall be extended for the period of delay, but in no case more than 5 years.

(2) EXTENSION FOR APPELLATE REVIEW.-If the issue of a patent is delayed due to appellate review by the Board of Patent Appeals and Interferences or by a Federal court and the patent is issued pursuant to a decision in the review reversing an adverse

determination of patentability, the term of the patent shall be extended for a period of time but in no case more than 5 years. A patent shall not be eligible for extension under this paragraph if it is subject to a terminal disclaimer due to the issue of another patent claiming subject matter that is not patentably distinct from that under appellate review.

37 CFR 1.701 Extension of patent term due to examination delay under the Uruguay Round Agreements Act (original applications, other than designs, filed on or after June 8, 1995, and before May 29, 2000).

(a) A patent, other than for designs, issued on an application filed on or after June 8, 1995, is entitled to extension of the patent term if the issuance of the patent was delayed due to:

(1) Interference proceedings under 35 U.S.C. 135(a); and/or

(2) The application being placed under a secrecy order under 35 U.S.C. 181; and/or

(3) Appellate review by the Board of Patent Appeals and Interferences or by a Federal court under 35 U.S.C. 141 or 145, if the patent was issued pursuant to a decision in the review reversing an adverse determination of patentability and if the patent is not subject to a terminal disclaimer due to the issuance of another patent claiming subject matter that is not patentably distinct from that under appellate review. If an application is remanded by a panel of the Board of Patent Appeals and Interferences and the remand is the last action by a panel of the Board of Patent Appeals and Interferences prior to the mailing of a notice of allowance under 35 U.S.C. 151 in the application, the remand shall be considered a decision in the review reversing an adverse determination of patentability as that phrase is used in 35 U.S.C. 154(b)(2) as amended by section 532(a) of the Uruguay Round Agreements Act, Public Law 103-465, 108 Stat. 4809, 4983-85 (1994), and a final decision in favor of the applicant under paragraph (c)(3) of this section. A remand by a panel of the Board of Patent Appeals and Interferences shall not be considered a decision in the review reversing an adverse determination of patentability as provided in this paragraph if there is filed a request for continued examination under 35 U.S.C. 132(b) that was not first preceded by the mailing, after such remand, of at least one of an action under 35 U.S.C. 132 or a notice of allowance under 35 U.S.C. 151.

(b) The term of a patent entitled to extension under paragraph (a) of this section shall be extended for the sum of the periods of delay calculated under paragraphs (c)(1), (c)(2), (c)(3) and (d) of this section, to the extent that these periods are not overlapping, up to a maximum of five years. The extension will run from the expiration date of the patent.

(c)(1) The period of delay under paragraph (a)(1) of this section for an application is the sum of the following periods, to the extent that the periods are not overlapping:

(i) With respect to each interference in which the application was involved, the number of days, if any, in the period beginning on the date the interference was declared or redeclared to involve the application in the interference and ending on the date that the interference was terminated with respect to the application; and

(ii) The number of days, if any, in the period beginning on the date prosecution in the application was suspended by the Patent and Trademark Office due to interference proceedings under 35 U.S.C. 135(a) not involving the application and ending on the date of the termination of the suspension.

(2) The period of delay under paragraph (a)(2) of this section for an application is the sum of the following periods, to the extent that the periods are not overlapping:

(i) The number of days, if any, the application was maintained in a sealed condition under 35 U.S.C. 181;

(ii) The number of days, if any, in the period beginning on the date of mailing of an examiner's answer under § 41.39 of this title in the application under secrecy order and ending on the date the secrecy order and any renewal thereof was removed;

(iii) The number of days, if any, in the period beginning on the date applicant was notified that an interference would be declared but for the secrecy order and ending on the date the secrecy order and any renewal thereof was removed; and

(iv) The number of days, if any, in the period beginning on the date of notification under § 5.3(c) and ending on the date of mailing of the notice of allowance under § 1.311.

(3) The period of delay under paragraph (a)(3) of this section is the sum of the number of days, if any, in the period beginning on the date on which an appeal to the Board of Patent Appeals and Interferences was filed under 35 U.S.C. 134 and ending on the date of a final decision in favor of the applicant by the Board of Patent Appeals and Interferences or by a Federal court in an appeal under 35 U.S.C. 141 or a civil action under 35 U.S.C. 145.

(d) The period of delay set forth in paragraph (c)(3) shall be reduced by:

(1) Any time during the period of appellate review that occurred before three years from the filing of the first national application for patent presented for examination; and

(2) Any time during the period of appellate review, as determined by the Director, during which the applicant for patent did not act with due diligence. In determining the due diligence of an applicant, the Director may examine the facts and circumstances of the applicant's actions during the period of appellate review to determine whether the applicant exhibited that degree of timeliness as may reasonably be expected from, and which is ordinarily exercised by, a person during a period of appellate review.

(e) The provisions of this section apply only to original patents, except for design patents, issued on applications filed on or after June 8, 1995, and before May 29, 2000.

Opinion

35 U.S.C. § 154(b)(as amended by the "Uruguay Round Agreements Act," enacted December 8, 1994, as part of Public Law 103-465) provides for patent term extension for appellate review, interference and secrecy order delays in applications filed on or after June 8, 1995 and before May 29, 2000. 35 U.S.C. § 154(b)(as amended by the "American Inventors Protection Act of 1999," enacted November 29, 1999, as part of Public Law 106-113) provides for patent term adjustment for administrative delays in applications filed on or after May 29, 2000.

The above-identified application was filed on December 21, 1999. Accordingly, the application is entitled to patent term extension based upon the conditions in 35 U.S.C. § 154(b) in effect on June 8, 1995. The current provisions of 35 U.S.C. § 154(b) became effective on May 29, 2000 and do not apply because the current version of 35 U.S.C. § 154(b) only applies to applications filed on or after May 29, 2000. Pursuant to 35 U.S.C. § 154(b) in effect on June 8, 1995, an

applicant can receive patent term extension only if there was an appellate review, interference or a secrecy order delay as set forth in the statute. The statute limits the Office's authority to grant patent term extension to only those situations stated in the statute.

In order to implement 35 U.S.C. 154(b) (in effect between June 8, 1995 and May 28, 2000), the Office promulgated 37 CFR 1.701(c)(3), which, consistent with the statute, requires a final decision in favor of the applicant by the Board of Patent Appeals and Interferences or by a Federal Court in an appeal under 35 U.S.C. 145 to be eligible for patent term extension. The application was not issued due to an adverse determination of patentability by the BPAI, was not delayed due to an interference proceeding, nor was it subject to a secrecy order, as a result, this application is not eligible for the extension under 35 U.S.C. 154 in effect on June 8, 1995 and 37 CFR 1.701. The Office has no authority to grant an extension of the term due to administrative delays except as authorized by 35 U.S.C. § 154.

Petitioner argues that he timely and diligently filed all necessary responses, and that the Examiner unreasonably delayed and improperly mailed out a Notice of Abandonment, which should not adversely impact Petitioner's patent term. For patent term extension, both 35 U.S.C. 154(b)(2) in effect on June 8, 1995 and 37 CFR 1.701(a)(3) where the delay is not related to a secrecy order or an interference, require a decision by the BPAI reversing an adverse determination of patentability for the patent application to be eligible for patent term extension under 35 U.S.C. § 154. Since, the application was not issued due to an adverse determination of patentability by the BPAI, the application is not entitled to patent term extension under 35 U.S.C. 154 and 37 CFR 1.701.

The Office regrets the delays in issuing Applicants patent. The Office has no authority to grant an extension of the term due to administrative delays except as authorized by 35 U.S.C. § 154.

Petitioner's deposit account has not been charged a petition fee.

Telephone inquiries with regard to this communication should be directed to Mark O. Polutta at (571) 272-7709.

Mark Polutta
Senior Legal Advisor
Office of Patent Legal Administration
Office of the Deputy Commissioner
for Patent Examination Policy

UNITED STATES PATENT AND TRADEMARK OFFICE

Commissioner for Patents
United States Patent and Trademark Office
P.O. Box 1450
Alexandria, VA 22313-1450
www.uspto.gov

Qwest Communications International Inc.
1801 California Street, # 900
Denver CO 80202

MAILED

JAN 18 2011

OFFICE OF PETITIONS

In re Application of :
Pugaczewski, et al. :
Application No. 09/469,206 :
Filed: December 21, 1999 :
Attorney Docket No. 020366-062610US :

DECISION ON PETITION

This is a decision on the petition under 37 CFR 1.181, filed September 14, 2010, requesting withdrawal of the holding of abandonment in the above-identified application.

The petition is **GRANTED**.

A Notice of Abandonment was mailed on August 22, 2005, stating that this application is abandoned for failure to take appropriate action in a timely manner after the November 26, 2004, decision of the Board of Patent Appeals and Interferences (BPAI). Therefore, the proceedings as to the rejected claims were terminated.

Petitioner contends that the holding of abandonment of this application was improper. In summary, petitioner states that the application was improperly abandoned pursuant to the BPAI decision mailed November 26, 2004, without consideration of the "Decision on Request for Rehearing" mailed May 18, 2005.

A review of the application file history reveals that a "Decision on Appeal" was mailed November 26, 2004, affirming the rejections of the examiner as to all pending claims. On January 21, 2005, within two months of the BPAI decision, applicants filed a "Request for Rehearing by the Board of Patent Appeals and Interferences." In response on, May 18, 2005, the BPAI mailed "Decision on Request for Rehearing" reversing the rejection of claims 1 and 4 and the rejections of claims 2, 3, and 5-10. Notwithstanding, a Notice of Abandonment was mailed on August 22, 2005, indicating that application was abandoned because the period for seeking court review of the BPAI decision mailed November 26, 2004, expired.

The record demonstrates that applicants filed a request for rehearing pursuant to 37 CFR 41.52 within two months of the mailing date of the original decision of the BPAI. Thereafter, the BPAI granted the request for rehearing and reversed the rejections of the examiner. Accordingly, it is apparent that the imposition of the holding of abandonment based upon the failure to respond to the BPAI decision mailed November 26, 2004, was in error. In fact, in light of the complete reversal of the examiner's rejections, the application should have been directed to the examiner for immediate action. See MPEP 1214.04.

In view of the above, the holding of abandonment is improper and is **withdrawn**.

This application is being directed to Technology Center, GAU 2145 to be returned to a pending status to await action by the examiner as per the "Decision on Request for Rehearing" mailed May 18, 2005.

Inquiries concerning this decision may be directed to the undersigned at (571) 272-3222.

/Kenya A. McLaughlin/

Kenya A. McLaughlin
Petitions Attorney
Office of Petitions

UNITED STATES PATENT AND TRADEMARK OFFICE

Commissioner for Patents
United States Patent and Trademark Office
P.O. Box 1450
Alexandria, VA 22313-1450
www.uspto.gov

Paper No. 8

GLENNAH D. HART
P.O. BOX 4565
COLUMBIA SC 29240

MAILED

SEP 30 2010

OFFICE OF PETITIONS

In re Patent No. 6,289,896 :
Glennah Hart :
Issue Date: September 18, 2001: DECISION ON PETITION
Application No. 09/470,756 :
Filed: December 23, 1999 :
Attorney Docket No. 99-0740 :

This is a decision on the PETITION TO ACCEPT UNAVOIDABLY DELAYED PAYMENT OF MAINTENANCE FEE IN AN EXPIRED PATENT (37 CFR 1.378(b))," filed October 29, 2009. This also responds to the PETITION TO ACCEPT UNINTENTIONALLY DELAYED PAYMENT OF MAINTENANCE FEE IN AN EXPIRED PATENT (37 CFR 1.378(c)) filed September 13, 2010.

The petition under 37 CFR 1.378(b) is **dismissed**.

The petition under 37 CFR 1.378(c) is **granted**.

The patent issued September 18, 2001. The grace period for paying the 7-½ year maintenance fee expired at midnight on September 18, 2009, with no payment received.

The petition under 37 CFR 1.378(b) includes payment of the second maintenance fee ($1240), the surcharge of $700 and a statement in support of petition. (No $65 surcharge is required). The petition under 37 CFR 1.378(c) includes the required statement of unintentional delay. The deficiency in surcharge of $875 (used with the unnecessary $65 surcharge) required to pay the full unintentional surcharge of $1,640 was submitted on August 19, 2010.

ON PETITION UNDER 37 CFR 1.378(b)

STATUTES, RULES AND REGULATIONS

35 U.S.C. § 41(c)(1) states that:

The Director may accept the delayed payment of any maintenance fee required ... after the six month grace period if the delay is shown to the satisfaction of the Director to have been unavoidable.

37 C.F.R. §1.378(b) provides that:

Any petition to accept an unavoidably delayed payment of a maintenance fee must include:

(1) The required maintenance fee set forth in §1.20(e) through (g);

(2) The surcharge set forth in §1.20(I)(1); and

(3) A showing that the delay was unavoidable since reasonable care was taken to ensure that the maintenance fee would be paid timely and that the petition was filed promptly after the patentee was notified of, or otherwise became aware of, the expiration of the patent. The showing must enumerate the steps taken to ensure timely payment of the maintenance fee, the date and the manner in which patentee became aware of the expiration of the patent, and the steps taken to file the petition promptly.

Acceptance of a late maintenance fee under the unavoidable delay standard is considered under the same standard for reviving an abandoned application under 35 U.S.C. 133. Decisions on reviving abandoned applications on the basis of "unavoidable" delay have adopted the reasonably prudent person standard in determining if the delay was unavoidable:

> The word 'unavoidable' ... is applicable to ordinary human affairs, and requires no more or greater care or diligence than is generally used and observed by prudent and careful men in relation to their most important business.

In re Mattullath, 38 App. D.C. 497, 514-15 (1912)(quoting Ex parte Pratt, 1887 Dec. Comm'r Pat. 31, 32-33 (1887)); see also Winkler v. Ladd, 221 F. Supp. 550, 552, 138 U.S.P.Q. 666, 167-68 (D.D.C. 1963), aff'd, 143 U.S.P.Q. 172 (D.C. Cir. 1963); Ex parte Henrich, 1913 Dec. Comm'r Pat. 139, 141 (1913). However, a petition cannot be granted where a petitioner has failed to meet his or her burden of establishing that the delay was

"unavoidable." Haines v. Quigg, 673 F. Supp. 314, 316-17, 5 USPQ2d 1130, 1131-32 (N.D. Ind. 1987).

A delay resulting from an error (e.g., a docketing error) on the part of an employee in the performance of a clerical function may provide the basis for a showing of "unavoidable" delay, provided it is shown that:

(1) the error was the cause of the delay at issue;
(2) there was in place a business routine for performing the clerical function that could reasonably be relied upon to avoid errors in its performance; and
(3) the employee was sufficiently trained and experienced with regard to the function and routine for its performance that reliance upon such employee represented the exercise of due care.

See MPEP 711.03(c)(III)(C)(2)(See also In re Egbers, et al., 6 U.S.P.Q.2d 1869 (Commr. Pat. 1988), rev'd on other grounds sub nom, Theodor Groz & Sohne & Ernest Bechert Nadelfabrik KG v. Quigg, 10 U.S.P.Q.2d 1787 (D.D.C. 1988); In re Katrapat, AG, 6 U.S.P.Q.2d 1863 (Commr. Pat. 1988).

OPINION

A maintenance fee and any necessary surcharge for a patent must be submitted in the amount due on the date the maintenance fee and any necessary surcharge are paid, and at the proper time, i.e., within the periods set forth in 37 CFR 1.362.

37 CFR 1.6. Receipt of correspondence.
(a) Date of receipt and Express Mail date of deposit. Correspondence received in the Patent and Trademark Office is stamped with the date of receipt except as follows:
(1) The Patent and Trademark Office is not open for the filing of correspondence on any day that is a Saturday, Sunday, or Federal holiday within the District of Columbia. Except for correspondence transmitted by facsimile under paragraph (a)(3) of this section, or filed electronically under paragraph (a)(4) of this section, no correspondence is received in the Office on Saturdays, Sundays, or Federal holidays within the District of Columbia.
(2) Correspondence filed in accordance with § 1.10 will be stamped with the date of deposit as "Express Mail " with the United States Postal Service.

(3) Correspondence transmitted by facsimile to the Patent and Trademark Office will be stamped with the date on which the complete transmission is received in the Patent and Trademark Office unless that date is a Saturday, Sunday, or Federal holiday within the District of Columbia, in which case the date stamped will be the next succeeding day which is not a Saturday, Sunday, or Federal holiday within the District of Columbia.

(4) [Reserved].

37 CFR 1.8 further provides, Certificate of mailing or transmission.

(a) Except in the situations enumerated in paragraph (a)(2) of this section or as otherwise expressly excluded in this chapter, correspondence required to be filed in the U.S. Patent and Trademark Office within a set period of time will be considered as being timely filed if the procedure described in this section is followed. The actual date of receipt will be used for all other purposes.

(1) Correspondence will be considered as being timely filed if:

(i) The correspondence is mailed or transmitted prior to expiration of the set period of time by being:

(A) Addressed as set out in § 1.1(a) and deposited with the U.S. Postal Service with sufficient postage as first class mail; or

(B) Transmitted by facsimile to the Patent and Trademark Office in accordance with § 1.6(d); and

(ii) The correspondence includes a certificate for each piece of correspondence stating the date of deposit or transmission. The person signing the certificate should have reasonable basis to expect that the correspondence would be mailed or transmitted on or before the date indicated.

In this instance, the period for timely paying the maintenance fee (and surcharge) expired on September 18, 2009. Thus, the maintenance fee payment (and surcharge) would have been considered timely filed if received in the Office on or before September 18, 2009, or if received in the Office after that date with a certificate of mailing pursuant to 37 CFR 1.8 dated on or before September 18, 2009.

Petitioner states that he placed the maintenance fee payment in the mail before the expiration date of September 18, 2009. Petitioner further states that he followed the instructions of a PTO employee, however, that employee failed to advised him of

512 certificate of mailing or transmission (that is, 37 CFR 1.8).

A review of the record confirms that the maintenance fee was received in the Office on Monday, September 21, 2009, three days after the expiration date of September 18, 2009. Further, *pro se* applicant admits that the transmittal did not include a certificate of mailing.

At the same time, *pro se* petitioner has submitted persuasive evidence to show that the cashier's check used to pay the maintenance fee was drawn from his bank account by the teller on September 15, 2009, three days *before* the expiration date. Moreover, the payment presumably mailed from South Carolina by *non-Express* mail was received in the Office on September 21, 2009, the first business day after September 18, 2009.

The question remains as to whether petitioner has any further evidence to show that the maintenance fee payment was placed in the mail to the United States Patent and Trademark Office on or before September 18, 2009. Of particular significance would be any documentation created contemporaneously by the USPS, such as an itemized receipt or a delivery confirmation receipt or a USPS certificate of mailing. Absent such evidence or other persuasive showing, it cannot be concluded that petitioner has met his burden of establishing unavoidable delay. In view thereof, the petition under 37 CFR 1.378(b) must be dismissed.

ON PETITION UNDER 37 CFR 1.378(b)

This petition was timely filed within twenty-four months after the expiration of the six-month grace period. As required, petitioner submitted with the petition the required maintenance fee, the surcharge for accepting an unintentionally delayed maintenance fee after expiration, and a statement that the delay in payment of the maintenance fee was unintentional. These fees were accepted at the reduced small entity rate, as the fees were accompanied by petitioner's assertion of having made a determination of continued entitlement to pay small entity fees, pursuant to new 37 CFR 1.27(g)(1), effective September 8, 2000.

Accordingly, the maintenance fee in this case is hereby accepted and the above-identified patent is hereby reinstated as of the mail date of this decision.

Telephone inquiries related to this decision may be directed to the undersigned at (571) 272-3219.

Nancy Johnson
Senior Petitions Attorney
Office of Petitions

UNITED STATES PATENT AND TRADEMARK OFFICE

Commissioner for Patents
United States Patent and Trademark Office
P.O. Box 1450
Alexandria, VA 22313-1450
www.uspto.gov

BACON & THOMAS, PLLC
625 SLATERS LANE
FOURTH FLOOR
ALEXANDRIA VA 22314-1176

MAILED
DEC 15 2011
OFFICE OF PETITIONS

In re Patent No. 7,378,489 :
Issue Date: May 27, 2008 :
Application No. 09/470,997 : NOTICE
Filed: December 23, 1999 :
Attorney Docket No. GLOV3002/REF :

This is a notice regarding your request for acceptance of a fee deficiency submission under 37 CFR 1.28. On September 1, 1998, the Court of Appeals for the Federal Circuit held that 37 CFR 1.28(c) is the sole provision governing the time for correction of the erroneous payment of the issue fee as a small entity. **See DH Technology v. Synergystex International, Inc. 154 F.3d 1333, 47 USPQ2d 1865 (Fed. Cir. Sept. 1, 1998).**

The Office no longer investigates or rejects original or reissue applications under 37 CFR 1.56. **1098 Off. Gaz. Pat. Office 502 (January 3, 1989).** Therefore, nothing in this Notice is intended to imply that an investigation was done.

Your fee deficiency submission under 37 CFR 1.28 is hereby **ACCEPTED**.

This application is no longer entitled to small entity status. Accordingly, all future fees paid in this application must be paid at the large entity rate.

Inquiries related to this communication should be directed to Diane Goodwyn at (571) 272-6735.

Thurman K. Page
Petitions Examiner
Office of Petitions

UNITED STATES PATENT AND TRADEMARK OFFICE

Commissioner for Patents
United States Patent and Trademark Office
P.O. Box 1450
Alexandria, VA 22313-1450
www.uspto.gov

KENYON & KENYON LLP
ONE BROADWAY
NEW YORK, NY 10004

MAILED

JUN 16 2011

OFFICE OF PETITIONS

In re Patent No. **6,492,420**
Issue Date: December 10, 2002
Application No. 09/471,620
Filed: December 21, 1999
Attorney Docket No. **697.002US2**

DECISION ON PETITION
UNDER 37 CFR 1.378(c)

This is a decision on the petition under 37 CFR 1.137(b), filed March 17, 2011, to revive unintentionally abandoned patent. The petition will be considered under 37 CFR 1.378 (c) as a petition to accept the unintentionally delayed payment of a maintenance fee for the above-identified patent.

The petition is **GRANTED**.

This patent expired at midnight on December 10, 2010 for failure to pay the 7½ year maintenance fee. Since this petition was submitted within twenty-four months after the six-month grace period provided in 37 CFR I.362(e), the petition was timely filed under the provisions of 37 CFR I.378(c).

37 CFR 1.378(c) requires a statement that "the delay in payment of the maintenance fee was unintentional." Since the statement appearing in the petition varies from the language required by 37 CFR 1.378(c)(3), the statement will be construed as the statement required by 37 CFR 1.378(c)(3). If this is an incorrect reading of the statement appearing in the petition, petitioner must promptly notify the Office.

The maintenance fee is hereby accepted and the above-identified patent is reinstated as of the mail date of this decision.

Telephone inquiries concerning this decision should be directed to Monica A. Graves at (571) 272-7253.

The patent file is being forwarded to Files Repository.

Thurman K. Page
Petitions Examiner
Office of Petitions

PTO/SB/66 (03-09)
Approved for use through 03/31/2012. OMB 0651-0016
U.S. Patent and Trademark Office: U.S. DEPARTMENT OF COMMERCE
Under the Paperwork Reduction Act of 1995, no persons are required to respond to a collection of information unless it displays valid OMB control number.

PETITION TO ACCEPT UNINTENTIONALLY DELAYED PAYMENT OF MAINTENANCE FEE IN AN EXPIRED PATENT (37 CFR 1.378(c))

Patent Number	Issue Date (YYYY-MM-DD)	Application Number	Filing Date (YYYY-MM-DD)	Docket Number (if applicable)
7,209,892	2007-04-24	09/471,971	1999-12-23	

CAUTION: Maintenance fee (and surcharge, if any) payment must correctly identify: (1) the patent number and (2) the application number of the actual U.S. application leading to issuance of that patent to ensure the fee(s) is/are associated with the correct patent. 37 CFR 1.366(c) and (d).

SMALL ENTITY

☐ Patentee claims, or has previously claimed, small entity status. See 37 CFR 1.27.

LOSS OF ENTITLEMENT TO SMALL ENTITY STATUS

☐ Patentee is no longer entitled to small entity status. See 37 CFR 1.27(g)

NOT Small Entity			Small Entity		
	Fee	Code		Fee	Code
◉	3 ½ year	(1551)	○	3 ½ year	(2551)
○	7 ½ year	(1552)	○	7 ½ year	(2552)
○	11 ½ year	(1553)	○	11 ½ year	(2553)

SURCHARGE

The surcharge required by 37 CFR 1.20(i)(2) (Fee Code 1558) must be paid as a condition of accepting unintentionally delayed payment of the maintenance fee.

MAINTENANCE FEE (37 CFR 1.20(e)-(g))

The appropriate maintenance fee must be submitted with this petition.

STATEMENT

THE UNDERSIGNED CERTIFIES THAT THE DELAY IN PAYMENT OF THE MAINTENANCE FEE TO THIS PATENT WAS UNINTENTIONAL

PETITIONER(S) REQUEST THAT THE DELAYED PAYMENT OF THE MAINTENANCE FEE BE ACCEPTED AND THE PATENT REINSTATED

THIS PORTION MUST BE COMPLETED BY THE SIGNATORY OR SIGNATORIES

37 CFR 1.378(d) states: "Any petition under this section must be signed by an attorney or agent registered to practice before the Patent and Trademark Office, or by the patentee, the assignee, or other party in interest."

I certify, in accordance with 37 CFR 1.4(d)(4) that I am

◉ An attorney or agent registered to practice before the Patent and Trademark Office

○ A sole patentee

○ A joint patentee; I certify that I am authorized to sign this submission on behalf of all the other patentees.

○ A joint patentee; all of whom are signing this e-petition

○ The assignee of record of the entire interest

PTO/SB/66 (03-09)
Approved for use through 03/31/2012. OMB 0651-0016
U.S. Patent and Trademark Office: U.S. DEPARTMENT OF COMMERCE
Under the Paperwork Reduction Act of 1995, no persons are required to respond to a collection of information unless it displays valid OMB control number.

Patent Practitioner			
A signature of the applicant or representative is required in accordance with 37 CFR 1.33 and 10.18. Please see 37 CFR 1.4(d) for the form of the signature			
Signature	/Andrew L. Reibman/	Date (YYYY-MM-DD)	2012-04-12
Name	Andrew L. Reibman	Registration Number	47893

This collection of information is required by 37 CFR 1.378(c). The information is required to obtain or retain a benefit by the public which is to file (and by the USPTO to process) an application. Confidentiality is governed by 35 U.S.C. 122 and 37 CFR 1.11 and 1.14. This collection is estimated to take 1 hour to complete, including gathering, preparing, and submitting the completed application form to the USPTO. Time will vary depending upon the individual case. Any comments on the amount of time you require to complete this form and/ or suggestions for reducing this burden, should be sent to the Chief Information Officer, U.S. Patent and Trademark Office, U.S. Department of Commerce, P.O. Box 1450, Alexandria, VA 22313-1450. DO NOT SEND FEES OR COMPLETED FORMS TO THIS ADDRESS. **This form can only be used when in conjunction with EFS-Web. If this form is mailed to the USPTO, it may cause delays in reinstating the patent.**

Privacy Act Statement

The Privacy Act of 1974 (P.L. 93-579) requires that you be given certain information in connection with your submission of the attached form related to a patent application or patent. Accordingly, pursuant to the requirements of the Act, please be advised that: (1) the general authority for the collection of this information is 35 U.S.C. 2(b)(2); (2) furnishing of the information solicited is voluntary; and (3) the principal purpose for which the information is used by the U.S. Patent and Trademark Office is to process and/or examine your submission related to a patent application or patent. If you do not furnish the requested information, the U.S. Patent and Trademark Office may not be able to process and/or examine your submission, which may result in termination of proceedings or abandonment of the application or expiration of the patent.

The information provided by you in this form will be subject to the following routine uses:

1. The information on this form will be treated confidentially to the extent allowed under the Freedom of Information Act (5 U.S.C. 552) and the Privacy Act (5 U.S.C. 552a). Records from this system of records may be disclosed to the Department of Justice to determine whether the Freedom of Information Act requires disclosure of these records.

2. A record from this system of records may be disclosed, as a routine use, in the course of presenting evidence to a court, magistrate, or administrative tribunal, including disclosures to opposing counsel in the course of settlement negotiations.

3. A record in this system of records may be disclosed, as a routine use, to a Member of Congress submitting a request involving an individual, to whom the record pertains, when the individual has requested assistance from the Member with respect to the subject matter of the record.

4. A record in this system of records may be disclosed, as a routine use, to a contractor of the Agency having need for the information in order to perform a contract. Recipients of information shall be required to comply with the requirements of the Privacy Act of 1974, as amended, pursuant to 5 U.S.C. 552a(m).

5. A record related to an International Application filed under the Patent Cooperation Treaty in this system of records may be disclosed, as a routine use, to the International Bureau of the World Intellectual Property Organization, pursuant to the Patent Cooperation Treaty.

6. A record in this system of records may be disclosed, as a routine use, to another federal agency for purposes of National Security review (35 U.S.C. 181) and for review pursuant to the Atomic Energy Act (42 U.S.C. 218(c)).

7. A record from this system of records may be disclosed, as a routine use, to the Administrator, General Services, or his/her designee, during an inspection of records conducted by GSA as part of that agency's responsibility to recommend improvements in records management practices and programs, under authority of 44 U.S.C. 2904 and 2906. Such disclosure shall be made in accordance with the GSA regulations governing inspection of records for this purpose, and any other relevant (i.e., GSA or Commerce) directive. Such disclosure shall not be used to make determinations about individuals.

8. A record from this system of records may be disclosed, as a routine use, to the public after either publication of the application pursuant to 35 U.S.C. 122(b) or issuance of a patent pursuant to 35 U.S.C. 151. Further, a record may be disclosed, subject to the limitations of 37 CFR 1.14, as a routine use, to the public if the record was filed in an application which became abandoned or in which the proceedings were terminated and which application is referenced by either a published application, an application open to public inspections or an issued patent.

9. A record from this system of records may be disclosed, as a routine use, to a Federal, State, or local law enforcement agency, if the USPTO becomes aware of a violation or potential violation of law or regulation.

UNITED STATES PATENT AND TRADEMARK OFFICE

Commissioner for Patents
United States Patent and Trademark Office
P.O. Box 1450
Alexandria, VA 22313-1450
www.uspto.gov

In re Patent No. 7209892
Issue Date: April 24,2007
Application No. 09471971
Filed: December 23,1999
Attorney Docket No. 09386/100F051-US1

:
:DECISION GRANTING PETITION
:UNDER 37 CFR 1.378(c)
:

This is a decision on the electronic petition, filed April 12,2012 ,under 37 CFR 1.378(c) to accept the unintentionally delayed payment of the 3.5 year maintenance fee for the above-identified patent.

The petition is **GRANTED**.

The maintenance fee is accepted, and the above-identified patent reinstated as of April 12,2012 .
This decision also constitutes notice that the fee has been accepted. An electronic copy of the petition and this decision has been created as an entry in the Image File Wrapper. Nevertheless, petitioner should print and retain an independent copy.

Telephone inquiries related to this electronic decision should be directed to the Electronic Business Center at 1-866-217-9197.

UNITED STATES PATENT AND TRADEMARK OFFICE

Commissioner for Patents
United States Patent and Trademark Office
P.O. Box 1450
Alexandria, VA 22313-1450
www.uspto.gov

Patent No. : **7007274**
Ser. No. : **09/472290**
Inventor(s) : **PATEL, MAQBOOL**
Issued : **02/28/2006**
Title : **WEB-BASED APPARATUS AND METHOD FOR ENHANCING AND MONITORING PICTURE ARCHIVING AND COMMUNICATION SYSTEMS**
Docket No. : **15-IS-5298**

Re: Request for Certificate of Correction

Consideration has been given your request for the issuance of a certificate of correction for the above-identified patent under the provisions of Rule(s) 1.322 and/or 1.323.

Assignees' names and addresses (assignment data) printed in a patent, are based *solely* on information supplied in the appropriate space for identifying the assignment data, i.e., item 3 of the Issue Fee Transmittal Form PTOL-85B. Granting of a request under 37 CFR 3.81(b) is required to correct applicant's error providing ***incorrect or erroneous*** assignment data, *before* issuance of a Certificate of Correction, under 37 CFR 1.323 *(see Manual of Patent Examining Procedures (M.P.E.P) Chp.1400, sect. 1481).* This procedure is required *at any time after the issue fee is paid,* including after issuance of the patent.

In view of the foregoing, your request, in this matter, is hereby denied.

A request to correct the Assignee under 37 CFR 3.81(b) should include:

A. **the processing fee set forth in 37 CFR 1. 17(i) (currently $130);**
B. a statement that the failure to include the correct assignee name on the PTOL-85B was inadvertent; and
C. a copy of the Notice of Recordation of Assignment Document, reflecting the reel and frame number where the assignment(s) is recorded and/or reflecting proof of *the date* the assignment was submitted for recordation.

In the Request, Applicant(s) may request that the file be forwarded to Certificates of Correction Branch, for issuance of a Certificate of Correction, if the Request is granted.

Any request under 37 CFR 3.81(b) should be directed to the following address or facsimile number:

By mail: Mail Stop PETITIONS
Commissioner for Patents
Post Office Box 1450
Alexandria, VA 22313-1450

By hand: Customer Service Window
Mail Stop Petitions
Randolph Building
401 Dulany Street
Alexandria, VA 22314

By fax: (703) 872-9306
ATTN: Office of Petitions

If a fee (currently $100) was previously submitted for consideration of a Request for Certificate of Correction, under CFR 1.323, to correct assignment data, no additional fee is required.

A Certificate of Correction will be issued for the remaining errors.

Omega Lewis
For Mary Diggs
Decisions & Certificates
of Correction Branch
(703)756-1575 or (703) 756-1814

MCANDREWS HELD & MALLOY LTD
34TH FLOOR
500 W MADISON STREET
CHICAGO IL 60661

OL

SPE RESPONSE FOR CERTIFICATE OF CORRECTION

Paper No.: _____

DATE : 1-10-11

TO SPE OF : ART UNIT 2191

SUBJECT : Request for Certificate of Correction for Appl. No.: 09472290 Patent No.: 7007274

Please respond to this request for a certificate of correction within 7 days.

FOR IFW FILES:

Please review the requested changes/corrections as shown in the **COCIN** document(s) in the IFW application image. No new matter should be introduced, nor should the scope or meaning of the claims be changed.

Please complete the response (see below) and forward the completed response to scanning using document code **COCX**.

FOR PAPER FILES:

Please review the requested changes/corrections as shown in the attached certificate of correction. Please complete this form (see below) and forward it with the file to:

Certificates of Correction Branch (C of C)
Randolph Square – 9D10-E
Palm Location 7580

Omega Lewis
Certificates of Correction Branch

703-756-1575

Thank You For Your Assistance

The request for issuing the above-identified correction(s) is hereby:
Note your decision on the appropriate box.

☒ **Approved**	**All** changes apply.
☐ **Approved in Part**	Specify below which changes **do not** apply.
☐ **Denied**	State the reasons for denial below.

Comments: _____

_____

_____

_____

_____

W. Y. ZHEN — **SPE**

2191 — **Art Unit**

UNITED STATES PATENT AND TRADEMARK OFFICE

Commissioner for Patents
United States Patent and Trademark Office
P.O. Box 1450
Alexandria, VA 22313-1450
www.uspto.gov

SCOTT P MCBRIDE
MCANDREWS HELD & MALLOY LTD
34TH FLOOR
500 W MADISON STREET
CHICAGO IL 60661

MAILED

MAR 25 2011

OFFICE OF PETITIONS

In re Patent No. 7,007,274

Issue Date: February 28, 2006

Application No. 09/472,290

Filed: December 27, 1999

Attorney Docket No. 15-IS-5298

ON PETITION

This is a decision on the petition filed February 10, 2011, which is being treated as a request under 37 CFR 3.81(b)[1] to correct the assignee data on the front page of the above-identified patent by way of a Certificate of Correction.

The request is **dismissed**.

The instant petition after payment of the issue fee. It would have been inappropriate to make any changes to the record after payment of the issue fee. Thus, petitioner is only able to obtain correction to the assignee data by a request under 37 CFR 3.81(b). This request must be accompanied by a Certificate of Correction indicating the requested change to the assignee data. The petition filed February 10, 2011, was not accompanied by a Certificate of Correction setting forth the change to the assignee data requested and must be dismissed, accordingly.

The renewed petition must be accompanied by a Certificate of Correction setting forth the requested change to the assignee data.

The renewed request may directed to the following:

By mail: Mail Stop Petitions
Commissioner for Patents
P.O. Box 1450
Alexandria, VA 22313-1450

By FAX: (571) 273-8300
Attn: Office of Petitions

[1] See *Official Gazette* of June 22, 2004.

Questions regarding this decision may be directed to the undersigned at (571)272-3222.

/Kenya A. McLaughlin/

Kenya A. McLaughlin
Petitions Attorney
Office of Petitions

UNITED STATES PATENT AND TRADEMARK OFFICE

Commissioner for Patents
United States Patent and Trademark Office
P.O. Box 1450
Alexandria, VA 22313-1450
www.uspto.gov

SCOTT P MCBRIDE
MCANDREWS HELD & MALLOY LTD
34TH FLOOR
500 W MADISON STREET
CHICAGO IL 60661

MAILED

MAY 26 2011

OFFICE OF PETITIONS

In re Patent No. 7,007,274

Issue Date: February 28, 2006

Application No. 09/472,290

Filed: December 27, 1999

Attorney Docket No. **15-IS-5298**

ON PETITION

This is a decision on the petition filed May 9, 2011, which is being treated as a request under 37 CFR 3.81(b)[1] to correct the assignee data on the front page of the above-identified patent by way of a Certificate of Correction.

The request is **granted**.

Telephone inquiries concerning this matter may be directed to the undersigned at (571) 272-3222. Any questions concerning the issuance of the Certificate of Correction should be directed to the Certificate of Correction Branch at (703) 305-8309.

The file is being forwarded to the Certificate of Correction Branch for issuance of the requested Certificate of Correction.

/Kenya A. McLaughlin/

Kenya A. McLaughlin
Petitions Attorney
Office of Petitions

[1] See *Official Gazette* of June 22, 2004.

UNITED STATES PATENT AND TRADEMARK OFFICE

Commissioner for Patents
United States Patent and Trademark Office
P.O. Box 1450
Alexandria, VA 22313-1450
www.uspto.gov

G ROGER LEE ESQUIRE
FISH & RICHARDSON PC
225 FRANKLIN STREET
BOSTON MA 02110-2804

MAILED
NOV 22 2011
OFFICE OF PETITIONS

In re Patent No. 6,325,280 :
Issue Date: December 4, 2001 :
Application No. 09/473,095 : ON PETITION
Filed: December 28, 1999 :
Attorney Docket No. 02021-055002 :

This is a decision on the petition under 37 CFR 1.378(c), filed November 14, 2011, to accept the unintentionally delayed payment of a maintenance fee for the above-identified patent.

The petition is **GRANTED**.

This patent expired on December 4, 2009 for failure to pay the 7 ½ year maintenance fee. Since this petition was submitted within twenty-four months after the six-month grace period provided in 37 CFR 1.362(e), the petition was timely filed under the provisions of 37 CFR 1.378(c).

The maintenance fee is hereby accepted and the above-identified patent is reinstated as of the mail date of this decision.

Petitioner will not receive future correspondence related to maintenance fees for the patent unless a "Fee Address" Indication Form (see PTO/SB/47) and Request for Customer Number (see PTO/SB/125) are submitted.

Telephone inquiries concerning this decision should be directed to undersigned at (571) 272-1642.

/AMW/
April M. Wise
Petitions Examiner
Office of Petitions

cc: MICHAEL J. MURPHY
ADVANCED INTERCONNECTIONS CORP
5 ENERGY WAY
WEST WARRICK, RI 02893

UNITED STATES PATENT AND TRADEMARK OFFICE

Commissioner for Patents
United States Patent and Trademark Office
P.O. Box 1450
Alexandria, VA 22313-1450
www.uspto.gov

In re Patent No. 6497358
Issue Date: December 24,2002
Application No. 09473138
Filed: December 28,1999
Attorney Docket No. P06505US1/RF

:
:DECISION GRANTING PETITION
:UNDER 37 CFR 1.378(c)
:

This is a decision on the electronic petition, filed May 23,2011 ,under 37 CFR 1.378(c) to accept the unintentionally delayed payment of the 7.5 year maintenance fee for the above-identified patent.

The petition is **GRANTED**.

The maintenance fee is accepted, and the above-identified patent reinstated as of May 23,2011 .
This decision also constitutes notice that the fee has been accepted. An electronic copy of the petition and this decision has been created as an entry in the Image File Wrapper. Nevertheless, petitioner should print and retain an independent copy.

Telephone inquiries related to this electronic decision should be directed to the Electronic Business Center at 1-866-217-9197.

PTO/SB/66 (03-09)
Approved for use through 03/31/2012. OMB 0651-0016
U.S. Patent and Trademark Office: U.S. DEPARTMENT OF COMMERCE
Under the Paperwork Reduction Act of 1995, no persons are required to respond to a collection of information unless it displays valid OMB control number.

PETITION TO ACCEPT UNINTENTIONALLY DELAYED PAYMENT OF MAINTENANCE FEE IN AN EXPIRED PATENT (37 CFR 1.378(c))

Patent Number	Issue Date (YYYY-MM-DD)	Application Number	Filing Date (YYYY-MM-DD)	Docket Number (if applicable)
6,497,358	2002-12-24	09473138	1999-12-28	P06505US1

CAUTION: Maintenance fee (and surcharge, if any) payment must correctly identify: (1) the patent number and (2) the application number of the actual U.S. application leading to issuance of that patent to ensure the fee(s) is/are associated with the correct patent. 37 CFR 1.366(c) and (d).

SMALL ENTITY

☒ Patentee claims, or has previously claimed, small entity status. See 37 CFR 1.27.

LOSS OF ENTITLEMENT TO SMALL ENTITY STATUS

☐ Patentee is no longer entitled to small entity status. See 37 CFR 1.27(g)

NOT Small Entity			Small Entity		
	Fee	Code		Fee	Code
○	3 ½ year	(1551)	○	3 ½ year	(2551)
○	7 ½ year	(1552)	◉	7 ½ year	(2552)
○	11 ½ year	(1553)	○	11 ½ year	(2553)

SURCHARGE

The surcharge required by 37 CFR 1.20(i)(2) (Fee Code 1558) must be paid as a condition of accepting unintentionally delayed payment of the maintenance fee.

MAINTENANCE FEE (37 CFR 1.20(e)-(g))

The appropriate maintenance fee must be submitted with this petition.

STATEMENT

THE UNDERSIGNED CERTIFIES THAT THE DELAY IN PAYMENT OF THE MAINTENANCE FEE TO THIS PATENT WAS UNINTENTIONAL

PETITIONER(S) REQUEST THAT THE DELAYED PAYMENT OF THE MAINTENANCE FEE BE ACCEPTED AND THE PATENT REINSTATED

THIS PORTION MUST BE COMPLETED BY THE SIGNATORY OR SIGNATORIES

37 CFR 1.378(d) states: "Any petition under this section must be signed by an attorney or agent registered to practice before the Patent and Trademark Office, or by the patentee, the assignee, or other party in interest."

I certify, in accordance with 37 CFR 1.4(d)(4) that I am

◉ An attorney or agent registered to practice before the Patent and Trademark Office

○ A sole patentee

○ A joint patentee; I certify that I am authorized to sign this submission on behalf of all the other patentees.

○ A joint patentee; all of whom are signing this e-petition

○ The assignee of record of the entire interest

PTO/SB/66 (03-09)
Approved for use through 03/31/2012. OMB 0651-0016
U.S. Patent and Trademark Office: U.S. DEPARTMENT OF COMMERCE
Under the Paperwork Reduction Act of 1995, no persons are required to respond to a collection of information unless it displays valid OMB control number.

Patent Practitioner			
A signature of the applicant or representative is required in accordance with 37 CFR 1.33 and 10.18. Please see 37 CFR 1.4(d) for the form of the signature			
Signature	/Douglas E. Jackson/	Date (YYYY-MM-DD)	2011-05-23
Name	Douglas E. Jackson	Registration Number	28518

This collection of information is required by 37 CFR 1.378(c). The information is required to obtain or retain a benefit by the public which is to file (and by the USPTO to process) an application. Confidentiality is governed by 35 U.S.C. 122 and 37 CFR 1.11 and 1.14. This collection is estimated to take 1 hour to complete, including gathering, preparing, and submitting the completed application form to the USPTO. Time will vary depending upon the individual case. Any comments on the amount of time you require to complete this form and/ or suggestions for reducing this burden, should be sent to the Chief Information Officer, U.S. Patent and Trademark Office, U.S. Department of Commerce, P.O. Box 1450, Alexandria, VA 22313-1450. DO NOT SEND FEES OR COMPLETED FORMS TO THIS ADDRESS. **This form can only be used when in conjunction with EFS-Web. If this form is mailed to the USPTO, it may cause delays in reinstating the patent.**

Privacy Act Statement

The Privacy Act of 1974 (P.L. 93-579) requires that you be given certain information in connection with your submission of the attached form related to a patent application or patent. Accordingly, pursuant to the requirements of the Act, please be advised that: (1) the general authority for the collection of this information is 35 U.S.C. 2(b)(2); (2) furnishing of the information solicited is voluntary; and (3) the principal purpose for which the information is used by the U.S. Patent and Trademark Office is to process and/or examine your submission related to a patent application or patent. If you do not furnish the requested information, the U.S. Patent and Trademark Office may not be able to process and/or examine your submission, which may result in termination of proceedings or abandonment of the application or expiration of the patent.

The information provided by you in this form will be subject to the following routine uses:

1. The information on this form will be treated confidentially to the extent allowed under the Freedom of Information Act (5 U.S.C. 552) and the Privacy Act (5 U.S.C. 552a). Records from this system of records may be disclosed to the Department of Justice to determine whether the Freedom of Information Act requires disclosure of these records.

2. A record from this system of records may be disclosed, as a routine use, in the course of presenting evidence to a court, magistrate, or administrative tribunal, including disclosures to opposing counsel in the course of settlement negotiations.

3. A record in this system of records may be disclosed, as a routine use, to a Member of Congress submitting a request involving an individual, to whom the record pertains, when the individual has requested assistance from the Member with respect to the subject matter of the record.

4. A record in this system of records may be disclosed, as a routine use, to a contractor of the Agency having need for the information in order to perform a contract. Recipients of information shall be required to comply with the requirements of the Privacy Act of 1974, as amended, pursuant to 5 U.S.C. 552a(m).

5. A record related to an International Application filed under the Patent Cooperation Treaty in this system of records may be disclosed, as a routine use, to the International Bureau of the World Intellectual Property Organization, pursuant to the Patent Cooperation Treaty.

6. A record in this system of records may be disclosed, as a routine use, to another federal agency for purposes of National Security review (35 U.S.C. 181) and for review pursuant to the Atomic Energy Act (42 U.S.C. 218(c)).

7. A record from this system of records may be disclosed, as a routine use, to the Administrator, General Services, or his/her designee, during an inspection of records conducted by GSA as part of that agency's responsibility to recommend improvements in records management practices and programs, under authority of 44 U.S.C. 2904 and 2906. Such disclosure shall be made in accordance with the GSA regulations governing inspection of records for this purpose, and any other relevant (i.e., GSA or Commerce) directive. Such disclosure shall not be used to make determinations about individuals.

8. A record from this system of records may be disclosed, as a routine use, to the public after either publication of the application pursuant to 35 U.S.C. 122(b) or issuance of a patent pursuant to 35 U.S.C. 151. Further, a record may be disclosed, subject to the limitations of 37 CFR 1.14, as a routine use, to the public if the record was filed in an application which became abandoned or in which the proceedings were terminated and which application is referenced by either a published application, an application open to public inspections or an issued patent.

9. A record from this system of records may be disclosed, as a routine use, to a Federal, State, or local law enforcement agency, if the USPTO becomes aware of a violation or potential violation of law or regulation.

UNITED STATES PATENT AND TRADEMARK OFFICE

Commissioner for Patents
United States Patent and Trademark Office
P.O. Box 1450
Alexandria, VA 22313-1450
www.uspto.gov

In re Patent No. 6362757
Issue Date: March 26,2002
Application No. 09474398
Filed: December 29,1999
Attorney Docket No. 300055.416

:
:DECISION GRANTING PETITION
:UNDER 37 CFR 1.378(c)
:

This is a decision on the electronic petition, filed March 23,2012 ,under 37 CFR 1.378(c) to accept the unintentionally delayed payment of the 7.5 year maintenance fee for the above-identified patent.

The petition is **GRANTED**.

The maintenance fee is accepted, and the above-identified patent reinstated as of March 23,2012 .
This decision also constitutes notice that the fee has been accepted. An electronic copy of the petition and this decision has been created as an entry in the Image File Wrapper. Nevertheless, petitioner should print and retain an independent copy.

Telephone inquiries related to this electronic decision should be directed to the Electronic Business Center at 1-866-217-9197.

PTO/SB/66 (03-09)
Approved for use through 03/31/2012. OMB 0651-0016
U.S. Patent and Trademark Office: U.S. DEPARTMENT OF COMMERCE
Under the Paperwork Reduction Act of 1995, no persons are required to respond to a collection of information unless it displays valid OMB control number.

PETITION TO ACCEPT UNINTENTIONALLY DELAYED PAYMENT OF MAINTENANCE FEE IN AN EXPIRED PATENT (37 CFR 1.378(c))

Patent Number	Issue Date (YYYY-MM-DD)	Application Number	Filing Date (YYYY-MM-DD)	Docket Number (if applicable)
6362757	2002-03-26	09474398	1999-12-29	012112

CAUTION: Maintenance fee (and surcharge, if any) payment must correctly identify: (1) the patent number and (2) the application number of the actual U.S. application leading to issuance of that patent to ensure the fee(s) is/are associated with the correct patent. 37 CFR 1.366(c) and (d).

SMALL ENTITY

☒ Patentee claims, or has previously claimed, small entity status. See 37 CFR 1.27.

LOSS OF ENTITLEMENT TO SMALL ENTITY STATUS

☐ Patentee is no longer entitled to small entity status. See 37 CFR 1.27(g)

NOT Small Entity	Fee	Code	Small Entity	Fee	Code
○	3 ½ year	(1551)	○	3 ½ year	(2551)
○	7 ½ year	(1552)	◉	7 ½ year	(2552)
○	11 ½ year	(1553)	○	11 ½ year	(2553)

SURCHARGE

The surcharge required by 37 CFR 1.20(i)(2) (Fee Code 1558) must be paid as a condition of accepting unintentionally delayed payment of the maintenance fee.

MAINTENANCE FEE (37 CFR 1.20(e)-(g))

The appropriate maintenance fee must be submitted with this petition.

STATEMENT

THE UNDERSIGNED CERTIFIES THAT THE DELAY IN PAYMENT OF THE MAINTENANCE FEE TO THIS PATENT WAS UNINTENTIONAL

PETITIONER(S) REQUEST THAT THE DELAYED PAYMENT OF THE MAINTENANCE FEE BE ACCEPTED AND THE PATENT REINSTATED

THIS PORTION MUST BE COMPLETED BY THE SIGNATORY OR SIGNATORIES

37 CFR 1.378(d) states: "Any petition under this section must be signed by an attorney or agent registered to practice before the Patent and Trademark Office, or by the patentee, the assignee, or other party in interest."

I certify, in accordance with 37 CFR 1.4(d)(4) that I am

◉ An attorney or agent registered to practice before the Patent and Trademark Office

○ A sole patentee

○ A joint patentee; I certify that I am authorized to sign this submission on behalf of all the other patentees.

○ A joint patentee; all of whom are signing this e-petition

○ The assignee of record of the entire interest

PTO/SB/66 (03-09)
Approved for use through 03/31/2012. OMB 0651-0016
U.S. Patent and Trademark Office: U.S. DEPARTMENT OF COMMERCE
Under the Paperwork Reduction Act of 1995, no persons are required to respond to a collection of information unless it displays valid OMB control number.

Patent Practitioner			
A signature of the applicant or representative is required in accordance with 37 CFR 1.33 and 10.18. Please see 37 CFR 1.4(d) for the form of the signature			
Signature	/Douglas X. Rodriguez/	Date (YYYY-MM-DD)	2012-03-23
Name	Douglas X. Rodriguez	Registration Number	47269

This collection of information is required by 37 CFR 1.378(c). The information is required to obtain or retain a benefit by the public which is to file (and by the USPTO to process) an application. Confidentiality is governed by 35 U.S.C. 122 and 37 CFR 1.11 and 1.14. This collection is estimated to take 1 hour to complete, including gathering, preparing, and submitting the completed application form to the USPTO. Time will vary depending upon the individual case. Any comments on the amount of time you require to complete this form and/ or suggestions for reducing this burden, should be sent to the Chief Information Officer, U.S. Patent and Trademark Office, U.S. Department of Commerce, P.O. Box 1450, Alexandria, VA 22313-1450. DO NOT SEND FEES OR COMPLETED FORMS TO THIS ADDRESS. **This form can only be used when in conjunction with EFS-Web. If this form is mailed to the USPTO, it may cause delays in reinstating the patent.**

Privacy Act Statement

The Privacy Act of 1974 (P.L. 93-579) requires that you be given certain information in connection with your submission of the attached form related to a patent application or patent. Accordingly, pursuant to the requirements of the Act, please be advised that: (1) the general authority for the collection of this information is 35 U.S.C. 2(b)(2); (2) furnishing of the information solicited is voluntary; and (3) the principal purpose for which the information is used by the U.S. Patent and Trademark Office is to process and/or examine your submission related to a patent application or patent. If you do not furnish the requested information, the U.S. Patent and Trademark Office may not be able to process and/or examine your submission, which may result in termination of proceedings or abandonment of the application or expiration of the patent.

The information provided by you in this form will be subject to the following routine uses:

1. The information on this form will be treated confidentially to the extent allowed under the Freedom of Information Act (5 U.S.C. 552) and the Privacy Act (5 U.S.C. 552a). Records from this system of records may be disclosed to the Department of Justice to determine whether the Freedom of Information Act requires disclosure of these records.

2. A record from this system of records may be disclosed, as a routine use, in the course of presenting evidence to a court, magistrate, or administrative tribunal, including disclosures to opposing counsel in the course of settlement negotiations.

3. A record in this system of records may be disclosed, as a routine use, to a Member of Congress submitting a request involving an individual, to whom the record pertains, when the individual has requested assistance from the Member with respect to the subject matter of the record.

4. A record in this system of records may be disclosed, as a routine use, to a contractor of the Agency having need for the information in order to perform a contract. Recipients of information shall be required to comply with the requirements of the Privacy Act of 1974, as amended, pursuant to 5 U.S.C. 552a(m).

5. A record related to an International Application filed under the Patent Cooperation Treaty in this system of records may be disclosed, as a routine use, to the International Bureau of the World Intellectual Property Organization, pursuant to the Patent Cooperation Treaty.

6. A record in this system of records may be disclosed, as a routine use, to another federal agency for purposes of National Security review (35 U.S.C. 181) and for review pursuant to the Atomic Energy Act (42 U.S.C. 218(c)).

7. A record from this system of records may be disclosed, as a routine use, to the Administrator, General Services, or his/her designee, during an inspection of records conducted by GSA as part of that agency's responsibility to recommend improvements in records management practices and programs, under authority of 44 U.S.C. 2904 and 2906. Such disclosure shall be made in accordance with the GSA regulations governing inspection of records for this purpose, and any other relevant (i.e., GSA or Commerce) directive. Such disclosure shall not be used to make determinations about individuals.

8. A record from this system of records may be disclosed, as a routine use, to the public after either publication of the application pursuant to 35 U.S.C. 122(b) or issuance of a patent pursuant to 35 U.S.C. 151. Further, a record may be disclosed, subject to the limitations of 37 CFR 1.14, as a routine use, to the public if the record was filed in an application which became abandoned or in which the proceedings were terminated and which application is referenced by either a published application, an application open to public inspections or an issued patent.

9. A record from this system of records may be disclosed, as a routine use, to a Federal, State, or local law enforcement agency, if the USPTO becomes aware of a violation or potential violation of law or regulation.

UNITED STATES PATENT AND TRADEMARK OFFICE

COMMISSIONER FOR PATENTS
UNITED STATES PATENT AND TRADEMARK OFFICE
P.O. BOX 1450
ALEXANDRIA, VA 22313-1450
www.uspto.gov

PATENT LAW OFFICES OF DAVID MILLERS
1221 Sun Ridge Road
Placerville CA 95667

MAILED

SEP 21 2010

OFFICE OF PETITIONS

In re Patent No. 6,363,036
Issue Date: March 26, 2002
Application No. 09/474,522
Filed: December 29, 1999
Atty. Dkt. No. LTL001US

DECISION ON PETITION
UNDER 37 CFR 1.378(b)

This is a decision on the petition under 37 CFR 1.378(b), filed March 26, 2010.

The petition under 37 CFR 1.378(b) for reinstatement of expired patent is hereby **DISMISSED**.

If reconsideration of this decision is desired, a petition for reconsideration under 37 CFR 1.378(e) must be filed within TWO (2) MONTHS from the mail date of this decision. No extension of this 2-month time limit can be granted under 37 CFR 1.136(a) or (b). **Any such petition for reconsideration must be accompanied by the petition fee of $400 as set forth in 37 CFR 1.17(f).** The petition for reconsideration should include an exhaustive attempt to provide the lacking item(s) noted below, since, after a decision on the petition for reconsideration, no further reconsideration or review of the matter will be undertaken by the Director.

The patent issued March 26, 2002. The 3.5 year maintenance fee could have been paid from March 26, 2005 through September 26, 2005 without a surcharge, or with a surcharge during the period from September 27, 2005 through March 26, 2006. Accordingly, the patent expired on March 26, 2006 for failure to timely submit the second maintenance fee.

A petition to accept the delayed payment of a maintenance fee under 35 U.S.C. § 41(c) and 37 CFR 1.378(b) must be accompanied by (1) an adequate showing that the delay was unavoidable, since reasonable care was taken to ensure that the maintenance fee would be paid timely and that the petition was filed promptly after the patentee was notified of, or otherwise became aware of, the expiration of the patent, (2) payment of the appropriate maintenance fee, unless previously submitted, and (3) payment of the surcharge set forth in 37 CFR 1.20(i)(1).

This petition lacks item requirement (1) set forth above.

The Director may accept late payment of the maintenance fee if the delay is shown to the satisfaction of the Director to have been "unavoidable". 35 U.S.C. § 41(c)(1).

Petitioner asserts that LightTime, LLC is the owner of the instant patent. Petitioner asserts that "contrary to the representations of" prior counsel John W. Eldredge, the maintenance fee due March 26, 2006 was not paid. The petition and exhibits assert that fees were paid to Attorney Eldredge ($24,412 in 2005 to the law firm of Meyers, Dawes, Andras and Sherman LLP, where Attorney

Eldredge purportedly was employed from 2003 to late 2005 or early 2006 and $4000 to Attorney Eldredge, who purportedly was self-employed from late 2005 to early 2006, in 2006).

Attorney Eldredge was Vice President and General Counsel for LightTime, LLC. Attorney Eldredge is said to have provided periodic status reports to the President and CEO of LightTime, LLC, Clark Caflisch.

Patentee first suspected there was a problem May 1, 2009 due to failure to receive return phone calls from or otherwise maintain contact with Attorney Eldredge.

In this regard, Clark Caflisch declares:

> "I have been unable to contact Mr. Eldredge since or about May 1, 2009. Since about May 1, 2009, I have sent numerous emails and made numerous telephone calls to Mr. Eldredge without receiving any reply. While traveling in California, I drove to Mr. Eldredge's home and his house unoccupied. As a result of on-line searches since May 1, 2009, I now believe that Mr. Eldredge was divorced on April 24, 2009, the property taxes on his home have not been paid in several years, and Mr. Eldredge is no longer a member of the California State Bar. These problems may have begun when Mr. Eldredge's daughter went missing while surfing in Hawaii, the apparent victim of a shark attack on April 4, 2004. In spite of the distressing events of that time, Mr. Eldredge continued to represent to me and I believed that LightTime's patent portfolio was being properly managed."

Attorney Eldredge is said to have ceased representing patentee in July 2009 when patentee sought new counsel. Patentee hired new counsel, David Millers, on December 1, 2009. Patentee was first informed that the patent was expired by new counsel on December 15, 2009.

Clark Caflisch also references a meeting with Mr. Eldredge on December 3, 2008 and has provided a copy of a spreadsheet provided at that time by Mr. Eldredge. The spreadsheet is said to show LightTime, LLC patent matters, including the instant patent.

Patentee appears to attribute the failure to timely pay the 3.5 year maintenance fee to the inactions of prior counsel John W. Eldredge. However, the showing of record is inadequate to establish unavoidable delay within the meaning of 37 CFR 1.378(b)(3).

Acceptance of late payment of a maintenance fee is considered under the same standard as that for reviving an abandoned application under 35 U.S.C. § 133 because 35 U.S.C. § 41(c)(1) uses the identical language, i.e. "unavoidable delay". Ray v. Lehman, 55 F.3d 606, 608-09, 34 USPQ2d 1786, 1787 (Fed. Cir. 1995)(quoting In re Patent No. 4,409,763, 7 USPQ2d 1798, 1800 (Comm'r Pat. 1988)). Decisions on reviving abandoned applications have adopted the "reasonably prudent person" standard in determining if the delay in responding to an Office action was unavoidable. Ex parte Pratt, 1887 Dec. Comm'r Pat. 31, 32-33 (Comm'r Pat. 1887)(the term "unavoidable" "is applicable to ordinary human affairs, and requires no more or greater care or diligence than is generally used and observed by prudent and careful men in relation to their most important business"); In re Mattullath, 38 App. D.C. 497, 514-515 (D.C. Cir. 1912); and Ex parte Henrich, 1913 Dec. Comm'r Pat. 139, 141. In addition, decisions on revival are made on a "case-by-case basis, taking all the facts and circumstances into account." Smith v. Mossinghoff, 671 F.2d 533, 538, 213 USPQ 977, 982 (D.C. Cir. 1982). Finally, a petition to revive an application as unavoidably abandoned cannot be granted

where a petitioner has failed to meet his or her burden of establishing the cause of the unavoidable delay. Haines v. Quigg, 673 F. Supp. 314, 316-17, 5 USPQ2d 1130, 1131-32 (N.D. Ind. 1987).

In essence, patentee must show that he was aware of the need to pay the maintenance fee, and to that end was tracking it, or had engaged someone to track it before the expiration, but when the fee came due, was "unavoidably" prevented from making the maintenance fee payment from the time the payment was due until the filing of a grantable petition. Petitioner has failed to meet this burden.

Patentee first became aware that the patent was expired on December 1, 2009 when so informed by counsel.

Patentee indicates that Attorney Eldredge did not have authority to "abandon a patent or a patent application" without approval.

To the extent that Attorney Eldredge was engaged by patentee to track the maintenance fee due date of the instant patent, there is nothing in the record that establishes that the attorneys had steps in place to ensure timely payment of the maintenance fee. Thus, it cannot be found that it was reasonable for patentee to rely upon Attorney Eldredge for the purpose of tracking the maintenance fee due date.

Did patentee, who bears the ultimate responsibility for ensuring timely payment of the maintenance fee, make any inquiries of Attorney Eldredge or the Patent and Trademark Office to determine when and if the maintenance fee was due?

While patentee references a meeting held December 3, 2008 and a spreadsheet, Exhibit B, said meeting occurred subsequent to the expiration of the patent. Moreover, insofar as the spreadsheet references the instant patent, it merely states that the patent was "issued." The spreadsheet does not speak to the due date for maintenance fee payments. Moreover, Clark Caflisch asserts that Attorney Eldredge provided "periodic status reports." Specific information, such as dates when the reports were provided, details on what the reports consisted of, and copies of the reports, have not been provided.

The record does not support Clark Caflisch's speculation that Attorney Eldredge's "problems may have been when Mr. Eldredge's daughter went missing while surfing in Hawaii, the apparent victim of a shark attack on April 4, 2004." Moreover, to the extent that Attorney Eldredge was preoccupied with other matters that were given priority over the instant patent, such preoccupation does not constitute unavoidable delay. See, Smith v. Mossinghoff, 671 F.2d 533, 538, 213 USPQ 977, 982 (D.C. Cir. 1982).

The record does not support Clark Caflisch's assertion that fees were paid to Attorney Eldredge in 2005 and 2006. Moreover, the petition fails to establish the purpose of the alleged payments. Specifically, there is no indication that the $24,412 paid to the law firm of Meyers, Dawes, Andras and Sherman LLC or the $4,000 paid to Attorney Eldredge in 2006 were paid for the purpose of paying the maintenance fee for the instant patent.

As to petitioner's assertion of non-receipt of any USPTO notice that the maintenance fee was due, petitioner is reminded per MPEP 2575 that:

> "Under the statutes and the regulations, the Office has no duty to notify patentees when their maintenance fees are due. It is the responsibility of the patentee to ensure that the maintenance fees are paid to prevent expiration of the patent. The Office will, however, provide some notices as reminders that maintenance fees are due, but the notices, errors in the notices or in their delivery, or the lack or tardiness of notices will in no way relieve a patentee from the responsibility to make timely payment of each maintenance fee to prevent the patent from expiring by operation of law. The notices provided by the Office are courtesies in nature and intended to aid patentees. The Office's provision of notices in no way shifts the burden of monitoring the time for paying maintenance fees on patents from the patentee to the Office."

In other words, failure to receive a Maintenance Fee Reminder will not relieve the patentee of the obligation to timely pay the appropriate maintenance fee to prevent expiration of the patent, nor will it constitute unavoidable delay if the patentee seeks to reinstate the patent under 37 CFR 1.378(b). See, In re Patent No. 4,409,763, 7 USPQ2d 1798 (Comm'r Pat. 1988), aff'd sub nom. Rydeen v. Quigg, 748 F. Supp. 900, 16 USPQ2d 1876 (D.D.C. 1990), aff'd, 937 F.2d 623 (Fed. Cir. 1991) (table), cert. denied, 502 U.S. 1075 (1992).

In determining whether a delay in paying a maintenance fee was unavoidable, one looks to whether the party responsible for payment of the maintenance fee exercised the due care of a reasonably prudent person. Ray, 55 F3d at 608-609, 34 USPQ2D at 1787. It is incumbent upon the patent owner to implement steps to schedule and pay the fee, or obligate another to do so. See California Medical Products v. Technol. Med. Prod., 921 F.Supp 1219, 1259 (D. Del. 1995). That is, 37 CFR 1.378(b)(3) requires a showing of the steps in place to pay the maintenance fee, and the record currently lacks a sufficient showing that any steps were emplaced by petitioner or anyone else. In the absence of a showing that patentee or anyone else was engaged in tracking the maintenance fee due dates, and that party had in fact been tracking the due dates with a reliable tracking system, such as would be used by prudent and careful men in relation to their most important business, petitioner cannot reasonably show that the delay was unavoidable delay. In re Katrapat, 6 USPQ2d 1863, 1867-1868 (Comm'r Pat. 1988); California, supra. Put otherwise, the lack of communication between patentee and Attorney Eldredge and even Attorney Eldredge's alleged preoccupation with other matters is immaterial in the absence of a showing that there were steps in place to ensure timely payment of the fee.

Petitioner has not provided any documentary evidence demonstrating the nature and extent of contractual obligations of the attorneys to establish that the attorneys were contractually bound to track the maintenance fee on behalf of patentee. Petitioner has failed to demonstrate that the party responsible for paying the maintenance fee, Mr. Eldredge, had implemented steps to schedule and pay the maintenance fee.

Ultimately patentee bears the responsibility for timely remittance of the maintenance fee. The petition fails to establish that patentee was unavoidably delayed in making the payment. Accordingly, the Office is precluded from accepting the maintenance fee and surcharge. If reconsideration of this decision is not desired, petitioner may request a refund of this fee by writing to the Finance Office, Refund Section. A copy of this decision should accompany any request for refund.

Any renewed petition must establish that the entire period of delay from the time that the maintenance fee was due until the time of the filing of a grantable petition has been unavoidable. Petitioner is reminded that any renewed petition should entail an exhaustive effort to establish that

the failure to timely pay the maintenance fee was unavoidable as after reconsideration pursuant to 37 CFR 1.378(e), no further reconsideration regarding unavoidable delay will be undertaken.

Petitioner must establish that patentee was aware of the need to pay the maintenance fee, and was tracking it, or had engaged someone to track it before the expiration, but when the fee came due, was "unavoidably" prevented from making the maintenance fee payment due until the filing of a grantable petition. Petitioner must establish a nexus between the events complained of and the failure to timely remit the maintenance fee.

Petitioner may wish to submit statements of facts from his attorneys; copies of any contractual agreements between the attorneys and patentee whereby the attorneys was engaged to track the maintenance fee; copies of any reminder letters received from the attorneys to patentee concerning maintenance fees for the patent; and, a detailed statement concerning the system in place for tracking the maintenance fee.

Any renewed petition must establish that the entire period of delay from the time that the maintenance fee was due until the time of the filing of a grantable petition has been unavoidable. Petitioner is reminded that any renewed petition should entail an exhaustive effort to establish that the failure to timely pay the maintenance fee was unavoidable as after reconsideration pursuant to 37 CFR 1.378(e), no further reconsideration regarding unavoidable delay will be undertaken.

Further correspondence with respect to this matter should be addressed as follows:

By mail:
Mail Stop PETITIONS
Commissioner for Patents
Post Office Box 1450
Alexandria, VA 22313-1450

By hand:
Customer Service Window
Mail Stop Petitions
Randolph Building
401 Dulany Street
Alexandria, VA 22314

By fax:
(571) 273-8300
ATTN: Office of Petitions

The requested revocation of power of attorney/change of address has been entered into the record.

Any questions concerning this matter may be directed to the undersigned at (571) 272-3205.

/ALESIA M. BROWN/

Alesia M. Brown
Petitions Attorney
Office of Petitions

UNITED STATES PATENT AND TRADEMARK OFFICE

COMMISSIONER FOR PATENTS
UNITED STATES PATENT AND TRADEMARK OFFICE
P.O. BOX 1450
ALEXANDRIA, VA 22313-1450
www.uspto.gov

MAILED

JUN 13 2011

OFFICE OF PETITIONS

PATENT LAW OFFICES OF DAVID MILLERS
1221 Sun Ridge Road
Placerville CA 95667

In re Patent No. 6,363,036	:
Issue Date: March 26, 2002	: REQUEST FOR INFORMATION
Application No. 09/474,522	:
Filed: December 29, 1999	:
Atty. Dkt. No. LTL001US	:

This letter is in response to the petition under 37 CFR 1.378(e), filed November 19, 2010. The required petition fee of $400.00 has been charged to the authorized deposit account.

Prior to a decision on the merits of the petition under 37 CFR 1.378(e), additional information and/or supporting documentation is required.

Petitioner is given **TWO MONTHS** to comply. Extensions of time under 37 CFR 1.136(a) or (b) **will not** be permitted. The reply to this letter should be directed to the Office of Petitions.

A finding of unavoidable delay requires, *inter alia*, a showing that steps were implemented to schedule and pay the maintenance fee. As indicated in the decision on petition mailed September 21, 2010, 37 CFR 1.378(b)(3) requires a showing of the steps in place to pay the maintenance fee. Petitioner must enumerate the steps taken to ensure that the maintenance fee would be timely paid. In this regard, petitioners should establish who was responsible for determining whether or not the maintenance fee would be paid and how this information was conveyed to the party responsible for remitting the payment. Petitioner should advise for what purpose Mr. Eldridge was given funds in 2006. If funds given were given to Mr. Eldridge for the purpose of paying the maintenance fee for the instant patent, petitioner should provide evidence thereof. Petitioner must clearly establish what procedures were in place for ensuring the timely payment of the maintenance fee.

Further correspondence with respect to this matter should be addressed as follows:

By mail: Mail Stop PETITIONS
Commissioner for Patents
Post Office Box 1450
Alexandria, VA 22313-1450

By hand: Customer Service Window
Mail Stop Petitions
Randolph Building
401 Dulany Street
Alexandria, VA 22314

By fax: (571) 273-8300
ATTN: Office of Petitions

The requested revocation of power of attorney/change of address has been entered into the record.

Any questions concerning this matter may be directed to the undersigned at (571) 272-3205.

/ALESIA M. BROWN/

Alesia M. Brown
Attorney Advisor
Office of Petitions

UNITED STATES PATENT AND TRADEMARK OFFICE

Commissioner for Patents
United States Patent and Trademark Office
P.O. Box 1450
Alexandria, VA 22313-1450
www.uspto.gov

PATENT LAW OFFICES OF DAVID MILLERS
1221 Sun Ridge Road
Placerville CA 95667

MAILED
SEP 22 2011
OFFICE OF PETITIONS

In re Patent No. 6,363,036 :
Issued: March 26, 2002 :
Application No. 09/474,522 : ON PETITION
Filed: December 29, 1999 :
Atty. Dkt. No.: LTL001US :

This is a decision on the petition and supplement under 37 CFR 1.378(e), filed November 19, 2010 and August 12, 2011.

The petition is **DENIED**[1].

BACKGROUND

The patent issued March 26, 2002. The 3.5 year maintenance fee could have been paid from March 26, 2005 to September 26, 2005 without a surcharge or from September 27, 2005 to March 26, 2006 with a surcharge. The maintenance fee, however, was not submitted. Accordingly, the patent expired March 26, 2006 for failure to timely submit the 3.5-year maintenance fee.

A petition under 37 CFR 1.378(b) to accept late payment of the maintenance fee was filed March 26, 2010. A decision dismissing the petition under 37 CFR 1.378(b) was mailed September 21, 2010 and is hereby incorporated by reference.

STATUTE, REGULATION, AND EXAMINING PROCEDURE

In accordance with 35 USC 41(c)(1), "[t]he Director may accept the payment of any maintenance fee required by subsection (b) of this section which is made within twenty-four months after the six-month grace period if the delay is shown to the satisfaction of the Director to have been unintentional, or at any time after the six-month grace period if the delay is shown to the satisfaction of the Director to have been unavoidable. The Director may require the payment of a surcharge as a condition of accepting payment of any maintenance fee after the six-month grace period. If the Director accepts payment of a maintenance fee after the six-month grace period, the patent shall be considered as not having expired at the end of the grace period."

[1] This decision may be viewed as a final agency action within the meaning of 5 U.S.C. § 704 for purposes of seeking judicial review. *See*, MPEP 1002.02.

In accordance with 37 CFR 1.378(b), "[a]ny petition to accept an unavoidably delayed payment of a maintenance fee filed under paragraph (a) of this section must include: (1) The required maintenance fee set forth in § 1.20 (e) through (g); (2) The surcharge set forth in § 1.20(i)(1); and (3) A showing that the delay was unavoidable since reasonable care was taken to ensure that the maintenance fee would be paid timely and that the petition was filed promptly after the patentee was notified of, or otherwise became aware of, the expiration of the patent. The showing must enumerate the steps taken to ensure timely payment of the maintenance fee, the date and the manner in which patentee became aware of the expiration of the patent, and the steps taken to file the petition promptly."

FACTS

Petitioner under 37 CFR 1.378(e) in seeking reconsideration of the decision under 37 CFR 1.378(b) attributes the failure to timely pay the maintenance fee to actions and inactions of patentee's former attorney John W. Eldredge.

Petitioner asserts that LightTime, LLC is the owner of the instant patent. Attorney Eldredge, Vice President and General Counsel for LightTime, LLC, provided periodic status reports to the President and CEO of LightTime, LLC, Clark Caflisch. The petition and exhibits assert that various fees were paid to Attorney Eldredge between 2005 and 2006. Mr. Caflisch met with Attorney Eldredge most recently on December 3, 2008. Attorney Eldredge never advised Mr. Caflisch that the maintenance fee for the instant patent was due.

Mr. Caflisch has been unable to make contact with Attorney Eldredge via telephone or email since on or about May 1, 2009. Patentee hired new patent counsel, David Millers, on or about December 1, 2009. Patentee was informed by counsel on or about December 15, 2009 that the instant patent was expired.

Petitioner has provided copies of several spreadsheets provided to Mr. Caflisch by Attorney Eldredge. The spreadsheets found at Exhibits B, C, and D purport to show that the status of the instant patent. Petitioner has further provided at Exhibit E, a copy of status report, which Mr. Calfisch states was given to him on or about April 8, 2003 by Attorney Eldredge. The status report at Exhibit E denotes, *inter alia*, that the maintenance fee due date for the instant patent is September 26, 2005.

Mr. Caflisch indicates that instructions to handle patent matters such as payments of maintenance fees were conveyed to him by Attorney Eldredge. Mr. Caflisch indicates that Attorney Eldredge never advised that the maintenance fee for the instant patent was due; therefore, Mr. Caflisch never gave Attorney Eldredge instructions to pay the maintenance fee.

OPINION

The Director may accept late payment of the maintenance fee if the delay is shown to the satisfaction of the Director to have been "unavoidable.[2]" Moreover, a late maintenance fee is considered under the same standard as that for reviving an abandoned application under 35

[2] 35 U.S.C. 41(c)(1).

U.S.C. 133 because 35 U.S.C. 41(c)(1) uses the identical language, i.e., "unavoidable" delay[3]. Decisions on reviving abandoned applications have adopted the reasonably prudent person standard in determining if the delay was unavoidable[4]. Further, decisions on revival are made on a "case-by-case basis, taking all the fact and circumstances into account[5]." Finally, a petition to revive an application as unavoidably abandoned cannot be granted where a petition has failed to meet his or her burden of establishing the cause of the unavoidable delay[6].

In determining whether a delay in paying a maintenance fee was unavoidable, one looks to whether the party responsible for payment of the maintenance fee exercised the due care of a reasonably prudent person. Ray, 55 F3d at 608-609, 34 USPQ2D at 1787. It is incumbent upon the patent owner to implement steps to schedule and pay the fee, or obligate another to do so. See California Medical Products v. Technol. Med. Prod., 921 F.Supp 1219, 1259 (D. Del. 1995). That is, 37 CFR 1.378(b)(3) requires a showing of the steps in place to pay the maintenance fee, and the record currently lacks a sufficient showing that any steps were emplaced by petitioner or anyone else. In the absence of a showing that patentee or anyone else was engaged in tracking the maintenance fee due dates, and that party had in fact been tracking the due dates with a reliable tracking system, such as would be used by prudent and careful men in relation to their most important business, petitioner cannot reasonably show that the delay was unavoidable delay. In re Katrapat, 6 USPQ2d 1863, 1867-1868 (Comm'r Pat. 1988); California, supra.

In essence, patentee must show that he was aware of the need to pay the maintenance fee, and to that end was tracking it, or had engaged someone to track it before the expiration, but when the fee came due, was "unavoidably" prevented from making the maintenance fee payment from the time the payment was due until the filing of a grantable petition. Petitioner has failed to meet this burden.

Patentee, who is ultimately responsible for ensuring that the maintenance fee would be timely paid, has failed to establish that there was a system in place that would ensure that the maintenance fee would be timely paid. To the extent that patentee relied on Attorney Eldredge to advise of the maintenance fee due date, there is no evidence in the record that establishes that Attorney Eldredge had a system in place to track the maintenance fee due date.

The copies of documents provided at Exhibits B, C, D, and E appear to be status reports given to patentee at various times prior to and subsequent to the maintenance fee due date. Nothing in these documents leads to the conclusion that they were part of a system in place by Attorney Eldredge to track the maintenance fee due date.

Furthermore, the status report found at Exhibit E, which Mr. Caflisch acknowledges receiving prior to the maintenance fee due date, clearly indicates that there will be a maintenance fee due

---

[3] See, Ray v. Lehman, 55 F3d 606, 608-609, 34 USPQ2d 1786, 1787 (Fed. Cir. 1995)(quoting In re Patent No. 4,409,763, 7 USPQ2d 1798, 1800 (Comm'r Pat. 1988)).

[4] See, Ex parte Pratt, 1887 Dec. Comm'r Pat. 31, 32-33 (Comm'r Pat. 1887)(the term "unavoidable" "is applicable to ordinary human affairs, and requires no more or greater care or diligence than is generally used and observed by prudent and careful men in relation to their most important business"; In re Mattullath, 38 App. D.C. 497, 514-515 (D.C. Cir. 1912), Ex parte Henrich, 1913 Dec. Comm'r Pat. 139, 141 (Comm'r Pat. 1913).

[5] See, Smith v. Mossinghoff, 671 F.2d 533, 213 USPQ 977, 982 (D.C. Cir. 1982).

[6] See, Haines v. Quigg, 673 F.Supp. 314, 5 USPQ2d 1130 (N.D. Ind. 1987).

in the instant patent. Thus, Attorney Eldredge did give patentee notice of the pending maintenance fee due date. There is no explanation given for why patentee did not take action to pay the maintenance fee, having been given notice of the maintenance fee due date by Attorney Eldredge by way of the status report found at Exhibit E. Further, there is nothing in the record to establish that the status report was not the extent of Attorney Eldredge's obligation to patentee as concerns the maintenance fee.

To the extent that patentee engaged Attorney Eldredge to track the maintenance fee due date for the instant patent, there is nothing in the record that establishes that Attorney Eldredge had steps in place to ensure timely payment of the maintenance fee. Thus, it cannot be found that it was reasonable for patentee to rely on Attorney Eldredge for the purpose of tracking the maintenance fee. Further, there is nothing in the record to establish that patentee, who bears the ultimate responsibility for ensuring timely payment of the maintenance fee, made specific inquiry of Attorney Eldredge to determine when and if the maintenance fee was due, despite having received a status report advising patentee of the maintenance fee due date.

The status reports found at Exhibits B, C, D, and E do not in and of themselves establish that Attorney Eldredge was maintaining a system with the purpose of tracking the maintenance fee and advising patentee of its due date. The declarations provided on petition do not speak to a system in place to track the maintenance fee due date. The declarations discuss periodic meetings with Attorney Eldredge where it does not appear that the maintenance fee was even a focus of discussion. Frankly, absent a finding that Attorney Eldredge, who was engaged to advise patentee on patent matters, had in place a system to track the maintenance fee due, it cannot be found that the failure to pay the maintenance fee was unavoidably delayed.

Patentee advises of "periodic" status updates from Attorney Eldredge and reference dealings with Attorney Eldredge in 2005 or 2006 and 2008. By 2009, patentee was out of contact with Attorney Eldredge. This lack of miscommunication, in essence, a failure to communicate adequately, between Attorney Eldredge and patentee is immaterial in the absence of a showing that (1) the miscommunication could not be avoided and (2) failure to timely pay the maintenance fee was not due to a lack of any steps in place to pay the fee. A failure in communication is not considered to be unavoidable delay. See, In re Kim, 12 USPQ 2d 1595, (Comm. Pat. 1988).

It cannot be concluded that the miscommunication between patentee and Attorney Eldredge could not have been avoided because petitioner makes no explanation as to why patentee only had "periodic" dealings with Attorney Eldredge.

Further, it cannot be concluded that Attorney Eldredge had steps in place to track the maintenance fee due date as petitioner fails to make a sufficient showing to this effect.

In view of the totality of evidence of record, it cannot be found that the entire period of time, from the time that the maintenance fee was due until the filing of the instant petition, was unavoidable within the meaning of 35 USC 41 and 37 CFR 1.378(b).

DECISION

The prior decision dismissing petition under 37 CFR 1.378(b) to accept delayed payment of maintenance fee has been reconsidered. For the reasons set forth herein the delay in payment of the maintenance fee cannot be regarded a unavoidable within the meaning of 35 USC 41 and 37 CFR 1.378(b). Accordingly, the offer to pay the delayed maintenance fee will not be accepted and this patent will not be reinstated.

As the petition for reconsideration of the refusal to reinstate the patent has been denied, the USPTO is precluded from retaining the previously submitted maintenance fee in the amount of $1,190.00. Petitioner is therefore entitled to a refund. Petitioner may request a refund of $1,190.00 by writing to the Finance Office, Refund Section. A copy of this decision should accompany any request for refund.

Telephone inquiries concerning this matter may be directed to Attorney Advisor Alesia M. Brown at 571-272-3205.

Anthony Knight
Director
Office of Petitions

UNITED STATES PATENT AND TRADEMARK OFFICE

Commissioner for Patents
United States Patent and Trademark Office
P.O. Box 1450
Alexandria, VA 22313-1450
www.uspto.gov

WALTER RAY QUICK
P.O. BOX 470
CANON CITY, CO 81215

MAILED

FEB 14 2011

OFFICE OF PETITIONS

In re Patent No. 6,305,703 : Paper No. 10
Issue Date: October 23, 2001 :
Application No. 09/475,173 : DECISION ON PETITION
Filed: December 30, 1999 :
Attorney Docket No. **BIC-TRL** :

This is a decision on the petition under 37 CFR 1.378(c), filed November 17, 2010, with a certificate of mailing dated November 11, 2010, to accept the delayed payment of a maintenance fee for the above-identified patent.

The petition is **DISMISSED**.

If reconsideration of this decision is desired, a petition for reconsideration under 37 CFR 1.378(e) must be filed within TWO (2) MONTHS from the mail date of this decision. No extension of this two-month time limit can be granted under 37 CFR 1.136(a) or (b). This is **not** a final agency action within the meaning of 5 U.S.C. § 704.

Any petition for reconsideration of this decision must be accompanied by the petition fee of $400 as set forth in 37 CFR 1.17(f). The petition for reconsideration must include the lacking item(s) noted below, since, after a decision on the petition for reconsideration, no further reconsideration or review of the matter will be undertaken by the Director.

This patent expired at midnight on October 23, 2009for failure to pay the seven and one-half year maintenance fee. Since this petition was submitted within twenty-four months after the six-month grace period provided in 37 CFR 1.362(e), the petition was timely filed under the provisions of 37 CFR 1.378(c).

A petition to accept the unintentionally delayed payment of a maintenance fee under 35 U.S.C. 41(c) and 37 CFR 1.378(c) must be accompanied by: (1) a statement that the delay was unintentional; (2) payment of the appropriate maintenance fee, unless previously submitted; (3) payment of the surcharge set forth in 37 CFR 1.20(i)(2). This petition lacks item (1) above.

As to item (1) the statement of unintentional delay is presently not acceptable since it was not signed by all of the inventors and, the record herein fails to disclose that the one signing the instant petition has been given a power of attorney by the other applicant. See 37 CFR 1.33(b) which states:

(b) Amendments and other papers. Amendments and other papers, except for written assertions pursuant to § 1.27(c)(2)(ii) of this part, filed in the application must be signed by:

(1) A registered patent attorney or patent agent of record appointed in compliance with § 1.32(b);

(2) A registered patent attorney or patent agent not of record who acts in a representative capacity under the provisions of § 1.34;

(3) An assignee as provided for under §3.71(b) of this chapter; or

(4) All of the applicants (§ 1.41(b)) for patent, unless there is an assignee of the entire interest and such assignee has taken action in the application in accordance with § 3.71 of this chapter.

Further correspondence with respect to this matter should be addressed as follows:

By Mail:
Mail Stop PETITION
Commissioner for Patents
Post Office Box 1450
Alexandria, VA 22313-1450

By hand:
U. S. Patent and Trademark Office
Customer Service Window, Mail Stop Petitions
Randolph Building
401 Dulany Street
Alexandria, VA 22314

The centralized facsimile number is (571) 273-8300.

Telephone inquiries should be directed to Tredelle Jackson at 571-272-2783.

Ramesh Krishnamurthy
Petitions Examiner
Office of Petitions

UNITED STATES PATENT AND TRADEMARK OFFICE

Commissioner for Patents
United States Patent and Trademark Office
P.O. Box 1450
Alexandria, VA 22313-1450
www.uspto.gov

WALTER RAY QUICK
P.O. BOX 470
CANON CITY, CO 81215

MAILED

APR 22 2011

OFFICE OF PETITIONS

In re Patent No. 6,305,703 :
Issue Date: October 23, 2001 :
Application No. 09/475,173 : DECISION ON PETITION
Filed: December 30, 1999 :
Attorney Docket No. **BIC-TRL** :

This is a decision on the renewed petition under 37 CFR 1.378(c), filed February 22, 2011, to accept the unintentionally delayed payment of a maintenance fee for the above-identified patent.

The petition is **GRANTED**.

This patent expired at midnight on October 23, 2009 for failure to pay the seven and one-half year maintenance fee. Since this petition was submitted within twenty-four months after the six-month grace period provided in 37 CFR 1.362(e), the petition was timely filed under the provisions of 37 CFR 1.378(c).

The maintenance fee is hereby accepted and the above-identified patent is reinstated as of the mail date of this decision.

Telephone inquiries concerning this decision should be directed to Tredelle Jackson at (571) 272-2783.

Ramesh Krishnamurthy
Petitions Examiner
Office of Petitions

UNITED STATES PATENT AND TRADEMARK OFFICE

Commissioner for Patents
United States Patent and Trademark Office
P.O. Box 1450
Alexandria, VA 22313-1450
www.uspto.gov

ERICSSON INC.
6300 LEGACY DRIVE
M/S EVR 1-C-11
PLANO TX 75024

In re Application of
BHATIA, RANJIT et al. :
Application No.: 09/475,324 :
Filing or 371(c) Date: December 30, 1999 :
Attorney Docket Number: 27943-00385 :

DEC 15 2010

DECISION ON
PETITION

This is a decision on the Petition To Withdraw Holding Of Abandonment, received in the United States Patent & Trademark (USPTO) on March 12, 2007.

The petition is **DISMISSED**.

Any request for reconsideration of this decision, or as explained below, filing a petition seeking revival under 37 CFR § 1.137, must be filed within TWO (2) MONTHS from the mail date of this decision.

The above-identified application was held abandoned for applicant's failure to timely pay the issue fee, as required in the Notice of Allowance and Fee(s) Due mailed June 30, 2003. The Notice of Abandonment was mailed December 29, 2003.

The Office acknowledges receipt of Part B – Fee(s) Transmittal on September 4, 2203, as evidenced by the "Office Date" stamp thereon. However, without the inclusion of the Deposit Account Number on the form there was no authorization to charge the required fees.

As an additional aid to applicants, the rule as proposed has been amended to include §§ 1.311(b)(1) and (b)(2) that can act as safety mechanisms. Where it is clear that an applicant actually intends to pay the issue fee and publication fee (if required) such as by submitting an incorrect issue fee or publication fee, or a fee transmittal form (or letter) for payment of the fees, a request to charge the correct issue fee or any publication fee due to any deposit account identified in a previously filed authorization to charge **such** fees, will be allowed to act a payment of the correct issue fee.

Petitioner should review the amended rules pertaining to general authorization to pay fees. See 65 FR 54647 September 8, 2000, revised 69 FR 56481 September 21, 2004, effective September 21, 2004. Unfortunately, the application file does not reveal a previously filed authorization to charge **such** fee(s) or specifically the issue fee.

In light of the non-compliance with 37CFR 1.25, the holding of abandonment cannot be withdrawn.

Applicant may seek relief by filing a petition for Revival of Abandoned Application under CFR § 1.137 (a) or (b). (Forms are available at USPTO website http://www.uspto.gov)

Under 37 CFR 1.137(a), a petition for the revival of an ***unavoidable*** abandoned application
Under 37 CFR 1.137(b), a petition for the revival of an ***unintentionally*** abandoned application

Further inquires with respect to filing a petition under 37 CFR § 1.137 may be directed to the Office of Petitions at 571-272-3282 or addressed as follows:

By mail:	Mail Stop Petitions Commissioner for Patents Office of Petitions P O Box 1450 Alexandria, VA 22313-1450
By FAX:	(571) 273-8300 Attn: Office of Petitions
By hand:	Customer Service Window Randolph Building 401 Dulany Street Alexandria, VA 22314

Telephone inquiries concerning this matter should be directed to the undersigned at (703) 756-1547.

Kay D. Pinkney
Application Assistance Unit
Office of Data Management

UNITED STATES PATENT AND TRADEMARK OFFICE

COMMISSIONER FOR PATENTS
UNITED STATES PATENT AND TRADEMARK OFFICE
P.O. BOX 1450

MAILED

FEB 11 2011

OFFICE OF PETITIONS

Ericsson Inc.
6300 Legacy Drive
M/S EVR 1-C-11
Plano, Texas 75024

In re Application of	:	
Ranjit BHATIA et al.	:	DECISION GRANTING PETITION
Application No. 09/475,324	:	UNDER 37 CFR 1.137(b)
Filed: 30 December 1999	:	
Atty. Docket No.: P11761-US1	:	

This is a decision on the petition under 37 CFR 1.137(b), filed 4 January 2011, to revive the above-identified application ("Application").

The petition is **GRANTED**.

The Application became abandoned for failure to reply in a timely manner to the Notice of Allowance and Fee(s) Due mailed 30 June 2003 ("Notice"), which set a shortened statutory reply period of three (3) months. No extension of time under the provisions of 37 CFR 1.136(a) was obtained. The application thus became abandoned on 1 October 2003, with notification mailed 29 December 2003.

A grantable petition under 37 CFR 1.137(b) must be accompanied by: (1) the reply, unless previously filed; (2) the petition fee as set forth in 37 CFR 1.17(m); (3) a Statement that the entire delay in filing the required reply from the due date for the reply until the filing of a grantable petition pursuant to 37 CFR 1.137(b) was unintentional; and (4) any terminal disclaimer (and fee as set forth in 37 CFR 1.20(d)) required by 37 CFR 1.137(d).

The petition satisfies the conditions for revival pursuant to 37 CFR 1.137(b) by including (1) a reply in the form of payment of the Issue and Publication Fees, (2) a petition fee of $1620.00, and (3) a Statement of unintentional delay. The reply to the Notice is accepted as having been unintentionally delayed.

There is no indication that the person signing the instant Petition was given a power of attorney or authorization of agent to prosecute the Application. Further, it is not apparent whether the signer of the Petition was in a position to have firsthand knowledge of the facts and circumstances of the delay at issue. Nevertheless, such statement is being treated as having been made as the result of a reasonable inquiry into the facts and

circumstances of the delay. *See,* 37 CFR 10.18(b) and Changes to Patent Practice and Procedure; Final Rule Notice, 62 Fed. Reg. 53131, 53178 (10 October 1997), 1203 Off. Gaz. Pat. Office 63, 103 (21 October 1997). In the event that such an inquiry has not been made, Petitioner must make such an inquiry. If such inquiry results in the discovery that it is not correct that the entire delay in filing the required reply from the due date for the reply until the filing of a grantable petition pursuant to 37 CFR 1.137(b) was unintentional, Petitioner must notify the Office.

General inquiries relating to this decision should be directed to Robert DeWitty, Petitions Examiner, Office of Petitions (571-272-6051).

The application file will be referred to Office of Data Management.

David Bucci
Petitions Examiner
Office of Petitions

PTO/SB/66 (03-09)
Approved for use through 03/31/2012. OMB 0651-0016
U.S. Patent and Trademark Office: U.S. DEPARTMENT OF COMMERCE
Under the Paperwork Reduction Act of 1995, no persons are required to respond to a collection of information unless it displays valid OMB control number.

PETITION TO ACCEPT UNINTENTIONALLY DELAYED PAYMENT OF MAINTENANCE FEE IN AN EXPIRED PATENT (37 CFR 1.378(c))

Patent Number	Issue Date (YYYY-MM-DD)	Application Number	Filing Date (YYYY-MM-DD)	Docket Number (if applicable)
7252806	2007-08-07	09475499	1999-12-30	

CAUTION: Maintenance fee (and surcharge, if any) payment must correctly identify: (1) the patent number and (2) the application number of the actual U.S. application leading to issuance of that patent to ensure the fee(s) is/are associated with the correct patent. 37 CFR 1.366(c) and (d).

SMALL ENTITY

☒ Patentee claims, or has previously claimed, small entity status. See 37 CFR 1.27.

LOSS OF ENTITLEMENT TO SMALL ENTITY STATUS

☐ Patentee is no longer entitled to small entity status. See 37 CFR 1.27(g)

NOT Small Entity			Small Entity		
	Fee	Code		Fee	Code
○	3 ½ year	(1551)	◉	3 ½ year	(2551)
○	7 ½ year	(1552)	○	7 ½ year	(2552)
○	11 ½ year	(1553)	○	11 ½ year	(2553)

SURCHARGE

The surcharge required by 37 CFR 1.20(i)(2) (Fee Code 1558) must be paid as a condition of accepting unintentionally delayed payment of the maintenance fee.

MAINTENANCE FEE (37 CFR 1.20(e)-(g))

The appropriate maintenance fee must be submitted with this petition.

STATEMENT

THE UNDERSIGNED CERTIFIES THAT THE DELAY IN PAYMENT OF THE MAINTENANCE FEE TO THIS PATENT WAS UNINTENTIONAL

PETITIONER(S) REQUEST THAT THE DELAYED PAYMENT OF THE MAINTENANCE FEE BE ACCEPTED AND THE PATENT REINSTATED

THIS PORTION MUST BE COMPLETED BY THE SIGNATORY OR SIGNATORIES

37 CFR 1.378(d) states: "Any petition under this section must be signed by an attorney or agent registered to practice before the Patent and Trademark Office, or by the patentee, the assignee, or other party in interest."

I certify, in accordance with 37 CFR 1.4(d)(4) that I am

◉ An attorney or agent registered to practice before the Patent and Trademark Office

○ A sole patentee

○ A joint patentee; I certify that I am authorized to sign this submission on behalf of all the other patentees.

○ A joint patentee; all of whom are signing this e-petition

○ The assignee of record of the entire interest

PTO/SB/66 (03-09)
Approved for use through 03/31/2012. OMB 0651-0016
U.S. Patent and Trademark Office: U.S. DEPARTMENT OF COMMERCE
Under the Paperwork Reduction Act of 1995, no persons are required to respond to a collection of information unless it displays valid OMB control number.

Patent Practitioner			
A signature of the applicant or representative is required in accordance with 37 CFR 1.33 and 10.18. Please see 37 CFR 1.4(d) for the form of the signature			
Signature	/Laurence A. Greenberg/	Date (YYYY-MM-DD)	2011-08-12
Name	Laurence A. Greenberg	Registration Number	29308

This collection of information is required by 37 CFR 1.378(c). The information is required to obtain or retain a benefit by the public which is to file (and by the USPTO to process) an application. Confidentiality is governed by 35 U.S.C. 122 and 37 CFR 1.11 and 1.14. This collection is estimated to take 1 hour to complete, including gathering, preparing, and submitting the completed application form to the USPTO. Time will vary depending upon the individual case. Any comments on the amount of time you require to complete this form and/ or suggestions for reducing this burden, should be sent to the Chief Information Officer, U.S. Patent and Trademark Office, U.S. Department of Commerce, P.O. Box 1450, Alexandria, VA 22313-1450. DO NOT SEND FEES OR COMPLETED FORMS TO THIS ADDRESS. **This form can only be used when in conjunction with EFS-Web. If this form is mailed to the USPTO, it may cause delays in reinstating the patent.**

Privacy Act Statement

The Privacy Act of 1974 (P.L. 93-579) requires that you be given certain information in connection with your submission of the attached form related to a patent application or patent. Accordingly, pursuant to the requirements of the Act, please be advised that: (1) the general authority for the collection of this information is 35 U.S.C. 2(b)(2); (2) furnishing of the information solicited is voluntary; and (3) the principal purpose for which the information is used by the U.S. Patent and Trademark Office is to process and/or examine your submission related to a patent application or patent. If you do not furnish the requested information, the U.S. Patent and Trademark Office may not be able to process and/or examine your submission, which may result in termination of proceedings or abandonment of the application or expiration of the patent.

The information provided by you in this form will be subject to the following routine uses:

1. The information on this form will be treated confidentially to the extent allowed under the Freedom of Information Act (5 U.S.C. 552) and the Privacy Act (5 U.S.C. 552a). Records from this system of records may be disclosed to the Department of Justice to determine whether the Freedom of Information Act requires disclosure of these records.

2. A record from this system of records may be disclosed, as a routine use, in the course of presenting evidence to a court, magistrate, or administrative tribunal, including disclosures to opposing counsel in the course of settlement negotiations.

3. A record in this system of records may be disclosed, as a routine use, to a Member of Congress submitting a request involving an individual, to whom the record pertains, when the individual has requested assistance from the Member with respect to the subject matter of the record.

4. A record in this system of records may be disclosed, as a routine use, to a contractor of the Agency having need for the information in order to perform a contract. Recipients of information shall be required to comply with the requirements of the Privacy Act of 1974, as amended, pursuant to 5 U.S.C. 552a(m).

5. A record related to an International Application filed under the Patent Cooperation Treaty in this system of records may be disclosed, as a routine use, to the International Bureau of the World Intellectual Property Organization, pursuant to the Patent Cooperation Treaty.

6. A record in this system of records may be disclosed, as a routine use, to another federal agency for purposes of National Security review (35 U.S.C. 181) and for review pursuant to the Atomic Energy Act (42 U.S.C. 218(c)).

7. A record from this system of records may be disclosed, as a routine use, to the Administrator, General Services, or his/her designee, during an inspection of records conducted by GSA as part of that agency's responsibility to recommend improvements in records management practices and programs, under authority of 44 U.S.C. 2904 and 2906. Such disclosure shall be made in accordance with the GSA regulations governing inspection of records for this purpose, and any other relevant (i.e., GSA or Commerce) directive. Such disclosure shall not be used to make determinations about individuals.

8. A record from this system of records may be disclosed, as a routine use, to the public after either publication of the application pursuant to 35 U.S.C. 122(b) or issuance of a patent pursuant to 35 U.S.C. 151. Further, a record may be disclosed, subject to the limitations of 37 CFR 1.14, as a routine use, to the public if the record was filed in an application which became abandoned or in which the proceedings were terminated and which application is referenced by either a published application, an application open to public inspections or an issued patent.

9. A record from this system of records may be disclosed, as a routine use, to a Federal, State, or local law enforcement agency, if the USPTO becomes aware of a violation or potential violation of law or regulation.

UNITED STATES PATENT AND TRADEMARK OFFICE

Commissioner for Patents
United States Patent and Trademark Office
P.O. Box 1450
Alexandria, VA 22313-1450
www.uspto.gov

In re Patent No. 7252806
Issue Date: August 7,2007
Application No. 09475499
Filed: December 30,1999
Attorney Docket No.

:
:DECISION GRANTING PETITION
:UNDER 37 CFR 1.378(c)
:

This is a decision on the electronic petition, filed August 12,2011 ,under 37 CFR 1.378(c) to accept the unintentionally delayed payment of the 3.5 year maintenance fee for the above-identified patent.

The petition is **GRANTED**.

The maintenance fee is accepted, and the above-identified patent reinstated as of August 12,2011 .
This decision also constitutes notice that the fee has been accepted. An electronic copy of the petition and this decision has been created as an entry in the Image File Wrapper. Nevertheless, petitioner should print and retain an independent copy.

Telephone inquiries related to this electronic decision should be directed to the Electronic Business Center at 1-866-217-9197.

UNITED STATES PATENT AND TRADEMARK OFFICE

Commissioner for Patents
United States Patent and Trademark Office
P.O. Box 1450
Alexandria, VA 22313-1450
www.uspto.gov

THERMO FINNIGAN LLC
355 RIVER OAKS PARKWAY
SAN JOSE, CA 95134

MAILED

MAY 13 2011

OFFICE OF PETITIONS

In re Patent No. **6,149,816** :
Issue Date: November 21, 2000 :
Application No. 09/476,257 : NOTICE UNDER 37 CFR 1.28(C)
Filed: January 3, 2000 :
Attorney Docket No. **3206US2/NAT** :

This is a notice regarding your request for acceptance of a fee deficiency submission under 37 CFR 1.28. On September 1, 1998, the Court of Appeals for the Federal Circuit held that 37 CFR 1.28(c) is the sole provision governing the time for correction of the erroneous payment of the issue fee as a small entity. **See DH Technology v. Synergystex International, Inc. 154 F.3d 1333, 47 USPQ2d 1865 (Fed. Cir. Sept. 1, 1998).**

The Office no longer investigates or rejects original or reissue applications under 37 CFR 1.56. **1098 Off. Gaz. Pat. Office 502 (January 3, 1989)**. Therefore, nothing in this Notice is intended to imply that an investigation was done.

Your fee deficiency submission under 37 CFR 1.28 is hereby **ACCEPTED**.

This application is no longer entitled to small entity status. Accordingly, all future fees paid in this application must be paid at the large entity rate.

Inquiries related to this communication should be directed to Monica A. Graves at (571) 272-7253.

/Monica A. Graves/
Petitions Examiner, Office of Petitions

UNITED STATES PATENT AND TRADEMARK OFFICE

Commissioner for Patents
United States Patent and Trademark Office
P.O. Box 1450
Alexandria, VA 22313-1450
www.uspto.gov

ANDRUS SCEALES STARKE & SAWALL LLP
100 EAST WISCONSIN AVE
SUITE 1100
MILWAUKEE WI 53202

MAILED
JAN 12 2012
OFFICE OF PETITIONS

In re
Arnold Kastner
Application No. 09/476,345
Filed: January 3, 2000
Patent No. 6,345,624
Issued: February 12, 2002

DECISION

This is a decision on the fee deficiency submission under 37 CFR 1.28(c), filed December 8, 2011.

The fee deficiency submission under 37 CFR 1.28 of $680 for the 3.5 year maintenance fee, and $1,610 for the 7.5 year maintenance fee is hereby accepted.

The change of status to large entity has been entered.

Telephone inquiries concerning this matter may be directed to the undersigned at (571) 272-3207.

Cliff Congo
Petitions Attorney
Office of Petitions

PTO/SB/66 (03-09)
Approved for use through 03/31/2012. OMB 0651-0016
U.S. Patent and Trademark Office: U.S. DEPARTMENT OF COMMERCE
Under the Paperwork Reduction Act of 1995, no persons are required to respond to a collection of information unless it displays valid OMB control number.

PETITION TO ACCEPT UNINTENTIONALLY DELAYED PAYMENT OF MAINTENANCE FEE IN AN EXPIRED PATENT (37 CFR 1.378(c))

Patent Number	Issue Date (YYYY-MM-DD)	Application Number	Filing Date (YYYY-MM-DD)	Docket Number (if applicable)
6,371,637	2002-04-16	09/477,637	2000-01-03	RADZ2

CAUTION: Maintenance fee (and surcharge, if any) payment must correctly identify: (1) the patent number and (2) the application number of the actual U.S. application leading to issuance of that patent to ensure the fee(s) is/are associated with the correct patent. 37 CFR 1.366(c) and (d).

SMALL ENTITY

☒ Patentee claims, or has previously claimed, small entity status. See 37 CFR 1.27.

LOSS OF ENTITLEMENT TO SMALL ENTITY STATUS

☐ Patentee is no longer entitled to small entity status. See 37 CFR 1.27(g)

NOT Small Entity	Fee	Code	Small Entity	Fee	Code
○	3 ½ year	(1551)	○	3 ½ year	(2551)
○	7 ½ year	(1552)	◉	7 ½ year	(2552)
○	11 ½ year	(1553)	○	11 ½ year	(2553)

SURCHARGE

The surcharge required by 37 CFR 1.20(i)(2) (Fee Code 1558) must be paid as a condition of accepting unintentionally delayed payment of the maintenance fee.

MAINTENANCE FEE (37 CFR 1.20(e)-(g))

The appropriate maintenance fee must be submitted with this petition.

STATEMENT

THE UNDERSIGNED CERTIFIES THAT THE DELAY IN PAYMENT OF THE MAINTENANCE FEE TO THIS PATENT WAS UNINTENTIONAL

PETITIONER(S) REQUEST THAT THE DELAYED PAYMENT OF THE MAINTENANCE FEE BE ACCEPTED AND THE PATENT REINSTATED

THIS PORTION MUST BE COMPLETED BY THE SIGNATORY OR SIGNATORIES

37 CFR 1.378(d) states: "Any petition under this section must be signed by an attorney or agent registered to practice before the Patent and Trademark Office, or by the patentee, the assignee, or other party in interest."

I certify, in accordance with 37 CFR 1.4(d)(4) that I am

◉ An attorney or agent registered to practice before the Patent and Trademark Office

○ A sole patentee

○ A joint patentee; I certify that I am authorized to sign this submission on behalf of all the other patentees.

○ A joint patentee; all of whom are signing this e-petition

○ The assignee of record of the entire interest

PTO/SB/66 (03-09)
Approved for use through 03/31/2012. OMB 0651-0016
U.S. Patent and Trademark Office: U.S. DEPARTMENT OF COMMERCE
Under the Paperwork Reduction Act of 1995, no persons are required to respond to a collection of information unless it displays valid OMB control number.

Patent Practitioner			
A signature of the applicant or representative is required in accordance with 37 CFR 1.33 and 10.18. Please see 37 CFR 1.4(d) for the form of the signature			
Signature	/James E. Schutz, Reg. No. 48,658/	Date (YYYY-MM-DD)	2011-01-18
Name	James E. Schutz	Registration Number	48658

This collection of information is required by 37 CFR 1.378(c). The information is required to obtain or retain a benefit by the public which is to file (and by the USPTO to process) an application. Confidentiality is governed by 35 U.S.C. 122 and 37 CFR 1.11 and 1.14. This collection is estimated to take 1 hour to complete, including gathering, preparing, and submitting the completed application form to the USPTO. Time will vary depending upon the individual case. Any comments on the amount of time you require to complete this form and/ or suggestions for reducing this burden, should be sent to the Chief Information Officer, U.S. Patent and Trademark Office, U.S. Department of Commerce, P.O. Box 1450, Alexandria, VA 22313-1450. DO NOT SEND FEES OR COMPLETED FORMS TO THIS ADDRESS. **This form can only be used when in conjunction with EFS-Web. If this form is mailed to the USPTO, it may cause delays in reinstating the patent.**

Privacy Act Statement

The Privacy Act of 1974 (P.L. 93-579) requires that you be given certain information in connection with your submission of the attached form related to a patent application or patent. Accordingly, pursuant to the requirements of the Act, please be advised that: (1) the general authority for the collection of this information is 35 U.S.C. 2(b)(2); (2) furnishing of the information solicited is voluntary; and (3) the principal purpose for which the information is used by the U.S. Patent and Trademark Office is to process and/or examine your submission related to a patent application or patent. If you do not furnish the requested information, the U.S. Patent and Trademark Office may not be able to process and/or examine your submission, which may result in termination of proceedings or abandonment of the application or expiration of the patent.

The information provided by you in this form will be subject to the following routine uses:

1. The information on this form will be treated confidentially to the extent allowed under the Freedom of Information Act (5 U.S.C. 552) and the Privacy Act (5 U.S.C. 552a). Records from this system of records may be disclosed to the Department of Justice to determine whether the Freedom of Information Act requires disclosure of these records.

2. A record from this system of records may be disclosed, as a routine use, in the course of presenting evidence to a court, magistrate, or administrative tribunal, including disclosures to opposing counsel in the course of settlement negotiations.

3. A record in this system of records may be disclosed, as a routine use, to a Member of Congress submitting a request involving an individual, to whom the record pertains, when the individual has requested assistance from the Member with respect to the subject matter of the record.

4. A record in this system of records may be disclosed, as a routine use, to a contractor of the Agency having need for the information in order to perform a contract. Recipients of information shall be required to comply with the requirements of the Privacy Act of 1974, as amended, pursuant to 5 U.S.C. 552a(m).

5. A record related to an International Application filed under the Patent Cooperation Treaty in this system of records may be disclosed, as a routine use, to the International Bureau of the World Intellectual Property Organization, pursuant to the Patent Cooperation Treaty.

6. A record in this system of records may be disclosed, as a routine use, to another federal agency for purposes of National Security review (35 U.S.C. 181) and for review pursuant to the Atomic Energy Act (42 U.S.C. 218(c)).

7. A record from this system of records may be disclosed, as a routine use, to the Administrator, General Services, or his/her designee, during an inspection of records conducted by GSA as part of that agency's responsibility to recommend improvements in records management practices and programs, under authority of 44 U.S.C. 2904 and 2906. Such disclosure shall be made in accordance with the GSA regulations governing inspection of records for this purpose, and any other relevant (i.e., GSA or Commerce) directive. Such disclosure shall not be used to make determinations about individuals.

8. A record from this system of records may be disclosed, as a routine use, to the public after either publication of the application pursuant to 35 U.S.C. 122(b) or issuance of a patent pursuant to 35 U.S.C. 151. Further, a record may be disclosed, subject to the limitations of 37 CFR 1.14, as a routine use, to the public if the record was filed in an application which became abandoned or in which the proceedings were terminated and which application is referenced by either a published application, an application open to public inspections or an issued patent.

9. A record from this system of records may be disclosed, as a routine use, to a Federal, State, or local law enforcement agency, if the USPTO becomes aware of a violation or potential violation of law or regulation.

UNITED STATES PATENT AND TRADEMARK OFFICE

Commissioner for Patents
United States Patent and Trademark Office
P.O. Box 1450
Alexandria, VA 22313-1450
www.uspto.gov

In re Patent No. 6371637
Issue Date: April 16,2002
Application No. 09477637
Filed: January 3,2000
Attorney Docket No. 36457/JWE/R439

:
:DECISION GRANTING PETITION
:UNDER 37 CFR 1.378(c)
:

This is a decision on the electronic petition, filed January 18,2011 ,under 37 CFR 1.378(c) to accept the unintentionally delayed payment of the 7.5 year maintenance fee for the above-identified patent.

The petition is **GRANTED**.

The maintenance fee is accepted, and the above-identified patent reinstated as of January 18,2011 . This decision also constitutes notice that the fee has been accepted. An electronic copy of the petition and this decision has been created as an entry in the Image File Wrapper. Nevertheless, petitioner should print and retain an independent copy.

Telephone inquiries related to this electronic decision should be directed to the Electronic Business Center at 1-866-217-9197.

UNITED STATES PATENT AND TRADEMARK OFFICE

Commissioner for Patents
United States Patent and Trademark Office
P.O. Box 1450
Alexandria, VA 22313-1450
www.uspto.gov

HODES, PESSIN & KATZ, P.A.
901 DULANEY VALLEY ROAD, SUITE 400
BALTIMORE MD 21204

MAILED
FEB 10 2012
OFFICE OF PETITIONS

In re Patent No. 6,395,721 :
Issue Date: May 28, 2002 :
Application No. 09/477,838 : ON PETITION
Filed: January 5, 2000 :
Attorney Docket No. 99381-PA :

This is a decision on the petition under 37 CFR 1.378(c), filed November 25, 2011, to accept the delayed payment of a maintenance fee for the above-identified patent.

The petition is **DISMISSED** as Moot.

The petition is dismissed as moot because the Office finance records for the above –identified patent show that the 7 ½ year maintenance fee was paid on November 20, 2009. The window for the 11 ½ year maintenance fee payment opens on May 28, 2013. Therefore, no maintenance fees are due at this time.

If the above is deemed incorrect, applicant must notify the Office in writing of such.

In view of the above, the $3,065.00 fee submitted on November 17, 2011, is being refunded by check as it is the method in which the fee was paid.

There is no indication that the person signing the petition was ever given a power of attorney to prosecute the application. If the person signing the petition desires to receive future correspondence regarding this application, the appropriate power of attorney documents must be submitted. While a courtesy copy of this decision is being mailed to the person signing the petition, all future correspondence will be directed to the address currently of record until appropriate instructions are received.

Any questions concerning this matter may be directed to the undersigned at (571) 272-3208.

/KOC/
Karen Creasy
Petitions Examiner
Office of Petitions

Cc:

LEONARD BLOOM
44 CAVESWOOD LANE
OWINES MILLS, MD 21117

UNITED STATES PATENT AND TRADEMARK OFFICE

Commissioner for Patents
United States Patent and Trademark Office
P.O. Box 1450
Alexandria, VA 22313-1450
www.uspto.gov

CAPITOL PATENT & TRADEMARK LAW FIRM, PLLC
P.O. BOX 1995
VIENNA VA 22183

MAILED

FEB 22 2011

OFFICE OF PETITIONS
ON PETITION

In re Application of :
Donald Edgar Blahut et al. :
Application No. 00/477,880 :
Filed: January 5, 2000 :
Attorney Docket Number: **129250-002093/US** :

This is a decision on the petition filed September 24, 2010, under 37 CFR 1.181, to withdraw the holding of abandonment and in the alternative, under 37 CFR 1.137(b)[1], to revive the above identified application.

The petition under 37 CFR 1.181 is **DISMISSED**.
The petition under 37 CFR 1.137(b) is **GRANTED**.

The above-identified application became abandoned as a result of petitioner's failure to file a proper appeal brief within the time period provided. A Notice of Appeal was filed June 30, 2006. On August 30, 2006 an appeal brief was filed. On September 15, 2006, however, a Notification of Non-Compliant Appeal Brief (37 CFR 41.37) was mailed. A replacement appeal brief was filed October 16, 2006 and a Notification of Non-Compliant Appeal Brief (37 CFR 41.37) was again mailed on January 3, 2007. A second replacement appeal brief was filed February 5, 2007 and a Notification of Non-Compliant Appeal Brief (37 CFR 41.37) was again mailed on August 1, 2007. After the filing of yet another replacement appeal brief on September 4, 2007, a Notice of Abandonment and Communication Re: Appeal was mailed October 9, 2007 advising that the Appeal is Dismissed because " The brief does not contain a concise explanation of the subject matter defined in each independent claim involved in the

---

[1]Effective December 1, 1997, the provisions of 37 CFR 1.137(b) now provide that where the delay in reply was unintentional, a petition may be filed to revive an abandoned application or a lapsed patent pursuant to 37 CFR 1.137(b). A grantable petition filed under the provisions of 37 CFR 1.137(b) must be accompanied by:

(1) the required reply, unless previously filed. In a nonprovisional application abandoned for failure to prosecute, the required reply may be met by the filing of a continuing application. In a nonprovisional application filed on or after June 8, 1995, and abandoned for failure to prosecute, the required reply may also be met by the filing of a request for continued examination in compliance with § 1.114. In an application or patent, abandoned or lapsed for failure to pay the issue fee or any portion thereof, the required reply must be the payment of the issue fee or any outstanding balance thereof. In an application abandoned for failure to pay the publication fee, the required reply must include payment of the publication fee.

(2) the petition fee as set forth in 37 CFR 1.17(m);

(3) a statement that the entire delay in filing the required reply from the due date for the reply until the filing of a grantable petition pursuant to 37 CFR 1.137(b) was unintentional. The Director may require additional information where there is a question whether the delay was unintentional; and

(4) any terminal disclaimer (and fee as set forth in 37 CFR 1.20(d)) required pursuant to 37 CFR 1.137(c)).

appeal, referring to the specification by page and line number for each element in the claims." Thus, "Because of the dismissal of the appeal, this application is abandoned because there are no allowed claims."

Petitioner argues that the statements indicated in the Communication mailed October 9, 2007 are incorrect, that "the process used in reviewing appellate briefs during 2007 was inconsistent, arbitrary, and confusing" and that "Believing that the Patent Appeal Center had made a clerical error, and had not received or reviewed the correct set of claims, the Applicants' Attorney began to prepare a petition to withdraw the Notice of Abandonment."

Petitioner's arguments have been considered but are not thought to be persuasive. The Notice of Defective Appeal Brief mailed August 1, 2007 set a one-month period for reply that was extendable under 37 CFR 1.136. Applicant had until September 4, 2007 in which to file the corrected brief. Applicant filed what they thought was a "corrected" appeal brief on September 4, 2007. The examiner of record however disagreed. Since the appeal was dismissed with no claims allowable, the case was properly abandoned. See also MPEP 1215.04. See also 37 CFR 41.37 (d) which states: (d) If a brief is filed which does not comply with all the requirements of paragraph (c) of this section, appellant will be notified of the reasons for non-compliance and given a time period within which to file an amended brief. If appellant does not file an amended brief within the set time period, or files an amended brief which does not overcome all the reasons for non-compliance stated in the notification, the appeal will stand dismissed.

Petitioner has submitted a Request for Continued Examination (RCE) and an amendment as the submission required under 37 CFR 1.114.

With respect to the petition to revive, the petition fee in the amount of $1620.00 has been charged to deposit account no. 50-3777.

All other requirements under 37 CFR 1.137(b) having been met, this matter is being referred to Technology Center 2154 for processing of the RCE.

Telephone inquiries related to this decision should be directed to the undersigned Petitions Attorney at (571) 272-3212.

Patricia Faison-Ball
Senior Petitions Attorney
Office of Petitions

UNITED STATES PATENT AND TRADEMARK OFFICE

Commissioner for Patents
United States Patent and Trademark Office
P.O. Box 1450
Alexandria, VA 22313-1450
www.uspto.gov

#13

PHILIP O. POST
INDEL, INC.
PO BOX 157
RANCOCAS NJ 08073

MAILED

AUG 24 2010

OFFICE OF PETITIONS

In re Application of	:	
Eugene M. Pester, III	:	
Application No. 09/478,078	:	DECISION ON PETITION
Filed: January 5, 2000	:	
Attorney Docket No. 023341.9002	:	

This is a decision on the petition under 37 CFR 1.181, filed January 26, 2004, requesting withdrawal of the holding of abandonment in the above-identified application.

This application was held abandoned for failure to timely submit Corrected Drawings on or before October 24, 2003, as required by the Notice of Allowability mailed July 24, 2003. A Notice of Abandonment was mailed December 15, 2003.

Petitioner states that the reply was timely. A review of USPTO records reveals that petitioner's reply was received on October 23, 2003 and was indeed timely.

In view of the above, the Notice of Abandonment is hereby vacated and the holding of abandonment withdrawn and the application restored to pending status.

Telephone inquiries concerning this decision should be directed to Joan Olszewski at (571) 272-7751.

This application is being referred to the Office of Data Management for processing into a patent and review of the Corrected Drawings submitted on October 23, 2003.

/Liana Walsh/
Liana Walsh
Petitions Examiner
Office of Petitions

PTO/SB/66 (03-09)
Approved for use through 03/31/2012. OMB 0651-0016
U.S. Patent and Trademark Office: U.S. DEPARTMENT OF COMMERCE
Under the Paperwork Reduction Act of 1995, no persons are required to respond to a collection of information unless it displays valid OMB control number.

PETITION TO ACCEPT UNINTENTIONALLY DELAYED PAYMENT OF MAINTENANCE FEE IN AN EXPIRED PATENT (37 CFR 1.378(c))

Patent Number	Issue Date (YYYY-MM-DD)	Application Number	Filing Date (YYYY-MM-DD)	Docket Number (if applicable)
6426064	2002-07-30	09/478,273	2000-01-05	2098-2

CAUTION: Maintenance fee (and surcharge, if any) payment must correctly identify: (1) the patent number and (2) the application number of the actual U.S. application leading to issuance of that patent to ensure the fee(s) is/are associated with the correct patent. 37 CFR 1.366(c) and (d).

SMALL ENTITY

☒ Patentee claims, or has previously claimed, small entity status. See 37 CFR 1.27.

LOSS OF ENTITLEMENT TO SMALL ENTITY STATUS

☐ Patentee is no longer entitled to small entity status. See 37 CFR 1.27(g)

NOT Small Entity			Small Entity		
	Fee	Code		Fee	Code
○	3 ½ year	(1551)	○	3 ½ year	(2551)
○	7 ½ year	(1552)	◉	7 ½ year	(2552)
○	11 ½ year	(1553)	○	11 ½ year	(2553)

SURCHARGE

The surcharge required by 37 CFR 1.20(i)(2) (Fee Code 1558) must be paid as a condition of accepting unintentionally delayed payment of the maintenance fee.

MAINTENANCE FEE (37 CFR 1.20(e)-(g))

The appropriate maintenance fee must be submitted with this petition.

STATEMENT

THE UNDERSIGNED CERTIFIES THAT THE DELAY IN PAYMENT OF THE MAINTENANCE FEE TO THIS PATENT WAS UNINTENTIONAL

PETITIONER(S) REQUEST THAT THE DELAYED PAYMENT OF THE MAINTENANCE FEE BE ACCEPTED AND THE PATENT REINSTATED

THIS PORTION MUST BE COMPLETED BY THE SIGNATORY OR SIGNATORIES

37 CFR 1.378(d) states: "Any petition under this section must be signed by an attorney or agent registered to practice before the Patent and Trademark Office, or by the patentee, the assignee, or other party in interest."

I certify, in accordance with 37 CFR 1.4(d)(4) that I am

◉ An attorney or agent registered to practice before the Patent and Trademark Office

○ A sole patentee

○ A joint patentee; I certify that I am authorized to sign this submission on behalf of all the other patentees.

○ A joint patentee; all of whom are signing this e-petition

○ The assignee of record of the entire interest

PTO/SB/66 (03-09)
Approved for use through 03/31/2012. OMB 0651-0016
U.S. Patent and Trademark Office: U.S. DEPARTMENT OF COMMERCE
Under the Paperwork Reduction Act of 1995, no persons are required to respond to a collection of information unless it displays valid OMB control number.

Patent Practitioner			
A signature of the applicant or representative is required in accordance with 37 CFR 1.33 and 10.18. Please see 37 CFR 1.4(d) for the form of the signature			
Signature	/Nichole E. Martiak, Reg. No. 55,832/	Date (YYYY-MM-DD)	2011-01-07
Name	Nichole E. Martiak	Registration Number	55832

This collection of information is required by 37 CFR 1.378(c). The information is required to obtain or retain a benefit by the public which is to file (and by the USPTO to process) an application. Confidentiality is governed by 35 U.S.C. 122 and 37 CFR 1.11 and 1.14. This collection is estimated to take 1 hour to complete, including gathering, preparing, and submitting the completed application form to the USPTO. Time will vary depending upon the individual case. Any comments on the amount of time you require to complete this form and/ or suggestions for reducing this burden, should be sent to the Chief Information Officer, U.S. Patent and Trademark Office, U.S. Department of Commerce, P.O. Box 1450, Alexandria, VA 22313-1450. DO NOT SEND FEES OR COMPLETED FORMS TO THIS ADDRESS. **This form can only be used when in conjunction with EFS-Web. If this form is mailed to the USPTO, it may cause delays in reinstating the patent.**

Privacy Act Statement

The Privacy Act of 1974 (P.L. 93-579) requires that you be given certain information in connection with your submission of the attached form related to a patent application or patent. Accordingly, pursuant to the requirements of the Act, please be advised that: (1) the general authority for the collection of this information is 35 U.S.C. 2(b)(2); (2) furnishing of the information solicited is voluntary; and (3) the principal purpose for which the information is used by the U.S. Patent and Trademark Office is to process and/or examine your submission related to a patent application or patent. If you do not furnish the requested information, the U.S. Patent and Trademark Office may not be able to process and/or examine your submission, which may result in termination of proceedings or abandonment of the application or expiration of the patent.

The information provided by you in this form will be subject to the following routine uses:

1. The information on this form will be treated confidentially to the extent allowed under the Freedom of Information Act (5 U.S.C. 552) and the Privacy Act (5 U.S.C. 552a). Records from this system of records may be disclosed to the Department of Justice to determine whether the Freedom of Information Act requires disclosure of these records.

2. A record from this system of records may be disclosed, as a routine use, in the course of presenting evidence to a court, magistrate, or administrative tribunal, including disclosures to opposing counsel in the course of settlement negotiations.

3. A record in this system of records may be disclosed, as a routine use, to a Member of Congress submitting a request involving an individual, to whom the record pertains, when the individual has requested assistance from the Member with respect to the subject matter of the record.

4. A record in this system of records may be disclosed, as a routine use, to a contractor of the Agency having need for the information in order to perform a contract. Recipients of information shall be required to comply with the requirements of the Privacy Act of 1974, as amended, pursuant to 5 U.S.C. 552a(m).

5. A record related to an International Application filed under the Patent Cooperation Treaty in this system of records may be disclosed, as a routine use, to the International Bureau of the World Intellectual Property Organization, pursuant to the Patent Cooperation Treaty.

6. A record in this system of records may be disclosed, as a routine use, to another federal agency for purposes of National Security review (35 U.S.C. 181) and for review pursuant to the Atomic Energy Act (42 U.S.C. 218(c)).

7. A record from this system of records may be disclosed, as a routine use, to the Administrator, General Services, or his/her designee, during an inspection of records conducted by GSA as part of that agency's responsibility to recommend improvements in records management practices and programs, under authority of 44 U.S.C. 2904 and 2906. Such disclosure shall be made in accordance with the GSA regulations governing inspection of records for this purpose, and any other relevant (i.e., GSA or Commerce) directive. Such disclosure shall not be used to make determinations about individuals.

8. A record from this system of records may be disclosed, as a routine use, to the public after either publication of the application pursuant to 35 U.S.C. 122(b) or issuance of a patent pursuant to 35 U.S.C. 151. Further, a record may be disclosed, subject to the limitations of 37 CFR 1.14, as a routine use, to the public if the record was filed in an application which became abandoned or in which the proceedings were terminated and which application is referenced by either a published application, an application open to public inspections or an issued patent.

9. A record from this system of records may be disclosed, as a routine use, to a Federal, State, or local law enforcement agency, if the USPTO becomes aware of a violation or potential violation of law or regulation.

UNITED STATES PATENT AND TRADEMARK OFFICE

Commissioner for Patents
United States Patent and Trademark Office
P.O. Box 1450
Alexandria, VA 22313-1450
www.uspto.gov

In re Patent No. 6426064
Issue Date: July 30,2002
Application No. 09478273
Filed: January 5,2000
Attorney Docket No.

:
:DECISION GRANTING PETITION
:UNDER 37 CFR 1.378(c)
:

This is a decision on the electronic petition, filed January 7,2011 ,under 37 CFR 1.378(c) to accept the unintentionally delayed payment of the 7.5 year maintenance fee for the above-identified patent.

The petition is **GRANTED**.

The maintenance fee is accepted, and the above-identified patent reinstated as of January 7,2011 .
This decision also constitutes notice that the fee has been accepted. An electronic copy of the petition and this decision has been created as an entry in the Image File Wrapper. Nevertheless, petitioner should print and retain an independent copy.

Telephone inquiries related to this electronic decision should be directed to the Electronic Business Center at 1-866-217-9197.

UNITED STATES PATENT AND TRADEMARK OFFICE

Commissioner for Patents
United States Patent and Trademark Office
P.O. Box 1450
Alexandria, VA 22313-1450
www.uspto.gov

BROWDY AND NEIMARK, PLLC
624 NINTH ST NW
STE 300
WASHINGTON, DC 20001-5303

MAILED

APR 28 2011

OFFICE OF PETITIONS

In re Patent No. 6,311,723 :
Issue Date: November 6, 2001 :
Application No. 09/478,435 : NOTICE
Filed: January 6, 2000 :
Patentee(s): David Shipp, et. al. :

This is a Notice regarding your "Submission under 37 C.F.R. § 1.28(c)" filed on March 24, 2011, requesting acceptance of a fee deficiency submission under 37 CFR 1.28(c).

The Office no longer investigates or rejects original or reissue applications under 37 CFR 1.56. 1098 Off. Gaz. Pat. Office 502 (January 3, 1989). Therefore, nothing in this Notice is intended to imply that an investigation was done.

Your fee deficiency submission under 37 CFR 1.28 is hereby **ACCEPTED**. Therefore, status as a small entity has been removed and any future fee(s) submitted must be paid at the large entity rate.

Additionally, the request is not signed by an attorney of record. However, in accordance with 37 CFR 1.34(a), the signature of Vishal V. Khatri appearing on the request shall constitute a representation to the United States Patent and Trademark Office that he is authorized to represent the particular party in whose behalf he acts. A courtesy copy of this Notice is being mailed to the address given in the present request. Thereafter, all future communications from the Office will be directed to the address of record unless otherwise instructed.

Inquiries related to this communication should be directed to the undersigned at (571) 272-3226.

Andrea Smith
Petitions Examiner
Office of Petitions

cc: Vishal V. Khatri
Intellectual Property Group
51 Louisiana Avenue, N.W.
Washington, DC 20001-2113

UNITED STATES PATENT AND TRADEMARK OFFICE

Commissioner for Patents
United States Patent and Trademark Office
P.O. Box 1450
Alexandria, VA 22313-1450
www.uspto.gov

ANDRUS SCEALES STARKE & SAWALL LLP
100 EAST WISCONSIN AVE
SUITE 1100
MILWAUKEE WI 53202

MAILED
JAN 12 2012
OFFICE OF PETITIONS

In re
Arnold Kastner
Application No. 09/478,895
Filed: January 7, 2000
Patent No. 6,125,854
Issued: October 3, 2000

DECISION

This is a decision on the fee deficiency submission under 37 CFR 1.28(c), filed December 8, 2011.

The fee deficiency submission under 37 CFR 1.28 of $660 for the 3.5 year maintenance fee, 1,670 for the 7.5 year maintenance fee, and $170 for the two late payment surcharges is hereby accepted.

The change of status to large entity has been entered.

Telephone inquiries concerning this matter may be directed to the undersigned at (571) 272-3207.

Cliff Congo
Petitions Attorney
Office of Petitions

PTO/SB/66 (03-09)
Approved for use through 03/31/2012. OMB 0651-0016
U.S. Patent and Trademark Office: U.S. DEPARTMENT OF COMMERCE
Under the Paperwork Reduction Act of 1995, no persons are required to respond to a collection of information unless it displays valid OMB control number.

PETITION TO ACCEPT UNINTENTIONALLY DELAYED PAYMENT OF MAINTENANCE FEE IN AN EXPIRED PATENT (37 CFR 1.378(c))

Patent Number	Issue Date (YYYY-MM-DD)	Application Number	Filing Date (YYYY-MM-DD)	Docket Number (if applicable)
6676582	2004-01-13	09479044	2000-01-07	100-P009US

CAUTION: Maintenance fee (and surcharge, if any) payment must correctly identify: (1) the patent number and (2) the application number of the actual U.S. application leading to issuance of that patent to ensure the fee(s) is/are associated with the correct patent. 37 CFR 1.366(c) and (d).

SMALL ENTITY

☐ Patentee claims, or has previously claimed, small entity status. See 37 CFR 1.27.

LOSS OF ENTITLEMENT TO SMALL ENTITY STATUS

☐ Patentee is no longer entitled to small entity status. See 37 CFR 1.27(g)

NOT Small Entity			Small Entity		
	Fee	Code		Fee	Code
○	3 ½ year	(1551)	○	3 ½ year	(2551)
◉	7 ½ year	(1552)	○	7 ½ year	(2552)
○	11 ½ year	(1553)	○	11 ½ year	(2553)

SURCHARGE

The surcharge required by 37 CFR 1.20(i)(2) (Fee Code 1558) must be paid as a condition of accepting unintentionally delayed payment of the maintenance fee.

MAINTENANCE FEE (37 CFR 1.20(e)-(g))

The appropriate maintenance fee must be submitted with this petition.

STATEMENT

THE UNDERSIGNED CERTIFIES THAT THE DELAY IN PAYMENT OF THE MAINTENANCE FEE TO THIS PATENT WAS UNINTENTIONAL

PETITIONER(S) REQUEST THAT THE DELAYED PAYMENT OF THE MAINTENANCE FEE BE ACCEPTED AND THE PATENT REINSTATED

THIS PORTION MUST BE COMPLETED BY THE SIGNATORY OR SIGNATORIES

37 CFR 1.378(d) states: "Any petition under this section must be signed by an attorney or agent registered to practice before the Patent and Trademark Office, or by the patentee, the assignee, or other party in interest."

I certify, in accordance with 37 CFR 1.4(d)(4) that I am

◉ An attorney or agent registered to practice before the Patent and Trademark Office

○ A sole patentee

○ A joint patentee; I certify that I am authorized to sign this submission on behalf of all the other patentees.

○ A joint patentee; all of whom are signing this e-petition

○ The assignee of record of the entire interest

PTO/SB/66 (03-09)
Approved for use through 03/31/2012. OMB 0651-0016
U.S. Patent and Trademark Office: U.S. DEPARTMENT OF COMMERCE
Under the Paperwork Reduction Act of 1995, no persons are required to respond to a collection of information unless it displays valid OMB control number.

Patent Practitioner			
A signature of the applicant or representative is required in accordance with 37 CFR 1.33 and 10.18. Please see 37 CFR 1.4(d) for the form of the signature			
Signature	/Jeffrey L. Wendt/	Date (YYYY-MM-DD)	2012-02-20
Name	Jeffrey L. Wendt	Registration Number	32952

This collection of information is required by 37 CFR 1.378(c). The information is required to obtain or retain a benefit by the public which is to file (and by the USPTO to process) an application. Confidentiality is governed by 35 U.S.C. 122 and 37 CFR 1.11 and 1.14. This collection is estimated to take 1 hour to complete, including gathering, preparing, and submitting the completed application form to the USPTO. Time will vary depending upon the individual case. Any comments on the amount of time you require to complete this form and/ or suggestions for reducing this burden, should be sent to the Chief Information Officer, U.S. Patent and Trademark Office, U.S. Department of Commerce, P.O. Box 1450, Alexandria, VA 22313-1450. DO NOT SEND FEES OR COMPLETED FORMS TO THIS ADDRESS. **This form can only be used when in conjunction with EFS-Web. If this form is mailed to the USPTO, it may cause delays in reinstating the patent.**

Privacy Act Statement

The Privacy Act of 1974 (P.L. 93-579) requires that you be given certain information in connection with your submission of the attached form related to a patent application or patent. Accordingly, pursuant to the requirements of the Act, please be advised that: (1) the general authority for the collection of this information is 35 U.S.C. 2(b)(2); (2) furnishing of the information solicited is voluntary; and (3) the principal purpose for which the information is used by the U.S. Patent and Trademark Office is to process and/or examine your submission related to a patent application or patent. If you do not furnish the requested information, the U.S. Patent and Trademark Office may not be able to process and/or examine your submission, which may result in termination of proceedings or abandonment of the application or expiration of the patent.

The information provided by you in this form will be subject to the following routine uses:

1. The information on this form will be treated confidentially to the extent allowed under the Freedom of Information Act (5 U.S.C. 552) and the Privacy Act (5 U.S.C. 552a). Records from this system of records may be disclosed to the Department of Justice to determine whether the Freedom of Information Act requires disclosure of these records.

2. A record from this system of records may be disclosed, as a routine use, in the course of presenting evidence to a court, magistrate, or administrative tribunal, including disclosures to opposing counsel in the course of settlement negotiations.

3. A record in this system of records may be disclosed, as a routine use, to a Member of Congress submitting a request involving an individual, to whom the record pertains, when the individual has requested assistance from the Member with respect to the subject matter of the record.

4. A record in this system of records may be disclosed, as a routine use, to a contractor of the Agency having need for the information in order to perform a contract. Recipients of information shall be required to comply with the requirements of the Privacy Act of 1974, as amended, pursuant to 5 U.S.C. 552a(m).

5. A record related to an International Application filed under the Patent Cooperation Treaty in this system of records may be disclosed, as a routine use, to the International Bureau of the World Intellectual Property Organization, pursuant to the Patent Cooperation Treaty.

6. A record in this system of records may be disclosed, as a routine use, to another federal agency for purposes of National Security review (35 U.S.C. 181) and for review pursuant to the Atomic Energy Act (42 U.S.C. 218(c)).

7. A record from this system of records may be disclosed, as a routine use, to the Administrator, General Services, or his/her designee, during an inspection of records conducted by GSA as part of that agency's responsibility to recommend improvements in records management practices and programs, under authority of 44 U.S.C. 2904 and 2906. Such disclosure shall be made in accordance with the GSA regulations governing inspection of records for this purpose, and any other relevant (i.e., GSA or Commerce) directive. Such disclosure shall not be used to make determinations about individuals.

8. A record from this system of records may be disclosed, as a routine use, to the public after either publication of the application pursuant to 35 U.S.C. 122(b) or issuance of a patent pursuant to 35 U.S.C. 151. Further, a record may be disclosed, subject to the limitations of 37 CFR 1.14, as a routine use, to the public if the record was filed in an application which became abandoned or in which the proceedings were terminated and which application is referenced by either a published application, an application open to public inspections or an issued patent.

9. A record from this system of records may be disclosed, as a routine use, to a Federal, State, or local law enforcement agency, if the USPTO becomes aware of a violation or potential violation of law or regulation.

UNITED STATES PATENT AND TRADEMARK OFFICE

Commissioner for Patents
United States Patent and Trademark Office
P.O. Box 1450
Alexandria, VA 22313-1450
www.uspto.gov

In re Patent No. 6676582
Issue Date: January 13,2004
Application No. 09479044
Filed: January 7,2000
Attorney Docket No. 2541-991655

:
:DECISION GRANTING PETITION
:UNDER 37 CFR 1.378(c)
:

This is a decision on the electronic petition, filed February 20,2012 ,under 37 CFR 1.378(c) to accept the unintentionally delayed payment of the 7.5 year maintenance fee for the above-identified patent.

The petition is **GRANTED**.

The maintenance fee is accepted, and the above-identified patent reinstated as of February 20,2012 . This decision also constitutes notice that the fee has been accepted. An electronic copy of the petition and this decision has been created as an entry in the Image File Wrapper. Nevertheless, petitioner should print and retain an independent copy.

Telephone inquiries related to this electronic decision should be directed to the Electronic Business Center at 1-866-217-9197.

UNITED STATES PATENT AND TRADEMARK OFFICE

Commissioner for Patents
United States Patent and Trademark Office
P.O. Box 1450
Alexandria, VA 22313-1450
www.uspto.gov

Paper No. 13

RANKIN, HILL & CLARK LLP
38210 GLENN AVENUE
WILLOUGHBY OH 44094-7808

MAILED

SEP 13 2010

OFFICE OF PETITIONS

In re Application of :
Krinsky :
Application No. 09/479,273 :
Patent No. 6,354,212 : DECISION ON PETITION
Filed: January 5, 2000 : PURSUANT TO 37 C.F.R.
Issue Date: March 12, 2002 : § 1.378(B)
Attorney Docket No. KRIN112403 :
Title: METHOD OF PREPARING :
CUSTOMIZED WALLPAPER PANELS :

This is a decision on the petition filed on June 1, 2010, pursuant to 37 C.F.R. § 1.378(b) to revive the above-identified application.

This petition pursuant to 37 C.F.R. § 1.378(b) is **DISMISSED**.

Background

The patent issued on March 12, 2002. The grace period for paying the 3½-year maintenance fee provided in 37 C.F.R. § 1.362(e) expired at midnight on March 12, 2006, with no payment received. Accordingly, the patent expired on March 12, 2006, at midnight.

Any petition to accept an unavoidably delayed payment of a maintenance fee filed under 37 C.F.R. § 1.378(b) must include:

(1) the required maintenance fee set forth in 37 C.F.R. § 1.20 (e) through (g);

(2) the surcharge set forth in 37 C.F.R. § 1.20(i)(1), and;

(3) a showing that the delay was unavoidable since reasonable care was taken to ensure that the maintenance fee would be paid timely and that the petition was filed promptly after the patentee was notified of, or otherwise became aware of, the expiration of the patent - the showing must enumerate the steps taken to ensure timely payment of the maintenance fee, the date and the manner in which patentee became aware of the expiration of the patent, and the steps taken to file the petition promptly.

With this petition, Petitioner has submitted the surcharge associated with a petition to accept the late payment of a maintenance fee as unavoidable, along with the 3½-year maintenance fee, and multiple statements of facts.

Petitioner has met the first and second requirements of Rule 1.378(b). The third requirement of Rule 1.378(b) will be discussed below.

The standard

35 U.S.C. § 41(c)(1) states, *in pertinent part*:

> The Director may accept the payment of any maintenance fee... after the six-month grace period if the delay[1] is shown to the satisfaction of the Director to have been unavoidable.

37 C.F.R. § 1.378(b)(3) is at issue in this case. Acceptance of a late maintenance fee under the unavoidable delay standard is considered under the same standard for reviving an abandoned application under 37 C.F.R. § 1.137(a). This is a very stringent standard. Decisions on reviving abandoned applications on the basis of "unavoidable" delay have adopted the reasonably prudent person standard in determining if the delay was unavoidable:

> The word 'unavoidable' ... is applicable to ordinary human affairs, and requires no more or greater care or diligence than is generally used and observed by prudent and careful men in relation to their most important business.[2]

---

1 This delay includes the entire period between the due date for the fee and the filing of a grantable petition pursuant to 37 C.F.R. § 1.378(b).
2 In re Mattullath, 38 App. D.C. 497, 514-15 (1912)(*quoting* Ex parte Pratt, 1887 Dec. Comm'r Pat. 31, 32-33 (1887)); see also Winkler v. Ladd, 221 F. Supp. 550, 552, 138 U.S.P.Q. 666, 167-68 (D.D.C. 1963), aff'd, 143 U.S.P.Q. 172 (D.C. Cir. 1963); Ex parte Henrich, 1913 Dec. Comm'r Pat. 139, 141 (1913).

In addition, decisions are made on a "case-by-case basis, taking all the facts and circumstances into account." Nonetheless, a petition cannot be granted where a petitioner has failed to meet his or her burden of establishing that the delay was "unavoidable."[3]

The burden of showing the cause of the delay is on the person seeking to revive the application.[4]

Application of the standard to the current facts and circumstances

Petitioner's explanation of the delay has been considered, and it has been determined that it fails to meet the standard for acceptance of a late payment of the maintenance fee and surcharge.

The period for paying the 3½-year maintenance fee without the surcharge extended from March 12, 2005 to September 12, 2005 and for paying with the surcharge from September 13, 2005 to March 12, 2006. Thus, the delay in paying the 3½-year maintenance fee extended from March 12, 2006 at midnight to the filing of this petition on June 1, 2010.

The relevant facts are as follows:

1. At all times prior to the expiration of this patent, this patent was owned by the inventor.

2. The inventor did not submit the maintenance fee to the Office, because she determined that "up to and during (the time when the first maintenance fee was due)…insufficient business reasons existed to justify payment of the maintenance fee…the market for customized wallpaper panels and thus, the importance for patents covering methods of providing such, did not provide sufficient cause for the expenditure of maintenance fees."[5]

3. Office records show that on April 1, 2009, the inventor assigned the patent to Howry LLP, and on April 20, 2009, Howry LLP assigned the patent to Petitioner, Avery Dennison Corporation.

---

3 Haines v. Quigg, 673 F. Supp. at 316-17, 5 U.S.P.Q.2d at 1131-32.
4 Id.
5 Krinsky declaration of facts, paragraph 8.

4. Petitioner became interested in acquiring this patent, and "in early 2009," Petitioner contacted the inventor to inquire whether she would be interested in assigning the patent to Petitioner.[6]

5. Prior to the aforementioned contact, Petitioner had actual knowledge that the 3½-year maintenance fee had not been submitted.[7]

6. Petitioner spent the time period between April 20, 2009 and February of 2010 obtaining the complete files associated with this patent, evaluating "the patent's relevance and potential value to any Avery business groups and/or current or proposed projects," and obtaining authorization from "the relevant business groups to undertake revival efforts" for this patent.[8]

7. On February 26, 2010, Petitioner contacted Mark Bandy, who prepared and submitted this petition on behalf of Petitioner.[9]

8. Petitioner "has a sophisticated in-house legal and patent department with corresponding docketing systems to ensure that all future maintenance fees associated with (this patent) will be paid..."[10]

First, the record does not contain a showing that the inventor had **steps** in place to ensure the timely submission of the maintenance fees. An adequate showing that the delay in payment of the maintenance fees at issue was "unavoidable" within the meaning of 35 U.S.C. 41(c) and 37 CFR 1.378(b)(3) requires a showing of the steps taken to ensure the timely payment of the maintenance fees for this patent. Where the record fails to disclose that the patentee took reasonable steps to ensure timely payment of the maintenance fees, 35 U.S.C. § 41(c) and 37 C.F.R. § 1.378(b)(3) preclude acceptance of the delayed payment of the maintenance fee under 37 CFR § 1.378(b).

Second, the record does not reveal the **date and the manner in which Petitioner became aware of the expiration of the patent.**

---

6 Sardesai statement of facts, paragraph 2 and 6.
7 Id. at 5.
8 Id. at 9.
9 Id at 10 and Bandy statement of facts, paragraph 1.
10 Showing of Unavoidable Delay in Support of Petitions Under 37 CFR § 1.378, page 4.

Third, the record does not support a finding that the entire period of delay was unavoidable.

For the period of time between the expiration of this patent and April 1, 2009, **this period of delay has been shown to have been clearly avoidable.** The inventor has clearly indicated that she **intentionally** permitted this patent to expire, as she did not feel that the subject matter of this patent had a level of commercially viability sufficient to justify the financial expense of maintaining this patent. In other words, the inventor has established that this patent was not her most important business.

A prudent and careful woman, acting in relation to her most important business, would not have determined that this patent was not worth the expense that was required to keep it active and enforceable, and consciously allowed it to expire.

As the owner of the patent intentionally allowed this patent to lapse, this portion of the period of delay is not unavoidable.

See MPEP § 711.03(c)(II)(C)(1)(D) for a similar discussion which pertains to unintentional delay in reviving an abandoned patent application.

For the period of time between when Petitioner first discovered that this patent had expired for failure to submit the maintenance fee (prior to "early 2009")[11] and the filing of this petition, this period of delay has not been shown to have been unavoidable.

As set forth above, Petitioner has a "sophisticated in-house legal and patent department with corresponding docketing systems." As such, it would appear that Petitioner was well aware of the need to submit maintenance fees, as well as the consequences of not seeking the prompt reinstatement of a patent that is known to have expired for failure to timely submit a maintenance fee. Yet rather than promptly seeking the reinstatement of this patent through the filing of a petition pursuant to 37 C.F.R. § 1.378(b), Petitioner spent the next ten months[12] gathering the relevant paperwork, evaluating the commercial viability of this patent, and obtaining authorization

---

11 Sardesai statement of facts, paragraphs 2, 5, and 6.
12 Petitioner first contacted the patent counsel who submitted this petition on behalf of Petitioner on February 26, 2010.

to submit the required fees to the Office, before eventually contacting Mr. Bandy and directing him to seek the reinstatement of this expired patent.

Prudent and careful men, acting in relation to their most important business, would have taken active measures to attempt to reinstate this patent immediately upon learning that it had expired, or at the very least, upon assuming ownership of the patent. Prudent and careful men, acting in relation to their most important business, would not assume ownership of the patent, and then wait ten months before attempting to secure the reinstatement of their most important business.

Conclusion

Any request for reconsideration of this decision must be filed within **TWO MONTHS** of the mailing date of this decision. Any such petition for reconsideration must be accompanied by the $400 petition fee set forth in 37 C.F.R. § 1.17(h). After decision on the petition for reconsideration, no further reconsideration or review of the matter will be undertaken by the Commissioner. Accordingly, on request for reconsideration, it is extremely important that Petitioner supply any and all relevant information and documentation in order to meet his burden of showing unavoidable delay. This includes statements by all persons with direct knowledge of the cause of the delay, setting forth the facts as they know them. Petitioner must provide documentation and address the deficiencies noted above. If on request for reconsideration, the delayed payment of the maintenance fees is not accepted, then the maintenance fees are subject to refund following the decision on the petition for reconsideration, or after the expiration of the time for filing such a petition for reconsideration, if none is filed.

The reply should include a cover letter entitled "Renewed Petition pursuant to 37 C.F.R. § 1.378(e)". This is not a final agency action within the meaning of 5 U.S.C § 704.

Any response to this decision should indicate in a prominent manner that the attorney handling this matter is Paul Shanoski, and may be submitted by mail,[13] hand-delivery,[14] or facsimile.[15]

---

13 Mail Stop Petition, Commissioner for Patents, United States Patent and Trademark Office, P.O. Box 1450, Alexandria, VA, 22313-1450.
14 Customer Window, Randolph Building, 401 Dulaney Street, Alexandria, VA, 22314.

Registered users of EFS-Web may alternatively submit a response to this decision via EFS-Web.[16]

The general phone number for the Office of Petitions which should be used for status requests is (571) 272-3282. Telephone inquiries regarding this decision should be directed to the undersigned at (571) 272-3225. Inquiries pertaining to the submission of maintenance fees should be directed to the Maintenance Fee branch at 571-272-6500.

/Paul Shanoski/
Paul Shanoski
Senior Attorney
Office of Petitions

15 (571) 273-8300 - please note this is a central facsimile number.
16 https://sportal.uspto.gov/authenticate/authenticateuserlocalepf.html

UNITED STATES PATENT AND TRADEMARK OFFICE

Commissioner for Patents
United States Patent and Trademark Office
P.O. Box 1450
Alexandria, VA 22313-1450
www.uspto.gov

KAARDAL & ASSOCIATES PC
IVAR M KAARDAL
3500 SOUTH FIRST AVE CIRCLE
SUITE 250
SIOUX FALLS SD 57105-5807

MAILED

DEC 16 2010

OFFICE OF PETITIONS

In re Application of	:	Paper No. 11
Derek Andersen	:	
Application No. 09/480,520	:	DECISION ON PETITION
Filed: Janury 07, 2000	:	
Attorney Docket No. **DLL627**	:	

This is a decision on the petition under the unintentional provisions of 37 CFR 1.137(b), filed August 30, 2010, to revive the above-identified application.

The petition is **GRANTED**.

This application became abandoned for failure to timely pay the issue and publication fees on or before April 29, 2002, as required by the Notice of Allowance and Fee(s) Due, mailed January 29, 2002. Accordingly, the date of abandonment of this application is April 30, 2002.

The petition satisfies the requirements of 37 CFR 1.137(b) in that petitioner has supplied (1) the reply in the form of payment of the issue fee of $755 and the publication fee of $300, (2) the petition fee of $810; and (3) a proper statement of unintentional delay. Accordingly, the Issue Fee is accepted as having been unintentionally delayed.

The application file does not indicate a change of address has been filed in this case, although the address given on the petition differs from the address of record. A change of address should be filed in this case in accordance with MPEP 601.03. A courtesy copy of this decision is being mailed to the address noted on the petition. However, until otherwise instructed, all future correspondence regarding this application will be mailed solely to the address of record.

Telephone inquiries concerning this decision should be directed to Tredelle D. Jackson at (571) 272-2783.

This application is being referred to the Office of Data Management for processing into a patent.

Ramesh Krishnamurthy
Petitions Examiner
Office of Petitions

cc: **DEREK ANDERSEN**
7801 N. LAMAR D-80
AUSTIN TX 78752

UNITED STATES PATENT AND TRADEMARK OFFICE

Commissioner for Patents
United States Patent and Trademark Office
P.O. Box 1450
Alexandria, VA 22313-1450
www.uspto.gov

In re Patent No. 6202604
Issue Date: March 20,2001
Application No. 09480582
Filed: January 10,2000
Attorney Docket No.

:
:DECISION GRANTING PETITION
:UNDER 37 CFR 1.378(c)
:

This is a decision on the electronic petition, filed February 25,2011 ,under 37 CFR 1.378(c) to accept the unintentionally delayed payment of the 7.5 year maintenance fee for the above-identified patent.

The petition is **GRANTED**.

The maintenance fee is accepted, and the above-identified patent reinstated as of February 25,2011 . This decision also constitutes notice that the fee has been accepted. An electronic copy of the petition and this decision has been created as an entry in the Image File Wrapper. Nevertheless, petitioner should print and retain an independent copy.

Telephone inquiries related to this electronic decision should be directed to the Electronic Business Center at 1-866-217-9197.

PTO/SB/66 (03-09)
Approved for use through 03/31/2012. OMB 0651-0016
U.S. Patent and Trademark Office: U.S. DEPARTMENT OF COMMERCE
Under the Paperwork Reduction Act of 1995, no persons are required to respond to a collection of information unless it displays valid OMB control number.

PETITION TO ACCEPT UNINTENTIONALLY DELAYED PAYMENT OF MAINTENANCE FEE IN AN EXPIRED PATENT (37 CFR 1.378(c))

Patent Number	Issue Date (YYYY-MM-DD)	Application Number	Filing Date (YYYY-MM-DD)	Docket Number (if applicable)
6202604	2001-03-20	09480582	2000-01-10	

CAUTION: Maintenance fee (and surcharge, if any) payment must correctly identify: (1) the patent number and (2) the application number of the actual U.S. application leading to issuance of that patent to ensure the fee(s) is/are associated with the correct patent. 37 CFR 1.366(c) and (d).

SMALL ENTITY

☒ Patentee claims, or has previously claimed, small entity status. See 37 CFR 1.27.

LOSS OF ENTITLEMENT TO SMALL ENTITY STATUS

☐ Patentee is no longer entitled to small entity status. See 37 CFR 1.27(g)

NOT Small Entity	Fee	Code	Small Entity	Fee	Code
◯	3 ½ year	(1551)	◯	3 ½ year	(2551)
◯	7 ½ year	(1552)	◉	7 ½ year	(2552)
◯	11 ½ year	(1553)	◯	11 ½ year	(2553)

SURCHARGE

The surcharge required by 37 CFR 1.20(i)(2) (Fee Code 1558) must be paid as a condition of accepting unintentionally delayed payment of the maintenance fee.

MAINTENANCE FEE (37 CFR 1.20(e)-(g))

The appropriate maintenance fee must be submitted with this petition.

STATEMENT

THE UNDERSIGNED CERTIFIES THAT THE DELAY IN PAYMENT OF THE MAINTENANCE FEE TO THIS PATENT WAS UNINTENTIONAL

PETITIONER(S) REQUEST THAT THE DELAYED PAYMENT OF THE MAINTENANCE FEE BE ACCEPTED AND THE PATENT REINSTATED

THIS PORTION MUST BE COMPLETED BY THE SIGNATORY OR SIGNATORIES

37 CFR 1.378(d) states: "Any petition under this section must be signed by an attorney or agent registered to practice before the Patent and Trademark Office, or by the patentee, the assignee, or other party in interest."

I certify, in accordance with 37 CFR 1.4(d)(4) that I am

◯ An attorney or agent registered to practice before the Patent and Trademark Office

◉ A sole patentee

◯ A joint patentee; I certify that I am authorized to sign this submission on behalf of all the other patentees.

◯ A joint patentee; all of whom are signing this e-petition

◯ The assignee of record of the entire interest

PTO/SB/66 (03-09)
Approved for use through 03/31/2012. OMB 0651-0016
U.S. Patent and Trademark Office: U.S. DEPARTMENT OF COMMERCE
Under the Paperwork Reduction Act of 1995, no persons are required to respond to a collection of information unless it displays valid OMB control number.

Sole Patentee			
A signature of the applicant or representative is required in accordance with 37 CFR 1.33 and 10.18. Please see 37 CFR 1.4(d) for the form of the signature.			
Signature	/Craig Silvers/	Date (YYYY-MM-DD)	2011-02-25
Name	Craig Silvers		

This collection of information is required by 37 CFR 1.378(c). The information is required to obtain or retain a benefit by the public which is to file (and by the USPTO to process) an application. Confidentiality is governed by 35 U.S.C. 122 and 37 CFR 1.11 and 1.14. This collection is estimated to take 1 hour to complete, including gathering, preparing, and submitting the completed application form to the USPTO. Time will vary depending upon the individual case. Any comments on the amount of time you require to complete this form and/ or suggestions for reducing this burden, should be sent to the Chief Information Officer, U.S. Patent and Trademark Office, U.S. Department of Commerce, P.O. Box 1450, Alexandria, VA 22313-1450. DO NOT SEND FEES OR COMPLETED FORMS TO THIS ADDRESS. **This form can only be used when in conjunction with EFS-Web. If this form is mailed to the USPTO, it may cause delays in reinstating the patent.**

Privacy Act Statement

The Privacy Act of 1974 (P.L. 93-579) requires that you be given certain information in connection with your submission of the attached form related to a patent application or patent. Accordingly, pursuant to the requirements of the Act, please be advised that: (1) the general authority for the collection of this information is 35 U.S.C. 2(b)(2); (2) furnishing of the information solicited is voluntary; and (3) the principal purpose for which the information is used by the U.S. Patent and Trademark Office is to process and/or examine your submission related to a patent application or patent. If you do not furnish the requested information, the U.S. Patent and Trademark Office may not be able to process and/or examine your submission, which may result in termination of proceedings or abandonment of the application or expiration of the patent.

The information provided by you in this form will be subject to the following routine uses:

1. The information on this form will be treated confidentially to the extent allowed under the Freedom of Information Act (5 U.S.C. 552) and the Privacy Act (5 U.S.C. 552a). Records from this system of records may be disclosed to the Department of Justice to determine whether the Freedom of Information Act requires disclosure of these records.

2. A record from this system of records may be disclosed, as a routine use, in the course of presenting evidence to a court, magistrate, or administrative tribunal, including disclosures to opposing counsel in the course of settlement negotiations.

3. A record in this system of records may be disclosed, as a routine use, to a Member of Congress submitting a request involving an individual, to whom the record pertains, when the individual has requested assistance from the Member with respect to the subject matter of the record.

4. A record in this system of records may be disclosed, as a routine use, to a contractor of the Agency having need for the information in order to perform a contract. Recipients of information shall be required to comply with the requirements of the Privacy Act of 1974, as amended, pursuant to 5 U.S.C. 552a(m).

5. A record related to an International Application filed under the Patent Cooperation Treaty in this system of records may be disclosed, as a routine use, to the International Bureau of the World Intellectual Property Organization, pursuant to the Patent Cooperation Treaty.

6. A record in this system of records may be disclosed, as a routine use, to another federal agency for purposes of National Security review (35 U.S.C. 181) and for review pursuant to the Atomic Energy Act (42 U.S.C. 218(c)).

7. A record from this system of records may be disclosed, as a routine use, to the Administrator, General Services, or his/her designee, during an inspection of records conducted by GSA as part of that agency's responsibility to recommend improvements in records management practices and programs, under authority of 44 U.S.C. 2904 and 2906. Such disclosure shall be made in accordance with the GSA regulations governing inspection of records for this purpose, and any other relevant (i.e., GSA or Commerce) directive. Such disclosure shall not be used to make determinations about individuals.

8. A record from this system of records may be disclosed, as a routine use, to the public after either publication of the application pursuant to 35 U.S.C. 122(b) or issuance of a patent pursuant to 35 U.S.C. 151. Further, a record may be disclosed, subject to the limitations of 37 CFR 1.14, as a routine use, to the public if the record was filed in an application which became abandoned or in which the proceedings were terminated and which application is referenced by either a published application, an application open to public inspections or an issued patent.

9. A record from this system of records may be disclosed, as a routine use, to a Federal, State, or local law enforcement agency, if the USPTO becomes aware of a violation or potential violation of law or regulation.

UNITED STATES PATENT AND TRADEMARK OFFICE

Commissioner for Patents
United States Patent and Trademark Office
P.O. Box 1450
Alexandria, VA 22313-1450
www.uspto.gov

TUROCY & WATSON, LLP
127 PUBLIC SQUARE
57TH FLOOR, KEY TOWER
CLEVELAND OH 44114

MAILED

MAR 08 2011

OFFICE OF PETITIONS

In re Patent No. 6,903,839 :
Issued: June 6, 2005 :
Application No. 09/480,645 : ON PETITION
Filed: January 10, 2000 :
Attorney Docket No: **004944.00025** :

This is a decision regarding the request for acceptance of a fee deficiency submission and loss of small entity status filed September 3, 2010 under 37 CFR 1.28.

On September 1, 1998, the Court of Appeals for the Federal Circuit held that 37 CFR 1.28(c) is the sole provision governing the time for correction of the erroneous payment of the issue fee as a small entity. See DH Technology v. Synergystex International, Inc.. 154 F.33d 1333, 47 USPQ2d 1865 (Fed. Cir. Sept. 1, 1998).

The Office no longer investigates or rejects original or reissue applications under 37 CFR 1.56. 1098 Off. Gaz. Pat. Office 502 (January 3, 1989). Therefore nothing in this Notice is intended to imply that an investigation was done.

The fee deficiency submission under 37 CFR 1.28 is hereby accepted and the petition is **GRANTED**. Status as a small entity has also been removed.

Inquiries related to this communication should be directed to the Office of Petitions Staff at (571) 272-3282.

Patricia Faison-Ball
Senior Petitions Attorney
Office of Petitions

PTO/SB/66 (03-09)
Approved for use through 03/31/2012. OMB 0651-0016
U.S. Patent and Trademark Office: U.S. DEPARTMENT OF COMMERCE
Under the Paperwork Reduction Act of 1995, no persons are required to respond to a collection of information unless it displays valid OMB control number.

PETITION TO ACCEPT UNINTENTIONALLY DELAYED PAYMENT OF MAINTENANCE FEE IN AN EXPIRED PATENT (37 CFR 1.378(c))

Patent Number	Issue Date (YYYY-MM-DD)	Application Number	Filing Date (YYYY-MM-DD)	Docket Number (if applicable)
6,981,207	2005-12-27	09/481,069	2000-01-11	21/99

CAUTION: Maintenance fee (and surcharge, if any) payment must correctly identify: (1) the patent number and (2) the application number of the actual U.S. application leading to issuance of that patent to ensure the fee(s) is/are associated with the correct patent. 37 CFR 1.366(c) and (d).

SMALL ENTITY

☐ Patentee claims, or has previously claimed, small entity status. See 37 CFR 1.27.

LOSS OF ENTITLEMENT TO SMALL ENTITY STATUS

☒ Patentee is no longer entitled to small entity status. See 37 CFR 1.27(g)

NOT Small Entity			Small Entity		
	Fee	Code		Fee	Code
◉	3 ½ year	(1551)	○	3 ½ year	(2551)
○	7 ½ year	(1552)	○	7 ½ year	(2552)
○	11 ½ year	(1553)	○	11 ½ year	(2553)

SURCHARGE

The surcharge required by 37 CFR 1.20(i)(2) (Fee Code 1558) must be paid as a condition of accepting unintentionally delayed payment of the maintenance fee.

MAINTENANCE FEE (37 CFR 1.20(e)-(g))

The appropriate maintenance fee must be submitted with this petition.

STATEMENT

THE UNDERSIGNED CERTIFIES THAT THE DELAY IN PAYMENT OF THE MAINTENANCE FEE TO THIS PATENT WAS UNINTENTIONAL

PETITIONER(S) REQUEST THAT THE DELAYED PAYMENT OF THE MAINTENANCE FEE BE ACCEPTED AND THE PATENT REINSTATED

THIS PORTION MUST BE COMPLETED BY THE SIGNATORY OR SIGNATORIES

37 CFR 1.378(d) states: "Any petition under this section must be signed by an attorney or agent registered to practice before the Patent and Trademark Office, or by the patentee, the assignee, or other party in interest."

I certify, in accordance with 37 CFR 1.4(d)(4) that I am

◉ An attorney or agent registered to practice before the Patent and Trademark Office

○ A sole patentee

○ A joint patentee; I certify that I am authorized to sign this submission on behalf of all the other patentees.

○ A joint patentee; all of whom are signing this e-petition

○ The assignee of record of the entire interest

PTO/SB/66 (03-09)
Approved for use through 03/31/2012. OMB 0651-0016
U.S. Patent and Trademark Office: U.S. DEPARTMENT OF COMMERCE
Under the Paperwork Reduction Act of 1995, no persons are required to respond to a collection of information unless it displays valid OMB control number.

Patent Practitioner			
A signature of the applicant or representative is required in accordance with 37 CFR 1.33 and 10.18. Please see 37 CFR 1.4(d) for the form of the signature			
Signature	/Kent B. Chambers/	Date (YYYY-MM-DD)	2011-05-23
Name	Kent B. Chambers	Registration Number	38839

This collection of information is required by 37 CFR 1.378(c). The information is required to obtain or retain a benefit by the public which is to file (and by the USPTO to process) an application. Confidentiality is governed by 35 U.S.C. 122 and 37 CFR 1.11 and 1.14. This collection is estimated to take 1 hour to complete, including gathering, preparing, and submitting the completed application form to the USPTO. Time will vary depending upon the individual case. Any comments on the amount of time you require to complete this form and/ or suggestions for reducing this burden, should be sent to the Chief Information Officer, U.S. Patent and Trademark Office, U.S. Department of Commerce, P.O. Box 1450, Alexandria, VA 22313-1450. DO NOT SEND FEES OR COMPLETED FORMS TO THIS ADDRESS. **This form can only be used when in conjunction with EFS-Web. If this form is mailed to the USPTO, it may cause delays in reinstating the patent.**

Privacy Act Statement

The Privacy Act of 1974 (P.L. 93-579) requires that you be given certain information in connection with your submission of the attached form related to a patent application or patent. Accordingly, pursuant to the requirements of the Act, please be advised that: (1) the general authority for the collection of this information is 35 U.S.C. 2(b)(2); (2) furnishing of the information solicited is voluntary; and (3) the principal purpose for which the information is used by the U.S. Patent and Trademark Office is to process and/or examine your submission related to a patent application or patent. If you do not furnish the requested information, the U.S. Patent and Trademark Office may not be able to process and/or examine your submission, which may result in termination of proceedings or abandonment of the application or expiration of the patent.

The information provided by you in this form will be subject to the following routine uses:

1. The information on this form will be treated confidentially to the extent allowed under the Freedom of Information Act (5 U.S.C. 552) and the Privacy Act (5 U.S.C. 552a). Records from this system of records may be disclosed to the Department of Justice to determine whether the Freedom of Information Act requires disclosure of these records.

2. A record from this system of records may be disclosed, as a routine use, in the course of presenting evidence to a court, magistrate, or administrative tribunal, including disclosures to opposing counsel in the course of settlement negotiations.

3. A record in this system of records may be disclosed, as a routine use, to a Member of Congress submitting a request involving an individual, to whom the record pertains, when the individual has requested assistance from the Member with respect to the subject matter of the record.

4. A record in this system of records may be disclosed, as a routine use, to a contractor of the Agency having need for the information in order to perform a contract. Recipients of information shall be required to comply with the requirements of the Privacy Act of 1974, as amended, pursuant to 5 U.S.C. 552a(m).

5. A record related to an International Application filed under the Patent Cooperation Treaty in this system of records may be disclosed, as a routine use, to the International Bureau of the World Intellectual Property Organization, pursuant to the Patent Cooperation Treaty.

6. A record in this system of records may be disclosed, as a routine use, to another federal agency for purposes of National Security review (35 U.S.C. 181) and for review pursuant to the Atomic Energy Act (42 U.S.C. 218(c)).

7. A record from this system of records may be disclosed, as a routine use, to the Administrator, General Services, or his/her designee, during an inspection of records conducted by GSA as part of that agency's responsibility to recommend improvements in records management practices and programs, under authority of 44 U.S.C. 2904 and 2906. Such disclosure shall be made in accordance with the GSA regulations governing inspection of records for this purpose, and any other relevant (i.e., GSA or Commerce) directive. Such disclosure shall not be used to make determinations about individuals.

8. A record from this system of records may be disclosed, as a routine use, to the public after either publication of the application pursuant to 35 U.S.C. 122(b) or issuance of a patent pursuant to 35 U.S.C. 151. Further, a record may be disclosed, subject to the limitations of 37 CFR 1.14, as a routine use, to the public if the record was filed in an application which became abandoned or in which the proceedings were terminated and which application is referenced by either a published application, an application open to public inspections or an issued patent.

9. A record from this system of records may be disclosed, as a routine use, to a Federal, State, or local law enforcement agency, if the USPTO becomes aware of a violation or potential violation of law or regulation.

UNITED STATES PATENT AND TRADEMARK OFFICE

Commissioner for Patents
United States Patent and Trademark Office
P.O. Box 1450
Alexandria, VA 22313-1450
www.uspto.gov

In re Patent No. 6981207
Issue Date: December 27,2005
Application No. 09481069
Filed: January 11,2000
Attorney Docket No. 21/99

:
:DECISION GRANTING PETITION
:UNDER 37 CFR 1.378(c)
:

This is a decision on the electronic petition, filed May 23,2011 ,under 37 CFR 1.378(c) to accept the unintentionally delayed payment of the 3.5 year maintenance fee for the above-identified patent.

The petition is **GRANTED**.

The maintenance fee is accepted, and the above-identified patent reinstated as of May 23,2011 .
This decision also constitutes notice that the fee has been accepted. An electronic copy of the petition and this decision has been created as an entry in the Image File Wrapper. Nevertheless, petitioner should print and retain an independent copy.

Telephone inquiries related to this electronic decision should be directed to the Electronic Business Center at 1-866-217-9197.

UNITED STATES PATENT AND TRADEMARK OFFICE

Commissioner for Patents
United States Patent and Trademark Office
P.O. Box 1450
Alexandria, VA 22313-1450
www.uspto.gov

DALY, CROWLEY, MOFFORD & DURKEE, LLP
SUITE 301A
354A TURNPIKE STREET
CANTON MA 02021-2714

MAILED
NOV 22 2011
OFFICE OF PETITIONS

In re Patent No. 6,775,824 :
Issued: August 10, 2004 :
Application No. 09/481,151 : NOTICE
Filed: January 12, 2000 :
Atty. Dkt. No.: 1360 :

This is a notice regarding your request for acceptance of a fee deficiency submission under 37 CFR 1.28.

The Office no longer investigates or rejects original or reissue applications under 37 CFR 1.56. **1098 Off. Gaz. Pat. Office 502 (January 3, 1989)**. Therefore, nothing in this Notice is intended to imply that an investigation was done.

Your fee deficiency submission under 37 CFR 1.28 is hereby **ACCEPTED**.

This application is no longer entitled to small entity status. Accordingly, all future fees paid in this application must be paid at the large entity rate.

The file does not indicate that a change of correspondence address has been submitted, although the address given on the petition differs from the correspondence address of record. If appropriate, a change of correspondence address should be filed in accordance with MPEP 601.03. A courtesy copy of this decision is being mailed to the address given on the petition; however, the Office will mail all future correspondence solely to the correspondence address of record.

Inquiries related to this communication should be directed to the undersigned at (571) 272-3205.

/ALESIA M. BROWN/

Alesia M. Brown
Attorney Advisor
Office of Petitions

CC: PETAR KRAGULJAC
Kraguljac & Kalnay, LLC
4700 Rockside Road
Summit One, Suite 510
Independence, OH 44131

UNITED STATES PATENT AND TRADEMARK OFFICE

Commissioner for Patents
United States Patent and Trademark Office
P.O. Box 1450
Alexandria, VA 22313-1450
www.uspto.gov

In re Patent No. 6341992
Issue Date: January 29,2002
Application No. 09481742
Filed: January 11,2000
Attorney Docket No.

:
:DECISION GRANTING PETITION
:UNDER 37 CFR 1.378(c)
:

This is a decision on the electronic petition, filed March 2,2011 ,under 37 CFR 1.378(c) to accept the unintentionally delayed payment of the 7.5 year maintenance fee for the above-identified patent.

The petition is **GRANTED**.

The maintenance fee is accepted, and the above-identified patent reinstated as of March 2,2011 . This decision also constitutes notice that the fee has been accepted. An electronic copy of the petition and this decision has been created as an entry in the Image File Wrapper. Nevertheless, petitioner should print and retain an independent copy.

Telephone inquiries related to this electronic decision should be directed to the Electronic Business Center at 1-866-217-9197.

PTO/SB/66 (03-09)
Approved for use through 03/31/2012. OMB 0651-0016
U.S. Patent and Trademark Office: U.S. DEPARTMENT OF COMMERCE
Under the Paperwork Reduction Act of 1995, no persons are required to respond to a collection of information unless it displays valid OMB control number.

PETITION TO ACCEPT UNINTENTIONALLY DELAYED PAYMENT OF MAINTENANCE FEE IN AN EXPIRED PATENT (37 CFR 1.378(c))

Patent Number	Issue Date (YYYY-MM-DD)	Application Number	Filing Date (YYYY-MM-DD)	Docket Number (if applicable)
6341992	2002-01-29	09481742	2000-01-11	BrownJBoatSteer

CAUTION: Maintenance fee (and surcharge, if any) payment must correctly identify: (1) the patent number and (2) the application number of the actual U.S. application leading to issuance of that patent to ensure the fee(s) is/are associated with the correct patent. 37 CFR 1.366(c) and (d).

SMALL ENTITY

☒ Patentee claims, or has previously claimed, small entity status. See 37 CFR 1.27.

LOSS OF ENTITLEMENT TO SMALL ENTITY STATUS

☐ Patentee is no longer entitled to small entity status. See 37 CFR 1.27(g)

NOT Small Entity	Fee	Code	Small Entity	Fee	Code
○	3 ½ year	(1551)	○	3 ½ year	(2551)
○	7 ½ year	(1552)	◉	7 ½ year	(2552)
○	11 ½ year	(1553)	○	11 ½ year	(2553)

SURCHARGE

The surcharge required by 37 CFR 1.20(i)(2) (Fee Code 1558) must be paid as a condition of accepting unintentionally delayed payment of the maintenance fee.

MAINTENANCE FEE (37 CFR 1.20(e)-(g))

The appropriate maintenance fee must be submitted with this petition.

STATEMENT

THE UNDERSIGNED CERTIFIES THAT THE DELAY IN PAYMENT OF THE MAINTENANCE FEE TO THIS PATENT WAS UNINTENTIONAL

PETITIONER(S) REQUEST THAT THE DELAYED PAYMENT OF THE MAINTENANCE FEE BE ACCEPTED AND THE PATENT REINSTATED

THIS PORTION MUST BE COMPLETED BY THE SIGNATORY OR SIGNATORIES

37 CFR 1.378(d) states: "Any petition under this section must be signed by an attorney or agent registered to practice before the Patent and Trademark Office, or by the patentee, the assignee, or other party in interest."

I certify, in accordance with 37 CFR 1.4(d)(4) that I am

◉ An attorney or agent registered to practice before the Patent and Trademark Office

○ A sole patentee

○ A joint patentee; I certify that I am authorized to sign this submission on behalf of all the other patentees.

○ A joint patentee; all of whom are signing this e-petition

○ The assignee of record of the entire interest

PTO/SB/66 (03-09)
Approved for use through 03/31/2012. OMB 0651-0016
U.S. Patent and Trademark Office: U.S. DEPARTMENT OF COMMERCE
Under the Paperwork Reduction Act of 1995, no persons are required to respond to a collection of information unless it displays valid OMB control number.

Patent Practitioner			
A signature of the applicant or representative is required in accordance with 37 CFR 1.33 and 10.18. Please see 37 CFR 1.4(d) for the form of the signature			
Signature	/David Pressman/	Date (YYYY-MM-DD)	2011-03-02
Name	David Pressman	Registration Number	21104

This collection of information is required by 37 CFR 1.378(c). The information is required to obtain or retain a benefit by the public which is to file (and by the USPTO to process) an application. Confidentiality is governed by 35 U.S.C. 122 and 37 CFR 1.11 and 1.14. This collection is estimated to take 1 hour to complete, including gathering, preparing, and submitting the completed application form to the USPTO. Time will vary depending upon the individual case. Any comments on the amount of time you require to complete this form and/ or suggestions for reducing this burden, should be sent to the Chief Information Officer, U.S. Patent and Trademark Office, U.S. Department of Commerce, P.O. Box 1450, Alexandria, VA 22313-1450. DO NOT SEND FEES OR COMPLETED FORMS TO THIS ADDRESS. **This form can only be used when in conjunction with EFS-Web. If this form is mailed to the USPTO, it may cause delays in reinstating the patent.**

Privacy Act Statement

The Privacy Act of 1974 (P.L. 93-579) requires that you be given certain information in connection with your submission of the attached form related to a patent application or patent. Accordingly, pursuant to the requirements of the Act, please be advised that: (1) the general authority for the collection of this information is 35 U.S.C. 2(b)(2); (2) furnishing of the information solicited is voluntary; and (3) the principal purpose for which the information is used by the U.S. Patent and Trademark Office is to process and/or examine your submission related to a patent application or patent. If you do not furnish the requested information, the U.S. Patent and Trademark Office may not be able to process and/or examine your submission, which may result in termination of proceedings or abandonment of the application or expiration of the patent.

The information provided by you in this form will be subject to the following routine uses:

1. The information on this form will be treated confidentially to the extent allowed under the Freedom of Information Act (5 U.S.C. 552) and the Privacy Act (5 U.S.C. 552a). Records from this system of records may be disclosed to the Department of Justice to determine whether the Freedom of Information Act requires disclosure of these records.

2. A record from this system of records may be disclosed, as a routine use, in the course of presenting evidence to a court, magistrate, or administrative tribunal, including disclosures to opposing counsel in the course of settlement negotiations.

3. A record in this system of records may be disclosed, as a routine use, to a Member of Congress submitting a request involving an individual, to whom the record pertains, when the individual has requested assistance from the Member with respect to the subject matter of the record.

4. A record in this system of records may be disclosed, as a routine use, to a contractor of the Agency having need for the information in order to perform a contract. Recipients of information shall be required to comply with the requirements of the Privacy Act of 1974, as amended, pursuant to 5 U.S.C. 552a(m).

5. A record related to an International Application filed under the Patent Cooperation Treaty in this system of records may be disclosed, as a routine use, to the International Bureau of the World Intellectual Property Organization, pursuant to the Patent Cooperation Treaty.

6. A record in this system of records may be disclosed, as a routine use, to another federal agency for purposes of National Security review (35 U.S.C. 181) and for review pursuant to the Atomic Energy Act (42 U.S.C. 218(c)).

7. A record from this system of records may be disclosed, as a routine use, to the Administrator, General Services, or his/her designee, during an inspection of records conducted by GSA as part of that agency's responsibility to recommend improvements in records management practices and programs, under authority of 44 U.S.C. 2904 and 2906. Such disclosure shall be made in accordance with the GSA regulations governing inspection of records for this purpose, and any other relevant (i.e., GSA or Commerce) directive. Such disclosure shall not be used to make determinations about individuals.

8. A record from this system of records may be disclosed, as a routine use, to the public after either publication of the application pursuant to 35 U.S.C. 122(b) or issuance of a patent pursuant to 35 U.S.C. 151. Further, a record may be disclosed, subject to the limitations of 37 CFR 1.14, as a routine use, to the public if the record was filed in an application which became abandoned or in which the proceedings were terminated and which application is referenced by either a published application, an application open to public inspections or an issued patent.

9. A record from this system of records may be disclosed, as a routine use, to a Federal, State, or local law enforcement agency, if the USPTO becomes aware of a violation or potential violation of law or regulation.

UNITED STATES PATENT AND TRADEMARK OFFICE

Commissioner for Patents
United States Patent and Trademark Office
P.O. Box 1450
Alexandria, VA 22313-1450
www.uspto.gov

LEONARD TACHNER, A PROFESSIONAL LAW CORPORATION
17961 SKY PARK CIRCLE, SUITE 38-E
IRVINE CA 92614

MAILED

FEB 10 2011

OFFICE OF PETITIONS

In re Patent No. 6,463,640 :
Issue Date: October 15, 2002 : DECISION ON PETITION
Application No. 09/483,145 :
Filed: January 13, 2000 :
Attorney Docket No. ATOMIC-10 :

This is a decision in response to the petition under 37 CFR 1.378(b), filed January 3, 2011, to accept the delayed payment of the maintenance fee for the above-identified patent.

The petition under 37 CFR 1.378(b) is **dismissed** without prejudice to reconsideration.

If reconsideration of this decision is desired, a petition for reconsideration under 37 CFR 1.378(e) must be filed within TWO (2) MONTHS from the mail date of this decision. No extension of this two-month time limit can be granted under 37 CFR 1.136(a) or (b). Any such petition for reconsideration must be accompanied by the petition fee of $400.00 as set forth in 37 CFR 1.17(f). The petition for reconsideration should include an exhaustive attempt to provide the lacking item(s) noted below because the Director will not undertaken any further reconsideration or review of the matter after a decision on the petition for reconsideration.

The patent issued on October 15, 2002. The first maintenance fee could have been paid during the period from Monday, October 17, 2005 through Monday, April 17, 2006, or with a surcharge during the period from Tuesday, April 18, 2006 through Monday, October 16, 2006. Accordingly, this patent expired on October 16, 2006, for failure to timely remit the first maintenance fee.

A grantable petition to accept a delayed maintenance fee payment under 37 CFR 1.378(b) must include the following:

(1) the required maintenance fee set forth in § 1.20(e) through (g);

(2) the surcharge set forth in § 1.20(i)(1); and

(3) a showing that the delay was unavoidable since reasonable care was taken to ensure that the maintenance fee would be paid timely and that the petition was filed promptly after the patentee was notified of, or otherwise became aware of, the expiration of the patent. The showing must enumerate the steps taken to ensure timely payment of the maintenance fee, the date and the manner in which patentee became aware of the expiration of the patent, and the steps taken to file the petition promptly.

This petition lacks requirement (3).

As 35 U.S.C. 41(c) requires the payment of fees at specified intervals to maintain a patent in force, rather than some response to a specific action by the Office under 35 U.S.C. 133, a reasonably prudent person in the exercise of due care and diligence would have taken steps to ensure the timely payment of such maintenance fees. Ray v. Lehman, 55 F.3d 606, 609, 34 USPQ2d 1786, 1788 (Fed. Cir. 1995).

That is, an adequate showing that the delay in payment of the maintenance fee at issue was "unavoidable" within the meaning of 35 U.S.C. 41(c) and 37 CFR 1.378(b)(3) requires a showing of the steps taken to ensure the timely payment of the maintenance fees for this patent. Id. Thus, where the record fails to disclose that the patentee took reasonable steps, or discloses that the patentee took no steps, to ensure timely payment of the maintenance fee, 35 U.S.C. 41(c) and 37 CFR 1.378(b)(3) preclude acceptance of the delayed payment of the maintenance fee under 37 CFR 1.378(b).

Acceptance of a late maintenance fee under the unavoidable delay standard is considered under the same standard for reviving an abandoned application under 35 U.S.C. 133. This is a very stringent standard. Decisions on reviving abandoned applications on the basis of "unavoidable" delay have adopted the reasonably prudent person standard in determining if the delay was unavoidable:

> The word 'unavoidable' . . . is applicable to ordinary human affairs, and requires no more or greater care or diligence than is generally used and observed by prudent and careful men in relation to their most important business. It permits them in the exercise of this care to rely upon the ordinary and trustworthy agencies of mail and telegraph, worthy and reliable employees, and such other means and instrumentalities as are usually employed in such important business. If unexpectedly, or through the unforeseen fault or imperfection of these agencies and instrumentalities, there occurs a failure, it may properly be said to be unavoidable, all other conditions of promptness in its rectification being present.

In re Mattullath, 38 App. D.C. 497, 514-15 (1912) (quoting Pratt, 1887 Dec. Comm'r Pat. 31, 32-33 (1887)); see also Winkler v. Ladd, 221 F. Supp. 550, 552, 138 USPQ 666, 667-68 (D.D.C. 1963), aff'd, 143 USPQ 172 (D.C. Cir. 1963); Ex parte Henrich, 1913 Dec. Comm'r Pat. 139, 141 (1913). In addition, decisions on revival are made on a "case-by-case basis, taking all the facts and circumstances into account." Smith v. Mossinghoff, 671 F.2d 533, 538, 213 USPQ 977, 982 (D.C. Cir. 1982). Finally, a petition cannot be granted where a petitioner has failed to meet his or her burden of

establishing that the delay was "unavoidable." Haines v. Quigg, 673 F. Supp. 314, 316-17, 5 USPQ2d 1130, 1131-32 (N.D. Ind. 1987). Moreover, patentee's lack of knowledge of the need to pay the maintenance fee and the failure to receive the Maintenance Fee Reminder do not constitute unavoidable delay. See Patent No. 4,409,763, 7 USPQ2d 1798 (Comm'r Pat. 1988).

In determining whether the delay in paying a maintenance fee was unavoidable, one looks to whether the party responsible for payment of the maintenance fee exercised the due care of a reasonably prudent person. Ray v. Lehman, 55 F.3d 606, 608-609, 34 USPQ2d 1786, 1787 (Fed. Cir. 1995). The patent owner at the time of the expiration of the patent is ultimately the person responsible to ensure the timely payment of the maintenance fees. The patent owner may engage another to track and/or pay the maintenance fees; however, merely engaging another does not relieve the patent owner from his obligation to take appropriate steps to ensure the timely payment of such maintenance fees. See California Medical Prods. v. Tecnol Medical Prods., 921 F. Supp. 1219 (D. Del. 1995). Moreover, the USPTO must rely on the actions or inactions of duly authorized and voluntarily chosen representatives of an applicant, and an applicant is bound by the consequences of those actions or inactions. Link v. Wabash, 370 U.S. 626, 633-34 (1962); Huston v. Ladner, 973 F.2d 1564, 1567, 23 USPQ2d 1910, 1913 (Fed. Cir. 1992). Specifically, delay caused by the actions or inactions of a voluntarily chosen representative does not constitute unavoidable delay. Haines v. Quigg, 673 F. Supp. 314, 5 USPQ2d 1130 (D. Ind. 1987).

In the present petition, petitioner asserted that over a protracted period beginning in 2005, counsel's office manager, Ms. Foreman, experienced a medical condition that caused her to fail in her office duties which included notifying the patentee of the need to pay the maintenance fees, obtaining the client's authorization to pay the maintenance fee, and proceeding to send the payment to the USPTO. In support of the petition, petitioners provided a statement from patent practitioner Leonard Tachner, office manager Ms. Foreman, and Dr. Samuel A. Albert.

To establish a showing of "unavoidable" delay based upon medical incapacitation, petitioner must demonstrate that the incapacitation was of such a nature and degree as to render the person unable to conduct business (*e.g.*, correspond with the USPTO) during the period when the maintenance fee was due. Such a showing must be supported by a statement(s) from the person's treating physician(s), and such statement(s) must provide the nature and degree of the person's medical condition during the period from when the maintenance was due (*i.e.*, October 16, 2006) until the filing of a grantable petition. Namely, petitioner should provide the USPTO with a statement from a treating physician, asserting that from the time the maintenance fee was due (*i.e.*, October 16, 2006) until the filing of a grantable petition, the person's medical condition was of such a degree of severity that it prevented her from timely paying the maintenance fee. Additionally, the treating physician must describe person's medical condition, the degree of incapacitation, and the duration of the medical illness.

In this instance, petitioner has not provided sufficient evidence at this time to show that "but for" Ms. Foreman's medical condition, the maintenance fee would have been timely paid. The Office is particularly interested in the duration of Ms. Foreman's medical condition - the date of when Ms. Foreman's medical condition began until the date she sought treatment. Petitioner may wish to

provide a statement from her treating physician. Additionally, petitioner should submit a statement from Ms. Foreman explaining in detail the exact actions or inactions she took with regard to the docketing and timely paying of the maintenance fees for this patent. The present statements submitted on petition provide the Office with generalities as to the actions/inactions of Ms. Foreman that ultimately resulted in the delayed payment of the maintenance fees.

In summary, petitioner must show that Ms. Foreman's medical condition was the cause of the error in failing to timely pay the maintenance fee; her condition was of such a degree of severity that it prevented her from performing specific duties with regard to the docketing and paying of the maintenance fee for this patent; and that her condition spanned the entire period from the due date for the maintenance fee until the date of the filing of a grantable petition. Without any further explanation or documentary evidence, the Office is left to speculate as to the circumstances that transpired.

The Office cautions petitioner to remove or mark through any personal information in any document submitted to the USPTO that could contribute to identity theft. Personal information such as social security numbers, bank account numbers, or credit card numbers (other than a check or credit card authorization form PTO-2038 submitted for payment purposes) is never required by the USPTO to support a petition or an application. If this type of personal information is included in documents submitted to the USPTO, petitioner should consider deleting such personal information from the documents before submitting them to the USPTO. Petitioner is advised that the patent file is available to the public after the issuance of a patent. However, checks and credit card authorization forms (PTO-2038) submitted for payment purposes are not retained in the application file, and therefore, are not publicly available.

For the reasons stated, the petition is **dismissed**.

Petitioner should note that if this petition under 37 CFR 1.378(b)/(e) is not renewed, or if renewed and not granted, petitioner may obtain a refund of the maintenance fee and post-expiration surcharge . The $400.00 petition fee for seeking further reconsideration is not refundable

Any request for refund should be in writing to the following address:

Mail Stop 16
Director of the US Patent and Trademark Office
PO Box 1450
Alexandria, VA 22313-1450

A copy of this decision should accompany petitioner's request.

The Office charged the deposit account for the $490.00 maintenance fee due at 3.5 years, the $1,240.00 maintenance fee due at 7.5 years, and the $700.00 surcharge after expiration as authorized.

Further correspondence with respect to this matter should be addressed as follows:

By mail: Mail Stop Petition
Commissioner for Patents
P.O. Box 1450
Alexandria, VA 22313-1450

By FAX: (571) 273-8300
Attn: Office of Petitions

By hand: Customer Services Window
Randolph Building
401 Dulany Street
Alexandria, VA 22314

Correspondence may also be submitted electronically via EFS-Web.

The patent file is being returned to Files Repository.

Telephone inquiries regarding this decision may be directed to the undersigned at (571) 272-3211.

Christina Tartera Donnell

Christina Tartera Donnell
Senior Petitions Attorney
Office of Petitions

UNITED STATES PATENT AND TRADEMARK OFFICE

Commissioner for Patents
United States Patent and Trademark Office
P.O. Box 1450
Alexandria, VA 22313-1450
www.uspto.gov

Leonard Tachner
Suite 38-E
17961 Sky Park Circle
Irvine, CA 92614

MAILED

OCT 06 2011

OFFICE OF PETITIONS

In re Patent of Toth :
Patent No. 6,463,640 :
Issue Date: October 15, 2002 : Request for Information
Application No. 09/483,145 :
Filing Date: January 13, 2000 :
Attorney Docket No. Atomic-10 :

Request for Information

This communication responds to the renewed petition under 37 C.F.R. § 1.378(b) filed April 11, 2011, and responds to a letter filed April 22, 2011.

By Petitioner's own admission, the Tachner firm, or persons employed by that firm, have not been truthful with the USPTO. Furthermore, there is a specter of bias in the declaration of Dr. Albert since, at the time of his diagnosis, he was not Janis Foreman's doctor and he was paid to provide his opinion by Mr. Tachner. The record fails to include any evidence corroborating Dr. Albert's diagnosis. Given the circumstances of this case, corroborating evidence for Dr. Albert's diagnosis is required.

It is extremely odd that the people that were closest to Ms. Foreman did not notice that, as stated by Dr. Albert, she exhibited "destabilizing behavior" or that "she lost her sense of reality" or "lost her sense of proportionality." Further, as stated in Mr. Tachner's declaration, it appears that for about two years, Ms. Foreman was failing to bill clients or pay firm obligations even though the performance of these tasks appears to have been her primary duty. Therefore, it is not clear from the record how Mr. Tachner could have failed to recognize Ms. Foreman was failing to properly bill clients and pay firm obligations.

In response to the instant request for information, Petitioner is required to provide a rebuttal to all the assertions set forth in the petition filed July 21, 2010 in U.S. Patent No. 6,205,885.[1] Furthermore, Petitioner must explain why the current explanation provided in this case is any more believable than other explanations previously provided. Petitioner is required to provide

[1] A copy of the petition can be accessed using the Office's Public Patent Application Information Retrieval system located at http://portal.uspto.gov/external/portal/pair.

corroborating evidence of Ms. Foreman's condition from a source that is independent of Dr. Albert. Additionally, Petitioner must fully discuss how the actions of Ms. Foreman, with regard to the docket, went undetected from early 2005 until January 2011. Further, Petitioner must explain how Ms. Foreman's failure to bill clients and pay firm obligations went undetected from early 2005 until the end of 2007.

Petitioner must submit the requested information within TWO MONTHS of the mailing date of this letter. Extensions of time may not be obtained. No additional fee is due for a response to the instant request for information. The response to this Requirement for Information should include a cover letter entitled "Response to Request for Information." The failure to file a reply to the instant Request for Information will be interpreted as a desire to no longer pursue reinstatement of the patent and the Office will give no further consideration to the matter.

Petitioner filed a letter on April 22, 2011, in this case and in Patent No. 5,803,073. The letter states, "We have noticed that [an] extra $1,240 in fees was charged for 6,463,640 on April 14, 2011." The letter requests the Office "correct the overcharge." The April 11, 2011 petition filed in this case instructed the Office to charge the deposit account $1,240 for the 7.5 year maintenance fee and $400 for the request for reconsideration. The Office charged the deposit account $2,880 and $400. Therefore, a refund of *$1,640* ($2,880 - $1,240) is warranted and the sum of $1,640 has been credited back to the deposit account.

Telephone inquiries regarding this communication should be directed to Petitions Attorney Steven Brantley at (571) 272-3203.

Anthony Knight
Director
Office of Petitions

UNITED STATES PATENT AND TRADEMARK OFFICE

Commissioner for Patents
United States Patent and Trademark Office
P.O. Box 1450
Alexandria, VA 22313-1450
www.uspto.gov

Leonard Tachner
Suite 38-E
17961 Sky Park Circle
Irvine, CA 92614

MAILED
FEB 29 2012
OFFICE OF PETITIONS

In re Patent of Toth :
Patent No. 6,463,640 :
Issue Date: October 15, 2002 : Decision on Petition and
Application No. 09/483,145 : Second Request for Information
Filing Date: January 13, 2000 :
Attorney Docket No. Atomic-10 :

The instant paper addresses the response to a prior Request for Information and the petition under 37 C.F.R. § 1.183 filed December 19, 2011.

The Petition under 37 C.F.R. § 1.183

The Office mailed a Request for Information on October 6, 2011. The request set a non-extendable period for reply of two months from the mailing date of the request. Petitioner requests waiver of the two-month time limit. The Office has determined justice supports waiver of the time limit and the petition under 37 C.F.R. § 1.183 is hereby **granted**.

Second Request for Information

This paper refers to the patents identified below as follows:

1.	U.S. Patent No. 5,678,541	Atomic-1
2.	U.S. Patent No. 5,803,073	Atomic-2
3.	U.S. Patent No. 6,098,924	Non-Atomic-1
4.	U.S. Patent No. 6,347,766	Non-Atomic-2
5.	U.S. Patent No. 6,463,640	Atomic-10
6.	U.S. Patent No. 6,761,163	Atomic-14

Maintenances Fee Paid During 2000-2001

Tachner paid the 3.5 year maintenance fee for Atomic-2 on September 21, 2000. The Office assumes Tachner sent an invoice for the fee to Petitioner.

Tachner paid the 3.5 year maintenance fee for Atomic-1, and sent Petitioner an invoice for the fee, on October 22, 2001.

Maintenance Fees Paid During 2002-2003

The record does not show that Tachner paid any maintenance fees on behalf of Petitioner during 2002 or 2003.

Maintenance and Annual Fees Paid During 2004

The petition refers to two EPO applications. The two applications appear to have issued as European Patent Nos. 0901400 ("E1") and ("E2") during 2003.[1] Tachner paid annual fees for E1 and E2 on April 7, 2004, and April 8, 2004. The Office assumes Tachner sent Petitioner one or more invoices for these fees.

Tachner paid the 3.5 year maintenance fee for Non-Atomic-1 on April 15, 2004. The Office assumes Tachner sent Petitioner an invoice for the fee.

Tachner paid the 7.5 year maintenance fee for Atomic-2 on July 9, 2004. The Office assumes Tachner sent Petitioner an invoice for the fee.

Maintenance and Annual Fees Paid Between January 1, 2005, and November 1, 2010

The Office is unaware of Tachner paying any maintenance fees or annual fees on behalf of Petitioner between January 1, 2005, and November 1, 2010.

E1 "lapsed" during 2005 as a result of the non-payment of annual fees due for E1.

E2 "lapsed" during 2005 as a result of the non-payment of annual fees due for E2.

Atomic-1 expired during 2005 as a result of the non-payment of the 7.5 year maintenance fee.

Non-Atomic-2 expired during 2006 as a result of the non-payment of the 3.5 year maintenance fee.

Atomic-10 expired during 2006 as a result of the non-payment of the 3.5 year maintenance fee.

Non-Atomic-1 expired during 2008 as a result of the non-payment of the 7.5 year maintenance fee.

Atomic-14 expired during 2008 as a result of the non-payment of the 3.5 year maintenance fee. The Office notes, if the 7.5 year maintenance fee had been timely paid for Atomic-1, the 11.5 year fee for the patent would have been due in 2009.

[1] The information in this request pertaining to the European patents is based on information obtained from http://www.epo.org/searching/free/espacenet.html.

The Office notes, if the prior maintenance fees for Atomic-2, Non-Atomic-2, and Atomic-10 had been timely paid, a maintenance fee would have been due for each of these patents on dates prior to Petitioner inquiring into the status of the patents.

Discussion

As recognized in the Response, "Even though a patentee may be able to show that its delay was caused by attorney deception, the patentee is still required to show that it acted reasonably and responsibly to keep the patent maintained."[2]

Petitioner has not shown diligence in this matter since it appears that petitioner did not inquire into the status of Petitioner's patents until more than six years and three months after receiving an invoice for a maintenance fee or annual fee from Tachner.[3] The Office requests Petitioner provide an explanation for Petitioner's apparent failure to inquire into the status of the patents on an earlier date.

The Office requests Petitioner supply a copy of invoices pertaining to the annual fees for E1 or E2. The invoices are relevant in so far as the invoices may state the invoices apply to "annual" fees for E1 and E2. In other words, the invoices might include information indicating Petitioner should expect to receive invoices for the fees each year.

In addition to the information requested above, the Office requests Petitioner supply any and all other information Petitioner wishes for the Office to consider in the future when determining if the record demonstrates Petitioner's diligence in inquiring into the status of Petitioner's patents was consistent with the level of care generally used by reasonable and prudent individuals when handling their most important business.

Address of Record

The Response is signed by Everett D. Robinson. Mr. Robinson does not appear to be an attorney or agent of record in this case and the address listed in the Response is different than the address of record. A courtesy copy of this decision is being mailed to Mr. Robinson at the address in the Response. However, all future correspondence will be directed solely to the address currently of record until such time as appropriate instructions are received to the contrary.

Fees

The Response includes a payment of $3,090. The 3.5 year maintenance fee, the 7.5 year maintenance fee, a $700 surcharge, and a $400 for the prior request for reconsideration have previously been submitted. As a result, the only fee due with the papers filed December 19, 2011, is the $400 fee required for the petition under 37 C.F.R. § 1.183. Therefore, the Office has credited $2,690 ($3,090 - $400) back to the credit card used to pay the $3,090.

---

[2] Response, p. 7.

[3] The Office assumes Tachner sent an invoice to Petitioner during July 2004 for the maintenance paid for Atomic-2 on July 7, 2004.

Further correspondence with respect to this matter may be submitted as follows:

By Internet: A request for reconsideration may be filed electronically using EFS Web.[4] Document Code "PET.OP" should be used if the request is filed electronically.

By mail:
Mail Stop Petition
Commissioner for Patents
P.O. Box 1450
Alexandria, VA 22313-1450

By facsimile: (571) 273-8300
Attn: Office of Petitions

By hand:
U.S. Patent and Trademark Office
Customer Service Window
Randolph Building
401 Dulany Street
Alexandria, VA 22314

Telephone inquiries regarding this communication should be directed to Petitions Attorney Steven Brantley at (571) 272-3203.

Charles Steven Brantley
Senior Petitions Attorney
Office of Petitions

cc: Everett D. Robinson
Echelon IP, LLC
P.O. Box 1047
American Fork, UT 84003

[4] General Information concerning EFS Web can be found at http://www.uspto.gov/patents/process/file/efs/index.jsp.

UNITED STATES PATENT AND TRADEMARK OFFICE

Commissioner for Patents
United States Patent and Trademark Office
P.O. Box 1450
Alexandria, VA 22313-1450
www.uspto.gov

In re Patent No. 6222504
Issue Date: April 24,2001
Application No. 09483198
Filed: January 14,2000
Attorney Docket No. 245/083

:
:DECISION GRANTING PETITION
:UNDER 37 CFR 1.378(c)
:

This is a decision on the electronic petition, filed October 4,2010 ,under 37 CFR 1.378(c) to accept the unintentionally delayed payment of the 7.5 year maintenance fee for the above-identified patent.

The petition is **GRANTED**.

The maintenance fee is accepted, and the above-identified patent reinstated as of October 4,2010 .
This decision also constitutes notice that the fee has been accepted. An electronic copy of the petition and this decision has been created as an entry in the Image File Wrapper. Nevertheless, petitioner should print and retain an independent copy.

Telephone inquiries related to this electronic decision should be directed to the Electronic Business Center at 1-866-217-9197.

PTO/SB/66 (03-09)
Approved for use through 03/31/2012. OMB 0651-0016
U.S. Patent and Trademark Office: U.S. DEPARTMENT OF COMMERCE
Under the Paperwork Reduction Act of 1995, no persons are required to respond to a collection of information unless it displays valid OMB control number.

PETITION TO ACCEPT UNINTENTIONALLY DELAYED PAYMENT OF MAINTENANCE FEE IN AN EXPIRED PATENT (37 CFR 1.378(c))

Patent Number	Issue Date (YYYY-MM-DD)	Application Number	Filing Date (YYYY-MM-DD)	Docket Number (if applicable)
6222504	2001-04-24	09483198	2000-01-14	245/083

CAUTION: Maintenance fee (and surcharge, if any) payment must correctly identify: (1) the patent number and (2) the application number of the actual U.S. application leading to issuance of that patent to ensure the fee(s) is/are associated with the correct patent. 37 CFR 1.366(c) and (d).

SMALL ENTITY

☐ Patentee claims, or has previously claimed, small entity status. See 37 CFR 1.27.

LOSS OF ENTITLEMENT TO SMALL ENTITY STATUS

☐ Patentee is no longer entitled to small entity status. See 37 CFR 1.27(g)

NOT Small Entity

	Fee	Code
○	3 ½ year	(1551)
◉	7 ½ year	(1552)
○	11 ½ year	(1553)

Small Entity

	Fee	Code
○	3 ½ year	(2551)
○	7 ½ year	(2552)
○	11 ½ year	(2553)

SURCHARGE

The surcharge required by 37 CFR 1.20(i)(2) (Fee Code 1558) must be paid as a condition of accepting unintentionally delayed payment of the maintenance fee.

MAINTENANCE FEE (37 CFR 1.20(e)-(g))

The appropriate maintenance fee must be submitted with this petition.

STATEMENT

THE UNDERSIGNED CERTIFIES THAT THE DELAY IN PAYMENT OF THE MAINTENANCE FEE TO THIS PATENT WAS UNINTENTIONAL

PETITIONER(S) REQUEST THAT THE DELAYED PAYMENT OF THE MAINTENANCE FEE BE ACCEPTED AND THE PATENT REINSTATED

THIS PORTION MUST BE COMPLETED BY THE SIGNATORY OR SIGNATORIES

37 CFR 1.378(d) states: "Any petition under this section must be signed by an attorney or agent registered to practice before the Patent and Trademark Office, or by the patentee, the assignee, or other party in interest."

I certify, in accordance with 37 CFR 1.4(d)(4) that I am

◉ An attorney or agent registered to practice before the Patent and Trademark Office

○ A sole patentee

○ A joint patentee; I certify that I am authorized to sign this submission on behalf of all the other patentees.

○ A joint patentee; all of whom are signing this e-petition

○ The assignee of record of the entire interest

PTO/SB/66 (03-09)
Approved for use through 03/31/2012. OMB 0651-0016
U.S. Patent and Trademark Office: U.S. DEPARTMENT OF COMMERCE
Under the Paperwork Reduction Act of 1995, no persons are required to respond to a collection of information unless it displays valid OMB control number.

Patent Practitioner			
A signature of the applicant or representative is required in accordance with 37 CFR 1.33 and 10.18. Please see 37 CFR 1.4(d) for the form of the signature			
Signature	/Kendal M. Sheets/	Date (YYYY-MM-DD)	2010-09-30
Name	Kendal M. Sheets	Registration Number	47077

This collection of information is required by 37 CFR 1.378(c). The information is required to obtain or retain a benefit by the public which is to file (and by the USPTO to process) an application. Confidentiality is governed by 35 U.S.C. 122 and 37 CFR 1.11 and 1.14. This collection is estimated to take 1 hour to complete, including gathering, preparing, and submitting the completed application form to the USPTO. Time will vary depending upon the individual case. Any comments on the amount of time you require to complete this form and/ or suggestions for reducing this burden, should be sent to the Chief Information Officer, U.S. Patent and Trademark Office, U.S. Department of Commerce, P.O. Box 1450, Alexandria, VA 22313-1450. DO NOT SEND FEES OR COMPLETED FORMS TO THIS ADDRESS. **This form can only be used when in conjunction with EFS-Web. If this form is mailed to the USPTO, it may cause delays in reinstating the patent.**

Privacy Act Statement

The Privacy Act of 1974 (P.L. 93-579) requires that you be given certain information in connection with your submission of the attached form related to a patent application or patent. Accordingly, pursuant to the requirements of the Act, please be advised that: (1) the general authority for the collection of this information is 35 U.S.C. 2(b)(2); (2) furnishing of the information solicited is voluntary; and (3) the principal purpose for which the information is used by the U.S. Patent and Trademark Office is to process and/or examine your submission related to a patent application or patent. If you do not furnish the requested information, the U.S. Patent and Trademark Office may not be able to process and/or examine your submission, which may result in termination of proceedings or abandonment of the application or expiration of the patent.

The information provided by you in this form will be subject to the following routine uses:

1. The information on this form will be treated confidentially to the extent allowed under the Freedom of Information Act (5 U.S.C. 552) and the Privacy Act (5 U.S.C. 552a). Records from this system of records may be disclosed to the Department of Justice to determine whether the Freedom of Information Act requires disclosure of these records.

2. A record from this system of records may be disclosed, as a routine use, in the course of presenting evidence to a court, magistrate, or administrative tribunal, including disclosures to opposing counsel in the course of settlement negotiations.

3. A record in this system of records may be disclosed, as a routine use, to a Member of Congress submitting a request involving an individual, to whom the record pertains, when the individual has requested assistance from the Member with respect to the subject matter of the record.

4. A record in this system of records may be disclosed, as a routine use, to a contractor of the Agency having need for the information in order to perform a contract. Recipients of information shall be required to comply with the requirements of the Privacy Act of 1974, as amended, pursuant to 5 U.S.C. 552a(m).

5. A record related to an International Application filed under the Patent Cooperation Treaty in this system of records may be disclosed, as a routine use, to the International Bureau of the World Intellectual Property Organization, pursuant to the Patent Cooperation Treaty.

6. A record in this system of records may be disclosed, as a routine use, to another federal agency for purposes of National Security review (35 U.S.C. 181) and for review pursuant to the Atomic Energy Act (42 U.S.C. 218(c)).

7. A record from this system of records may be disclosed, as a routine use, to the Administrator, General Services, or his/her designee, during an inspection of records conducted by GSA as part of that agency's responsibility to recommend improvements in records management practices and programs, under authority of 44 U.S.C. 2904 and 2906. Such disclosure shall be made in accordance with the GSA regulations governing inspection of records for this purpose, and any other relevant (i.e., GSA or Commerce) directive. Such disclosure shall not be used to make determinations about individuals.

8. A record from this system of records may be disclosed, as a routine use, to the public after either publication of the application pursuant to 35 U.S.C. 122(b) or issuance of a patent pursuant to 35 U.S.C. 151. Further, a record may be disclosed, subject to the limitations of 37 CFR 1.14, as a routine use, to the public if the record was filed in an application which became abandoned or in which the proceedings were terminated and which application is referenced by either a published application, an application open to public inspections or an issued patent.

9. A record from this system of records may be disclosed, as a routine use, to a Federal, State, or local law enforcement agency, if the USPTO becomes aware of a violation or potential violation of law or regulation.

PTO/SB/66 (03-09)
Approved for use through 03/31/2012. OMB 0651-0016
U.S. Patent and Trademark Office: U.S. DEPARTMENT OF COMMERCE
Under the Paperwork Reduction Act of 1995, no persons are required to respond to a collection of information unless it displays valid OMB control number.

PETITION TO ACCEPT UNINTENTIONALLY DELAYED PAYMENT OF MAINTENANCE FEE IN AN EXPIRED PATENT (37 CFR 1.378(c))

Patent Number	Issue Date (YYYY-MM-DD)	Application Number	Filing Date (YYYY-MM-DD)	Docket Number (if applicable)
6628715	2003-09-30	09/484,039	2000-01-18	GOGL-380-B

CAUTION: Maintenance fee (and surcharge, if any) payment must correctly identify: (1) the patent number and (2) the application number of the actual U.S. application leading to issuance of that patent to ensure the fee(s) is/are associated with the correct patent. 37 CFR 1.366(c) and (d).

SMALL ENTITY

☐ Patentee claims, or has previously claimed, small entity status. See 37 CFR 1.27.

LOSS OF ENTITLEMENT TO SMALL ENTITY STATUS

☐ Patentee is no longer entitled to small entity status. See 37 CFR 1.27(g)

NOT Small Entity			Small Entity		
	Fee	Code		Fee	Code
○	3 ½ year	(1551)	○	3 ½ year	(2551)
◉	7 ½ year	(1552)	○	7 ½ year	(2552)
○	11 ½ year	(1553)	○	11 ½ year	(2553)

SURCHARGE

The surcharge required by 37 CFR 1.20(i)(2) (Fee Code 1558) must be paid as a condition of accepting unintentionally delayed payment of the maintenance fee.

MAINTENANCE FEE (37 CFR 1.20(e)-(g))

The appropriate maintenance fee must be submitted with this petition.

STATEMENT

THE UNDERSIGNED CERTIFIES THAT THE DELAY IN PAYMENT OF THE MAINTENANCE FEE TO THIS PATENT WAS UNINTENTIONAL

PETITIONER(S) REQUEST THAT THE DELAYED PAYMENT OF THE MAINTENANCE FEE BE ACCEPTED AND THE PATENT REINSTATED

THIS PORTION MUST BE COMPLETED BY THE SIGNATORY OR SIGNATORIES

37 CFR 1.378(d) states: "Any petition under this section must be signed by an attorney or agent registered to practice before the Patent and Trademark Office, or by the patentee, the assignee, or other party in interest."

I certify, in accordance with 37 CFR 1.4(d)(4) that I am

◉ An attorney or agent registered to practice before the Patent and Trademark Office

○ A sole patentee

○ A joint patentee; I certify that I am authorized to sign this submission on behalf of all the other patentees.

○ A joint patentee; all of whom are signing this e-petition

○ The assignee of record of the entire interest

PTO/SB/66 (03-09)
Approved for use through 03/31/2012. OMB 0651-0016
U.S. Patent and Trademark Office: U.S. DEPARTMENT OF COMMERCE
Under the Paperwork Reduction Act of 1995, no persons are required to respond to a collection of information unless it displays valid OMB control number.

Patent Practitioner			
A signature of the applicant or representative is required in accordance with 37 CFR 1.33 and 10.18. Please see 37 CFR 1.4(d) for the form of the signature			
Signature	/Andrew R. Basile, Jr./	Date (YYYY-MM-DD)	2011-12-22
Name	Andrew R. Basile, Jr.	Registration Number	35438

This collection of information is required by 37 CFR 1.378(c). The information is required to obtain or retain a benefit by the public which is to file (and by the USPTO to process) an application. Confidentiality is governed by 35 U.S.C. 122 and 37 CFR 1.11 and 1.14. This collection is estimated to take 1 hour to complete, including gathering, preparing, and submitting the completed application form to the USPTO. Time will vary depending upon the individual case. Any comments on the amount of time you require to complete this form and/ or suggestions for reducing this burden, should be sent to the Chief Information Officer, U.S. Patent and Trademark Office, U.S. Department of Commerce, P.O. Box 1450, Alexandria, VA 22313-1450. DO NOT SEND FEES OR COMPLETED FORMS TO THIS ADDRESS. **This form can only be used when in conjunction with EFS-Web. If this form is mailed to the USPTO, it may cause delays in reinstating the patent.**

Privacy Act Statement

The Privacy Act of 1974 (P.L. 93-579) requires that you be given certain information in connection with your submission of the attached form related to a patent application or patent. Accordingly, pursuant to the requirements of the Act, please be advised that: (1) the general authority for the collection of this information is 35 U.S.C. 2(b)(2); (2) furnishing of the information solicited is voluntary; and (3) the principal purpose for which the information is used by the U.S. Patent and Trademark Office is to process and/or examine your submission related to a patent application or patent. If you do not furnish the requested information, the U.S. Patent and Trademark Office may not be able to process and/or examine your submission, which may result in termination of proceedings or abandonment of the application or expiration of the patent.

The information provided by you in this form will be subject to the following routine uses:

1. The information on this form will be treated confidentially to the extent allowed under the Freedom of Information Act (5 U.S.C. 552) and the Privacy Act (5 U.S.C. 552a). Records from this system of records may be disclosed to the Department of Justice to determine whether the Freedom of Information Act requires disclosure of these records.

2. A record from this system of records may be disclosed, as a routine use, in the course of presenting evidence to a court, magistrate, or administrative tribunal, including disclosures to opposing counsel in the course of settlement negotiations.

3. A record in this system of records may be disclosed, as a routine use, to a Member of Congress submitting a request involving an individual, to whom the record pertains, when the individual has requested assistance from the Member with respect to the subject matter of the record.

4. A record in this system of records may be disclosed, as a routine use, to a contractor of the Agency having need for the information in order to perform a contract. Recipients of information shall be required to comply with the requirements of the Privacy Act of 1974, as amended, pursuant to 5 U.S.C. 552a(m).

5. A record related to an International Application filed under the Patent Cooperation Treaty in this system of records may be disclosed, as a routine use, to the International Bureau of the World Intellectual Property Organization, pursuant to the Patent Cooperation Treaty.

6. A record in this system of records may be disclosed, as a routine use, to another federal agency for purposes of National Security review (35 U.S.C. 181) and for review pursuant to the Atomic Energy Act (42 U.S.C. 218(c)).

7. A record from this system of records may be disclosed, as a routine use, to the Administrator, General Services, or his/her designee, during an inspection of records conducted by GSA as part of that agency's responsibility to recommend improvements in records management practices and programs, under authority of 44 U.S.C. 2904 and 2906. Such disclosure shall be made in accordance with the GSA regulations governing inspection of records for this purpose, and any other relevant (i.e., GSA or Commerce) directive. Such disclosure shall not be used to make determinations about individuals.

8. A record from this system of records may be disclosed, as a routine use, to the public after either publication of the application pursuant to 35 U.S.C. 122(b) or issuance of a patent pursuant to 35 U.S.C. 151. Further, a record may be disclosed, subject to the limitations of 37 CFR 1.14, as a routine use, to the public if the record was filed in an application which became abandoned or in which the proceedings were terminated and which application is referenced by either a published application, an application open to public inspections or an issued patent.

9. A record from this system of records may be disclosed, as a routine use, to a Federal, State, or local law enforcement agency, if the USPTO becomes aware of a violation or potential violation of law or regulation.

UNITED STATES PATENT AND TRADEMARK OFFICE

Commissioner for Patents
United States Patent and Trademark Office
P.O. Box 1450
Alexandria, VA 22313-1450
www.uspto.gov

In re Patent No. 6628715
Issue Date: September 30,2003
Application No. 09484039
Filed: January 18,2000
Attorney Docket No. 1999-24

:
:DECISION GRANTING PETITION
:UNDER 37 CFR 1.378(c)
:

This is a decision on the electronic petition, filed December 22,2011 ,under 37 CFR 1.378(c) to accept the unintentionally delayed payment of the 7.5 year maintenance fee for the above-identified patent.

The petition is **GRANTED**.

The maintenance fee is accepted, and the above-identified patent reinstated as of December 22,2011 . This decision also constitutes notice that the fee has been accepted. An electronic copy of the petition and this decision has been created as an entry in the Image File Wrapper. Nevertheless, petitioner should print and retain an independent copy.

Telephone inquiries related to this electronic decision should be directed to the Electronic Business Center at 1-866-217-9197.

UNITED STATES PATENT AND TRADEMARK OFFICE

Commissioner for Patents
United States Patent and Trademark Office
P.O. Box 1450
Alexandria, VA 22313-1450
www.uspto.gov

FINNEGAN, HENDERSON, FARABOW,
GARRETT & DUNNER
LLP
901 NEW YORK AVENUE, NW
WASHINGTON DC 20001-4413

MAILED

AUG 15 2011

OFFICE OF PETITIONS

In re Application of:	:
Charles R. Slater	: ON APPLICATION FOR
Application No. 09/484247	: PATENT TERM ADJUSTMENT
Filing or 371(c) Date: 01/18/2000	:
Atty. Docket No.:	:
6530.0008-03	:

This letter is in response to the "PETITION FOR PATENT TERM ADJUSTMENT DUE TO EXAMINATION DELAY UNDER 37 C.F.R. § 1.181," filed July 26, 2011. Applicants submit that the correct patent term adjustment should be 141 days, not 79 days as calculated by the Office as of the mailing of the initial determination of patent term adjustment. Applicant requests this correction based upon an assertion that the Office erred in calculating an adjustment of 79 days pursuant to 37 CFR 1.702(c). The Application for Patent Term Adjustment is properly treated under 37 C.F.R. § 1.705(b).

The application for patent term adjustment is **GRANTED**.

The Office has updated the PALM and PAIR screens to reflect that the Patent Term Adjustment (PTA) determination at the time of the mailing of the Notice of Allowance is one hundred forty **(141)** days. A copy of the updated PALM screen, showing the correct determination, is enclosed.

On July 13, 2011, the Office mailed the Determination of Patent Term Adjustment under 35 U.S.C. 154(b) in the above-identified application. The Notice stated that the patent term adjustment (PTA) to date is 79 days.

On July 26, 2011, applicant timely submitted the present application for patent term adjustment[1]. Applicants dispute the period of adjustment of 79 days pursuant to 37 CFR 1.702(c) in connection with the interference, declared on September 21, 2010, and decided on December 8,

[1] Office records show that the present petition precedes payment of the Issue Fee, due on October 13, 2011.

2010. Applicants provide that pursuant to 37 CFR 41.205, an interference is considered terminated when no appeal (35 U.S.C. 141) or other review (35 U.S.C. 146) has been or can be taken or had, and that the time for appealing an interference decision under either 35 U.S.C. 141 or 146 as defined in 37 C.F.R. 1.304 is two (2) months from the date of final decision of the Board. Accordingly, Applicants aver that the period of adjustment pursuant to 37 CFR 1.703(c) includes the two (2) month period, from December 9, 2010, to February 10, 2011.

Applicant's arguments have been carefully considered. A review of the record confirms that an interference was declared on September 21, 2010, and terminated by the Board on December 10, 2010. Pursuant to 37 CFR 1.703(c), the period of adjustment beginning on the date an interference was declared, September 21, 2010, and ending on the date that the interference was terminated with respect to the application, February 10, 2011, or 141 days.

In view thereof, the correct Patent Term Adjustment at the time of the mailing of the Notice of Allowance is one hundred forty-one (141) days, subject to any terminal disclaimer.

The Office acknowledges submission of the $200.00 fee set forth in 37 CFR 1.18(e). No additional fees are required.

The application is being forwarded to the Publications Division for issuance of a patent. The patent term adjustment indicated on the patent (as shown on the Issue Notification mailed about three weeks prior to patent issuance) will include any additional adjustment accrued both for Office delay in issuing the patent more than four months after payment of the issue fee and satisfaction of all outstanding requirements, and for the Office taking in excess of three years to issue the patent (to the extent that the three-year period does not overlap with periods already accorded).

Telephone inquiries specific to this matter should be directed to the undersigned at (571) 272-3232.

/DLW/

Derek L. Woods
Attorney
Office of Petitions

Enclosure: Copy of Adjustment PAIR Calculations

PTA/PTE Information | Patent Term Adjustment | Patent Term Extension

Application Number*: 09484247 Search | Explanation of PTA Calculation | Explanation of PTE Calculation

PTE Calculations for Application: 09484247

Application Filing Date	01/18/2000	OverLapping Days Between (A and B) or (A and C)	0
Issue Date of Patent		Non-Overlapping USPTO Delays:	79
A Delays	0	PTO Manual Adjustment	62
B Delays	0	Applicant Delay (APPL)	0
C Delays	0	Total PTE (days)	141

* - Sorted Column

File Contents History

Action Number	Action Recorded Date	Action Due Date	Action Code	Action Description	Duration PTO	Duration APPL	Parent Action Number
62	08/12/2011		P028	Adjustment of PTA Calculation by PTO	62		0
59	07/13/2011		MN/=.	Mail Notice of Allowance	0		0
58	07/12/2011		OAR	Office Action Review	0		0
56	07/12/2011		DVER	Document Verification	0		0
55	07/12/2011		N/=.	Notice of Allowance Data Verification Completed	0		0
57	07/11/2011		IREV	Issue Revision Completed	0		0
54	07/11/2011		CNTA	Allowability Notice	0		0
46	06/30/2011		ABN9	Disposal for a RCE / CPA / R129	0		0
49	06/24/2011		IDSC	Information Disclosure Statement considered	0		0
48	06/24/2011		M844	Information Disclosure Statement (IDS) Filed	0		0
47	06/24/2011		RCEX	Request for Continued Examination (RCE)	0		0
45	06/24/2011		DRWF	Workflow - Drawings Finished	0		0
44	06/24/2011		WIDS	Information Disclosure Statement (IDS) Filed	0		0
43	06/24/2011		BRCE	Workflow - Request for RCE - Begin	0		0
42	04/26/2011		FIDC	Finished Initial Data Capture	0		0
41	04/21/2011		TCPB	Printer Rush- No mailing	0		0
40	04/19/2011		PUBTC	Pubs Case Remand to TC	0		0
39	04/12/2011		EIDC	Export to Initial Data Capture	0		0
38	04/07/2011		MEX.A	Mail Examiner's Amendment	0		0
37	04/07/2011		MN/=.	Mail Notice of Allowance	0		0
36	04/06/2011		IREV	Issue Revision Completed	0		0
35	04/06/2011		DVER	Document Verification	0		0
34	04/06/2011		N/=.	Notice of Allowance Data Verification Completed	0		0
33	04/06/2011		EX.A	Examiner's Amendment Communication	0		0
32	04/06/2011		CNTA	Allowability Notice	0		0
28	03/23/2011		IDTC	Interference dispatch to TC	0		0
27	12/09/2010		MID/F	Mail Interference Decision - Favorable	0		0
26	12/08/2010	09/21/2010	ID/F	Interference Decision on Priority - Favorable	79		25
25	09/21/2010		I.D.	Declaration of Interference	0		0
23	08/30/2010		CTID	Interference Initial Memo Disposal	0		0
22	04/09/2003		FWDX	Date Forwarded to Examiner	0		0
21	04/09/2003		EOSP	to Close the A/R Record and Reset the Status for Expired Suspensions.	0		0
20	10/08/2002		ML.SP	Mail Letter of Suspension	0		0
19	10/07/2002		L.SP	Suspension - Examiner Initiated	0		0
17	12/28/2001		FWDX	Date Forwarded to Examiner	0		0
16	12/26/2001		A...	Response after Non-Final Action	0		0
15	12/18/2001		2092	FAOM Flag Change	0		0
14	12/01/2001		MCTMS	Mail Miscellaneous Communication to Applicant	0		0
13	11/19/2001		CTMS	Miscellaneous Action with SSP	0		0
12	09/18/2001		EXIN	Examiner Interview Summary Record (PTOL - 413)	0		0
0	06/12/2001		DUMMY	Dummy Standard Action - DO Not DELETE	0		0
9	09/16/2000		DOCK	Case Docketed to Examiner in GAU	0		0
8	07/19/2000		OIPE	Application Dispatched from OIPE	0		0
7	07/18/2000		COMP	Application Is Now Complete	0		0
6	07/18/2000		C.AD	Correspondence Address Change	0		0
18	07/11/2000		FLFEE	Payment of additional filing fee/Preexam	0		0
5	03/03/2000		INCD	Notice Mailed--Application Incomplete--Filing Date Assigned	0		0
4	03/03/2000		C.AD	Correspondence Address Change	0		0
3	02/17/2000		SCAN	IFW Scan & PACR Auto Security Review	0		0
2	02/17/2000		G050	Preexamination Location Change	0		0
1	01/21/2000		IEXX	Initial Exam Team nn	0		0
11	01/18/2000		A.PE	Preliminary Amendment	0		0
10	01/18/2000		A.PE	Preliminary Amendment	0		0

Export to: Excel

UNITED STATES PATENT AND TRADEMARK OFFICE

Commissioner for Patents
United States Patent and Trademark Office
P.O. Box 1450
Alexandria, VA 22313-1450
www.uspto.gov

FINNEGAN, HENDERSON, FARABOW,
GARRETT & DUNNER LLP
901 NEW YORK AVENUE, NW
WASHINGTON DC 20001-4413

MAILED
AUG 30 2011
OFFICE OF PETITIONS

In re Application of:	:
Charles R. Slater	: ON PETITION
Application No. 09/484247	:
Filing or 371(c) Date: 01/18/2000	:
Atty. Docket No.:	:
6530.0008-03	:

This letter is in response to the "PETITION FOR PATENT TERM ADJUSTMENT DUE TO EXAMINATION DELAY UNDER 37 C.F.R. § 1.181," filed July 26, 2011. Applicants submit that the correct patent term adjustment should be 141 days, not 79 days as calculated by the Office as of the mailing of the initial determination of patent term adjustment. Applicant requests this correction based upon an assertion that the Office erred in calculating an adjustment of 79 days pursuant to 37 CFR 1.702(c).

The Office notes that the decision of August 15, 2011, treated the present petition under 37 CFR 1.705(b). However, the present application was filed on January 18, 2000. The applicable rule, 37 CFR § 1.701, Extension of patent term due to examination delay under the Uruguay Round Agreements Act, applies to original applications, other than designs, filed on or after June 8, 1995, and before May 29, 2000. The present petition, therefore, is appropriately addressed pursuant to 37 CFR 1.701.

Accordingly, the decision of August 15, 2011, is **vacated**.

The application file is being referred to the Office of Patent Legal Administration for a Decision on the petition for patent term extension.

Telephone inquiries specific to this matter should be directed to the undersigned at (571) 272-3232.

/DLW/

Derek L. Woods
Attorney
Office of Petitions

Enclosure: Copy of Adjustment PAIR Calculations

PTA/PTE Information | Patent Term Adjustment | Patent Term Extension

Application Number*: 09484247 Search Explanation of PTA Calculation Explanation of PTE Calculation

PTE Calculations for Application: 09484247

Application Filing Date	01/18/2000	OverLapping Days Between (A and B) or (A and C)	0
Issue Date of Patent		Non-Overlapping USPTO Delays:	79
A Delays	0	PTO Manual Adjustment	0
B Delays	0	Applicant Delay (APPL)	0
C Delays	0	Total PTE (days)	79

* - Sorted Column

File Contents History

Action Number	Action Recorded Date	Action Due Date	Action Code	Action Description	Duration PTO	Duration APPL	Parent Action Number
65	08/29/2011		P028	Adjustment of PTA Calculation by PTO		62	0
63	08/15/2011		P025	Record a Petition Decision of Granted for Patent Term Adjustment after Allowance			0
62	08/12/2011		P028	Adjustment of PTA Calculation by PTO	62		0
59	07/13/2011		MN/=.	Mail Notice of Allowance	0		0
58	07/12/2011		OAR	Office Action Review	0		0
56	07/12/2011		DVER	Document Verification	0		0
55	07/12/2011		N/=.	Notice of Allowance Data Verification Completed	0		0
57	07/11/2011		IREV	Issue Revision Completed	0		0
54	07/11/2011		CNTA	Allowability Notice	0		0
46	06/30/2011		ABN9	Disposal for a RCE / CPA / R129	0		0
49	06/24/2011		IDSC	Information Disclosure Statement considered	0		0
48	06/24/2011		M844	Information Disclosure Statement (IDS) Filed	0		0
47	06/24/2011		RCEX	Request for Continued Examination (RCE)	0		0
45	06/24/2011		DRWF	Workflow - Drawings Finished	0		0
44	06/24/2011		WIDS	Information Disclosure Statement (IDS) Filed	0		0
43	06/24/2011		BRCE	Workflow - Request for RCE - Begin	0		0
42	04/26/2011		FIDC	Finished Initial Data Capture	0		0
41	04/21/2011		TCPB	Printer Rush- No mailing	0		0
40	04/19/2011		PUBTC	Pubs Case Remand to TC	0		0
39	04/12/2011		EIDC	Export to Initial Data Capture	0		0
38	04/07/2011		MEX.A	Mail Examiner's Amendment	0		0
37	04/07/2011		MN/=.	Mail Notice of Allowance	0		0
36	04/06/2011		IREV	Issue Revision Completed	0		0
35	04/06/2011		DVER	Document Verification	0		0
34	04/06/2011		N/=.	Notice of Allowance Data Verification Completed	0		0
33	04/06/2011		EX.A	Examiner's Amendment Communication	0		0
32	04/06/2011		CNTA	Allowability Notice	0		0
28	03/23/2011		IDTC	Interference dispatch to TC	0		0
27	12/09/2010		MID/F	Mail Interference Decision - Favorable	0		0
26	12/08/2010	09/21/2010	ID/F	Interference Decision on Priority - Favorable	79		25
25	09/21/2010		I.D.	Declaration of Interference	0		0
23	08/30/2010		CTID	Interference Initial Memo Disposal	0		0
22	04/09/2003		FWDX	Date Forwarded to Examiner	0		0
21	04/09/2003		EOSP	to Close the A/R Record and Reset the Status for Expired Suspensions.	0		0
20	10/08/2002		ML.SP	Mail Letter of Suspension	0		0
19	10/07/2002		L.SP	Suspension - Examiner Initiated	0		0
17	12/28/2001		FWDX	Date Forwarded to Examiner	0		0
16	12/26/2001		A...	Response after Non-Final Action	0		0
15	12/18/2001		2092	FAOM Flag Change	0		0
14	12/01/2001		MCTMS	Mail Miscellaneous Communication to Applicant	0		0
13	11/19/2001		CTMS	Miscellaneous Action with SSP	0		0
12	09/18/2001		EXIN	Examiner Interview Summary Record (PTOL - 413)	0		0
0	06/12/2001		DUMMY	Dummy Standard Action - DO Not DELETE	0		0
9	09/16/2000		DOCK	Case Docketed to Examiner in GAU	0		0
8	07/19/2000		OIPE	Application Dispatched from OIPE	0		0
7	07/18/2000		COMP	Application Is Now Complete	0		0
6	07/18/2000		C.AD	Correspondence Address Change	0		0
18	07/11/2000		FLFEE	Payment of additional filing fee/Preexam	0		0
5	03/03/2000		INCD	Notice Mailed--Application Incomplete--Filing Date Assigned	0		0
4	03/03/2000		C.AD	Correspondence Address Change	0		0
3	02/17/2000		SCAN	IFW Scan & PACR Auto Security Review	0		0
2	02/17/2000		G050	Preexamination Location Change	0		0
1	01/21/2000		IEXX	Initial Exam Team nn	0		0
11	01/18/2000		A.PE	Preliminary Amendment	0		0
10	01/18/2000		A.PE	Preliminary Amendment	0		0

Export to: Excel

UNITED STATES PATENT AND TRADEMARK OFFICE

Commissioner for Patents
United States Patent and Trademark Office
P.O. Box 1450
Alexandria, VA 22313-1450
www.uspto.gov

FINNEGAN, HENDERSON, FARABOW, GARRETT & DUNNER
LLP
901 NEW YORK AVENUE, NW
WASHINGTON DC 20001-4413

MAILED

FEB 23 2012

OFFICE OF PETITIONS

In re Application of :
Slater :
Application No. 09/484,247 :
Filed: January 18, 2000 : DECISION
U.S. Patent No. 8,062,292 :
Issue Date: November 22, 2011 :
Attorney Docket No. 6530.0008-03 :
For: Bipolar Endoscopic Surgical Scissor Blades and Instrument Incorporating the Same :

The above-identified application has been forwarded to the undersigned for consideration on a petition for patent term extension entitled "Petition for Paten Term Adjustment Due to Examination Delay under 37 CFR 1.181" received on July 26, 2011.

The petition is granted.

The Notice of Allowance and Fee(s) Due mailed on July 13, 2011 improperly stated that the Patent Term Extension is 79 days. The Office electronic records have been corrected to reflect that the patent term extension is 141 days.

The Office proposes to issue a certificate of correction in order to rectify the error regarding the patent term extension information. See 35 U.S.C. 245 and 37 CFR 1.322. A telephone call was placed to Mr. Bookoff to confirm issuance of the certificate of correction.

Petitioner's deposit account has not been charged a petition fee.

Inquiries regarding this communication should be directed to the undersigned at (571) 272-7709.

Mark O. Polutta

Mark Polutta
Senior Legal Advisor
Office of Patent Legal Administration
Office of the Deputy Commissioner
for Patent Examination Policy

UNITED STATES PATENT AND TRADEMARK OFFICE

UNITED STATES DEPARTMENT OF COMMERCE
United States Patent and Trademark Office
Address: COMMISSIONER FOR PATENTS
P.O. Box 1450
Alexandria, Virginia 22313-1450
www.uspto.gov

APPLICATION NO.	FILING DATE	FIRST NAMED INVENTOR	ATTORNEY DOCKET NO.	CONFIRMATION NO.
09/484,886	01/18/2000	Gale E. Smith	674506-2035.2	1236

20999 7590 09/30/2010
FROMMER LAWRENCE & HAUG
745 FIFTH AVENUE- 10TH FL.
NEW YORK, NY 10151

EXAMINER
SRIVASTAVA, KAILASH C

ART UNIT	PAPER NUMBER
1657	

MAIL DATE	DELIVERY MODE
09/30/2010	PAPER

Please find below and/or attached an Office communication concerning this application or proceeding.

The time period for reply, if any, is set in the attached communication.

UNITED STATES PATENT AND TRADEMARK OFFICE

Commissioner for Patents
United States Patent and Trademark Office
P.O. Box 1450
Alexandria, VA 22313-1450
www.uspto.gov

SEP 3 0 2010

FROMMER LAWRENCE & HAUG
745 FIFTH AVENUE- 10TH FL.
NEW YORK NY 10151

In re Application of:	:
Smith et al.	:
Serial No.: 09/484,886	: PETITION DECISION
Filed: January 18, 2000	:
Attorney Docket No.: **674506-2035.2**	:

This is in response to the petition under 37 CFR § 1.181, filed September 17, 2010, requesting that the finality of the Office action of March 12, 2010 be withdrawn.

It is noted that applicants filed this petition under 37 CFR § 1.181 on September 17, 2010 requesting relief from the finality of the Office action mailed March 12, 2010. This petition was not filed within two months from the mailing of the final Office action and is thus untimely. Nevertheless, a decision on this petition is rendered herein.

BACKGROUND

The examiner mailed a non-final Office action on June 22, 2009 setting a three month statutory limit for reply. At the time of this non-final Office action, claims 96-116 and 127-131 were pending. The examiner rejected claims 69-97, 99-116 and 130 under 35 USC 102 (b) as anticipated by Quelle et al. with evidence provided by Dorland's Illustrated Medical Dictionary.

In reply to the non-final Office action of June 22, 2009, applicants filed a response on December 16, 2009. The response submitted by applicants included remarks, arguments traversing the rejections made in the non-final Office action and cancellation of claims 1-131 and the introduction of new claims 132-152.

On March 12, 2010, the examiner mailed a final Office action setting a three month statutory limit for reply. At the time of this final Office action, claims 132-152 were pending, and claims 132-152 were rejected. Claims 133-138 were rejected under 35 USC 112, first paragraph, as non-enabling. Claims 133-138 were rejected under 35 USC 112, first paragraph, as failing to

comply with the written description requirement. Claims 132-152 were rejected under 35 USC 112, second paragraph, as indefinite. The examiner rejected claims 132-138 and 151 under 35 USC 103 (a) as obvious over Quelle et al. in view of Dorland's Illustrated Medical Dictionary, and further in view of Inlow et al. Claims 139-150 were rejected under 35 USC 103 (a) as obvious over the combined teachings of Quelle et al. in view of Dorland's Illustrated Medical Dictionary, and further in view of Inlow et al. as applied to claims 132-138 and 151 and further in view of Morrison. Claims 152 was rejected under 35 USC 103 (a) as obvious over the combined teachings Quelle et al. in view of Dorland's Illustrated Medical Dictionary and Inlow et al. in view of Morrison as applied to claims 132-151 and further and additionally in view of Smith et al.

In response thereto, applicants filed this petition on September 17, 2010, requesting that the finality of the Office action of March 12, 2010 be withdrawn.

DISCUSSION

The petition and the file history have been carefully considered.

In the petition filed by applicants on September 17, 2010, applicants submit that the finality of the Office action of March 12, 2010 is premature. Applicants argue that "In the Office Action dated March 12, 2010, the Examiner rejected claims 132-152 under 35 U.S.C. § 112. Applicants respectfully submit that the new rejections were not necessitated by amendment of the previous response. In particular, the 35 U.S.C. § 112, first paragraph, rejection relates to EPO having an *in vitro* activity of at least 200,000 U/mg protein and 500,000 U/mg protein. Such a recitation was made in claims presented in an amendment filed March 25, 2009. Therefore, the new rejections were not necessitated by the amendment of the previous response as the recitation was present in the claims pending before the non-final office action. The recitations that are the subject of the rejections under 35 U.S.C. § 112 were in the claims pending before the issuance of a non-final office action. Therefore, Applicants are entitled to a first, non-final action on the merits to address these new rejections. Accordingly, based upon the aforementioned reasons, Applicant respectfully requests that the present Final Rejection be withdrawn."

Applicants' argument is well taken and persuasive since applicants' amendments did not necessitate the new rejection. It is pointed out that the language which forms the basis for the 35 USC 112, first paragraph, rejection was clearly present in the claims before the examiner at the time of the non-final Office action of June 22, 2009.

It is pointed out that MPEP § 706.07 recites:

> Under present practice, second or any subsequent actions on the merits shall be final, except where the examiner introduces a new ground of rejection that is neither necessitated by applicant's amendment of the claims nor based on information submitted in an information disclosure statement filed during the period set forth in 37 CFR 1.97(c) with the fee set forth in 37 CFR 1.17(p).
>
> Furthermore, a second or any subsequent action on the merits in any application or patent undergoing reexamination proceedings will not be made final if it includes a rejection, on newly cited art, other than information submitted in an information disclosure statement filed under 37

CFR 1.97(c) with the fee set forth in 37 CFR 1.17(p), of any claim not amended by applicant or patent owner in spite of the fact that other claims may have been amended to require newly cited art.

Thus, it is *not* proper for an office action to be made final when the examiner introduces a new ground of rejection that is neither necessitated by applicant's amendment of the claims nor based on information submitted in an information disclosure statement filed during the period set forth in 37 CFR 1.97(c). Accordingly, it is decided that Applicants' argument is well-taken and found persuasive.

DECISION

The petition is **GRANTED.**

The Office action mailed March 12, 2010 is hereby vacated to the extent that it was made "final" and the Office action is now considered to be a non-final Office action. The after final amendment of August 9, 2010 will also be entered. This application will be returned to the examiner for further action consistent with this decision and to act on the amendment of August 9, 2010.

Should there be any questions about this decision please contact Marianne C. Seidel, by letter addressed to Director, TC 1600, at the address listed above, or by telephone at 571-272-0584 or by facsimile sent to the general Office facsimile number, 571-273-8300.

Jackie Stone
Director, Technology Center 1600

UNITED STATES PATENT AND TRADEMARK OFFICE

Commissioner for Patents
United States Patent and Trademark Office
P.O. Box 1450
Alexandria, VA 22313-1450
www.uspto.gov

In re Patent No. 6856598
Issue Date: February 15,2005
Application No. 09485658
Filed: February 14,2000
Attorney Docket No. 228-009235-U

:
:DECISION GRANTING PETITION
:UNDER 37 CFR 1.378(c)
:

This is a decision on the electronic petition, filed February 10,2011 ,under 37 CFR 1.378(c) to accept the unintentionally delayed payment of the 3.5 year maintenance fee for the above-identified patent.

The petition is **GRANTED**.

The maintenance fee is accepted, and the above-identified patent reinstated as of February 10,2011 . This decision also constitutes notice that the fee has been accepted. An electronic copy of the petition and this decision has been created as an entry in the Image File Wrapper. Nevertheless, petitioner should print and retain an independent copy.

Telephone inquiries related to this electronic decision should be directed to the Electronic Business Center at 1-866-217-9197.

PTO/SB/66 (03-09)
Approved for use through 03/31/2012. OMB 0651-0016
U.S. Patent and Trademark Office: U.S. DEPARTMENT OF COMMERCE
Under the Paperwork Reduction Act of 1995, no persons are required to respond to a collection of information unless it displays valid OMB control number.

PETITION TO ACCEPT UNINTENTIONALLY DELAYED PAYMENT OF MAINTENANCE FEE IN AN EXPIRED PATENT (37 CFR 1.378(c))

Patent Number	Issue Date (YYYY-MM-DD)	Application Number	Filing Date (YYYY-MM-DD)	Docket Number (if applicable)
6856598	2005-02-15	09/485,658	2000-02-14	

CAUTION: Maintenance fee (and surcharge, if any) payment must correctly identify: (1) the patent number and (2) the application number of the actual U.S. application leading to issuance of that patent to ensure the fee(s) is/are associated with the correct patent. 37 CFR 1.366(c) and (d).

SMALL ENTITY

☒ Patentee claims, or has previously claimed, small entity status. See 37 CFR 1.27.

LOSS OF ENTITLEMENT TO SMALL ENTITY STATUS

☐ Patentee is no longer entitled to small entity status. See 37 CFR 1.27(g)

NOT Small Entity			Small Entity		
	Fee	Code		Fee	Code
○	3 ½ year	(1551)	◉	3 ½ year	(2551)
○	7 ½ year	(1552)	○	7 ½ year	(2552)
○	11 ½ year	(1553)	○	11 ½ year	(2553)

SURCHARGE

The surcharge required by 37 CFR 1.20(i)(2) (Fee Code 1558) must be paid as a condition of accepting unintentionally delayed payment of the maintenance fee.

MAINTENANCE FEE (37 CFR 1.20(e)-(g))

The appropriate maintenance fee must be submitted with this petition.

STATEMENT

THE UNDERSIGNED CERTIFIES THAT THE DELAY IN PAYMENT OF THE MAINTENANCE FEE TO THIS PATENT WAS UNINTENTIONAL

PETITIONER(S) REQUEST THAT THE DELAYED PAYMENT OF THE MAINTENANCE FEE BE ACCEPTED AND THE PATENT REINSTATED

THIS PORTION MUST BE COMPLETED BY THE SIGNATORY OR SIGNATORIES

37 CFR 1.378(d) states: "Any petition under this section must be signed by an attorney or agent registered to practice before the Patent and Trademark Office, or by the patentee, the assignee, or other party in interest."

I certify, in accordance with 37 CFR 1.4(d)(4) that I am

◉ An attorney or agent registered to practice before the Patent and Trademark Office

○ A sole patentee

○ A joint patentee; I certify that I am authorized to sign this submission on behalf of all the other patentees.

○ A joint patentee; all of whom are signing this e-petition

○ The assignee of record of the entire interest

PTO/SB/66 (03-09)
Approved for use through 03/31/2012. OMB 0651-0016
U.S. Patent and Trademark Office: U.S. DEPARTMENT OF COMMERCE
Under the Paperwork Reduction Act of 1995, no persons are required to respond to a collection of information unless it displays valid OMB control number.

Patent Practitioner			
A signature of the applicant or representative is required in accordance with 37 CFR 1.33 and 10.18. Please see 37 CFR 1.4(d) for the form of the signature			
Signature	/dws/	Date (YYYY-MM-DD)	2011-02-08
Name	David W. Schmidt	Registration Number	63779

This collection of information is required by 37 CFR 1.378(c). The information is required to obtain or retain a benefit by the public which is to file (and by the USPTO to process) an application. Confidentiality is governed by 35 U.S.C. 122 and 37 CFR 1.11 and 1.14. This collection is estimated to take 1 hour to complete, including gathering, preparing, and submitting the completed application form to the USPTO. Time will vary depending upon the individual case. Any comments on the amount of time you require to complete this form and/ or suggestions for reducing this burden, should be sent to the Chief Information Officer, U.S. Patent and Trademark Office, U.S. Department of Commerce, P.O. Box 1450, Alexandria, VA 22313-1450. DO NOT SEND FEES OR COMPLETED FORMS TO THIS ADDRESS. **This form can only be used when in conjunction with EFS-Web. If this form is mailed to the USPTO, it may cause delays in reinstating the patent.**

Privacy Act Statement

The Privacy Act of 1974 (P.L. 93-579) requires that you be given certain information in connection with your submission of the attached form related to a patent application or patent. Accordingly, pursuant to the requirements of the Act, please be advised that: (1) the general authority for the collection of this information is 35 U.S.C. 2(b)(2); (2) furnishing of the information solicited is voluntary; and (3) the principal purpose for which the information is used by the U.S. Patent and Trademark Office is to process and/or examine your submission related to a patent application or patent. If you do not furnish the requested information, the U.S. Patent and Trademark Office may not be able to process and/or examine your submission, which may result in termination of proceedings or abandonment of the application or expiration of the patent.

The information provided by you in this form will be subject to the following routine uses:

1. The information on this form will be treated confidentially to the extent allowed under the Freedom of Information Act (5 U.S.C. 552) and the Privacy Act (5 U.S.C. 552a). Records from this system of records may be disclosed to the Department of Justice to determine whether the Freedom of Information Act requires disclosure of these records.

2. A record from this system of records may be disclosed, as a routine use, in the course of presenting evidence to a court, magistrate, or administrative tribunal, including disclosures to opposing counsel in the course of settlement negotiations.

3. A record in this system of records may be disclosed, as a routine use, to a Member of Congress submitting a request involving an individual, to whom the record pertains, when the individual has requested assistance from the Member with respect to the subject matter of the record.

4. A record in this system of records may be disclosed, as a routine use, to a contractor of the Agency having need for the information in order to perform a contract. Recipients of information shall be required to comply with the requirements of the Privacy Act of 1974, as amended, pursuant to 5 U.S.C. 552a(m).

5. A record related to an International Application filed under the Patent Cooperation Treaty in this system of records may be disclosed, as a routine use, to the International Bureau of the World Intellectual Property Organization, pursuant to the Patent Cooperation Treaty.

6. A record in this system of records may be disclosed, as a routine use, to another federal agency for purposes of National Security review (35 U.S.C. 181) and for review pursuant to the Atomic Energy Act (42 U.S.C. 218(c)).

7. A record from this system of records may be disclosed, as a routine use, to the Administrator, General Services, or his/her designee, during an inspection of records conducted by GSA as part of that agency's responsibility to recommend improvements in records management practices and programs, under authority of 44 U.S.C. 2904 and 2906. Such disclosure shall be made in accordance with the GSA regulations governing inspection of records for this purpose, and any other relevant (i.e., GSA or Commerce) directive. Such disclosure shall not be used to make determinations about individuals.

8. A record from this system of records may be disclosed, as a routine use, to the public after either publication of the application pursuant to 35 U.S.C. 122(b) or issuance of a patent pursuant to 35 U.S.C. 151. Further, a record may be disclosed, subject to the limitations of 37 CFR 1.14, as a routine use, to the public if the record was filed in an application which became abandoned or in which the proceedings were terminated and which application is referenced by either a published application, an application open to public inspections or an issued patent.

9. A record from this system of records may be disclosed, as a routine use, to a Federal, State, or local law enforcement agency, if the USPTO becomes aware of a violation or potential violation of law or regulation.

UNITED STATES PATENT AND TRADEMARK OFFICE

Commissioner for Patents
United States Patent and Trademark Office
P.O. Box 1450
Alexandria, VA 22313-1450
www.uspto.gov

HANDLEY LAW FIRM, PLLC
ROGER N. CHAUZA, PC
PO BOX 140036
IRVING TX 75014

MAILED
FEB 14 2012
OFFICE OF PETITIONS

In re Patent No. 6,345,233 :
Issue Date : February 5, 2002 :
Application No. 09/485,956 : ON PETITION
Filed: June 16, 2000 :
Attorney Docket No. :

This is a decision on the petition under 37 CFR 1.378(c), filed December 11, 2011, to accept the delayed payment of a maintenance fee for the above-identified patent.

The petition is **DISMISSED**.

A petition to accept the unintentionally delayed payment of a maintenance fee under 35 U.S.C. 41(c) and 37 CFR 1.378(c) must be accompanied by: (1) a statement that the delay was unintentional; (2) payment of the appropriate maintenance fee, unless previously submitted; (3) payment of the surcharge set forth in 37 CFR 1.20(i)(2). This petition lacks items (2) and (3) above.

With respect to items (2) and (3): The Office is unable to charge the maintenance fee and surcharge as indicated in the petition filed December 11, 2011. In this regard, the credit card payment has been declined and the transaction could not be processed. To satisfy the requirement of 37 CFR 1.378(c) the current seven and one half year maintenance fee and surcharge must be submitted. No consideration on the merits can be given until the required fees are remitted.

It is not apparent whether the person signing the statement of unintentional delay was in a position to have firsthand or direct knowledge of the facts and circumstances of the delay at issue. Nevertheless, such statement is being treated as having been made as the result of a reasonable inquiry into the facts and circumstances of such delay. In the event that such an inquiry has not been made, petitioner must make such an inquiry. If such inquiry results in the discovery that the delay in paying the maintenance fee under 37 CFR 1.378(c) was intentional, petitioner must notify the Office.

There is no indication that the person signing the petition was ever given a power of attorney to prosecute the application. If the person signing the petition desires to receive future

correspondence regarding this application, the appropriate power of attorney document must be submitted.

Any petition for reconsideration of this decision must be accompanied by the **petition fee of $400** as set forth in 37 CFR 1.17(f). The petition for reconsideration must include the lacking item(s) noted above , since, after a decision on the petition for reconsideration, no further reconsideration or review of the matter will be undertaken by the Director.

If reconsideration of this decision is desired, a petition for reconsideration under 37 CFR 1.378(e) must be filed within **TWO (2) MONTHS** from the mail date of this decision. No extension of this two-month time limit can be granted under 37 CFR 1.136(a) or (b). This is **not** a final agency action within the meaning of 5 U.S.C. § 704.

Further correspondence with respect to this matter should be addressed as follows:

By Mail:
Mail Stop PETITION
Commissioner for Patents
Post Office Box 1450
Alexandria, VA 22313-1450

By hand:
U. S. Patent and Trademark Office
Customer Service Window, Mail Stop Petitions
Randolph Building
401 Dulany Street
Alexandria, VA 22314

The centralized facsimile number is (571) 273-8300.

Telephone inquiries should be directed to the undersigned at (571) 272-6735.

/Diane Goodwyn/
Diane Goodwyn
Petitions Examiner
Office of Petitions

UNITED STATES PATENT AND TRADEMARK OFFICE

Commissioner for Patents
United States Patent and Trademark Office
P.O. Box 1450
Alexandria, VA 22313-1450
www.uspto.gov

MAILED

NOV 09 2010

OFFICE OF PETITIONS

BARNES & THORNBURG LLP
11 SOUTH MERIDIAN
INDIANAPOLIS IN 46204

In re Application of :
Snyder, et al. :
Application No. 09/486,904 : DECISION ON PETITION
Filed: March 3, 2000 :
Attorney Docket No. 3220-66107 :

This is a decision on the petition to withdraw the holding of abandonment under 37 CFR 1.181, filed June 18, 2004.

The petition is **GRANTED**.

The above-identified application became abandoned for failure to timely file a proper reply to the final Office action mailed September 23, 2003. This Office action set a shortened statutory period for reply of three (3) months. No reply having been received, the application became abandoned on December 24, 2003. The Office mailed a Notice of Abandonment on Maya 25, 2004.

Petitioner argues that he timely filed a Notice of Appeal on December 22, 2003. In support thereof, petitioner has supplied a copy of a USPTO date stamped postcard receipt, identifying this application, showing that a Notice of Appeal was received in the Office on December 22, 2003.

In view thereof, **the holding of abandonment is withdrawn.**

However, petitioner has offered no proof that the fee for the Notice of Appeal was paid. Because the Notice of Appeal included an authorization to charge any necessary fees to counsel's deposit account, the $330 fee (in effect during December of 2003) for the Notice of Appeal has been charged to Deposit Account No. 10-0435, as authorized.

The matter is being forwarded to Group Art Unit 1638 for consideration of the Appeal Brief, filed February 2, 2004.

Telephone inquiries regarding this decision should be directed to the undersigned at (571)272-3207.

Cliff Congo
Petitions Attorney
Office of Petitions

UNITED STATES PATENT AND TRADEMARK OFFICE

Commissioner for Patents
United States Patent and Trademark Office
P.O. Box 1450
Alexandria, VA 22313-1450
www.uspto.gov

In re Patent No. 6526016
Issue Date: February 25,2003
Application No. 09486906
Filed: March 2,2000
Attorney Docket No. 0670-229

:
:DECISION GRANTING PETITION
:UNDER 37 CFR 1.378(c)
:

This is a decision on the electronic petition, filed March 22,2012 ,under 37 CFR 1.378(c) to accept the unintentionally delayed payment of the 7.5 year maintenance fee for the above-identified patent.

The petition is **GRANTED**.

The maintenance fee is accepted, and the above-identified patent reinstated as of March 22,2012 .
This decision also constitutes notice that the fee has been accepted. An electronic copy of the petition and this decision has been created as an entry in the Image File Wrapper. Nevertheless, petitioner should print and retain an independent copy.

Telephone inquiries related to this electronic decision should be directed to the Electronic Business Center at 1-866-217-9197.

PTO/SB/66 (03-09)
Approved for use through 03/31/2012. OMB 0651-0016
U.S. Patent and Trademark Office: U.S. DEPARTMENT OF COMMERCE
Under the Paperwork Reduction Act of 1995, no persons are required to respond to a collection of information unless it displays valid OMB control number.

PETITION TO ACCEPT UNINTENTIONALLY DELAYED PAYMENT OF MAINTENANCE FEE IN AN EXPIRED PATENT (37 CFR 1.378(c))

Patent Number	Issue Date (YYYY-MM-DD)	Application Number	Filing Date (YYYY-MM-DD)	Docket Number (if applicable)
6526016	2003-02-25	09486906	2000-03-02	

CAUTION: Maintenance fee (and surcharge, if any) payment must correctly identify: (1) the patent number and (2) the application number of the actual U.S. application leading to issuance of that patent to ensure the fee(s) is/are associated with the correct patent. 37 CFR 1.366(c) and (d).

SMALL ENTITY

☐ Patentee claims, or has previously claimed, small entity status. See 37 CFR 1.27.

LOSS OF ENTITLEMENT TO SMALL ENTITY STATUS

☐ Patentee is no longer entitled to small entity status. See 37 CFR 1.27(g)

NOT Small Entity			Small Entity		
	Fee	Code		Fee	Code
○	3 ½ year	(1551)	○	3 ½ year	(2551)
◉	7 ½ year	(1552)	○	7 ½ year	(2552)
○	11 ½ year	(1553)	○	11 ½ year	(2553)

SURCHARGE

The surcharge required by 37 CFR 1.20(i)(2) (Fee Code 1558) must be paid as a condition of accepting unintentionally delayed payment of the maintenance fee.

MAINTENANCE FEE (37 CFR 1.20(e)-(g))

The appropriate maintenance fee must be submitted with this petition.

STATEMENT

THE UNDERSIGNED CERTIFIES THAT THE DELAY IN PAYMENT OF THE MAINTENANCE FEE TO THIS PATENT WAS UNINTENTIONAL

PETITIONER(S) REQUEST THAT THE DELAYED PAYMENT OF THE MAINTENANCE FEE BE ACCEPTED AND THE PATENT REINSTATED

THIS PORTION MUST BE COMPLETED BY THE SIGNATORY OR SIGNATORIES

37 CFR 1.378(d) states: "Any petition under this section must be signed by an attorney or agent registered to practice before the Patent and Trademark Office, or by the patentee, the assignee, or other party in interest."

I certify, in accordance with 37 CFR 1.4(d)(4) that I am

◉ An attorney or agent registered to practice before the Patent and Trademark Office

○ A sole patentee

○ A joint patentee; I certify that I am authorized to sign this submission on behalf of all the other patentees.

○ A joint patentee; all of whom are signing this e-petition

○ The assignee of record of the entire interest

PTO/SB/66 (03-09)
Approved for use through 03/31/2012. OMB 0651-0016
U.S. Patent and Trademark Office: U.S. DEPARTMENT OF COMMERCE
Under the Paperwork Reduction Act of 1995, no persons are required to respond to a collection of information unless it displays valid OMB control number.

Patent Practitioner			
A signature of the applicant or representative is required in accordance with 37 CFR 1.33 and 10.18. Please see 37 CFR 1.4(d) for the form of the signature			
Signature	/Marvin Motsenbocker/	Date (YYYY-MM-DD)	2012-03-22
Name	Marvin A. Motsenbocker	Registration Number	36614

This collection of information is required by 37 CFR 1.378(c). The information is required to obtain or retain a benefit by the public which is to file (and by the USPTO to process) an application. Confidentiality is governed by 35 U.S.C. 122 and 37 CFR 1.11 and 1.14. This collection is estimated to take 1 hour to complete, including gathering, preparing, and submitting the completed application form to the USPTO. Time will vary depending upon the individual case. Any comments on the amount of time you require to complete this form and/ or suggestions for reducing this burden, should be sent to the Chief Information Officer, U.S. Patent and Trademark Office, U.S. Department of Commerce, P.O. Box 1450, Alexandria, VA 22313-1450. DO NOT SEND FEES OR COMPLETED FORMS TO THIS ADDRESS. **This form can only be used when in conjunction with EFS-Web. If this form is mailed to the USPTO, it may cause delays in reinstating the patent.**

Privacy Act Statement

The Privacy Act of 1974 (P.L. 93-579) requires that you be given certain information in connection with your submission of the attached form related to a patent application or patent. Accordingly, pursuant to the requirements of the Act, please be advised that: (1) the general authority for the collection of this information is 35 U.S.C. 2(b)(2); (2) furnishing of the information solicited is voluntary; and (3) the principal purpose for which the information is used by the U.S. Patent and Trademark Office is to process and/or examine your submission related to a patent application or patent. If you do not furnish the requested information, the U.S. Patent and Trademark Office may not be able to process and/or examine your submission, which may result in termination of proceedings or abandonment of the application or expiration of the patent.

The information provided by you in this form will be subject to the following routine uses:

1. The information on this form will be treated confidentially to the extent allowed under the Freedom of Information Act (5 U.S.C. 552) and the Privacy Act (5 U.S.C. 552a). Records from this system of records may be disclosed to the Department of Justice to determine whether the Freedom of Information Act requires disclosure of these records.

2. A record from this system of records may be disclosed, as a routine use, in the course of presenting evidence to a court, magistrate, or administrative tribunal, including disclosures to opposing counsel in the course of settlement negotiations.

3. A record in this system of records may be disclosed, as a routine use, to a Member of Congress submitting a request involving an individual, to whom the record pertains, when the individual has requested assistance from the Member with respect to the subject matter of the record.

4. A record in this system of records may be disclosed, as a routine use, to a contractor of the Agency having need for the information in order to perform a contract. Recipients of information shall be required to comply with the requirements of the Privacy Act of 1974, as amended, pursuant to 5 U.S.C. 552a(m).

5. A record related to an International Application filed under the Patent Cooperation Treaty in this system of records may be disclosed, as a routine use, to the International Bureau of the World Intellectual Property Organization, pursuant to the Patent Cooperation Treaty.

6. A record in this system of records may be disclosed, as a routine use, to another federal agency for purposes of National Security review (35 U.S.C. 181) and for review pursuant to the Atomic Energy Act (42 U.S.C. 218(c)).

7. A record from this system of records may be disclosed, as a routine use, to the Administrator, General Services, or his/her designee, during an inspection of records conducted by GSA as part of that agency's responsibility to recommend improvements in records management practices and programs, under authority of 44 U.S.C. 2904 and 2906. Such disclosure shall be made in accordance with the GSA regulations governing inspection of records for this purpose, and any other relevant (i.e., GSA or Commerce) directive. Such disclosure shall not be used to make determinations about individuals.

8. A record from this system of records may be disclosed, as a routine use, to the public after either publication of the application pursuant to 35 U.S.C. 122(b) or issuance of a patent pursuant to 35 U.S.C. 151. Further, a record may be disclosed, subject to the limitations of 37 CFR 1.14, as a routine use, to the public if the record was filed in an application which became abandoned or in which the proceedings were terminated and which application is referenced by either a published application, an application open to public inspections or an issued patent.

9. A record from this system of records may be disclosed, as a routine use, to a Federal, State, or local law enforcement agency, if the USPTO becomes aware of a violation or potential violation of law or regulation.

PTO/SB/66 (03-09)
Approved for use through 03/31/2012. OMB 0651-0016
U.S. Patent and Trademark Office: U.S. DEPARTMENT OF COMMERCE
Under the Paperwork Reduction Act of 1995, no persons are required to respond to a collection of information unless it displays valid OMB control number.

PETITION TO ACCEPT UNINTENTIONALLY DELAYED PAYMENT OF MAINTENANCE FEE IN AN EXPIRED PATENT (37 CFR 1.378(c))

Patent Number	Issue Date (YYYY-MM-DD)	Application Number	Filing Date (YYYY-MM-DD)	Docket Number (if applicable)
7143056	2006-11-28	09487392	2000-01-18	7826.003

CAUTION: Maintenance fee (and surcharge, if any) payment must correctly identify: (1) the patent number and (2) the application number of the actual U.S. application leading to issuance of that patent to ensure the fee(s) is/are associated with the correct patent. 37 CFR 1.366(c) and (d).

SMALL ENTITY

☒ Patentee claims, or has previously claimed, small entity status. See 37 CFR 1.27.

LOSS OF ENTITLEMENT TO SMALL ENTITY STATUS

☐ Patentee is no longer entitled to small entity status. See 37 CFR 1.27(g)

NOT Small Entity			Small Entity		
	Fee	Code		Fee	Code
○	3 ½ year	(1551)	◉	3 ½ year	(2551)
○	7 ½ year	(1552)	○	7 ½ year	(2552)
○	11 ½ year	(1553)	○	11 ½ year	(2553)

SURCHARGE

The surcharge required by 37 CFR 1.20(i)(2) (Fee Code 1558) must be paid as a condition of accepting unintentionally delayed payment of the maintenance fee.

MAINTENANCE FEE (37 CFR 1.20(e)-(g))

The appropriate maintenance fee must be submitted with this petition.

STATEMENT

THE UNDERSIGNED CERTIFIES THAT THE DELAY IN PAYMENT OF THE MAINTENANCE FEE TO THIS PATENT WAS UNINTENTIONAL

PETITIONER(S) REQUEST THAT THE DELAYED PAYMENT OF THE MAINTENANCE FEE BE ACCEPTED AND THE PATENT REINSTATED

THIS PORTION MUST BE COMPLETED BY THE SIGNATORY OR SIGNATORIES

37 CFR 1.378(d) states: "Any petition under this section must be signed by an attorney or agent registered to practice before the Patent and Trademark Office, or by the patentee, the assignee, or other party in interest."

I certify, in accordance with 37 CFR 1.4(d)(4) that I am

◉ An attorney or agent registered to practice before the Patent and Trademark Office

○ A sole patentee

○ A joint patentee; I certify that I am authorized to sign this submission on behalf of all the other patentees.

○ A joint patentee; all of whom are signing this e-petition

○ The assignee of record of the entire interest

PTO/SB/66 (03-09)
Approved for use through 03/31/2012. OMB 0651-0016
U.S. Patent and Trademark Office: U.S. DEPARTMENT OF COMMERCE
Under the Paperwork Reduction Act of 1995, no persons are required to respond to a collection of information unless it displays valid OMB control number.

Patent Practitioner			
A signature of the applicant or representative is required in accordance with 37 CFR 1.33 and 10.18. Please see 37 CFR 1.4(d) for the form of the signature			
Signature	/Charles Hanor/	Date (YYYY-MM-DD)	2011-05-04
Name	Charles Hanor	Registration Number	27132

This collection of information is required by 37 CFR 1.378(c). The information is required to obtain or retain a benefit by the public which is to file (and by the USPTO to process) an application. Confidentiality is governed by 35 U.S.C. 122 and 37 CFR 1.11 and 1.14. This collection is estimated to take 1 hour to complete, including gathering, preparing, and submitting the completed application form to the USPTO. Time will vary depending upon the individual case. Any comments on the amount of time you require to complete this form and/ or suggestions for reducing this burden, should be sent to the Chief Information Officer, U.S. Patent and Trademark Office, U.S. Department of Commerce, P.O. Box 1450, Alexandria, VA 22313-1450. DO NOT SEND FEES OR COMPLETED FORMS TO THIS ADDRESS. **This form can only be used when in conjunction with EFS-Web. If this form is mailed to the USPTO, it may cause delays in reinstating the patent.**

Privacy Act Statement

The Privacy Act of 1974 (P.L. 93-579) requires that you be given certain information in connection with your submission of the attached form related to a patent application or patent. Accordingly, pursuant to the requirements of the Act, please be advised that: (1) the general authority for the collection of this information is 35 U.S.C. 2(b)(2); (2) furnishing of the information solicited is voluntary; and (3) the principal purpose for which the information is used by the U.S. Patent and Trademark Office is to process and/or examine your submission related to a patent application or patent. If you do not furnish the requested information, the U.S. Patent and Trademark Office may not be able to process and/or examine your submission, which may result in termination of proceedings or abandonment of the application or expiration of the patent.

The information provided by you in this form will be subject to the following routine uses:

1. The information on this form will be treated confidentially to the extent allowed under the Freedom of Information Act (5 U.S.C. 552) and the Privacy Act (5 U.S.C. 552a). Records from this system of records may be disclosed to the Department of Justice to determine whether the Freedom of Information Act requires disclosure of these records.

2. A record from this system of records may be disclosed, as a routine use, in the course of presenting evidence to a court, magistrate, or administrative tribunal, including disclosures to opposing counsel in the course of settlement negotiations.

3. A record in this system of records may be disclosed, as a routine use, to a Member of Congress submitting a request involving an individual, to whom the record pertains, when the individual has requested assistance from the Member with respect to the subject matter of the record.

4. A record in this system of records may be disclosed, as a routine use, to a contractor of the Agency having need for the information in order to perform a contract. Recipients of information shall be required to comply with the requirements of the Privacy Act of 1974, as amended, pursuant to 5 U.S.C. 552a(m).

5. A record related to an International Application filed under the Patent Cooperation Treaty in this system of records may be disclosed, as a routine use, to the International Bureau of the World Intellectual Property Organization, pursuant to the Patent Cooperation Treaty.

6. A record in this system of records may be disclosed, as a routine use, to another federal agency for purposes of National Security review (35 U.S.C. 181) and for review pursuant to the Atomic Energy Act (42 U.S.C. 218(c)).

7. A record from this system of records may be disclosed, as a routine use, to the Administrator, General Services, or his/her designee, during an inspection of records conducted by GSA as part of that agency's responsibility to recommend improvements in records management practices and programs, under authority of 44 U.S.C. 2904 and 2906. Such disclosure shall be made in accordance with the GSA regulations governing inspection of records for this purpose, and any other relevant (i.e., GSA or Commerce) directive. Such disclosure shall not be used to make determinations about individuals.

8. A record from this system of records may be disclosed, as a routine use, to the public after either publication of the application pursuant to 35 U.S.C. 122(b) or issuance of a patent pursuant to 35 U.S.C. 151. Further, a record may be disclosed, subject to the limitations of 37 CFR 1.14, as a routine use, to the public if the record was filed in an application which became abandoned or in which the proceedings were terminated and which application is referenced by either a published application, an application open to public inspections or an issued patent.

9. A record from this system of records may be disclosed, as a routine use, to a Federal, State, or local law enforcement agency, if the USPTO becomes aware of a violation or potential violation of law or regulation.

UNITED STATES PATENT AND TRADEMARK OFFICE

Commissioner for Patents
United States Patent and Trademark Office
P.O. Box 1450
Alexandria, VA 22313-1450
www.uspto.gov

In re Patent No. 7143056
Issue Date: November 28,2006
Application No. 09487392
Filed: January 18,2000
Attorney Docket No. 1036.1140

:
:DECISION GRANTING PETITION
:UNDER 37 CFR 1.378(c)
:

This is a decision on the electronic petition, filed May 5,2011 ,under 37 CFR 1.378(c) to accept the unintentionally delayed payment of the 3.5 year maintenance fee for the above-identified patent.

The petition is **GRANTED**.

The maintenance fee is accepted, and the above-identified patent reinstated as of May 5,2011 .
This decision also constitutes notice that the fee has been accepted. An electronic copy of the petition and this decision has been created as an entry in the Image File Wrapper. Nevertheless, petitioner should print and retain an independent copy.

Telephone inquiries related to this electronic decision should be directed to the Electronic Business Center at 1-866-217-9197.

UNITED STATES PATENT AND TRADEMARK OFFICE

Commissioner for Patents
United States Patent and Trademark Office
P.O. Box 1450
Alexandria, VA 22313-1450
www.uspto.gov

In re Patent No. 6277227
Issue Date: August 21,2001
Application No. 09488197
Filed: January 19,2000
Attorney Docket No. JMI-0104-PUS

:
:DECISION GRANTING PETITION
:UNDER 37 CFR 1.378(c)
:

This is a decision on the electronic petition, filed August 23,2010 ,under 37 CFR 1.378(c) to accept the unintentionally delayed payment of the 7.5 year maintenance fee for the above-identified patent.

The petition is **GRANTED**.

The maintenance fee is accepted, and the above-identified patent reinstated as of August 23,2010 . This decision also constitutes notice that the fee has been accepted. An electronic copy of the petition and this decision has been created as an entry in the Image File Wrapper. Nevertheless, petitioner should print and retain an independent copy.

Telephone inquiries related to this electronic decision should be directed to the Electronic Business Center at 1-866-217-9197.

PTO/SB/66 (03-09)
Approved for use through 03/31/2012. OMB 0651-0016
U.S. Patent and Trademark Office: U.S. DEPARTMENT OF COMMERCE
Under the Paperwork Reduction Act of 1995, no persons are required to respond to a collection of information unless it displays valid OMB control number.

PETITION TO ACCEPT UNINTENTIONALLY DELAYED PAYMENT OF MAINTENANCE FEE IN AN EXPIRED PATENT (37 CFR 1.378(c))

Patent Number	Issue Date (YYYY-MM-DD)	Application Number	Filing Date (YYYY-MM-DD)	Docket Number (if applicable)
6277227	2001-08-21	09488197	2000-01-19	JMI 0104 PUS

CAUTION: Maintenance fee (and surcharge, if any) payment must correctly identify: (1) the patent number and (2) the application number of the actual U.S. application leading to issuance of that patent to ensure the fee(s) is/are associated with the correct patent. 37 CFR 1.366(c) and (d).

SMALL ENTITY

☒ Patentee claims, or has previously claimed, small entity status. See 37 CFR 1.27.

LOSS OF ENTITLEMENT TO SMALL ENTITY STATUS

☐ Patentee is no longer entitled to small entity status. See 37 CFR 1.27(g)

NOT Small Entity	Fee	Code	Small Entity	Fee	Code
○	3 ½ year	(1551)	○	3 ½ year	(2551)
○	7 ½ year	(1552)	◉	7 ½ year	(2552)
○	11 ½ year	(1553)	○	11 ½ year	(2553)

SURCHARGE

The surcharge required by 37 CFR 1.20(i)(2) (Fee Code 1558) must be paid as a condition of accepting unintentionally delayed payment of the maintenance fee.

MAINTENANCE FEE (37 CFR 1.20(e)-(g))

The appropriate maintenance fee must be submitted with this petition.

STATEMENT

THE UNDERSIGNED CERTIFIES THAT THE DELAY IN PAYMENT OF THE MAINTENANCE FEE TO THIS PATENT WAS UNINTENTIONAL

PETITIONER(S) REQUEST THAT THE DELAYED PAYMENT OF THE MAINTENANCE FEE BE ACCEPTED AND THE PATENT REINSTATED

THIS PORTION MUST BE COMPLETED BY THE SIGNATORY OR SIGNATORIES

37 CFR 1.378(d) states: "Any petition under this section must be signed by an attorney or agent registered to practice before the Patent and Trademark Office, or by the patentee, the assignee, or other party in interest."

I certify, in accordance with 37 CFR 1.4(d)(4) that I am

◉ An attorney or agent registered to practice before the Patent and Trademark Office

○ A sole patentee

○ A joint patentee; I certify that I am authorized to sign this submission on behalf of all the other patentees.

○ A joint patentee; all of whom are signing this e-petition

○ The assignee of record of the entire interest

PTO/SB/66 (03-09)
Approved for use through 03/31/2012. OMB 0651-0016
U.S. Patent and Trademark Office: U.S. DEPARTMENT OF COMMERCE
Under the Paperwork Reduction Act of 1995, no persons are required to respond to a collection of information unless it displays valid OMB control number.

Patent Practitioner			
A signature of the applicant or representative is required in accordance with 37 CFR 1.33 and 10.18. Please see 37 CFR 1.4(d) for the form of the signature			
Signature	/John E. Nemazi/	Date (YYYY-MM-DD)	2010-08-20
Name	John E. Nemazi	Registration Number	30876

This collection of information is required by 37 CFR 1.378(c). The information is required to obtain or retain a benefit by the public which is to file (and by the USPTO to process) an application. Confidentiality is governed by 35 U.S.C. 122 and 37 CFR 1.11 and 1.14. This collection is estimated to take 1 hour to complete, including gathering, preparing, and submitting the completed application form to the USPTO. Time will vary depending upon the individual case. Any comments on the amount of time you require to complete this form and/ or suggestions for reducing this burden, should be sent to the Chief Information Officer, U.S. Patent and Trademark Office, U.S. Department of Commerce, P.O. Box 1450, Alexandria, VA 22313-1450. DO NOT SEND FEES OR COMPLETED FORMS TO THIS ADDRESS. **This form can only be used when in conjunction with EFS-Web. If this form is mailed to the USPTO, it may cause delays in reinstating the patent.**

Privacy Act Statement

The Privacy Act of 1974 (P.L. 93-579) requires that you be given certain information in connection with your submission of the attached form related to a patent application or patent. Accordingly, pursuant to the requirements of the Act, please be advised that: (1) the general authority for the collection of this information is 35 U.S.C. 2(b)(2); (2) furnishing of the information solicited is voluntary; and (3) the principal purpose for which the information is used by the U.S. Patent and Trademark Office is to process and/or examine your submission related to a patent application or patent. If you do not furnish the requested information, the U.S. Patent and Trademark Office may not be able to process and/or examine your submission, which may result in termination of proceedings or abandonment of the application or expiration of the patent.

The information provided by you in this form will be subject to the following routine uses:

1. The information on this form will be treated confidentially to the extent allowed under the Freedom of Information Act (5 U.S.C. 552) and the Privacy Act (5 U.S.C. 552a). Records from this system of records may be disclosed to the Department of Justice to determine whether the Freedom of Information Act requires disclosure of these records.

2. A record from this system of records may be disclosed, as a routine use, in the course of presenting evidence to a court, magistrate, or administrative tribunal, including disclosures to opposing counsel in the course of settlement negotiations.

3. A record in this system of records may be disclosed, as a routine use, to a Member of Congress submitting a request involving an individual, to whom the record pertains, when the individual has requested assistance from the Member with respect to the subject matter of the record.

4. A record in this system of records may be disclosed, as a routine use, to a contractor of the Agency having need for the information in order to perform a contract. Recipients of information shall be required to comply with the requirements of the Privacy Act of 1974, as amended, pursuant to 5 U.S.C. 552a(m).

5. A record related to an International Application filed under the Patent Cooperation Treaty in this system of records may be disclosed, as a routine use, to the International Bureau of the World Intellectual Property Organization, pursuant to the Patent Cooperation Treaty.

6. A record in this system of records may be disclosed, as a routine use, to another federal agency for purposes of National Security review (35 U.S.C. 181) and for review pursuant to the Atomic Energy Act (42 U.S.C. 218(c)).

7. A record from this system of records may be disclosed, as a routine use, to the Administrator, General Services, or his/her designee, during an inspection of records conducted by GSA as part of that agency's responsibility to recommend improvements in records management practices and programs, under authority of 44 U.S.C. 2904 and 2906. Such disclosure shall be made in accordance with the GSA regulations governing inspection of records for this purpose, and any other relevant (i.e., GSA or Commerce) directive. Such disclosure shall not be used to make determinations about individuals.

8. A record from this system of records may be disclosed, as a routine use, to the public after either publication of the application pursuant to 35 U.S.C. 122(b) or issuance of a patent pursuant to 35 U.S.C. 151. Further, a record may be disclosed, subject to the limitations of 37 CFR 1.14, as a routine use, to the public if the record was filed in an application which became abandoned or in which the proceedings were terminated and which application is referenced by either a published application, an application open to public inspections or an issued patent.

9. A record from this system of records may be disclosed, as a routine use, to a Federal, State, or local law enforcement agency, if the USPTO becomes aware of a violation or potential violation of law or regulation.

UNITED STATES PATENT AND TRADEMARK OFFICE

Commissioner for Patents
United States Patent and Trademark Office
P.O. Box 1450
Alexandria, VA 22313-1450
www.uspto.gov

OHLANDT, GREELEY, RUGGIERO & PERLE, LLP
ONE LANDMARK SQUARE, 10TH FLOOR
STAMFORD CT 06901

MAILED
OCT 22 2010
OFFICE OF PETITIONS

In re Application of	:	
Guy LA TORRE et al.	:	
Application No. 09/488,202	:	NOTICE UNDER 37 CFR. 1.28(c)
Filed: January 19, 2000	:	
Attorney Docket No. 0005983USU/4265	:	

This is a notice regarding your request for acceptance of a fee deficiency submission under 37 CFR 1.28. On September 1, 1998, the Court of Appeals for the Federal Circuit held that 37 CFR 1.28(c) is the sole provision governing the time for correction of the erroneous payment of the issue fee as a small entity. **See DH Technology v. Synergystex International, Inc. 154 F.3d 1333, 47 USPQ2d 1865 (Fed. Cir. Sept. 1, 1998).**

The Office no longer investigates or rejects original or reissue applications under 37 CFR 1.56. **1098 Off. Gaz. Pat. Office 502 (January 3, 1989)**. Therefore, nothing in this Notice is intended to imply that an investigation was done.

Your fee deficiency submission under 37 CFR 1.28 is hereby **NOT ACCEPTED**.

The statement of delay is not acceptable. In this regard, petitioner's attention is directed to 37 CFR 1.33(b), which states.

> (b) Amendments and other papers. Amendments and other papers, except for written assertions pursuant to § 1.27(c)(2)(ii) of this part, filed in the application must be signed by:
> (1) A registered patent attorney or patent agent of record appointed in compliance with § 1.32(b);
> (2) A registered patent attorney or patent agent not of record who acts in a representative capacity under the provisions of § 1.34;
> (3) An assignee as provided for under §3.71(b) of this chapter; or
> (4) All of the applicants (§ 1.41(b)) for patent, unless there is an assignee of the entire interest and such assignee has taken action in the application in accordance with § 3.71 of this chapter.

37 CFR 3.71(c) states:

An assignee becomes of record either in a national patent application or a reexamination proceeding by filing a statement in compliance with § 3.73(b) that is signed by a party who is authorized to act on behalf of the assignee.

The itemization must be provided within one (1) month from the date of this decision to avoid the return of the deficiency.

Inquiries related to this communication should be directed to Michelle R. Eason at (571) 272-4231.

Thurman K. Page
Petitions Examiner
Office of Petitions

Cc: **A J PEACH**
DENNEMEYER & CO STOCKPORT
REGENT HOUSE, HEATON LANE
STOCKPORT, CHESHIRE
ENGLAN SK4 1BB

UNITED STATES PATENT AND TRADEMARK OFFICE

Commissioner for Patents
United States Patent and Trademark Office
P.O. Box 1450
Alexandria, VA 22313-1450
www.uspto.gov

OHLANDT, GREELEY, RUGGIERO & PERLE, LLP
ONE LANDMARK SQUARE, 10TH FLOOR
STAMFORD CT 06901

MAILED

MAY 09 2011

OFFICE OF PETITIONS

In re Application of :
Guy LATORRE et al. :
Application No. 09/488,202 : NOTICE UNDER 37 CFR. 1.28(c)
Patent No. 6,517,863 :
Filed: January 19, 2000 :
Attorney Docket No. 0005983USU/4265

This is a notice regarding your request for acceptance of a fee deficiency submission under 37 CFR 1.28.

The Office no longer investigates or rejects original or reissue patent under 37 CFR 1.56. **1098 Off. Gaz. Pat. Office 502 (January 3, 1989)**. Therefore, nothing in this Notice is intended to imply that an investigation was done.

Your fee deficiency submission under 37 CFR 1.28 is hereby **ACCEPTED**.

This patent is no longer entitled to small entity status. Accordingly, all future fees paid in this patent must be paid at the large entity rate.

Inquiries related to this communication should be directed to Michelle R. Eason at (571) 272-4231.

Thurman K. Page
Petitions Examiner
Office of Petitions

UNITED STATES PATENT AND TRADEMARK OFFICE

Commissioner for Patents
United States Patent and Trademark Office
P.O. Box 1450
Alexandria, VA 22313-1450
www.uspto.gov

MAILED

MAR 04 2011

OFFICE OF PETITIONS

FAY SHARPE LLP
1228 Euclid Avenue, 5th Floor
The Halle Building
Cleveland OH 44115

In re Application of :
Keresman et al. :
Application No. 09/488,297 :
Filed: January 20, 2000 : DECISION ON PETITION
Attorney Docket No. PRAZ 200001US01 :
For: SECURE AND EFFICIENT PAYMENT :
PROCESSING SYSTEM :
:

The above-identified application has been forwarded to the undersigned for consideration on a petition for patent term extension entitled "Petition under 37 CFR 1.181 to Correct Patent Term Extension," received on July 9, 2010. The petition is being treated under 37 CFR 1.181 and 37 CFR 1.701, as a petition for patent term extension.

The petition is dismissed.

Petitioner asserts that the Notice of Allowance mailed by the Office on March 15, 2010 is incorrect, as it states that the application is only eligible for 682 days of patent term extension. Petitioner asserts that the application is eligible for patent term extension based on a first Notice of Appeal filed on July 14, 2005 to the date of the Decision in favor of applicants, January 21, 2010. Petitioner asserts that the patent term extension was improperly calculated from March 11, 2008, the date of the second notice of appeal to January 21, 2010, the date of the decision in favor of applicants.

Petitioner argues that the Examiner reopened prosecution in an Office Action mailed on December 14, 2006 in response to his Appeal Brief and that the Applicants were not given an opportunity to take the case to the BPAI based on the original appeal brief. Petitioner states that he filed a response to the Office Action with no claim amendments. Petitioner asserts that in response to a Final Office Action mailed on September 7, 2007, a second Notice of Appeal was filed on March 11, 2008. Petitioner argues that no further amendments were submitted after the

original Notice of Appeal, which was filed on July 14, 2005. Petitioner argues that the patent term extension should be calculated from July 14, 2005 to January 21, 2010.

On January 20, 2000, the above identified application was received by the Office.

On July 14, 2005, a Notice of Appeal was received by the Office.

On December 14, 2006, prosecution was reopened by the Examiner.

On June 20, 2007, Applicant elected to file a reply under 37 CFR 1.111.

On September 7, 2007, a Final Rejection was mailed by the Office.

On March 11, 2008, a Notice of Appeal was received by the Office.

On January 21, 2010, a Decision by the BPAI affirming in part the decision of the Examiner was mailed by the Office.

On April 27, 2010, a Notice of Allowance and Issue Fee(s) Due notice, which included a determination that the patent term extension was 682 days, was mailed by the Office.

Applicable Statutes and Regulation

35 U.S.C. 154. Contents and term of patent (in effect on June 8, 1995)

(b) TERM EXTENSION.-

(1) INTERFERENCE DELAY OR SECRECY ORDERS.-If the issue of an original patent is delayed due to a proceeding under section 135(a) of this title, or because the application for patent is placed under an order pursuant to section 181 of this title, the term of the patent shall be extended for the period of delay, but in no case more than 5 years.

(2) EXTENSION FOR APPELLATE REVIEW.-If the issue of a patent is delayed due to appellate review by the Board of Patent Appeals and Interferences or by a Federal court and the patent is issued pursuant to a decision in the review reversing an adverse determination of patentability, the term of the patent shall be extended for a period of time but in no case more than 5 years. A patent shall not be eligible for extension under this paragraph if it is subject to a terminal disclaimer due to the issue of another patent claiming subject matter that is not patentably distinct from that under appellate review.

37 CFR 1.701 Extension of patent term due to examination delay under the Uruguay Round Agreements Act (original applications, other than designs, filed on or after June 8, 1995, and before May 29, 2000).

(a) A patent, other than for designs, issued on an application filed on or after June 8, 1995, is entitled to extension of the patent term if the issuance of the patent was delayed due to:

(1) Interference proceedings under 35 U.S.C. 135(a); and/or

(2) The application being placed under a secrecy order under 35 U.S.C. 181; and/or

(3) Appellate review by the Board of Patent Appeals and Interferences or by a Federal court under 35 U.S.C. 141 or 145, if the patent was issued pursuant to a decision in the review reversing an adverse determination of patentability and if the patent is not subject to a terminal disclaimer due to the issuance of another patent claiming subject matter that is not patentably distinct from that under appellate review. If an application is remanded by a panel of the Board of Patent Appeals and Interferences and the remand is the last action by a panel of the Board of Patent Appeals and Interferences prior to the mailing of a notice of allowance under 35 U.S.C. 151 in the application, the remand shall be considered a decision in the review reversing an adverse determination of patentability as that phrase is used in 35 U.S.C. 154(b)(2) as amended by section 532(a) of the Uruguay Round Agreements Act, Public Law 103-465, 108 Stat. 4809, 4983-85 (1994), and a final decision in favor of the applicant under paragraph (c)(3) of this section. A remand by a panel of the Board of Patent Appeals and Interferences shall not be considered a decision in the review reversing an adverse determination of patentability as provided in this paragraph if there is filed a request for continued examination under 35 U.S.C. 132(b) that was not first preceded by the mailing, after such remand, of at least one of an action under 35 U.S.C. 132 or a notice of allowance under 35 U.S.C. 151.

(b) The term of a patent entitled to extension under paragraph (a) of this section shall be extended for the sum of the periods of delay calculated under paragraphs (c)(1), (c)(2), (c)(3) and (d) of this section, to the extent that these periods are not overlapping, up to a maximum of five years. The extension will run from the expiration date of the patent.

(c)(1) The period of delay under paragraph (a)(1) of this section for an application is the sum of the following periods, to the extent that the periods are not overlapping:

(i) With respect to each interference in which the application was involved, the number of days, if any, in the period beginning on the date the interference was declared or redeclared to involve the application in the interference and ending on the date that the interference was terminated with respect to the application; and

(ii) The number of days, if any, in the period beginning on the date prosecution in the application was suspended by the Patent and Trademark Office due to interference proceedings under 35 U.S.C. 135(a) not involving the application and ending on the date of the termination of the suspension.

(2) The period of delay under paragraph (a)(2) of this section for an application is the sum of the following periods, to the extent that the periods are not overlapping:

(i) The number of days, if any, the application was maintained in a sealed condition under 35 U.S.C. 181;

(ii) The number of days, if any, in the period beginning on the date of mailing of an examiner's answer under § 41.39 of this title in the application under secrecy order and ending on the date the secrecy order and any renewal thereof was removed;

(iii) The number of days, if any, in the period beginning on the date applicant was notified that an interference would be declared but for the secrecy order and ending on the date the secrecy order and any renewal thereof was removed; and

(iv) The number of days, if any, in the period beginning on the date of notification under § 5.3(c) and ending on the date of mailing of the notice of allowance under § 1.311.

(3) The period of delay under paragraph (a)(3) of this section is the sum of the number of days, if any, in the period beginning on the date on which an appeal to the Board of Patent Appeals and Interferences was filed under 35 U.S.C. 134 and ending on the date of a final decision in favor of the applicant by the Board of Patent Appeals and Interferences or by a Federal court in an appeal under 35 U.S.C. 141 or a civil action under 35 U.S.C. 145.

(d) The period of delay set forth in paragraph (c)(3) shall be reduced by:

(1) Any time during the period of appellate review that occurred before three years from the filing of the first national application for patent presented for examination; and

(2) Any time during the period of appellate review, as determined by the Director, during which the applicant for patent did not act with due diligence. In determining the due diligence of an applicant, the Director may examine the facts and circumstances of the applicant's actions during the period of appellate review to determine whether the applicant exhibited that degree of timeliness as may reasonably be expected from, and which is ordinarily exercised by, a person during a period of appellate review.

(e) The provisions of this section apply only to original patents, except for design patents, issued on applications filed on or after June 8, 1995, and before May 29, 2000.

Opinion

The patent statute only permits extension of patent term based on very specific criteria. The Office has no authority to grant any extension or adjustment of the term due to administrative delays except as authorized by 35 U.S.C. § 154. 35 U.S.C. § 154 provides for patent term extension for appellate review, interference and secrecy order delays in utility and plant applications filed on or after June 8, 1995, and, as amended by the "American Inventors Protection Act of 1999," enacted November 29, 1999, as part of Public Law 106-113, for other specifically defined administrative delays in utility and plant applications filed on or after May 29, 2000.

The above-identified application was filed on January 20, 2000. Accordingly it is entitled to patent term extension based upon the conditions in 35 U.S.C. § 154(b), in effect on June 8, 1995. The provisions of 35 U.S.C. § 154(b) in effect on May 29, 2000 do not apply, because the amended version of 35 U.S.C. § 154(b) only applies to applications filed on or after May 29, 2000. Pursuant to 35 U.S.C. § 154(b), in effect on June 8, 1995, an applicant can receive patent term extension only if there was an appellate review, interference or a secrecy order delays as set forth in the statute.

The Notice of Allowance and Issue Fee(s) Due Notice included a determination that the patent term extension was 682 days for the period from March 11, 2008, the date that the second Notice of Appeal was filed and ending January 21, 2010, the date of the decision by the BPAI, which is a final decision in favor of the applicant. Petitioner's argument that he is entitled to additional patent term extension for the period from July 14, 2005, the date of receipt of the first Notice of Appeal to March 11, 2008, the date of receipt of the second Notice of Appeal is not persuasive.

A Notice of Appeal was filed in the above-identified application on July 14, 2005. In response to Applicant's Appeal Brief, on December 14, 2006, the Examiner reopened prosecution and set forth a new grounds of rejection and gave Applicant the option of either:

(1) File a reply under 37 CFR 1.111 (if this office action is non-final) or a reply under 37 CFR 1.113 (if this office action is final); or,

(2) Initiate a new appeal by filing a notice of appeal under 37 CFR 41.31 followed by an appeal brief under 37 CFR 41.37. The previously paid notice of appeal fees and appeal brief fee can be applied to the new appeal. If, however, the appeal fees set forth in the 37 CFR 41.20 have been increased since they were previously paid, then the appellant must pay the difference between the increased fees and the amount previously paid.

Petitioner's argument that he was not given the option of simply taking the case to the BPAI on the original appeal brief and thus he is entitled to patent term extension for the period from the first filed notice of appeal to the date of the decision by the BPAI is not persuasive. Petitioner was given the option of filing a reply under 37 CFR 1.111 or proceeding to the BPAI by initiating a new appeal followed by an appeal brief. Petitioner did not elect to proceed to the BPAI by filing a new notice of appeal followed by an appeal brief, but elected to file a response pursuant to 37 CFR 1.111. While petitioner now asserts that he did not file any amendments in the further prosecution of the application, he could have filed amendments and he elected to further prosecute the application. Since Petitioner elected to continue prosecuting the application in response to the Examiner's new ground of rejection instead of proceeding to the BPAI, his argument that he is now entitled to patent term extension based on the date of the first notice of appeal to the date of the decision by the BPAI is not persuasive.

The Office has no authority to grant an extension of the term due to administrative delays except as authorized by 35 U.S.C. § 154.

Petitioner's deposit account has not been charged a petition fee.

Telephone inquiries with regard to this communication should be directed to Mark O. Polutta at (571) 272-7709.

Mark Polutta
Senior Legal Advisor
Office of Patent Legal Administration
Office of the Deputy Commissioner
for Patent Examination Policy

UNITED STATES PATENT AND TRADEMARK OFFICE

Commissioner for Patents
United States Patent and Trademark Office
P.O. Box 1450
Alexandria, VA 22313-1450
www.uspto.gov

In re Patent No. 6318661
Issue Date: November 20,2001
Application No. 09488409
Filed: January 19,2000
Attorney Docket No. BG-9941-1

:
:DECISION GRANTING PETITION
:UNDER 37 CFR 1.378(c)
:

This is a decision on the electronic petition, filed August 30,2011 ,under 37 CFR 1.378(c) to accept the unintentionally delayed payment of the 7.5 year maintenance fee for the above-identified patent.

The petition is **GRANTED**.

The maintenance fee is accepted, and the above-identified patent reinstated as of August 30,2011 . This decision also constitutes notice that the fee has been accepted. An electronic copy of the petition and this decision has been created as an entry in the Image File Wrapper. Nevertheless, petitioner should print and retain an independent copy.

Telephone inquiries related to this electronic decision should be directed to the Electronic Business Center at 1-866-217-9197.

PTO/SB/66 (03-09)
Approved for use through 03/31/2012. OMB 0651-0016
U.S. Patent and Trademark Office: U.S. DEPARTMENT OF COMMERCE
Under the Paperwork Reduction Act of 1995, no persons are required to respond to a collection of information unless it displays valid OMB control number.

PETITION TO ACCEPT UNINTENTIONALLY DELAYED PAYMENT OF MAINTENANCE FEE IN AN EXPIRED PATENT (37 CFR 1.378(c))

Patent Number	Issue Date (YYYY-MM-DD)	Application Number	Filing Date (YYYY-MM-DD)	Docket Number (if applicable)
6,318,661	2001-11-20	09/488,409	2000-01-19	014979-000165

CAUTION: Maintenance fee (and surcharge, if any) payment must correctly identify: (1) the patent number and (2) the application number of the actual U.S. application leading to issuance of that patent to ensure the fee(s) is/are associated with the correct patent. 37 CFR 1.366(c) and (d).

SMALL ENTITY

☐ Patentee claims, or has previously claimed, small entity status. See 37 CFR 1.27.

LOSS OF ENTITLEMENT TO SMALL ENTITY STATUS

☐ Patentee is no longer entitled to small entity status. See 37 CFR 1.27(g)

NOT Small Entity			Small Entity		
	Fee	Code		Fee	Code
○	3 ½ year	(1551)	○	3 ½ year	(2551)
◉	7 ½ year	(1552)	○	7 ½ year	(2552)
○	11 ½ year	(1553)	○	11 ½ year	(2553)

SURCHARGE

The surcharge required by 37 CFR 1.20(i)(2) (Fee Code 1558) must be paid as a condition of accepting unintentionally delayed payment of the maintenance fee.

MAINTENANCE FEE (37 CFR 1.20(e)-(g))

The appropriate maintenance fee must be submitted with this petition.

STATEMENT

THE UNDERSIGNED CERTIFIES THAT THE DELAY IN PAYMENT OF THE MAINTENANCE FEE TO THIS PATENT WAS UNINTENTIONAL

PETITIONER(S) REQUEST THAT THE DELAYED PAYMENT OF THE MAINTENANCE FEE BE ACCEPTED AND THE PATENT REINSTATED

THIS PORTION MUST BE COMPLETED BY THE SIGNATORY OR SIGNATORIES

37 CFR 1.378(d) states: "Any petition under this section must be signed by an attorney or agent registered to practice before the Patent and Trademark Office, or by the patentee, the assignee, or other party in interest."

I certify, in accordance with 37 CFR 1.4(d)(4) that I am

◉ An attorney or agent registered to practice before the Patent and Trademark Office

○ A sole patentee

○ A joint patentee; I certify that I am authorized to sign this submission on behalf of all the other patentees.

○ A joint patentee; all of whom are signing this e-petition

○ The assignee of record of the entire interest

PTO/SB/66 (03-09)
Approved for use through 03/31/2012. OMB 0651-0016
U.S. Patent and Trademark Office: U.S. DEPARTMENT OF COMMERCE
Under the Paperwork Reduction Act of 1995, no persons are required to respond to a collection of information unless it displays valid OMB control number.

Patent Practitioner			
A signature of the applicant or representative is required in accordance with 37 CFR 1.33 and 10.18. Please see 37 CFR 1.4(d) for the form of the signature			
Signature	/dennis j. williamson/	Date (YYYY-MM-DD)	2011-08-30
Name	Dennis J. Williamson	Registration Number	32338

This collection of information is required by 37 CFR 1.378(c). The information is required to obtain or retain a benefit by the public which is to file (and by the USPTO to process) an application. Confidentiality is governed by 35 U.S.C. 122 and 37 CFR 1.11 and 1.14. This collection is estimated to take 1 hour to complete, including gathering, preparing, and submitting the completed application form to the USPTO. Time will vary depending upon the individual case. Any comments on the amount of time you require to complete this form and/ or suggestions for reducing this burden, should be sent to the Chief Information Officer, U.S. Patent and Trademark Office, U.S. Department of Commerce, P.O. Box 1450, Alexandria, VA 22313-1450. DO NOT SEND FEES OR COMPLETED FORMS TO THIS ADDRESS. **This form can only be used when in conjunction with EFS-Web. If this form is mailed to the USPTO, it may cause delays in reinstating the patent.**

Privacy Act Statement

The Privacy Act of 1974 (P.L. 93-579) requires that you be given certain information in connection with your submission of the attached form related to a patent application or patent. Accordingly, pursuant to the requirements of the Act, please be advised that: (1) the general authority for the collection of this information is 35 U.S.C. 2(b)(2); (2) furnishing of the information solicited is voluntary; and (3) the principal purpose for which the information is used by the U.S. Patent and Trademark Office is to process and/or examine your submission related to a patent application or patent. If you do not furnish the requested information, the U.S. Patent and Trademark Office may not be able to process and/or examine your submission, which may result in termination of proceedings or abandonment of the application or expiration of the patent.

The information provided by you in this form will be subject to the following routine uses:

1. The information on this form will be treated confidentially to the extent allowed under the Freedom of Information Act (5 U.S.C. 552) and the Privacy Act (5 U.S.C. 552a). Records from this system of records may be disclosed to the Department of Justice to determine whether the Freedom of Information Act requires disclosure of these records.

2. A record from this system of records may be disclosed, as a routine use, in the course of presenting evidence to a court, magistrate, or administrative tribunal, including disclosures to opposing counsel in the course of settlement negotiations.

3. A record in this system of records may be disclosed, as a routine use, to a Member of Congress submitting a request involving an individual, to whom the record pertains, when the individual has requested assistance from the Member with respect to the subject matter of the record.

4. A record in this system of records may be disclosed, as a routine use, to a contractor of the Agency having need for the information in order to perform a contract. Recipients of information shall be required to comply with the requirements of the Privacy Act of 1974, as amended, pursuant to 5 U.S.C. 552a(m).

5. A record related to an International Application filed under the Patent Cooperation Treaty in this system of records may be disclosed, as a routine use, to the International Bureau of the World Intellectual Property Organization, pursuant to the Patent Cooperation Treaty.

6. A record in this system of records may be disclosed, as a routine use, to another federal agency for purposes of National Security review (35 U.S.C. 181) and for review pursuant to the Atomic Energy Act (42 U.S.C. 218(c)).

7. A record from this system of records may be disclosed, as a routine use, to the Administrator, General Services, or his/her designee, during an inspection of records conducted by GSA as part of that agency's responsibility to recommend improvements in records management practices and programs, under authority of 44 U.S.C. 2904 and 2906. Such disclosure shall be made in accordance with the GSA regulations governing inspection of records for this purpose, and any other relevant (i.e., GSA or Commerce) directive. Such disclosure shall not be used to make determinations about individuals.

8. A record from this system of records may be disclosed, as a routine use, to the public after either publication of the application pursuant to 35 U.S.C. 122(b) or issuance of a patent pursuant to 35 U.S.C. 151. Further, a record may be disclosed, subject to the limitations of 37 CFR 1.14, as a routine use, to the public if the record was filed in an application which became abandoned or in which the proceedings were terminated and which application is referenced by either a published application, an application open to public inspections or an issued patent.

9. A record from this system of records may be disclosed, as a routine use, to a Federal, State, or local law enforcement agency, if the USPTO becomes aware of a violation or potential violation of law or regulation.